Applicable Codes

2015 International Building Code (IBC)
2015 International Residential Code (IRC)
2015 International Energy Conservation Code (IECC)
W/ Washington State Amendments

2015 IECC Energy Code Information

All Climate Zones	R-Value (A)	U-Factor (A)
Fenestration U-Factor (B)	N/A	0.30
Skylight U-Factor	N/A	0.50
Glazed Fenestration SHGC (B,E)	N/A	N/A
Ceilng	49 (J)	0.026
Wood Frame Wall (G,K,L)	21 INT	0.056
Mass Wall R-Value (I)	21/21 (H)	0.056
Floor	30 (G)	0.029
Below Grade Wall (C,K)	10/15/21 INT+TB	0.042
Slab (D) R-Value & Depth	10, 2ft	N/A

A) R-values are minimums. U-factors and SHGC are maximums. When insulation is installed in a cavity which is less than the label or design thickness of the insulation, the compressed R-value of the insulation from Appendix Table A101.4 shall not be less than the R-value specified in the table.

B) The fenestration U-factor column excludes skylights. The SHGC column applies to all glazed fenestration. Exception: Skylights may be excluded from glazed fenestration SHGC requirements in Climate Zones 1 through 3 where the SHGC for such skylights does not exceed 0.30.

C) "10/15/21.+TB" means R-10 continuous insulation on the exterior of the wall, or R-15 on the continuous insulation on the interior of the wall, or R-21 cavity insulation plus a thermal break between the slab and the basement wall at the interior of the basement wall. "10/15/21.+TB" shall be permitted to be met with R-13 cavity insulation on the interior of the basement wall plus R-5 continuous insulation on the interior or exterior of the wall. "10/13" means R-10 continuous insulation on the interior or exterior of the home or R-13 cavity insulation at the interior of the basement wall. "TB" means thermal break between floor slab and basement wall.

D) R-10 continuous insulation is required under heated slab on grade floors. See R402.2.9.1.

E) There are no SHGC requirements in the Marine Zone.

F) Reserved.

G) Reserved.

H) Reserved.

I) The second R-value applies when more than half the insulation is on the interior of the mass wall.

J) Reserved.

K) For Single Rafter or Joist Vaulted Ceilings, the Insulation may be reduced to R-38.

L) Reserved.

M) Int. (intermediate framing) denotes standard framing 16 inches on center with headers insulated with a minimum of R-10 insulation.

Table R402.1.3 Footnote A) Nonfenestration U-factors shall be obtained from measurement, calculation or an approved source or as specified in Section R402.1.3.

Below are the Chosen Options for the 2015 Energy Code

Option	Description	Credit(s)
1A	Efficient Building Envelope 1A: Prescriptive Compliance is based on Table R402.1.1 with the following modifications: Fenestration U: 0.28 Floor: R-38 Slab on Grade: R-10 Perimeter and Under Entire Slab Below Grade Slab: R-10 Perimeter and Under Entire Slab or Compliance Based on Section R402.1.4: Reduce Total UA by 5%	0.5
3B	HIGH EFFICIENCY HVAC EQUIPMENT 3B: Air-source heat pump with minimum HSPF of 9.0 To qualify to claim this credit, the building permit drawings shall specify the option being selected and shall specify the heating equipment type and the minimum equipment efficiency	1.0
5A	EFFICIENT WATER HEATING 5A: All showerhead and kitchen sink faucets installed in the house shall be rated at 1.75 GPM or less. All other lavatory faucets shall be rated at 1.0 GPM or less. To qualify to claim this credit, the building permit drawings shall specify the option being selected and shall specify the maximum flow rates for all showerheads, kitchen sink faucets, and other lavatory faucets	0.5
5C	EFFICIENT WATER HEATING 5C: Water heating system shall include one of the following: Gas, propane or oil water heater with a minimum EF of 0.91 or Solar water heating supplementing a minimum standard water heater. Solar water heating will provide a rated minimum savings of 85 therms or 2000 kWh based on the Solar Rating and Certification Corporation (SRCC) Annual Performance of OG-300 Certified Solar Water Heating Systems or Electric heat pump water heater with a minimum EF of 2.0 and meeting the standards of NEEA's Northern Climate Specifications for Heat Pump Water Heaters To qualify to claim this credit, the building permit drawings shall specify the option being selected and shall specify the water heater equipment type and the minimum equipment efficiency and, for solar water heating systems, the calculation of the minimum energy savings	1.5

Drafting Manager:
Gabe Spruell
Pacific Home Source
4001 72nd St. E.
Tacoma, WA 98443
253.312.5523

Customer:

Farris, Rich & Kathy
2345 West Stewart
Puyallup, WA 98371
253-255-3413
Parcel # - 0420207029

Design Criteria & Loads

Roof Snow Load:	25 psf
Floor Live Load:	40 psf
Wind Speed (ASD):	85 mph
Wind Speed (ULT):	100 mph
Exposure:	B
Seismic Zone:	D
Frost Depth:	18"

Address MUST be located on the house where it is easily seen from the main access road (Homeowner Responsibility).

See Geotechnical Report Migizi group April 21, 2016 for soil preparations. Excerpt below from pg 9 of 14. Observation by the geotechnical engineer is required per recommendations on 12 of 14 of the geotechnical report.

4.2 Spread Footings

In our opinion, conventional spread footings will provide adequate support for the residences if the subgrades are properly prepared. Due to the soft soils underlying the site, over-excavation of spread footing subgrades, to a depth of 3 feet, and the construction of structural fill bearing pads will be necessary for foundation support of the new structure.

Footing Depths and Widths: For frost and erosion protection, the bases of all exterior footings should bear at least 18 inches below adjacent outside grades, whereas the bases of interior footings need bear only 12 inches below the surrounding slab surface level. To reduce post-construction settlements, continuous (wall) and isolated (column) footings should be at least 16 and 24 inches wide, respectively.

Bearing Subgrades: Structural fill bearing pads, 3 feet thick and compacted to a density of at least 95 percent (based on ASTM:D-1557), should underlie spread footings on this site. Given the fact that the over-excavation will likely extend below the water table, we recommend that the bottom 12 inches of the bearing pads consist of 2-4 inch quarry spalls driven into the subgrade using a hoe pack.

In general, before footing concrete is placed, any localized zones of loose soils exposed across the footing subgrades should be compacted to a firm, unyielding condition, and any localized zones of soft, organic, or debris-laden soils should be overexcavated and replaced with suitable structural fill.

Lateral Overexcavations: Because foundation stresses are transferred outward as well as downward into the bearing soils, all structural fill placed under footings, should extend horizontally outward from the edge of each footing. This horizontal distance should be equal to the depth of placed fill. Therefore, placed fill that extends 3 feet below the footing base should also extend 3 feet outward from the footing edges.

Area Summary

Main Floor:	1,500 Sq. Ft.
Upper Floor:	2,500 Sq. Ft.
Conditioned Area:	4,000 Sq. Ft.
Garage Area:	780 Sq. Ft.
Covered Driveway:	420 Sq. Ft
Covered Front Porch:	500 Sq. Ft.
Covered Patio:	500 Sq. Ft.
Total Area:	6,200 Sq. Ft.

3D Isometric Drawings are for illustration ONLY! Plans, Details and Engineering take presidence over ANY 3D drawing within this plan.

Sheet Index

Pg #	Title
1	Cover Sheet
2	Elevations
3	Elevations
4	Main Floor
5	Upper Floor
6	Foundation & Framing
7	Upper Floor Framing
8	Roof Framing
9	Cross Sections
10	Details
11	Details Continued
12	General Notes

PACIFIC HOME SOURCE LLC
Gabe Spruell
Ph: 253.312.5523
4001 72nd St. E.
Tacoma, WA 98443

Farris, Rich & Kathy
2345 West Stewart
Puyallup, WA 98371
253-255-3413
Parcel # - 0420207029

--These plans are exclusive property of Pacific Home Source (PHS) and may not be sold to any person or business without expressed written consent of PHS. These plans are for one (1) time use only for PHS's customer - Farris, Rich & Kathy and to be built on the customer's site at 2345 West Stewart St. Puyallup, WA 98371.
--NOTICE: DO NOT SCALE: The written dimensions on this plan supersede any scaled measurements.
--Copyright notice: these plans are copyrighted and are subject to copyright protection as an "architectural work" under sec. 102 of the copyright act, 17 USC as amended December 1990. The protection includes but is not limited to the overall form as well as the arrangement and composition of spaces and elements of design. Under such protection, any unauthorized use of these plans, the design in whole or part, can legally result in monetary compensation to PHS. Written dimensions on these plans shall take precedence over scaled measurements.
--Any variations from conditions and dimensions shown on the drawing shall be reported to the designer for resolution prior to proceeding with the work, otherwise the contractor shall be solely responsible for costs of any necessary remedial work.

Cover Sheet

PHS Job #: 19.056

Printed On: 6/7/2023 10:39:08

Layout Sheet # 1 of 12

Sheet: **1**

South
Scale: 1/4 in = 1 ft

West
Scale: 1/4 in = 1 ft

PACIFIC HOME SOURCE LLC
Gabe Spruell
Ph: 253.312.5523
4001 72nd St. E.
Tacoma, WA 98443

Farris, Rich & Kathy
2345 West Stewart
Puyallup, WA 98371
253-255-3413
Parcel # - 0420207029

--These plans are exclusive property of Pacific Home Source (PHS) and may not be sold to any person or business without expressed written consent of PHS. These plans are for one (1) time use only for PHS's customer - Farris, Rich & Kathy and to be built on the customer's site at 2345 West Stewart in Puyallup, WA 98371.
--NOTICE: DO NOT SCALE - The written dimensions on this plan supersede any scaled measurements.
--Copyright notice: these plans are copyrighted and are subject to copyright protection as an "architectural work" under sec. 102 of the copyright act, 17 USc as amended December 1990. The protection includes but is not limited to the overall form as well as the arrangement and composition of spaces and elements of design. Under such protection, any unauthorized use of these plans, the design in whole or part, can legally result in monetary damages to PHS. Written consent of PHS is required to reproduce any portion of these plans.
--Any variations from conditions and dimensions shown on the drawing shall be reported to the designer for resolution prior to proceeding with the work, otherwise the contractor shall be solely responsible for costs of any necessary remedial work.

Elevations

PHS Job #:
19.056

Printed On:
6/7/2023 10:39:09

Layout Sheet #
2 of 12

Sheet:
2

North
Scale: 1/4 in = 1 ft

East
Scale: 1/4 in = 1 ft

PACIFIC HOME SOURCE LLC
Gabe Spruell
Ph: 253.312.5523
4001 72nd St. E.
Tacoma, WA 98443

Farris, Rich & Kathy

2345 West Stewart
Puyallup, WA 98371
253-255-3413
Parcel # - 0420207029

---These plans are exclusive property of Pacific Home Source (PHS) and may not be sold to any person or business without expressed written consent of PHS. These plans are for one (1) time use only for PHS's customer - Farris, Rich & Kathy and to be built on the customer's site at 2345 West Stewart Puyallup, WA 98371.
---NOTICE: DO NOT SCALE - The written dimensions on this plan supersede any scaled measurements.
---Copyright notice: these plans are copyrighted and are subject to copyright protection as an "architectural work" under sec. 102 of the copyright act, 17 USC as amended December 1990. The protection includes but is not limited to the overall form as well as the arrangement and composition of spaces and elements of design. Under such protection, any unauthorized use of these plans, the design in whole or part, can legally result in monetary compensation to PHS. Video recordings and photographs of the work are also prohibited under the copyright act.
---Any variations from conditions and dimensions shown on the drawing shall be reported to the designer for resolution prior to proceeding with the work, otherwise the contractor shall be solely responsible for costs of any necessary remedial work.

Elevations

PHS Job #:
19.056

Printed On:
6/7/2023 10:39:09

Layout Sheet #
3 of 12

Sheet:
3

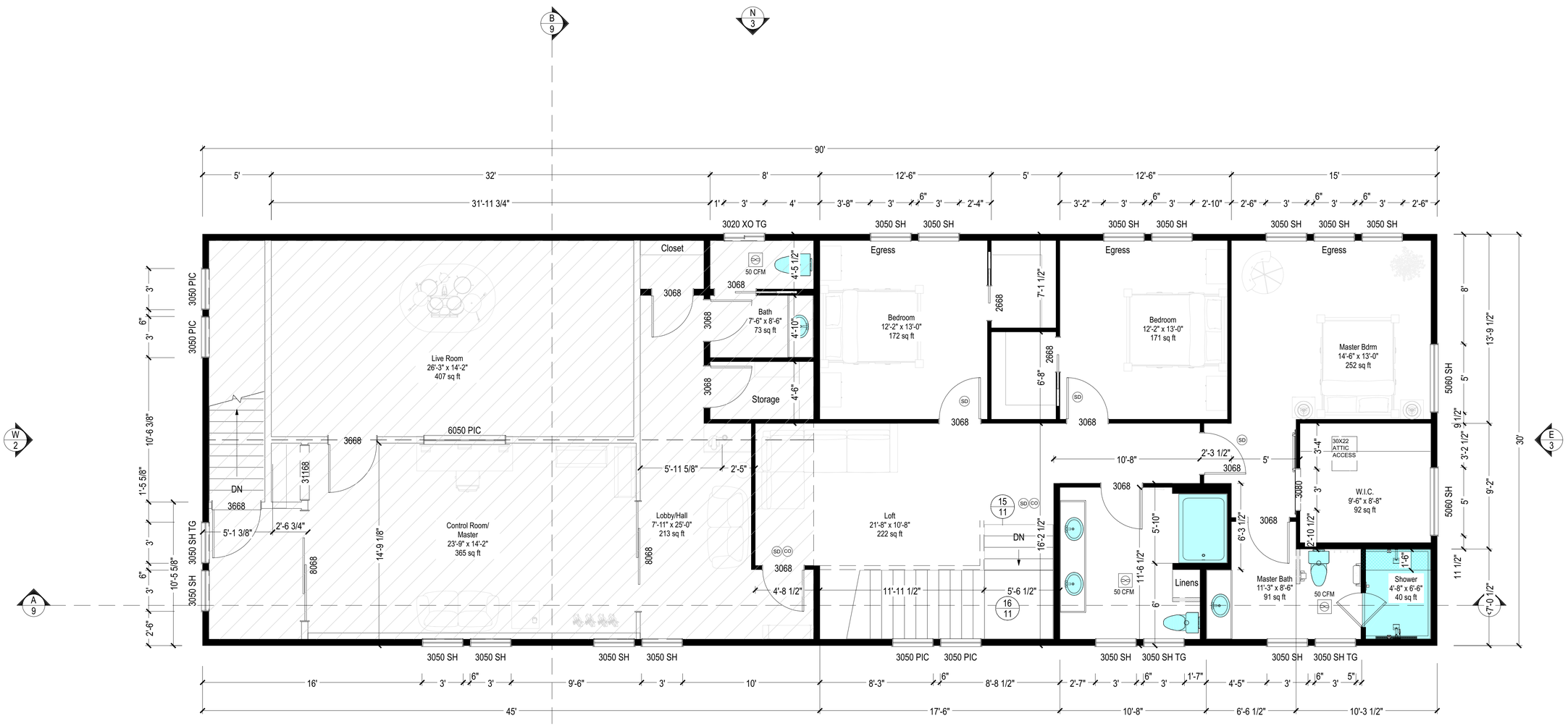

Upper Floor Plan
1/4 in = 1 ft

Safety Glass indicated as TG

First Floor plan is not inlcued in this permit set see the engineering plans for the

PACIFIC HOME SOURCE LLC
Gabe Spruell
Ph: 253.312.5523
4001 72nd St. E.
Tacoma, WA 98443

Farris, Rich & Kathy
2345 West Stewart
Puyallup, WA 98371
253-255-3413
Parcel # 0420207029

--These plans are exclusive property of Pacific Home Source (PHS) and may not be sold to any person or business without expressed written consent of PHS. These plans are for one (1) time use only for PHS's customer - Farris, Rich & Kathy and to be built on the customer's site at 2345 West Stewart Puyallup, WA 98371.
--NOTICE: DO NOT SCALE - The written dimensions on this plan supersede any scaled measurements.
--Copyright notice: these plans are copyrighted and are subject to copyright protection as an "architectural work" under sec. 102 of the copyright act, 17 USC as amended December 1990. The protection includes but is not limited to the overall form as well as the arrangement and composition of spaces and elements of design. Under such protection, any unauthorized use of these plans, the design in whole or part, can legally result in removal or correction of this work. Violators may also be subject to payment of attorney fees and other court costs.
--Any variations from conditions and dimensions shown on the drawing shall be reported to the designer for resolution prior to proceeding with the work, otherwise the contractor shall be solely responsible for costs of any necessary remedial work.

Main Floor

PHS Job #:
19.056

Printed On:
6/7/2023 10:39:09

Layout Sheet #
4 of 12

Sheet:
4

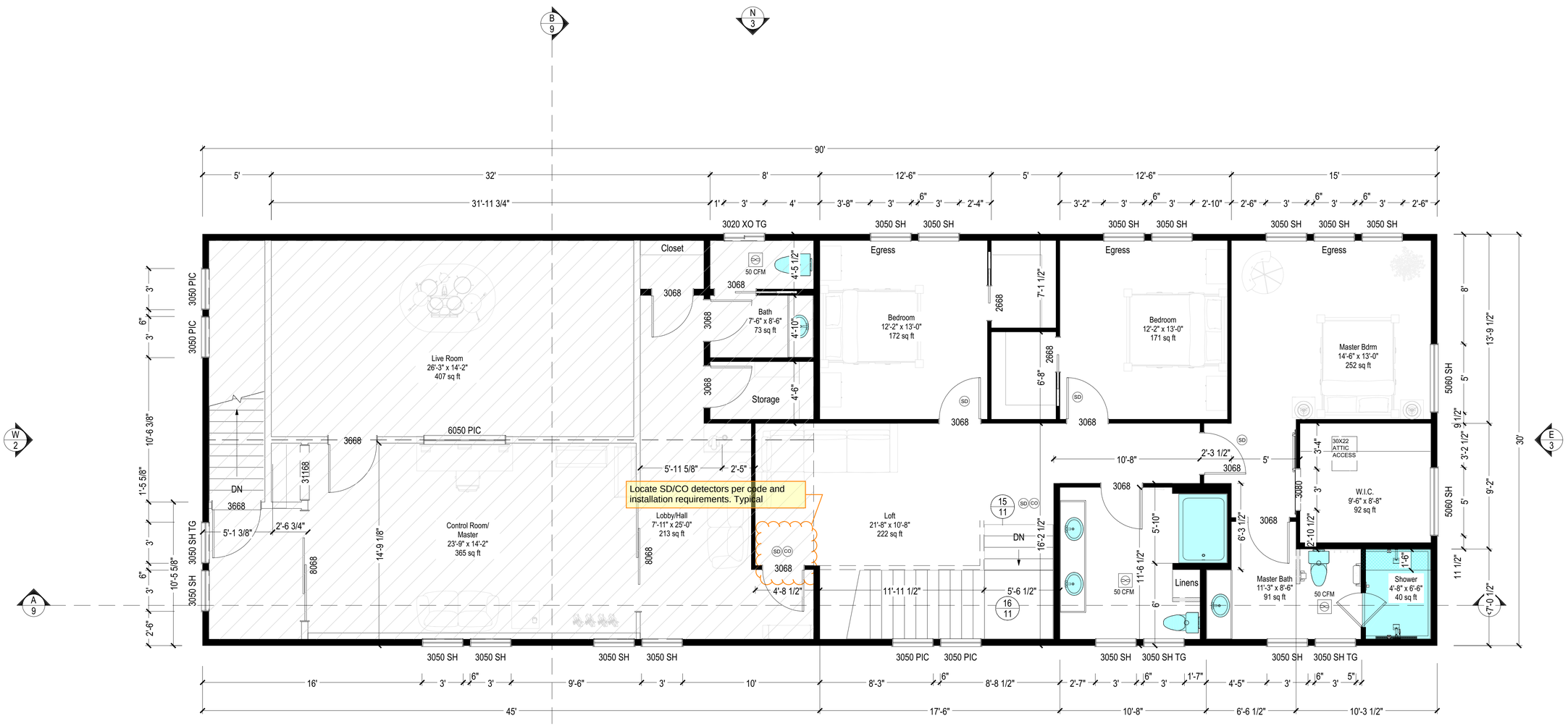

Upper Floor Plan
1/4 in = 1 ft

PACIFIC HOME SOURCE LLC
Gabe Spruell
Ph: 253.312.5523
4001 72nd St. E.
Tacoma, WA 98443

Farris, Rich & Kathy
2345 West Stewart
Puyallup, WA 98371
253-255-3413
Parcel # 0420207029

--These plans are exclusive property of Pacific Home Source (PHS) and may not be sold to any person or business without expressed written consent of PHS. These plans are for one (1) time use only for PHS's customer - Farris, Rich & Kathy and to be built on the customer's site at 2345 West Stewart, Puyallup, WA 98371.
--NOTICE: DO NOT SCALE - The written dimensions on this plan supersede any scaled measurements.
--Copyright notice: these plans are copyrighted and are subject to copyright protection as an "architectural work" under sec. 102 of the copyright act, 17 USC as amended December 1990. The protection includes but is not limited to the overall form as well as the arrangement and composition of spaces and elements of design. Under such protection, any unauthorized use of these plans, the design in whole or part, can legally result in removal or conversion of this work. Violators may also be subject to payment of attorney fees and other court costs.
--Any variations from conditions and dimensions shown on the drawing shall be reported to the designer for resolution prior to proceeding with the work, otherwise the contractor shall be solely responsible for costs of any necessary remedial work.

Upper Floor

PHS Job #:
19.056

Printed On:
6/7/2023 10:39:09

Layout Sheet #
5 of 12

Sheet:
5

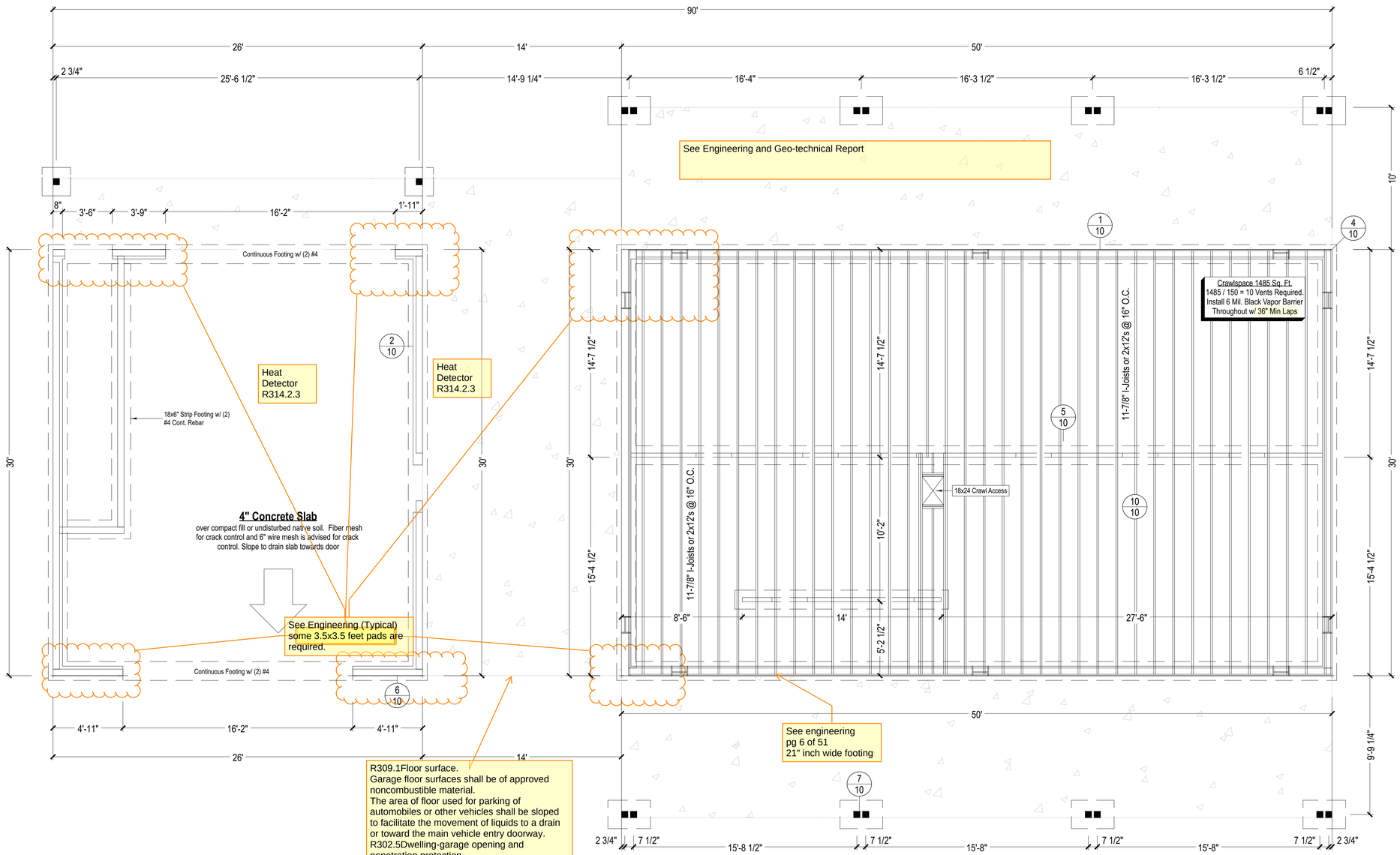

R309.1Floor surface.
Garage floor surfaces shall be of approved noncombustible material.
The area of floor used for parking of automobiles or other vehicles shall be sloped to facilitate the movement of liquids to a drain or toward the main vehicle entry doorway.
R302.5Dwelling-garage opening and penetration protection.
Openings and penetrations through the walls or ceilings separating the dwelling from the garage shall be in accordance with Sections R302.5.1 through R302.5.3.

Foundation & Main Floor Framing Plan - PHS19.056 - Danny Foster
1/4 in = 1 ft

PACIFIC HOME SOURCE LLC
Gabe Spruell
Ph: 253.312.5523
4001 72nd St. E.
Tacoma, WA 98443

Farris, Rich & Kathy
2345 West Stewart
Puyallup, WA 98371
253-255-3413
Parcel # - 0420207029

---These plans are exclusive property of Pacific Home Source (PHS) and may not be sold to any person or business without expressed written consent of PHS. These plans are for one (1) time use only for PHS's customer - Farris, Rich & Kathy and to be built on the customer's site at 2345 West Stewart in Puyallup, WA.
---NOTICE: DO NOT SCALE - The written dimensions on this plan supersede any scaled measurements.
---Copyright notice: these plans are copyrighted and are subject to copyright protection as an "architectural work" under sec. 102 of the copyright act, 17 USC as amended December 1990. The protection includes but is not limited to the overall form as well as the arrangement and composition of spaces and elements of design. Under such protection, any unauthorized use of these plans, the design in whole or part, can legally result in mandatory court costs, fines, and/or other penalties. Independent contractors and/or owners are responsible for verifying the plans prior to proceeding with the work.
---Any variations from conditions and dimensions shown on the drawing shall be reported to the designer for resolution prior to proceeding with the work, otherwise the contractor shall be solely responsible for costs of any necessary remedial work.

Foundation & Framing

PHS Job #:
19.056

Printed On:
6/7/2023 10:39:10

Layout Sheet #
6 of 12

Sheet:
6

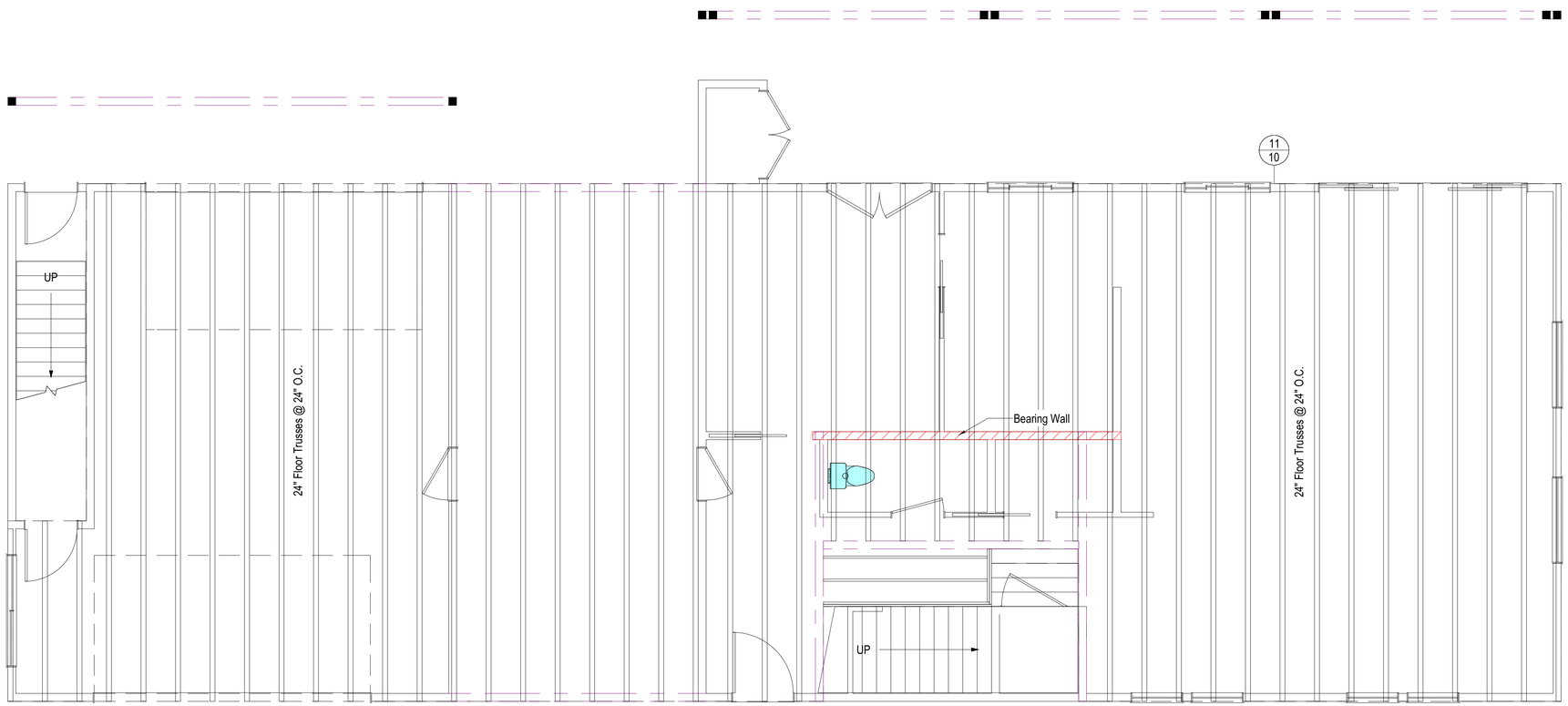

See Engineering and Geo-technical Report

Upper Floor Framing Plan - PHS19.056 - Danny Foster
1/4 in = 1 ft

PACIFIC HOME SOURCE LLC
Gabe Spruell
Ph: 253.312.5523
4001 72nd St. E.
Tacoma, WA 98443

Farris, Rich & Kathy
2345 West Stewart
Puyallup, WA 98371
253-255-3413
Parcel # - 0420207029

---These plans are exclusive property of Pacific Home Source (PHS) and may not be sold to any person or business without expressed written consent of PHS. These plans are for one (1) time use only for PHS's customer - Farris, Rich & Kathy and to be built on the customer's site at 2345 West Stewart in Puyallup, WA 98371.
---NOTICE: DO NOT SCALE - The written dimensions on this plan supersede any scaled measurements.
---Copyright notice: these plans are copyrighted and are subject to copyright protection as an "architectural work" under sec. 102 of the copyright act, 17 USC as amended December 1990. The protection includes but is not limited to the overall form as well as the arrangement and composition of spaces and elements of design. Under such protection, any unauthorized use of these plans, the design in whole or part, can legally result in monetary compensation to the designer. Unauthorized use includes construction of the design and distribution of the plans to others.
---Any variations from conditions and dimensions shown on the drawing shall be reported to the designer for resolution prior to proceeding with the work, otherwise the contractor shall be solely responsible for costs of any necessary remedial work.

Upper Floor Framing

PHS Job #:
19.056

Printed On:
6/7/2023 10:39:10

Layout Sheet #
7 of 12

Sheet:
7

Roof Sheathing Size Requirements

Up to 40 lbs	Up to 70lbs	Up to 130 lbs
7/16" OSB	15/32" OSB	5/8" OSB

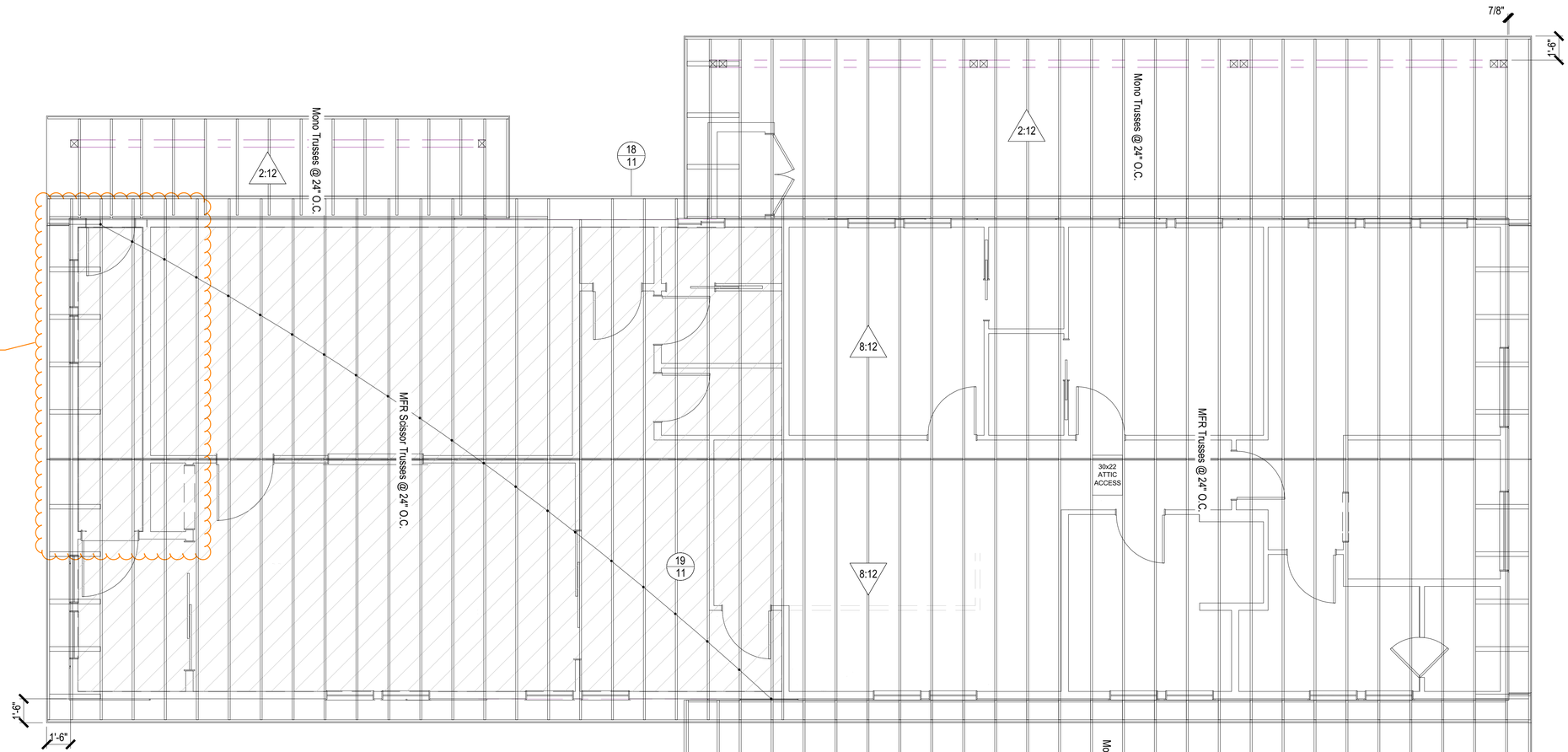

Garage Dwelling Separation:
Separate stair and garage as dwelling separation. Solid door under stairs and 1/2 GWB minimum and seal all penetrations. Review with inspector for questions; may be able to use 5/8 Type X gypsum under-stairs.

Energy Code Notes:
Separate Garage and heated space with insulation

VENTILATION NOTES:

ALL COMBUSTION APPLIANCES WILL BE VENTED DIRECTLY TO THE EXTERIOR. FURNACE FIREBOX AND TANKLESS WATER HEATER SHALL HAVE OUTSIDE COMBUSTION AIR SUPPLY PURSUANT TO REGIONAL AND LOCAL CODES.

ATTIC SHALL HAVE VENTILATION EQUAL TO 1 SQ. FOOT PER 150 SQ. FEET OF ATTIC SPACE (2580 SQ FT / 150 = 17.2 SQ FT . VENTILATION SHALL BE PROTECTED FROM SNOW AND RAIN AND SHALL BE COVERED WITH GALVANIZED WIRE SCREEN. OPENINGS SHALL BE LOCATED TO PROVIDE CROSS VENTILATION.

EXHAUST ALL VENTS AND FANS DIRECTLY TO OUTSIDE VIA METAL DUCTS, PROVIDE 85 CFM (MIN) FAN TO PROVIDE 5 AIR CHANGES PER HOUR OR 30CFM CONTINUOUS WHOLE HOUSE FAN IN LAUNDRY ROOM. PROVIDE 50 CFM FAN IN BATHS CONTAINING TUB AND / OR SHOWER. PROVIDE 100 CFM HOOD FAN FOR STOVETOP.

GARAGES SHALL BE VENTED WITH 60 SQUARE INCHES LOCATED 6" ABOVE THE FLOOR SURFACE.

UNDER FLOOR SPACES SHALL HAVE VENTILATION EQUAL TO ONE SQ. FOOT PER 150 SQ. FEET OF FLOOR SPACE. VENTS SHALL BE CAST INTO THE CONCRETE STEM WALLS AND COVERED WITH GALVANIZED WIRE SCREEN. VENTS SHALL BE LOCATED TO PROVIDE CROSS VENTILATION.

Roof Framing Plan
1/4 in = 1 ft

Gabe Spruell
Ph: 253.312.5523
4001 72nd St. E.
Tacoma, WA 98443
PACIFIC HOME SOURCE LLC

Farris, Rich & Kathy
2345 West Stewart
Puyallup, WA 98371
253-255-3413
Parcel # - 0420207029

---These plans are exclusive property of Pacific Home Source (PHS) and may not be sold to any person or business without expressed written consent of PHS. These plans are for one (1) time use only for PHS's customer - Farris, Rich & Kathy and to be built on the customer's site at 2345 West Stewart in Puyallup, WA 98371.
---NOTICE: DO NOT SCALE - The written dimensions on this plan supersede any scaled measurements.
---Copyright notice: these plans are copyrighted and are subject to copyright protection as an "architectural work" under sec. 102 of the copyright act, 17 USC as amended December 1990. The protection includes but is not limited to the overall form as well as the arrangement and composition of spaces and elements of design. Under such protection, any unauthorized use of these plans, the design in whole or part, can legally result in monetary compensation to the designer. Unauthorized use includes construction from these plans without the designer's permission. Any variations from conditions and dimensions shown on the drawing shall be reported to the designer for resolution prior to proceeding with the work, otherwise the contractor shall be solely responsible for costs of any necessary remedial work.

Roof Framing

PHS Job #:
19.056

Printed On:
6/7/2023 10:39:10

Layout Sheet #
8 of 12

Sheet:
8

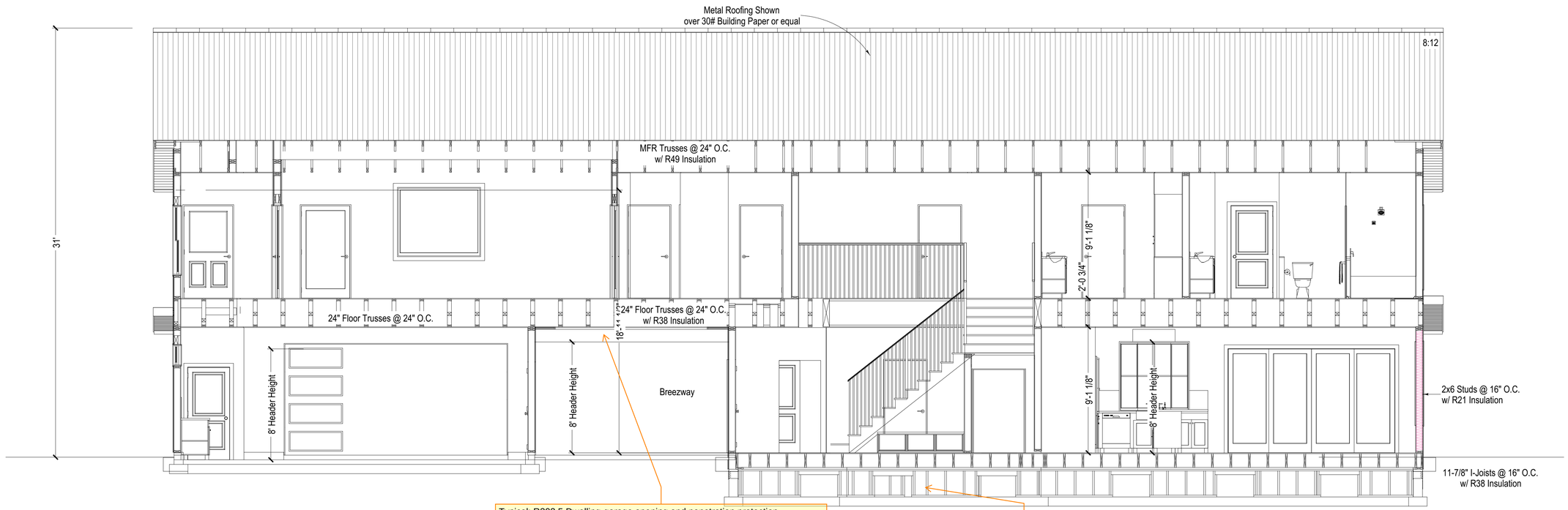

Typical: R302.5 Dwelling-garage opening and penetration protection. Openings and penetrations through the walls or ceilings separating the dwelling from the garage shall be in accordance with Sections R302.5.1 through R302.5.3.

For Ceiling See IRC Table 302.6 for 5/8 type X gypsum board.

See IRC 602.10.10 for Cripple Wall Bracing requirements.

Cross Section A - PHS19.056 - Danny Foster
Scale: 1/4 in = 1 ft

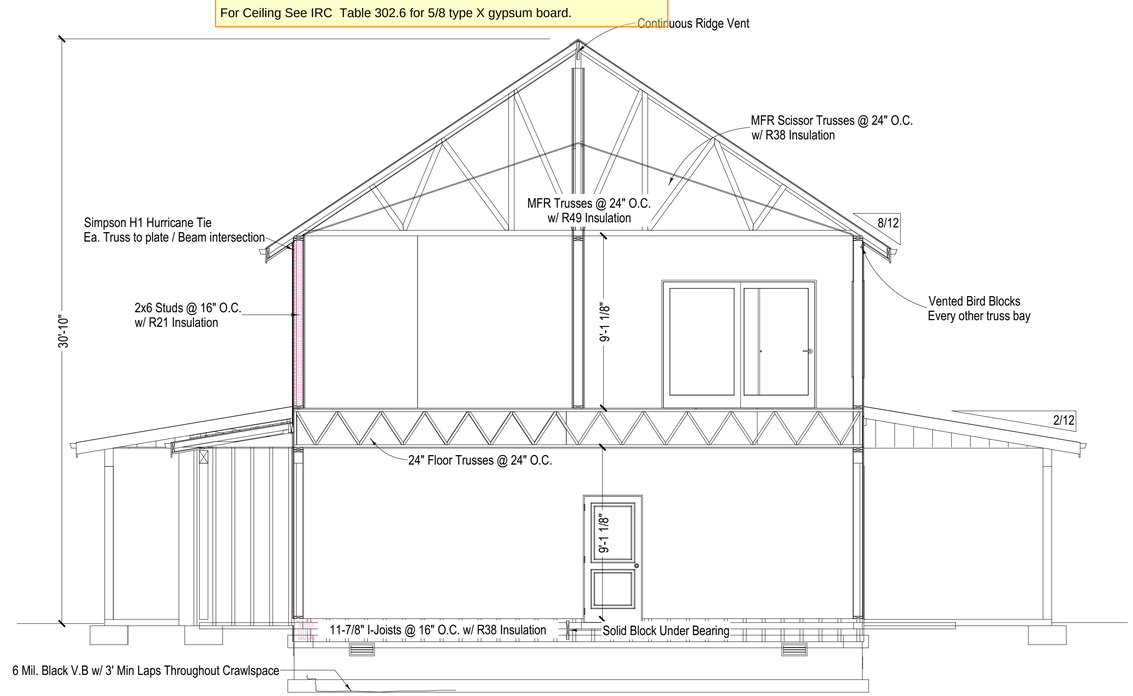

Cross Section B - PHS19.056 - Danny Foster
Scale: 1/4 in = 1 ft

PACIFIC HOME SOURCE LLC
Gabe Spruell
Ph: 253.312.5523
4001 72nd St. E.
Tacoma, WA 98443

Farris, Rich & Kathy
2345 West Stewart
Puyallup, WA 98371
253-255-3413
Parcel # - 0420207029

---These plans are exclusive property of Pacific Home Source (PHS) and may not be sold to any person or business without expressed written consent of PHS. These plans are for one (1) time use only for PHS's customer - Farris, Rich & Kathy and to be built on the customer's site at 2345 West Stewart Puyallup, WA 98371.
---NOTICE: DO NOT SCALE - The written dimensions on this plan supersede any scaled measurements.
---Copyright notice: these plans are copyrighted and are subject to copyright protection as an "architectural work" under sec. 102 of the copyright act, 17 USC as amended December 1990. The protection includes but is not limited to the overall form as well as the arrangement and composition of spaces and elements of design. Under such protection, any unauthorized use of these plans, the design in whole or part, can legally result in monetary compensation to PHS. Under common law, unauthorized use of these plans and designs can also be prosecuted in civil court.
---Any variations from conditions and dimensions shown on the drawing shall be reported to the designer for resolution prior to proceeding with the work, otherwise the contractor shall be solely responsible for costs of any necessary remedial work.

Cross Sections

PHS Job #: 19.056

Printed On: 6/7/2023 10:39:10

Layout Sheet # 9 of 12

Sheet: **9**

01 Foundation Wall with Rim Joist

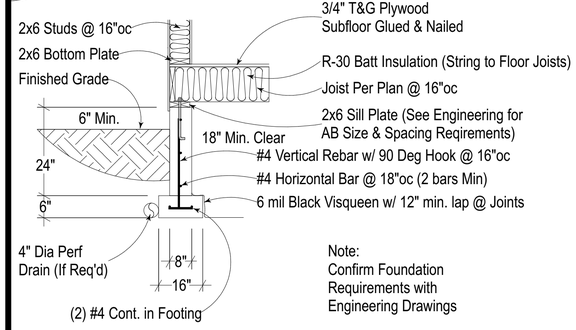

Note:
Confirm Foundation Requirements with Engineering Drawings

02 Foundation Wall with Garage / Slab on Grade

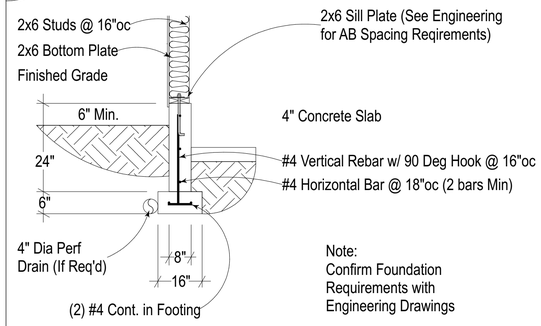

Note:
Confirm Foundation Requirements with Engineering Drawings

03 Stepped Footing & Pony Wall As Required by Site Work & Grading

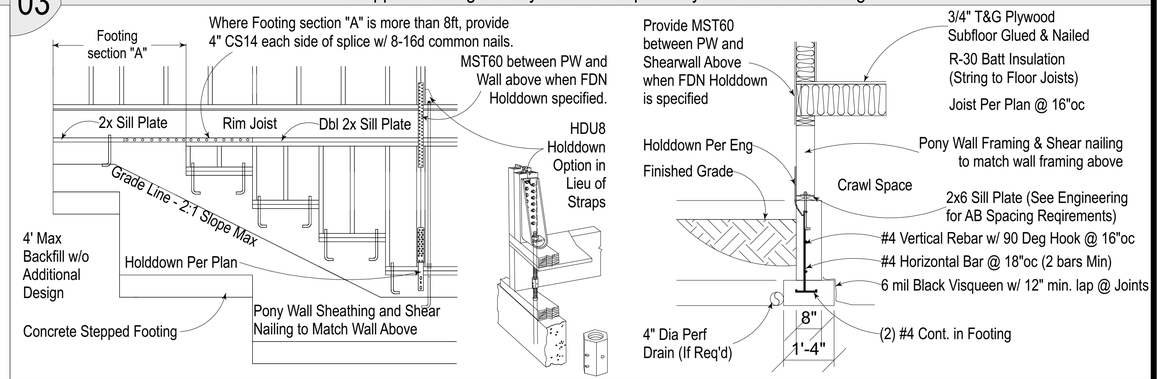

04 Concrete Wall Corner Details

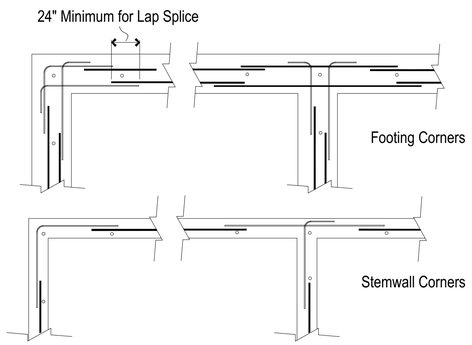

05 Interior Strip Footing Below Floor Joists

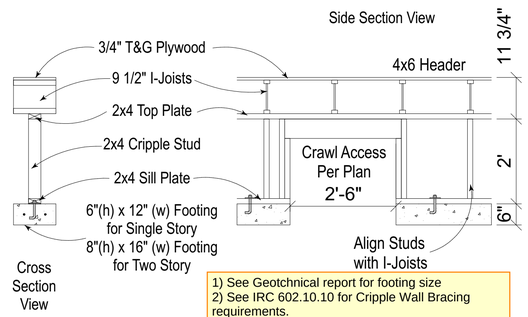

1) See Geotchnical report for footing size
2) See IRC 602.10.10 for Cripple Wall Bracing requirements.

06 Portal Framing with Holddowns - IRC Fig R602.10.3.3

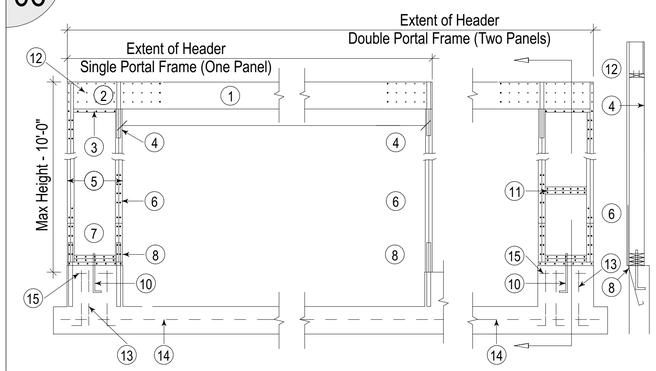

1. Header Per Plan for Shear (min 4x12)
2. Fasten Sheathing to Header w/ 8d common or galvanized box nails in 3" grid pattern as shown and 3"oc in all framing
3. Fasten Top Plate to header w/ Two Rows of 16d Sinker Nails @ 3"oc (Typ)
4. LSTA24 Opposite Sheathing
5. Min Width - 16" for Single Story, 24" for use in first of two story.
6. Min (2) 2x4 - All DF#2 studs or (2) 2x6
7. 7/16" OSB Sheathing Min.
8. STHD14 or HDU8 w/ SB 7/820
9. STHD8 Single Portal Frame
10. 5/8" AB w/ min 3x3x229 Plate Washer
11. For a Panel Slice (if needed) Panel Edges shall be blocked, and occur within 24" of mid-height. One row of Typ sheathing to framing nailing is required. If 2x4 blocking is used, the 2x4's must be nailed together with (3) 16d sinkers.
12. Header extended over shearwall
13. (3) #4 Hooked vert rebar
14. Cont. 12"x24" Footing w/ (3) #4
15. #4 Horizontal

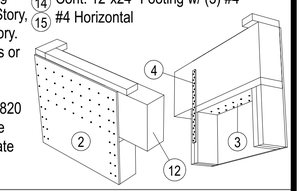

07 Post & Beam Connection Detail

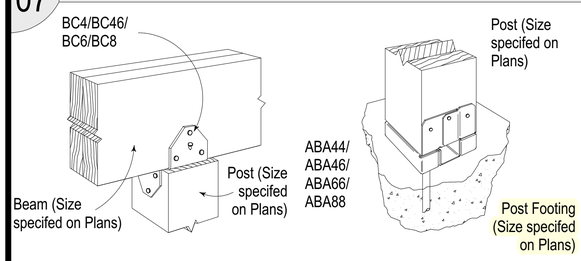

BC4 for use with 4x4 Post
BC46 for use with 4x6 Post
BC6 for use with 6x6 Post
BC8 for use with 8x8 Post

Post to Beam Connection

ABA44 for use with 4x4 Post
ABA46 for use with 4x6 Post
ABA66 for use with 6x6 Post
ABA88 for use with 8x8 Post

ABA Post Base Connection

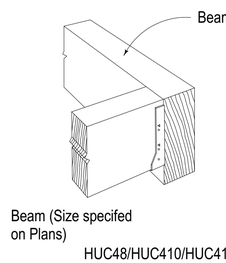

HUC48 use with 4x8 Beam
HUC410 use with 4x10 Beam
or 3 1/8 x 9 GLB
HUC412 use with 4x12 Beam
or 3 1/8 x 10 1/2 GLB
or 3 1/8 x 12 GLB
HUC68 use with 6x8 Beam
HUC610 use with 6x10 Beam
or 5 1/8 x 9 GLB
HUC612 use with 6x12 Beam
or 5 1/8 x 10 1/2 GLB
or 5 1/8 x 12 GLB
Contact General Contractor if size not listed

HUC Connection to House

08 Inside / Outside Corners (Typ)

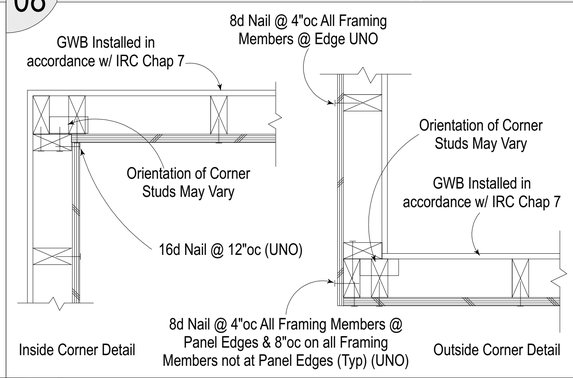

09 Beam & Header End Support

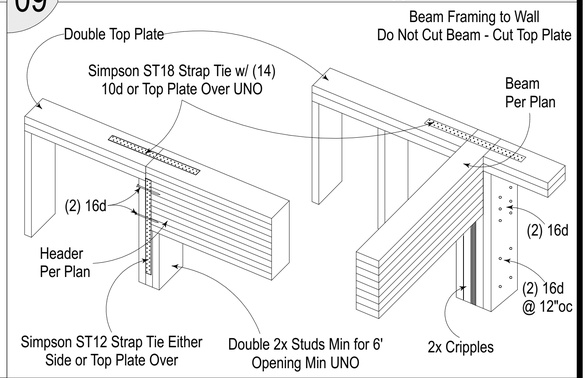

10 Typical Floor Nailing

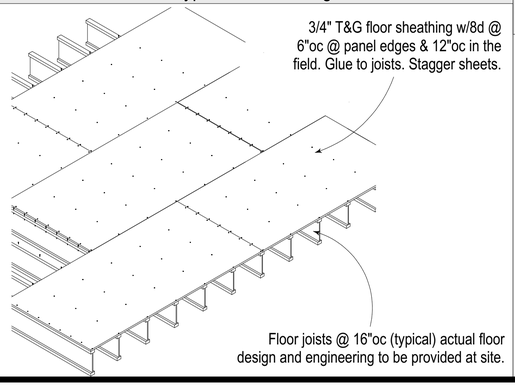

11 Floor to Floor Connection

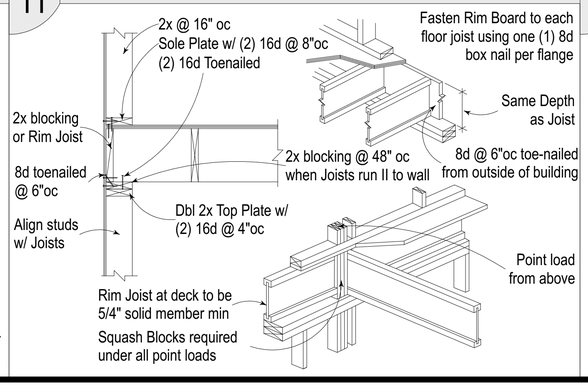

12 Water Heater Strapping

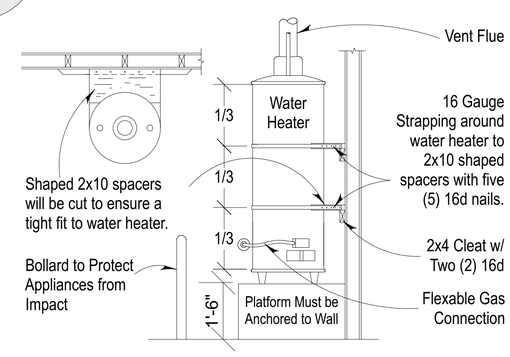

This Space is Not Used

Gabe Spruell
Ph: 253.312.5523
4001 72nd St. E.
Tacoma, WA 98443
PACIFIC HOME SOURCE LLC

Farris, Rich & Kathy
2345 West Stewart
Puyallup, WA 98371
253-255-3413
Parcel # - 0420207029

---These plans are exclusive property of Pacific Home Source (PHS) and may not be sold to any person or business without expressed written consent of PHS. These plans are for one (1) time use only for PHS's customer - Farris, Rich & Kathy and to be built on the customer's site at 2345 West Stewart, Puyallup, WA 98371.
---NOTICE: DO NOT SCALE - The written dimensions on this plan supersede any scaled measurements.
---Copyright notice: these plans are copyrighted and are subject to copyright protection as an "architectural work" under sec. 102 of the copyright act, 17 USC as amended December 1990. The protection includes but is not limited to the overall form as well as the arrangement and composition of spaces and elements of design. Under such protection, any unauthorized use of these plans, the design in whole or part, can legally result in ownership of the copyright being transferred to the author of the plans by court order, plus other damages and court costs to be paid by the violator.
---Any variations from conditions and dimensions shown on the drawing shall be reported to the designer for resolution prior to proceeding with the work, otherwise the contractor shall be solely responsible for costs of any necessary remedial work.

Details

PHS Job #: 19.056

Printed On: 6/7/2023 10:39:11

Layout Sheet # 10 of 12

Sheet: **10**

13 Stair & Guard Rail Requirements

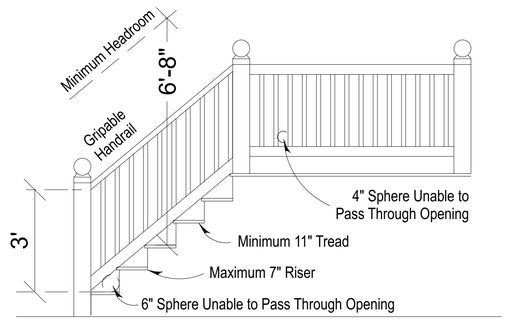

R311.5.1 Width. Stairways shall not be less than 36 inches (914 mm) in clear width at all points above the permitted handrail height and below the required headroom height. Handrails shall not project more than 4.5 inches (114 mm) on either side of the stairway and the minimum clear width of the stairway at and below the handrail height, including treads and landings, shall not be less than 32 inches (787 mm) where a handrail is installed on one side and 27 inches (698 mm) where handrails are provided on both sides.

R311.5.6.1 Handrail height, measured vertically from the sloped plane adjoining the tread nosing, or finish surface of ramp slope, shall be not less than 34 inches (864 mm)and not more than 38 inches (965 mm). End shall return to wall or newel post or volute. Handrail must be strong enough to resist a 200 lb. Pt. Load in any direction. A Handrail must be present on at least one side of stair. Handgrip portion of handrails shall have circular cross section of 1" min. & 2" max. All required guardrails to be 36" min. In height.

R311.5.7 - All interior and exterior stairways shall be provided with a means to illuminate the stair including landings & treads. Interior stairways shall be provided with an artificial light source located in the immediate vicinity of the landing of the stairway. Exterior stairways shall be provided with a light source located in the immediate vicinity of the top of the landing of the stairway. Lighting controls shall be accessible at the top & bottom of each stairway without traversing any steps.

14 Stair Base Floor Connection

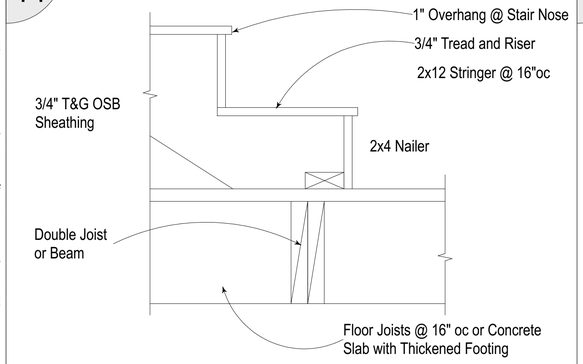

15 Stair @ Floor Connection

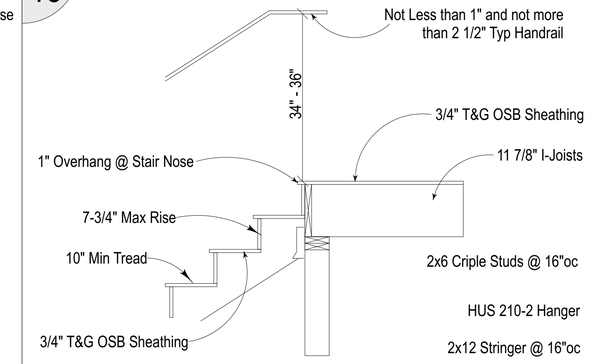

16 Stair & Landing Connections

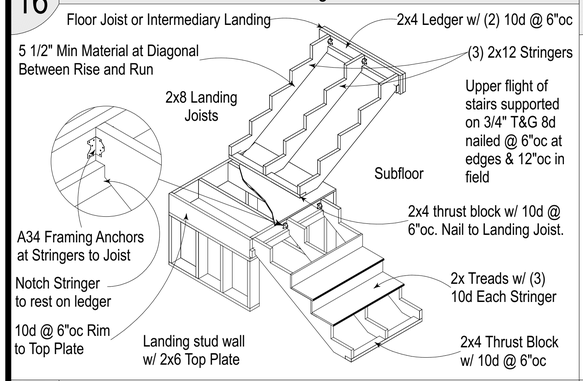

17 Roof Truss Detail at Eave & Rake

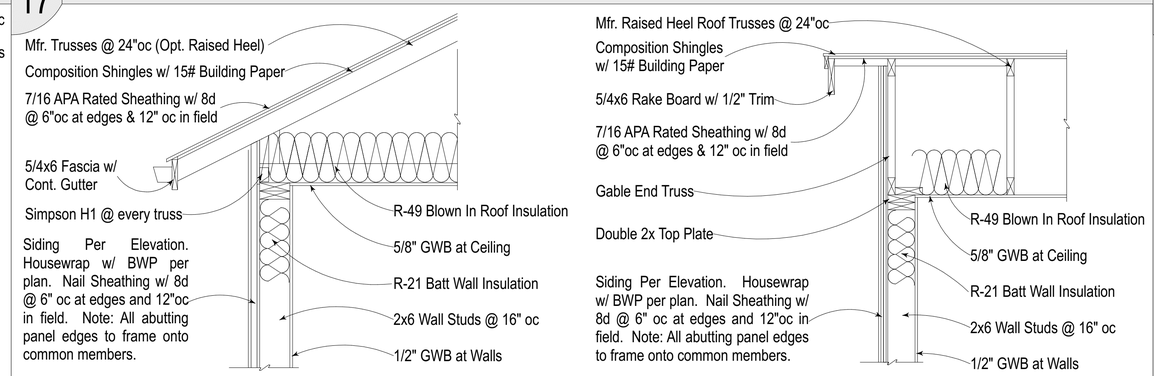

18 Typical Roof Diaphragm Nailing

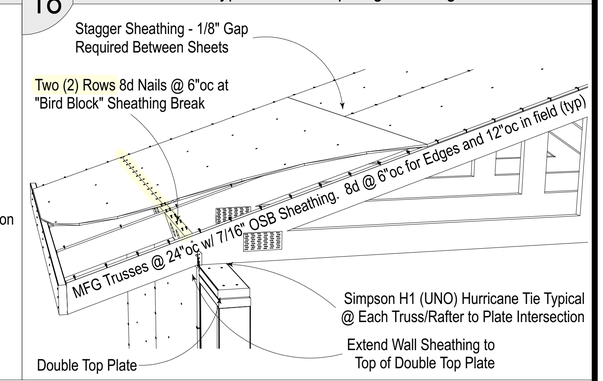

19 Mono-Truss Section Detail

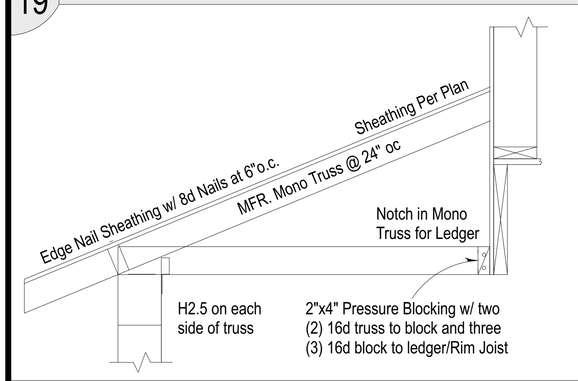

20 Exterior Monolithic Footing

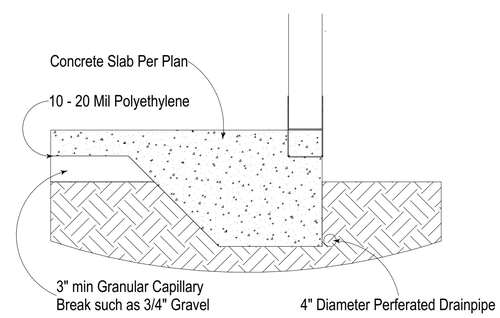

This Space is Not Used

Gabe Spruell
Ph: 253.312.5523
4001 72nd St. E.
Tacoma, WA 98443
PACIFIC HOME SOURCE LLC

Farris, Rich & Kathy
2345 West Stewart
Puyallup, WA 98371
253-255-3413
Parcel # - 0420207029

--These plans are exclusive property of Pacific Home Source (PHS) and may not be sold to any person or business without expressed written consent of PHS. These plans are for one (1) time use only for PHS's customer - Farris, Rich & Kathy and to be built on the customer's site at 2345 West Stewart in Puyallup, WA 98371.
--NOTICE: DO NOT SCALE - The written dimensions on this plan supersede any scaled measurements.
--Copyright notice: these plans are copyrighted and are subject to copyright protection as an "architectural work" under sec. 102 of the copyright act, 17 USC as amended December 1990. The protection includes but is not limited to the overall form as well as the arrangement and composition of spaces and elements of design. Under such protection, any unauthorized use of these plans, the design in whole or part, can legally result in monetary compensation to the designer. Written consent must be obtained from the designer before using these plans.
--Any variations from conditions and dimensions shown on the drawing shall be reported to the designer for resolution prior to proceeding with the work, otherwise the contractor shall be solely responsible for costs of any necessary remedial work.

Details Continued

PHS Job #: 19.056

Printed On: 6/7/2023 10:39:11

Layout Sheet # 11 of 12

Sheet: **11**

1. General Notes

1.1 - All construction shall be in accordance with the minimum provisions of the 2015 Edition of the International Building Code (IBC) and the 2015 Edition of the International Residential Code (IRC); where these plans and specifications do not state specifically otherwise the provisions of the IBC shall apply.

1.2 - Typical details and schedules in these Construction Documents shall be used wherever applicable.

1.3 - The subcontractors shall verify all dimensions in the field, and upon discovery of any discrepancies shall be immediately reported to Drafter/Engineer. DO NOT SCALE DRAWING.

1.4 - No changes are to be made to the plan without the consent of the drafter, engineer and building department.

1.5 - Subcontractors shall verify all 'fit' conditions in the field. Should the subcontractor or fabricator note any conflicts or errors in the plans and/or specifications, they shall be brought to the immediate attention of Drafter/Engineer. If any questions arise during construction pertaining to any structural matter, Drafter/Engineer shall be consulted immediately for prompt resolution.

1.6 - The subcontractor is responsible for all erection and/or temporary bracing and shoring. Where the floor is used to brace the walls, do not backfill retaining walls until main floor plywood is in place.

1.7 - Fire-Blocking is required at all penetrations at the walls and plates including: Plumbing, Electrical and Mechanical penetrations. Fire-Block at minimum 10 feet o.c. horizontally in wall cavities.

1.8 - Where required, use a minimum of 2500 psi concrete per 2015 IRC Table R402.2, including foundation walls, porch and garage slabs, steps and all other areas that are exposed to the weather. Maximum strength is at 28 days. Allow adequate time for foundation to set before backfilling.

1.9 - Water Heater is to be installed per manufacturer specifications, 2015 IRC requirements and the state adopted plumbing code. Tank must be strapped at the upper and lower third of the tank. At the lower strap, strap is to be 4" minimum above the controls, per 2015 IRC Chapter 13 Section M1307.2. When installed in a garage, all appliances must have the source of ignition a minimum of 18" above the floor slab. Mechanical/Plumbing equipment is to be protected from impact of a vehicle.

1.10 - Use 5/8" sheetrock or 1/2" sag-resistant at the ceiling per 2015 IRC section R702.3.5 and table.

1.11 - Flashing is required at all exterior trim extrusions, window sills, jambs and other areas that water may intrude. Per the 2015 IRC, install windows per manufacturer instructions.

2. Foundations Notes

2.1 - All footings shall bear on stiff, firm soil meeting the requirements of default site class "D" per 2015 IBC Section 1613.5.2. Design is based on 1500 psf soil. Contractor must verify with building department that these conditions are met prior to work.

2.2 - All wood in contact with concrete shall be 2x Hem-Fir #2 minimum treated with an approved preservative and galvanized hot-dipped connectors (or) standard Hem-Fir on an impervious moisture barrier (IRC R319.1) or borate treated Hem-Fir #2 minimum.

2.3 - Provide appropriate block-outs in footings or walls for plumbing and electrical stub outs.

2.4 - Use 2500 psi concrete where required by the 2015 IRC table 402.2. Maximum compressive strength at 28 days.

2.5 - Foundation vents are to be installed at 1 Square Foot ventilation per 150 square feet of Crawl Space per 2015 IRC Section R408.2. Vents are to be a maximum of 36" from building corners. **WA State Amendments allow for 1 square foot Per 300 square feet of Crawl Space.**

2.6 - 2x pressure-treated mudsill to be installed flush with the inside face of foundation wall at joist bearing points to accept joist hangers. verify that the mudsill is square at all corners. Attach the mudsill to the foundation with 1/2" x 10" anchor bolts and 1/4" x 3" x 3" washer @ 6' oc UNO.

2.7 - Rebar is not required in interior footings unless it is below a load bearing point, or an interior shearwall per 2015 IRC Section R403.1.3.

2.8 - The foundation in this plan is designed prescriptively, but the connections from the foundation to the mudsill is engineered for resisting lateral loads as outlined in the design criteria on the cover sheet.

2.9 - See engineered foundation details for footing sizes.

2.10 - Where required per 2015 IRC R406.1, foundation walls shall be damp proofed around the entire perimeter using a method that is approved by the building department.

2.11 - Footing drains, with washed drain rock extending to within one foot of top of finished grade, shall be provided at the base of all footings and retaining walls which will have earth placed against them. Footing drains shall be 4" perforated pipe routed down gradient to daylight, unless otherwise specified. The invert elevation of all footing drains shall be lower than the bottom of adjacent footings drained.

3. Framing Notes

3.1 - All sawn framing lumber shall be Hem-Fir #2 or better, unless otherwise shown. Provide studs directly underneath all top plate splice locations. Connect all wood members per the IBC.

3.2 - Anchor bolts to mud sill, use 1/2" diameter x 7" embedment at 48" OC, with standard steel plate washers, wrench tight, unless otherwise shown.

3.3 - Wood ledgers (2x8 P.T. min.) to concrete or masonry, use 5/8" diameter anchor bolts with 6-inch minimum embedment spaced 16 inches on center, staggered, unless otherwise shown.

3.4 - Wood 2x ledgers to studs or other wood, use 16d at 4 inches on center to continuous member, or 3, 16d per stud, studs spaced 16" OC or less, unless otherwise shown.

3.5 - Built-up beams consisting of dimension lumber (typically 2x stock) are permitted in lieu of sawn solid beams only if the 2x's are oriented such that they are not stacked on top of each other with the sum of their weak axes resisting load, but are nailed together side-by-side, with the sum of their strong axes resisting load. Use 16d face nails at 6" OC staggered into all tributary members.

3.6 - Use pressure treated lumber in contact with concrete. Pressure treating chemicals shall be inert to and not reactive with metal and/or connectors.

3.7 - Provide bridging or blocking at 8' OC max. in joist or rafters without continuous diaphragm support on the top and bottom (i.e. plywood on the top and gyp. on the bottom). Provide solid blocking at all bearing points, and double joists under all partition walls parallel to the floor joists. Framed floors which support posts shall be solidly blocked within the floor to positively transfer posts loads through the floor to the supports beneath.

3.8 - Simpson brand is specified, however any other nationally recognized brand (Silver, KC, etc.) may be used provided that they are equivalent in their ability to carry all applied loads in all orientations.

3.9 - The subcontractor shall install all prefabricated items in strict accordance with the manufacturer's recommendations and requirements.

3.10 - Where holdowns are shown on the plans, the factory specified anchor bolts, lags, or nails, which connect to the vertical member shall be installed per manufacture recommendations and/or specifications. Vertical members shall be double 2x, or single 4x material unless otherwise specified. Anchor bolts, which are too long to fit in the footing in a vertical orientation, may be bent in a smooth curve to a maximum of 90 degrees and extended horizontally within the footing. 'All-thread' with head and washers at the embedded end may be substituted for long anchor bolts.

3.11 - The Contractor shall verify with the prefab. wood manufacturer that the specified connectors will work as intended with their product.

3.12 - Top of retaining wall (concrete, masonry, In steel) to floor joist: for wall perpendicular to joist, See Engineering.

3.13 - For sheathing use OSB unless otherwise noted. Store and install in accordance with the recommendations of A.P.A and IBC for shear resisting vertical and horizontal diaphragms.

3.14 - Oriented Strand Board (OSB), with shear resistance values similar to 1/2" plywood may be substituted for plywood on shear walls and on roof, unless otherwise specified on the Plans. If OSB is used, the same nailing and blocking schedule as per plywood shall be adhered to. Where used on roof OSB shall meet or exceed the proper span rating for trusses and/or rafters as installed. All OSB shall be stored and installed in accordance with manufacturer's recommendations.

3.15 - All plywood on shear walls shall have all edges blocked. All blocking to receive edge nailing. If not otherwise specified on the Plans, standard shear wall construction shall consist of 1/2" plywood or 7/16" OSB, nailed with 8d at 6" on edges, and 12" in field. All shear walls shall be positively connected to horizontal diaphragms at their tops and bottoms per the above, or as called out in the Plans.

3.16 - If roof diaphragm is not specified in Plans or Calculations, use 1/2" over non-blocked supports at 24" OC, Use IBC Case 1 pattern. Nail with 8d at 6" on edges, and 12" in field. Contractor to verify all span ratings.

3.17 - All wood floor diaphragms shall be glued and nailed. Use thickness as shown on the Plans. Contractor to verify all span ratings of plywood. Where otherwise not shown on Plans, nail floor diaphragm using 10d (screw type nails recommended) at 6" on edges, 12" in field, non-blocked, per IBC Case 1 pattern.

3.18 - Fire-Blocking is required at all penetrations at the walls and plates including: Plumbing, Electrical and Mechanical penetrations. Fire-Block at minimum 10 feet o.c. horizontally in wall cavities.

3.19 - Nail all top plates together with 10d nails @ 12" o.c. and at splices with 10d nails @ 6" o.c UNO. Lap splices a minimum of 48" typical. Nail all bottom plates to floor sheathing and mudsill with (2-10d nails each stud bay. Nail all OSB sheathing with 8d nails @ 6" o.c. on edge and 12" o.c. in the field UNO. Exterior studs must be spaced at 16" o.c.

3.20 - Cabinet, plumbing fixture and door rough openings are critical dimensions. Take care to verify that these dimensions are framed accurately.

3.21 - See Engineering for all shearwall placements and requirements. Shearwall details must be followed exactly. Notify the designer of any discrepancies or concerns.

3.22 - Review approved plans and details prior to starting framing work. Check for specific requirements on nailing, blocking, sheathing and anchor attachments.

4. Roofing Notes

4.1 - Joists and rafters are to be DF #2 minimum. Rafters may be supported by posting down to flat blocking that spans a minimum of two trusses.

4.2 - Trusses shall carry manufacturer stamp and have engineering drawings on site for inspection. All truss bracing requirements must be installed per truss drawings. DO NOT field modify any truss without prior approval from the engineer and building department. If a truss is damaged, DO NOT INSTALL IT. Contact the builder immediately for a replacement truss.

4.3 - Framing connections shall be "Simpson Strong Tie" or an approved equivalent.

4.4 - Provide attic ventilation per 2015 IRC R806.2. The net free ventilated area shall be 1/300 square feet. 50% of the required ventilation area shall be a minimum of 3 feet above eave vents. The balance of required ventilation shall be provided at the eaves.

4.5 - Provide a minimum rough opening 22x30 attic access panel with a tight fitting, self closing door. Door shall be backed with insulation if located above heated space. Verify access location with owner and plans.

4.6 - UNO. Sheath Roof per 2015 IBC Case 1 (Staggered Panels Unblocked). Fasten panels with 8d nails @ 6" oc @ edge and 12" oc in the field. DO NOT STAPLE! Unless Approved by a Licence Engineer.

4.7 - UNO. Toe-Nail all gable end trusses with (2) 10d nails @ 16" oc into top plates.

4.8 - UNO. Toe-Nail each end of truss at bearing walls with (2) 10d nails and fasten with truss clips per plans.

5. Electrical Notes

5.1 - Smoke detectors shall be 110v. Hard wired with battery backup and shall be interconnected. Owner shall be responsible for smoke detectors if a monitored fire system is required.

5.2 - Electrical contractor shall coordinate location of panel and meter with contractor.

5.3 - Electrical contractor shall provide heat-loss calculations or follow the prescriptive path requirements for sizing heating equipment.

5.4 - Electrical contractor shall conform to all local and state codes.

5.5 - Exact placement of outlets may vary depending on construction variables.

5.6 - Where a dryer is vented through a foundation vent the vent must be completely sealed to prevent moist exhaust are from reentering the crawl space.

5.7 - Per 2015 IRC R315.1 - An approved carbon monoxide alarm shall be installed outside of each separate sleeping area in the immediate vicinity of the bedroom in dwelling units and on each level of the dwelling and in accordance with the manufacturers recommendations.

PACIFIC HOME SOURCE LLC
Gabe Spruell
Ph: 253.312.5523
4001 72nd St. E.
Tacoma, WA 98443

Farris, Rich & Kathy
2345 West Stewart
Puyallup, WA 98371
253-255-3413
Parcel # - 0420207029

--These plans are exclusive property of Pacific Home Source (PHS) and may not be sold to any person or business without expressed written consent of PHS. These plans are for one (1) time use only for PHS's customer - Farris, Rich & Kathy and to be built on the customer's site at 2345 West Stewart Puyallup, WA.
--NOTICE: DO NOT SCALE - The written dimensions on this plan supersede any scaled measurements.
--Copyright notice: these plans are copyrighted and are subject to copyright protection as an "architectural work" under sec. 102 of the copyright act, 17 USC as amended December 1990. The protection includes but is not limited to the overall form as well as the arrangement and composition of spaces and elements of design. Under such protection, any unauthorized use of these plans, the design in whole or part, can legally result in an infringement suit by the architect against the infringing parties. Infringers may be required to pay actual damages or statutory damages.
--Any variations from conditions and dimensions shown on the drawing shall be reported to the designer for resolution prior to proceeding with the work, otherwise the contractor shall be solely responsible for costs of any necessary remedial work.

General Notes

PHS Job #: 19.056

Printed On: 6/7/2023 10:39:11

Layout Sheet # 12 of 12

Sheet: **12**