PUYALLUP SCHOOL DISTRICT NO. 3
TRANSPORTATION AND
DRIVER TRAINING MODULAR BUILDING

1501 39TH AVENUE S.W. PUYALLUP, WASHINGTON 98373

PROJECT INFORMATION:

PARCEL NUMBER:	0419043117
SITE ZONING:	PF (PUBLIC FACILITIES)
NEW IMPERVIOUS SURFACE:	1,435 S.F. (INCLUDES 1,008 S.F. PORTABLE AND EXCLUDES ANY REPLACED IMPERVIOUS SURFACE REQUIRED FOR UTILITY CONNECTIONS).
PARKING REQUIREMENTS:	1 NEW ACCESSIBLE PARKING STALL PROPOSED.
TYPE OF BUSINESS:	DRIVER TRAINING MODULAR BUILDING
PROJECT ADDRESS:	1501 39TH AVENUE S.W. PUYALLUP, WA 98373
CUT/FILL:	10± CY CUT/15± CY FILL (FOR PERMITTING PURPOSES ONLY)

PREPARED FOR:

PUYALLUP SCHOOL DISTRICT NO. 3

323 12TH STREET N.W.
PUYALLUP, WASHINGTON 98371
CONTACT: MICHAEL MEADOWS, DIRECTOR,
CONSTRUCTION MANAGEMENT
(253) 435-6622

PREPARED BY:

SITTS & HILL ENGINEERS, INC.

CIVIL ▪ STRUCTURAL ▪ SURVEYING

4815 CENTER STREET. TACOMA, WA. 98409 (253) 474-9449 FAX (253) 474-0153

CONTACT: RICK HAND, P.E.

INDEX OF DRAWINGS:

DRAWING No.	SHEET No.	TITLE - DESCRIPTION
T1.0	1 OF 11	COVER SHEET
C0.1	2 OF 11	SURVEY BASE PLAN
C0.2	3 OF 11	ABBREVIATIONS, LEGEND AND NOTES
C1.0	4 OF 11	DEMOLITION & TESC PLAN
C1.1	5 OF 11	DEMOLITION AND TESC NOTES & DETAILS
C2.0	6 OF 11	GRADING, DRAINAGE & SURFACING PLAN
C2.1	7 OF 11	PROJECT NOTES
C2.2	8 OF 11	GRADING, DRAINAGE & SURFACING DETAILS
C3.0	9 OF 11	UTILITY PLAN
C3.1	10 OF 11	SEWER UTILITY NOTES & DETAILS
C3.2	11 OF 11	WATER UTILITY NOTES & DETAILS

1 RECORD DRAWINGS
INFORMATION PROVIDED BY CONTRACTOR.

HORIZONTAL DATUM

ASSUMED

SEE CONTROL POINTS LABELED HEREON FOR COORDINATE VALUES

VERTICAL DATUM

NGVD 29

SITE TBM:
MAG NAIL AT NORTH SIDE OF PARKING LOT
ELEVATION=354.36

TO CONVERT TO NAVD88 DATUM
ADD 3.58' TO ALL ELEVATION VALUES

SITE DATA

1. TAX PARCEL NO. 0419043117
2. ADDRESS: 1509 39TH AVE. S.W. PUYALLUP WA

NOTES

1. EQUIPMENT USED: TOPCON QS ROBOTIC TOTAL STATION
2. THIS SURVEY WAS PERFORMED BY FIELD TRAVERSE WITH THE FINAL RESULTS MEETING OR EXCEEDING THE CURRENT TRAVERSE STANDARDS CONTAINED IN W.A.C. 332-130-090. ALL MEASUREMENTS WERE MADE WITH A TOPCON QS ROBOTIC TOTAL STATION IN ACCORDANCE WITH THE EQUIPMENT MANUFACTURER'S SPECIFICATIONS.
3. NO BOUNDARY WORK WAS PERFORMED FOR THIS SURVEY.
4. FIELD WORK PERFORMED IN FEBRUARY 2016, UNDER SITTS & HILL JOB NUMBER 16785.500.
5. UTILITIES AS SHOWN HEREON ARE BASED ON FIELD SURVEY OBSERVATION OF UTILITY LOCATE SERVICES PERFORMED BY (COMPANY) IN (DATE) FOR THIS SURVEY. THIS HAS BEEN SUPPLEMENTED BY RECORD INFORMATION PROVIDED BY (AGENCY). RECORD UTILITY LINES SHOWN HEREON ARE DEPICTED WITH A DASHED LINETYPE AS SHOWN IN THE LEGEND. UTILITIES OTHER THAN SHOWN MAY EXIST ON THE SITE. THE SURVEYOR DOES NOT WARRANT THAT THE UNDERGROUND UTILITIES SHOWN ARE IN THE EXACT LOCATION INDICATED. THE SURVEYOR DOES CERTIFY THAT THEY ARE SHOWN AS ACCURATELY AS POSSIBLE FROM FIELD SURVEY AND PAINTED UTILITY LOCATE LINES. COLLECTION AND DEPICTION OF EXISTING SUBSURFACE UTILITY DATA IS CONSISTENT WITH QUALITY LEVEL (A,B,C,D) OF THE ASCE STANDARD GUIDELINES 38-02.

ABBREVIATED LEGAL DESCRIPTION (PER P.C. ASSESSOR)

SECTION 04 TOWNSHIP 19 RANGE 04 QUARTER 33 W 1/2 OF W 1/2 OF E 1/2 OF SW OF SW TOG/W E 1/2 OF W 1/2 OF SW OF SW EXC 112TH ST E ALSO EXC POR CYD TO STATE OF WA PER AFN 2239840 & ETN 868450 TOG/W W 1/2 OF W 1/2 OF SW OF SW EXC S 553.14 FT THEREOF ALSO EXC FOLL COM AT SW COR OF SEC 4 TH N 985.90 FT TO POB TH E 162.0 FT TH N 00 DEG 04 MIN 25 SEC E A DIST OF 148.0 FT TH S 89 DEG 07 MIN 39 SEC W A DIST OF 162.0 FT TO THE W LI OF SD SEC TH S 00 DEG 04 MIN 25 SEC W 148.0 FT ALG THE W LI OF SD SEC TO POB ALSO EXC FOLL COM AT SW COR OF SEC TH N ALG W LI OF SEC 1148.90 FT TO POB TH E 162 FT TH N 148 FT TH W 162 FT TO THE W LI OF SD SEC TH S ALG SD W LI 148 FT TO POB EXC W 15 FT FOR CO RD EXC THAT POR ACQUIRED FOR STATE HWY #5G TOG/W BEG AT SW COR OF SEC 4 TH N 00 DEG 04 MIN 25 SEC E ALG W LI OF SD SEC A DIST OF 985.90 FT TO POB TH N 89 DEG 07 MIN 39 SEC E A DIST OF 162.0 FT TH N 00 DEG 04 MIN 25 SEC E A DIST OF 148.0 FT TH S 89 DEG 07 MIN 39 SEC W A DIST OF 162.0 FT TO THE W LI OF SD SEC TH S 00 DEG 04 MIN 25 SEC W 148.0 FT ALG W LI OF SD SEC TO POB EXC CO RD SUBJ TO EASE FOR TRANS LI PER AFN 22398 EXC THAT POR CYD TO CY OF PUYALLUP FOR R/W PER ETN 4216677 & 4216678 COMB FOR TAX PURPOSES ONLY COMB OF 3-116, 3-054 & 3-053 SEG 2008-0028 08/08/07CL DC08/26/09CL

OVERALL SITE:

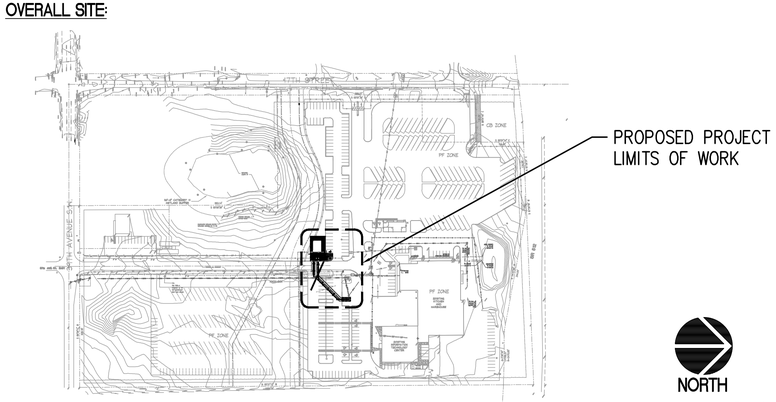

SITE PLAN
SCALE: 1"=200'

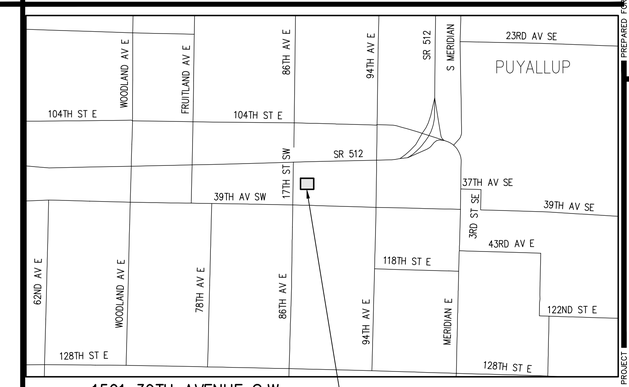

1501 39TH AVENUE S.W.
PUYALLUP, WASHINGTON 98373

VICINITY MAP
SCALE: N.T.S.

NORTH

REVISIONS

RECORD DRAWING	06-20-2016
PERMIT	04-28-2016

APPROVALS

DESIGNED	S.H.
DRAWN	J.B.
CHECKED	R.H.
DATE	04-06-2016
SCALE	AS NOTED

SEAL: RICHARD C. HAND, STATE OF WASHINGTON, REGISTERED PROFESSIONAL ENGINEER, 06/20/16

PREPARED BY:
SITTS & HILL ENGINEERS, INC.
CIVIL ▪ STRUCTURAL ▪ SURVEYING
4815 CENTER STREET | TACOMA, WA. 98409
PHONE: (253) 474-9449 | FAX: (253) 474-0153
http://www.sitts-hill-engineers.com/

PREPARED FOR:
PUYALLUP SCHOOL DISTRICT NO. 3
323 12TH STREET N.W.
PUYALLUP, WASHINGTON 98371

PROJECT:
TRANSPORTATION AND DRIVER TRAINING MODULAR BUILDING
PUYALLUP, WASHINGTON

SHEET TITLE:
COVER SHEET

SHEET NO.
T1.0
1 OF 11

PROJECT NO.
16785.50

P:\16700\16785\Drawings\16785.50 Driver Training Portable Project\16785.5 - 11.0.dwg last edited: 06/20/16 3:20pm by: wdiksaj

SOUTHWEST 1/4 OF SECTION 04, TOWNSHIP 19 NORTH, RANGE 4 EAST WILLAMETTE MERIDIAN

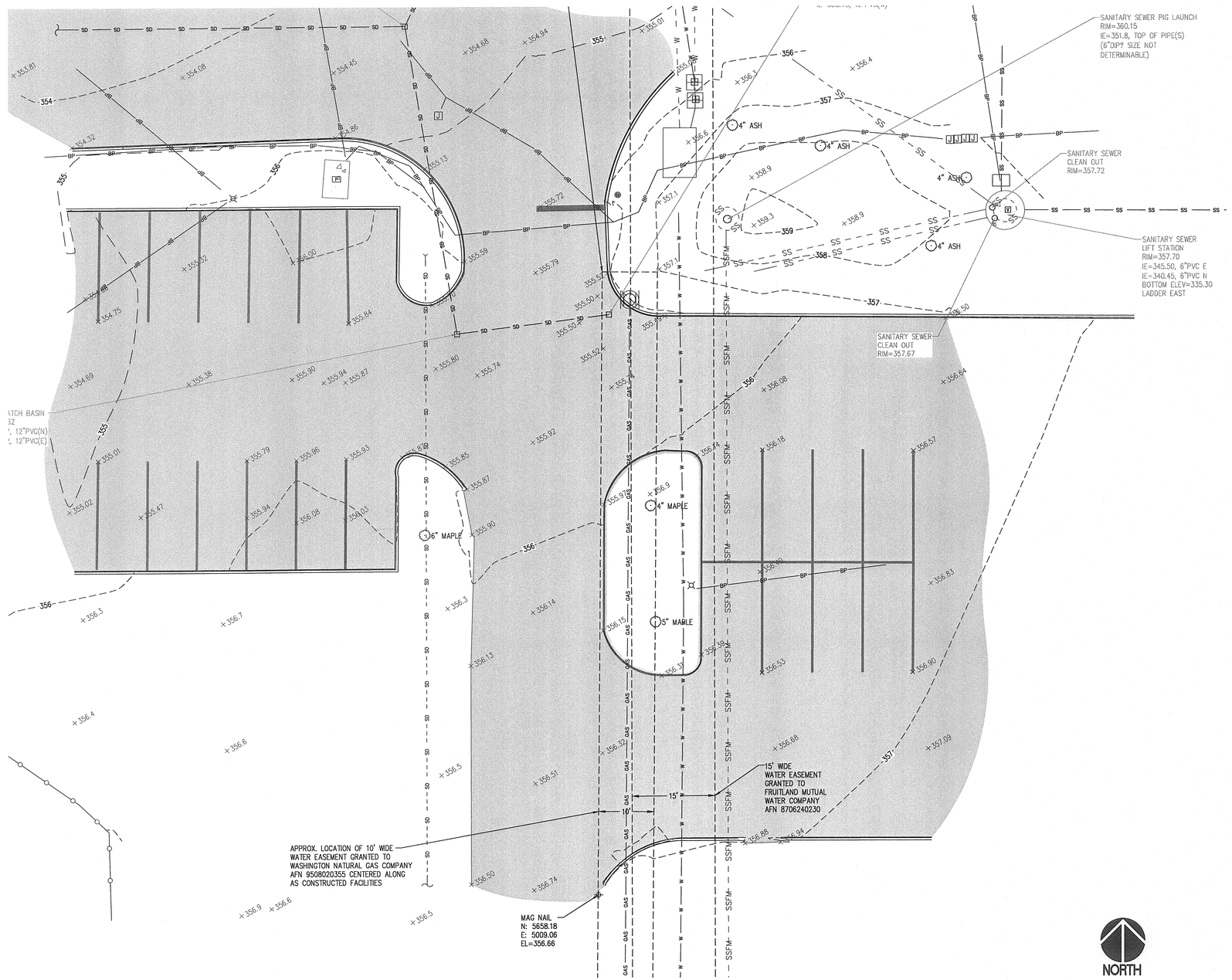

SURVEY BASE PLAN

SCALE: 1"=10'

APPROVED

BY _____
CITY OF PUYALLUP
ENGINEERING SERVICES

DATE 5-2-16

NOTE:
THIS APPROVAL IS VOID AFTER 1 YEAR FROM APPROVAL DATE.

THE CITY WILL NOT BE RESPONSIBLE FOR ERRORS AND/OR OMISSIONS ON THESE PLANS.

FIELD CONDITIONS MAY DICTATE CHANGES TO THESE PLANS AS DETERMINED BY THE ENGINEERING SERVICES MANAGER.

LEGEND

- SURVEY CONTROL POINT
- SANITARY SEWER MANHOLE
- SANITARY SEWER CLEAN OUT
- STORM CATCH BASIN
- WATER METER
- JUNCTION BOX
- POWER VAULT
- LIGHT POLE
- UTILITY VAULT
- TREE, AS NOTED
- BURIED POWER LINE
- BURIED WATER LINE
- BURIED STORM LINE
- BURIED SANITARY LINE
- CHAIN LINK FENCE
- BURIED STORM LINE, RECORD LOCATION
- BUIRIED GAS LINE, RECORD LOCATION
- BURIED WATER LINE, RECORD LOCATION
- BURIED SANITARY FORCEMAIN, RECORD LOCATION

HORIZONTAL DATUM

ASSUMED

SEE CONTROL POINTS LABELED HEREON FOR COORDINATE VALUES

VERTICAL DATUM

NGVD 29

SITE TBM:
MAG NAIL AT NORTH SIDE OF PARKING LOT
ELEVATION=354.36

TO CONVERT TO NAVD88 DATUM
ADD 3.58' TO ALL ELEVATION VALUES

SITE DATA

1. TAX PARCEL NO. 0419043117
2. ADDRESS: 1509 39TH AVE. S.W. PUYALLUP WA

NOTES

1. EQUIPMENT USED: TOPCON QS ROBOTIC TOTAL STATION
2. THIS SURVEY WAS PERFORMED BY FIELD TRAVERSE WITH THE FINAL RESULTS MEETING OR EXCEEDING THE CURRENT TRAVERSE STANDARDS CONTAINED IN W.A.C. 332-130-090. ALL MEASUREMENTS WERE MADE WITH A TOPCON QS ROBOTIC TOTAL STATION IN ACCORDANCE WITH THE EQUIPMENT MANUFACTURER'S SPECIFICATIONS.
3. NO BOUNDARY WORK WAS PERFORMED FOR THIS SURVEY.
4. FIELD WORK PERFORMED IN FEBRUARY 2016, UNDER SITTS & HILL JOB NUMBER 16785.500.
5. UTILITIES AS SHOWN HEREON ARE BASED ON FIELD SURVEY OBSERVATION OF UTILITY LOCATE SERVICES PERFORMED BY (COMPANY) IN (DATE) FOR THIS SURVEY. THIS HAS BEEN SUPPLEMENTED BY RECORD INFORMATION PROVIDED BY (AGENCY). RECORD UTILITY LINES SHOWN HEREON ARE DEPICTED WITH A DASHED LINETYPE AS SHOWN IN THE LEGEND. UTILITIES OTHER THAN SHOWN MAY EXIST ON THE SITE. THE SURVEYOR DOES NOT WARRANT THAT THE UNDERGROUND UTILITIES SHOWN ARE IN THE EXACT LOCATION INDICATED. THE SURVEYOR DOES CERTIFY THAT THEY ARE SHOWN AS ACCURATELY AS POSSIBLE FROM FIELD SURVEY AND PAINTED UTILITY LOCATE LINES. COLLECTION AND DEPICTION OF EXISTING SUBSURFACE UTILITY DATA IS CONSISTENT WITH QUALITY LEVEL (A,B,C,D) OF THE ASCE STANDARD GUIDELINES 38-02.
6. SOURCE OF RECORD UTILITIES FROM SITTS AND HILL DESIGN DRAWINGS (JOB #15231).

REVISIONS

PERMIT	04-28-2016

APPROVALS

DESIGNED	S.H.
DRAWN	J.B.
CHECKED	D.S.
DATE	04-06-2016
SCALE	AS NOTED

SEAL

MICHAEL A. MCEVILLY, STATE OF WASHINGTON, 48599, REGISTERED PROFESSIONAL LAND SURVEYOR, 04/28/2016

PREPARED BY

SITTS & HILL ENGINEERS, INC.
CIVIL ▪ STRUCTURAL ▪ SURVEYING
4815 CENTER STREET | TACOMA, WA 98409
PHONE: (253) 474-9449 | FAX: (253) 474-0153
http://www.sitts-hill-engineers.com/

PREPARED FOR

PUYALLUP SCHOOL DISTRICT NO. 3
323 12TH STREET N.W.
PUYALLUP, WASHINGTON 98371

PROJECT

TRANSPORTATION AND DRIVER TRAINING MODULAR BUILDING
PUYALLUP, WASHINGTON

SHEET TITLE

SURVEY BASE PLAN

SHEET NO.

C0.1
2 OF 11

PROJECT NO.

16785.50

P:\16700\16785\Drawings\16785.50 Driver Training Portable Project\16785.5 - c0.1.dwg last edited: 04/28/16 3:42pm by: sethlee

SOUTHWEST 1/4 OF SECTION 04, TOWNSHIP 19 NORTH, RANGE 4 EAST WILLAMETTE MERIDIAN

CALL 2 WORKING DAYS BEFORE YOU DIG
1-800-424-5555
UTILITIES UNDERGROUND LOCATION CENTER

THE BURIED UTILITIES ON THIS PROJECT ARE SHOWN IN THEIR APPROXIMATE LOCATION WHERE KNOWN. OTHER EXISTING BURIED UTILITIES MAY NOT BE SHOWN ON THESE PLANS. THE CONTRACTOR SHALL CONTACT ALL UTILITY COMPANIES AND HAVE THEIR LOCATION MARKED ON THE GROUND PRIOR TO CONSTRUCTION. THE CONTRACTOR WILL PROTECT, OR IMMEDIATELY REPAIR, ANY DAMAGED UTILITY "DISCOVERED" ON THIS PROJECT WITHOUT ADDITIONAL COSTS.

APPROVED

BY Colleen Harris
CITY OF PUYALLUP
ENGINEERING SERVICES

DATE 5.2.16

NOTE:
THIS APPROVAL IS VOID AFTER 1 YEAR FROM APPROVAL DATE.

THE CITY WILL NOT BE RESPONSIBLE FOR ERRORS AND/OR OMISSIONS ON THESE PLANS.

FIELD CONDITIONS MAY DICTATE CHANGES TO THESE PLANS AS DETERMINED BY THE ENGINEERING SERVICES MANAGER.

ABBREVIATIONS

ACP	ASBESTOS CEMENT PIPE
ABND	ABANDON
ALT	ALTERNATE
ASTM	AMERICAN SOCIETY FOR TESTING MATERIAL
&	AND
APPROX	APPROXIMATE
ASPH	ASPHALT
AC	ASPHALTIC CONCRETE
@	AT
AUX	AUXILIARY
AVG	AVERAGE
ADS	HDPE STORM PIPING TRADE NAME
BC	BOTTOM CURB, BACK CURB
B.M.	BENCH MARK
BET	BETWEEN
BITUM	BITUMINOUS
BOT	BOTTOM OF STRUCTURE
CPD	CAPPED
C.I.	CAST IRON
CB	CATCH BASIN
CEM	CEMENT
CG	CURB GRADE
CL OR ℄	CENTERLINE
CO	CLEANOUT
CONC	CONCRETE
COT	CITY OF TACOMA
CP	CONCRETE PIPE
COND	CONDUIT
CONST	CONSTRUCTION
CJ	CONSTRUCTION JOINT
CONT	CONTINUOUS
CONTR	CONTRACTOR
CMP	CORRUGATED METAL PIPE
C.R.	CRUSHED ROCK
CF OR CU.FT.	CUBIC FOOT
CSTC	CRUSHED SURFACING TOP COURSE
CY OR CU.YD.	CUBIC YARD
DIA OR ø	DIAMETER
DIM	DIMENSION
DI OR DIP	DUCTILE IRON PIPE
DN	DOWN
DS	DOWNSPOUT
DWG	DRAWING
D	STORM DRAIN
DEMO	DEMOLITION
E	EAST
EA	EACH
ELEC	ELECTRIC/ELECTRICAL
EL OR ELEV	ELEVATION
ETM	ELAPSED TIME METER
EQ	EQUAL
EQUIV	EQUIVALENT
EP	EDGE PAVEMENT
EXIST. OR EX.	EXISTING
EXJ	EXPANSION JOINT
ENGR	ENGINEER
EST	ESTIMATED
FD	FOOTING DRAIN
FF	FINISH FLOOR
FM	FORCE MAIN
FO	FIBER OPTIC
FIN	FINISHED
FT	FOOT (FEET)
FTG	FOOTING
FH	FIRE HYDRANT
F/L	FLOWLINE
FL	PETROLEM PIPELINE
G	GAS
GALV	GALVANIZED
GS	GALVANIZED STEEL
GND	GROUND
GR	GRADE
GG	GUTTER GRADE
H	HIGH
HDD	HORIZONTAL DIRECTIONAL DRILL
HDPE	HIGH DENSITY POLYETHYLENE PIPE
HP	HIGH POINT
HORIZ	HORIZONTAL
INV	INVERT
IE	INVERT ELEVATION
JT	JOINT
L	LENGTH
LB	POUND
LF	LINEAR FEET/FOOT
LIN	LINEAR
LO	LOW
LONGIT	LONGITUDE
LTG	LIGHTING
LT	LEFT
MB	MAILBOX
MH	MANHOLE
ME	MATCH EXISTING
MECH	MECHANICAL
MEMB	MEMBRANE
MAX	MAXIMUM
MIN	MINIMUM
MISC	MISCELLANEOUS
MUTCD	MANUAL ON UNIFORM TRAFFIC CONTROL DEVICES
N	NORTH
NE	NORTHEAST
NC	NORMALLY CLOSED
NTS	NOT TO SCALE
N.I.C.	NOT IN CONTRACT
NO.	NUMBER
NW	NORTHWEST
O.C.	ON CENTER
OSHA	OCCUPATIONAL SAFETY AND HEALTH ADMINISTRATION
P	PANEL, POLE
%	PERCENT
PP	POWER POLE
PAV	PAVEMENT
PCC	PORTLAND CEMENT CONCRETE
PCF	POUND PER CUBIC FOOT
PT	POINT
P.C.	POINT OF CURVATURE
P.V.C.	POINT OF CURVATURE – VERTICAL CURVE
P.V.T.	POINT OF TANGENCY – VERTICAL CURVE
P.I.	POINT OF INTERSECTION
P.V.I.	POINT OF INTERSECTION FOR VERTICAL CURVE
P.O.C.	POINT ON CURVE
P.R.C.	POINT OF REVERSE CURVE
P.T.	POINT OF TANGENCY
PREFAB	PREFABRICATED
PROJ	PROJECT
PSF	POUND PER SQUARE FOOT
PSI	POUND PER SQUARE INCH
PVC	POLYVINYL CHLORIDE
PVMT	PAVEMENT
R	RADIUS
RP	RADIUS POINT
RCP	REINFORCED CONCRETE PIPE
REQD	REQUIRED
REV	REVISION/REVISED
RGS	RIGID GALVANIZED STEEL
REF	REFERENCE
R/W	RUNWAY OR RIGHT OF WAY
RT	RIGHT
SCH	SCHEDULE
SD	STORM DRAIN
SECT	SECTION
SHT	SHEET
SL	SLOPE
S	SOUTH OR SANITARY SEWER
SPEC	SPECIFICATION(S)
SQ	SQUARE
SF	SQUARE FOOT/FEET
SI	SQUARE INCH/INCHES
SY	SQUARE YARD/YARDS
SIM.	SIMILAR
SAN OR SS	SANITARY SEWER
SDMH	STORM DRAIN MANHOLE
SSMH	SANITARY SEWER MANHOLE
STA	STATION
STM	STEAM
STL	STEEL
ST	STREET
STR	STRUCTURAL
STD	STANDARD
SWPP	STORMWATER POLLUTION PREVENTION
SW	SOUTHWEST
SE	SOUTHEAST
T	TELEPHONE
TAN	TANGENT
TEL	TELEPHONE
TEMP	TEMPORARY
T.E.	TOP ELEVATION
THRU	THROUGH
T.O.C.	TOP OF CONCRETE
T.O.P.	TOP OF PAVEMENT
T.P.	TURNING POINT
TR., TRANS	TRANSFORMER
TYP	TYPICAL
TC, T/C	TOP CURB
TW	TOP WALL/TOP WALK
UBC	UNIFORM BUILDING CODE
UMC	UNIFORM MECHANICAL CODE
UPC	UNIFORM PLUMBING CODE
VERT	VERTICAL
VOL	VOLUME
WO	WORK ORDER
WP	WEATHERPROOF
WWF	WELDED WIRE FABRIC
WT	WEIGHT
W	WATER
W	WEST
WISHA	WASHINGTON INDUSTRIAL SAFETY AND HEALTH ADMINISTRATION
WS	WATER SERVICE OR WATER SURFACE
WSDOE	WASHINGTON STATE DEPARTMENT OF ECOLOGY
WSDOT	WASHINGTON STATE DEPARTMENT OF TRANSPORTATION
XFMR	TRANSFORMER

LEGEND:

⌖	SURVEY CONTROL POINT
○	SANITARY SEWER MANHOLE
∘	SANITARY SEWER CLEAN OUT
□	STORM CATCH BASIN
⊞	WATER METER
[J]	JUNCTION BOX
[P]	POWER VAULT
☒	LIGHT POLE
[V]	UTILITY VAULT
(·)	TREE, AS NOTED
—BP——BP—	BURIED POWER LINE
— W — W — W — W —	BURIED WATER LINE
— SD — SD — SD —	BURIED STORM LINE
— SS — SS — SS —	BURIED SANITARY LINE
—o——o——o—	CHAIN LINK FENCE
- - - SD - - - SD - - - SD —	BURIED STORM LINE, RECORD LOCATION
— — GAS— — — GAS—	BUIRIED GAS LINE, RECORD LOCATION
— — W — — — W —	BURIED WATER LINE, RECORD LOCATION
— — — SSSFM— — —SSSFM—	BURIED SANITARY FORCEMAIN, RECORD LOCATION

GENERAL NOTES:

1. ALL WORK IN CITY RIGHT-OF-WAY WORK REQUIRES A PERMIT FROM THE CITY OF PUYALLUP. PRIOR TO ANY WORK COMMENCING, THE GENERAL CONTRACTOR SHALL ARRANGE FOR A PRECONSTRUCTION MEETING AT THE DEVELOPMENT SERVICES CENTER TO BE ATTENDED BY ALL CONTRACTORS THAT WILL PERFORM WORK SHOWN ON THE APPROVED ENGINEERING PLANS, REPRESENTATIVES FROM ALL APPLICABLE UTILITY COMPANIES, THE PROJECT OWNER AND APPROPRIATE CITY STAFF. CONTACT ENGINEERING SERVICES AT (253-841-5568) TO SCHEDULE THE MEETING. THE CONTRACTOR IS RESPONSIBLE TO HAVE THEIR OWN SET OF APPROVED PLANS AT THE MEETING.
2. AFTER COMPLETION OF ALL ITEMS SHOWN ON THESE PLANS AND BEFORE ACCEPTANCE OF THE PROJECT THE CONTRACTOR SHALL OBTAIN A 'PUNCH LIST" PREPARED BY THE CITY'S INSPECTOR DETAILING REMAINING ITEMS OF WORK TO BE COMPLETED. ALL ITEMS OF WORK SHOWN ON THESE PLANS SHALL BE COMPLETED TO THE SATISFACTION OF THE CITY PRIOR TO ACCEPTANCE OF THE WATER SYSTEM AND SIDE SEWER SERVICE.
3. ALL MATERIALS AND WORKMANSHIP SHALL CONFORM TO THE STANDARD SPECIFICATIONS FOR ROAD, BRIDGE, AND MUNICIPAL CONSTRUCTION (HEREINAFTER REFERRED TO AS THE "STANDARD SPECIFICATIONS"), WASHINGTON STATE DEPARTMENT OF TRANSPORTATION AND AMERICAN PUBLIC WORKS ASSOCIATION, WASHINGTON STATE CHAPTER, LATEST EDITION, UNLESS SUPERSEDED OR AMENDED BY THE CITY OF PUYALLUP CITY STANDARDS FOR PUBLIC WORKS ENGINEERING AND CONSTRUCTION (HEREINAFTER REFERRED TO AS THE "CITY STANDARDS").
4. A COPY OF THESE APPROVED PLANS AND APPLICABLE CITY DEVELOPER SPECIFICATIONS AND DETAILS SHALL BE ON SITE DURING CONSTRUCTION.
5. ANY REVISIONS MADE TO THESE PLANS MUST BE REVIEWED AND APPROVED BY THE DEVELOPER'S ENGINEER AND THE CITY PRIOR TO ANY IMPLEMENTATION IN THE FIELD. THE CITY SHALL NOT BE RESPONSIBLE FOR ANY ERRORS AND/OR OMISSIONS ON THESE PLANS.
6. THE CONTRACTOR SHALL HAVE ALL UTILITIES VERIFIED ON THE GROUND PRIOR TO ANY CONSTRUCTION. CALL (811) AT LEAST TWO WORKING DAYS IN ADVANCE. THE OWNER AND HIS/HER ENGINEER SHALL BE CONTACTED IMMEDIATELY IF A CONFLICT EXISTS.
7. ANY STRUCTURE AND/OR OBSTRUCTION THAT REQUIRES REMOVAL OR RELOCATION RELATING TO THIS PROJECT SHALL BE DONE SO AT THE DEVELOPER'S EXPENSE.
8. LOCATIONS OF EXISTING UTILITIES ARE APPROXIMATE. IT SHALL BE THE CONTRACTOR'S RESPONSIBILITY TO DETERMINE THE TRUE ELEVATIONS AND LOCATIONS OF HIDDEN UTILITIES. ALL VISIBLE ITEMS SHALL BE THE ENGINEER'S RESPONSIBILITY.
9. THE CONTRACTOR SHALL INSTALL, REPLACE, OR RELOCATE ALL SIGNS, AS SHOWN ON THE PLANS OR AS AFFECTED BY CONSTRUCTION, PER CITY STANDARDS.
10. POWER, STREET LIGHT, CABLE, AND TELEPHONE LINES SHALL BE IN A TRENCH LOCATED WITHIN A 10-FOOT UTILITY EASEMENT ADJACENT TO PUBLIC RIGHT-OF-WAY. RIGHT-OF-WAY CROSSINGS SHALL HAVE A MINIMUM HORIZONTAL SEPARATION FROM OTHER UTILITIES (SEWER, WATER, AND STORM) OF 5 FEET.
11. ALL CONSTRUCTION SURVEYING FOR EXTENSIONS OF PUBLIC FACILITIES SHALL BE DONE UNDER THE DIRECTION OF A WASHINGTON STATE LICENSED LAND SURVEYOR OR A WASHINGTON STATE LICENSED PROFESSIONAL CIVIL ENGINEER.
12. DURING CONSTRUCTION, ALL PUBLIC STREETS ADJACENT TO THIS PROJECT SHALL BE KEPT CLEAN OF ALL MATERIAL DEPOSITS RESULTING FROM ON-SITE CONSTRUCTION, AND EXISTING STRUCTURES SHALL BE PROTECTED AS DIRECTED BY THE CITY.
13. CERTIFIED RECORD DRAWINGS ARE REQUIRED PRIOR TO PROJECT ACCEPTANCE.
14. IT IS THE CONTRACTORS RESPONSIBILITY TO INQUIRE AS TO WHETHER A NPDES STORMWATER GENERAL PERMIT IS REQUIRED BY THE DEPARTMENT OF ECOLOGY FOR THIS PROJECT. FOR INFORMATION CONTACT THE DEPARTMENT OF ECOLOGY, SOUTHWEST REGION OFFICE AT (360)407-6300.
15. ANY DISTURBANCE OR DAMAGE TO CRITICAL AREAS AND ASSOCIATED BUFFERS, OR SIGNIFICANT TREES DESIGNATED FOR PRESERVATION AND PROTECTION SHALL BE MITIGATED IN ACCORDANCE WITH A MITIGATION PLAN REVIEWED AND APPROVED BY THE CITY'S PLANNING DIVISION. PREPARATION AND IMPLEMENTATION OF THE MITIGATION PLAN SHALL BE AT THE DEVELOPER'S EXPENSE.

CONSTRUCTION SEQUENCE

1. FLAG OR OTHERWISE MARK THE LIMITS OF CONSTRUCTION.
2. POST SIGN WITH NAME AND PHONE NUMBER OF SUPERVISOR.
3. INSTALL SEDIMENT AND EROSION CONTROL BMPS, AS REQUIRED.
4. INSTALL PORTABLE BUILDING AND UTILITIES.
5. MAINTAIN EROSION CONTROL MEASURES IN ACCORDANCE WITH THE MANUFACTURER'S RECOMMENDATIONS THROUGHOUT CONSTRUCTION.
6. CLEAN THE COMPLETED PROJECT AREA AND CONVEYANCE SYSTEM AS REQUIRED.
7. REMOVE ANY TEMPORARY BMPS.

REVISIONS
PERMIT 04-28-2016

APPROVALS
DESIGNED S.H.
DRAWN J.B.
CHECKED R.H.
DATE 04-06-2016
SCALE AS NOTED

SEAL
RICHARD C. HAND, STATE OF WASHINGTON, 26780, REGISTERED PROFESSIONAL ENGINEER 04/28/16

PREPARED BY
SITTS & HILL ENGINEERS, INC.
CIVIL ▪ STRUCTURAL ▪ SURVEYING
4815 CENTER STREET | TACOMA, WA. 98409
PHONE: (253) 474-9449 | FAX: (253) 474-0153
http://www.sitts-hill-engineers.com/

PREPARED FOR
PUYALLUP SCHOOL DISTRICT NO. 3
323 12TH STREET N.W.
PUYALLUP, WASHINGTON 98371

PROJECT
TRANSPORTATION AND DRIVER TRAINING MODULAR BUILDING
PUYALLUP, WASHINGTON

SHEET TITLE
ABBREVIATIONS, LEGEND AND NOTES

SHEET NO.
C0.2
3 OF 11

PROJECT NO.
16785.50

P:\16700\16785\Drawings\16785.50 Driver Training Portable Project\16785.5 - c0.2.dwg last edited: 04/28/16 3:47pm by: watkinsj

SOUTHWEST 1/4 OF SECTION 04, TOWNSHIP 19 NORTH, RANGE 4 EAST WILLAMETTE MERIDIAN

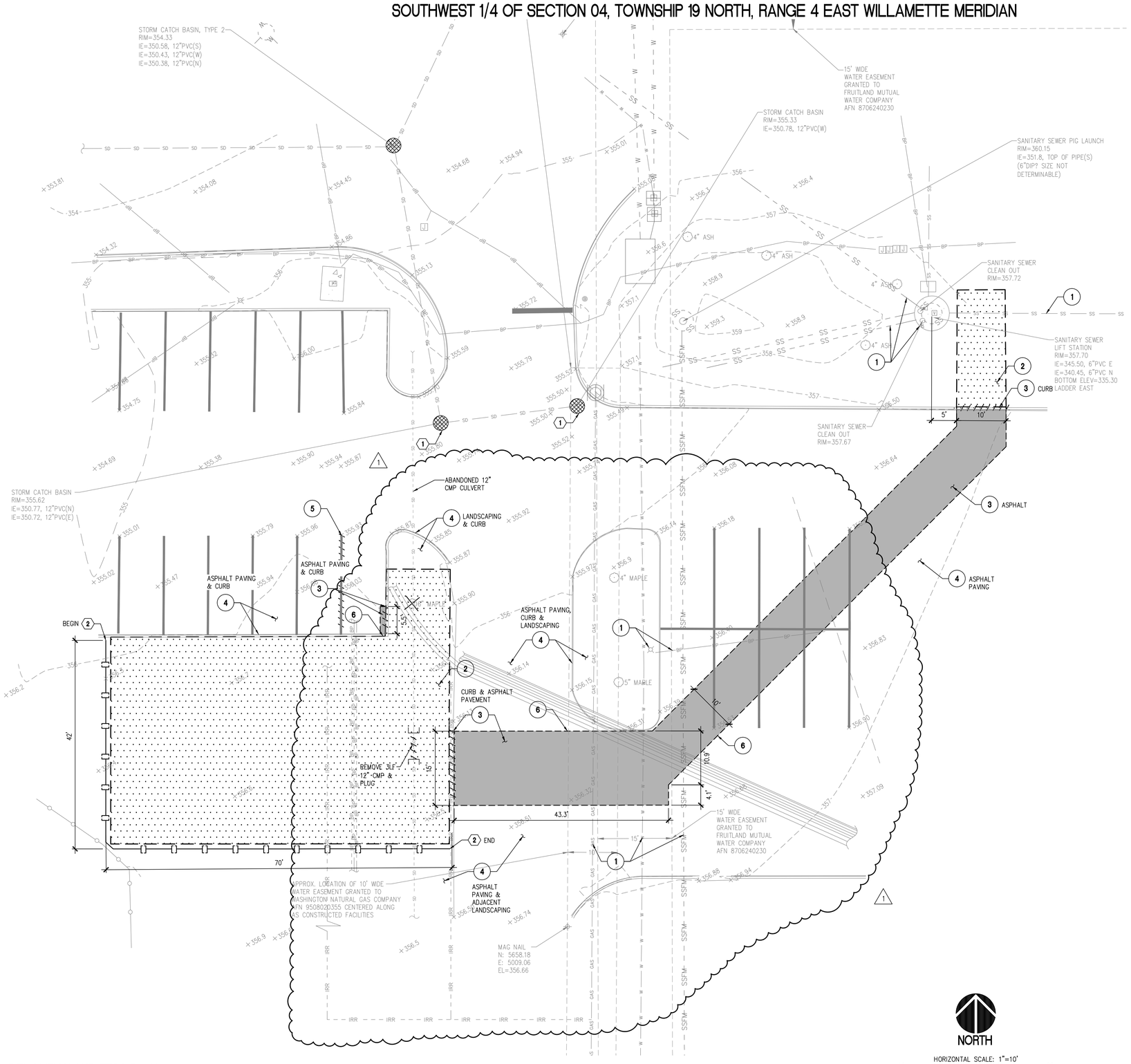

DEMOLITION AND TESC PLAN

SCALE: 1"=10'

CALL 2 WORKING DAYS BEFORE YOU DIG
1-800-424-5555
UTILITIES UNDERGROUND LOCATION CENTER

THE BURIED UTILITIES ON THIS PROJECT ARE SHOWN IN THEIR APPROXIMATE LOCATION WHERE KNOWN. OTHER EXISTING BURIED UTILITIES MAY NOT BE SHOWN ON THESE PLANS. THE CONTRACTOR SHALL CONTACT ALL UTILITY COMPANIES AND HAVE THEIR LOCATION MARKED ON THE GROUND PRIOR TO CONSTRUCTION. THE CONTRACTOR WILL PROTECT, OR IMMEDIATELY REPAIR, ANY DAMAGED UTILITY "DISCOVERED" ON THIS PROJECT WITHOUT ADDITIONAL COSTS.

@00QNUDC

BY _____
CITY OF PUYALLUP
ENGINEERING SERVICES

DATE _____

NOTE:
THIS APPROVAL IS VOID AFTER 1 YEAR FROM APPROVAL DATE.

THE CITY WILL NOT BE RESPONSIBLE FOR ERRORS AND/OR OMISSIONS ON THESE PLANS.

FIELD CONDITIONS MAY DICTATE CHANGES TO THESE PLANS AS DETERMINED BY THE ENGINEERING SERVICES MANAGER.

LEGEND

PROPOSED FEATURES-

- CATCH BASIN PROTECTION
- SILT FENCE
- DEMO SITE FEATURE
- CLEARING LIMITS
- SAWCUT LINE
- LANDSCAPING REMOVAL
- ASPHALT PAVEMENT REMOVAL
- TREE REMOVAL

GENERAL NOTES

1. CONTRACTOR TO INSTALL TEMPORARY FENCING/PLATES TO COVER TRENCH WHEN NOT BEING CONSTRUCTED.
2. CONTRACTOR TO PROTECT EXISTING FEATURE BEYOND THE LIMITS OF WORK AND REPAIR ANY DAMAGE AT NO ADDITIONAL COST.
3. SEE ELECTRICAL PLANS FOR POWER AND LOW VOLTAGE CONNECTIONS. TRENCHING MAY BE REQUIRED.
4. CONTRACTOR SHALL MAINTAIN EMERGENCY VEHICLE ACCESS AND KEEP CLEAR AT ALL TIMES DURING CONSTRUCTION.
5. CONTRACTOR SHALL FIELD VERIFY EXISTING CONDITIONS AND NOTIFY ENGINEER IMMEDIATELY IF THERE ARE ANY DISCREPANCIES AFFECTING THE NEW CONSTRUCTION.
6. THE BURIED UTILITIES ON THIS PROJECT ARE SHOWN IN THEIR APPROXIMATE LOCATION WHERE KNOWN. OTHER EXISTING BURIED UTILITIES MAY NOT BE SHOWN ON THESE PLANS. THE CONTRACTOR SHALL CONTACT ALL UTILITY COMPANIES AND HAVE THEIR LOCATION MARKED ON THE GROUND PRIOR TO CONSTRUCTION. THE CONTRACTOR WILL PROTECT, OR IMMEDIATELY REPAIR, ANY DAMAGED UTILITY "DISCOVERED" ON THIS PROJECT WITHOUT ADDITIONAL COSTS.
7. SEE SHEET C1.1 FOR CITY OF PUYALLUP SPECIFIC STANDARD GRADING, EROSION AND SEDIMENTATION CONTROL NOTES AND PROJECT DEMOLITION AND TESC NOTES AND DETAILS.

DEMOLITION KEY NOTES:

1. EXISTING UTILITIES TO REMAIN. CONTRACTOR TO PROTECT DURING CONSTRUCTION.
2. REMOVE EXISTING TOPSOIL AT A MIN. OF 6" DEPTH AND DISPOSE OF OFF-SITE.
3. DEMOLISH AS NOTED, DISPOSE OF AT AN APPROVED OFF-SITE FACILITY.
4. PROTECT EXISTING FEATURE TO REMAIN, AS NOTED.
5. REMOVE EXISTING PAVEMENT PAINT.
6. SAWCUT ASPHALT TO SMOOTH UNYIELDING EDGE TO FULL DEPTH.

EROSION CONTROL KEY NOTES:

1. INSTALL CB PROTECTION IN NEW AND EXISTING CATCH BASINS WHERE SHOWN, SEE DETAIL 1/C1.1.
2. INSTALL SILT FENCE PER DETAIL 2/C1.1.

1 RECORD DRAWINGS
INFORMATION PROVIDED BY CONTRACTOR.

REVISIONS

1	RECORD DRAWING	06-20-2016
	PERMIT	04-28-2016

APPROVALS

DESIGNED	S.H.
DRAWN	J.B.
CHECKED	R.H.
DATE	04-06-2016
SCALE	AS NOTED

SEAL

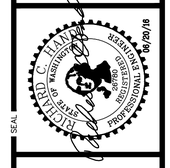

PREPARED BY

SITTS & HILL ENGINEERS, INC.
CIVIL ▪ STRUCTURAL ▪ SURVEYING
4815 CENTER STREET | TACOMA, WA. 98409
PHONE: (253) 474-9449 | FAX: (253) 474-0153
http://www.sitts-hill-engineers.com/

PREPARED FOR

PUYALLUP SCHOOL DISTRICT NO. 3
323 12TH STREET N.W.
PUYALLUP, WASHINGTON 98371

PROJECT
TRANSPORTATION AND DRIVER TRAINING MODULAR BUILDING
PUYALLUP, WASHINGTON

SHEET TITLE
DEMOLITION AND TESC PLAN

SHEET NO.
C10
4 OF 11
PROJECT NO.
16785.50

P:\16700\16785\Drawings\16785.50 Driver Training Portable Project\16785.5 - c10.dwg last edited: 06/20/16 3:21pm by: wesites]

SOUTHWEST 1/4 OF SECTION 04, TOWNSHIP 19 NORTH, RANGE 4 EAST WILLAMETTE MERIDIAN

STANDARD EROSION CONTROL NOTES

1. ON-SITE EROSION CONTROL MEASURES SHALL BE THE RESPONSIBILITY OF THE CONTRACTOR. ANY PROBLEMS OCCURRING BEFORE FINAL ACCEPTANCE OF THE STORM SYSTEM BY THE MUNICIPALITY SHALL BE CORRECTED BY THE APPLICANT AND/OR THE CONTRACTOR.
2. IN CASE EROSION OR SEDIMENTATION OCCURS TO ADJACENT PROPERTY, ALL CONSTRUCTION WORK WITHIN THE DEVELOPMENT THAT WILL AGGRAVATE THE SITUATION MUST CEASE AND THE APPLICANT/CONTRACTOR SHALL IMMEDIATELY COMMENCE RESTORATION OR MITIGATION METHODS. RESTORATION ACTIVITY WILL CONTINUE UNTIL SUCH TIME AS THE PROBLEM IS RECTIFIED.
3. ALL EROSION AND SEDIMENTATION CONTROL DEVICES SHOWN ON THIS DRAWING SHALL BE INSTALLED PRIOR TO OR AS THE FIRST STAGE OF SITE PREPARATION.
4. SHOULD THE TEMPORARY EROSION AND SEDIMENTATION CONTROL MEASURES AS SHOWN ON THIS DRAWING NOT PROVE ADEQUATE TO CONTROL EROSION AND SEDIMENTATION, THE CONTRACTOR SHALL INSTALL ADDITIONAL FACILITIES/EMERGENCY MEASURES AS NECESSARY (AT NO ADDITIONAL COST TO THE OWNER) TO PROTECT ADJACENT PROPERTIES, SENSITIVE AREAS, NATURAL WATER COURSES AND/OR STORM DRAINAGE SYSTEMS. THE ENGINEER OR CITY OF PUYALLUP INSPECTOR CAN RESERVE THE RIGHT TO REQUEST ADDITIONAL TESC MEASURES BE INSTALLED ANYTIME DURING CONSTRUCTION AS NEEDED (AT NO ADDITIONAL COST TO THE OWNER).
5. IN ANY AREA WHICH HAS BEEN STRIPPED OF VEGETATION OR EXPERIENCED LAND DISTURBING ACTIVITIES AND WHERE NO FURTHER WORK IS ANTICIPATED FOR A PERIOD EXCEEDING THE LISTED CRITERIA, ALL DISTURBED AREAS MUST BE IMMEDIATELY STABILIZED WITH MULCHING, GRASS PLANTING OR OTHER APPROVED EROSION CONTROL TREATMENT APPLICABLE TO THE TIME OF YEAR IN QUESTION. GRASS SEEDING ALONE WILL BE ACCEPTABLE ONLY DURING THE MONTHS OF APRIL THROUGH SEPTEMBER INCLUSIVE. SEEDING MAY PROCEED, HOWEVER, WHENEVER IT IS THE INTEREST OF THE APPLICANT/CONTRACTOR, BUT MUST BE AUGMENTED WITH MULCHING.
6. THE CONTRACTOR SHALL BE RESPONSIBLE FOR FIELD LOCATING THE CLEARING LIMITS AND ESTABLISHING THOSE BOUNDARIES WITH BRIGHT COLORED FLAGGING. THE CONTRACTOR SHALL CLEAR TO THE LIMITS AS ESTABLISHED ON THIS PLAN AND AS FLAGGED IN THE FIELD.
7. THE CITY OF PUYALLUP SHALL BE RESPONSIBLE FOR THE INSPECTION AND ACCEPTANCE OF ALL CLEARING AND GRADING WORK AND EROSION AND SEDIMENTATION CONTROL FACILITIES. THE APPLICANT AND/OR CONTRACTOR SHALL NOTIFY THE CITY OF PUYALLUP FORTY-EIGHT HOURS IN ADVANCE OF EACH REQUIRED EROSION AND SEDIMENT CONTROL INSPECTION.

INSPECTION NO. 1 –	INSTALLATION OF EROSION CONTROL FACILITIES/PRIOR TO CLEARING.
INSPECTION NO. 2 –	COMPLETION OF CLEARING.
INSPECTION NO. 3 –	UPON COMPLETION OF EXCAVATION FILLING AND EARTHWORK.
INSPECTION NO. 4 –	COMPLETION OF PROJECT.
INSPECTION NO. 5 –	AS NEEDED TO DETERMINE COMPLIANCE WITH APPROVED PLANS AND/OR SPECIFICATIONS. (DOES NOT REQUIRE ADVANCE NOTICE.)

8. ALL WORK ASSOCIATED WITH STABILIZING THE DISTURBED AREAS SHALL BE IN ACCORDANCE WITH THE 2005 DEPARTMENT OF ECOLOGY SURFACE WATER MANAGEMENT MANUAL.
9. ALL NECESSARY FACILITIES SHALL BE MAINTAINED ON SITE TO PREVENT DEBRIS, DUST AND MUD FROM ACCUMULATING ON THE PUBLIC RIGHT-OF-WAY.

SEEDING NOTES

1. SEED MIXTURES SHALL BE PER THE "SEED MIXTURE FOR EROSION CONTROL" TABLE BELOW, AND SHALL BE APPLIED AT THE RATE OF 80 LB. PER ACRE.
2. SEED BEDS PLANTED BETWEEN MAY 1 AND OCTOBER 31 WILL REQUIRE IRRIGATION AND OTHER MAINTENANCE AS NECESSARY TO FOSTER AND PROTECT THE ROOT STRUCTURE.
3. FOR SEED BEDS PLANTED BETWEEN OCTOBER 31 AND APRIL 30, ARMORING OF THE SEED BED WILL BE NECESSARY (E.G. GEOTEXTILES, JUTE MAT, CLEAR PLASTIC COVERING).
4. BEFORE SEEDING, INSTALL NEEDED SURFACE RUNOFF CONTROL MEASURES SUCH AS GRADIENT TERRACES, INTERCEPTOR DIKES, SWALES, LEVEL SPREADERS, AND SEDIMENT BASINS.
5. THE SEED BED SHALL BE FIRM WITH A FAIRLY FINE SURFACE, FOLLOWING SURFACE ROUGHENING. PERFORM ALL OPERATIONS ACROSS OR AT RIGHT ANGLES TO THE SLOPE.
6. FERTILIZERS ARE TO BE USED ACCORDING TO SUPPLIERS RECOMMENDATIONS. AMOUNTS USED SHOULD BE MINIMIZED, ESPECIALLY ADJACENT TO WATER BODIES AND WETLANDS.
7. SEED SHALL NOT BE USED IN AREAS SUBJECT TO WEAR BY CONSTRUCTION TRAFFIC.
8. APPLICABLE IN AREAS OF 10% OR LESS SLOPE FOR A MAXIMUM HORIZONTAL DISTANCE OF 100 FEET. IN STEEPER AREAS (<10% SLOPE), USE MULCH, NETTING, OR OTHER TREATMENTS SPECIFICALLY DESIGNED FOR STEEPER AND LONGER SLOPES.

SEED MIXTURE FOR EROSION CONTROL

NAME	PROPORTIONS BY WEIGHT	PERCENT PURITY	PERCENT GERMINATION
REDTOP (AGROSTIS ALBA)	10%	92%	90%
ANNUAL RYE (LOLIUM MULTIFLORUM)	40%	98%	90%
CHEWING FESCUE (FESTUCA RUBRA COMMUTATA), JAMESTOWN BANNER, SHODOW, OR KOKET	40%	97%	80%
WHITE DUTCH CLOVER (TRIFOLIUM REPENS)	10%	96%	90%

DEMOLITION NOTES

1. REMOVE ALL DELETERIOUS MATERIAL FOUND ON-SITE INCLUDING VEGETATION, SCRAP WOOD, TRASH, ETC. AND DISPOSE OF AT AN APPROVED OFF-SITE LOCATION.
2. AT ALL TIMES THE CONTRACTOR SHALL MAINTAIN SIGNS, BARRICADES, FENCING, OR OTHER MEASURES TO ENSURE CONTINUOUS PROTECTION OF THE PUBLIC AND TO PREVENT UNAUTHORIZED ENTRY TO THE CONSTRUCTION AREA. AT A MINIMUM FENCING SHALL BE 6.0 FEET HIGH.
3. PUBLIC SAFETY AND TRAFFIC CONTROL SHALL BE PROVIDED IN ACCORDANCE WITH CITY OF PUYALLUP REQUIREMENTS. SAFE VEHICULAR AND PEDESTRIAN ACCESS SHALL BE PROVIDED AT ALL TIMES DURING CONSTRUCTION. THE CONTRACTOR IS RESPONSIBLE FOR PROVIDING ALL TRAFFIC CONTROL SIGNS.
4. THE CONTRACTOR IS FINANCIALLY RESPONSIBLE FOR THE MAINTENANCE OR REPAIR OF OFF-SITE AND ON-SITE PAVED SURFACES WHERE DAMAGE HAS BEEN SUSTAINED BECAUSE OF THE DEVELOPMENTS CONSTRUCTION TRAFFIC.
5. DISPOSE OF ALL DEMOLITION WASTE MATERIALS AT APPROVED DISPOSAL SITES.

MAY 1ST TO SEPTEMBER 30TH (DRY SEASON)

THE CLEARING OF LAND, INCLUDING THE REMOVAL OF EXISTING VEGETATION OR OTHER GROUND COVER, MUST BE LIMITED TO ONLY AS MUCH LAND AREA AS CAN RECEIVE APPROPRIATE PROTECTIVE COVER OR BE OTHERWISE STABILIZED AFTER HAVING BEEN CLEARED OR OTHERWISE DISTURBED BY NO LATER THAN SEPTEMBER 30TH OF A GIVEN YEAR. UNLESS IMMEDIATE STABILIZATION IS SPECIFIED IN THE EROSION AND SEDIMENTATION CONTROL PLAN, ALL AREAS CLEARED OR OTHERWISE DISTURBED MUST BE APPROPRIATELY STABILIZED THROUGH THE USE OF MULCHING, NETTING, PLASTIC SHEETING, EROSION BLANKETS, FREE DRAINING MATERIALS, ETC..., BY SEPTEMBER 30TH.

UNLESS OTHERWISE APPROVED BY THE CITY, SEEDING, FERTILIZING AND MULCHING OR CLEARED OR OTHERWISE DISTURBED AREAS SHALL BE PERFORMED DURING THE FOLLOWING PERIODS: MARCH 1ST THROUGH MAY 15TH AND AUGUST 15TH THROUGH OCTOBER 1ST. SEEDING AFTER OCTOBER 1ST WILL BE DONE WHEN PHYSICAL COMPLETION OF THE PROJECT IS IMMINENT AND THE ENVIRONMENTAL CONDITIONS ARE CONDUCIVE TO SATISFACTORY GROWTH. IN THE EVENT THAT PROJECT STABILIZATION IS NOT POSSIBLE, AN ALTERNATIVE METHOD OF GROUND COVER (SUCH AS MULCHING, NETTING, PLASTIC SHEETING, EROSION BLANKETS, ETC...,) MUST BE INSTALLED BY NO LATER THAN SEPTEMBER 30TH.

IN THE EVENT THAT CONSTRUCTION ACTIVITIES OR OTHER SITE DEVELOPMENT ACTIVITIES ARE DISCONTINUED FOR FOUR CONSECUTIVE DAYS OR MORE, THE CONTRACTOR SHALL BE RESPONSIBLE FOR THE INSPECTION OF ALL EROSION AND SEDIMENTATION CONTROL FACILITIES IMMEDIATELY AFTER STORM EVENTS AND AT LEAST ONCE EVERY WEEK. THE CONTRACTOR SHALL BE RESPONSIBLE TO THE MAINTENANCE AND REPAIR OF ALL EROSION AND SEDIMENTATION CONTROL FACILITIES.

THE CONTRACTOR SHALL PROVIDE MATERIALS ONSITE READILY AVAILABLE TO IMMEDIATELY STABILIZE DENUDED AREAS DURING PERIODS OF INCLEMENT WEATHER WHICH RESULT IN EROSION AND SEDIMENT TRANSPORT OFFSITE.

THE CONTRACTOR SHALL ENSURE THE PROPER CONTINUED FUNCTIONING OF THE ESC FACILITIES BY PROMPT CLEANING AND MAINTENANCE AFTER EACH EROSION AND SEDIMENT PRODUCING RAINFALL EVENT.

OCTOBER 1ST TO APRIL 30TH (WET SEASON)

ON SITES WHERE UNINTERRUPTED CONSTRUCTION ACTIVITY IS IN PROGRESS, THE CLEARING OF LAND, INCLUDING THE REMOVAL OF EXISTING VEGETATION OR OTHER GROUND COVER, SHALL BE LIMITED TO ONLY AS MUCH LAND AREA AS CAN BE COVERED OR STABILIZED WITHIN 24 HOURS IN THE EVENT A MAJOR STORM IS PREDICTED AND/OR EROSION/SEDIMENT TRANSPORT OFFSITE IS OBSERVED.

ADDITIONALLY, ALL CLEARED OR DISTURBED AREAS WILL RECEIVE APPROPRIATE PROTECTIVE COVER OR BE OTHERWISE STABILIZED (SUCH AS MULCHING, NETTING, PLASTIC SHEETING, EROSION BLANKETS, FREE DRAINING MATERIAL, ETC...,) WITHIN FIVE DAYS AFTER HAVING BEEN CLEARED OR OTHERWISE DISTURBED IF NOT BEING ACTIVELY WORKED. FILTER FABRIC FENCING, SEDIMENT TRAPS, SEDIMENT PONDS, ETC..., WILL NOT BE VIEWED AS ADEQUATE COVER IN AND OF THEMSELVES. IN THE EVENT THAT ANY LAND AREA NOT BEING ACTIVELY WORKED REMAINS UNPROTECTED OR HAS NOT BEEN APPROPRIATELY STABILIZED FIVE DAYS AFTER HAVING BEEN CLEARED, ALL CONSTRUCTION ACTIVITY ON THE SITE, EXCEPT FOR APPROVED EROSION AND SEDIMENTATION CONTROL ACTIVITY, SHALL IMMEDIATELY CEASE UNTIL SUCH A TIME AS SAID LAND HAS BEEN APPROPRIATELY PROTECTED OR STABILIZED.

THE CONTRACTOR SHALL AT ALL TIMES HAVE AVAILABLE FOR THE PROJECT SUFFICIENT QUANTITIES OF PROTECTIVE COVERING MATERIALS TO IMMEDIATELY STABILIZE ALL DISTURBED AREAS IN CASE THE PROJECT ENGINEER OR COUNTY DIRECTS THEM TO COVER DUE TO OBSERVED MIGRATION OF SOILS OR INCLEMENT WEATHER.

TOPSOIL STOCKPILE NOTES

1. STOCKPILES SHALL BE STABILIZED (WITH PLASTIC COVERING OR OTHER APPROVED DEVICE) DAILY BETWEEN NOVEMBER 1 AND MARCH 31.
2. IN ANY SEASON, SEDIMENT LEACHING FROM STOCKPILES MUST BE PREVENTED.
3. TOPSOIL SHALL NOT BE PLACED WHILE IN A FROZEN OR MUDDY CONDITION, WHEN THE SUBGRADE IS EXCESSIVELY WET, OR WHEN CONDITIONS EXIST THAT MAY OTHERWISE BE DETRIMENTAL TO PROPER GRADING OR PROPOSED SODDING AND SEEDING.
4. PREVIOUSLY ESTABLISHED GRADES ON THE AREAS TO BE TOPSOILED SHALL BE MAINTAINED ACCORDING TO THE APPROVED PLAN.

CATCH BASIN PROTECTION NOTES

1. CATCH BASIN INSERTS SHALL BE PROVIDED IN THE CATCH BASINS NOTED ON THE PLANS.
2. AT ALL PROPOSED CATCH BASINS, CATCH BASIN PROTECTION SHALL BE INSTALLED IMMEDIATELY UPON CATCH BASIN INSTALLATION AND SHALL REMAIN UNTIL FINAL SITE STABILIZATION.
3. CATCH BASIN INSERT SHALL BE BOWHEAD STREAMGUARD CATCH BASIN INSERT #3003, ADVANCED ENVIRONMENTAL SOLUTIONS DRAINGUARD CATCH BASIN FILTER INSERT #11091U, OR APPROVED EQUAL.
4. CATCH BASIN INSERTS SHALL BE INSTALLED IN ACCORDANCE WITH MANUFACTURER'S RECOMMENDATIONS.
5. CATCH BASIN INSERTS WILL BE REMOVED FOLLOWING COMPLETION OF CONSTRUCTION AND STABILIZATION OF ALL CLEARED AREAS.

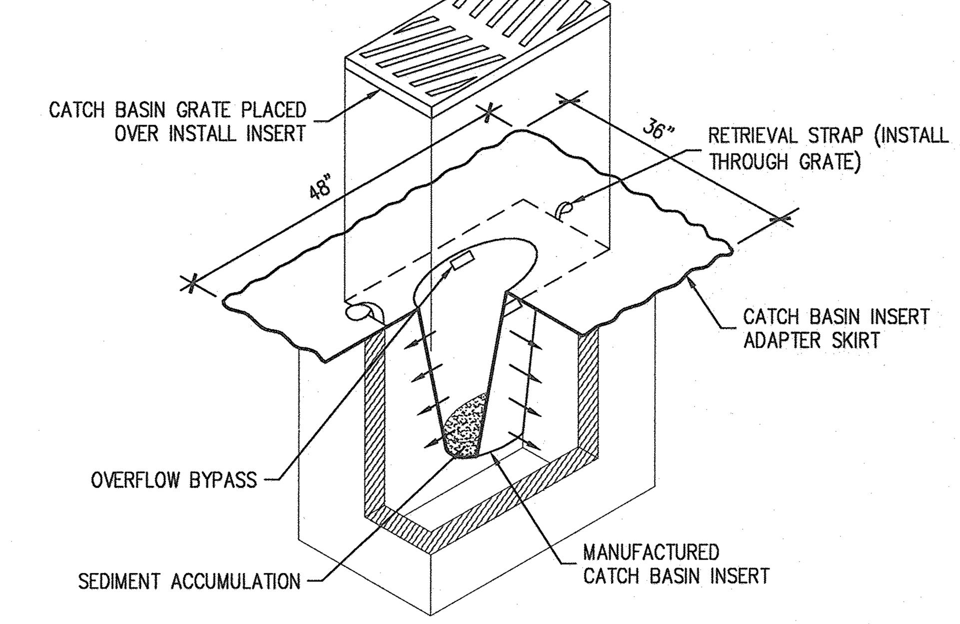

(1) CATCH BASIN PROTECTION
SCALE: N.T.S.

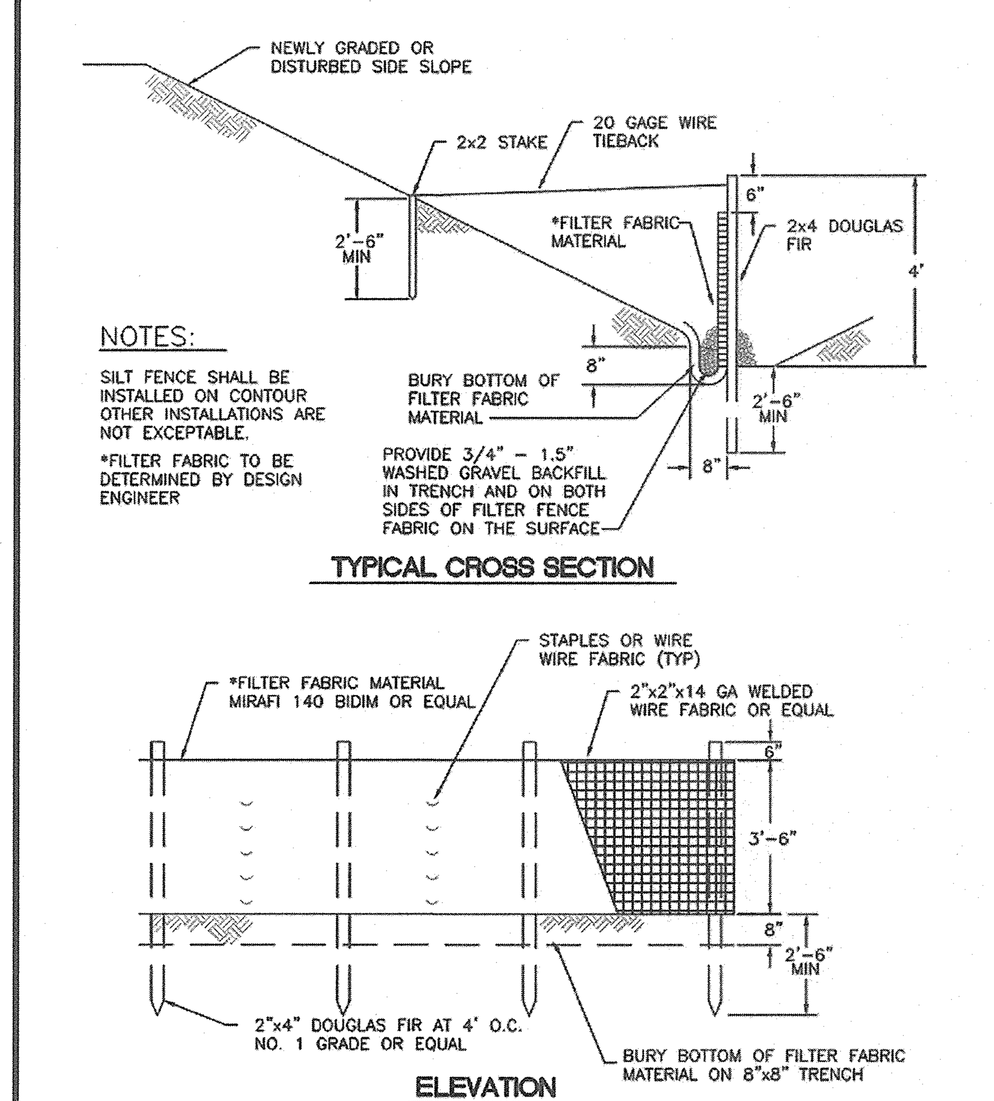

CITY OF PUYALLUP — DEVELOPMENT ENGINEERING and PUBLIC WORKS DEPARTMENTS

SILTATION FENCE

DRAWN BY	CHECKED BY	APPROVED BY	REVISED BY	CITY STANDARD
LINDA LANSING	LINDA LIAN	COLLEEN HARRIS	XXXX	02.03.02
FILE NAME: F:\DWG\COMMON\STDS\CITY\2009\02_SD-02.03.02		DATE APPROVED 06/01/1992	DATE REVISED 06/01/2003	SCALE NTS

(2) SILTATION FENCE
SCALE: N.T.S.

1. ALL LIMITS OF CLEARING AND AREAS OF VEGETATION PRESERVATION AS PRESCRIBED ON THE PLANS SHALL BE CLEARLY FLAGGED IN THE FIELD AND OBSERVED DURING CONSTRUCTION.

2. ALL REQUIRED SEDIMENTATION AND EROSION CONTROL FACILITIES MUST BE CONSTRUCTED AND IN OPERATION PRIOR TO ANY LAND CLEARING AND/OR OTHER CONSTRUCTION TO ENSURE THAT SEDIMENT LADEN WATER DOES NOT ENTER THE NATURAL DRAINAGE SYSTEM. THE CONTRACTOR SHALL SCHEDULE AN INSPECTION OF THE EROSION CONTROL FACILITIES PRIOR TO ANY LAND CLEARING AND/OR CONSTRUCTION. ALL EROSION AND SEDIMENT FACILITIES SHALL BE MAINTAINED IN A SATISFACTORY CONDITION AS DETERMINED BY THE CITY, UNTIL SUCH TIME THAT CLEARING AND/OR CONSTRUCTION IS COMPLETED AND THE POTENTIAL FOR ON-SITE EROSION HAS PASSED. THE IMPLEMENTATION, MAINTENANCE, REPLACEMENT, AND ADDITIONS TO THE EROSION AND SEDIMENTATION CONTROL SYSTEMS SHALL BE THE RESPONSIBILITY OF THE PERMITEE.

3. THE EROSION AND SEDIMENTATION CONTROL SYSTEM FACILITIES DEPICTED ON THESE PLANS ARE INTENDED TO BE MINIMUM REQUIREMENTS TO MEET ANTICIPATED SITE CONDITIONS. AS CONSTRUCTION PROGRESSES AND UNEXPECTED OR SEASONAL CONDITIONS DICTATE, FACILITIES WILL BE NECESSARY TO ENSURE COMPLETE SILTATION CONTROL ON THE SITE. DURING THE COURSE OF CONSTRUCTION, IT SHALL BE THE OBLIGATION AND RESPONSIBILITY OF THE PERMITEE TO ADDRESS ANY NEW CONDITIONS THAT MAY BE CREATED BY HIS ACTIVITIES AND TO PROVIDE ADDITIONAL FACILITIES, OVER AND ABOVE THE MINIMUM REQUIREMENTS, AS MAY BE NEEDED TO PROTECT ADJACENT PROPERTIES, SENSITIVE AREAS, NATURAL WATER COURSES, AND/OR STORM DRAINAGE SYSTEMS.

4. APPROVAL OF THESE PLANS IS FOR GRADING, TEMPORARY DRAINAGE, EROSION AND SEDIMENTATION CONTROL ONLY. IT DOES NOT CONSTITUTE AN APPROVAL OF PERMANENT STORM DRAINAGE DESIGN, SIZE OR LOCATION OF PIPES, RESTRICTORS, CHANNELS, OR RETENTION FACILITIES.

5. ANY DISTURBED AREA WHICH HAS BEEN STRIPPED OF VEGETATION AND WHERE NO FURTHER WORK IS ANTICIPATED FOR A PERIOD OF 30 DAYS OR MORE, MUST BE IMMEDIATELY STABILIZED WITH MULCHING, GRASS PLANTING, OR OTHER APPROVED EROSION CONTROL TREATMENT APPLICABLE TO THE TIME OF YEAR IN QUESTION. GRASS SEEDING ALONE WILL BE ACCEPTABLE ONLY DURING THE MONTHS OF APRIL THROUGH SEPTEMBER INCLUSVE. SEEDING MAY PROCEED OUTSIDE THE SPECIFIED TIME PERIOD WHENEVER IT IS IN THE INTEREST OF THE PERMITEE BUT MUST BE AUGMENTED WITH MULCHING, NETTING, OR OTHER TREATMENT APPROVED BY THE CITY.

6. IN CASE EROSION OR SEDIMENTATION OCCURS TO ADJACENT PROPERTIES, ALL CONSTRUCTION WORK WITHIN THE DEVELOPMENT THAT WILL FURTHER AGGRAVATE THE SITUATION MUST CEASE, AND THE OWNER/CONTRACTOR WILL IMMEDIATELY COMMENCE RESTORATION METHODS. RESTORATION ACTIVITY WILL CONTINUE UNTIL SUCH TIME AS THE AFFECTED PROPERTY OWNER IS SATISFIED.

7. NO TEMPORARY OR PERMANENT STOCKPILING OF MATERIALS OR EQUIPMENT SHALL OCCUR WITHIN CRITICAL AREAS OR ASSOCIATED BUFFERS, OR THE CRITICAL ROOT ZONE FOR VEGETATION PROPOSED FOR RETENTION.

CITY OF PUYALLUP — DEVELOPMENT ENGINEERING and PUBLIC WORKS DEPARTMENTS

GRADING, EROSION, AND SEDIMENTATION CONTROL NOTES

DRAWN BY	CHECKED BY	APPROVED BY	REVISED BY	CITY STANDARD
JIM ERWIN-SVOBODA	LINDA LIAN	COLLEEN HARRIS	LINDA LIAN	05.02.01
FILE NAME: F:\DWG\COMMON\STDS\CITY\2009\05_GRD-05.01\05.02.01		DATE APPROVED 02/01/2009	DATE REVISED 11/18/2014	SCALE 1:1

(3) GRADING, EROSION, AND SEDIMENTATION CONTROL NOTES
SCALE: N.T.S.

APPROVED
BY Colleen Harris
CITY OF PUYALLUP ENGINEERING SERVICES
DATE 5.2.16

NOTE:
THIS APPROVAL IS VOID AFTER 1 YEAR FROM APPROVAL DATE.
THE CITY WILL NOT BE RESPONSIBLE FOR ERRORS AND/OR OMISSIONS ON THESE PLANS.
FIELD CONDITIONS MAY DICTATE CHANGES TO THESE PLANS AS DETERMINED BY THE ENGINEERING SERVICES MANAGER.

REVISIONS: PERMIT 04-28-2016

APPROVALS: DESIGNED S.H.; DRAWN J.B.; CHECKED R.H.; DATE 04-06-2016; SCALE AS NOTED

SEAL: RICHARD C. HAND, STATE OF WASHINGTON, 26780, REGISTERED PROFESSIONAL ENGINEER, 04/28/16

PREPARED BY: SITTS & HILL ENGINEERS, INC.
CIVIL • STRUCTURAL • SURVEYING
4815 CENTER STREET | TACOMA, WA. 98409
PHONE: (253) 474-9449 | FAX: (253) 474-0153
http://www.sitts-hill-engineers.com/

PREPARED FOR: PUYALLUP SCHOOL DISTRICT NO. 3
323 12TH STREET N.W.
PUYALLUP, WASHINGTON 98371

PROJECT: TRANSPORTATION AND DRIVER TRAINING MODULAR BUILDING
PUYALLUP, WASHINGTON

SHEET TITLE: DEMOLITION AND TESC NOTES AND DETAILS

SHEET NO. C1.1
5 OF 11

PROJECT NO. 16785.50

P:\16700\16785\Drawings\16785.50 Driver Training Portable Project\16785.5 - c1.1.dwg last edited: 04/28/16 3:48pm by: watkinsj

SOUTHWEST 1/4 OF SECTION 04, TOWNSHIP 19 NORTH, RANGE 4 EAST WILLAMETTE MERIDIAN

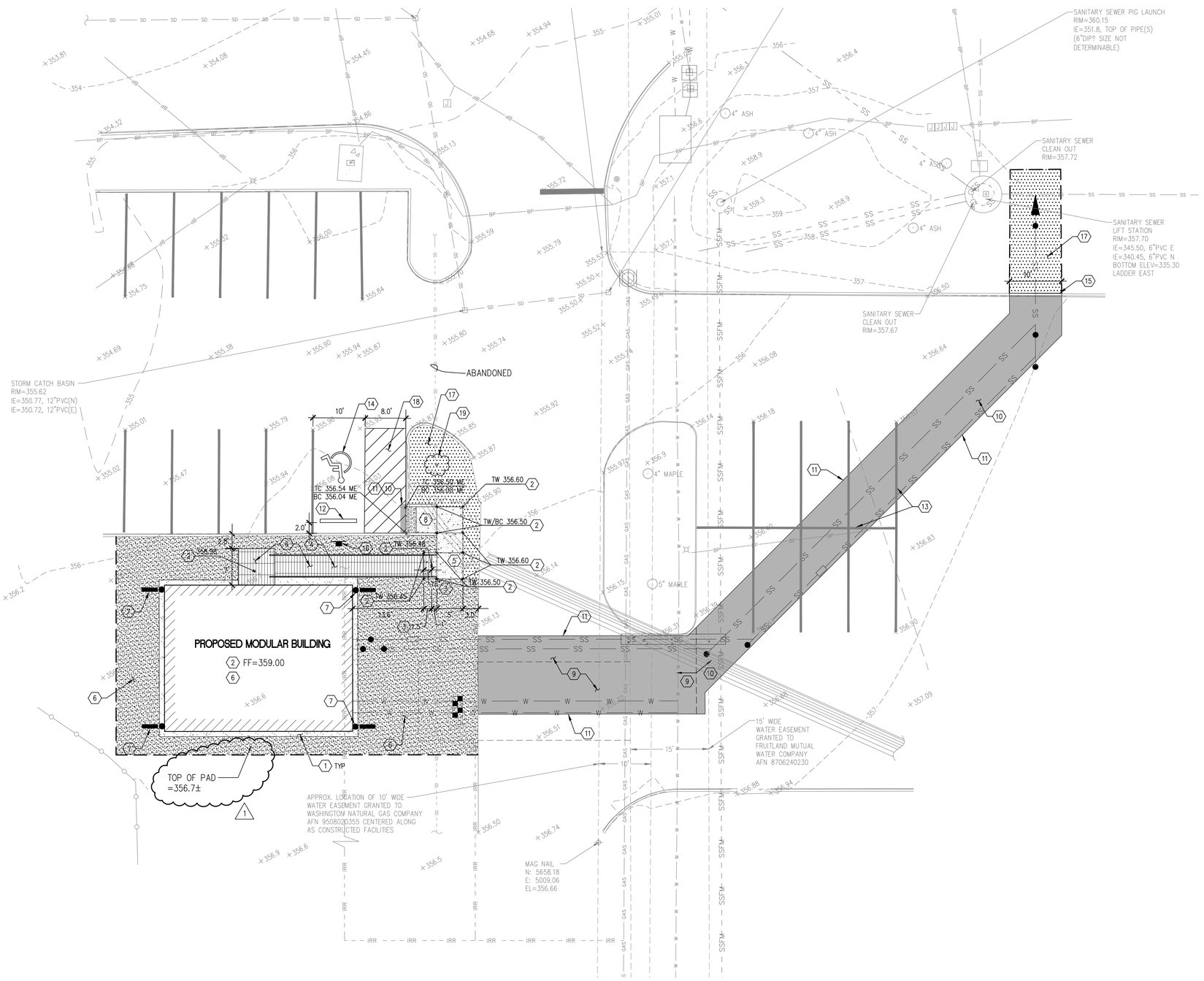

CALL 2 WORKING DAYS BEFORE YOU DIG
1-800-424-5555
UTILITIES UNDERGROUND LOCATION CENTER

THE BURIED UTILITIES ON THIS PROJECT ARE SHOWN IN THEIR APPROXIMATE LOCATION WHERE KNOWN. OTHER EXISTING BURIED UTILITIES MAY NOT BE SHOWN ON THESE PLANS. THE CONTRACTOR SHALL CONTACT ALL UTILITY COMPANIES AND HAVE THEIR LOCATION MARKED ON THE GROUND PRIOR TO CONSTRUCTION. THE CONTRACTOR WILL PROTECT, OR IMMEDIATELY REPAIR, ANY DAMAGED UTILITY "DISCOVERED" ON THIS PROJECT WITHOUT ADDITIONAL COSTS.

@00QNUDC

BY _____
CITY OF PUYALLUP
ENGINEERING SERVICES

DATE _____

NOTE:
THIS APPROVAL IS VOID AFTER 1 YEAR FROM APPROVAL DATE.

THE CITY WILL NOT BE RESPONSIBLE FOR ERRORS AND/OR OMISSIONS ON THESE PLANS.

FIELD CONDITIONS MAY DICTATE CHANGES TO THESE PLANS AS DETERMINED BY THE ENGINEERING SERVICES MANAGER.

LEGEND

- HYDROSEED AND AMENDED TOPSOIL
- ASPHALT PAVEMENT
- CONCRETE WALK
- GRAVEL SURFACING
- PORTABLE BUILDING
- RAMPS AND LANDINGS
- PRECAST CONCRETE WHEEL STOP
- ACCESSIBLE PARKING PAINT SYMBOL
- 4" WHITE, 45° PAINT STRIPING (2-COATS)
- EXTRUDED CURB
- SIGN

GENERAL NOTES

1. SEE RAMP MANUFACTURERS PLANS FOR DETAILS OF RAMP AND LANDING SYSTEMS. THE TOTAL RAMP RISE WILL BE LESS THAN 30". A RAMP WITH A "STANDARD" RAIL WILL BE INSTALLED PER MANUFACTURER. RAMP WILL BE NO GREATER THAN 12H:1V. SEE MANUFACTURER PLANS FOR INSTALLATION OF METAL AWNINGS.
2. RESTORE ALL DISTURBED AREAS OUTSIDE OF CRUSHED SURFACING AND CONCRETE AREAS WITH A MIN. OF 4" APPROVED TOPSOIL AND HYDROSEED IN ACCORDANCE WITH DETAIL B1/C2.2. CONTRACTOR TO WATER UNTIL GRASS IS ESTABLISHED TO A HEIGHT OF 4" MINIMUM.
3. CONTRACTOR TO PROTECT EXISTING FEATURES BEYOND THE LIMITS OF WORK AND REPAIR ANY DAMAGE AT NO ADDITIONAL COST.
4. EXISTING INFORMATION SHOWN IS FROM TOPOGRAPHIC SURVEY COMPLETED BY SITTS AND HILL ENGINEERS. SEE COVER SHEET FOR ADDITIONAL SURVEY INFORMATION. THE CONTRACTOR SHALL FIELD VERIFY EXISTING CONDITIONS AND NOTIFY THE ENGINEER IMMEDIATELY IF THERE ARE ANY DISCREPANCIES AFFECTING THE NEW CONSTRUCTION.
5. SEE SHEET C2.1 AND C2.2 FOR GRADING, DRAINAGE AND SURFACING PLAN NOTES AND DETAILS.
6. SEE ELECTRICAL PLANS FOR POWER AND LOW VOLTAGE CONNECTIONS.
7. SEE ARCHITECTURAL PLANS FOR ADDITIONAL PORTABLE INFORMATION.

PORTABLE INSTALLATION NOTES

1. INSTALL 6" OF CRUSHED SURFACING TOP COURSE (CSTC) UNDER THE PORTABLE PLUS 12" WIDE STRIP AROUND THE PORTABLE OUTLINE. UNLESS OTHERWISE SHOWN ON THE PLAN.
2. COORDINATE FINAL CONCRETE LANDING ELEVATIONS WITH WELCOME RAMP SYSTEMS, INC. CONTACT: TERRI GORDAN, 425-754-0489 OR SALES@WELCOMERAMPSYSTEMS.COM.
3. PROVIDE 18" FROM FACE OF STEP TO BACK CONCRETE EDGE.
4. PRE-MANUFACTURED RAMP BY WELCOME RAMP SYSTEMS, INC. IS PROVIDED BY OTHERS.
5. CONCRETE SIDEWALK/LANDING, SEE DETAIL C1/C2.2.
6. INSTALL 6" OF CRUSHED SURFACING TOP COURSE (CSTC) ON TOP OF THE SEPARATION GEOTEXTILE FABRIC PER PROJECT SPECIFICATIONS UNDER RAMP, RAMP LANDING AND STAIRS AND AT LOCATIONS SHOWN ON THE PLAN. TO PREVENT GRASS GROWTH. CSTC IS NOT SHOWN UNDER RAMP LANDING, RAMP AND STAIRS FOR CLARITY PURPOSES. SEE DETAIL D1/C2.2.
7. INSTALL CONCRETE SPLASH BLOCKS AT EACH DOWNSPOUT.
8. CONCRETE ACCESSIBLE CURB RAMP PER DETAIL B2/C2.3.
9. INSTALL HEAVY DUTY ASPHALT PAVEMENT PER DETAIL C2/C2.2.
10. INSTALL LIGHT DUTY ASPHALT PAVEMENT PER DETAIL C3/C2.2.
11. INSTALL ASPHALT JOINT PER DETAIL D2/C2.2.
12. INSTALL PRECAST CONCRETE WHEEL STOP PER DETAIL D3/C2.2.
13. PAINT 4" WIDE WHITE STALL STRIPING (2 COATS) TO MATCH EXISTING WHERE REQUIRED.
14. PAINT ACCESSIBLE PARKING SYMBOL PER DETAIL A2/C2.2.
15. INSTALL EXTRUDED CONCRETE CURB PER DETAIL D4/C2.2.
16. INSTALL ACCESSIBLE PARKING SIGN & POST PER DETAILS A3 AND B4/C2.2.
17. INSTALL AMENDED TOPSOIL PER DETAIL B1/C2.2. AND HYDROSEED.
18. INSTALL PAVEMENT PAINT MARKING PER DETAIL C4/C2.2.
19. INSTALL 2"ø MIN, 6' TALL TREE (MATCH SIMILAR SPECIES) PER DETAIL B4/C2.1

NORTH

HORIZONTAL SCALE: 1"=10'
10 0 10 20

1 RECORD DRAWINGS
INFORMATION PROVIDED BY CONTRACTOR.

GRADING, DRAINAGE AND SURFACING PLAN
SCALE: 1"=10'

REVISIONS

1	RECORD DRAWING	06-20-2016
	PERMIT	04-28-2016

APPROVALS

DESIGNED	S.H.
DRAWN	J.B.
CHECKED	R.H.
DATE	04-06-2016
SCALE	AS NOTED

SEAL
RICHARD C. HANSEN, STATE OF WASHINGTON, REGISTERED PROFESSIONAL ENGINEER
06/20/16

PREPARED BY

SITTS & HILL ENGINEERS, INC.
CIVIL ▪ STRUCTURAL ▪ SURVEYING
4815 CENTER STREET | TACOMA, WA. 98409
PHONE: (253) 474-9449 | FAX: (253) 474-0153
http://www.sitts-hill-engineers.com/

PREPARED FOR
PUYALLUP SCHOOL DISTRICT NO. 3
323 12TH STREET N.W.
PUYALLUP, WASHINGTON 98371

PROJECT
TRANSPORTATION AND DRIVER TRAINING MODULAR BUILDING
PUYALLUP, WASHINGTON

SHEET TITLE
GRADING, DRAINAGE AND SURFACING PLAN

SHEET NO.
C2.0
6 OF 11

PROJECT NO.
16785.50

P:\16700\16785\Drawings\16785.50 Driver Training Portable Project\16785.5 - c2.0.dwg last edited: 06/20/16 3:24pm by: wilkins

SOUTHWEST 1/4 OF SECTION 04, TOWNSHIP 19 NORTH, RANGE 4 EAST WILLAMETTE MERIDIAN

STANDARD STORMWATER NOTES

1. ALL WORKMANSHIP AND MATERIALS SHALL BE IN ACCORDANCE WITH CITY STANDARDS AND THE MOST CURRENT COPY OF THE STATE OF WASHINGTON STANDARD SPECIFICATIONS FOR ROAD, BRIDGE AND MUNICIPAL CONSTRUCTION (WSDOT/APWA) AND AS AMENDED BY THE COUNTY OR THE STATE.
2. TEMPORARY EROSION/WATER POLLUTION PREVENTION MEASURES SHALL BE REQUIRED IN ACCORDANCE WITH SECTION 1-07.15, AS MODIFIED BY THE APWA SUPPLEMENT, OF THE CURRENT STATE OF WASHINGTON STANDARD SPECIFICATIONS AND THE DEPARTMENT OF ECOLOGY SURFACE WATER MANAGEMENT MANUAL.
3. SHOULD THE TEMPORARY EROSION AND SEDIMENTATION CONTROL MEASURES AS SHOWN ON THIS DRAWING NOT PROVE ADEQUATE TO CONTROL EROSION AND SEDIMENTATION, THE APPLICANT/CONTRACTOR SHALL INSTALL ADDITIONAL FACILITIES AS NECESSARY TO PROTECT ADJACENT PROPERTIES, SENSITIVE AREAS, NATURAL WATER COURSES AND/OR STORM DRAINAGE SYSTEMS.
4. CALL THE UNDERGROUND LOCATE LINE 1-800-424-5555 A MINIMUM OF 48 HOURS PRIOR TO ANY EXCAVATIONS.
5. THE STORM DRAINAGE SYSTEM SHALL BE CONSTRUCTED ACCORDING TO APPROVED PLANS ON FILE WITH THE CITY. ANY SIGNIFICANT DEVIATION FROM THE APPROVED PLANS WILL REQUIRE WRITTEN APPROVAL FROM THE CITY.
6. A COPY OF THE APPROVED STORMWATER PLANS MUST BE ON THE JOB SITE WHENEVER CONSTRUCTION IS IN PROGRESS.
7. ALL EROSION CONTROL AND STORMWATER FACILITIES SHALL BE REGULARLY INSPECTED AND MAINTAINED BY THE CONTRACTOR DURING CONSTRUCTION.
8. ALL DRAINAGE STRUCTURES, SUCH AS CATCH BASINS AND MANHOLES, NOT LOCATED WITHIN A TRAVELED ROADWAY OR SIDEWALK, SHALL HAVE SOLID LOCKING LIDS AND CONCRETE COLLARS.

STANDARD PROJECT NOTES

1. ALL MATERIALS AND WORKMANSHIP SHALL BE IN ACCORDANCE WITH THE REQUIREMENTS OF THE LATEST STATE OF WASHINGTON DEPARTMENT OF TRANSPORTATION STANDARD SPECIFICATIONS FOR ROAD, BRIDGE, AND MUNICIPAL CONSTRUCTION AND CITY OF PUYALLUP PUBLIC ROAD STANDARDS.
2. IT WILL BE THE CONTRACTOR'S RESPONSIBILITY TO CONTACT ALL UTILITY COMPANIES TO COORDINATE CONSTRUCTION. ALL UTILITY RELOCATION WORK SHALL BE AT THE EXPENSE OF THE CONTRACTOR AND MUST BE IN ACCORDANCE WITH STANDARDS OF THE CITY.
3. BURIED UTILITIES ARE SHOWN IN THEIR APPROXIMATE LOCATION. THE CONTRACTOR SHALL HAVE THE UTILITIES VERIFIED ON THE GROUND PRIOR TO CONSTRUCTION.
4. ANY REVISIONS TO THESE PLANS MUST BE REVIEWED AND APPROVED BY THE CITY OF PUYALLUP DEVELOPMENT ENGINEERING SECTION PRIOR TO ANY IMPLEMENTATION IN THE FIELD.
5. UPON COMPLETION OF THE PROJECT'S STORM DRAINAGE SYSTEM, AN "ENGINEER'S INSPECTION REPORT", SIGNED AND STAMPED BY A PROFESSIONAL ENGINEER IN THE STATE OF WASHINGTON MUST BE SUBMITTED TO THE DEPARTMENT PRIOR TO RELEASE OF ANY FINANCIAL GUARANTEE POSTED BY THE PROPONENT.
6. THE CONTRACTOR SHALL NOTIFY THE APPLICANT'S ENGINEER IN THE EVENT OR DISCOVERY OF POOR SOILS, STANDING GROUNDWATER OR SEVERE DISCREPANCIES FROM THE EXPECTED SOIL CONDITIONS.
7. EXCAVATION STANDARDS:

   CUT SLOPES:

   SLOPES SHALL NOT BE STEEPER THAN 2 HORIZONTAL TO 1 VERTICAL, OR AS RECOMMENDED BY A SOILS ENGINEER.

   THE CATCH POINT OF THE TOP OF THE SLOPE SHALL BE SET BACK FROM THE SITE BOUNDARY LINE IN ACCORDANCE WITH THE FOLLOWING TABLE, UNLESS A RETAINING WALL IS DESIGNED BY THE ENGINEER AND CONSTRUCTED FOR THE PROJECT.

CUT DEPTH	SETBACK DISTANCE
UNDER 5 FEET	2 FEET
5 – 20 FEET	HEIGHT/2
OVER 20 FEET	10 FEET

8. ISSUANCE OF SITE DEVELOPMENT PERMIT DOES NOT IMPLY OR SIGNIFY THAT THE PROPOSED WORK COMPLIES WITH THE REQUIREMENTS OF OR IS ALLOWED BY OTHER CITY ORDINANCES, REGULATIONS OR REQUIREMENTS, OR STATE OR FEDERAL LAWS. THE CONTRACTOR WILL ACCEPT SOLE RESPONSIBILITY AND LIABILITY FOR COMPLIANCE WITH ALL STATE, FEDERAL, AND LOCAL RULES, REQUIREMENTS, LAWS, ORDINANCES AND REGULATIONS.
9. THE SITE DEVELOPMENT PERMIT MUST BE POSTED BY THE CONTRACTOR AT THE DRIVEWAY LOCATION FOR THE DURATION OF THE CONSTRUCTION ACTIVITY. THE CONTRACTOR WILL BE RESPONSIBLE FOR THE WEATHERPROOFING OF THE PERMIT, POSTING APPARATUS, AND MAINTENANCE.
10. THE CITY IS AUTHORIZED TO MAKE INSPECTIONS AND TAKE SUCH ACTIONS AS REQUIRED TO ENFORCE THESE REGULATIONS. THE CITY REPRESENTATIVE SHALL PRESENT PROPER CREDENTIALS AND MAKE A REASONABLE EFFORT TO CONTACT THE PROPERTY OWNER BEFORE ENTERING ONTO PRIVATE PROPERTY.
11. SHOULD THE CITY BECOME AWARE OF CONDITIONS THAT INVALIDATE THE ORIGINAL DESIGN DATA USED TO OBTAIN THE PERMIT OR DETERMINE THAT THE CONTRACTOR IS NOT COMPLYING WITH THE CONDITIONS OF THE PERMIT OR APPROVED PLANS, THE CITY MAY REVOKE THE ORIGINAL PERMIT AND/OR ORDER WORK STOPPED ON THE PROJECT. THE CITY MAY REQUIRE THE APPLICANT TO RESUBMIT INFORMATION OR PLANS FOR REVIEW AND APPROVAL AND APPLY FOR A NEW PERMIT.

FILL STANDARDS

1. FILLS WHICH ARE INTENDED FOR BUILDING SITES SHALL BE CONSTRUCTED IN CONFORMANCE WITH THE REQUIREMENTS OF THE LATEST EDITION OF THE U.B.C. AS ADOPTED BY PIERCE COUNTY, AND AN ASSIGNMENT OF ALLOWABLE SOIL-BEARING PRESSURES WILL BE UNDER THE JURISDICTION OF THE CITY OF PUYALLUP BUILDING OFFICIAL IN ACCORDANCE WITH THE U.B.C.
2. SLOPES SHALL BE NO STEEPER THAN IS SAFE FOR THE INTENDED USE AND SHALL NOT BE STEEPER THAN TWO HORIZONTAL TO ONE VERTICAL, OR AS RECOMMENDED BY A SOIL ENGINEER. FILL SITES MUST BE APPROVED BY THE ENGINEER AS SUITABLE LOCATIONS FOR THE PROPOSED FILL. THE GROUND SURFACE FOR FILLS OVER FIVE FEET IN HEIGHT SHALL BE PREPARED BY REMOVING VEGETATION, NONCOMPLYING FILL, TOPSOIL, AND OTHER UNSUITABLE MATERIALS; SCARIFYING TO PROVIDE A BOND WITH THE NEW FILL; AND, WHERE EXITING SLOPES ARE STEEPER THAN FIVE HORIZONTAL TO ONE VERTICAL, BY BENCHING INTO COMPETENT MATERIAL AS DETERMINED BY THE ENGINEER. THE BENCH UNDER THE TOE OF A FILL ON A SLOPE STEEPER THAN 5 HORIZONTAL TO 1 VERTICAL SHALL BE AT LEAST 10 FEET WIDE OR AS RECOMMENDED BY A SOIL ENGINEER.
3. EXCEPT AS PERMITTED BY THE CITY, NO MATERIAL OTHER THAN EARTH MATERIAL SHALL BE BURIED OR PLACED IN FILLS. PLACEMENT OF OTHER THAN EARTH MATERIAL IS REGULATED BY STATE STATUTES OR FEDERAL LAWS, AND ADDITIONAL PERMITS MAY BE REQUIRED.
4. FILLS SHALL BE CONSTRUCTED USING EARTH MATERIALS, COMPACTION METHODS, AND CONSTRUCTION TECHNIQUES SO THAT TABLE FILLS ARE CREATED.
5. THE TOE OR CATCH POINT OF FILL SLOPES SHALL BE SET BACK FROM THE SITE BOUNDARY LINE IN ACCORDANCE WITH THE FOLLOWING TABLE, UNLESS A RETAINING WALL IS DESIGNED BY THE ENGINEER AND CONSTRUCTED FOR THE PROJECT.

FILL DEPTH	SETBACK DISTANCE
UNDER 5 FEET	2 FEET
5 – 40 FEET	HEIGHT OF FILL
OVER 40 FEET	20 FEET

EXCAVATION NOTES

1. EXCAVATE TO ELEVATIONS, LINES AND GRADES INDICATED TO NOT MORE THAN 1/2-INCH ABOVE OR BELOW THAT REQUIRED.
2. SLOPE SIDES OF EXCAVATION AS INDICATED OR COMPLY WITH LOCAL CODES AND ORDINANCES HAVING JURISDICTION, WHICHEVER IS MORE STRINGENT. SHORE AND BRACE WHERE SLOPING IS NOT POSSIBLE BECAUSE OF SPACE RESTRICTIONS OR STABILITY OF MATERIAL EXCAVATED.
3. STOCKPILE SATISFACTORY EXCAVATED MATERIALS WHERE DIRECTED UNTIL REQUIRED FOR BACKFILL OR FILL. PLACE, GRADE AND SHAPE STOCKPILES FOR PROPER DRAINAGE. LOCATE AND RETAIN SOIL MATERIALS AWAY FROM EDGE OF EXCAVATIONS.
4. DISPOSE OF EXCESS SOIL AND UNSUITABLE SOIL MATERIAL OFF-SITE AS DIRECTED.

SUBGRADE PREPARATION NOTES

1. SUBGRADE BELOW STRUCTURAL FILL SHALL CONSIST OF FIRM, UNYIELDING NATIVE SOILS OR STRUCTURAL FILL MATERIALS. UNDER NO CIRCUMSTANCES SHALL FOUNDATIONS BE INSTALLED ATOP LOOSE, SOFT, OR FROZEN SOIL, SLOUGH, DEBRIS, EXISTING UNCONTROLLED FILL, OR SURFACES COVERED BY STANDING WATER. ANY LOCALIZED ZONES OF LOOSER GRANULAR SOILS OBSERVED WITHIN A SUBGRADE SHALL BE COMPACTED TO A DENSITY EQUAL TO THE SURROUNDING SOILS. ANY ORGANIC, SOFT, OR PUMPING SOILS OBSERVED WITHIN A SUBGRADE SHALL BE OVEREXCAVATED AND REPLACED WITH STRUCTURAL FILL MATERIAL PER THE SUBSEQUENT PARAGRAPHS. SUBGRADE CONDITION SHALL BE VERIFIED BY THE GEOTECHNICAL ENGINEER OR SPECIAL INSPECTOR PRIOR TO PLACING STRUCTURAL FILL.

COMPACTION NOTES

1. CONTROL SOIL COMPACTION DURING CONSTRUCTION PROVIDING MINIMUM PERCENTAGE OF DENSITY SPECIFIED FOR EACH AREA CLASSIFICATION. PERCENTAGES ARE RELATED TO MAXIMUM DRY DENSITY AS MEASURED IN CONFORMANCE WITH ASTM D 1557.
2. COMPACT TOP 12-INCHES OF SUBGRADE (24-INCHES UNDER PROPOSED DRIVING SURFACES) TO 95-PERCENT OF MAXIMUM DRY DENSITY UNDER PAVEMENTS AND GRAVEL SURFACING.
3. WHERE SUBGRADE OR LAYER OF SOIL MATERIAL MUST BE MOISTURE CONDITIONED BEFORE COMPACTION, UNIFORMLY APPLY WATER TO SURFACE OF SUBGRADE OR LAYER OF SOIL MATERIAL TO PREVENT FREE WATER APPEARING ON SURFACE DURING OR SUBSEQUENT TO COMPACTION OPERATIONS. REMOVE AND REPLACE, OR SCARIFY AND AIR DRY, SOIL MATERIAL THAT IS TOO WET TO PERMIT COMPACTION TO SPECIFIED DENSITY. SOIL MATERIAL THAT HAS BEEN REMOVED BECAUSE IT IS TOO WET TO PERMIT COMPACTION MAY BE STOCKPILED OR SPREAD AND ALLOWED TO DRY. ASSIST DRYING BY DISKING, HARROWING OR PULVERIZING UNTIL MOISTURE CONTENT IS REDUCED TO SATISFACTORY VALUE.

AGGREGATE NOTES

1. ALL IMPORTED AGGREGATES SHALL BE CHEMICALLY TESTED TO VERIFY COMPLIANCE WITH WAC 173-303 REQUIREMENTS OR PROVIDE CERTIFICATION THAT ALL IMPORTED AGGREGATES ARE VIRGIN SOILS MANUFACTURED AND PROCESSED WITH NO RECYCLED SOIL MATERIALS.

COMPOST NOTES

COMPOST: SHALL COMPLY WITH THE FOLLOWING REQUIREMENTS.

1. COMPOST SHALL MEET THE DEFINITION OF "COMPOSTED MATERIALS" IN WAC 173-350-100 (INCLUDING CONTAMINANT LEVELS AND OTHER STANDARDS), AVAILABLE ONLINE AT http://apps.leg.wa.gov/wac/default.aspx?cite=173-350-100.
2. COMPOST SHALL BE PRODUCED AT A COMPOSTING FACILITY PERMITTED BY THE WASHINGTON STATE DEPARTMENT OF ECOLOGY IN ACCORDANCE WITH WAC 173-350-220 REQUIREMENTS, AVAILABLE AT http://apps.leg.wa.gov/wac/default.aspx?cite=173-350-220. A CURRENT LIST OF PERMITTED FACILITIES IS AVAILABLE AT: http://www.ecy.wa.gov/programs/swfa/organics/pdf/2011CompostFacilities.pdf.
3. THE COMPOST PRODUCT SHALL COMPLY WITH THE FOLLOWING REQUIREMENTS:
   * THE COMPOST PRODUCT SHALL CONSIST OF A 45 – 65 PERCENT BY VOLUME OF "TYPE 1 FEEDSTOCK" ORGANIC MATTER FROM RECYCLED PLANT MATERIALS CONSISTING OF SOURCE-SEPARATED YARD AND GARDEN WASTES, WOOD WASTES, AGRICULTURAL CROP RESIDUES, WAX-COATED CARDBOARD, PRE-CONSUMER VEGETATIVE FOOD WASTES, MANURE, FOOD WASTES, OTHER SIMILAR SOURCE-SEPARATED MATERIALS THAT THE JURISDICTIONAL HEALTH DEPARTMENT DETERMINES TO HAVE A COMPARABLE LOW LEVEL OF RISK IN HAZARDOUS SUBSTANCES, HUMAN PATHOGENS, AND PHYSICAL CONTAMINANTS.
   * THE COMPOST PRODUCT SHALL COMPLY WITH WAC 173-350-220 METAL, PATHOGEN AND PHYSICAL PROPERTY REQUIREMENTS IDENTIFIED IN TABLE 220-B.
   * THE COMPOST PRODUCT SHALL NOT CONSIST OF SOURCE-SEPARATED MATERIALS THAT THE JURISDICTIONAL HEALTH DEPARTMENT DETERMINES TO HAVE A COMPARABLE LOW LEVEL OF RISK IN HAZARDOUS SUBSTANCES AND PHYSICAL CONTAMINANTS, BUT ARE LIKELY TO HAVE HIGH LEVELS OF HUMAN PATHOGENS.
   * THE COMPOST PRODUCT SHALL NOT CONSIST OF MUNICIPAL SOLID WASTES, POST COLLECTION SEPARATED OR PROCESSED SOLID WASTES, INDUSTRIAL SOLID WASTES, INDUSTRIAL BIOLOGICAL TREATMENT SLUDGES, MODERATE RISK WASTES, DANGEROUS OR UNIVERSAL WASTES AS DEFINED IN CHAPTER 173-303 WAC, DANGEROUS WASTE REGULATIONS OR OTHER SIMILAR COMPOSTABLE MATERIALS THAT THE JURISDICTIONAL HEALTH DEPARTMENT DETERMINES TO HAVE A COMPARABLE HIGH LEVEL OF RISK IN HAZARDOUS SUBSTANCES, HUMAN PATHOGENS AND PHYSICAL CONTAMINANTS,
   * THE COMPOST PRODUCT SHALL NOT CONSIST OF "SOLID WASTE" OR "WASTES" MATERIALS PUTRESCIBLE AND NON-PUTRESCIBLE SOLID AND SEMISOLID WASTES INCLUDING, BUT NOT LIMITED TO, GARBAGE, RUBBISH, ASHES, INDUSTRIAL WASTES, SWILL, SEWAGE SLUDGE, DEMOLITION AND CONSTRUCTION WASTES, ABANDONED VEHICLES OR PARTS THEREOF, CONTAMINATED SOILS AND CONTAMINATED DREDGED MATERIAL, AND RECYCLABLE MATERIALS.
   * THE COMPOST PRODUCT SHALL NOT CONSIST OF ANY "SEWAGE SLUDGE" MEANS SOLID, SEMISOLID, OR LIQUID RESIDUE GENERATED DURING THE TREATMENT OF DOMESTIC SEWAGE IN A TREATMENT WORKS. SEWAGE SLUDGE INCLUDES, BUT IS NOT LIMITED TO, DOMESTIC SEPTAGE; SCUM OR SOLIDS REMOVED IN PRIMARY, SECONDARY, OR ADVANCED WASTEWATER TREATMENT PROCESSES; AND A MATERIAL DERIVED FROM SEWAGE SLUDGE. SEWAGE SLUDGE DOES NOT INCLUDE ASH GENERATED DURING THE FIRING OF SEWAGE SLUDGE IN A SEWAGE SLUDGE INCINERATOR OR GRIT AND SCREENINGS GENERATED.
   * THE COMPOST PRODUCT SHALL BE FREE OF NOXIOUS WEED SEED. WEEDS MAY DEFINED AS: DANDELION, JIMSONWEED, QUACKGRASS, HORSETAIL, MORNING GLORY, RUSH GRASS, MUSTARD, LAMBSQUARTER, CHICKWEED, CRESS, CRABGRASS, CANADIAN THISTLE, NUTGRASS, POISON OAK, BLACKBERRY, TANSY RAGWORT, BERMUDA GRASS, JOHNSON GRASS, POISON IVY, NUT SEDGE, NIMBLE WILL, BINDWEED, BENT GRASS, WILD GARLIC, PERENNIAL SORREL, AND BROME GRASS, SCOTCH BROOM, BLACKBERRY, BUTTERFLY BUSH, POISON HEMLOCK AND JAPANESE KNOTWEED, CLOVER.
   * THE COMPOST PRODUCT SHALL BE NUTRIENT BALANCED (TOTAL N, P205, K20, CA, MG) TO ENHANCE RAPID VEGETATION GROWTH.
   * MOISTURE CONTENT RANGE: NO VISIBLE FREE WATER OR DUST PRODUCED WHEN HANDLING THE MATERIAL.
   * SCREENED TO THE SIZE GRADATIONS FOR FINE COMPOST UNDER TMECC TEST METHOD 02.02B AS REQUIRED BELOW:

SIEVE SIZES	PERCENTAGE PASSING
1-INCH	99%-100%
5/8 INCH	90%-100%
¼ INCH	40%-95%

   * TESTED IN ACCORDANCE WITH THE U.S. COMPOSTING COUNCIL "TESTING METHODS FOR THE EXAMINATION OF COMPOST AND COMPOSTING" (TMECC), AS ESTABLISHED IN THE COMPOSTING COUNCIL'S "SEAL OF TESTING ASSURANCE" (STA) PROGRAM.
   * HAVE ORGANIC MATTER CONTENT BETWEEN 45% AND 65% BY WEIGHT BASIS AS DETERMINED BY TMECC 05.07A, "LOSS ON IGNITION ORGANIC MATTER METHOD."
   * PH BETWEEN 6.0 AND 8.5 (TMECC 04.11A) IF THE PH FALLS OUTSIDE OF THE ACCEPTABLE RANGE, IT MAY BE MODIFIED WITH LIME TO INCREASE THE PH OR IRON SULFATE PLUS SULFUR TO LOWER THE PH. THE LIME OR IRON SULFATE SHALL BE MIXED UNIFORMLY INTO THE SOIL PRIOR TO USE.
   * MANUFACTURED INERT CONTENT (PLASTIC, CONCRETE, CERAMICS, METAL, ETC.) LESS THAT 1% BY WEIGHT (TMECC 03.08A).
   * SOLUBLE SALT CONTENT LESS THAN 4.0 MMHOS/CM TESTED IN ACCORDANCE WITH TMECC 04.10A, "1.5 SLURRY METHOD, MASS BASIS."
   * MATURITY GREATER THAN 80% IN ACCORDANCE WITH TMECC 05.05A, "GERMINATION AND VIGOR."
   * STABILITY OF 7 OR BELOW IN ACCORDANCE WITH TMECC 05.08B, "CARBON DIOXIDE EVOLUTION RATE".
   * CARBON TO NITROGEN RATIO OF LESS THAN 25:1 AS DETERMINED BY TMECC 04.01, "TOTAL CARBON" AND 04.02D, "TOTAL KJELDAHL NITROGEN". THE C:N RATIO MAY BE UP TO 35:1 FOR PLANTINGS COMPOSED ENTIRELY OF PUGET SOUND LOWLAND NATIVE SPECIES.

MULCH

MULCH: MULCH SHALL BE A BLEND OF ANGULAR, LOOSE, LONG, THIN WOOD PIECES THAT ARE FRAYED, WITH A HIGH LENGTH-TO-WIDTH RATIO, AND IT SHALL BE DERIVED FROM NATIVE CONIFER OR DECIDUOUS TREES. THE MULCH WOOD STRAND SHALL HAVE LENGTHS BETWEEN 1/16 AND 3/4 INCH. THE MULCH SHALL NOT CONTAIN SALT, PRESERVATIVES, GLUE, RESIN, TANNIN, GROWTH INHIBITING AGENTS OR OTHER COMPOUNDS IN QUANTITIES THAT WOULD BE DETRIMENTAL TO PLANT LIFE. SAWDUST OR WOOD CHIPS OR SHAVINGS WILL NOT BE ACCEPTABLE. MULCH SHALL CONFORM TO WSDOT 9-14.4 AND 9-14.4(2)B MODERATE-TERM MULCH REQUIREMENTS.

SUBMITTALS

* SUBMIT CERTIFICATION DOCUMENTATION AND TEST RESULTS THAT ALL IMPORT MATERIALS DO NOT CONTAIN DANGEROUS/HAZARDOUS WASTE PRODUCTS IN ACCORDANCE WITH WAC 173-303.
* SUBMIT IMPORT MATERIALS SOURCES FOR ARCHITECT/ENGINEER APPROVAL.
* SUBMIT CERTIFICATION DOCUMENTATION AND TEST RESULTS THAT ALL COMPOST COMPLIES WITH WAC 173-350 CHEMICAL REQUIREMENTS.
* SUBMIT COMPOST ANALYSIS, PH, GRADATION, MATURITY, SALT, STABILITY, INERT CONTENT, ORGANIC CONTENT, WSDOT/TMECC DOCUMENTATION.
* SUBMIT CONCRETE DESIGN MIX
* SUBMIT HMA MIX DESIGN
* SUBMIT AGGREGATE GRADATION

CONCRETE PAVEMENT SURFACING NOTES

1. CONCRETE SHALL COMPLY WITH WSDOT STANDARD SPECIFICATIONS SECTION 6-02, CLASS 3000 AIR ENTRAINED UNLESS OTHERWISE SPECIFIED.
2. CEMENT CONCRETE SIDEWALKS SHALL BE PER PLAN REQUIREMENTS AND WSDOT STANDARD SPECIFICATION 8-14.
3. CEMENT CONCRETE CURBS SHALL BE PER PLAN REQUIREMENTS AND WSDOT STANDARD SPECIFICATION 8-04.

HOT MIX ASPHALT CONCRETE PAVEMENT SURFACING NOTES

1. ALL PROJECT HOT MIX ASPHALT PAVEMENTS SHALL BE PER WSDOT STANDARD SPECIFICATION 5-04.
2. ALL HMA SHALL BE 1/2" HMA UNLESS OTHERWISE SPECIFIED.

SITE PAVEMENT PAINT NOTES

1. ALL PAVEMENT MARKINGS SHALL BE PAINT. ALL PAVEMENT MARKINGS SHALL COMPLY WITH WSDOT SPECIFICATION 9-34 AND SHALL BE APPLIED IN ACCORDANCE WITH WSDOT SPECIFICATION 8-22.
2. PAINT SHALL BE APPLIED IN TWO APPLICATIONS. THE TIME PERIOD BETWEEN APPLICATIONS SHALL BE IN ACCORDANCE WITH WSDOT SPECIFICATION SECTION 8-22.3(3).
3. PAINT SHALL BE TOP-COATED WITH GLASS BEADS PER WSDOT SPECIFICATION SECTION 8-22.3(3)G.

CALL 2 WORKING DAYS BEFORE YOU DIG
1-800-424-5555
UTILITIES UNDERGROUND LOCATION CENTER

THE BURIED UTILITIES ON THIS PROJECT ARE SHOWN IN THEIR APPROXIMATE LOCATION WHERE KNOWN. OTHER EXISTING BURIED UTILITIES MAY NOT BE SHOWN ON THESE PLANS. THE CONTRACTOR SHALL CONTACT ALL UTILITY COMPANIES AND HAVE THEIR LOCATION MARKED ON THE GROUND PRIOR TO CONSTRUCTION. THE CONTRACTOR WILL PROTECT, OR IMMEDIATELY REPAIR, ANY DAMAGED UTILITY "DISCOVERED" ON THIS PROJECT WITHOUT ADDITIONAL COSTS.

APPROVED

BY Colleen Harris
CITY OF PUYALLUP
ENGINEERING SERVICES

DATE 5.2.16

NOTE:
THIS APPROVAL IS VOID AFTER 1 YEAR FROM APPROVAL DATE.

THE CITY WILL NOT BE RESPONSIBLE FOR ERRORS AND/OR OMISSIONS ON THESE PLANS.

FIELD CONDITIONS MAY DICTATE CHANGES TO THESE PLANS AS DETERMINED BY THE ENGINEERING SERVICES MANAGER.

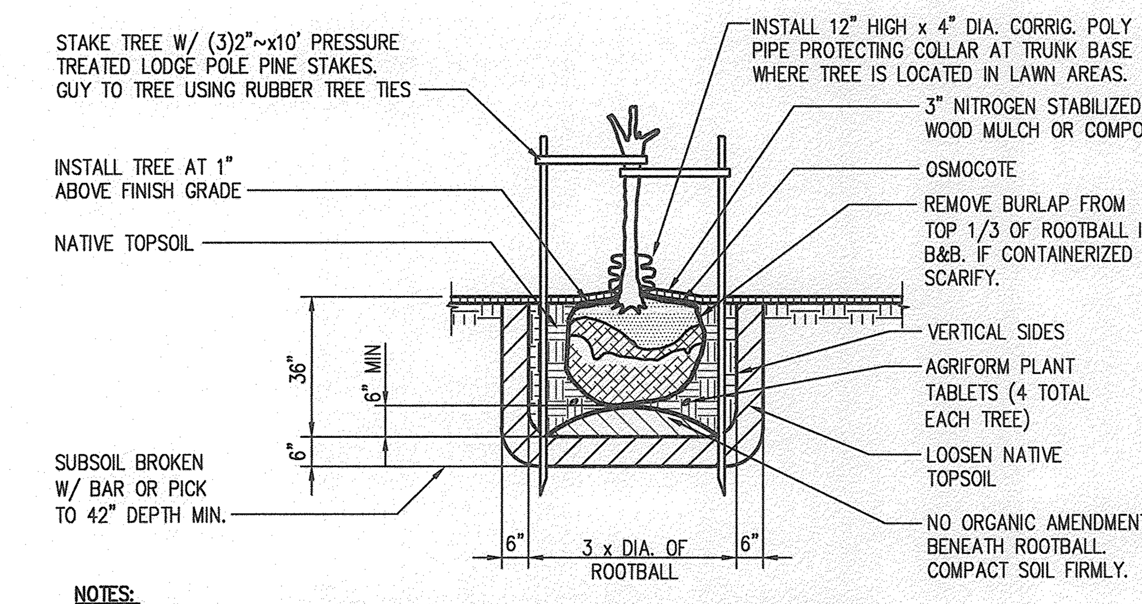

NOTES:
WHEN THE ROOTBALL IS ENCLOSED IN A WIRE BASKET SUPPORT, CUT AND REMOVE ALL WIRES AFTER PLACEMENT AND ADJUSTMENT OF TREE IN THE PLANTING PIT AND PRIOR TO BACKFILLING WITH TOPSOIL. WHERE TREES ARE PLANTED IN LAWN AREAS, INSTALL 60"~x 3" DEEP MULCH CIRCLE AT BASE OF TREE TRUNKS. INSTALL 6" HIGH BERM TO FORM 4' DIA. WATERING BASE WHERE TREES ARE LOCATED IN PLANTING BEDS.

B4 TREE PLANTING DETAIL
SCALE: N.T.S.

REVISIONS
PERMIT 04-28-2016

APPROVALS
DESIGNED S.H.
DRAWN J.B.
CHECKED R.H.
DATE 04-06-2016
SCALE

SEAL
RICHARD C. HANDY, STATE OF WASHINGTON, 26780, REGISTERED PROFESSIONAL ENGINEER, 04/28/16

PREPARED BY
SITTS & HILL ENGINEERS, INC.
CIVIL ▪ STRUCTURAL ▪ SURVEYING
4815 CENTER STREET | TACOMA, WA. 98409
PHONE: (253) 474-9449 | FAX: (253) 474-0153
http://www.sitts-hill-engineers.com/

PREPARED FOR
PUYALLUP SCHOOL DISTRICT NO. 3
323 12TH STREET N.W.
PUYALLUP, WASHINGTON 98371

PROJECT
TRANSPORTATION AND DRIVER TRAINING MODULAR BUILDING
PUYALLUP, WASHINGTON

SHEET TITLE
GRADING, DRAINAGE AND SURFACING NOTES

SHEET NO.
C2.1

PROJECT NO.
16785.50

P:\16700\16785\Drawings\16785.50 Driver Training Portable Project\16785.5 – c2.1.dwg last edited: 04/28/16 3:50pm by: watkinsj

SOUTHWEST 1/4 OF SECTION 04, TOWNSHIP 19 NORTH, RANGE 4 EAST WILLAMETTE MERIDIAN

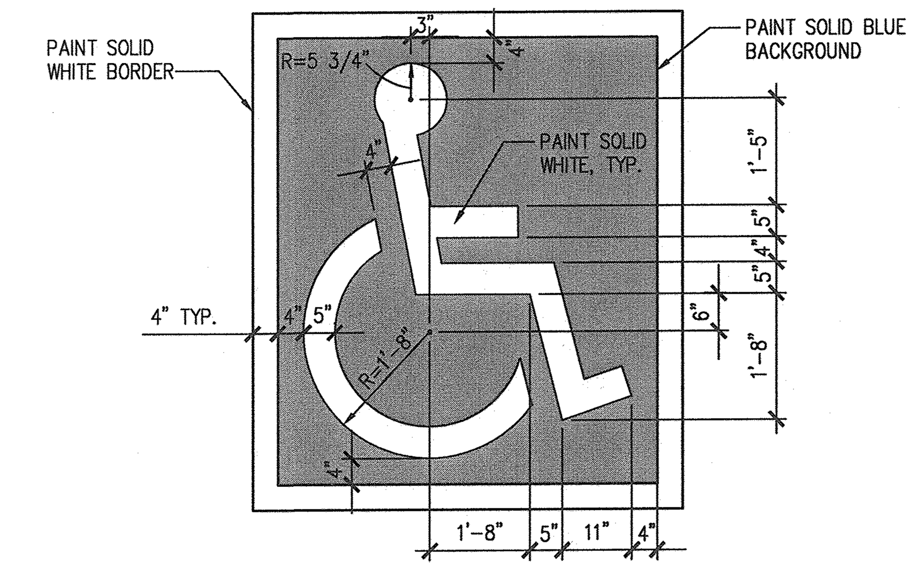

A2 ADA PARKING STALL PAINTED SYMBOL
SCALE: N.T.S.

NOTES:
1. ALL SIGNS AND STRIPING SHALL BE INSTALLED PER WSDOT STANDARD PLANS AND MUTCD.
2. SEE SITE SURFACING AND LAYOUT PLANS FOR SIGN LOCATIONS.
3. ALL SIGNS TO BE WHITE BACKGROUND WITH BLACK LEGEND, UNLESS OTHERWISE NOTED.

A3 SIGN DETAILS
SCALE: N.T.S.

APPROVED

BY Colleen Harris
CITY OF PUYALLUP
ENGINEERING SERVICES

DATE 5.2.16

NOTE:
THIS APPROVAL IS VOID AFTER 1 YEAR FROM APPROVAL DATE.

THE CITY WILL NOT BE RESPONSIBLE FOR ERRORS AND/OR OMISSIONS ON THESE PLANS.

FIELD CONDITIONS MAY DICTATE CHANGES TO THESE PLANS AS DETERMINED BY THE ENGINEERING SERVICES MANAGER.

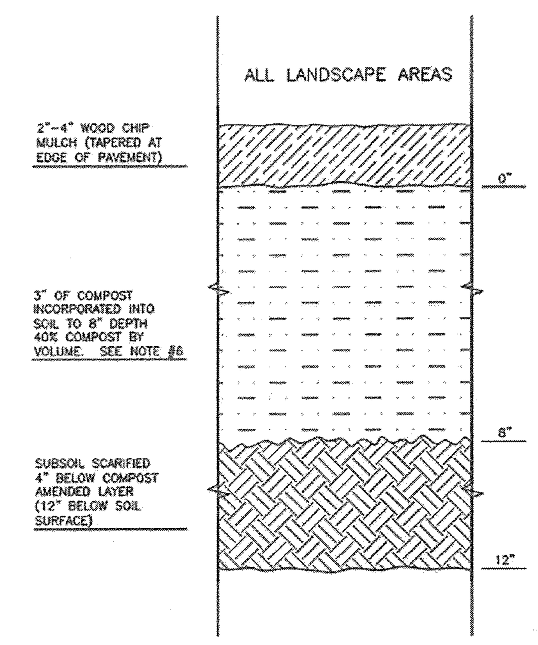

NOTES:
1. ALL SOIL AREAS DISTURBED OR COMPACTED DURING CONSTRUCTION, AND NOT COVERED BY BUILDINGS OR PAVEMENT, SHALL BE AMENDED WITH COMPOST AS DESCRIBED BELOW.
2. SUBSOIL SHOULD BE SCARIFIED (LOOSENED) 4 INCHES BELOW AMENDED LAYER, TO PRODUCE 12-INCH DEPTH OF UN-COMPACTED SOIL, EXCEPT WHERE SCARIFICATION WOULD DAMAGE TREE ROOTS OR AS DETERMINED BY THE ENGINEER. SEE NOTE BELOW REGARDING PLANTING STEPS FOR STREET TREES.
3. COMPOST SHALL BE TILLED IN TO 8 INCH DEPTH INTO EXISTING SOIL, OR PLACE 8 INCHES OF COMPOST-AMENDED SOIL, PER SOIL SPECIFICATION.
4. PLANTING BEDS SHALL RECEIVE 3 INCHES OF COMPOST TILLED IN TO 8-INCH DEPTH, OR MAY SUBSTITUTE 8" OF IMPORTED SOIL CONTAINING 35-40% COMPOST BY VOLUME. MULCH AFTER PLANTING, WITH 4 INCHES OF ARBORIST WOOD CHIP MULCH OR APPROVED EQUAL (6" OF LOOSE WOOD CHIPS AT THE TIME OF PLANTING TO ALLOW SETTLING TO 4").
5. SETBACKS: TO PREVENT UNEVEN SETTLING, DO NOT COMPOST-AMEND SOILS WITHIN 3 FEET OF UTILITY INFRASTRUCTURES (POLES, VAULTS, METERS ETC.). WITHIN ONE FOOT OF PAVEMENT EDGE, CURBS AND SIDEWALKS SOIL SHOULD BE COMPACTED TO APPROXIMATELY 95% PROCTOR TO ENSURE A FIRM SURFACE.
6. SEE SECTION 8.2(B) OF THE VMS FOR SOIL AMENDMENT AND INSTRUCTION PROCEDURES FOR STREET TREE PLANTER STRIPS. ALL STREET TREE PLANTER STRIPS SHALL RECEIVE 40% COMPOST AMENDED SOIL TO THE FULL DEPTH OF THE STREET TREE ROOTBALL.

CITY OF PUYALLUP
DEVELOPMENT ENGINEERING and PUBLIC WORKS DEPARTMENTS

SOIL AMENDMENT AND DEPTH

DRAWN BY	CHECKED BY	APPROVED BY	REVISED BY	CITY STANDARD
LINDA LIAN	CHRIS BEALE	COLLEEN HARRIS	XXXX	
FILE NAME		DATE APPROVED	DATE REVISED	SCALE
F:\DWG\COMMON\STDS\CITYSTDS\STR\01.02.08		08/01/2015	XX/XX/XX	1:1
				01.02.08a

B1 SOIL AMENDMENT AND DEPTH
SCALE: N.T.S.

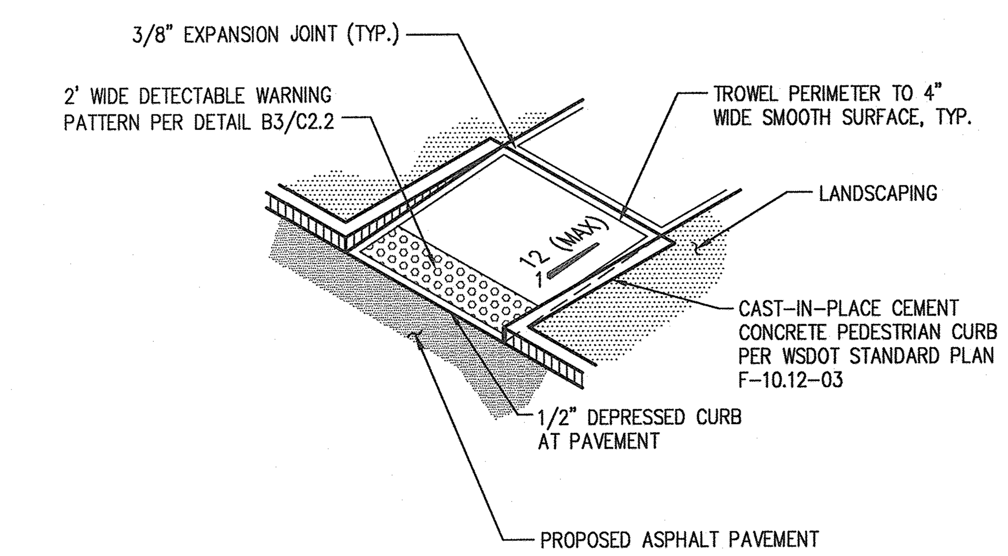

B2 SIDEWALK RAMP
SCALE: N.T.S.

DETECTABLE WARNING PATTERN AREA SHALL BE YELLOW AND IN COMPLIANCE WITH WSDOT STANDARD SPECIFICATION SECTION 8-14.3(3).

DETECTABLE WARNING PATTERNS SHALL BE CREATED BY USING PRE-MANUFACTURED YELLOW TRUNCATED DOME RUBBER/PLASTIC UNITS. SUBMIT PRODUCT DATA FOR APPROVAL PRIOR TO INSTALLATION.

RAMP TEXTURE DETAIL

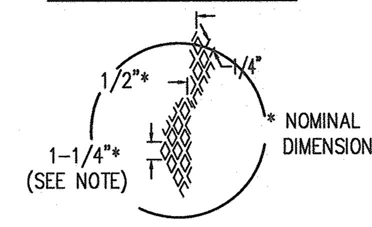

NOTE: LONG AXIS OF DIAMOND PATTERN PERPENDICULAR TO CURB.

DETECTABLE WARNING PATTERN DETAIL

	MIN.	MAX.
A	1 5/8"	2 3/8"
B	5/8"	1 1/2"
C	7/16"	3/4"
D	7/8"	1 7/16"

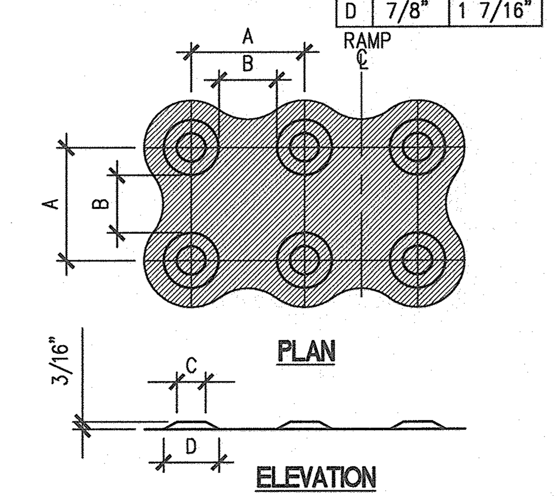

B3 DETECTABLE WARNING PATTERN AND RAMP TEXTURE DETAIL
SCALE: N.T.S.

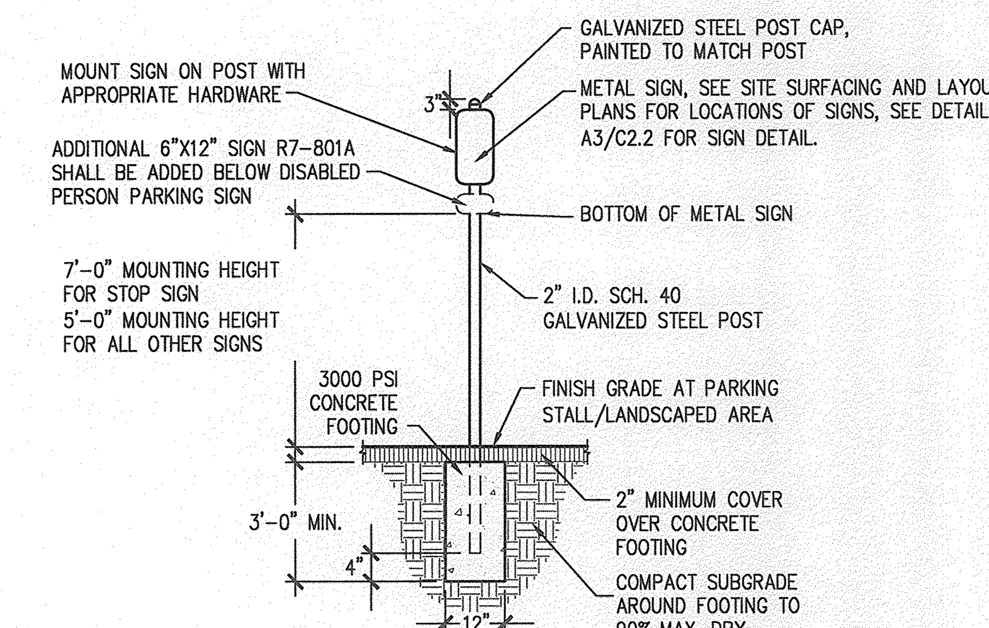

B4 SIGN POST DETAIL
SCALE: N.T.S.

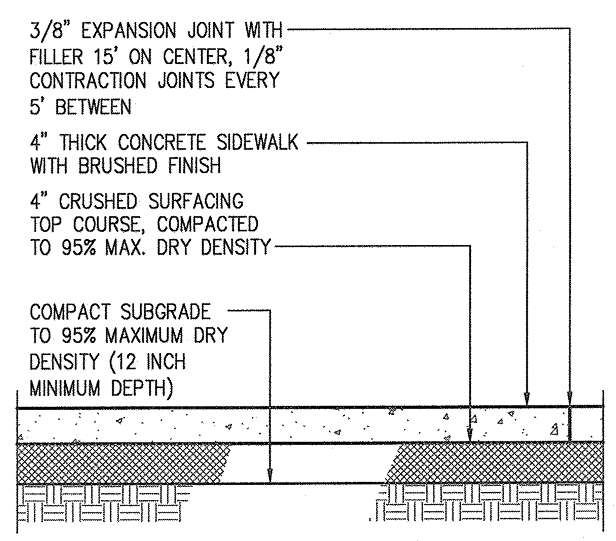

C1 CONCRETE WALK SECTION
SCALE: N.T.S.

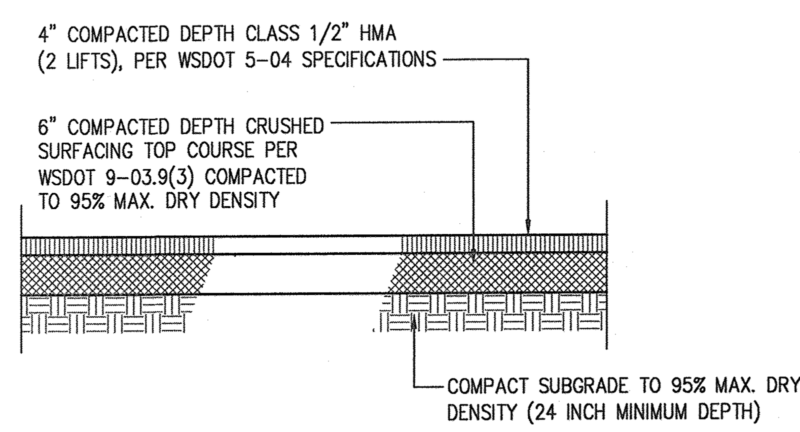

C2 HEAVY DUTY ASPHALT PAVEMENT SECTION
SCALE: N.T.S.

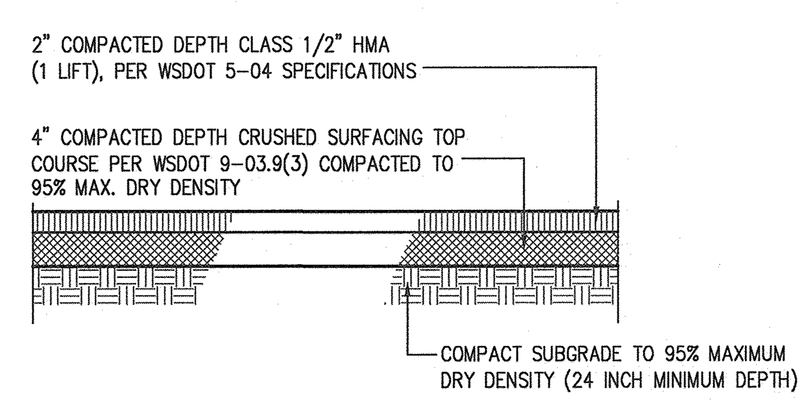

C3 LIGHT DUTY ASPHALT PAVEMENT SECTION
SCALE: N.T.S.

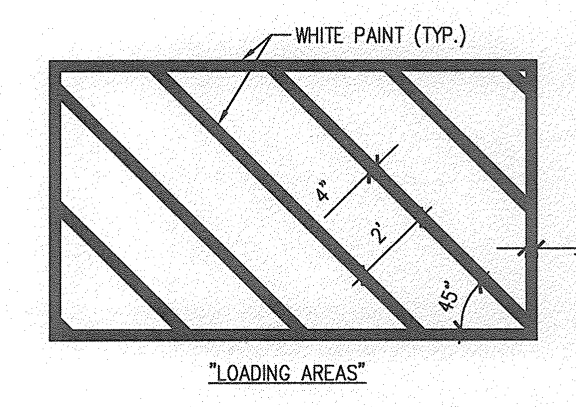

C4 PAVEMENT MARKING DETAIL
SCALE: N.T.S.

NOTES:
1. GRAVEL BED SHALL EXTEND A MINIMUM OF 1' BEYOND EDGE OF PORTABLE AND RAMP SYSTEM ON ALL SIDES. SEE SHEET PLAN VIEW FOR EXTENTS OF GRAVEL BASE.
2. SEE STRUCTURAL PLANS FOR ADDITIONAL FOUNDATION REQUIREMENTS.

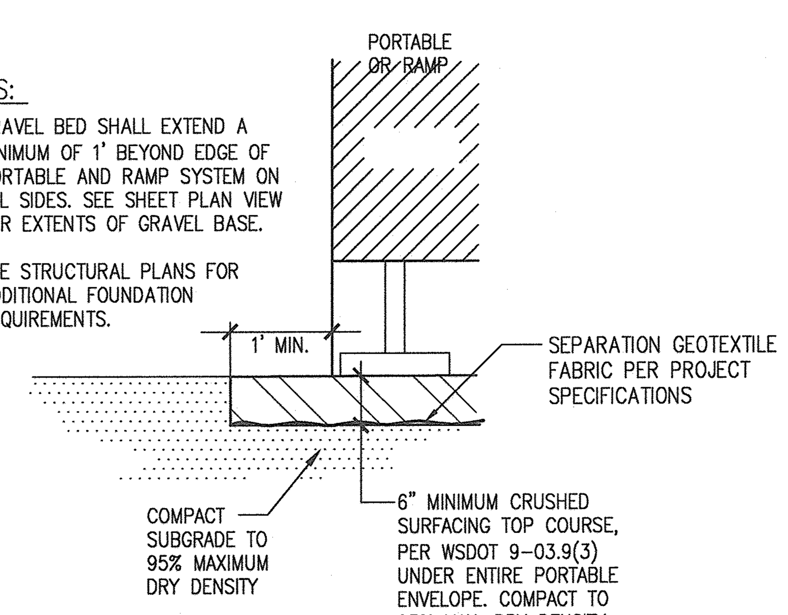

D1 CSTC BED DETAIL
SCALE: N.T.S.

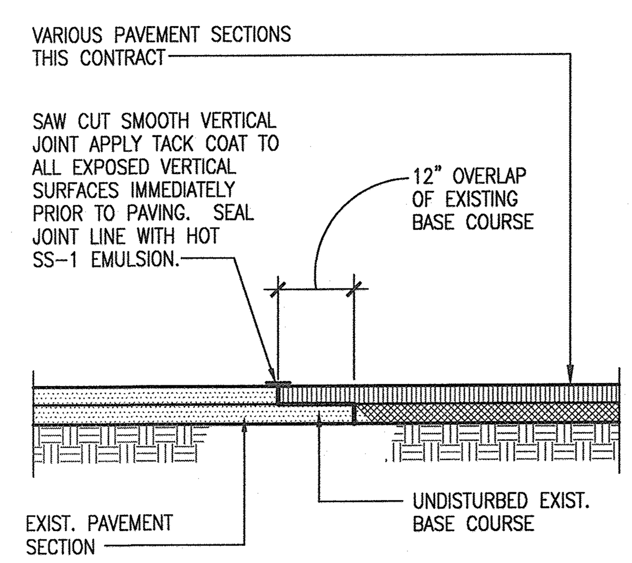

D2 PAVEMENT JOINT SECTION
SCALE: N.T.S.

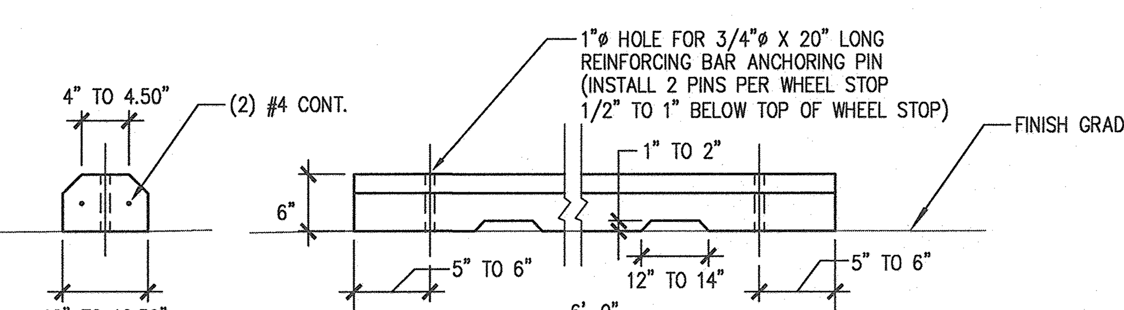

NOTES:
1. PRE-APPROVED WHEEL STOPS ARE 'FOGTITE' BUMPER GUARD OR 'UTILITY VAULT' BUMPER CURB PORT STYLE.
2. HOLD VEHICLE SIDE OF WHEEL STOP 2'-0" TYPICAL FROM ADJACENT CONCRETE WALL, SIDEWALK OR CURB FACE.

D3 PRECAST CONCRETE WHEEL STOP
SCALE: N.T.S.

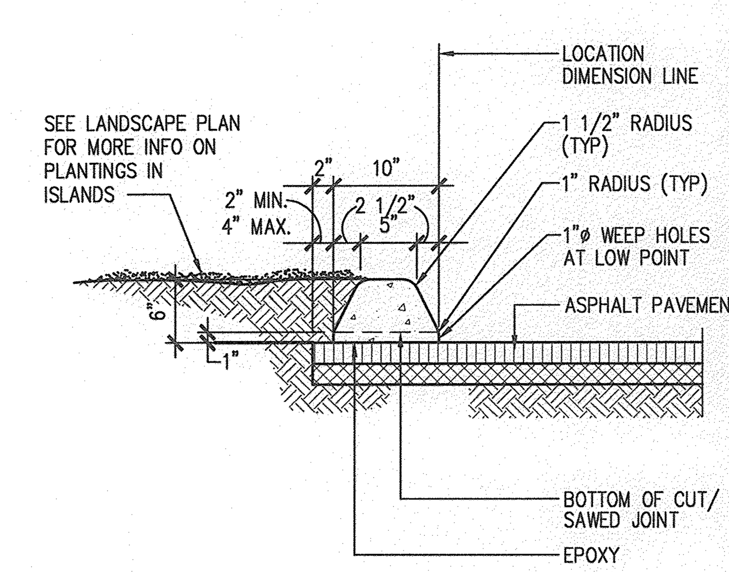

NOTES:
1. EXTRUDED CURB DIMENSIONS PER WSDOT STANDARD PLAN F-10.42-00 TYPE 6
2. PROVIDE CONTRACTION JOINT AT 10'-0" ON CENTER. JOINTS MAY BE FORMED DURING INSTALLATION USING A RIGID DIVIDER OR SAWCUT AFTER CONCRETE CURES TO A MINIMUM STRENGTH

D4 EXTRUDED CONCRETE CURB
SCALE: N.T.S.

REVISIONS: 04-28-2016 PERMIT

APPROVALS: DESIGNED S.H.; DRAWN J.B.; CHECKED R.H.; DATE 04-06-2016; SCALE

SEAL: RICHARD C. HAND, STATE OF WASHINGTON, 26780, REGISTERED PROFESSIONAL ENGINEER, 04/28/16

PREPARED BY
SITTS & HILL ENGINEERS, INC.
CIVIL • STRUCTURAL • SURVEYING
4815 CENTER STREET | TACOMA, WA. 98409
PHONE: (253) 474-9449 | FAX: (253) 474-0153
http://www.sitts-hill-engineers.com/

PREPARED FOR
PUYALLUP SCHOOL DISTRICT NO. 3
323 12TH STREET N.W.
PUYALLUP, WASHINGTON 98371

PROJECT
TRANSPORTATION AND DRIVER TRAINING MODULAR BUILDING
PUYALLUP, WASHINGTON

SHEET TITLE
GRADING, DRAINAGE AND SURFACING DETAILS

SHEET NO.
C2.2
8 OF 11

PROJECT NO.
16785.50

P:\16700\16785\Drawings\16785.50 Driver Training Portable Project\16785.5 - c2.2.dwg last edited: 04/28/16 3:50pm by: watkinsj

SOUTHWEST 1/4 OF SECTION 04, TOWNSHIP 19 NORTH, RANGE 4 EAST WILLAMETTE MERIDIAN

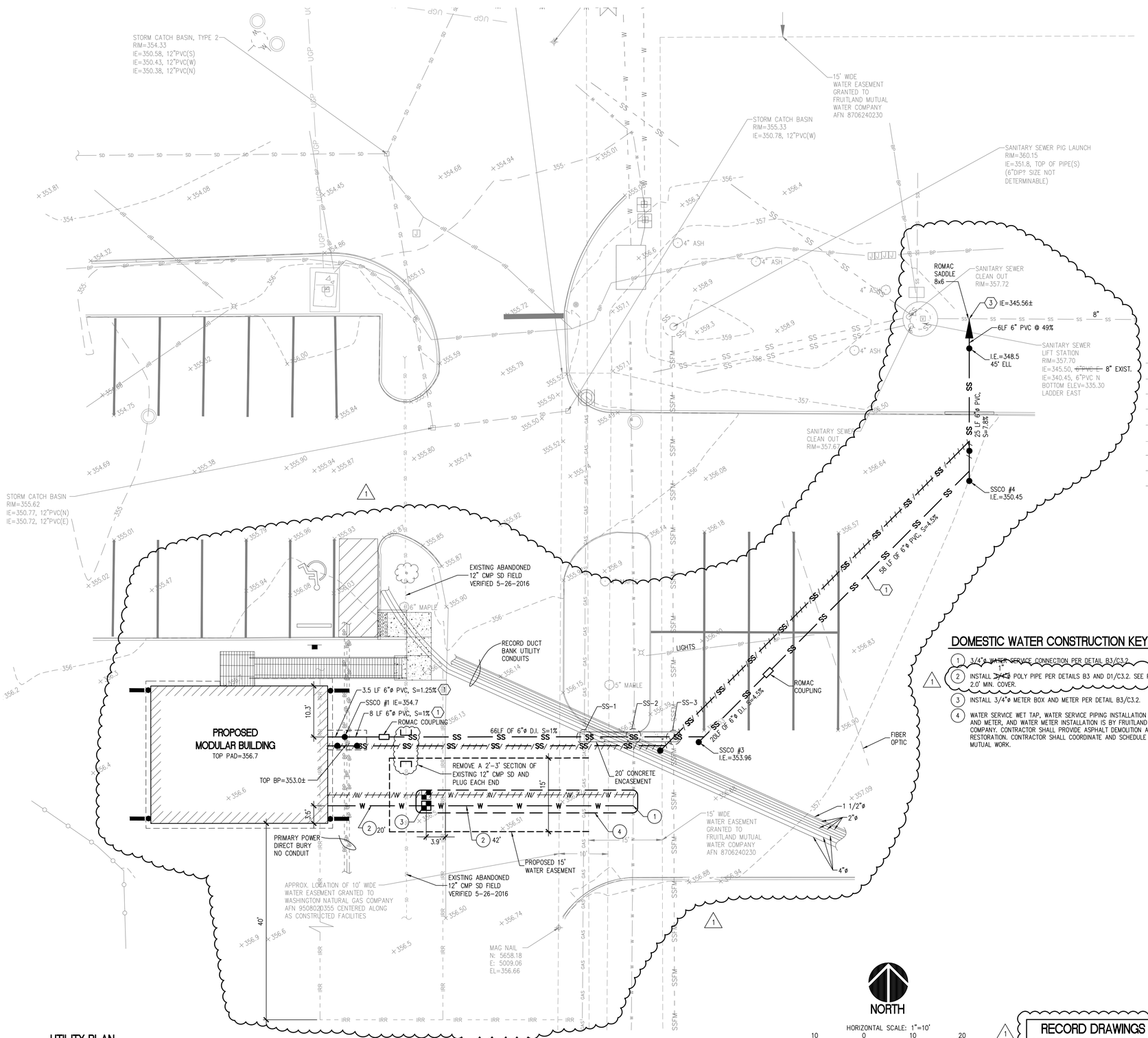

UTILITY PLAN

SCALE: 1"=10'

CALL 2 WORKING DAYS BEFORE YOU DIG
1-800-424-5555
UTILITIES UNDERGROUND LOCATION CENTER

THE BURIED UTILITIES ON THIS PROJECT ARE SHOWN IN THEIR APPROXIMATE LOCATION WHERE KNOWN. OTHER EXISTING BURIED UTILITIES MAY NOT BE SHOWN ON THESE PLANS. THE CONTRACTOR SHALL CONTACT ALL UTILITY COMPANIES AND HAVE THEIR LOCATION MARKED ON THE GROUND PRIOR TO CONSTRUCTION. THE CONTRACTOR WILL PROTECT, OR IMMEDIATELY REPAIR, ANY DAMAGED UTILITY "DISCOVERED" ON THIS PROJECT WITHOUT ADDITIONAL COSTS.

@00QNUDC

BY _____
CITY OF PUYALLUP
ENGINEERING SERVICES

DATE _____

NOTE:
THIS APPROVAL IS VOID AFTER 1 YEAR FROM APPROVAL DATE.

THE CITY WILL NOT BE RESPONSIBLE FOR ERRORS AND/OR OMISSIONS ON THESE PLANS.

FIELD CONDITIONS MAY DICTATE CHANGES TO THESE PLANS AS DETERMINED BY THE ENGINEERING SERVICES MANAGER.

LEGEND

EXISTING FEATURES-	PROPOSED FEATURES-	
SURVEY CONTROL POINT	SS	SIDE SEWER PIPE
SANITARY SEWER MANHOLE	W	DOMESTIC WATER SERVICE LINE
SANITARY SEWER CLEAN OUT	●	CLEANOUT
STORM CATCH BASIN		
WATER METER		
JUNCTION BOX		
POWER VAULT		
LIGHT POLE		
UTILITY VAULT		
TREE, AS NOTED		
BURIED POWER LINE		
BURIED WATER LINE		
BURIED STORM LINE		
BURIED SANITARY LINE		
CHAIN LINK FENCE		
BURIED RECORD STORM LINE		
BURIED RECORD GAS LINE		
BURIED RECORD WATER LINE		
BURIED RECORD SANITARY FORCEMAIN		

SEWER CONSTRUCTION KEY NOTES:

1. SANITARY SEWER PIPE TO BE 6"ø PVC, SDR-35 IN ACCORDANCE WITH ASTM D-3034. PIPE TO BE SLOPED PER PLAN AT A MINIMUM OF 1.25% SLOPE. INSTALL PIPE TRENCHING, BEDDING AND BACKFILL PER DETAIL D1/C3.1.
2. ~~INSTALL SIDE SEWER CONNECTION WITH SAMPLING CONNECTION PER DETAIL B1/C3.1.~~
3. TAP SIDE SEWER PIPE INTO EXISTING SEWER LINE IN ACCORDANCE WITH DETAIL B3/C3.1.

GENERAL NOTES:

1. SIZE, TYPE, AND DEPTH OF EXISTING WATER MAIN, SANITARY SEWER FORCEMAIN AND GAS MAIN ARE UNKNOWN. CONTRACTOR IS RESPONSIBLE FOR POT-HOLING EACH UTILITY AS NECESSARY TO VERIFY HORIZONTAL AND VERTICAL LOCATION AT POINT OF CROSSING. THIS SHALL BE DONE PRIOR TO SIDE SEWER INSTALLATION. THE CONTRACTOR IS TO NOTIFY THE ENGINEER IF ANY CONFLICTS OCCUR.
2. SIDE SEWER CONNECTION WITH SAMPLING STATION SHALL BE INSTALLED PER DETAIL B1/C3.1.
3. CLEANOUTS IN DRIVING AREAS MUST BE BROUGHT TO THE SURFACE WITH CLEANOUTS RING AND COVER DESIGNED FOR HS-20 LOADING. PER DETAIL B2/C3.1. CLEANOUTS IN LANDSCAPE AREAS SHALL HAVE CONCRETE COLLARS PER DETAIL B4/C3.1
4. RE-ROUTE EXISTING IRRIGATION AS REQUIRED TO AVOID ANY CONFLICTS WITH NEW PORTABLE.
5. ALL WORKMANSHIP AND MATERIALS SHALL BE IN ACCORDANCE WITH CITY OF PUYALLUP STANDARDS AND THE MOST CURRENT COPY OF THE WASHINGTON STATE SPECIFICATION FOR ROAD, BRIDGE AND MUNICIPAL CONSTRUCTION (WSDOT/APWA) AND AS AMENDED BY THE STATE.
6. COORDINATE ALL UTILITY CROSSINGS WITH THE SANITARY SEWER CROSSING TABLE BELOW AND INSTALL IN ACCORDANCE WITH DETAIL B1 AND B2 ON C3.2.

DOMESTIC WATER CONSTRUCTION KEY NOTES:

1. ~~3/4"ø WATER SERVICE CONNECTION PER DETAIL B3/C3.2.~~
2. INSTALL ~~3/4"ø~~ 1" POLY PIPE PER DETAILS B3 AND D1/C3.2. SEE PLAN FOR LENGTH, 2.0' MIN. COVER.
3. INSTALL 3/4"ø METER BOX AND METER PER DETAIL B3/C3.2.
4. WATER SERVICE WET TAP, WATER SERVICE PIPING INSTALLATION BETWEEN MAIN AND METER, AND WATER METER INSTALLATION IS BY FRUITLAND MUTUAL WATER COMPANY. CONTRACTOR SHALL PROVIDE ASPHALT DEMOLITION AND SURFACING RESTORATION. CONTRACTOR SHALL COORDINATE AND SCHEDULE FRUITLAND MUTUAL WORK.

SANITARY SEWER CROSSING TABLE

CROSSING NO. SS-1	TOP=353.2 (1) GAS 2", ~~BOTTOM=351.06~~	IE=354.2 SEWER 6", ~~TOP=349.56~~	CLEARANCE=1.0'± ~~CLEARANCE=1.5'~~
CROSSING NO. SS-2	TOP=352.90 (2) WATER 8", ~~BOTTOM=352.09~~	IE=354.1 SEWER 6", ~~TOP=349.44~~	CLEARANCE=1.2'± ~~CLEARANCE=2.65'~~
CROSSING NO. SS-3	TOP=353.2± (3) SSFM 4", ~~BOTTOM=351.04~~	IE=354.02 SEWER 6", ~~TOP=349.34~~	CLEARANCE=0.82'± ~~CLEARANCE=1.70'~~

~~(1) GAS ESTIMATED AT 2"ø AT 5' COVER.~~
~~(2) WATER ELEVATION ESTIMATED AT 42" COVER.~~
~~(3) SSFM ESTIMATED AT 5' COVER.~~

SSCO SCHEDULE

STRUCTURE ID	ELEVATION RIM	ELEVATION INVERT	NOTES*
SSCO #1	356.50	IE=354.7 ~~IE=350.40~~	CONCRETE COLLAR, SEE GENERAL NOTE 3
~~SSCO #2~~	~~356.50~~	~~IE=350.35~~	~~CONCRETE COLLAR, SEE GENERAL NOTE 3~~
SSCO #3	356.48	IE=353.96 ~~IE=348.89~~	SEE GENERAL NOTE 3
SSCO #4	356.98	IE=350.45 ~~IE=347.78~~	SEE GENERAL NOTE 3

* ALL CLEANOUTS MUST BE BROUGHT TO GRADE WITH RINGS AND COVERS. SEE GENERAL NOTE 3. CLEANOUT MUST HAVE DOUBLE SWEEP STRAIGHT TEE RISERS UNLESS OTHERWISE SHOWN.

RECORD DRAWINGS
INFORMATION PROVIDED BY CONTRACTOR.

REVISIONS

1	RECORD DRAWING	06-20-2016
	PERMIT	04-28-2016

APPROVALS

DESIGNED	S.H.
DRAWN	J.B.
CHECKED	R.H.
DATE	04-06-2016
SCALE	AS NOTED

SEAL

RICHARD C. HAMILTON, STATE OF WASHINGTON, REGISTERED PROFESSIONAL ENGINEER, 06/20/16

PREPARED BY

SITTS & HILL ENGINEERS, INC.
CIVIL • STRUCTURAL • SURVEYING
4815 CENTER STREET | TACOMA, WA. 98409
PHONE: (253) 474-9449 | FAX: (253) 474-0153
http://www.sitts-hill-engineers.com/

PREPARED FOR

PUYALLUP SCHOOL DISTRICT NO. 3
323 12TH STREET N.W.
PUYALLUP, WASHINGTON 98371

PROJECT

TRANSPORTATION AND DRIVER TRAINING MODULAR BUILDING
PUYALLUP, WASHINGTON

SHEET TITLE

UTILITY PLAN

SHEET NO.

C3.0
9 OF 11

PROJECT NO.

16785.50

P:\16700\16785\Drawings\16785.50 Driver Training Portable Project\16785.5 - c3.0.dwg last edited: 06/20/16 3:48pm by: wilkins|

SOUTHWEST 1/4 OF SECTION 04, TOWNSHIP 19 NORTH, RANGE 4 EAST WILLAMETTE MERIDIAN

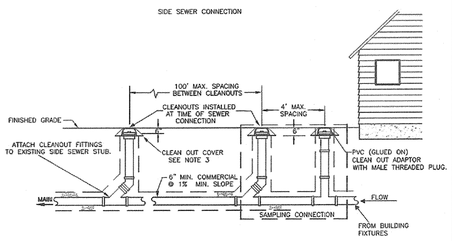

NOTES:

1. SAMPLING CONNECTION SHALL BE INSTALLED OUT SIDE WITH UNOBSTRUCTED ACCESS AT ALL TIMES.
2. A SAMPLING CONNECTION SHALL BE INSTALLED FOR EACH COMMERCIAL / RETAIL UNIT OR SPACE.
3. CLEAN OUT AND SAMPLING CONNECTION COVERS:
   A) FOR NON-VEHICULAR TRAFFIC INSTALLATIONS USE "CARSON" MODEL 910 GREEN YARD BOX WITH BOLT DOWN LID MARKED SEWER OR APPROVED EQUAL.
   B) FOR ASPHALT, GRAVEL, OR TRAFFIC INSTALLATIONS SEE CITY STANDARD DETAIL NO. 04.03.05 FRAME AND COVER SECTION.
4. EACH CLEANOUT ASSEMBLY SHALL CONSIST OF: ONE CLEANOUT ADAPTER, HUB x FEMALE, FIPT, PVC SI AND ONE CLEANOUT PLUG, MOPT WITH RAISED NUT, PVC SDR35.

CITY OF PUYALLUP
DEVELOPMENT ENGINEERING and PUBLIC WORKS DEPARTMENTS

COMMERCIAL SIDE SEWER CONNECTION WITH SAMPLING CONNECTION

DRAWN BY	CHECKED BY	APPROVED BY	REVISED BY	CITY STANDARD
HM 10/30/04-8/9/2010A	LINDA LIAN	COLLEEN HARRIS	LINDA LIAN	04.03.04
FILE NAME: F:\PROJECTS\COMMON\STDS\CITY\2004\04_03.04.15\04.03.04	DATE APPROVED: 02/06/2009	DATE REVISED: 10/23/11	SCALE: NS	

B1 COMMERCIAL SIDE SEWER CONNECTION WITH SAMPLING CONNECTION
SCALE: N.T.S.

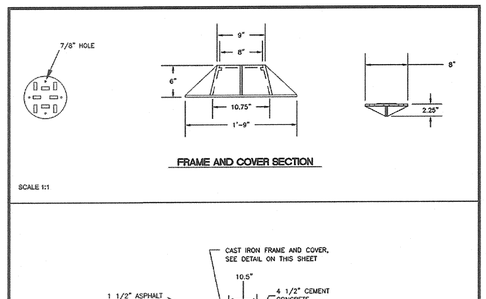

NOTES

1. NEAT LINE CUT SHALL BE SEALED AT THE TOP WITH A HOT PAVING GRADE ASPHALT AND FACE OF CUT TACKED.
2. ALL MATERIAL SHALL CONFORM TO THE 1991 STANDARD SPECIFICATIONS FOR ROAD, BRIDGE, AND MUNICIPAL CONSTRUCTION PREPARED BY THE WASHINGTON STATE DEPARTMENT OF TRANSPORTATION AND AMERICAN PUBLIC WORKS ASSOCIATION, WASHINGTON STATE CHAPTER.
3. MACHINE BEARING FACES OF FRAME AND COVER TO INSURE POSITIVE FIT.
4. EACH CLEAN OUT ASSEMBLY SHALL CONSIST OF: ONE CLEAN OUT ADAPTOR (HUB X FEMALE INSIDE PIPE THREAD, P.V.C. SLIP IN), AND ONE CLEAN OUT PLUG (MALE OUTSIDE PIPE THREAD WITH RAISED NUT, P.V.C. SDR35).

CITY OF PUYALLUP
DEVELOPMENT ENGINEERING and PUBLIC WORKS DEPARTMENTS

SIDE SEWER CLEAN OUT WHEN PLACED IN DRIVEWAY

DRAWN BY	CHECKED BY	APPROVED BY	REVISED BY	CITY STANDARD
HM 10/30/04-8/9/2010A	LINDA LIAN	COLLEEN HARRIS	XXXX	04.03.05
FILE NAME: F:\PROJECTS\COMMON\STDS\CITY\2004\04_03.04.15\04.03.05	DATE APPROVED: 02/06/2009	DATE REVISED: XX/XX/XX	SCALE:	

B2 SIDE SEWER CLEAN OUT WHEN PLACED IN DRIVEWAY
SCALE: N.T.S.

NOTES FOR CONNECTING TAPS ON EXISTING SEWER MAINS

1. THE TEE FITTING SHALL BE A ROMAC INDUSTRIES STYLE "CB" SEWER SADDLE (OR APPROVED EQUAL). ONLY NEW SADDLE AND PARTS SHALL BE INSTALLED. DUE TO PIPE SIZE MATERIALS OR PIPE CONDITION, THE CITY ENGINEER MAY REQUIRE AN ALTERNATE METHOD/MATERIAL BE USED.
2. THE SEWER MAIN TAP SHALL BE CUT WITH A SEWER PIPE TAPPING MACHINE (HOLE SAW) CAPABLE OF RETAINING THE COUPON.
3. THE ROUND HOLE CUT INTO THE SEWER MAIN SHALL BE NO LARGER THAN THE INSIDE DIAMETER OF THE SADDLE GASKET. THE HOLE SAW CUT EDGES SHALL BE SMOOTH.
4. THE COUPON SHALL BE RETAINED AND SURRENDERED TO THE INSPECTOR. THE PERMIT HOLDER WILL PAY ALL COSTS ASSOCIATED WITH THE LOCATION AND RETRIEVAL OF A LOST COUPON. ADDITIONALLY THE PERMIT HOLDER WILL BE HELD LIABLE FOR ANY SUBSEQUENT DAMAGES CAUSED BY A LOST COUPON.
5. BOLTS SHALL BE TORQUED TO MANUFACTURE SPECIFICATIONS, THEN RETORQUED AFTER 10 MINUTES.
6. NO TAPS SHALL BE ALLOWED ON EXISTING SEWER MAINS OVER 18" IN DIAMETER. CONNECTIONS INTO SEWER MAINS OVER 18" IN DIAMETER SHALL INTERSECT THE SEWER MAIN IN A MANHOLE. IN SOME CASES THE CITY ENGINEER MAY ALLOW A VARIANCE TO THIS REQUIREMENT.
7. ALL TRENCHING, BEDDING, AND BACKFILL SHALL BE IN ACCORDANCE WITH CITY STANDARD DETAIL NO. 06.01.01. ALL ASPHALT REPAIR SHALL BE IN ACCORDANCE WITH CITY STANDARD NO. 01.01.20. ALL ADDITIONAL UTILITY AND RIGHT OF WAY REPAIRS SHALL BE INACCORDANCE WITH THE "CITY STANDARDS" MANUAL.
8. THE CITY OF PUYALLUP WILL CONDUCT A "SEWER MAIN VIDEO INSPECTION" OF THE SEWER TAP. THE PERMIT HOLDER WILL BE REQUIRED TO REPAIR ANY SEWER TAP CONSTRUCTION DEFECTS FOUND BY THE CITY INSPECTORS. THE COST OF ALL REPAIRS AND SUBSEQUENT "SEWER MAIN VIDEO INSPECTIONS" WILL BE THE RESPONSIBILITY OF THE PERMIT HOLDER. THE DAMAGE DEPOSIT POSTED BY THE BUILDER WILL BE HELD UNTIL PROBLEMS ARE CORRECTED. DUE TO PUBLIC HEALTH AND SAFETY, BUILDING OCCUPANCY WILL NOT BE ALLOWED UNTIL REPAIRS ARE COMPLETED AND ACCEPTED BY THE CITY ENGINEER.

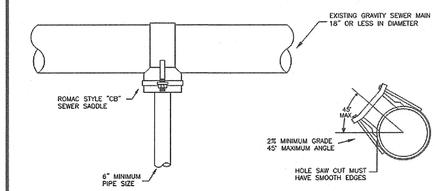

CITY OF PUYALLUP
DEVELOPMENT ENGINEERING and PUBLIC WORKS DEPARTMENTS

SEWER MAIN TAP

DRAWN BY	CHECKED BY	APPROVED BY	REVISED BY	CITY STANDARD
HM 10/30/04-8/9/2010A	LINDA LIAN	COLLEEN HARRIS	XXXX	04.02.01
FILE NAME: F:\PROJECTS\COMMON\STDS\CITY\2009\09_03\04.02.01	DATE APPROVED: 07/01/2009	DATE REVISED: XX/XX/XX	SCALE: 1/2	

B3 SEWER MAIN TAP
SCALE: N.T.S.

APPROVED

BY Colleen Harris
CITY OF PUYALLUP
ENGINEERING SERVICES

DATE 5-2-16

NOTE:
THIS APPROVAL IS VOID AFTER 1 YEAR FROM APPROVAL DATE.

THE CITY WILL NOT BE RESPONSIBLE FOR ERRORS AND/OR OMISSIONS ON THESE PLANS.

FIELD CONDITIONS MAY DICTATE CHANGES TO THESE PLANS AS DETERMINED BY THE ENGINEERING SERVICES MANAGER.

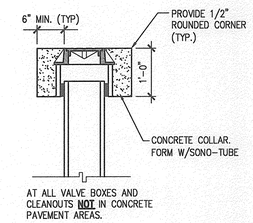

B4 CLEAN OUT CONCRETE COLLAR DETAIL
SCALE: N.T.S.

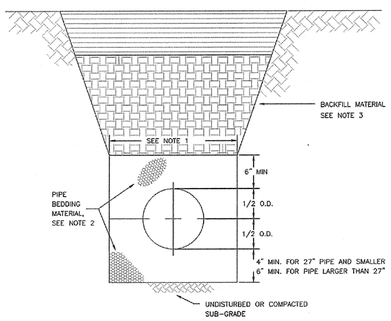

1. TRENCHING SHALL MEET THE REQUIREMENTS OF SECTION 7-08.3(1)A AND 2-06.3(1) OF THE WASDOT SPECIFICATIONS.
2. BEDDING MATERIAL FOR PIPE SHALL BE CRUSHED OR PARTIALLY CRUSHED MATERIAL CONFORMING TO THE FOLLOWING GRADATION:

SIEVE SIZE	PERCENT PASSING
1-1/4" SQUARE	100
1/4" SQUARE	30-50
U.S. NO. 40	3-18
U.S. NO. 200	7.0 MAX.
SAND EQUIVALENT	35 MIN.

ALL PERCENTAGES ARE BY WEIGHT.
NATIVE MATERIAL SHALL NOT BE USED FOR PIPE BEDDING.

3. GRAVEL BACKFILL FOR ABOVE BEDDING SHALL CONSIST OF CRUSHED, PROCESSED, OR NATURALLY OCCURRING GRANULAR MATERIAL. IT SHALL BE ESSENTIALLY FREE FROM VARIOUS TYPES OF WOOD WASTE OR OTHER EXTRANEOUS OR OBJECTIONABLE MATERIALS. IT SHALL HAVE SUCH CHARACTERISTICS OF SIZE AND SHAPE THAT IT WILL COMPACT READILY.

CITY OF PUYALLUP
DEVELOPMENT ENGINEERING and PUBLIC WORKS DEPARTMENTS

PIPE TRENCHING BEDDING AND BACKFILL

DRAWN BY	CHECKED BY	APPROVED BY	REVISED BY	CITY STANDARD
HM 10/30/04-8/9/2010A	LINDA LIAN	COLLEEN HARRIS	LINDA LIAN	06.01.01
FILE NAME: F:\PROJECTS\COMMON\STDS\CITY\2004\04_03\06.01.01	DATE APPROVED: 02/06/2009	DATE REVISED: 10/23/11	SCALE: 1:8	

D1 PIPE TRENCHING BEDDING AND BACKFILL
SCALE: N.T.S.

REVISIONS

PERMIT	04-28-2016

APPROVALS

DESIGNED	S.H.
DRAWN	J.B.
CHECKED	R.H.
DATE	04-06-2016
SCALE	AS NOTED

SEAL

RICHARD C. HANSEN — STATE OF WASHINGTON — 35750 — REGISTERED PROFESSIONAL ENGINEER — 04/28/16

PREPARED BY

SITTS & HILL ENGINEERS, INC.
CIVIL ▪ STRUCTURAL ▪ SURVEYING
4815 CENTER STREET | TACOMA, WA. 98409
PHONE: (253) 474-9449 | FAX: (253) 474-0153
http://www.sitts-hill-engineers.com/

PREPARED FOR

PUYALLUP SCHOOL DISTRICT NO. 3
323 12TH STREET N.W.
PUYALLUP, WASHINGTON 98371

PROJECT
TRANSPORTATION AND DRIVER TRAINING MODULAR BUILDING
PUYALLUP, WASHINGTON

SHEET TITLE
SEWER UTILITY NOTES AND DETAILS

SHEET NO.
C3.1
10 OF 11

PROJECT NO.
16785.50

P:\16700\16785\Drawings\16785.50 Driver Training Portable Project\16785.5 - c3.1.dwg last edited: 04/28/16 3:59pm by: wilkinj

SOUTHWEST 1/4 OF SECTION 04, TOWNSHIP 19 NORTH, RANGE 4 EAST WILLAMETTE MERIDIAN

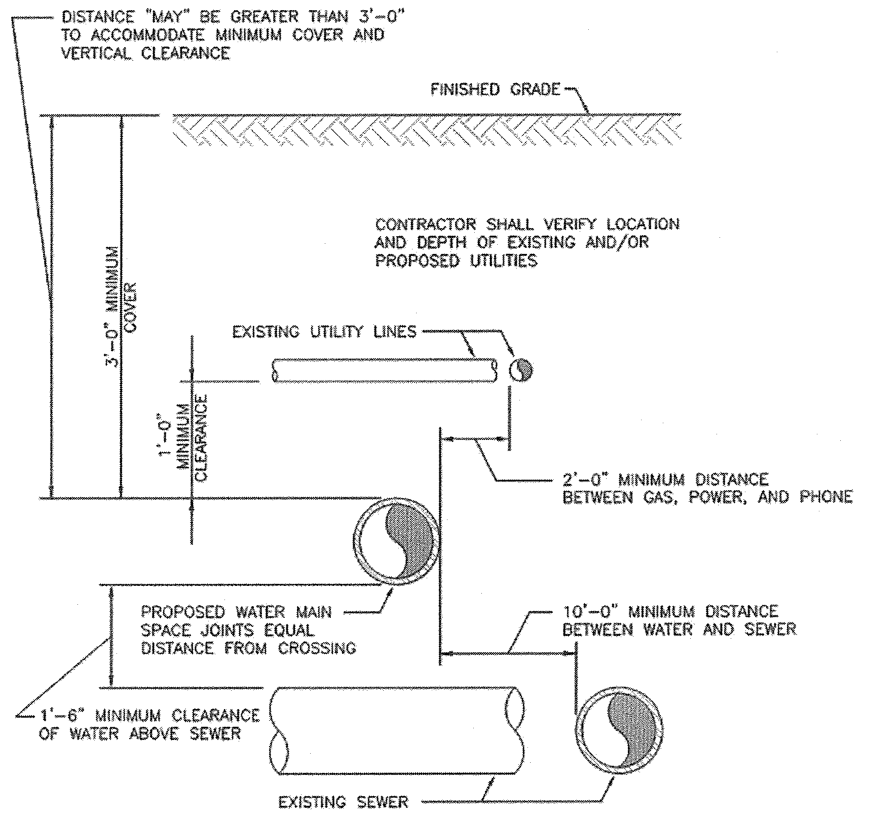

CITY STANDARD 03.01.03-2 COVERS ADDITIONAL NOTES FOR THIS DETAIL.

CITY OF PUYALLUP
DEVELOPMENT ENGINEERING and PUBLIC WORKS DEPARTMENTS

WATER MAIN CROSSING OTHER UTILITIES

DRAWN BY	CHECKED BY	APPROVED BY	REVISED BY	CITY STANDARD
BRIAN JOHNSON	LINDA LIAN	COLLEEN HARRIS	XXXX	03.01.03-1
FILE NAME: F:\DWG\COMMON\STDS\CITY\2011\03.01.03-1		DATE APPROVED: 05/31/2011	DATE REVISED: XX/XX/XX	SCALE: NTS

B1 WATER MAIN CROSSING OTHER UTILITIES
SCALE: N.T.S.

NOTES FOR WATER MAIN CROSSING OTHER UTILITIES
CITY STANDARD 03.01.03-1

WHEN LOCAL CONDITIONS PREVENT THE SEPARATIONS DESCRIBED ON CITY STANDARD 03.01.03-1, A SEWER MAY BE LAID CLOSER THAN 10-FEET HORIZONTALLY OR 18-INCHES VERTICALLY TO A WATER LINE, PROVIDED THE GUIDELINES BELOW ARE FOLLOWED:

UNUSUAL CONDITIONS (PARALLEL SYSTEMS)

1. SEWER LINE IS LAID IN A SEPARATE TRENCH FROM THE WATER LINE.
2. WHEN 18-INCHES VERTICAL SEPARATION CANNOT BE OBTAINED, THE SEWER SHALL BE CONSTRUCTED OF MATERIALS AND JOINTS THAT ARE EQUIVALENT TO WATER MAIN STANDARDS OF CONSTRUCTION AND SHALL BE PRESSURE TESTED TO ENSURE WATER TIGHTNESS PRIOR TO BACKFILLING.
3. THE WATER LINE SHALL BE PLACED ON A BENCH OF UNDISTURBED EARTH WITH THE BOTTOM OF THE WATER PIPE AT LEAST 18-INCHES ABOVE THE CROWN OF THE SEWER, AND SHALL HAVE AT LEAST 5-FEET OF HORIZONTAL SEPARATION AT ALL TIMES. THE CITY RESERVES THE RIGHT TO REQUIRE SUPPLEMENTAL MITIGATION EFFORTS, SUCH AS IMPERMEABLE BARRIERS OR OTHER MEANS, FOR ADDITIONAL PROTECTION.
4. THE SEWER SHALL NOT BE INSTALLED IN THE SAME DITCH AS A POTABLE WATER LINE WITHOUT PRIOR APPROVAL OF THE CITY OF PUYALLUP.

UNUSUAL CONDITIONS (PERPENDICULAR SYSTEMS)

A. GRAVITY SEWERS PASSING UNDER WATER LINES (ALL OF THE FOLLOWING APPLY)

1. ONE FULL SEGMENT (NOT LESS THAN 18-FEET LONG) OF DUCTILE IRON CLASS 52 WATER PIPE, AND THE LONGEST STANDARD SEWER PIPE LENGTH AVAILABLE FROM THE MANUFACTURER SHALL BE USED WITH THE PIPES CENTERED TO MAXIMIZE JOINT SEPARATION.
2. STANDARD GRAVITY-SEWER MATERIAL ENCASED IN CONCRETE OR IN A ONE-QUARTER-INCH THICK CONTINUOUS STEEL, DUCTILE IRON, OR PRESSURE RATED PVC PIPE WITH A DIMENSION RATIO (THE RATIO OF THE OUTSIDE DIAMETER TO THE PIPE WALL THICKNESS) OF 18 OR LESS, WITH ALL VOIDS PRESSURE-GROUTED WITH SAND-CEMENT GROUT OR BENTONITE.

   EXAMPLE OF DIMENSION RATIO (DR): OUTSIDE PIPE DIAMETER DIVIDED BY THE WALL THICKNESS OR OD/T. FOR 8-INCH SCH. 80 PVC PIPE (T=0.5 INCHES) THE DR IS 8.625/0.5=17.25

B. GRAVITY SEWER PASSING OVER WATER LINES

WATER LINES SHALL BE PROTECTED BY PROVIDING:

1. A VERTICAL SEPARATION OF AT LEAST 18-INCHES BETWEEN THE INVERT OF THE SEWER AND THE CROWN OF THE WATER LINE.
2. ADEQUATE STRUCTURAL SUPPORT FOR THE SEWER LINE TO PREVENT EXCESSIVE DEFLECTION OF JOINTS AND SETTLING ON AND BREAKING OF THE WATER LINE.
3. THE SEWER PIPE SHALL BE THE LONGEST STANDARD SEWER PIPE LENGTH AVAILABLE FROM THE MANUFACTURER WITH THE WATER AND SEWER PIPES CENTERED TO MAXIMIZE JOINT SEPARATION.
4. THE SEWER LINE CASING EQUIVALENT TO THAT SPECIFIED IN A(2) ABOVE.

CITY OF PUYALLUP
DEVELOPMENT ENGINEERING and PUBLIC WORKS DEPARTMENTS

WATER MAIN CROSSING OTHER UTILITIES (NOTES)

DRAWN BY	CHECKED BY	APPROVED BY	REVISED BY	CITY STANDARD
BRIAN JOHNSON	LINDA LIAN	COLLEEN HARRIS	XXXX	03.01.03-2
FILE NAME: F:\DWG\COMMON\STDS\CITY\2011\03.01.03-2		DATE APPROVED: 05/31/2011	DATE REVISED: XX/XX/XX	SCALE: NTS

B2 WATER MAIN CROSSING OTHER UTILITIES NOTES
SCALE: N.T.S.

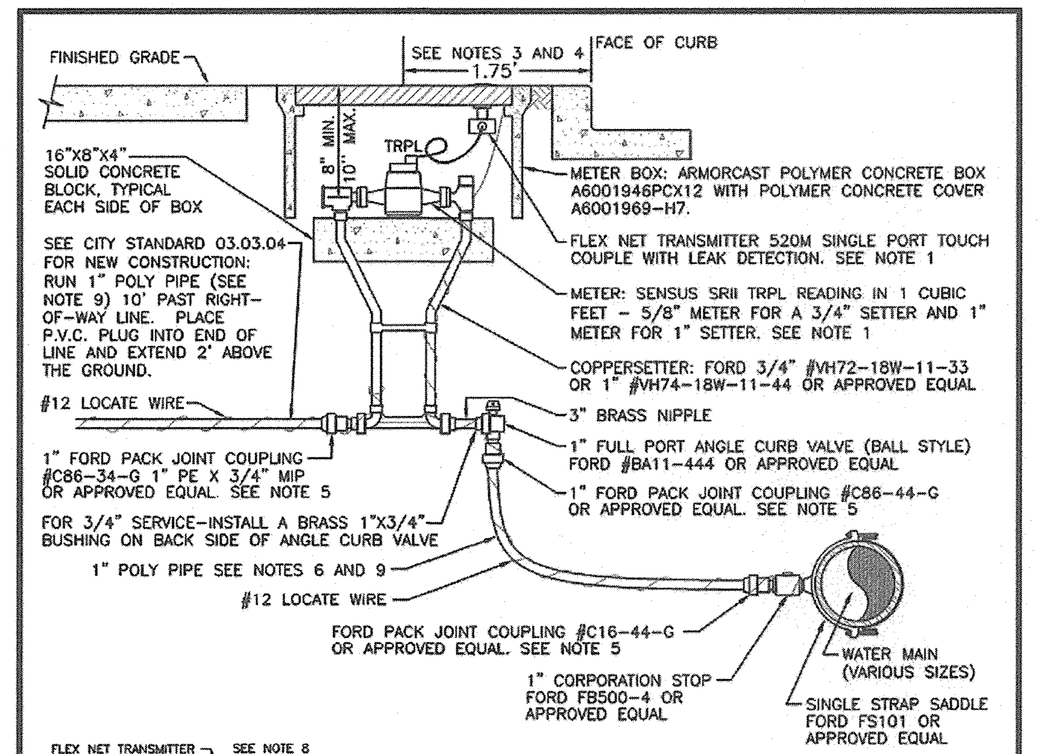

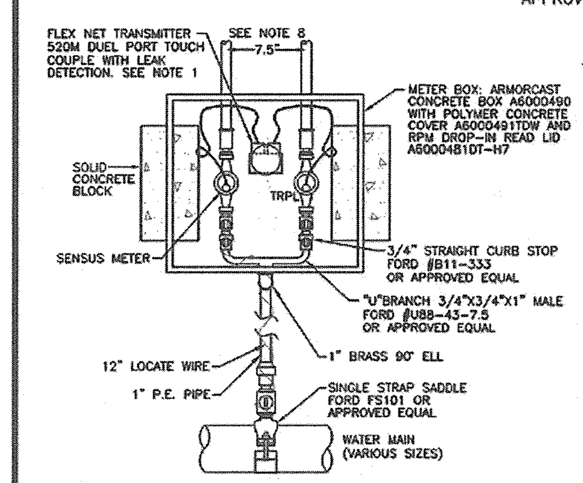

DUAL SERVICE CONNECTION

NOTES:

1. FOR SINGLE FAMILY RESIDENTIAL CONSTRUCTION, THE CITY SHALL SUPPLY AND INSTALL THE WATER METER AND TRANSMITTER AT THE TIME OF OCCUPANCY. FOR COMMERCIAL CONSTRUCTION THE CONTRACTOR SHALL SUPPLY AND INSTALL THE METER AND TRANSMITTER.
2. ALL MATERIAL AND FITTINGS SHALL BE AS SPECIFIED OR AN APPROVED EQUAL.
3. NORMALLY THE WATER METER BOX SHOULD BE LOCATED IN THE PLANTING STRIP. IF SIDEWALK IS AGAINST THE CURB, PLACE METER BOX DIRECTLY BEHIND THE SIDEWALK.
4. THE WATER METER BOX SHALL NOT BE LOCATED IN IMPERVIOUS SURFACES.
5. ALL COUPLINGS SHALL USE PIPE INSERT STIFFENERS.
6. THE WATER SERVICE LINE SHALL HAVE 36" OF COVER BELOW FINISHED GRADE WITHIN THE RIGHT-OF-WAY. THE WATER SERVICE LINE SHALL BE ONE CONTINUOUS PIECE WITH NO SPLICES.
7. WATER MAIN SHALL HAVE A MINIMUM COVER OF 36" IN IMPROVED RIGHT-OF-WAY, AND A MINIMUM COVER OF 48" IN UNIMPROVED RIGHT-OF-WAY AND EASEMENTS.
8. DUEL SERVICE SHALL BE CENTERED ON PROPERTY LINE.
9. ALL POLY PIPE SHALL BE HIGH DENSITY POLY (IRON PIPE SIZE) MEETING ASTM D-2239-SIDR 7 (PE 3408), 200 PSI MINIMUM.

CITY OF PUYALLUP
DEVELOPMENT ENGINEERING and PUBLIC WORKS DEPARTMENTS

3/4" OR 1" WATER SERVICE CONNECTION

DRAWN BY	CHECKED BY	APPROVED BY	REVISED BY	CITY STANDARD
BRIAN JOHNSON	PATRICK SHEEHE	MARK PALMER	BRIAN JOHNSON	03.03.01
FILE NAME: F:\DWG\COMMON\STDS\CITY\2009\03_WTR\03.03.01		DATE APPROVED: 09/16/2009	DATE REVISED: 04/16/2015	SCALE: NTS

B3 3/4" OR 1" WATER SERVICE CONNECTION
SCALE: N.T.S.

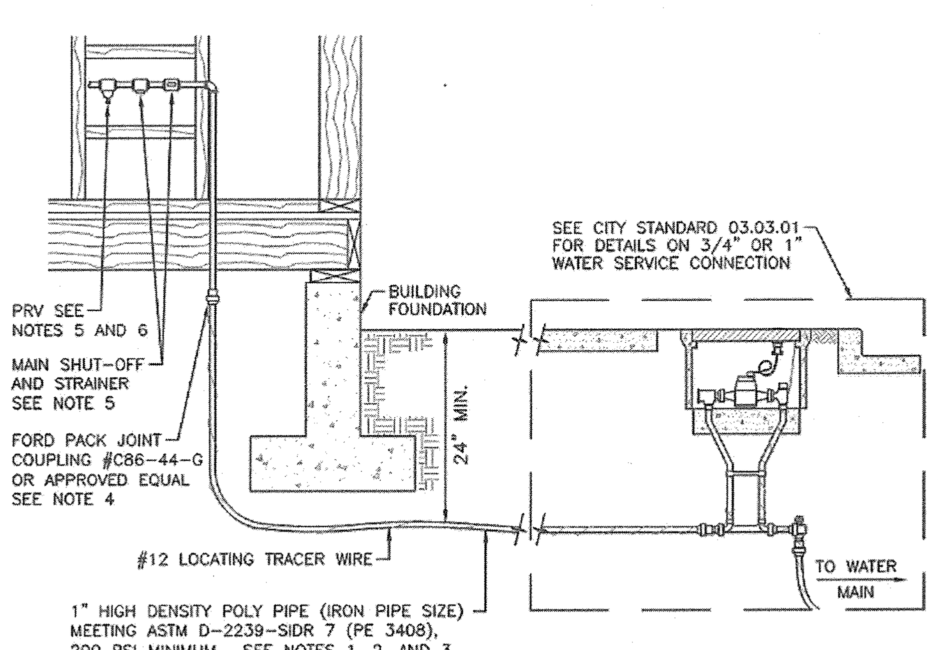

NOTES:

1. SERVICE LINE MAY BE 200 PSI POLY PIPE IN UNCONTAMINATED SOILS. IN SOILS THAT MAY CONTAIN HYDROCARBONS USE 1" "K" COPPER PIPE.
2. PIPE TO BE BEDDED WITH MATERIAL FREE OF ROCKS.
3. POLY PIPE SHOULD BE PLACED IN THE TRENCH IN A SNAKELIKE FASHION (NOT STRAIGHT WITHOUT SLACK). THIS WILL ACCOMMODATE GROUND MOVEMENT AND KEEP PRESSURE OFF THE FITTINGS.
4. PLASTIC WATER SERVICE PIPING MAY TERMINATE WITHIN A BUILDING, PROVIDED THE CONNECTION TO THE POTABLE WATER DISTRIBUTION SYSTEM SHALL BE ACCESSIBLE. SEE THE CURRENT UNIFORM PLUMBING CODE FOR MORE INFORMATION.
5. THE MAIN SHUT-OFF VALVE, PRESSURE REDUCING VALVE, AND STRAINER SHALL BE LOCATED INSIDE THE BUILDING IN AN ACCESSIBLE LOCATION. THEY SHOULD BE LOCATED BEFORE ANY BRANCH CONNECTIONS, AND PROTECTED FROM FREEZING. THE MAIN SHUT-OFF VALVE SHALL BE BRASS.
6. ALL PROPERTIES WITH WATER SERVICE CONNECTIONS LOCATED SOUTH OF 15TH AVE SE AND SOUTH OF 15TH AVE SW SHALL HAVE AN APPROVED PRIVATELY OWNED AND PRIVATELY MAINTAINED PRESSURE REDUCING VALVE (PRV) LOCATED ON THEIR WATER SERVICE LINE.
7. ALL PROPERTIES WITH IRRIGATION BRANCH CONNECTIONS LOCATED SOUTH OF 15TH AVE SE AND SOUTH OF 15TH AVE SW SHOULD HAVE AN APPROVED PRIVATELY OWNED AND PRIVATELY MAINTAINED PRESSURE REDUCING VALVE (PRV) LOCATED ON THEIR IRRIGATION BRANCH LINE.
8. ALL INSTALLATIONS WITHIN TWO (2) FEET OF THE BUILDING SHALL COMPLY WITH THE CURRENT UNIFORM PLUMBING CODE.

CITY OF PUYALLUP
DEVELOPMENT ENGINEERING and PUBLIC WORKS DEPARTMENTS

PRIVATE WATER SERVICE LINES

DRAWN BY	CHECKED BY	APPROVED BY	REVISED BY	CITY STANDARD
BRIAN JOHNSON	LINDA LIAN	COLLEEN HARRIS	XXXX	03.03.04
FILE NAME: F:\DWG\COMMON\STDS\CITY\2009\03_WTR\03.03.04		DATE APPROVED: 10/13/2009	DATE REVISED: XX/XX/XX	SCALE: NTS

D1 PRIVATE WATER SERVICE LINES
SCALE: N.T.S.

APPROVED
BY Colleen Harris
CITY OF PUYALLUP ENGINEERING SERVICES
DATE 5.2.16

NOTE:
THIS APPROVAL IS VOID AFTER 1 YEAR FROM APPROVAL DATE.

THE CITY WILL NOT BE RESPONSIBLE FOR ERRORS AND/OR OMISSIONS ON THESE PLANS.

FIELD CONDITIONS MAY DICTATE CHANGES TO THESE PLANS AS DETERMINED BY THE ENGINEERING SERVICES MANAGER.

REVISIONS: 04-28-2016 PERMIT

APPROVALS: DESIGNED S.H. | DRAWN J.B. | CHECKED R.H. | DATE 04-06-2016 | SCALE AS NOTED

SEAL: RICHARD C. HAND, STATE OF WASHINGTON, 26780, REGISTERED PROFESSIONAL ENGINEER, 04/28/16

PREPARED BY
SITTS & HILL ENGINEERS, INC.
CIVIL • STRUCTURAL • SURVEYING
4815 CENTER STREET | TACOMA, WA. 98409
PHONE: (253) 474-9449 | FAX: (253) 474-0153
http://www.sitts-hill-engineers.com/

PREPARED FOR
PUYALLUP SCHOOL DISTRICT NO. 3
323 12TH STREET N.W.
PUYALLUP, WASHINGTON 98371

PROJECT
TRANSPORTATION AND DRIVER TRAINING MODULAR BUILDING
PUYALLUP, WASHINGTON

SHEET TITLE
WATER UTILITY NOTES AND DETAILS

SHEET NO. C3.2
11 OF 11
PROJECT NO. 16785.50

P:\16700\16785\Drawings\16785.50 Driver Training Portable Project\16785.5 - c3.2.dwg last edited: 04/28/16 3:51pm by: watkinsj