City of Puyallup
Development & Permitting Services
ISSUED PERMIT

Building	Planning
Engineering	Public Works
Fire	Traffic

Y.J INC. SIGN ENGINEER

August 25, 2023

City of Puyallup
Building
ACCEPTED

JMontgomery
09/14/2023
6:51:38 AM

FULL SIZED LEDGIBLE COLOR PLANS ARE REQUIRED TO BE PROVIDE BY THE PERMITTEE ON SITE FOR ALL INSPECTIONS

Structural Calculations

Prepared For:
Tacoma Sign Company
915 26th Ave. NW Ste. C-2
Gig Harbor, WA 98335

Project:

JTS_62523
Salud! Bar & Grill- Patio Cover
3811 9th St.
Puyallup, WA

Prepared By:

YJ Inc.
P.O. Box 802050
Santa Clarita, CA 91380

TONY ISAAC JACOB
STATE OF WASHINGTON
52470
REGISTERED
PROFESSIONAL ENGINEER
08/25/2023

Total 29 - pages including cover

PRSG20230449

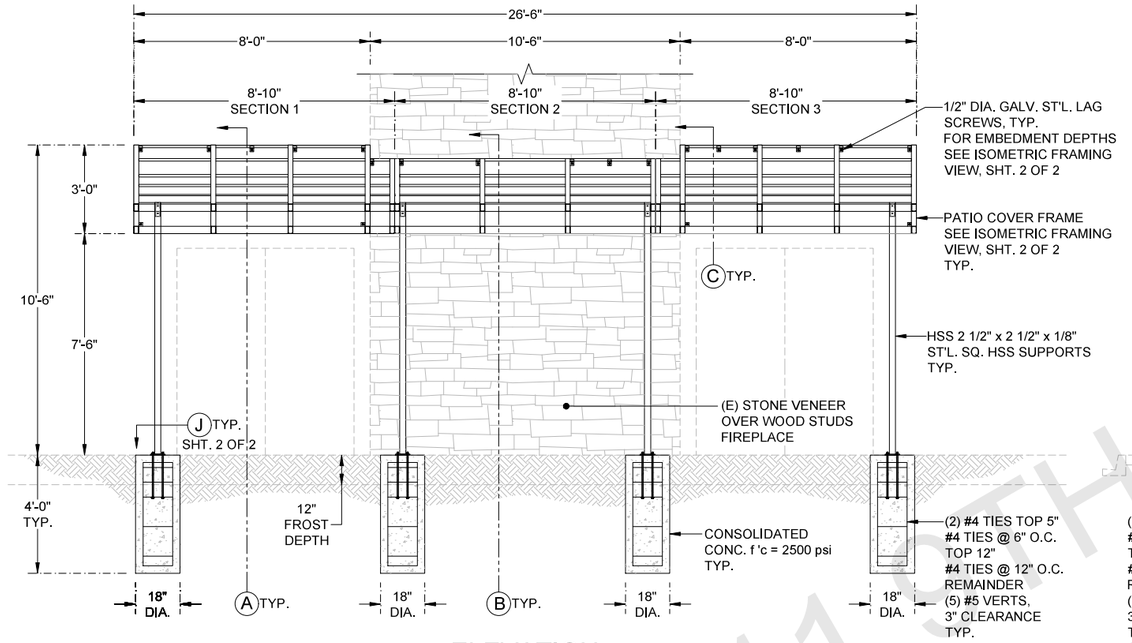

ELEVATION
N.T.S.

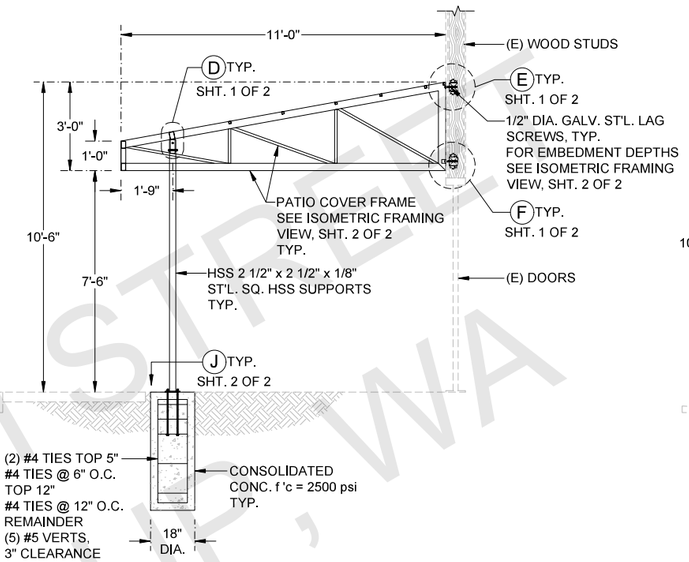

A SECTION
N.T.S.

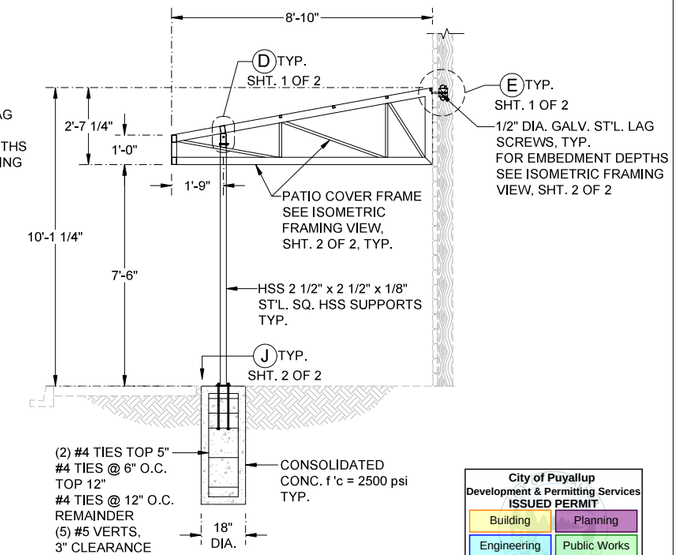

B SECTION
N.T.S.

City of Puyallup
Development & Permitting Services
ISSUED PERMIT
Building | Planning
Engineering | Public Works
Fire | Traffic

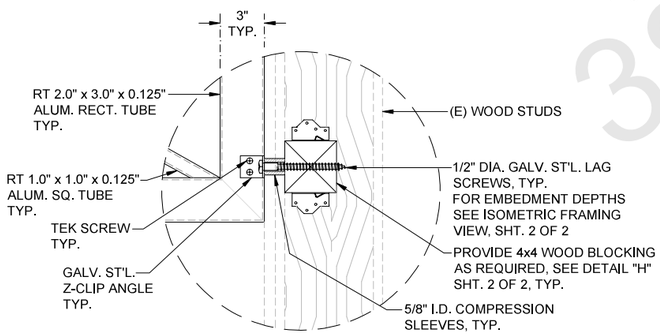

F CONNECTION DETAIL
(4 PLACES) N.T.S.

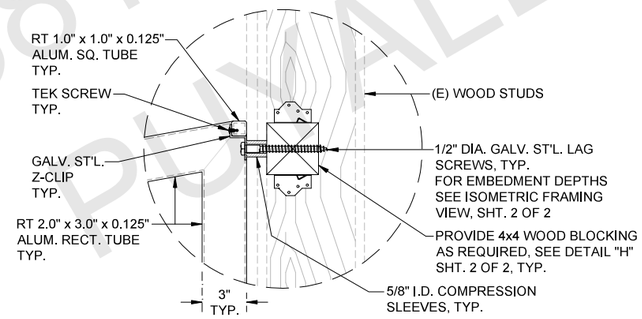

E CONNECTION DETAIL
(15 PLACES) N.T.S.

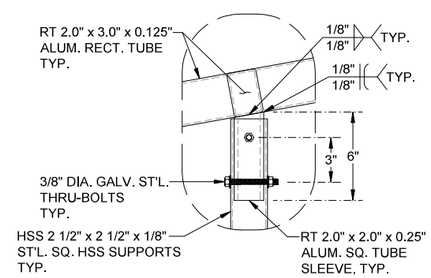

D CONNECTION DETAIL
(4 PLACES) N.T.S.

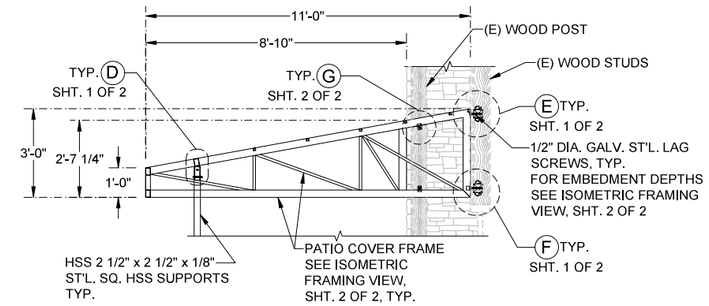

C SECTION
N.T.S.

NOTES :

GENERAL :
- SIGN DESIGN IS BASED ON ADEQUATE EXISTING SUPPORT ELEMENTS.
- PROVIDE ISOLATION OF DISSIMILAR MATERIALS.
- COAT ALUMINUM IN CONTACT WITH CONCRETE WITH ZINC RICH PAINT.
- THERE IS NO PROTECTION ZONE AS DEFINED IN AISC 341-16.
- PROVIDE FULLY WELDED END CAPS AT EXPOSED OPEN ENDS OF STEEL / ALUM. TUBES, MATCH THICKNESS LIKE FOR LIKE.
- SLOPE TOP OF EXPOSED FOOTING AWAY FROM DIRECT BURIAL POSTS
- ALL EXPOSED STEEL TO BE PRIMED & PAINTED (POWDER COAT AS AN OPTION) OR ALTERNATIVELY USE GALVANIZED STEEL.

ANCHORS :
- BRAND NAME APPROVED POST INSTALLED ANCHORS SPECIFIED ON PLANS MAY BE SUBSTITUTED BY APPROVED EQUAL.

STEEL :
DESIGN AND FABRICATION ACCORDING TO 2018 WSBC
- PLATE, ANGLE, CHANNEL TEE: ASTM A36
- WIDE FLANGE: ASTM A992
- ROUND PIPE: ASTM A53 GRADE B OR EQUIVALENT.
- HSS ROUND, SQUARE, AND RECTANGULAR TUBE: ASTM A500 GRADE B OR EQUIVALENT.
- ALL ANCHORS BOLTS SHOULD BE: ASTM F1554
- ALL STEEL MACHINED BOLTS SHOULD BE: ASTM A307 OR ASTM A449
- ALL STAINLESS STEEL MACHINED BOLTS SHOULD BE: ASTM A276
- ALL BOLTS TO BE ZINC COATED: ASTM B633
- DEFORMED REINFORCING REBAR: ASTM A615 GRADE 60.

ALUMINUM :
DESIGN AND FABRICATION ACCORDING TO 2015 ALUM. DESIGN MANUAL
PLATES, ANGLES, CHANNELS, TEE, AND SQUARE TUBING: ALUMINUM
- ALLOY 6061 - T6 WITH 0.098 LBS PER CUBIC INCH.

WELDING :
STEEL
DESIGN AND FABRICATION ACCORDING TO AWS D1.1. / D1.3
- AWS CERTIFICATION REQUIRED FOR ALL STRUCTURAL WELDERS.
- E70 XX ELECTRODE FOR SMAW PROCESS.
- E70S XX ELECTRODE FOR GMAW PROCESS.
- ER7 XX ELECTRODE FOR GTAW PROCESS.
- E70T XX ELECTRODE FOR FCAW PROCESS.

ALL WELDS SHALL BE MADE WITH A FILLER METAL THAT CAN PRODUCE WELDS THAT HAVE A MINIMUM CHARPY V-NOTCH TOUGHNESS OF 20FT-LB AT ZERO 0° AS DETERMINED BY THE APPROPRIATE AWS A5 CLASSIFICATION TEST METHOD OR MFG'S. CERTIFICATION.

ALUMINUM
DESIGN AND FABRICATION ACCORDING TO AWS D1.2. ALL WELDING IN ACCORDANCE WITH THE LATEST EDITION OF THE AWS A.5.10.
FILLER ALLOYS PER TABLES M.9.1 & M.9.2 OF 2015 ALUMINUM DESIGN MANUAL.

CONCRETE :
DESIGN AND CONSTRUCTION ACCORDING TO ACI 318-14
- COMPRESSIVE STRENGTH AT 28 DAYS, f 'c= 2500 PSI MINIMUM.
- CEMENT TYPE II OR IV. W/C RATIO 0.45 BY WEIGHT FOR PIER AND CAISSON
- FOOTINGS CONCRETE MUST BE POURED AGAINST UNDISTURBED EARTH.
- MAINTAIN A MINIMUM 3" CONCRETE COVER OVER ALL EMBEDDED STEEL.

SOIL:
LATERAL SOIL BEARING PER IBC CLASS 4 TABLE 1806.2 (150 PSF/FT). MODIFIED PER SECTION 1806.3.4.

www.yjinc.com
P.O. BOX 802050
SANTA CLARITA, CA. 91380
TEL. (661)259-0700 FAX. (661)259-0900

SHEET TITLE: PRSG20230449

SALUD! BAR & GRILL PATIO COVER

DRN BY: K.S.P.	DATE LAST REVISED: Aug 25, 2023	REV. NO.	REV. DATE	REVISED BY	PROJECT JOB # : JTS_62523_Salud Bar & Grill_Patio Cover_9th Street_Puyallup WA.dwg
CHK BY: T.J.	PROJ. START DATE: Mar 29, 2023	1	04/13/2023	K.S.P.	PROJECT LOCATION : SALUD! BAR & GRILL, 3811 9TH STREET, PUYALLUP, WA
REV BY: T.J.	SCALE: AS SHOWN	2	–/–/–	—	SHEET # 1 OF 2
PLOTTED BY: Jessica Ocampo ON 8/25/2023 8:56:31 AM		3	–/–/–	—	

City of Puyallup Development & Permitting Services ISSUED PERMIT	
Building	Planning
Engineering	Public Works
Fire	Traffic

ANCHOR LEGEND

- 1/2" DIA. x 2" MIN. EFF. EMBED. GALV. ST'L. LAG SCREWS TYP.
- 1/2" DIA. x 3" MIN. EFF. EMBED. GALV. ST'L. LAG SCREWS TYP.

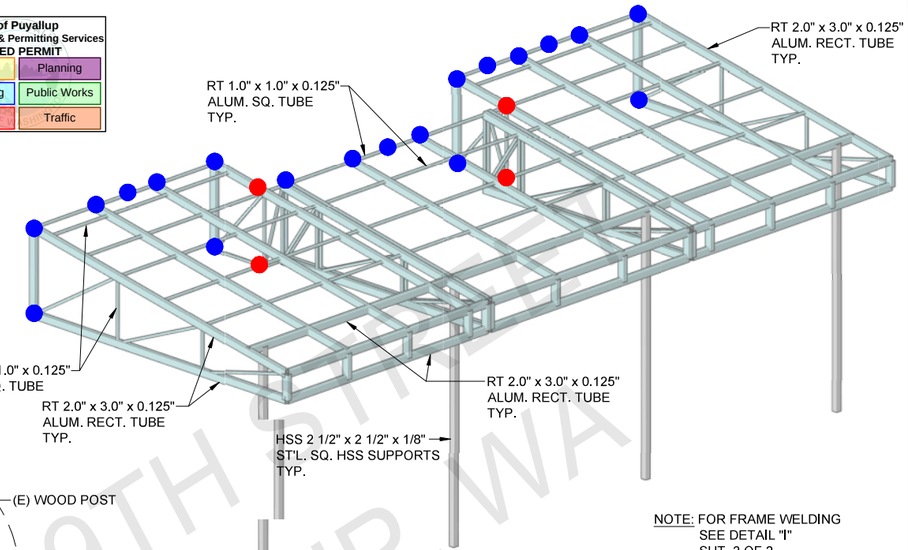

NOTE: FOR FRAME WELDING SEE DETAIL "I" SHT. 2 OF 2

ISOMETRIC FRAMING VIEW

N.T.S.

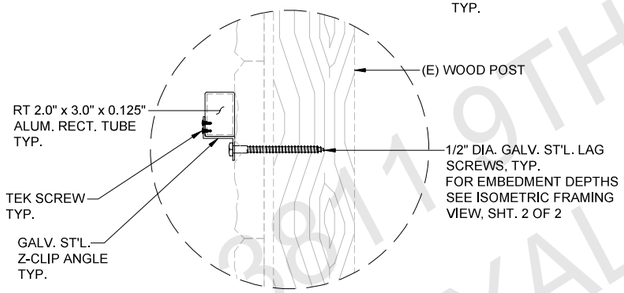

G CONNECTION DETAIL

(4 PLACES) N.T.S.

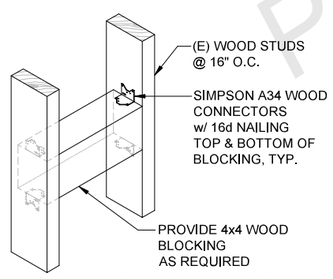

H WOOD BLOCKING DETAIL

N.T.S.

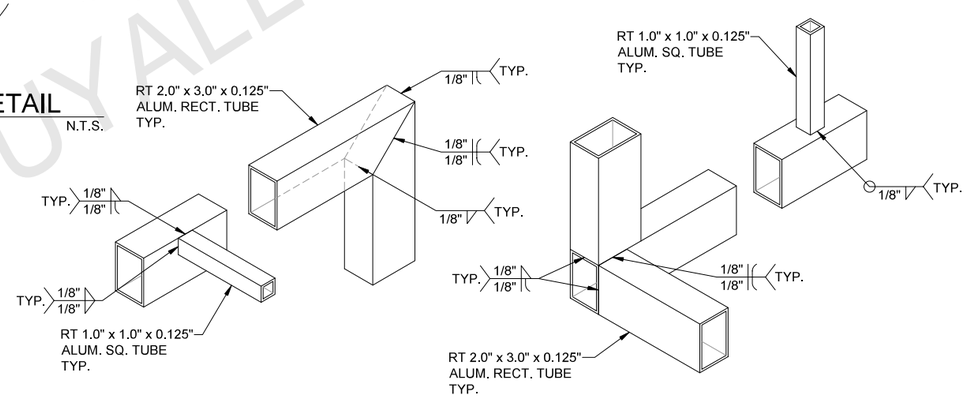

I WELDING DETAIL

N.T.S.

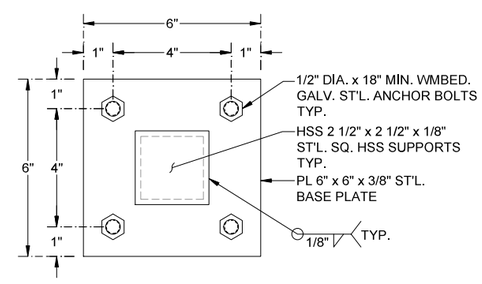

J ST'L. BASE PLATE

t = 3/8" (4 PLACES) N.T.S.

Sign Design Based On 2018 WSBC

Job #	JTS_62523			
Project	Saludl Bar & Grill - Patio Cover			
Job Location	3811 9th St.			
	Puyallup, WA			
INPUT DATA:	**Roof C&C Wind pressure**			
Exposure category (B, C or D)		=	B	
Risk Category		=	II	
Ultimate Design Windspeed	V_{ULT}	=	100	MPH
Topographic factor	K_{zt}	=	1	Flat
Mean Roof Height	h	=	10.50	FT
Canopy Width	W	=	26.50	FT
Length	L	=	11.00	FT
Roof Area	A	=	291.50	FT^2
Roof Angle	Θ	=	10	DEG.
ANALYSIS				
Velocity pressure				
$q_z = 0.00256\ K_z K_{zt} K_d V^2 K_e$		=	15.23	PSF
where:				
q_z = velocity pressure at height h. (Eq. 26.10-1 page. 268)				
K_z = velocity pressure exposure coefficient		=	0.70	
evaluated at height above gRnd. level. h (Tab. 26.10-1, page 268)				
K_d = wind directionality factor. (Tab. 26.6-1, page 266)		=	0.85	
K_e = ground elevation factor, see (Tab. 26.9-1, page 268)		=	1.00	
Design Wind Pressures.	The net design wind pressure for component & cladding elements of **open** buildings of all heights with monoslope, pitched & troughed roofs shall be determined by the ff. equation :			
$p = q_z G C_N$		=	21	PSF
where:	p = positive pressure (downforce), Zone 2, given unobstructed windflow			
	G = gust-effect factor from (sec. 26.9)	=	0.85	
	C_N = net pressure coefficient given in: Fig. 30.8-1 for monoslope roof	=	1.66	
Roof Live Load:		=	10	PSF

Snow Load :

GRnd. Snow Load, p_g = 20 PSF

Flat Roof Snow Load, $p_f = 0.7\ C_s\ C_t\ I_s\ p_g$

Where: C_s = 0.90 C_t = 1.20 I_s = 1.00

p_f = 15 psf

Roof Slope θ = 10 C_s = 1.00

p_s = 15 PSF

Frame Design *(See attached Risa calcs)*

ST'L. SQ. HSS USE A500 GR. B

HSS	2 1/2" x	2 1/2" x	1/8"

ALUM. SQ. TUBE USE 6061-T6 W

RT	1.0" x	1.0" x	0.125"

ALUM. RECT. TUBE USE 6061-T6 W

RT	2.0" x	3.0" x	0.125"

Footing Design (Nonconstrained)

Diameter = 1.50 FT

EMBED. = 4.00 FT

Concrete Unit Weight = 145.00 PCF

Check Uplift

Min. Support Tesnion Reaction, LC15, Node N87, Y = - 0.203 KIPS

Concrete Pier Weight = 1025 LB > 406 LB (OK)

Check Vertical Bearing

Max. Support Axial Reaction, LC8, Node N87, Y = 1.296 KIPS

Applied Vertical Bearing preessure 1313 PSF < 2000 PSF (OK)

18"	DIA.	DEPTH =	4' - 0"

Anchor to Center Wall Design

Max. Support Shear Reaction, LC8, Node N31, Y = 0.452 KIPS

Shear, Z = - 0.012 KIPS

Resultant Shear = 0.452 KIPS

Tension, X = 0.014 KIPS

GALV.ST'L. LAG SCREW

Tension Req'd. USE A307

T = 14 | 1/2" DIA., x 3" EFF. MIN. EMBED | T = 817

Shear Req'd.

V = 452 V = 484

Unity = (14 / 817) + (452 / 484) = 0.95 < 1 (OK)

Anchor to Wood Stud Design

Max. Support Shear Reaction, LC8, Node N7, Y = 0.184 KIPS

Shear, Z = - 0.005 KIPS

Resultant Shear = 0.184 KIPS

Tension, X = 0.012 KIPS

GALV.ST'L. LAG SCREW

Pull-out Req'd. USE A307

P = 12 | 1/2" DIA., x 2" EFF. MIN. EMBED | P = 575

Shear Req'd.

V = 184 V = 322

Unity (per NDS Eqn.12.4-1): Total Force = 184 < Total Allowable = 323 (OK!)

Base Plate Anchor Design

GALV. ST'L. ANCHOR BOLT

Tension Req'd. USE F 1554 GR. 36

T = 51 | 1/2" DIA., x 18" MIN. EMBED | T = 4260 (OK)

Base Plate ST'L. PLATE

Thickness Req'd. USE A36

t = 0.07 | PL 6" x 6" x 3/8" | t = 0.38 (OK)

NOTES :

GENERAL :

- SIGN DESIGN IS BASED ON ADEQUATE EXISTING SUPPORT ELEMENTS.
- PROVIDE ISOLATION OF DISSIMILAR MATERIALS.
- COAT ALUMINUM IN CONTACT WITH CONCRETE WITH ZINC RICH PAINT.
- THERE IS NO PROTECTION ZONE AS DEFINED IN AISC 341-16.
- PROVIDE FULLY WELDED END CAPS AT EXPOSED OPEN ENDS OF STEEL / ALUM. TUBES, MATCH THICKNESS LIKE FOR LIKE.
- SLOPE TOP OF EXPOSED FOOTING AWAY FROM DIRECT BURIAL POSTS
- ALL EXPOSED STEEL TO BE PRIMED & PAINTED (POWDER COAT AS AN OPTION) OR ALTERNATIVELY USE GALVANIZED STEEL.

ANCHORS :

- BRAND NAME APPROVED POST INSTALLED ANCHORS SPECIFIED ON PLANS MAY BE SUBSTITUTED BY APPROVED EQUAL.

STEEL :

DESIGN AND FABRICATION ACCORDING TO 2018 WSBC

- PLATE, ANGLE, CHANNEL TEE: ASTM A36
- WIDE FLANGE: ASTM A992
- ROUND PIPE: ASTM A53 GRADE B OR EQUIVALENT.
- HSS ROUND, SQUARE, AND RECTANGULAR TUBE: ASTM A500 GRADE B OR EQUIVALENT.
- ALL ANCHORS BOLTS SHOULD BE: ASTM F1554
- ALL STEEL MACHINED BOLTS SHOULD BE: ASTM A307 OR ASTM A449
- ALL STAINLESS STEEL MACHINED BOLTS SHOULD BE: ASTM A276
- ALL BOLTS TO BE ZINC COATED: ASTM B633
- DEFORMED REINFORCING REBAR: ASTM A615 GRADE 60.

ALUMINUM :

DESIGN AND FABRICATION ACCORDING TO 2015 ALUM. DESIGN MANUAL

PLATES, ANGLES, CHANNELS, TEE, AND SQUARE TUBING: ALUMINUM

- ALLOY 6061 - T6 WITH 0.098 LBS PER CUBIC INCH.

WELDING :

STEEL

DESIGN AND FABRICATION ACCORDING TO AWS D1.1. / D1.3

- AWS CERTIFICATION REQUIRED FOR ALL STRUCTURAL WELDERS.
- E70 XX ELECTRODE FOR SMAW PROCESS.
- E70S XX ELECTRODE FOR GMAW PROCESS.
- ER7 XX ELECTRODE FOR GTAW PROCESS.
- E70T XX ELECTRODE FOR FCAW PROCESS.

ALL WELDS SHALL BE MADE WITH A FILLER METAL THAT CAN PRODUCE WELDS THAT HAVE A MINIMUM CHARPY V-NOTCH TOUGHNESS OF 20FT-LB AT ZERO 0° AS DETERMINED BY THE APPROPRIATE AWS A5 CLASSIFICATION TEST METHOD OR MFG'S. CERTIFICATION.

ALUMINUM

DESIGN AND FABRICATION ACCORDING TO AWS D1.2. ALL WELDING IN ACCORDANCE WITH THE LATEST EDITION OF THE AWS A.5.10. FILLER ALLOYS PER TABLES M.9.1 & M.9.2 OF 2015 ALUMINUM DESIGN MANUAL.

CONCRETE :

DESIGN AND CONSTRUCTION ACCORDING TO ACI 318-14

- COMPRESSIVE STRENGTH AT 28 DAYS, f 'c= 2500 PSI MINIMUM.
- CEMENT TYPE II OR IV. W/C RATIO 0.45 BY WEIGHT FOR PIER AND CAISSON
- FOOTINGS CONCRETE MUST BE POURED AGAINST UNDISTURBED EARTH.
- MAINTAIN A MINIMUM 3" CONCRETE COVER OVER ALL EMBEDDED STEEL.

SOIL:

LATERAL SOIL BEARING PER IBC CLASS 4 TABLE 1806.2 (150 PSF/FT). MODIFIED PER SECTION 1806.3.4.

TONY ISAAC JACOB — STATE OF WASHINGTON — 52470 — REGISTERED PROFESSIONAL ENGINEER

08/25/2023

www.yjinc.com
P.O. BOX 802050
SANTA CLARITA, CA. 91380
TEL. (661)259-0700 FAX. (661)259-0900

SHEET TITLE: PRSG20230449

SALUD! BAR & GRILL PATIO COVER

DRN BY: K.S.P.	DATE LAST REVISED: Aug 25, 2023	REV. NO.	REV. DATE	REVISED BY	PROJECT JOB # : JTS_62523_Salud Bar & Grill_Patio Cover_9th Street_Puyallup WA.dwg
CHK BY: T.J.	PROJ. START DATE: Mar 29, 2023	1	04/13/2023	K.S.P.	PROJECT LOCATION : SALUD! BAR & GRILL, 3811 9TH STREET, PUYALLUP, WA
REV BY: T.J.	SCALE: AS SHOWN	2	–/–/–	—	SHEET # 2 OF 2
PLOTTED BY: Jessica Ocampo ON 8/25/2023 8:56:34 AM		3	–/–/–	—	

City of Puyallup
Development & Permitting Services
ISSUED PERMIT

Building	Planning
Engineering	Public Works
Fire	Traffic

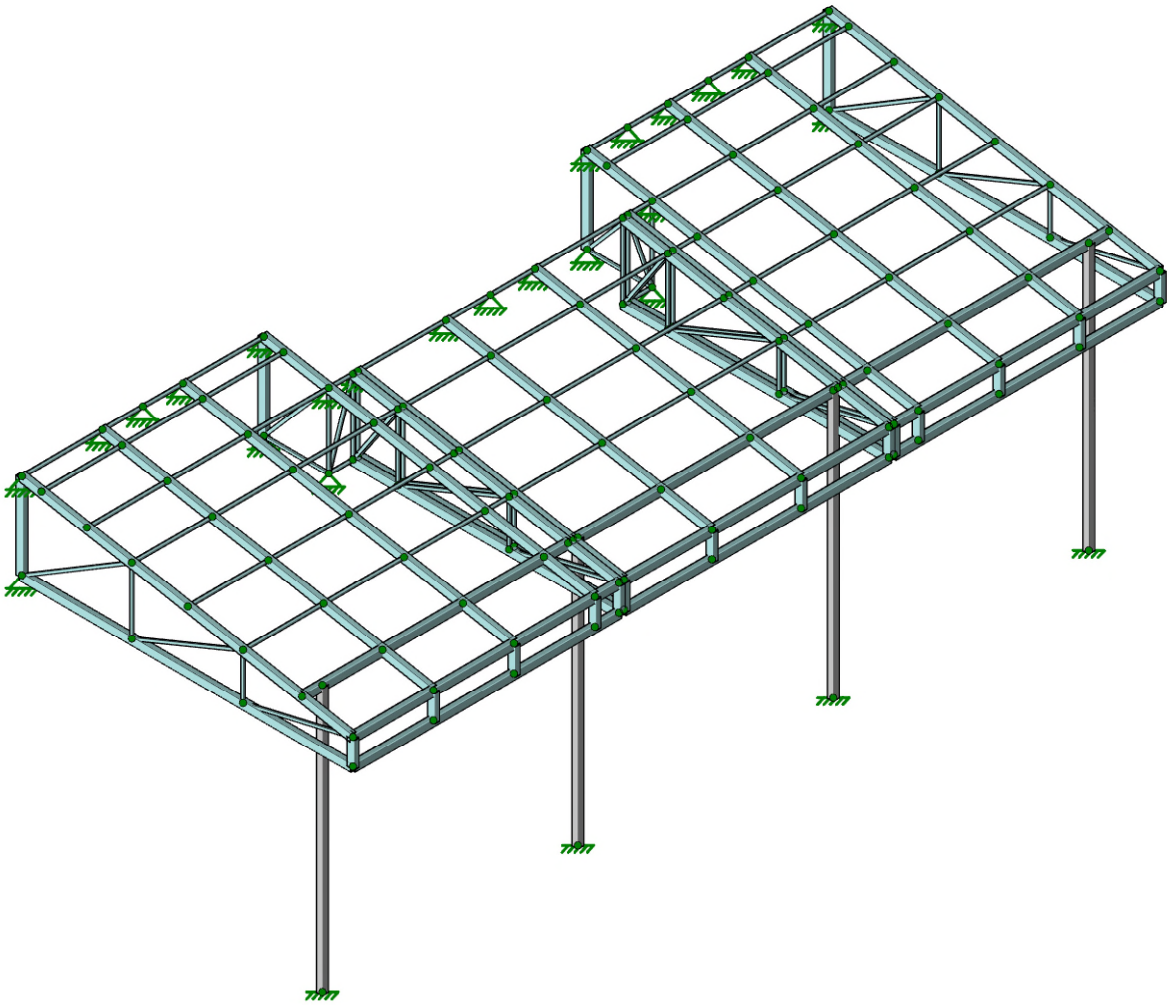

Envelope Only Solution

RISA A NEMETSCHEK COMPANY	YJ INC	Salud! Bar & Grill - Patio Cover	SK-1
	I.I.		Aug 22, 2023 at 01:17 PM
	JTS_62523_R	3-D MODEL	62523_Salud Bar & Grill_Pati…

PRSG20230449

City of Puyallup
Development & Permitting Services
ISSUED PERMIT

Building	Planning
Engineering	Public Works
Fire	Traffic

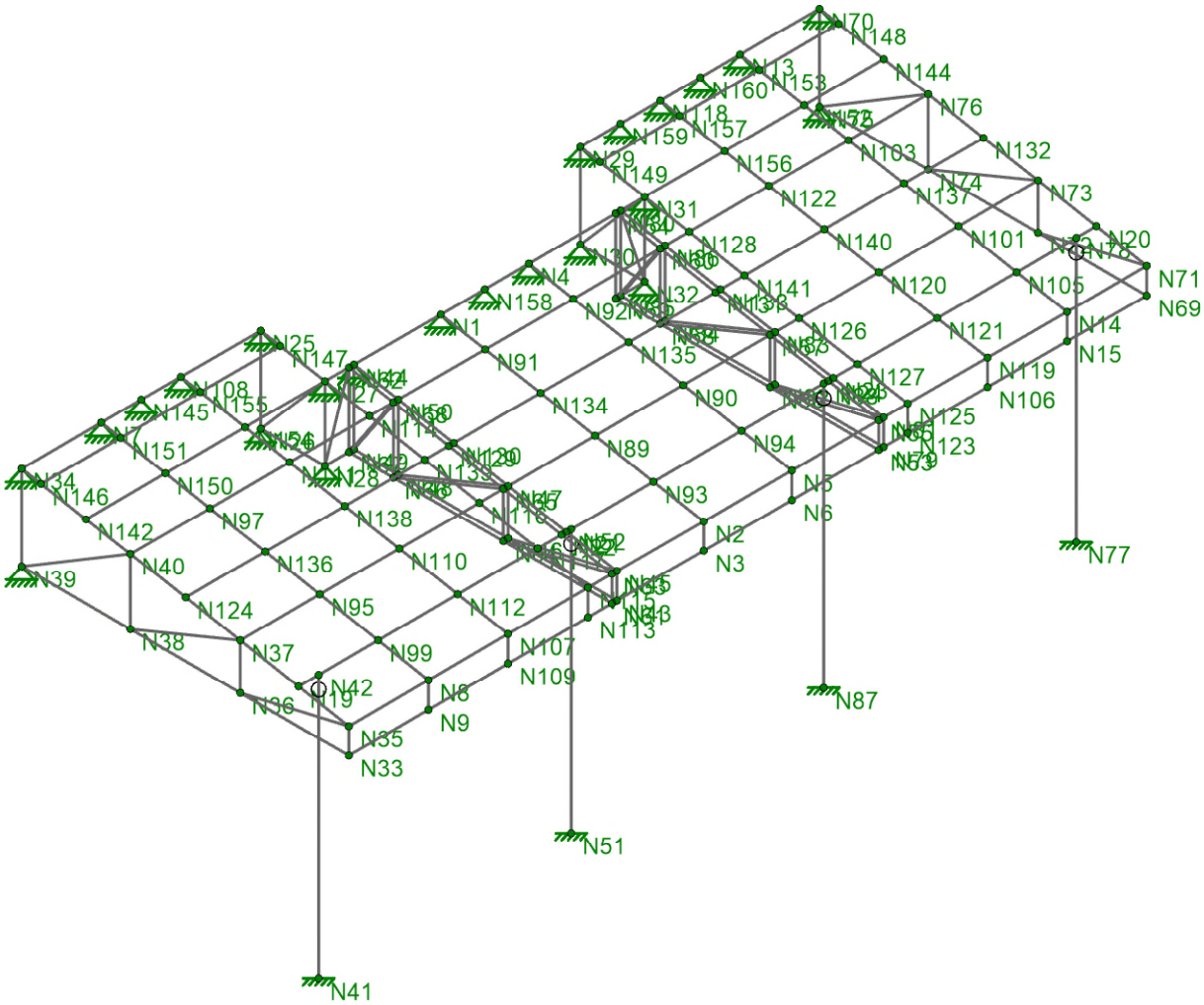

Envelope Only Solution

RISA A NEMETSCHEK COMPANY	YJ INC	Salud! Bar & Grill - Patio Cover	SK-2
	I.I.		Aug 22, 2023 at 01:18 PM
	JTS_62523_R	NODES AND SUPPORTS	62523_Salud Bar & Grill_Pati…

PRSG20230449

City of Puyallup
Development & Permitting Services
ISSUED PERMIT

Building	Planning
Engineering	Public Works
Fire	Traffic

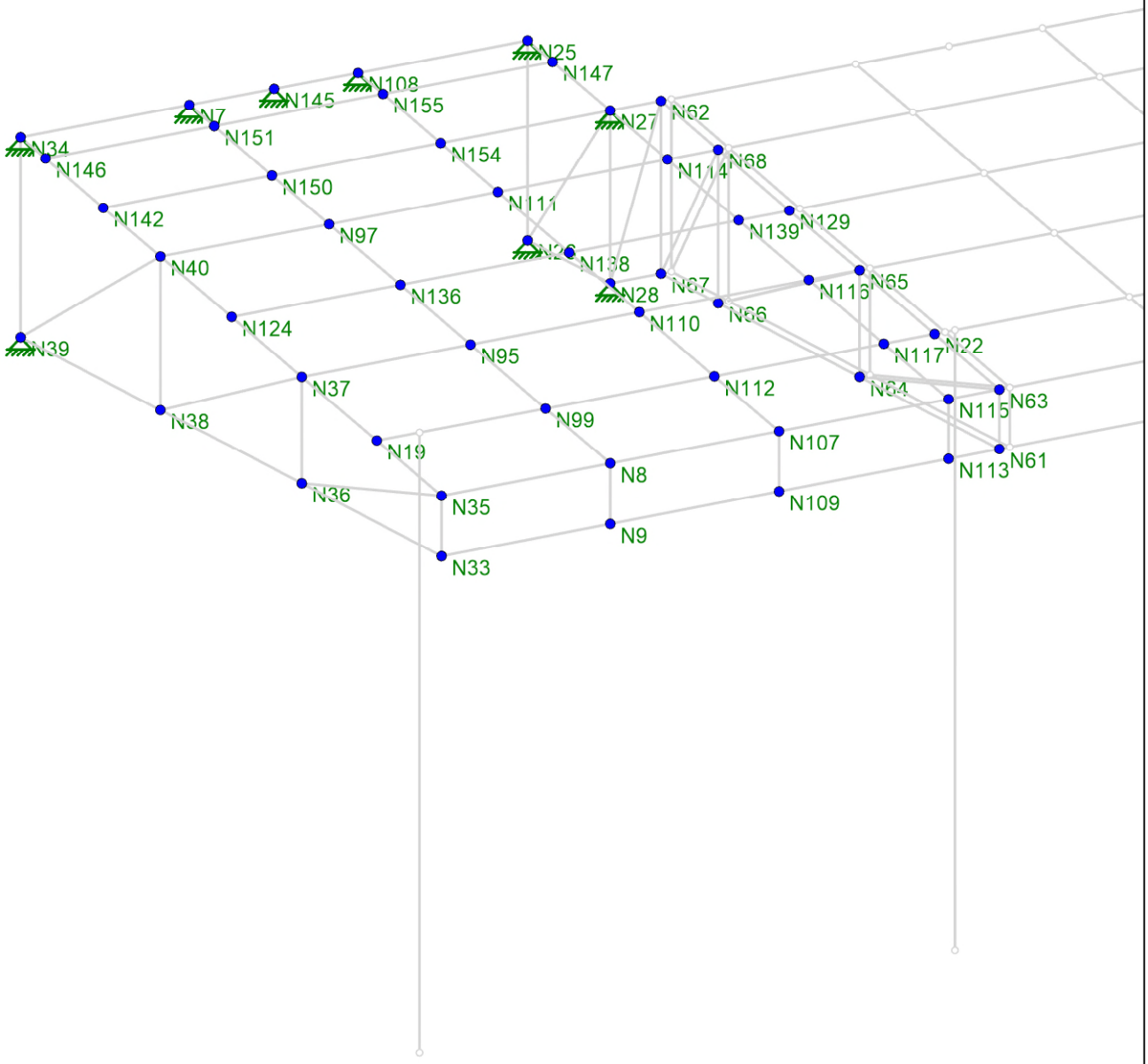

Envelope Only Solution

RISA A NEMETSCHEK COMPANY	YJ INC	Salud! Bar & Grill - Patio Cover	SK-3
	I.I.		Aug 22, 2023 at 01:21 PM
	JTS_62523_R	NODES AND SUPPORTS - SECTION 1	62523_Salud Bar & Grill_Pati…

PRSG20230449

City of Puyallup
Development & Permitting Services
ISSUED PERMIT

Building	Planning
Engineering	Public Works
Fire	Traffic

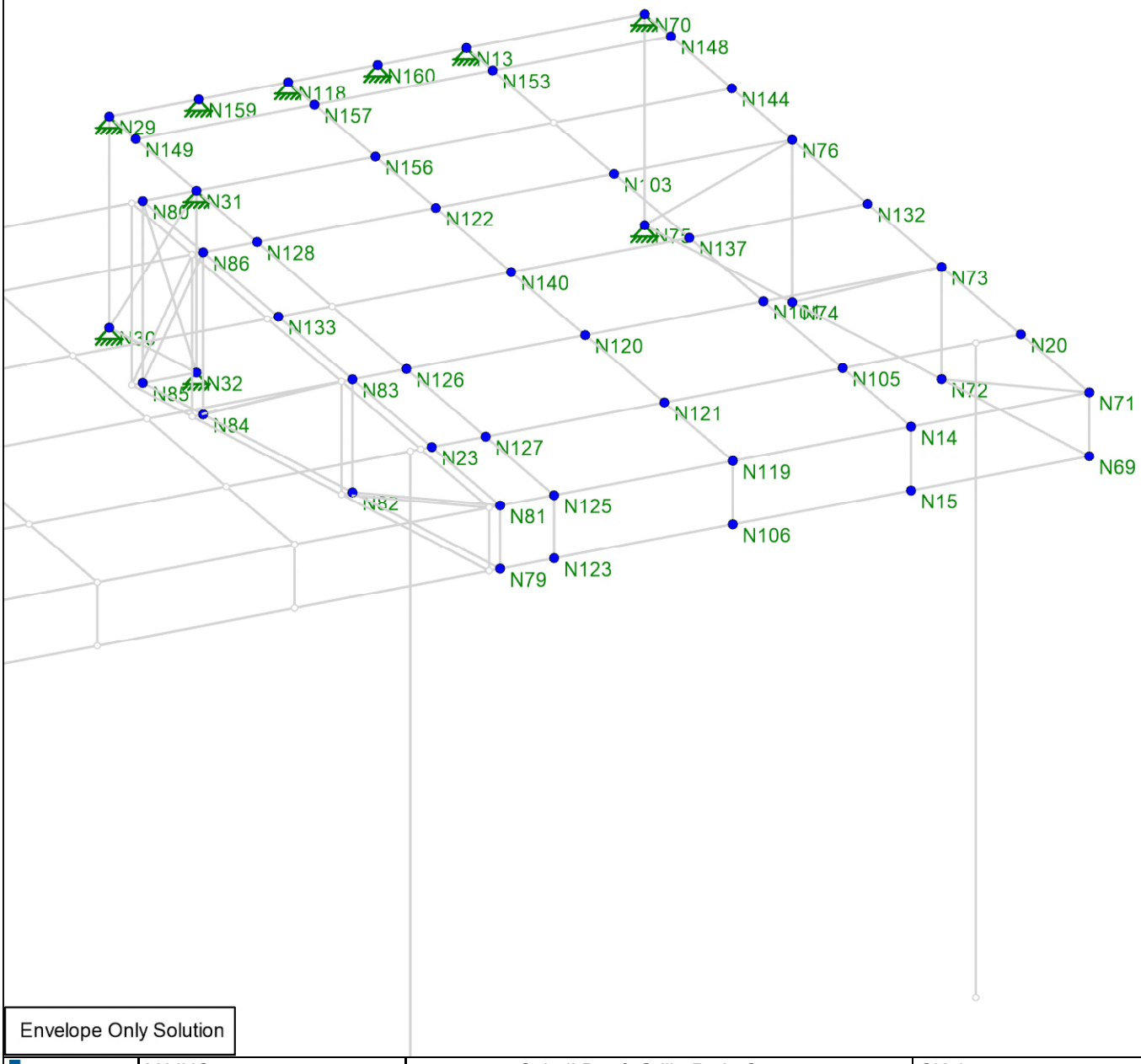

Envelope Only Solution

RISA A NEMETSCHEK COMPANY	YJ INC	Salud! Bar & Grill - Patio Cover	SK-4
	I.I.		Aug 22, 2023 at 01:23 PM
	JTS_62523_R	NODES AND SUPPORTS - SECTION 3	62523_Salud Bar & Grill_Pati…

PRSG20230449

City of Puyallup
Development & Permitting Services
ISSUED PERMIT

Building	Planning
Engineering	Public Works
Fire	Traffic

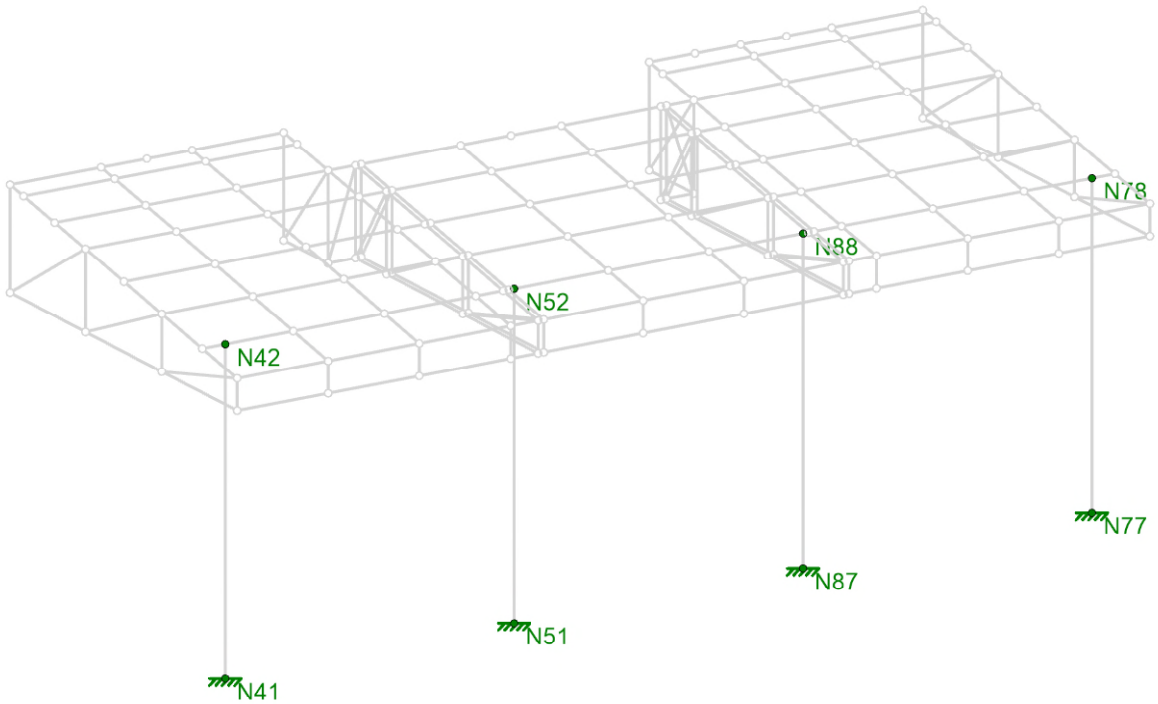

Envelope Only Solution

RISA A NEMETSCHEK COMPANY	YJ INC	Salud! Bar & Grill - Patio Cover	SK-5
	I.I.		Aug 22, 2023 at 01:24 PM
	JTS_62523_R	NODES AND SUPPORTS - SUPPORT POLES	62523_Salud Bar & Grill_Pati…

PRSG20230449

City of Puyallup
Development & Permitting Services
ISSUED PERMIT

Building	Planning
Engineering	Public Works
Fire	Traffic

Member Material Sets
- RIGID
- A500 Gr.B Rect
- 6061-T6 W

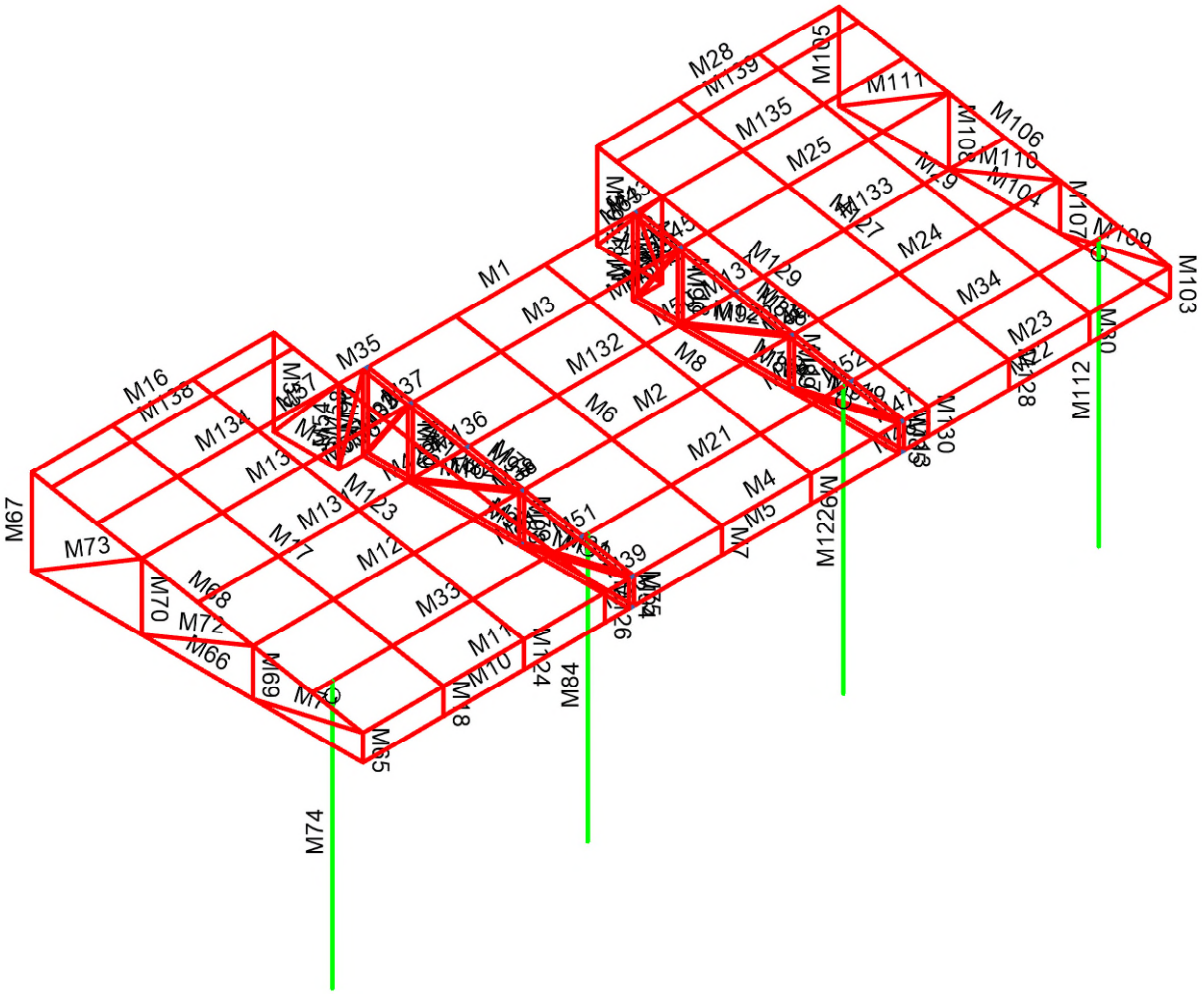

Envelope Only Solution

RISA A NEMETSCHEK COMPANY	YJ INC	Salud! Bar & Grill - Patio Cover	SK-6
	I.I.		Aug 22, 2023 at 01:25 PM
	JTS_62523_R	MEMBER LABELS	62523_Salud Bar & Grill_Pati…

PRSG20230449

City of Puyallup
Development & Permitting Services
ISSUED PERMIT

Building	Planning
Engineering	Public Works
Fire	Traffic

Member Material Sets
- RIGID
- A500 Gr.B Rect
- 6061-T6 W

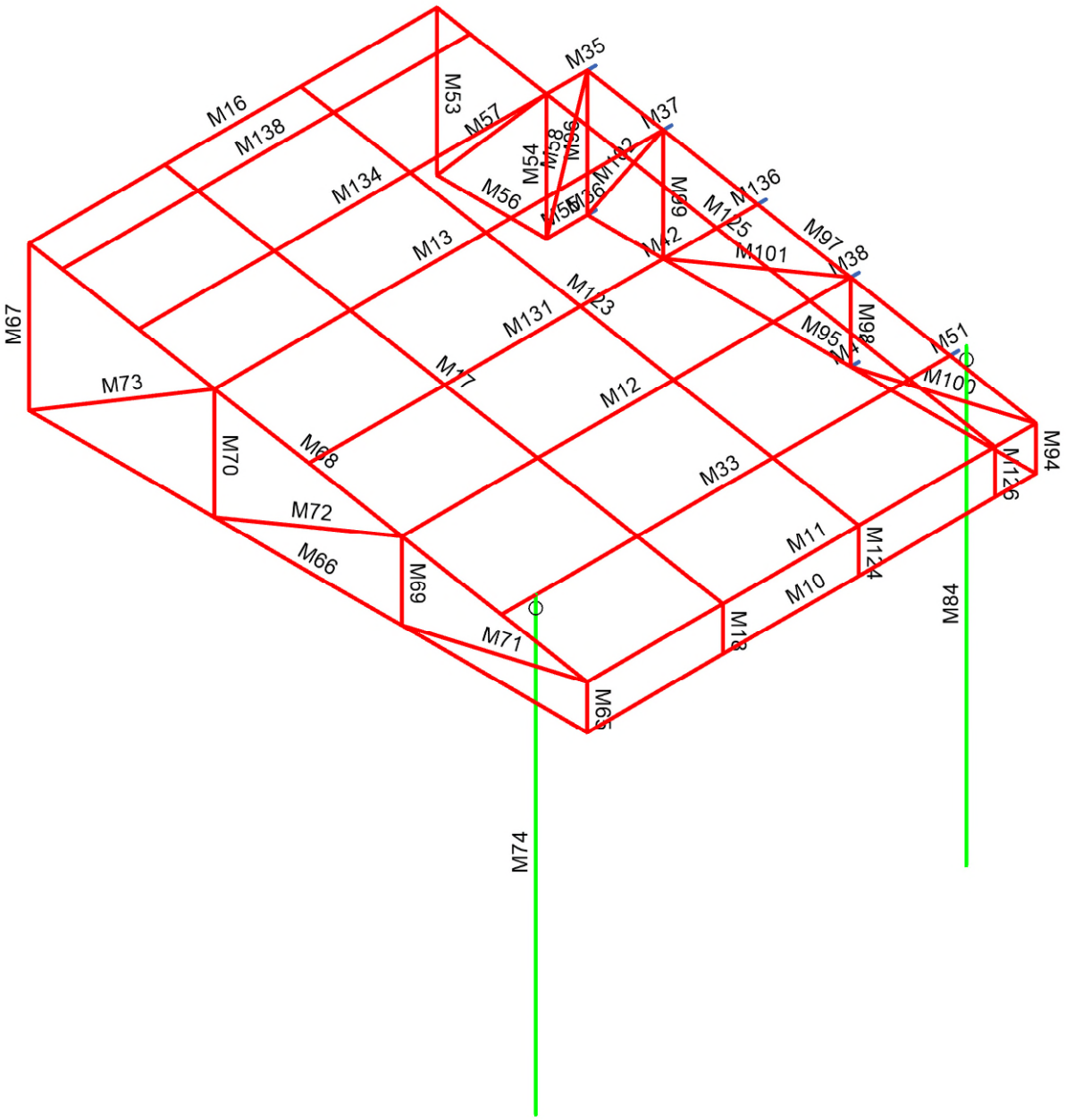

Envelope Only Solution

RISA A NEMETSCHEK COMPANY	YJ INC	Salud! Bar & Grill - Patio Cover	SK-7
	I.I.		Aug 22, 2023 at 01:25 PM
	JTS_62523_R	MEMBER LABELS - SECTION 1	62523_Salud Bar & Grill_Pati…

PRSG20230449

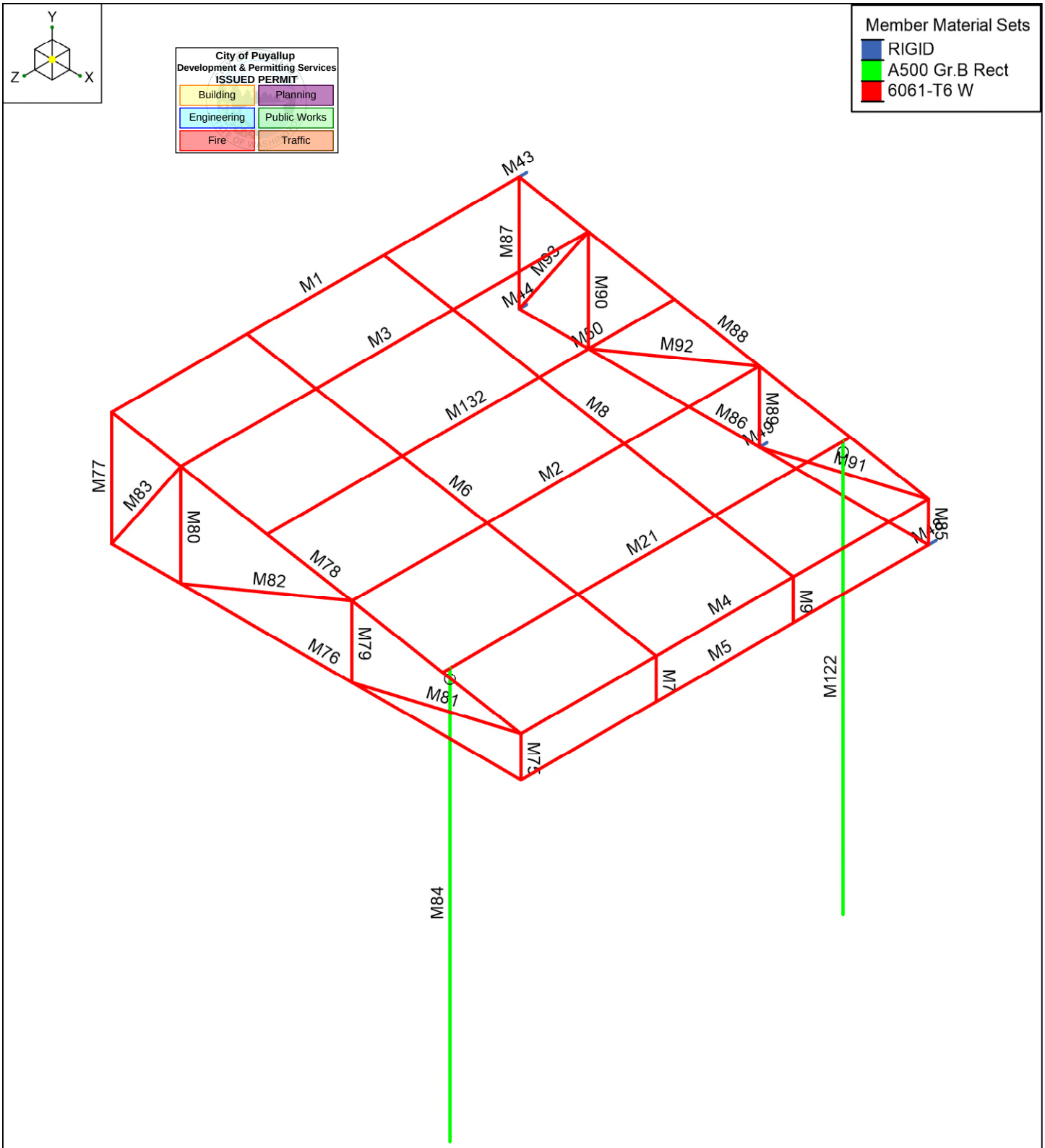

Envelope Only Solution

RISA A NEMETSCHEK COMPANY	YJ INC	Salud! Bar & Grill - Patio Cover	SK-8
	I.I.		Aug 22, 2023 at 01:26 PM
	JTS_62523_R	MEMBER LABELS - SECTION 2	62523_Salud Bar & Grill_Pati…

PRSG20230449

City of Puyallup
Development & Permitting Services
ISSUED PERMIT

Building	Planning
Engineering	Public Works
Fire	Traffic

Member Material Sets
- RIGID
- A500 Gr.B Rect
- 6061-T6 W

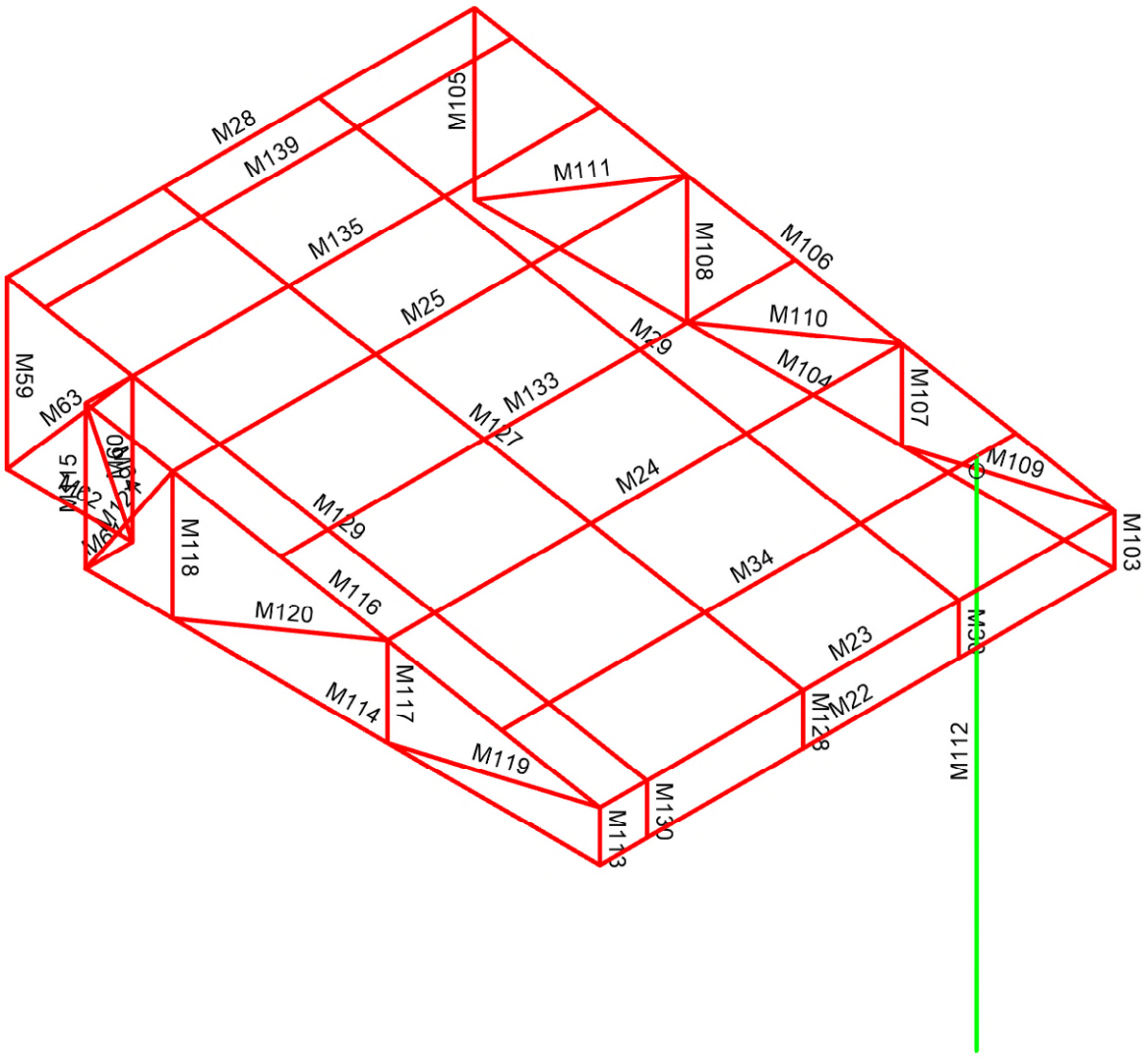

Envelope Only Solution

RISA A NEMETSCHEK COMPANY	YJ INC	Salud! Bar & Grill - Patio Cover	SK-9
	I.I.		Aug 22, 2023 at 01:26 PM
	JTS_62523_R	MEMBER LABELS - SECTION 3	62523_Salud Bar & Grill_Pati…

PRSG20230449

City of Puyallup
Development & Permitting Services
ISSUED PERMIT

Building	Planning
Engineering	Public Works
Fire	Traffic

Section Sets
- HSS2.5X2.5X0.125
- RIGID
- RT1X1X0.125
- RT2X3X0.125

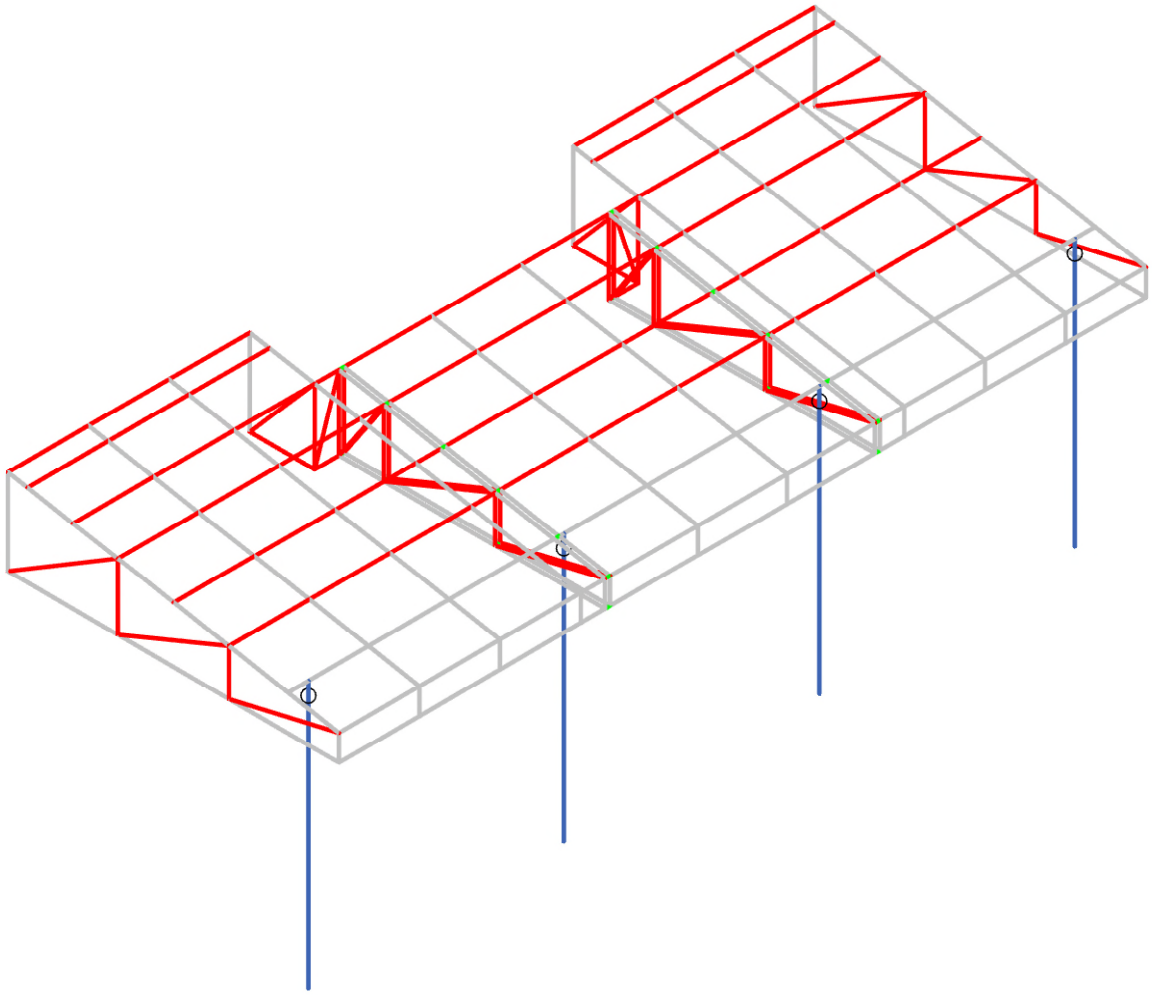

Envelope Only Solution

RISA A NEMETSCHEK COMPANY	YJ INC	Salud! Bar & Grill - Patio Cover	SK-10
	I.I.		Aug 22, 2023 at 01:27 PM
	JTS_62523_R	MEMBER SHAPES	62523_Salud Bar & Grill_Pati…

PRSG20230449

City of Puyallup
Development & Permitting Services
ISSUED PERMIT

Building	Planning
Engineering	Public Works
Fire	Traffic

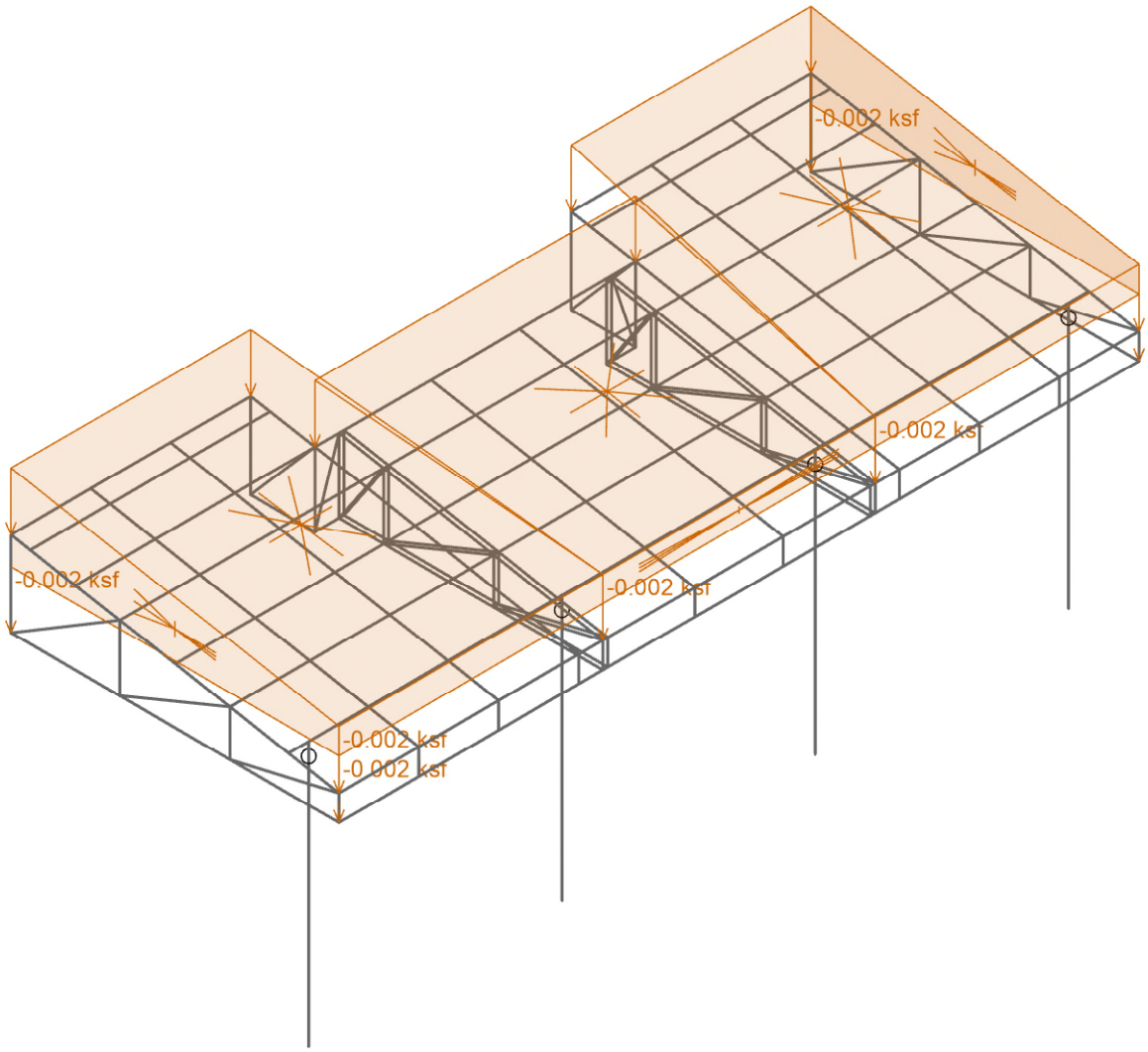

Loads: BLC 2, Cover Load
Envelope Only Solution

RISA A NEMETSCHEK COMPANY	YJ INC	Salud! Bar & Grill - Patio Cover	SK-11
	I.I.		Aug 22, 2023 at 01:27 PM
	JTS_62523_R	COVER DEAD LOAD	62523_Salud Bar & Grill_Pati…

PRSG20230449

City of Puyallup
Development & Permitting Services
ISSUED PERMIT

Building	Planning
Engineering	Public Works
Fire	Traffic

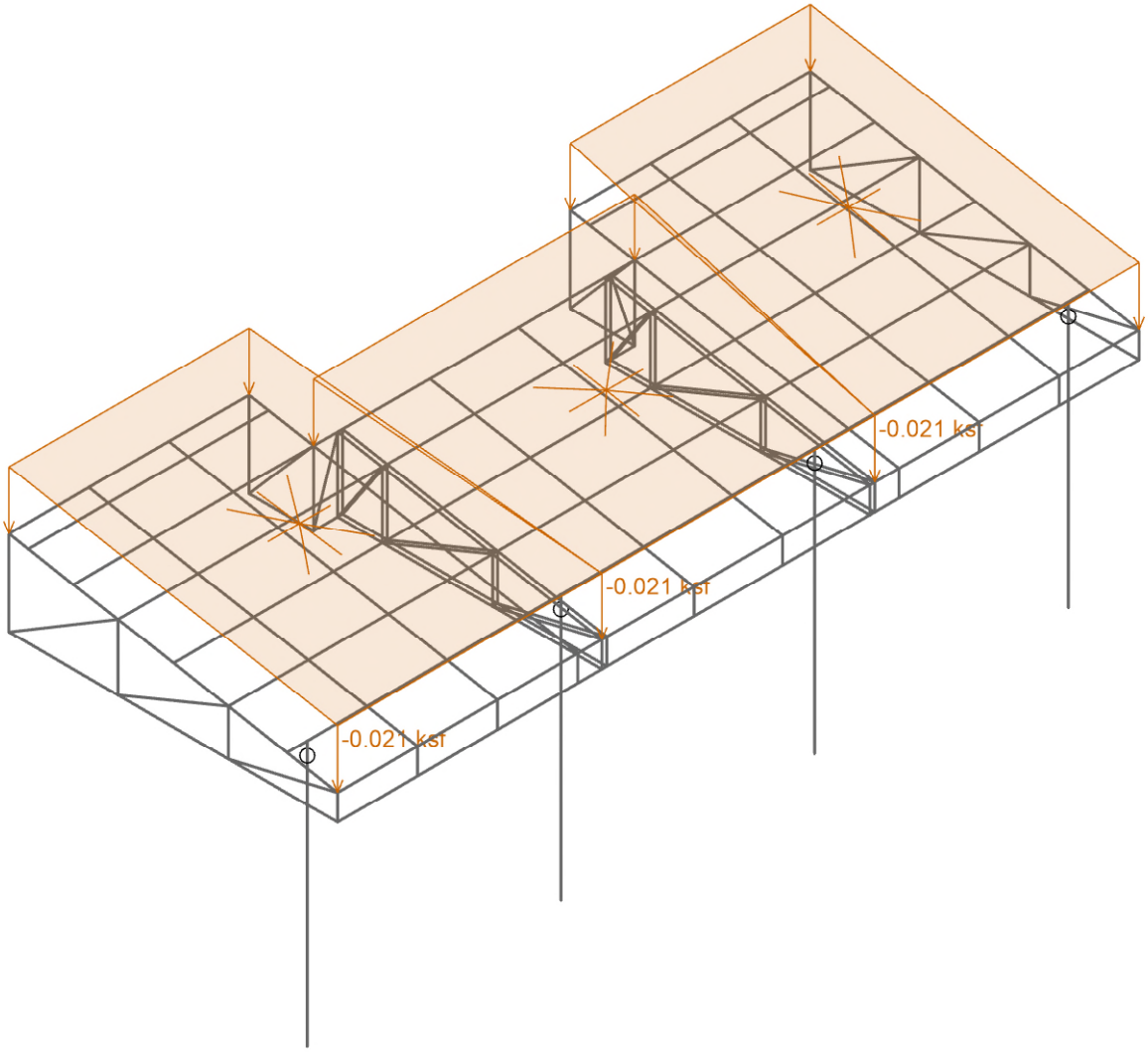

Loads: BLC 3, Wind Load
Envelope Only Solution

RISA A NEMETSCHEK COMPANY	YJ INC	Salud! Bar & Grill - Patio Cover	SK-12
	I.I.		Aug 22, 2023 at 01:28 PM
	JTS_62523_R	WIND LOAD	62523_Salud Bar & Grill_Pati…

PRSG20230449

City of Puyallup
Development & Permitting Services
ISSUED PERMIT

Building	Planning
Engineering	Public Works
Fire	Traffic

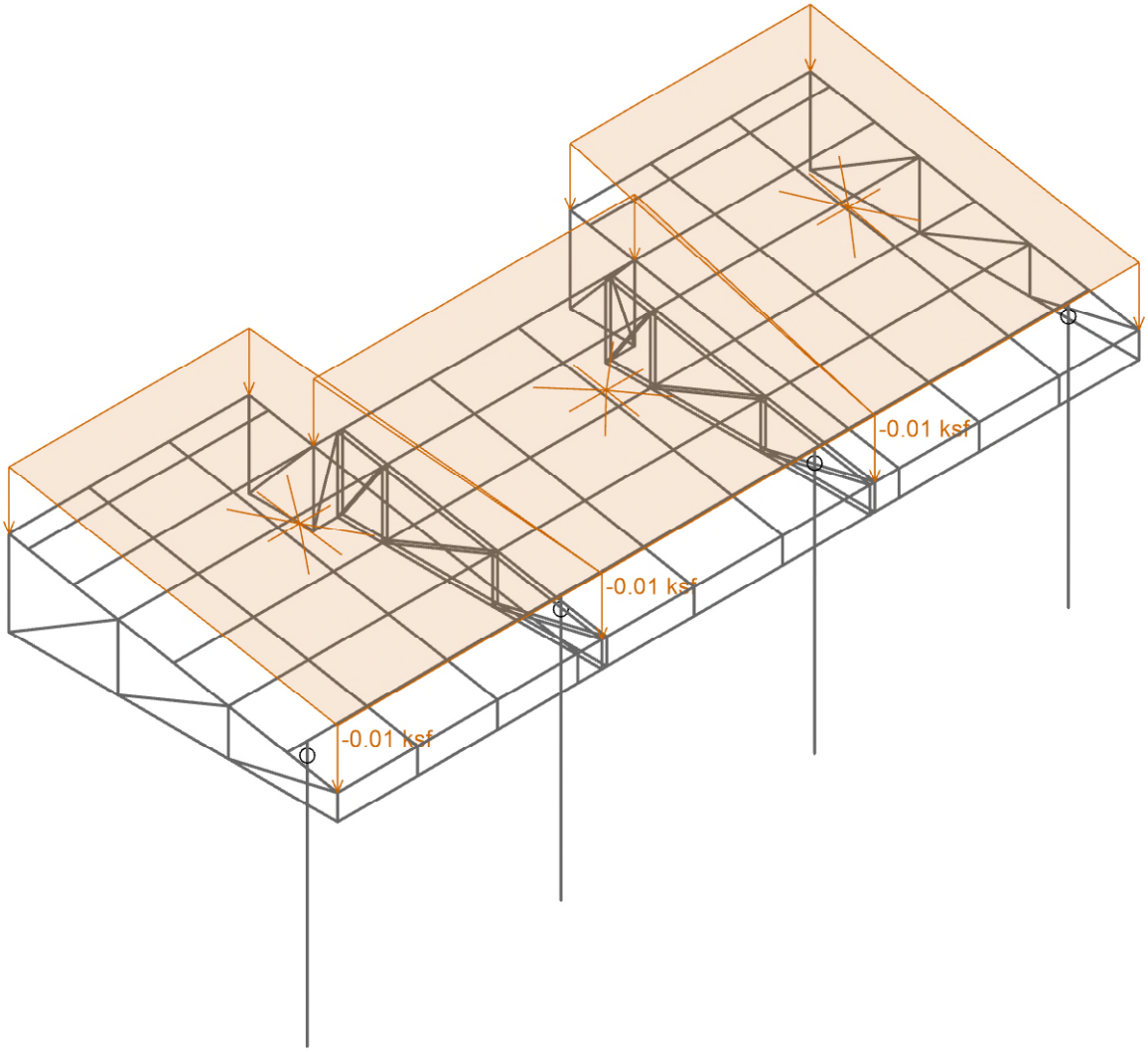

Loads: BLC 4, Roof Live Load
Envelope Only Solution

RISA A NEMETSCHEK COMPANY	YJ INC	Salud! Bar & Grill - Patio Cover	SK-13
	I.I.		Aug 22, 2023 at 01:28 PM
	JTS_62523_R	ROOF LIVE LOAD	62523_Salud Bar & Grill_Pati…

PRSG20230449

City of Puyallup
Development & Permitting Services
ISSUED PERMIT

Building	Planning
Engineering	Public Works
Fire	Traffic

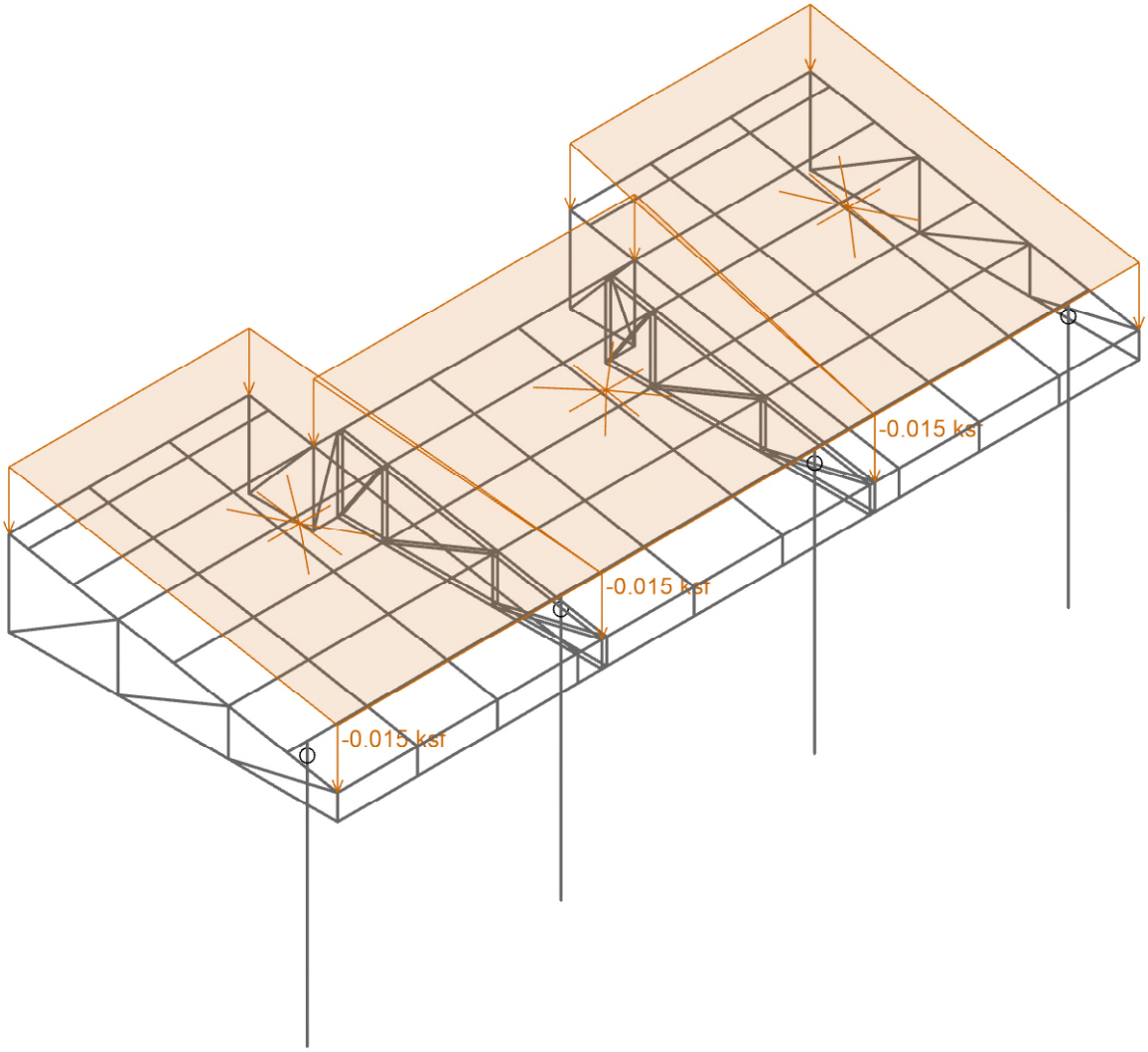

Loads: BLC 5, Snow Load
Envelope Only Solution

RISA	YJ INC	Salud! Bar & Grill - Patio Cover	SK-14
	I.I.		Aug 22, 2023 at 01:28 PM
	JTS_62523_R	SNOW LOAD	62523_Salud Bar & Grill_Pati…

PRSG20230449

Model Settings

Number of Reported Sections	5
Number of Internal Sections	100
Member Area Load Mesh Size (in^2)	144
Consider Shear Deformation	Yes
Consider Torsional Warping	Yes
Approximate Mesh Size (in)	24
Transfer Forces Between Intersecting Wood Walls	Yes
Increase Wood Wall Nailing Capacity for Wind Loads	Yes
Include P-Delta for Walls	Yes
Optimize Masonry and Wood Walls	Yes
Maximum Number of Iterations	3
Single	No
Multiple (Optimum)	Yes
Maximum	No

Global Axis corresponding to vertical direction	Y
Convert Existing Data	Yes
Default Global Plane for z-axis	XZ
Plate Local Axis Orientation	Nodal

Hot Rolled Steel	AISC 15th (360-16): ASD
Stiffness Adjustment	Yes (Iterative)
Notional Annex	None
Connections	AISC 15th (360-16): ASD
Cold Formed Steel	AISI S100-16: ASD
Stiffness Adjustment	Yes (Iterative)
Wood	AWC NDS-15 / SDPWS-15 ASD
Temperature	< 100F
Concrete	ACI 318-14
Masonry	TMS 402-16: ASD
Aluminum	AA ADM1-15: ASD
Structure Type	Building
Stiffness Adjustment	Yes (Iterative)
Stainless	AISC 14th (360-10): ASD
Stiffness Adjustment	Yes (Iterative)

Analysis Methodology	Exact Integration Method
Parme Beta Factor	0.65

Compression Stress Block	Rectangular Stress Block
Analyze using Cracked Sections	Yes
Leave room for horizontal rebar splices (2*d bar spacing)	Yes
List forces which were ignored for design in the Detail Report	Yes

Column Min Steel	1
Column Max Steel	8
Rebar Material Spec	ASTM A615
Warn if beam-column framing arrangement is not understood	No
Number of Shear Regions	4
Region 2 & 3 Spacing Increase Increment (in)	4

Code	ASCE 7-16

Model Settings (Continued)

Risk Category	I or II
Drift Cat	Other
Base Elevation (ft)	
Include the weight of the structure in base shear calcs	Yes
S_1 (g)	1
SD_1 (g)	1
SD_S (g)	1
T_L (sec)	5
T Z (sec)	
T X (sec)	
C_tZ	0.02
C_tX	0.02
C_tExp. Z	0.75
C_tExp. X	0.75
R Z	3
R X	3
Ω_0Z	1
Ω_0X	1
C_dZ	1
C_dX	1
ρ Z	1
ρ X	1

PRSG20230449

Basic Load Cases

	BLC Description	Category	Y Gravity	Distributed	Area(Member)
1	Self Weight	DL	-1		
2	Cover Load	DL			6
3	Wind Load	WL			3
4	Roof Live Load	RLL			3
5	Snow Load	SL			3
6	BLC 2 Transient Area Loads	None		326	
7	BLC 3 Transient Area Loads	None		218	
8	BLC 4 Transient Area Loads	None		218	
9	BLC 5 Transient Area Loads	None		218	

Load Combinations

	Description	Solve	P-Delta	BLC	Factor	BLC	Factor	BLC	Factor
1	ASCE ASD 1	Yes	Y	DL	1				
2	ASCE ASD 3 (a)	Yes	Y	DL	1	RLL	1		
3	ASCE ASD 3 (b)	Yes	Y	DL	1	SL	1		
4	ASCE ASD 4 (a)	Yes	Y	DL	1	RLL	0.75		
5	ASCE ASD 4 (b)	Yes	Y	DL	1	SL	0.75		
6	ASCE ASD 5 (a)	Yes	Y	DL	1	WL	0.6		
7	ASCE ASD 6 (a)	Yes	Y	DL	1	WL	0.45	RLL	0.75
8	ASCE ASD 6 (c)	Yes	Y	DL	1	WL	0.45	SL	0.75
9	ASCE ASD 6 (e)	Yes	Y	DL	1	WL	0.45		
10	ASCE ASD 7	Yes	Y	DL	0.6	WL	0.6		
11	ASCE ASD 5 (a)	Yes	Y	DL	1	WL	-0.6		
12	ASCE ASD 6 (a)	Yes	Y	DL	1	WL	-0.45	RLL	0.75
13	ASCE ASD 6 (c)	Yes	Y	DL	1	WL	-0.45	SL	0.75
14	ASCE ASD 6 (e)	Yes	Y	DL	1	WL	-0.45		
15	ASCE ASD 7	Yes	Y	DL	0.6	WL	-0.6		

Member Area Loads (BLC 2 : Cover Load)

	Node A	Node B	Node C	Node D	Direction	Load Direction	Magnitude [ksf]
1	N39	N34	N35	N33	Y	Two Way	-0.002
2	N33	N35	N71	N69	Y	Two Way	-0.002
3	N75	N70	N71	N69	Y	Two Way	-0.002
4	N35	N34	N25	N63	Y	Two Way	-0.002
5	N63	N27	N31	N81	Y	Two Way	-0.002
6	N81	N29	N70	N71	Y	Two Way	-0.002

Member Area Loads (BLC 3 : Wind Load)

	Node A	Node B	Node C	Node D	Direction	Load Direction	Magnitude [ksf]
1	N35	N34	N25	N63	Y	Two Way	-0.021
2	N63	N27	N31	N81	Y	Two Way	-0.021
3	N81	N29	N70	N71	Y	Two Way	-0.021

Member Area Loads (BLC 4 : Roof Live Load)

	Node A	Node B	Node C	Node D	Direction	Load Direction	Magnitude [ksf]
1	N35	N34	N25	N63	Y	Two Way	-0.01
2	N63	N27	N31	N81	Y	Two Way	-0.01
3	N81	N29	N70	N71	Y	Two Way	-0.01

PRSG20230449

Member Area Loads (BLC 5 : Snow Load)

	Node A	Node B	Node C	Node D	Direction	Load Direction	Magnitude [ksf]
1	N35	N34	N25	N63	Y	Two Way	-0.015
2	N63	N27	N31	N81	Y	Two Way	-0.015
3	N81	N29	N70	N71	Y	Two Way	-0.015

Hot Rolled Steel Properties

	Label	E [ksi]	G [ksi]	Nu	Therm. Coeff. [1e⁵°F⁻¹]	Density [k/ft³]	Yield [ksi]	Ry	Fu [ksi]	Rt
1	A992	29000	11154	0.3	0.65	0.49	50	1.1	65	1.1
2	A36 Gr.36	29000	11154	0.3	0.65	0.49	36	1.5	58	1.2
3	A572 Gr.50	29000	11154	0.3	0.65	0.49	50	1.1	65	1.1
4	A500 Gr.B RND	29000	11154	0.3	0.65	0.527	42	1.4	58	1.3
5	A500 Gr.B Rect	29000	11154	0.3	0.65	0.527	46	1.4	58	1.3
6	A53 Gr.B	29000	11154	0.3	0.65	0.49	35	1.6	60	1.2
7	A1085	29000	11154	0.3	0.65	0.49	50	1.4	65	1.3
8	A500 Gr.C RND	29000	11154	0.3	0.65	0.527	46	1.4	62	1.3
9	A500 Gr.C RECT	29000	11154	0.3	0.65	0.527	50	1.4	62	1.3
10	A913 Gr.65	29000	11154	0.3	0.65	0.49	65	1.1	80	1.1

Aluminum Properties

	Label	E [ksi]	G [ksi]	Nu	Therm. Coeff. [1e⁵°F⁻¹]	Density [k/ft³]	Table B.4	kt	Ftu [ksi]	Fty [ksi]	Fcy [ksi]	Fsu [ksi]	Ct
1	3003-H14	10100	3787.5	0.33	1.3	0.173	Table B.4-1	1	19	16	13	12	141
2	6061-T6	10100	3787.5	0.33	1.3	0.173	Table B.4-2	1	38	35	35	24	141
3	6063-T5	10100	3787.5	0.33	1.3	0.173	Table B.4-2	1	22	16	16	13	141
4	6063-T6	10100	3787.5	0.33	1.3	0.173	Table B.4-2	1	30	25	25	19	141
5	5052-H34	10200	3787.5	0.33	1.3	0.173	Table B.4-1	1	34	26	24	20	141
6	6061-T6 W	10100	3787.5	0.33	1.3	0.173	Table B.4-1	1	24	15	15	15	141

Hot Rolled Steel Section Sets

	Label	Shape	Type	Design List	Material	Design Rule	Area [in²]	Iyy [in⁴]	Izz [in⁴]	J [in⁴]
1	HSS2.5X2.5X0.125	HSS2.5X2.5X2	Column	Tube	A500 Gr.B Rect	Typical	1.07	0.998	0.998	1.61

Aluminum Section Sets

	Label	Shape	Type	Design List	Material	Design Rule	Area [in²]	Iyy [in⁴]	Izz [in⁴]	J [in⁴]
1	RT1X1X0.125	RT1X1X0.125	Column	Rectangular Tubes	6061-T6 W	Typical	0.438	0.057	0.057	0.084
2	RT2X3X0.125	RT2X3X0.125	Column	Rectangular Tubes	6061-T6 W	Typical	1.19	0.772	1.47	1.53

Hot Rolled Steel Design Parameters

	Label	Shape	Length [ft]	Lb y-y [ft]	Lb z-z [ft]	Lcomp top [ft]	Channel Conn.	a [ft]	Function
1	M74	HSS2.5X2.5X0.125	8.734	Segment	Segment	Lbyy	N/A	N/A	Lateral
2	M84	HSS2.5X2.5X0.125	8.734	Segment	Segment	Lbyy	N/A	N/A	Lateral
3	M112	HSS2.5X2.5X0.125	8.734	Segment	Segment	Lbyy	N/A	N/A	Lateral
4	M122	HSS2.5X2.5X0.125	8.734	Segment	Segment	Lbyy	N/A	N/A	Lateral

Aluminum Design Parameters

	Label	Shape	Length [ft]	Lb y-y [ft]	Lb z-z [ft]	Lcomp top [ft]	Lcomp bot [ft]	Function
1	M1	RT1X1X0.125	8.67	Segment	Segment	Lbyy	Segment	Lateral
2	M2	RT1X1X0.125	8.67	Segment	Segment	Lbyy	Segment	Lateral

PRSG20230449

Aluminum Design Parameters (Continued)

	Label	Shape	Length [ft]	Lb y-y [ft]	Lb z-z [ft]	Lcomp top [ft]	Lcomp bot [ft]	Function
3	M3	RT1X1X0.125	8.67	Segment	Segment	Lbyy	Segment	Lateral
4	M4	RT2X3X0.125	8.67	Segment	Segment	Lbyy	Segment	Lateral
5	M5	RT2X3X0.125	8.67	Segment	Segment	Lbyy	Segment	Lateral
6	M6	RT2X3X0.125	8.851	Segment	Segment	Lbyy	Segment	Lateral
7	M7	RT2X3X0.125	0.847	Segment	Segment	Lbyy	Segment	Lateral
8	M8	RT2X3X0.125	8.851	Segment	Segment	Lbyy	Segment	Lateral
9	M9	RT2X3X0.125	0.847	Segment	Segment	Lbyy	Segment	Lateral
10	M10	RT2X3X0.125	8.71	Segment	Segment	Lbyy	Segment	Lateral
11	M11	RT2X3X0.125	8.71	Segment	Segment	Lbyy	Segment	Lateral
12	M12	RT1X1X0.125	8.71	Segment	Segment	Lbyy	Segment	Lateral
13	M13	RT1X1X0.125	8.71	Segment	Segment	Lbyy	Segment	Lateral
14	M16	RT1X1X0.125	7.917	Segment	Segment	Lbyy	Segment	Lateral
15	M17	RT2X3X0.125	11.011	Segment	Segment	Lbyy	Segment	Lateral
16	M18	RT2X3X0.125	0.847	Segment	Segment	Lbyy	Segment	Lateral
17	M21	RT2X3X0.125	8.67	Segment	Segment	Lbyy		Lateral
18	M22	RT2X3X0.125	8.71	Segment	Segment	Lbyy	Segment	Lateral
19	M23	RT2X3X0.125	8.71	Segment	Segment	Lbyy	Segment	Lateral
20	M24	RT1X1X0.125	8.71	Segment	Segment	Lbyy	Segment	Lateral
21	M25	RT1X1X0.125	8.71	Segment	Segment	Lbyy	Segment	Lateral
22	M28	RT1X1X0.125	7.916	Segment	Segment	Lbyy	Segment	Lateral
23	M29	RT2X3X0.125	11.011	Segment	Segment	Lbyy	Segment	Lateral
24	M30	RT2X3X0.125	0.847	Segment	Segment	Lbyy	Segment	Lateral
25	M33	RT2X3X0.125	8.71	Segment	Segment	Lbyy		Lateral
26	M34	RT2X3X0.125	8.71	Segment	Segment	Lbyy		Lateral
27	M53	RT2X3X0.125	2.817	Segment	Segment	Lbyy	Segment	Lateral
28	M54	RT1X1X0.125	2.43	Segment	Segment	Lbyy	Segment	Lateral
29	M55	RT1X1X0.125	0.793	Segment	Segment	Lbyy	Segment	Lateral
30	M56	RT1X1X0.125	2.125	Segment	Segment	Lbyy	Segment	Lateral
31	M57	RT1X1X0.125	3.229	Segment	Segment	Lbyy	Segment	Lateral
32	M58	RT1X1X0.125	2.556	Segment	Segment	Lbyy	Segment	Lateral
33	M59	RT2X3X0.125	2.817	Segment	Segment	Lbyy	Segment	Lateral
34	M60	RT1X1X0.125	2.43	Segment	Segment	Lbyy	Segment	Lateral
35	M61	RT1X1X0.125	0.794	Segment	Segment	Lbyy	Segment	Lateral
36	M62	RT1X1X0.125	2.125	Segment	Segment	Lbyy	Segment	Lateral
37	M63	RT1X1X0.125	3.228	Segment	Segment	Lbyy	Segment	Lateral
38	M64	RT1X1X0.125	2.556	Segment	Segment	Lbyy	Segment	Lateral
39	M65	RT2X3X0.125	0.847	Segment	Segment	Lbyy	Segment	Lateral
40	M66	RT2X3X0.125	10.833	Segment	Segment	Lbyy	Segment	Lateral
41	M67	RT2X3X0.125	2.817	Segment	Segment	Lbyy	Segment	Lateral
42	M68	RT2X3X0.125	11.011	Segment	Segment	Lbyy	Segment	Lateral
43	M69	RT1X1X0.125	1.501	Segment	Segment	Lbyy	Segment	Lateral
44	M70	RT1X1X0.125	2.163	Segment	Segment	Lbyy	Segment	Lateral
45	M71	RT1X1X0.125	3.695	Segment	Segment	Lbyy	Segment	Lateral
46	M72	RT1X1X0.125	3.936	Segment	Segment	Lbyy	Segment	Lateral
47	M73	RT1X1X0.125	4.197	Segment	Segment	Lbyy	Segment	Lateral
48	M75	RT2X3X0.125	0.847	Segment	Segment	Lbyy	Segment	Lateral
49	M76	RT2X3X0.125	8.708	Segment	Segment	Lbyy	Segment	Lateral
50	M77	RT1X1X0.125	2.43	Segment	Segment	Lbyy	Segment	Lateral
51	M78	RT2X3X0.125	8.851	Segment	Segment	Lbyy	Segment	Lateral
52	M79	RT1X1X0.125	1.501	Segment	Segment	Lbyy	Segment	Lateral
53	M80	RT1X1X0.125	2.162	Segment	Segment	Lbyy	Segment	Lateral
54	M81	RT1X1X0.125	3.695	Segment	Segment	Lbyy	Segment	Lateral
55	M82	RT1X1X0.125	3.936	Segment	Segment	Lbyy	Segment	Lateral
56	M83	RT1X1X0.125	2.616	Segment	Segment	Lbyy	Segment	Lateral
57	M85	RT2X3X0.125	0.847	Segment	Segment	Lbyy	Segment	Lateral

Aluminum Design Parameters (Continued)

	Label	Shape	Length [ft]	Lb y-y [ft]	Lb z-z [ft]	Lcomp top [ft]	Lcomp bot [ft]	Function
58	M86	RT2X3X0.125	8.708	Segment	Segment	Lbyy	Segment	Lateral
59	M87	RT1X1X0.125	2.43	Segment	Segment	Lbyy	Segment	Lateral
60	M88	RT2X3X0.125	8.851	Segment	Segment	Lbyy	Segment	Lateral
61	M89	RT1X1X0.125	1.501	Segment	Segment	Lbyy	Segment	Lateral
62	M90	RT1X1X0.125	2.162	Segment	Segment	Lbyy	Segment	Lateral
63	M91	RT1X1X0.125	3.695	Segment	Segment	Lbyy	Segment	Lateral
64	M92	RT1X1X0.125	3.936	Segment	Segment	Lbyy	Segment	Lateral
65	M93	RT1X1X0.125	2.616	Segment	Segment	Lbyy	Segment	Lateral
66	M94	RT2X3X0.125	0.847	Segment	Segment	Lbyy	Segment	Lateral
67	M95	RT2X3X0.125	8.708	Segment	Segment	Lbyy	Segment	Lateral
68	M96	RT1X1X0.125	2.43	Segment	Segment	Lbyy	Segment	Lateral
69	M97	RT2X3X0.125	8.851	Segment	Segment	Lbyy	Segment	Lateral
70	M98	RT1X1X0.125	1.501	Segment	Segment	Lbyy	Segment	Lateral
71	M99	RT1X1X0.125	2.162	Segment	Segment	Lbyy	Segment	Lateral
72	M100	RT1X1X0.125	3.695	Segment	Segment	Lbyy	Segment	Lateral
73	M101	RT1X1X0.125	3.936	Segment	Segment	Lbyy	Segment	Lateral
74	M102	RT1X1X0.125	2.616	Segment	Segment	Lbyy	Segment	Lateral
75	M103	RT2X3X0.125	0.847	Segment	Segment	Lbyy	Segment	Lateral
76	M104	RT2X3X0.125	10.833	Segment	Segment	Lbyy	Segment	Lateral
77	M105	RT2X3X0.125	2.817	Segment	Segment	Lbyy	Segment	Lateral
78	M106	RT2X3X0.125	11.011	Segment	Segment	Lbyy	Segment	Lateral
79	M107	RT1X1X0.125	1.501	Segment	Segment	Lbyy	Segment	Lateral
80	M108	RT1X1X0.125	2.163	Segment	Segment	Lbyy	Segment	Lateral
81	M109	RT1X1X0.125	3.695	Segment	Segment	Lbyy	Segment	Lateral
82	M110	RT1X1X0.125	3.936	Segment	Segment	Lbyy	Segment	Lateral
83	M111	RT1X1X0.125	4.197	Segment	Segment	Lbyy	Segment	Lateral
84	M113	RT2X3X0.125	0.847	Segment	Segment	Lbyy	Segment	Lateral
85	M114	RT2X3X0.125	8.708	Segment	Segment	Lbyy	Segment	Lateral
86	M115	RT1X1X0.125	2.43	Segment	Segment	Lbyy	Segment	Lateral
87	M116	RT2X3X0.125	8.851	Segment	Segment	Lbyy	Segment	Lateral
88	M117	RT1X1X0.125	1.501	Segment	Segment	Lbyy	Segment	Lateral
89	M118	RT1X1X0.125	2.162	Segment	Segment	Lbyy	Segment	Lateral
90	M119	RT1X1X0.125	3.695	Segment	Segment	Lbyy	Segment	Lateral
91	M120	RT1X1X0.125	3.936	Segment	Segment	Lbyy	Segment	Lateral
92	M121	RT1X1X0.125	2.616	Segment	Segment	Lbyy	Segment	Lateral
93	M123	RT2X3X0.125	11.011	Segment	Segment	Lbyy	Segment	Lateral
94	M124	RT2X3X0.125	0.847	Segment	Segment	Lbyy	Segment	Lateral
95	M125	RT2X3X0.125	11.011	Segment	Segment	Lbyy	Segment	Lateral
96	M126	RT2X3X0.125	0.847	Segment	Segment	Lbyy	Segment	Lateral
97	M127	RT2X3X0.125	11.011	Segment	Segment	Lbyy	Segment	Lateral
98	M128	RT2X3X0.125	0.847	Segment	Segment	Lbyy	Segment	Lateral
99	M129	RT2X3X0.125	11.011	Segment	Segment	Lbyy	Segment	Lateral
100	M130	RT2X3X0.125	0.847	Segment	Segment	Lbyy	Segment	Lateral
101	M131	RT1X1X0.125	8.71	Segment	Segment	Lbyy	Segment	Lateral
102	M132	RT1X1X0.125	8.67	Segment	Segment	Lbyy	Segment	Lateral
103	M133	RT1X1X0.125	8.71	Segment	Segment	Lbyy	Segment	Lateral
104	M134	RT1X1X0.125	8.71	Segment	Segment	Lbyy	Segment	Lateral
105	M135	RT1X1X0.125	8.71	Segment	Segment	Lbyy	Segment	Lateral
106	M138	RT1X1X0.125	7.917	Segment	Segment	Lbyy	Segment	Lateral
107	M139	RT1X1X0.125	7.916	Segment	Segment	Lbyy	Segment	Lateral

Envelope Node Reactions

	Node Label		X [k]	LC	Y [k]	LC	Z [k]	LC	MX [k-ft]	LC	MY [k-ft]	LC	MZ [k-ft]	LC
0	N87	max	0	8	1.296	8	0	8	0.001	8	0.001	8	0	15
1		min	0	15	-0.467	15	0	15	0	15	0	11	0	8

Envelope Node Reactions (Continued)

	Node Label		X [k]	LC	Y [k]	LC	Z [k]	LC	MX [k-ft]	LC	MY [k-ft]	LC	MZ [k-ft]	LC
2	N51	max	0	8	1.286	8	0	8	0.001	8	0	11	0	15
3		min	0	15	-0.462	15	0	15	0	15	-0.001	8	-0.001	8
4	N41	max	0	8	0.77	8	0	8	0.001	8	0.007	15	0.001	15
5		min	0	15	-0.273	15	0	15	0	15	-0.015	8	-0.002	8
6	N77	max	0	8	0.767	8	0	8	0	8	0.015	8	0.001	15
7		min	0	15	-0.271	15	0	15	0	15	-0.007	15	-0.002	8
8	N31	max	0.014	8	0.452	8	0.012	15	0	15	0	15	0	15
9		min	-0.007	15	-0.2	15	-0.036	8	0	1	0	1	0	1
10	N27	max	0.063	8	0.446	8	0.005	15	0	15	0	15	0	15
11		min	-0.031	15	-0.197	15	-0.012	8	0	1	0	1	0	1
12	N44	max	0.027	15	0.213	8	0.006	15	0	15	0	15	0	15
13		min	-0.056	8	-0.087	15	-0.012	8	0	1	0	1	0	1
14	N39	max	0.127	11	0.186	8	0.024	15	0	15	0	15	0	15
15		min	-0.046	8	-0.047	15	-0.053	8	0	1	0	1	0	1
16	N75	max	0.126	11	0.186	8	0.053	8	0	15	0	15	0	15
17		min	-0.045	8	-0.047	15	-0.024	15	0	1	0	1	0	1
18	N7	max	0.012	8	0.184	8	0.003	15	0	15	0	15	0	15
19		min	-0.01	11	-0.083	15	-0.005	8	0	1	0	1	0	1
20	N13	max	0.011	8	0.183	8	0.005	8	0	15	0	15	0	15
21		min	-0.01	11	-0.082	15	-0.002	15	0	1	0	1	0	1
22	N118	max	0.006	15	0.181	8	0.004	8	0	15	0	15	0	15
23		min	-0.01	8	-0.082	15	-0.002	15	0	1	0	1	0	1
24	N4	max	0.006	15	0.178	8	0.005	15	0	15	0	15	0	15
25		min	-0.017	8	-0.082	15	-0.013	8	0	1	0	1	0	1
26	N108	max	0.007	15	0.177	8	0.002	15	0	15	0	15	0	15
27		min	-0.012	8	-0.08	15	-0.004	8	0	1	0	1	0	1
28	N1	max	0.003	15	0.175	8	0	15	0	15	0	15	0	15
29		min	-0.011	8	-0.08	15	0	8	0	1	0	1	0	1
30	N32	max	0.027	8	0.162	8	0.053	8	0	15	0	15	0	15
31		min	-0.009	15	-0.057	15	-0.02	15	0	1	0	1	0	1
32	N145	max	0.012	8	0.077	8	0	15	0	15	0	15	0	15
33		min	-0.006	15	-0.035	15	0	8	0	1	0	1	0	1
34	N160	max	0.012	8	0.075	8	0	8	0	15	0	15	0	15
35		min	-0.005	15	-0.034	15	0	15	0	1	0	1	0	1
36	N25	max	0.005	15	0.034	15	0.007	15	0	15	0	15	0	15
37		min	-0.012	8	-0.07	8	-0.014	8	0	1	0	1	0	1
38	N29	max	0.004	15	0.032	15	0.014	8	0	15	0	15	0	15
39		min	-0.01	8	-0.066	8	-0.007	15	0	1	0	1	0	1
40	N158	max	0.006	8	0.049	8	0	15	0	15	0	15	0	15
41		min	-0.003	15	-0.023	15	0	8	0	1	0	1	0	1
42	N28	max	0.029	8	0.027	11	0.023	8	0	15	0	15	0	15
43		min	-0.01	15	-0.043	8	-0.011	15	0	1	0	1	0	1
44	N70	max	0.024	8	0.043	8	0.021	15	0	15	0	15	0	15
45		min	-0.114	11	0.002	15	-0.044	8	0	1	0	1	0	1
46	N34	max	0.023	8	0.043	8	0.043	8	0	15	0	15	0	15
47		min	-0.113	11	0.002	15	-0.021	15	0	1	0	1	0	1
48	N159	max	0.001	15	0.004	15	0	8	0	15	0	15	0	15
49		min	-0.003	8	-0.009	8	0	15	0	1	0	1	0	1
50	N30	max	0.003	15	0.004	11	0.01	15	0	15	0	15	0	15
51		min	-0.007	8	0.001	10	-0.021	8	0	1	0	1	0	1
52	N26	max	0.003	15	0.004	11	0.021	8	0	15	0	15	0	15
53		min	-0.007	8	0.001	10	-0.01	15	0	1	0	1	0	1
54	Totals:	max	0	8	6.944	8	0	8						
55		min	0	15	-2.582	15	0	15						

Envelope AISC 15TH (360-16): ASD Member Steel Code Checks

	Member	Shape	Code Check	Loc[ft]	LC	Shear Check	Loc[ft]	Dir	LC	Pnc/om [k]	Pnt/om [k]	Mnyy/om [k-ft]	Mnzz/om [k-ft]	Cb	Eqn
0	M74	HSS2.5X2.5X2	0.058	0	8	0.008	8.734	y	8	13.346	29.473	2.174	2.174	1.667	H1-1b*
1	M84	HSS2.5X2.5X2	0.096	0	8	0	8.734	y	8	13.346	29.473	2.174	2.174	1.667	H1-1b*
2	M112	HSS2.5X2.5X2	0.057	0	8	0.008	8.734	y	8	13.346	29.473	2.174	2.174	1.667	H1-1b*
3	M122	HSS2.5X2.5X2	0.097	0	8	0	8.734	z	8	13.346	29.473	2.174	2.174	1.667	H1-1b*

Envelope AA ADM1-15: ASD - BUILDING Member Aluminum Code Checks

	Member	Shape	Code Check	Loc[ft]	LC	Shear Check	Loc[ft]	Dir	LC	Pnc/Om[k]	Pnt/Om[k]	Mny/Om[k-ft]	Mnz/Om[k-ft]	Vny/Om[k]	Vnz/Om[k]	Cb	Eqn
0	M1	RT1X1X0.125	0.201	2.89	8	0.151	5.87	y	8	3.264	3.982	0.086	0.086	0.852	0.852	1.932	H.1-1
1	M2	RT1X1X0.125	0.727	8.67	8	0.121	8.67	y	8	2.1	3.982	0.086	0.086	0.852	0.852	2.878	H.1-1
2	M3	RT1X1X0.125	0.492	0	8	0.158	0	y	8	2.099	3.982	0.086	0.086	0.852	0.852	2.828	H.1-1
3	M4	RT2X3X0.125	0.14	8.67	8	0.112	0	y	8	9.271	10.818	0.585	0.742	3.58	2.216	2.459	H.1-1
4	M5	RT2X3X0.125	0.202	0	8	0.082	2.8	z	8	9.27	10.818	0.585	0.742	3.58	2.216	2.196	H.1-1
5	M6	RT2X3X0.125	0.383	3.319	8	0.148	8.851	y	8	10.374	10.818	0.585	0.742	3.58	2.216	1.1	H.1-1
6	M7	RT2X3X0.125	0.238	0	8	0.132	0.847	z	8	10.818	10.818	0.585	0.742	3.58	2.216	1.205	H.1-1
7	M8	RT2X3X0.125	0.383	3.319	8	0.147	8.851	y	8	10.374	10.818	0.585	0.742	3.58	2.216	1.099	H.1-1
8	M9	RT2X3X0.125	0.237	0	8	0.13	0.847	z	8	10.818	10.818	0.585	0.742	3.58	2.216	1.194	H.1-1
9	M10	RT2X3X0.125	0.324	0	8	0.158	7.893	z	8	9.53	10.818	0.585	0.742	3.58	2.216	2.336	H.1-1
10	M11	RT2X3X0.125	0.184	3.357	8	0.181	0.817	y	8	9.517	10.818	0.585	0.742	3.58	2.216	2.044	H.1-1
11	M12	RT1X1X0.125	0.826	8.71	8	0.184	0	y	8	3.856	3.982	0.086	0.086	0.852	0.852	1.668	H.1-1
12	M13	RT1X1X0.125	0.888	7.893	8	0.157	0	y	8	2.279	3.982	0.086	0.086	0.852	0.852	2.369	H.1-1
13	M16	RT1X1X0.125	0.386	2.639	8	0.259	5.278	y	8	3.381	3.982	0.086	0.086	0.852	0.852	2.098	H.1-1
14	M17	RT2X3X0.125	0.469	4.473	8	0.222	11.011	z	8	10.374	10.818	0.585	0.742	3.58	2.216	1.004	H.1-1
15	M18	RT2X3X0.125	0.36	0	8	0.228	0.847	z	8	10.818	10.818	0.585	0.742	3.58	2.216	1.213	H.1-1
16	M21	RT2X3X0.125	0.704	8.489	8	0.389	8.58	y	8	9.437	10.818	0.585	0.742	3.58	2.216	2.414	H.1-1
17	M22	RT2X3X0.125	0.322	0	8	0.157	7.893	z	8	9.53	10.818	0.585	0.742	3.58	2.216	2.335	H.1-1
18	M23	RT2X3X0.125	0.184	3.357	8	0.18	0.817	y	8	9.522	10.818	0.585	0.742	3.58	2.216	2.045	H.1-1
19	M24	RT1X1X0.125	0.835	8.71	8	0.183	0	y	8	3.852	3.982	0.086	0.086	0.852	0.852	1.658	H.1-1
20	M25	RT1X1X0.125	0.881	7.893	8	0.156	0	y	8	2.282	3.982	0.086	0.086	0.852	0.852	2.381	H.1-1
21	M28	RT1X1X0.125	0.384	2.639	8	0.263	5.277	y	8	3.391	3.982	0.086	0.086	0.852	0.852	1.985	H.1-1
22	M29	RT2X3X0.125	0.466	4.473	8	0.22	11.011	z	8	10.374	10.818	0.585	0.742	3.58	2.216	1.004	H.1-1
23	M30	RT2X3X0.125	0.357	0	8	0.226	0.847	z	8	10.818	10.818	0.585	0.742	3.58	2.216	1.213	H.1-1
24	M33	RT2X3X0.125	0.56	8.71	8	0.325	0.635	y	8	10.818	10.818	0.585	0.742	3.58	2.216	1.591	H.1-1
25	M34	RT2X3X0.125	0.57	8.71	8	0.324	0.635	y	8	10.818	10.818	0.585	0.742	3.58	2.216	1.594	H.1-1
26	M53	RT2X3X0.125	0.123	0	8	0.014	2.817	z	8	9.335	10.818	0.585	0.742	3.58	2.216	1.804	H.1-1
27	M54	RT1X1X0.125	0.294	0	8	0.039	2.43	z	8	2.451	3.982	0.086	0.086	0.852	0.852	2.16	H.1-1
28	M55	RT1X1X0.125	0.151	0.793	8	0.058	0.793	z	8	3.856	3.982	0.086	0.086	0.852	0.852	1.698	H.1-1
29	M56	RT1X1X0.125	0.061	0	8	0.006	2.125	z	8	2.7	3.982	0.086	0.086	0.852	0.852	1.109	H.1-1
30	M57	RT1X1X0.125	0.208	3.229	8	0.039	3.229	z	8	1.831	3.982	0.086	0.086	0.852	0.852	2.301	H.1-1
31	M58	RT1X1X0.125	0.058	0	8	0.012	2.556	y	8	2.351	3.982	0.086	0.086	0.852	0.852	2.168	H.1-1
32	M59	RT2X3X0.125	0.126	0	8	0.014	2.817	z	8	9.335	10.818	0.585	0.742	3.58	2.216	1.804	H.1-1
33	M60	RT1X1X0.125	0.289	0	8	0.037	2.43	z	8	2.451	3.982	0.086	0.086	0.852	0.852	2.16	H.1-1
34	M61	RT1X1X0.125	0.155	0.794	8	0.054	0.794	z	8	3.855	3.982	0.086	0.086	0.852	0.852	1.18	H.1-1
35	M62	RT1X1X0.125	0.054	0	8	0.004	2.125	z	8	2.7	3.982	0.086	0.086	0.852	0.852	1.105	H.1-1
36	M63	RT1X1X0.125	0.208	3.228	8	0.038	3.228	z	8	1.832	3.982	0.086	0.086	0.852	0.852	2.3	H.1-1
37	M64	RT1X1X0.125	0.139	0	8	0.013	2.556	y	8	2.35	3.982	0.086	0.086	0.852	0.852	2.306	H.1-1
38	M65	RT2X3X0.125	0.39	0	8	0.185	0.847	z	8	10.818	10.818	0.585	0.742	3.58	2.216	1.178	H.1-1
39	M66	RT2X3X0.125	0.099	7.335	8	0.025	3.498	z	8	8.509	10.818	0.585	0.742	3.58	2.216	2.335	H.1-1
40	M67	RT2X3X0.125	0.202	2.817	8	0.061	2.817	z	8	9.335	10.818	0.585	0.742	3.58	2.216	2.18	H.1-1
41	M68	RT2X3X0.125	0.353	9.405	8	0.22	9.405	y	8	10.563	10.818	0.585	0.742	3.58	2.216	2.23	H.1-1
42	M69	RT1X1X0.125	0.508	0	8	0.028	1.501	z	8	3.227	3.982	0.086	0.086	0.852	0.852	2.185	H.1-1
43	M70	RT1X1X0.125	0.372	0	8	0.061	2.163	z	8	2.669	3.982	0.086	0.086	0.852	0.852	2.224	H.1-1
44	M71	RT1X1X0.125	0.132	0	8	0.018	0	y	8	1.488	3.982	0.086	0.086	0.852	0.852	2.928	H.1-1
45	M72	RT1X1X0.125	0.118	0	11	0.072	3.936	y	8	1.316	3.982	0.086	0.086	0.852	0.852	2.939	H.1-1
46	M73	RT1X1X0.125	0.491	4.197	8	0.067	4.197	y	8	1.154	3.982	0.086	0.086	0.852	0.852	2.758	H.1-1

Envelope AA ADM1-15: ASD - BUILDING Member Aluminum Code Checks (Continued)

	Member	Shape	Code Check	Loc[ft]	LC	Shear Check	Loc[ft]	Dir	LC	Pnc/Om[k]	Pnt/Om[k]	Mny/Om[k-ft]	Mnz/Om[k-ft]	Vny/Om[k]	Vnz/Om[k]	Cb	Eqn
47	M75	RT2X3X0.125	0.175	0	8	0.031	0.847	z	8	10.818	10.818	0.585	0.742	3.58	2.216	1.349	H.1-1
48	M76	RT2X3X0.125	0.024	6.622	8	0.011	3.538	z	8	8.465	10.818	0.585	0.742	3.58	2.216	1.237	H.1-1
49	M77	RT1X1X0.125	0.047	2.43	8	0.002	2.43	y	8	2.451	3.982	0.086	0.086	0.852	0.852	2.253	H.1-1
50	M78	RT2X3X0.125	0.271	7.191	8	0.099	7.191	y	8	10.563	10.818	0.585	0.742	3.58	2.216	2.257	H.1-1
51	M79	RT1X1X0.125	0.155	0	8	0.012	1.501	y	8	3.227	3.982	0.086	0.086	0.852	0.852	2.172	H.1-1
52	M80	RT1X1X0.125	0.052	0	8	0.004	2.162	y	8	2.669	3.982	0.086	0.086	0.852	0.852	2.2	H.1-1
53	M81	RT1X1X0.125	0.061	0	8	0.006	0	y	8	1.488	3.982	0.086	0.086	0.852	0.852	2.764	H.1-1
54	M82	RT1X1X0.125	0.038	0	8	0.006	3.936	y	8	1.316	3.982	0.086	0.086	0.852	0.852	1.779	H.1-1
55	M83	RT1X1X0.125	0.113	2.616	8	0.006	2.616	y	8	2.303	3.982	0.086	0.086	0.852	0.852	2.353	H.1-1
56	M85	RT2X3X0.125	0.177	0	8	0.031	0.847	z	8	10.818	10.818	0.585	0.742	3.58	2.216	1.345	H.1-1
57	M86	RT2X3X0.125	0.022	6.35	8	0.01	3.538	z	8	8.465	10.818	0.585	0.742	3.58	2.216	1.217	H.1-1
58	M87	RT1X1X0.125	0.071	2.43	8	0.003	2.43	z	8	2.451	3.982	0.086	0.086	0.852	0.852	2.245	H.1-1
59	M88	RT2X3X0.125	0.273	7.191	8	0.099	7.191	y	8	10.563	10.818	0.585	0.742	3.58	2.216	2.256	H.1-1
60	M89	RT1X1X0.125	0.151	0	8	0.012	1.501	y	8	3.227	3.982	0.086	0.086	0.852	0.852	2.173	H.1-1
61	M90	RT1X1X0.125	0.067	0	8	0.003	2.162	y	8	2.669	3.982	0.086	0.086	0.852	0.852	2.201	H.1-1
62	M91	RT1X1X0.125	0.063	0	8	0.006	0	y	8	1.488	3.982	0.086	0.086	0.852	0.852	2.75	H.1-1
63	M92	RT1X1X0.125	0.037	0	8	0.006	3.936	y	8	1.316	3.982	0.086	0.086	0.852	0.852	1.785	H.1-1
64	M93	RT1X1X0.125	0.13	2.616	8	0.005	2.616	y	8	2.303	3.982	0.086	0.086	0.852	0.852	2.354	H.1-1
65	M94	RT2X3X0.125	0.201	0	8	0.094	0.847	z	8	10.818	10.818	0.585	0.742	3.58	2.216	1.267	H.1-1
66	M95	RT2X3X0.125	0.039	0	8	0.006	3.538	z	8	8.509	10.818	0.585	0.742	3.58	2.216	1.058	H.1-1
67	M96	RT1X1X0.125	0.064	2.43	8	0.003	2.43	z	8	2.451	3.982	0.086	0.086	0.852	0.852	2.248	H.1-1
68	M97	RT2X3X0.125	0.248	7.191	8	0.176	7.191	y	8	10.563	10.818	0.585	0.742	3.58	2.216	2.259	H.1-1
69	M98	RT1X1X0.125	0.216	0	8	0.013	1.501	y	8	3.227	3.982	0.086	0.086	0.852	0.852	2.171	H.1-1
70	M99	RT1X1X0.125	0.05	0	8	0.005	2.162	y	8	2.669	3.982	0.086	0.086	0.852	0.852	2.202	H.1-1
71	M100	RT1X1X0.125	0.057	0	8	0.002	0	y	8	1.488	3.982	0.086	0.086	0.852	0.852	2.869	H.1-1
72	M101	RT1X1X0.125	0.108	0	8	0.011	3.936	y	8	1.316	3.982	0.086	0.086	0.852	0.852	1.767	H.1-1
73	M102	RT1X1X0.125	0.105	2.616	8	0.005	2.616	y	8	2.303	3.982	0.086	0.086	0.852	0.852	2.342	H.1-1
74	M103	RT2X3X0.125	0.388	0	8	0.185	0.847	z	8	10.818	10.818	0.585	0.742	3.58	2.216	1.177	H.1-1
75	M104	RT2X3X0.125	0.098	7.335	8	0.025	3.498	z	8	8.509	10.818	0.585	0.742	3.58	2.216	2.337	H.1-1
76	M105	RT2X3X0.125	0.202	2.817	8	0.062	2.817	z	8	9.335	10.818	0.585	0.742	3.58	2.216	2.18	H.1-1
77	M106	RT2X3X0.125	0.351	9.405	8	0.22	9.405	y	8	10.563	10.818	0.585	0.742	3.58	2.216	2.23	H.1-1
78	M107	RT1X1X0.125	0.506	0	8	0.028	1.501	z	8	3.227	3.982	0.086	0.086	0.852	0.852	2.185	H.1-1
79	M108	RT1X1X0.125	0.37	0	8	0.061	2.163	z	8	2.669	3.982	0.086	0.086	0.852	0.852	2.224	H.1-1
80	M109	RT1X1X0.125	0.131	0	8	0.018	0	y	8	1.488	3.982	0.086	0.086	0.852	0.852	2.927	H.1-1
81	M110	RT1X1X0.125	0.118	0	11	0.071	3.936	y	8	1.316	3.982	0.086	0.086	0.852	0.852	2.938	H.1-1
82	M111	RT1X1X0.125	0.489	4.197	8	0.067	4.197	y	8	1.154	3.982	0.086	0.086	0.852	0.852	2.753	H.1-1
83	M113	RT2X3X0.125	0.201	0	8	0.094	0.847	z	8	10.818	10.818	0.585	0.742	3.58	2.216	1.263	H.1-1
84	M114	RT2X3X0.125	0.036	0	8	0.007	8.708	y	8	8.509	10.818	0.585	0.742	3.58	2.216	1.064	H.1-1
85	M115	RT1X1X0.125	0.105	2.43	8	0.004	2.43	z	8	2.451	3.982	0.086	0.086	0.852	0.852	2.253	H.1-1
86	M116	RT2X3X0.125	0.246	7.191	8	0.176	7.191	y	8	10.563	10.818	0.585	0.742	3.58	2.216	2.258	H.1-1
87	M117	RT1X1X0.125	0.213	0	8	0.013	1.501	y	8	3.227	3.982	0.086	0.086	0.852	0.852	2.172	H.1-1
88	M118	RT1X1X0.125	0.068	0	8	0.004	2.162	y	8	2.669	3.982	0.086	0.086	0.852	0.852	2.201	H.1-1
89	M119	RT1X1X0.125	0.06	0	8	0.003	0	y	8	1.488	3.982	0.086	0.086	0.852	0.852	2.856	H.1-1
90	M120	RT1X1X0.125	0.106	0	8	0.011	3.936	y	8	1.316	3.982	0.086	0.086	0.852	0.852	1.773	H.1-1
91	M121	RT1X1X0.125	0.116	2.616	8	0.004	2.616	y	8	2.303	3.982	0.086	0.086	0.852	0.852	2.339	H.1-1
92	M123	RT2X3X0.125	0.481	4.702	8	0.159	9.29	y	8	10.374	10.818	0.585	0.742	3.58	2.216	1.005	H.1-1
93	M124	RT2X3X0.125	0.336	0	8	0.147	0.847	z	8	10.818	10.818	0.585	0.742	3.58	2.216	1.16	H.1-1
94	M125	RT2X3X0.125	0.241	2.179	8	0.226	11.011	z	8	10.783	10.818	0.585	0.742	3.58	2.216	1.871	H.1-1
95	M126	RT2X3X0.125	0.286	0	8	0.251	0.847	z	8	10.818	10.818	0.585	0.742	3.58	2.216	2.244	H.1-1
96	M127	RT2X3X0.125	0.478	4.817	8	0.159	9.29	y	8	10.374	10.818	0.585	0.742	3.58	2.216	1.005	H.1-1
97	M128	RT2X3X0.125	0.337	0	8	0.148	0.847	z	8	10.818	10.818	0.585	0.742	3.58	2.216	1.161	H.1-1
98	M129	RT2X3X0.125	0.243	2.179	8	0.223	11.011	z	8	10.782	10.818	0.585	0.742	3.58	2.216	1.864	H.1-1
99	M130	RT2X3X0.125	0.281	0	8	0.25	0.847	z	8	10.818	10.818	0.585	0.742	3.58	2.216	2.23	H.1-1
100	M131	RT1X1X0.125	0.879	0	8	0.145	0	y	8	2.288	3.982	0.086	0.086	0.852	0.852	2.415	H.1-1
101	M132	RT1X1X0.125	0.728	0	8	0.098	0	y	8	2.099	3.982	0.086	0.086	0.852	0.852	2.787	H.1-1

PRSG20230449

Envelope AA ADM1-15: ASD - BUILDING Member Aluminum Code Checks (Continued)

	Member	Shape	Code Check	Loc[ft]	LC	Shear Check	Loc[ft]	Dir	LC	Pnc/Om[k]	Pnt/Om[k]	Mny/Om[k-ft]	Mnz/Om[k-ft]	Vny/Om[k]	Vnz/Om[k]	Cb	Eqn
102	M133	RT1X1X0.125	0.877	0	8	0.144	0	y	8	2.288	3.982	0.086	0.086	0.852	0.852	2.414	H.1-1
103	M134	RT1X1X0.125	0.75	7.893	8	0.243	0	y	8	2.279	3.982	0.086	0.086	0.852	0.852	2.496	H.1-1
104	M135	RT1X1X0.125	0.749	7.893	8	0.242	0	y	8	2.28	3.982	0.086	0.086	0.852	0.852	2.499	H.1-1
105	M138	RT1X1X0.125	0.222	7.917	8	0.265	7.917	y	8	2.279	3.982	0.086	0.086	0.852	0.852	3.068	H.1-1
106	M139	RT1X1X0.125	0.219	7.916	8	0.263	7.916	y	8	2.28	3.982	0.086	0.086	0.852	0.852	3.033	H.1-1

Node Reactions

	LC	Node Label	X [k]	Y [k]	Z [k]	MX [k-ft]	MY [k-ft]	MZ [k-ft]
0	8	N87	0	1.296	0	0.001	0.001	0
1	8	N51	0	1.286	0	0.001	-0.001	-0.001
2	8	N41	0	0.77	0	0.001	-0.015	-0.002
3	8	N77	0	0.767	0	0	0.015	-0.002
4	8	N31	0.014	0.452	-0.036	0	0	0
5	8	N27	0.063	0.446	-0.012	0	0	0
6	8	N44	-0.056	0.213	-0.012	0	0	0
7	8	N39	-0.046	0.186	-0.053	0	0	0
8	8	N75	-0.045	0.186	0.053	0	0	0
9	8	N7	0.012	0.184	-0.005	0	0	0
10	8	N13	0.011	0.183	0.005	0	0	0
11	8	N118	-0.01	0.181	0.004	0	0	0
12	8	N4	-0.017	0.178	-0.013	0	0	0
13	8	N108	-0.012	0.177	-0.004	0	0	0
14	8	N1	-0.011	0.175	0	0	0	0
15	8	N32	0.027	0.162	0.053	0	0	0
16	8	N145	0.012	0.077	0	0	0	0
17	8	N160	0.012	0.075	0	0	0	0
18	8	N25	-0.012	-0.07	-0.014	0	0	0
19	8	N29	-0.01	-0.066	0.014	0	0	0
20	8	N158	0.006	0.049	0	0	0	0
21	8	N28	0.029	-0.043	0.023	0	0	0
22	8	N70	0.024	0.043	-0.044	0	0	0
23	8	N34	0.023	0.043	0.043	0	0	0
24	8	N159	-0.003	-0.009	0	0	0	0
25	8	N26	-0.007	0.002	0.021	0	0	0
26	8	N30	-0.007	0.002	-0.021	0	0	0
27	8	Totals:	0	6.944	0			
28	8	COG (ft):	X: 28.56	Y: 9.307	Z: 7.292			

Node Reactions

	LC	Node Label	X [k]	Y [k]	Z [k]	MX [k-ft]	MY [k-ft]	MZ [k-ft]
0	14	N87	0	-0.203	0	0	0	0
1	14	N51	0	-0.2	0	0	0	0
2	14	N31	-0.005	-0.116	0.005	0	0	0
3	14	N41	0	-0.115	0	0	0.004	0.001
4	14	N77	0	-0.115	0	0	-0.004	0.001
5	14	N27	-0.02	-0.114	0.003	0	0	0
6	14	N118	0.004	-0.049	-0.001	0	0	0
7	14	N4	0.002	-0.049	0.002	0	0	0
8	14	N7	-0.008	-0.049	0.001	0	0	0
9	14	N13	-0.008	-0.048	-0.001	0	0	0
10	14	N1	0	-0.048	0	0	0	0
11	14	N108	0.004	-0.048	0.001	0	0	0
12	14	N44	0.017	-0.046	0.004	0	0	0
13	14	N32	-0.004	-0.023	-0.009	0	0	0
14	14	N25	0.003	0.022	0.004	0	0	0
15	14	N145	-0.003	-0.021	0	0	0	0
16	14	N160	-0.003	-0.021	0	0	0	0
17	14	N29	0.002	0.02	-0.004	0	0	0
18	14	N28	-0.004	0.02	-0.007	0	0	0
19	14	N34	-0.101	0.015	-0.013	0	0	0
20	14	N70	-0.101	0.015	0.013	0	0	0
21	14	N158	-0.002	-0.014	0	0	0	0
22	14	N39	0.111	-0.005	0.015	0	0	0
23	14	N75	0.11	-0.005	-0.015	0	0	0
24	14	N30	0.002	0.004	0.007	0	0	0
25	14	N26	0.002	0.004	-0.006	0	0	0
26	14	N159	0.001	0.003	0	0	0	0
27	14	Totals:	0	-1.188	0			
28	14	COG (ft):	X: 27.711	Y: 10.416	Z: 7.292			

PRSG20230449