Hydraulic Summary

Job Number: S23-90
Report Description: Light Hazard - Level 1 - Provider - Floor Area

Job

Job Number: S23-90	Design Engineer: Queen
Job Name: CHC Puyallup Cannery	State Certification/License Number: ARCHEI*219DR
Address 1: 201 W. Main St	AHJ: Puyallup
Address 2: Puyallup, WA 98371	Job Site/Building: Cannery
Address 3:	Drawing Name: S23-090 - CHC Puyallup Cannery - 1-8th scale bkup

System

Most Demanding Sprinkler Data: 5.6 K-Factor 20.00 at 12.76	
Hose Allowance At Source: 100.00	
Additional Hose Supplies: Node / Flow(gpm)	
Total Hose Streams: 100.00	
System Flow Demand: 361.93	Total Water Required (Including Hose Allowance): 461.93
Maximum Pressure Unbalance In Loops: 0.00	
Maximum Velocity Above Ground: 20.92 between nodes 111 and 112	
Maximum Velocity Under Ground: 3.75 between nodes 3 and 7	
Volume capacity of Wet Pipes: 1528.43gal	Volume capacity of Dry Pipes:

Remote Area(s)

Occupancy: Light Hazard - Level 1 - Provider - Fl	Job Suffix:
Density: 0.10gpm/ft²	Area of Application: 976.00ft² (Actual 985.06ft²)
Number Of Sprinklers Calculated: 15	Coverage Per Sprinkler: 225.00ft²

WASHINGTON STATE
CERTIFICATE OF COMPETENCY
FIRE PROTECTION SPRINKLER SYSTEMS
Theodore M. Queen
4930-0205-C Level 3
Archer Construction, Inc.
ARCHEI*219DR
11-22-23
Date
Signature
Expires DEC 31, 23

Supplies

Node	Name	Hose Flow (gpm)	Static (psi)	Residual (psi)	@	Flow (gpm)	Available (psi)	@	Total Demand (gpm)	Required (psi)	Safety Margin (psi)
1	Water Supply	100.00	51.00	38.00		2460.00	50.41		461.93	48.96	1.45

Contractor

Contractor Number: 22	Contact Name: / Contact Title:
Name of Contractor: Archer Construction	Phone: / Extension:
Address 1: 7855 South 206th ST	FAX:
Address 2: Kent, WA 98032	E-mail:
Address 3:	Web-Site:

Water Supply at Node 1

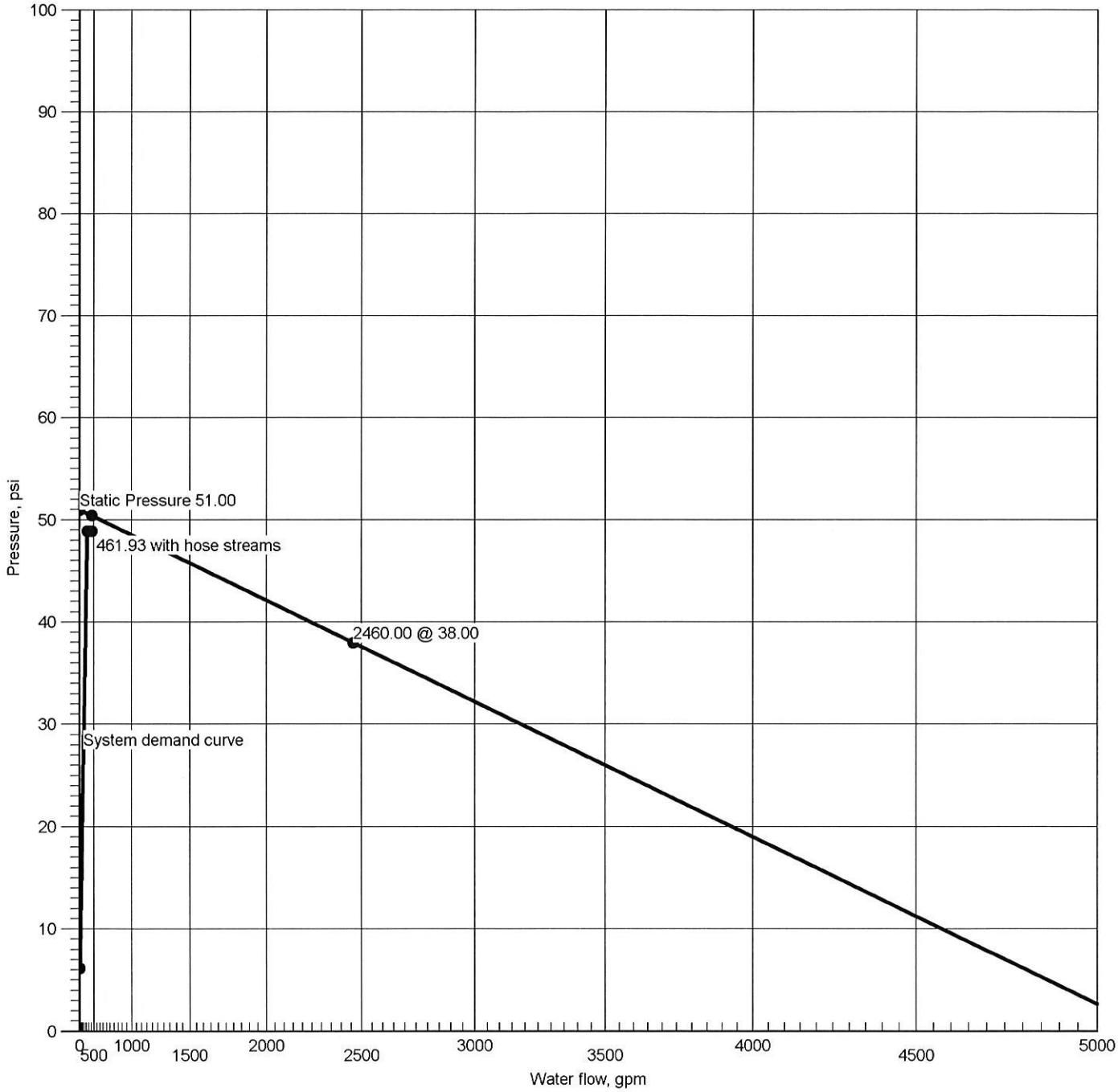

Hydraulic Graph	Water Supply at Node 1
Static: Pressure	51.00
Residual: Pressure	38.00 @ 2460.00
Available Pressure at Time of Test	50.41 @ 461.93
System Demand	48.96 @ 361.93
System Demand (Including Hose Allowance at Source)	48.96 @ 461.93

Summary Of Outflowing Devices

Job Number: S23-90
Report Description: Light Hazard - Level 1 - Provider - Floor Area

Device		Actual Flow (gpm)	Minimum Flow (gpm)	K-Factor (K)	Pressure (psi)		
⇨ **Sprinkler**	**1001**	**20.00**	**20.00**	**5.6**	**12.76**		
Sprinkler	1002	22.23	14.82	5.6	15.75		
Sprinkler	1003	20.76	14.82	5.6	13.75		
Sprinkler	1004	21.29	14.82	5.6	14.45		
Sprinkler	1005	23.14	14.82	5.6	17.07		
Sprinkler	1006	25.35	14.82	5.6	20.49		
Sprinkler	1007	22.54	18.20	5.6	16.20		
Sprinkler	1008	25.12	14.82	5.6	20.12		
Sprinkler	1009	25.47	14.82	5.6	20.69		
Sprinkler	1010	26.39	14.82	5.6	22.21		
Sprinkler	1011	28.35	14.82	5.6	25.63		
Sprinkler	1012	25.69	14.82	5.6	21.04		
Sprinkler	1013	25.74	14.82	5.6	21.13		
Sprinkler	1014	25.94	15.40	5.6	21.46		
Sprinkler	1015	23.91	19.20	5.6	18.23		

⇨ Most Demanding Sprinkler Data

Node Analysis

Job Number: S23-90
Report Description: Light Hazard - Level 1 - Provider - Floor Area

Node	Elevation(Foot)	Fittings	Pressure(psi)	Discharge(gpm)	
1	-4-0	S	48.96	361.93	
1001	8-6	Spr(-12.76), fd(23-0)	12.76	20.00	
1002	10-3	Spr(-15.75)	15.75	22.23	
1003	8-0	Spr(-13.75), fd(23-0)	13.75	20.76	
1004	8-0	Spr(-14.45), fd(34-0)	14.45	21.29	
1005	8-6	Spr(-17.07), fd(23-0)	17.07	23.14	
1006	8-6	Spr(-20.49), fd(23-0)	20.49	25.35	
1007	8-6	Spr(-16.20), fd(23-0)	16.20	22.54	
1008	10-3	Spr(-20.12)	20.12	25.12	
1009	10-3	Spr(-20.69)	20.69	25.47	
1010	10-3	Spr(-22.21)	22.21	26.39	
1011	10-3	Spr(-25.63)	25.63	28.35	
1012	10-3	Spr(-21.04)	21.04	25.69	
1013	10-3	Spr(-21.13)	21.13	25.74	
1014	10-3	Spr(-21.46)	21.46	25.94	
1015	8-6	Spr(-18.23), fd(23-0)	18.23	23.91	
3	-4-0	T(47-3½)	48.92		
7	0-0		43.15		
9	2-0	PO(20-0)	42.22		
84	23-6½	E(7-0)	28.06		
101	19-5½	T(20-0)	29.83		
105	10-6	T(20-0)	33.77		
106	11-11	T(20-0)	34.65		
107	10-3	E(2-0)	16.26		
108	10-3	T(8-0)	16.44		
109	10-3	PO(5-0)	15.64		
110	10-3	PO(5-0)	25.38		
111	9-6½	PO(8-0)	30.33		
112	10-3	PO(8-0)	25.73		
113	10-3	PO(5-0)	21.09		
114	10-3	PO(5-0)	19.18		
115	9-6½	PO(8-0)	30.33		
116	10-3	PO(8-0)	26.01		
117	10-3	PO(5-0)	19.99		
118	9-6½	PO(8-0)	30.47		
119	10-3	PO(5-0)	22.55		
120	10-6	T(20-0)	33.62		
123	19-3½	T(20-0)	29.87		
175	24-4	fE(5-0)	27.68		

Pipe Type / Downstream / Upstream	Diameter / Elevation	Flow / Discharge	Velocity / K-Factor	HWC / Pt	Pn	Friction Loss / Fittings	Length / Eq. Length / Total Length	Pressure Summary
••••• Route 1 •••••								
DY	1.0490	20.00	7.42	120		0.130131	0-0	Pf 3.64
1001	8-6	20.00	5.6	12.76		Sprinkler,	28-0	Pe -0.76
109	10-3			15.64		PO(5-0), fd(23-0)	28-0	Pv
BL	1.6100	20.00	3.15	120		0.016155	7-0½	Pf 0.11
109	10-3			15.64				Pe
1002	10-3			15.75			7-0½	Pv
BL	1.6100	42.23	6.65	120		0.064380	2-9	Pf 0.69
1002	10-3	22.23	5.6	15.75		Sprinkler,	8-0	Pe
108	10-3			16.44		T(8-0)	10-9	Pv
BL	1.6100	62.99	9.93	120		0.134921	8-3	Pf 2.73
108	10-3	20.76		16.44		Flow (q) from Route 4	12-0	Pe
114	10-3			19.18		3E(4-0)	20-3	Pv
BL	1.6100	84.28	13.28	120		0.231213	8-3	Pf 1.91
114	10-3	21.29		19.18		Flow (q) from Route 5		Pe
113	10-3			21.09			8-3	Pv
BL	1.6100	107.42	16.93	120		0.362176	4-10	Pf 4.65
113	10-3	23.14		21.09		Flow (q) from Route 6	8-0	Pe
112	10-3			25.73		PO(8-0)	12-10	Pv
DY	1.6100	132.77	20.92	120		0.535981	0-0	Pf 4.29
112	10-3	25.35		25.73		Flow (q) from Route 7	8-0	Pe 0.31
111	9-6½			30.33		PO(8-0)	8-0	Pv
CM	3.0680	154.42	6.70	120		0.030675	111-10	Pf 3.86
111	9-6½	21.65		30.33		Flow (q) from Route 13	14-0	Pe -0.42
105	10-6			33.77		2E(7-0)	125-10	Pv
CM	4.0260	177.45	4.47	120		0.010562	81-6	Pf 1.49
105	10-6	23.03		33.77		Flow (q) from Route 11	60-0	Pe -0.61
106	11-11			34.65		4E(10-0), T(20-0)	141-6	Pv
CM	4.0260	361.93	9.12	120		0.039479	20-9	Pf 3.27
106	11-11	184.47		34.65		Flow (q) from Route 2	62-0	Pe 4.30
9	2-0			42.22		3E(10-0), BV(12-0), PO(20-0)	82-9	Pv
UG	6.3570	361.93	3.66	120		0.004268	2-10	Pf 0.06
9	2-0			42.22			11-4	Pe 0.87
7	0-0			43.15		LtE(11-4)	14-2	Pv
UG	6.2800	361.93	3.75	140		0.003406	168-7	Pf 4.04
7	0-0			43.15			135-6½	Pe 1.73
3	-4-0			48.92		4E(22-1), BFP(-3.00), T(47-3½)	304-1	Pv
UG	8.3900	361.93	2.10	140		0.000831	50-8½	Pf 0.04
3	-4-0			48.92				Pe
1	-4-0			48.96		Water Supply	50-8½	Pv
		100.00				Hose Allowance At Source		
1		461.93						
••••• Route 2 •••••								
DY	1.0490	22.54	8.37	120		0.162361	0-0	Pf 4.55
1007	8-6	22.54	5.6	16.20		Sprinkler,	28-0	Pe -0.76
117	10-3			19.99		PO(5-0), fd(23-0)	28-0	Pv
BL	1.6100	22.54	3.55	120		0.020157	6-7	Pf 0.13
117	10-3			19.99				Pe
1008	10-3			20.12			6-7	Pv
BL	1.6100	47.66	7.51	120		0.080542	7-1	Pf 0.57
1008	10-3	25.12	5.6	20.12		Sprinkler		Pe
1009	10-3			20.69			7-1	Pv
BL	1.6100	73.14	11.53	120		0.177850	8-6	Pf 1.51
1009	10-3	25.47	5.6	20.69		Sprinkler		Pe
1010	10-3			22.21			8-6	Pv
BL	1.6100	99.52	15.68	120		0.314473	4-1½	Pf 3.81
1010	10-3	26.39	5.6	22.21		Sprinkler,	8-0	Pe
116	10-3			26.01		PO(8-0)	12-1½	Pv
DY	1.6100	127.88	20.15	120		0.500005	0-0	Pf 4.00
116	10-3	28.35		26.01		Flow (q) from Route 10	8-0	Pe 0.31
115	9-6½			30.33		PO(8-0)	8-0	Pv
CM	3.0680	106.23	4.61	120		0.015353	8-11	Pf 0.14
115	9-6½			30.33				Pe
118	9-6½			30.47			8-11	Pv
CM	3.0680	207.51	9.01	120		0.052987	53-5	Pf 3.57
118	9-6½	101.28		30.47		Flow (q) from Route 3	14-0	Pe -0.42
120	10-6			33.62		2E(7-0)	67-5	Pv
CM	4.0260	184.47	4.65	120		0.011347	105-5	Pf 1.65
120	10-6			33.62			40-0	Pe -0.61
106	11-11			34.65		2E(10-0), T(20-0)	145-5	Pv
••••• Route 3 •••••								

Pipe Type / Downstream / Upstream	Diameter / Elevation	Flow / Discharge	Velocity / K-Factor	HWC / Pt	Pn	Friction Loss / Fittings	Length / Eq. Length / Total Length	Pressure Summary
DY	1.0490	23.91	8.88	120		0.181104	0-0	Pf 5.07
1015	8-6	23.91	5.6	18.23		Sprinkler,	28-0	Pe -0.76
119	10-3			22.55		PO(5-0), fd(23-0)	28-0	Pv
BL	1.6100	101.28	15.96	120		0.324814	7-5	Pf 7.61
119	10-3	77.37		22.55		Flow (q) from Route 8	16-0	Pe 0.31
118	9-6½			30.47		2PO(8-0)	23-5	Pv
••••• Route 4 •••••								
DY	1.0490	20.76	7.71	120		0.139482	0-0	Pf 3.49
1003	8-0	20.76	5.6	13.75		Sprinkler,	25-0	Pe -0.98
107	10-3			16.26		E(2-0), fd(23-0)	25-0	Pv
BL	1.6100	20.76	3.27	120		0.017316	2-8	Pf 0.18
107	10-3			16.26			8-0	Pe
108	10-3			16.44		T(8-0)	10-8	Pv
••••• Route 5 •••••								
DY	1.0490	21.29	7.90	120		0.146081	0-0	Pf 5.70
1004	8-0	21.29	5.6	14.45		Sprinkler,	39-0	Pe -0.98
114	10-3			19.18		PO(5-0), fd(34-0)	39-0	Pv
••••• Route 6 •••••								
DY	1.0490	23.14	8.59	120		0.170418	0-0	Pf 4.77
1005	8-6	23.14	5.6	17.07		Sprinkler,	28-0	Pe -0.76
113	10-3			21.09		PO(5-0), fd(23-0)	28-0	Pv
••••• Route 7 •••••								
DY	1.0490	25.35	9.41	120		0.201765	0-0	Pf 5.65
1006	8-6	25.35	5.6	20.49		Sprinkler,	28-0	Pe -0.76
110	10-3			25.38		PO(5-0), fd(23-0)	28-0	Pv
BL	1.6100	25.35	4.00	120		0.025048	5-11	Pf 0.35
110	10-3			25.38			8-0	Pe
112	10-3			25.73		PO(8-0)	13-11	Pv
••••• Route 8 •••••								
BL	1.6100	77.37	12.19	120		0.197357	5-6	Pf 1.09
1014	10-3	51.43	5.6	21.46		Sprinkler, Flow (q) from Route 9		Pe
119	10-3			22.55			5-6	Pv
••••• Route 9 •••••								
BL	1.6100	25.69	4.05	120		0.025671	3-2½	Pf 0.08
1012	10-3	25.69	5.6	21.04		Sprinkler		Pe
1013	10-3			21.13			3-2½	Pv
BL	1.6100	51.43	8.10	120		0.092712	3-7	Pf 0.33
1013	10-3	25.74	5.6	21.13		Sprinkler		Pe
1014	10-3			21.46			3-7	Pv
••••• Route 10 •••••								
BL	1.6100	28.35	4.47	120		0.030810	4-4½	Pf 0.38
1011	10-3	28.35	5.6	25.63		Sprinkler,	8-0	Pe
116	10-3			26.01		PO(8-0)	12-4½	Pv
••••• Route 11 •••••								
CM	4.0260	8.00	0.20	120		0.000034	37-6	Pf 0.00
84	23-6½	8.00		28.06		Flow (q) from Route 12	40-0	Pe 1.77
101	19-5½			29.83		2E(10-0), T(20-0)	77-6	Pv
CM	4.0260	23.03	0.58	120		0.000242	208-11½	Pf 0.06
101	19-5½	15.03		29.83		Flow (q) from Route 14	40-0	Pe 3.88
105	10-6			33.77		2E(10-0), T(20-0)	248-11½	Pv
••••• Route 12 •••••								
CM	4.0260	23.03	0.58	120		0.000242	208-9½	Pf 0.06
120	10-6			33.62		T(20-0)	60-0	Pe -3.81
123	19-3½			29.87		2E(10-0), T(20-0)	268-9½	Pv
CM	4.0260	8.00	0.20	120		0.000034	36-9	Pf 0.00
123	19-3½			29.87			45-0	Pe -2.20
175	24-4			27.68		4E(10-0), fE(5-0)	81-9	Pv
CM	3.0680	8.00	0.35	120		0.000128	151-3½	Pf 0.03
175	24-4			27.68			44-0	Pe 0.35
84	23-6½			28.06		6fE(5-0), 2E(7-0)	195-3½	Pv
••••• Route 13 •••••								
CM	3.0680	21.65	0.94	120		0.000810	7-0	Pf 0.01
115	9-6½			30.33				Pe
111	9-6½			30.33			7-0	Pv
••••• Route 14 •••••								
CM	4.0260	15.03	0.38	120		0.000110	217-8½	Pf 0.03
123	19-3½			29.87			60-0	Pe -0.07
101	19-5½			29.83		4E(10-0), T(20-0)	277-8½	Pv

Pipe Type	Diameter	Flow	Velocity	HWC		Friction Loss	Length	Pressure
Downstream	Elevation	Discharge	K-Factor	Pt	Pn	Fittings	Eq. Length	Summary
Upstream							Total Length	

Equivalent Pipe Lengths of Valves and Fittings (C=120 only)

$$\left(\frac{\text{Actual Inside Diameter}}{\text{Schedule 40 Steel Pipe Inside Diameter}}\right)^{4.87} = \text{Factor}$$

C Value Multiplier

Value Of C	100	130	140	150
Multiplying Factor	0.713	1.16	1.33	1.51

Pipe Type Legend

AO	Arm-Over
BL	Branch Line
CM	Cross Main
DN	Drain
DR	Drop
DY	Dynamic
FM	Feed Main
FR	Feed Riser
MS	Miscellaneous
OR	Outrigger
RN	Riser Nipple
SP	Sprig
ST	Stand Pipe
UG	Underground

Units Legend

Diameter	Inch
Elevation	Foot
Flow	gpm
Discharge	gpm
Velocity	fps
Pressure	psi
Length	Foot
Friction Loss	psi/Foot
HWC	Hazen-Williams Constant
Pt	Total pressure at a point in a pipe
Pn	Normal pressure at a point in a pipe
Pf	Pressure loss due to friction between points
Pe	Pressure due to elevation difference between indicated points
Pv	Velocity pressure at a point in a pipe

Fittings Legend

ALV	Alarm Valve
AngV	Angle Valve
b	Bushing
BalV	Ball Valve
BFP	Backflow Preventer
BV	Butterfly Valve
C	Cross Flow Turn 90°
cplg	Coupling
Cr	Cross Run
CV	Check Valve
DelV	Deluge Valve
DPV	Dry Pipe Valve
E	90° Elbow
EE	45° Elbow
Ee1	11¼° Elbow
Ee2	22½° Elbow
f	Flow Device
fd	Flex Drop
FDC	Fire Department Connection
fE	90° FireLock(TM) Elbow
fEE	45° FireLock(TM) Elbow
flg	Flange
FN	Floating Node
fT	FireLock(TM) Tee
g	Gauge
GloV	Globe Valve
GV	Gate Valve
Ho	Hose
Hose	Hose
HV	Hose Valve
Hyd	Hydrant
LtE	Long Turn Elbow
mecT	Mechanical Tee
Noz	Nozzle
P1	Pump In
P2	Pump Out
PIV	Post Indicating Valve
PO	Pipe Outlet
PRV	Pressure Reducing Valve
PrV	Pressure Relief Valve
red	Reducer/Adapter
S	Supply
sCV	Swing Check Valve
Spr	Sprinkler
St	Strainer
T	Tee Flow Turn 90°
Tr	Tee Run
U	Union
WirF	Wirsbo
WMV	Water Meter Valve
Z	Cap

Hydraulic Summary

Job Number: S23-90
Report Description: Light Hazard - Level 2 - Reception - Floor Area

Job

Job Number: S23-90	Design Engineer: Queen
Job Name: CHC Puyallup Cannery	State Certification/License Number: ARCHEI*219DR
Address 1: 201 W. Main St	AHJ: Puyallup
Address 2: Puyallup, WA 98371	Job Site/Building: Cannery
Address 3:	Drawing Name: S23-090 - CHC Puyallup Cannery - 1-8th scale bkup

System

Most Demanding Sprinkler Data: 4.2 K-Factor 14.21 at 11.45	
Hose Allowance At Source: 100.00	
Additional Hose Supplies: Node / Flow(gpm)	
Total Hose Streams: 100.00	
System Flow Demand: 482.22	Total Water Required (Including Hose Allowance): 582.22
Maximum Pressure Unbalance In Loops: 0.00	
Maximum Velocity Above Ground: 12.15 between nodes 9 and 106	
Maximum Velocity Under Ground: 4.99 between nodes 3 and 7	
Volume capacity of Wet Pipes: 1528.43gal	Volume capacity of Dry Pipes:

Remote Area(s)

Occupancy: Light Hazard - Level 2 - Reception - F	Job Suffix:
Density: 0.07gpm/ft²	Area of Application: 3000.00ft² (Actual 3014.18ft²)
Number Of Sprinklers Calculated: 35	Coverage Per Sprinkler: 225.00ft²

WASHINGTON STATE
CERTIFICATE OF COMPETENCY
FIRE PROTECTION SPRINKLER SYSTEMS
Theodore M. Queen
4930-0205-C Level 3
Archer Construction, Inc.
ARCHEI*219DR
11-22-23
Date
Signature
Expires DEC 31, 23

Supplies

Node	Name	Hose Flow (gpm)	Static (psi)	Residual (psi)	@	Flow (gpm)	Available (psi)	@	Total Demand (gpm)	Required (psi)	Safety Margin (psi)
1	Water Supply	100.00	51.00	38.00		2460.00	50.10		582.22	49.97	0.13

Contractor

Contractor Number: 22	Contact Name: / Contact Title:
Name of Contractor: Archer Construction	Phone: / Extension:
Address 1: 7855 South 206th ST	FAX:
Address 2: Kent, WA 98032	E-mail:
Address 3:	Web-Site:

Water Supply at Node 1

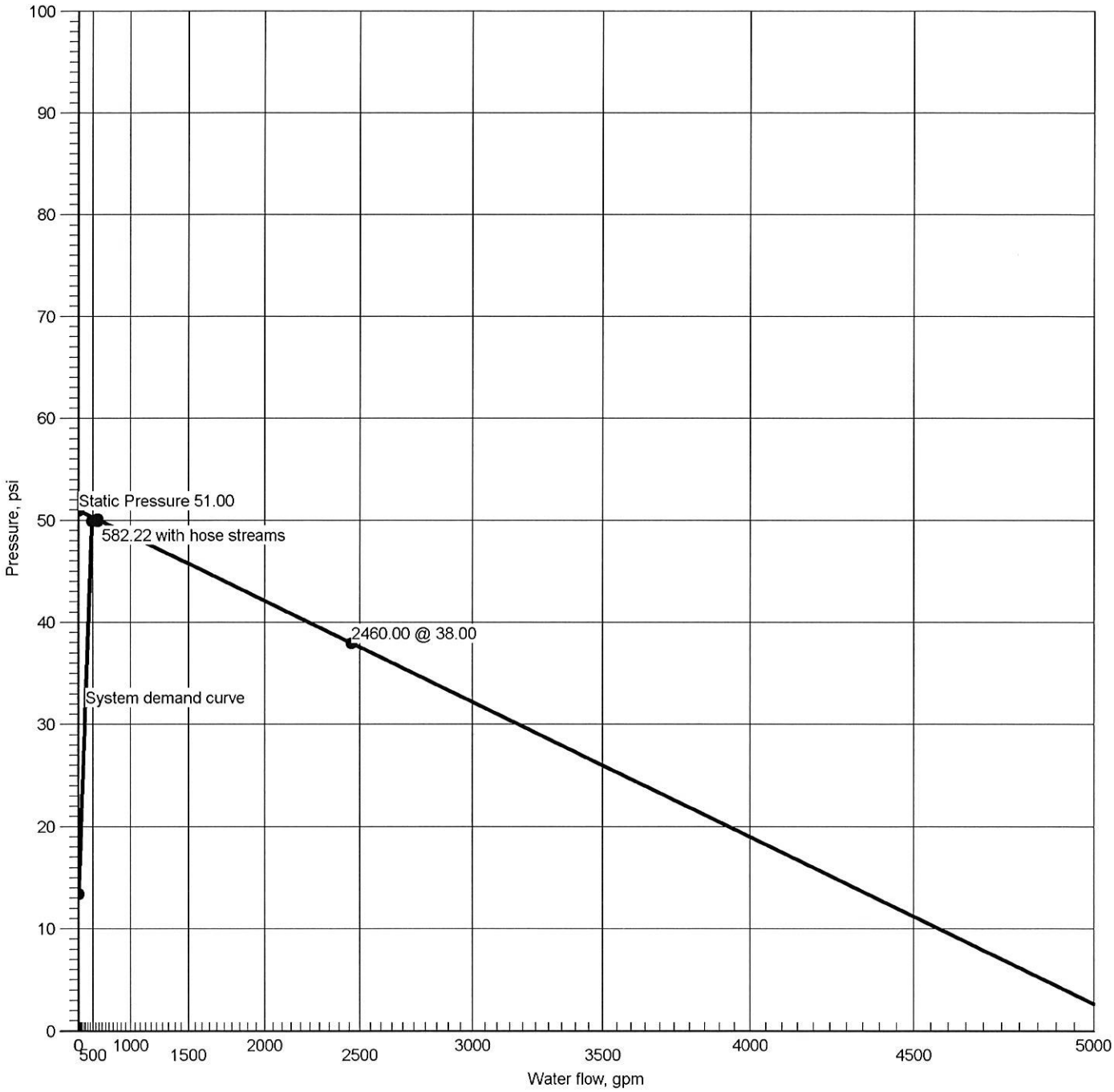

Hydraulic Graph	Water Supply at Node 1
Static: Pressure	51.00
Residual: Pressure	38.00 @ 2460.00
Available Pressure at Time of Test	50.10 @ 582.22
System Demand	49.97 @ 482.22
System Demand (Including Hose Allowance at Source)	49.97 @ 582.22

Summary Of Outflowing Devices

Job Number: S23-90
Report Description: Light Hazard - Level 2 - Reception - Floor Area

Device		Actual Flow (gpm)	Minimum Flow (gpm)	K-Factor (K)	Pressure (psi)		
Sprinkler	2001	14.37	10.90	4.2	11.70		
Sprinkler	2002	14.39	11.11	4.2	11.73		
Sprinkler	2003	14.08	11.11	4.2	11.24		
Sprinkler	2004	14.35	11.11	4.2	11.67		
Sprinkler	2005	14.63	11.11	4.2	12.14		
Sprinkler	2006	14.34	11.11	4.2	11.66		
Sprinkler	2007	13.81	11.11	4.2	10.80		
Sprinkler	2008	13.54	11.11	4.2	10.39		
Sprinkler	2009	13.84	11.11	4.2	10.85		
Sprinkler	2010	14.22	14.21	4.2	11.46		
Sprinkler	2011	13.24	11.11	4.2	9.94		
Sprinkler	2012	12.93	11.11	4.2	9.47		
Sprinkler	2013	13.01	11.11	4.2	9.60		
Sprinkler	2014	13.33	11.11	4.2	10.07		
Sprinkler	2015	13.09	11.11	4.2	9.72		
Sprinkler	2016	12.86	11.11	4.2	9.37		
Sprinkler	2017	12.91	11.11	4.2	9.45		
Sprinkler	2018	13.23	11.11	4.2	9.92		
⇨ **Sprinkler**	**2019**	**14.21**	**14.21**	**4.2**	**11.45**		
Sprinkler	2020	13.57	11.11	4.2	10.44		
Sprinkler	2021	13.33	11.11	4.2	10.07		
Sprinkler	2022	13.00	11.11	4.2	9.58		
Sprinkler	2023	13.31	11.11	4.2	10.05		
Sprinkler	2024	13.81	11.11	4.2	10.80		
Sprinkler	2025	13.85	11.11	4.2	10.87		
Sprinkler	2026	14.34	11.11	4.2	11.66		
Sprinkler	2027	13.87	11.11	4.2	10.91		
Sprinkler	2028	13.92	11.11	4.2	10.98		
Sprinkler	2029	13.96	13.72	4.2	11.04		
Sprinkler	2030	13.82	11.11	4.2	10.82		
Sprinkler	2031	13.69	11.11	4.2	10.63		
Sprinkler	2032	14.40	11.11	4.2	11.75		
Sprinkler	2033	14.44	11.11	4.2	11.82		
Sprinkler	2034	14.12	11.11	4.2	11.30		
Sprinkler	2035	14.44	11.11	4.2	11.83		

⇨ Most Demanding Sprinkler Data

Node Analysis

Job Number: S23-90
Report Description: Light Hazard - Level 2 - Reception - Floor Area

Node	Elevation(Foot)	Fittings	Pressure(psi)	Discharge(gpm)	
1	-4-0	S	49.97	482.22	
2001	23-2	Spr(-11.70), fd(23-0)	11.70	14.37	
2002	23-2	Spr(-11.73), fd(23-0)	11.73	14.39	
2003	22-8	Spr(-11.24), fd(34-0)	11.24	14.08	
2004	23-2	Spr(-11.67), fd(23-0)	11.67	14.35	
2005	25-8½	Spr(-12.14)	12.14	14.63	
2006	27-0	Spr(-11.66)	11.66	14.34	
2007	22-8	Spr(-10.80), fd(23-0)	10.80	13.81	
2008	26-5	Spr(-10.39)	10.39	13.54	
2009	25-2½	Spr(-10.85)	10.85	13.84	
2010	23-2	Spr(-11.46), fd(23-0)	11.46	14.22	
2011	22-8	Spr(-9.94), fd(34-0)	9.94	13.24	
2012	22-8	Spr(-9.47), fd(34-0)	9.47	12.93	
2013	26-3	Spr(-9.60)	9.60	13.01	
2014	25-0	Spr(-10.07)	10.07	13.33	
2015	22-8	Spr(-9.72), fd(34-0)	9.72	13.09	
2016	22-8	Spr(-9.37), fd(34-0)	9.37	12.86	
2017	26-3	Spr(-9.45)	9.45	12.91	
2018	25-0	Spr(-9.92)	9.92	13.23	
2019	23-2	Spr(-11.45), fd(23-0)	11.45	14.21	
2020	22-8	Spr(-10.44), fd(23-0)	10.44	13.57	
2021	22-8	Spr(-10.07), fd(23-0)	10.07	13.33	
2022	26-3	Spr(-9.58)	9.58	13.00	
2023	25-0	Spr(-10.05)	10.05	13.31	
2024	24-3	Spr(-10.80), fd(23-0)	10.80	13.81	
2025	24-3	Spr(-10.87), fd(23-0)	10.87	13.85	
2026	22-8	Spr(-11.66), fd(23-0)	11.66	14.34	
2027	24-3	Spr(-10.91), fd(23-0)	10.91	13.87	
2028	24-3	Spr(-10.98), fd(23-0)	10.98	13.92	
2029	22-8	Spr(-11.04), fd(23-0)	11.04	13.96	
2030	22-8	Spr(-10.82), fd(23-0)	10.82	13.82	
2031	22-8	Spr(-10.63), fd(23-0)	10.63	13.69	
2032	23-2	Spr(-11.75), fd(23-0)	11.75	14.40	
2033	23-2	Spr(-11.82), fd(23-0)	11.82	14.44	
2034	22-8	Spr(-11.30), fd(34-0)	11.30	14.12	
2035	22-8	Spr(-11.83), fd(23-0)	11.83	14.44	
3	-4-0	T(47-3½)	49.90		
7	0-0		43.40		
9	2-0	PO(20-0)	42.43		
84	23-6½	E(7-0)	18.55		
101	19-5½	T(20-0)	21.98		
105	10-6	T(20-0)	30.52		
106	11-11	T(20-0)	32.58		
120	10-6	T(20-0)	30.52		
123	19-3½	T(20-0)	22.10		
175	24-4	fE(5-0)	18.35		
200	26-1½	PO(5-0)	12.39		
201	26-9	PO(5-0)	12.15		
202	24-4	PO(8-0)	13.79		
203	24-4	PO(8-0)	13.64		
204	24-11½	PO(5-0)	12.90		
205	24-11½	PO(5-0)	12.87		
206	24-4	PO(8-0)	13.36		
207	24-4	PO(8-0)	13.32		
208	24-11½	PO(5-0)	11.65		
209	24-4	PO(8-0)	13.10		
210	24-11½	PO(5-0)	11.32		
211	24-11½	PO(5-0)	10.75		
212	26-1½	PO(5-0)	12.12		
213	24-4	PO(8-0)	13.09		
214	24-4	PO(8-0)	13.05		
215	24-11½	PO(5-0)	11.05		

Node	Elevation(Foot)	Fittings	Pressure(psi)	Discharge(gpm)	
216	24-11½	PO(5-0)	10.63		
217	24-11½	PO(5-0)	12.60		
218	24-4	PO(8-0)	13.04		
219	24-4	PO(8-0)	13.04		
220	24-11½	PO(5-0)	11.23		
221	24-11½	PO(5-0)	10.80		
222	24-11½	PO(5-0)	12.32		
223	24-11½	PO(5-0)	12.41		
224	24-4	PO(8-0)	13.07		
225	24-4	PO(8-0)	13.09		
226	24-11½	PO(5-0)	12.63		
227	24-4	PO(8-0)	13.14		
228	24-11½	PO(5-0)	11.92		
229	24-11½	PO(5-0)	11.66		
230	24-11½	PO(5-0)	12.45		
231	24-11½	PO(5-0)	12.53		
232	24-4	PO(8-0)	13.17		
233	25-11	PO(5-0)	11.02		
234	24-4	PO(8-0)	13.77		
235	24-11½	PO(5-0)	12.98		
236	24-11½	PO(5-0)	12.83		
237	24-11½	PO(5-0)	12.95		
238	24-11½	PO(5-0)	13.03		
239	24-4	PO(8-0)	13.80		

Pipe Type / Downstream / Upstream	Diameter / Elevation	Flow / Discharge	Velocity / K-Factor	HWC / Pt	Pn	Friction Loss / Fittings	Length / Eq. Length / Total Length	Pressure Summary
••••• Route 1 •••••								
DY	1.0490	14.21	5.28	120		0.069147	0-0	Pf 1.94
2019	23-2	14.21	4.2	11.45		Sprinkler,	28-0	Pe -0.78
217	24-11½			12.60		PO(5-0), fd(23-0)	28-0	Pv
BL	1.6100	14.21	2.24	120		0.008584	9-3½	Pf 0.17
217	24-11½			12.60			10-0	Pe 0.28
218	24-4			13.04		LtE(2-0), PO(8-0)	19-3½	Pv
CM	3.0680	0.44	0.02	120		0.000001	1-6½	Pf 0.00
218	24-4			13.04				Pe
219	24-4			13.04			1-6½	Pv
CM	3.0680	53.65	2.33	120		0.004339	6-5½	Pf 0.03
219	24-4	53.21		13.04		Flow (q) from Route 7		Pe
224	24-4			13.07			6-5½	Pv
CM	3.0680	81.31	3.53	120		0.009362	1-8	Pf 0.02
224	24-4	27.65		13.07		Flow (q) from Route 19		Pe
225	24-4			13.09			1-8	Pv
CM	3.0680	95.64	4.15	120		0.012644	4-1	Pf 0.05
225	24-4	14.34		13.09		Flow (q) from Route 27		Pe
227	24-4			13.14			4-1	Pv
CM	3.0680	137.11	5.95	120		0.024617	1-2	Pf 0.03
227	24-4	41.46		13.14		Flow (q) from Route 3		Pe
232	24-4			13.17			1-2	Pv
CM	3.0680	164.90	7.16	120		0.034635	7-3½	Pf 0.60
232	24-4	27.79		13.17		Flow (q) from Route 23	10-0	Pe 0.00
234	24-4			13.77		2fE(5-0)	17-3½	Pv
CM	3.0680	193.46	8.40	120		0.046545	0-9	Pf 0.04
234	24-4	28.57		13.77		Flow (q) from Route 26		Pe
239	24-4			13.80			0-9	Pv
CM	3.0680	222.30	9.65	120		0.060188	50-9½	Pf 4.56
239	24-4	28.84		13.80		Flow (q) from Route 32	25-0	Pe -0.01
175	24-4			18.35		5fE(5-0)	75-9½	Pv
CM	4.0260	222.30	5.60	120		0.016024	36-9	Pf 1.55
175	24-4			18.35			60-0	Pe 2.20
123	19-3½			22.10		4E(10-0), T(20-0)	96-9	Pv
CM	4.0260	240.49	6.06	120		0.018533	208-9½	Pf 4.61
123	19-3½	18.19		22.10		Flow (q) from Route 37	40-0	Pe 3.81
120	10-6			30.52		2E(10-0), T(20-0)	248-9½	Pv
CM	4.0260	239.35	6.03	120		0.018371	105-5	Pf 2.67
120	10-6			30.52			40-0	Pe -0.61
106	11-11			32.58		2E(10-0), T(20-0)	145-5	Pv
CM	4.0260	482.22	12.15	120		0.067131	20-9	Pf 5.56
106	11-11	242.87		32.58		Flow (q) from Route 2	62-0	Pe 4.30
9	2-0			42.43		3E(10-0), BV(12-0), PO(20-0)	82-9	Pv
UG	6.3570	482.22	4.87	120		0.007258	2-10	Pf 0.10
9	2-0			42.43			11-4	Pe 0.87
7	0-0			43.40		LtE(11-4)	14-2	Pv
UG	6.2800	482.22	4.99	140		0.005791	168-7	Pf 4.76
7	0-0			43.40			135-6½	Pe 1.73
3	-4-0			49.90		4E(22-1), BFP(-3.00), T(47-3½)	304-1	Pv
UG	8.3900	482.22	2.80	140		0.001413	50-8½	Pf 0.07
3	-4-0			49.90				Pe
1	-4-0			49.97		Water Supply	50-8½	Pv
		100.00				Hose Allowance At Source		
1		582.22						
••••• Route 2 •••••								
DY	1.0490	14.22	5.28	120		0.069213	0-0	Pf 1.94
2010	23-2	14.22	4.2	11.46		Sprinkler,	28-0	Pe -1.28
212	26-1½			12.12		PO(5-0), fd(23-0)	28-0	Pv
BL	1.6100	14.22	2.24	120		0.008593	12-8	Pf 0.19
212	26-1½			12.12			10-0	Pe 0.77
213	24-4			13.09		LtE(2-0), PO(8-0)	22-8	Pv
CM	3.0680	80.08	3.48	120		0.009103	1-5½	Pf 0.01
213	24-4	65.86		13.09		Flow (q) from Route 4		Pe
209	24-4			13.10			1-5½	Pv
CM	3.0680	132.58	5.75	120		0.023135	9-7	Pf 0.22
209	24-4	52.50		13.10		Flow (q) from Route 6		Pe
207	24-4			13.32			9-7	Pv
CM	3.0680	173.76	7.54	120		0.038159	0-11½	Pf 0.04
207	24-4	41.18		13.32		Flow (q) from Route 15		Pe
206	24-4			13.36			0-11½	Pv

Pipe Type / Downstream / Upstream	Diameter / Elevation	Flow / Discharge	Velocity / K-Factor	HWC / Pt	Pn	Friction Loss / Fittings	Length / Eq. Length / Total Length	Pressure Summary
CM	3.0680	202.74	8.80	120		0.050756	5-6½	Pf 0.28
206	24-4	28.97		13.36		Flow (q) from Route 28		Pe
203	24-4			13.64			5-6½	Pv
CM	3.0680	231.17	10.03	120		0.064705	2-4	Pf 0.15
203	24-4	28.43		13.64		Flow (q) from Route 25		Pe
202	24-4			13.79			2-4	Pv
CM	3.0680	259.92	11.28	120		0.080376	40-11½	Pf 4.42
202	24-4	28.75		13.79		Flow (q) from Route 30	14-0	Pe 0.34
84	23-6½			18.55		2E(7-0)	54-11½	Pv
CM	4.0260	259.92	6.55	120		0.021398	37-6	Pf 1.66
84	23-6½			18.55			40-0	Pe 1.77
101	19-5½			21.98		2E(10-0), T(20-0)	77-6	Pv
CM	4.0260	241.73	6.09	120		0.018710	208-11½	Pf 4.66
101	19-5½			21.98			40-0	Pe 3.88
105	10-6			30.52		2E(10-0), T(20-0)	248-11½	Pv
CM	4.0260	242.87	6.12	120		0.018874	81-6	Pf 2.67
105	10-6	1.14		30.52		Flow (q) from Route 36	60-0	Pe -0.61
106	11-11			32.58		4E(10-0), T(20-0)	141-6	Pv
••••• Route 3 •••••								
DY	1.0490	13.96	5.18	120		0.066891	0-0	Pf 1.87
2029	22-8	13.96	4.2	11.04		Sprinkler,	28-0	Pe -0.99
228	24-11½			11.92		PO(5-0), fd(23-0)	28-0	Pv
BL	1.6100	41.46	6.53	120		0.062247	5-2	Pf 0.94
228	24-11½	27.51		11.92		Flow (q) from Route 17	10-0	Pe 0.27
227	24-4			13.14		LtE(2-0), PO(8-0)	15-2	Pv
••••• Route 4 •••••								
DY	1.0490	12.86	4.77	120		0.057477	0-0	Pf 2.24
2016	22-8	12.86	4.2	9.37		Sprinkler,	39-0	Pe -0.98
216	24-11½			10.63		PO(5-0), fd(34-0)	39-0	Pv
BL	1.6100	39.00	6.15	120		0.055572	7-6½	Pf 0.42
216	24-11½	26.14		10.63		Flow (q) from Route 5		Pe
215	24-11½			11.05			7-6½	Pv
BL	1.6100	52.09	8.21	120		0.094935	6-3	Pf 1.73
215	24-11½	13.09		11.05		Flow (q) from Route 9	12-0	Pe 0.26
214	24-4			13.05		E(4-0), PO(8-0)	18-3	Pv
CM	3.0680	65.86	2.86	120		0.006341	6-2½	Pf 0.04
214	24-4	13.77		13.05		Flow (q) from Route 38		Pe
213	24-4			13.09			6-2½	Pv
••••• Route 5 •••••								
BL	1.6100	26.14	4.12	120		0.026511	11-3	Pf 0.62
2017	26-3	13.23	4.2	9.45		Sprinkler,, Flow (q) from Route	12-0	Pe 0.56
216	24-11½			10.63		10	23-3	Pv
						3E(4-0)		
••••• Route 6 •••••								
DY	1.0490	12.93	4.80	120		0.058045	0-0	Pf 2.26
2012	22-8	12.93	4.2	9.47		Sprinkler,	39-0	Pe -0.99
211	24-11½			10.75		PO(5-0), fd(34-0)	39-0	Pv
BL	1.6100	39.26	6.19	120		0.056274	10-0½	Pf 0.57
211	24-11½	26.34		10.75		Flow (q) from Route 8		Pe 0.01
210	24-11½			11.32			10-0½	Pv
BL	1.6100	52.50	8.27	120		0.096331	3-9	Pf 1.52
210	24-11½	13.24		11.32		Flow (q) from Route 11	12-0	Pe 0.26
209	24-4			13.10		E(4-0), PO(8-0)	15-9	Pv
••••• Route 7 •••••								
BL	1.6100	26.31	4.15	120		0.026838	12-6	Pf 0.66
2022	26-3	13.31	4.2	9.58		Sprinkler,, Flow (q) from Route	12-0	Pe 0.56
221	24-11½			10.80		12	24-6	Pv
						3E(4-0)		
BL	1.6100	39.64	6.25	120		0.057274	7-6½	Pf 0.43
221	24-11½	13.33		10.80		Flow (q) from Route 13		Pe -0.00
220	24-11½			11.23			7-6½	Pv
BL	1.6100	53.21	8.39	120		0.098745	5-8	Pf 1.55
220	24-11½	13.57		11.23		Flow (q) from Route 16	10-0	Pe 0.27
219	24-4			13.04		LtE(2-0), PO(8-0)	15-8	Pv
••••• Route 8 •••••								
BL	1.6100	26.34	4.15	120		0.026882	10-0	Pf 0.59
2013	26-3	13.33	4.2	9.60		Sprinkler,, Flow (q) from Route	12-0	Pe 0.56
211	24-11½			10.75		14	22-0	Pv
						3E(4-0)		
••••• Route 9 •••••								
DY	1.0490	13.09	4.86	120		0.059425	0-0	Pf 2.32
2015	22-8	13.09	4.2	9.72		Sprinkler,	39-0	Pe -0.98
215	24-11½			11.05		PO(5-0), fd(34-0)	39-0	Pv

Pipe Type / Downstream / Upstream	Diameter / Elevation	Flow / Discharge	Velocity / K-Factor	HWC / Pt	Pn	Friction Loss / Fittings	Length / Eq. Length / Total Length	Pressure Summary
••••• Route 10 •••••								
BL	1.6100	13.23	2.08	120		0.007520	8-1	Pf 0.06
2018	25-0	13.23	4.2	9.92		Sprinkler		Pe -0.53
2017	26-3			9.45			8-1	Pv
••••• Route 11 •••••								
DY	1.0490	13.24	4.91	120		0.060667	0-0	Pf 2.37
2011	22-8	13.24	4.2	9.94		Sprinkler,	39-0	Pe -0.99
210	24-11½			11.32		PO(5-0), fd(34-0)	39-0	Pv
••••• Route 12 •••••								
BL	1.6100	13.31	2.10	120		0.007611	8-1	Pf 0.06
2023	25-0	13.31	4.2	10.05		Sprinkler		Pe -0.53
2022	26-3			9.58			8-1	Pv
••••• Route 13 •••••								
DY	1.0490	13.33	4.95	120		0.061400	0-0	Pf 1.72
2021	22-8	13.33	4.2	10.07		Sprinkler,	28-0	Pe -0.99
221	24-11½			10.80		PO(5-0), fd(23-0)	28-0	Pv
••••• Route 14 •••••								
BL	1.6100	13.33	2.10	120		0.007623	8-1	Pf 0.06
2014	25-0	13.33	4.2	10.07		Sprinkler		Pe -0.53
2013	26-3			9.60			8-1	Pv
••••• Route 15 •••••								
BL	1.6100	27.38	4.31	120		0.028875	9-5½	Pf 0.62
2008	26-5	13.84	4.2	10.39		Sprinkler,, Flow (q) from Route	12-0	Pe 0.64
208	24-11½			11.65		21	21-5½	Pv
						3E(4-0)		
BL	1.6100	41.18	6.49	120		0.061461	12-10	Pf 1.40
208	24-11½	13.81		11.65		Flow (q) from Route 18	10-0	Pe 0.27
207	24-4			13.32		LtE(2-0), PO(8-0)	22-10	Pv
••••• Route 16 •••••								
DY	1.0490	13.57	5.04	120		0.063506	0-0	Pf 1.78
2020	22-8	13.57	4.2	10.44		Sprinkler,	28-0	Pe -0.99
220	24-11½			11.23		PO(5-0), fd(23-0)	28-0	Pv
••••• Route 17 •••••								
DY	1.0490	13.69	5.08	120		0.064555	0-0	Pf 1.81
2031	22-8	13.69	4.2	10.63		Sprinkler,	28-0	Pe -1.41
233	25-11			11.02		PO(5-0), fd(23-0)	28-0	Pv
BL	1.6100	13.69	2.16	120		0.008014	15-11	Pf 0.22
233	25-11			11.02			12-0	Pe 0.42
229	24-11½			11.66		3E(4-0)	27-11	Pv
BL	1.6100	27.51	4.33	120		0.029134	8-10½	Pf 0.26
229	24-11½	13.82		11.66		Flow (q) from Route 20		Pe
228	24-11½			11.92			8-10½	Pv
••••• Route 18 •••••								
DY	1.0490	13.81	5.13	120		0.065551	0-0	Pf 1.84
2007	22-8	13.81	4.2	10.80		Sprinkler,	28-0	Pe -0.99
208	24-11½			11.65		PO(5-0), fd(23-0)	28-0	Pv
••••• Route 19 •••••								
DY	1.0490	13.81	5.13	120		0.065551	0-0	Pf 1.84
2024	24-3	13.81	4.2	10.80		Sprinkler,	28-0	Pe -0.32
222	24-11½			12.32		PO(5-0), fd(23-0)	28-0	Pv
BL	1.6100	13.81	2.18	120		0.008138	9-8½	Pf 0.08
222	24-11½			12.32				Pe 0.01
223	24-11½			12.41			9-8½	Pv
BL	1.6100	27.65	4.36	120		0.029423	3-2	Pf 0.39
223	24-11½	13.85		12.41		Flow (q) from Route 22	10-0	Pe 0.27
224	24-4			13.07		LtE(2-0), PO(8-0)	13-2	Pv
••••• Route 20 •••••								
DY	1.0490	13.82	5.13	120		0.065640	0-0	Pf 1.84
2030	22-8	13.82	4.2	10.82		Sprinkler,	28-0	Pe -0.99
229	24-11½			11.66		PO(5-0), fd(23-0)	28-0	Pv
••••• Route 21 •••••								
BL	1.6100	13.84	2.18	120		0.008172	8-0½	Pf 0.07
2009	25-2½	13.84	4.2	10.85		Sprinkler		Pe -0.53
2008	26-5			10.39			8-0½	Pv
••••• Route 22 •••••								
DY	1.0490	13.85	5.14	120		0.065935	0-0	Pf 1.85
2025	24-3	13.85	4.2	10.87		Sprinkler,	28-0	Pe -0.31
223	24-11½			12.41		PO(5-0), fd(23-0)	28-0	Pv
••••• Route 23 •••••								
DY	1.0490	13.87	5.15	120		0.066136	0-0	Pf 1.85
2027	24-3	13.87	4.2	10.91		Sprinkler,	28-0	Pe -0.31
230	24-11½			12.45		PO(5-0), fd(23-0)	28-0	Pv

Pipe Type / Downstream / Upstream	Diameter / Elevation	Flow / Discharge	Velocity / K-Factor	HWC / Pt	Pn	Friction Loss / Fittings	Length / Eq. Length / Total Length	Pressure Summary
BL	1.6100	13.87	2.19	120		0.008211	9-8	Pf 0.08
230	24-11½			12.45				Pe 0.01
231	24-11½			12.53			9-8	Pv
BL	1.6100	27.79	4.38	120		0.029685	2-2½	Pf 0.36
231	24-11½	13.92		12.53		Flow (q) from Route 24	10-0	Pe 0.27
232	24-4			13.17		LtE(2-0), PO(8-0)	12-2½	Pv
••••• Route 24 •••••								
DY	1.0490	13.92	5.17	120		0.066520	0-0	Pf 1.86
2028	24-3	13.92	4.2	10.98		Sprinkler,	28-0	Pe -0.31
231	24-11½			12.53		PO(5-0), fd(23-0)	28-0	Pv
••••• Route 25 •••••								
DY	1.0490	14.08	5.23	120		0.068016	0-0	Pf 2.65
2003	22-8	14.08	4.2	11.24		Sprinkler,	39-0	Pe -0.99
204	24-11½			12.90		PO(5-0), fd(34-0)	39-0	Pv
BL	1.6100	28.43	4.48	120		0.030975	4-11½	Pf 0.46
204	24-11½	14.35		12.90		Flow (q) from Route 29	10-0	Pe 0.27
203	24-4			13.64		LtE(2-0), PO(8-0)	14-11½	Pv
••••• Route 26 •••••								
DY	1.0490	14.12	5.24	120		0.068347	0-0	Pf 2.67
2034	22-8	14.12	4.2	11.30		Sprinkler,	39-0	Pe -0.99
235	24-11½			12.98		PO(5-0), fd(34-0)	39-0	Pv
BL	1.6100	28.57	4.50	120		0.031241	6-7½	Pf 0.52
235	24-11½	14.44		12.98		Flow (q) from Route 34	10-0	Pe 0.27
234	24-4			13.77		LtE(2-0), PO(8-0)	16-7½	Pv
••••• Route 27 •••••								
DY	1.0490	14.34	5.32	120		0.070314	0-0	Pf 1.97
2026	22-8	14.34	4.2	11.66		Sprinkler,	28-0	Pe -0.99
226	24-11½			12.63		PO(5-0), fd(23-0)	28-0	Pv
BL	1.6100	14.34	2.26	120		0.008729	11-1½	Pf 0.18
226	24-11½			12.63			10-0	Pe 0.27
225	24-4			13.09		LtE(2-0), PO(8-0)	21-1½	Pv
••••• Route 28 •••••								
BL	1.6100	28.97	4.57	120		0.032067	7-0	Pf 0.54
2006	27-0	14.63	4.2	11.66		Sprinkler,, Flow (q) from Route	10-0	Pe 1.16
206	24-4			13.36		35	17-0	Pv
						LtE(2-0), PO(8-0)		
••••• Route 29 •••••								
DY	1.0490	14.35	5.33	120		0.070416	0-0	Pf 1.97
2004	23-2	14.35	4.2	11.67		Sprinkler,	28-0	Pe -0.78
205	24-11½			12.87		PO(5-0), fd(23-0)	28-0	Pv
BL	1.6100	14.35	2.26	120		0.008742	3-11½	Pf 0.03
205	24-11½			12.87				Pe
204	24-11½			12.90			3-11½	Pv
••••• Route 30 •••••								
DY	1.0490	14.37	5.33	120		0.070560	0-0	Pf 1.98
2001	23-2	14.37	4.2	11.70		Sprinkler,	28-0	Pe -1.28
200	26-1½			12.39		PO(5-0), fd(23-0)	28-0	Pv
BL	1.6100	14.37	2.26	120		0.008760	4-1½	Pf 0.04
200	26-1½			12.39				Pe -0.28
201	26-9			12.15			4-1½	Pv
BL	1.6100	28.75	4.53	120		0.031618	8-5½	Pf 0.58
201	26-9	14.39		12.15		Flow (q) from Route 31	10-0	Pe 1.06
202	24-4			13.79		LtE(2-0), PO(8-0)	18-5½	Pv
••••• Route 31 •••••								
DY	1.0490	14.39	5.34	120		0.070734	0-0	Pf 1.98
2002	23-2	14.39	4.2	11.73		Sprinkler,	28-0	Pe -1.56
201	26-9			12.15		PO(5-0), fd(23-0)	28-0	Pv
••••• Route 32 •••••								
DY	1.0490	14.40	5.34	120		0.070849	0-0	Pf 1.98
2032	23-2	14.40	4.2	11.75		Sprinkler,	28-0	Pe -0.79
237	24-11½			12.95		PO(5-0), fd(23-0)	28-0	Pv
BL	1.6100	14.40	2.27	120		0.008796	8-11½	Pf 0.08
237	24-11½			12.95				Pe
238	24-11½			13.03			8-11½	Pv
BL	1.6100	28.84	4.54	120		0.031794	3-5½	Pf 0.49
238	24-11½	14.44		13.03		Flow (q) from Route 33	12-0	Pe 0.28
239	24-4			13.80		E(4-0), PO(8-0)	15-5½	Pv
••••• Route 33 •••••								
DY	1.0490	14.44	5.36	120		0.071230	0-0	Pf 1.99
2033	23-2	14.44	4.2	11.82		Sprinkler,	28-0	Pe -0.79
238	24-11½			13.03		PO(5-0), fd(23-0)	28-0	Pv
••••• Route 34 •••••								

Pipe Type / Downstream / Upstream	Diameter / Elevation	Flow / Discharge	Velocity / K-Factor	HWC / Pt	Pn	Friction Loss / Fittings	Length / Eq. Length / Total Length	Pressure Summary	
DY	1.0490	14.44	5.36	120		0.071276	0-0	Pf	2.00
2035	22-8	14.44	4.2	11.83		Sprinkler,	28-0	Pe	-0.99
236	24-11½			12.83		PO(5-0), fd(23-0)	28-0	Pv	
BL	1.6100	14.44	2.28	120		0.008849	12-5	Pf	0.15
236	24-11½			12.83			4-0	Pe	
235	24-11½			12.98		E(4-0)	16-5	Pv	
••••• Route 35 •••••									
BL	1.6100	14.63	2.31	120		0.009062	8-2	Pf	0.07
2005	25-8½	14.63	4.2	12.14		Sprinkler		Pe	-0.55
2006	27-0			11.66			8-2	Pv	
••••• Route 36 •••••									
CM	3.0680	1.14	0.05	120		0.000003	181-2	Pf	0.00
120	10-6			30.52			28-0	Pe	
105	10-6			30.52		4E(7-0)	209-2	Pv	
••••• Route 37 •••••									
CM	4.0260	18.19	0.46	120		0.000156	217-8½	Pf	0.05
101	19-5½			21.98		T(20-0)	80-0	Pe	0.07
123	19-3½			22.10		4E(10-0), T(20-0)	297-8½	Pv	
••••• Route 38 •••••									
CM	3.0680	13.77	0.60	120		0.000351	10-5½	Pf	0.00
218	24-4			13.04				Pe	
214	24-4			13.05			10-5½	Pv	

Equivalent Pipe Lengths of Valves and Fittings (C=120 only)

$$\left(\frac{\text{Actual Inside Diameter}}{\text{Schedule 40 Steel Pipe Inside Diameter}}\right)^{4.87} = \text{Factor}$$

C Value Multiplier

Value Of C	100	130	140	150
Multiplying Factor	0.713	1.16	1.33	1.51

Pipe Type	Diameter	Flow	Velocity	HWC		Friction Loss	Length	Pressure
Downstream	Elevation	Discharge	K-Factor	Pt	Pn	Fittings	Eq. Length	Summary
Upstream							Total Length	

Pipe Type Legend

AO	Arm-Over
BL	Branch Line
CM	Cross Main
DN	Drain
DR	Drop
DY	Dynamic
FM	Feed Main
FR	Feed Riser
MS	Miscellaneous
OR	Outrigger
RN	Riser Nipple
SP	Sprig
ST	Stand Pipe
UG	Underground

Units Legend

Diameter	Inch
Elevation	Foot
Flow	gpm
Discharge	gpm
Velocity	fps
Pressure	psi
Length	Foot
Friction Loss	psi/Foot
HWC	Hazen-Williams Constant
Pt	Total pressure at a point in a pipe
Pn	Normal pressure at a point in a pipe
Pf	Pressure loss due to friction between points
Pe	Pressure due to elevation difference between indicated points
Pv	Velocity pressure at a point in a pipe

Fittings Legend

ALV	Alarm Valve
AngV	Angle Valve
b	Bushing
BalV	Ball Valve
BFP	Backflow Preventer
BV	Butterfly Valve
C	Cross Flow Turn 90°
cplg	Coupling
Cr	Cross Run
CV	Check Valve
DelV	Deluge Valve
DPV	Dry Pipe Valve
E	90° Elbow
EE	45° Elbow
Ee1	11¼° Elbow
Ee2	22½° Elbow
f	Flow Device
fd	Flex Drop
FDC	Fire Department Connection
fE	90° FireLock(TM) Elbow
fEE	45° FireLock(TM) Elbow
flg	Flange
FN	Floating Node
fT	FireLock(TM) Tee
g	Gauge
GloV	Globe Valve
GV	Gate Valve
Ho	Hose
Hose	Hose
HV	Hose Valve
Hyd	Hydrant
LtE	Long Turn Elbow
mecT	Mechanical Tee
Noz	Nozzle
P1	Pump In
P2	Pump Out
PIV	Post Indicating Valve
PO	Pipe Outlet
PRV	Pressure Reducing Valve
PrV	Pressure Relief Valve
red	Reducer/Adapter
S	Supply
sCV	Swing Check Valve
Spr	Sprinkler
St	Strainer
T	Tee Flow Turn 90°
Tr	Tee Run
U	Union
WirF	Wirsbo
WMV	Water Meter Valve
Z	Cap

Hydraulic Summary

Job Number: S23-90
Report Description: Ordinary Group I - Level 2 - Clenan/Dry Floor Area

Job

Job Number: S23-90	Design Engineer: Queen
Job Name: CHC Puyallup Cannery	State Certification/License Number: ARCHEI*219DR
Address 1: 201 W. Main St	AHJ: Puyallup
Address 2: Puyallup, WA 98371	Job Site/Building: Cannery
Address 3:	Drawing Name: S23-090 - CHC Puyallup Cannery - 1-8th scale bkup

System

Most Demanding Sprinkler Data: 4.2 K-Factor 11.11 at 7.00	
Hose Allowance At Source: 250.00	
Additional Hose Supplies: Node / Flow(gpm)	
Total Hose Streams: 250.00	
System Flow Demand: 546.73	Total Water Required (Including Hose Allowance): 796.73
Maximum Pressure Unbalance In Loops: 0.00	
Maximum Velocity Above Ground: 13.78 between nodes 9 and 106	
Maximum Velocity Under Ground: 5.66 between nodes 3 and 7	
Volume capacity of Wet Pipes: 1528.43gal	Volume capacity of Dry Pipes:

Remote Area(s)

Occupancy: Ordinary Group I - Level 2 - Clenan/D	Job Suffix:
Density: 0.12gpm/ft²	Area of Application: 3000.00ft² (Actual 3029.16ft²)
Number Of Sprinklers Calculated: 44	Coverage Per Sprinkler: 225.00ft²

WASHINGTON STATE
CERTIFICATE OF COMPETENCY
FIRE PROTECTION SPRINKLER SYSTEMS
Theodore M. Queen
4930-0205-C Level 3
Archer Construction, Inc.
ARCHEI*219DR
11-22-23
Date
Signature
Expires DEC 31, 23

Supplies

Node	Name	Hose Flow (gpm)	Static (psi)	Residual (psi)	@	Flow (gpm)	Available (psi)	@	Total Demand (gpm)	Required (psi)	Safety Margin (psi)
1	Water Supply	250.00	51.00	38.00		2460.00	49.39		796.73	46.95	2.43

Contractor

Contractor Number: 22	Contact Name: / Contact Title:
Name of Contractor: Archer Construction	Phone: / Extension:
Address 1: 7855 South 206th ST	FAX:
Address 2: Kent, WA 98032	E-mail:
Address 3:	Web-Site:

Water Supply at Node 1

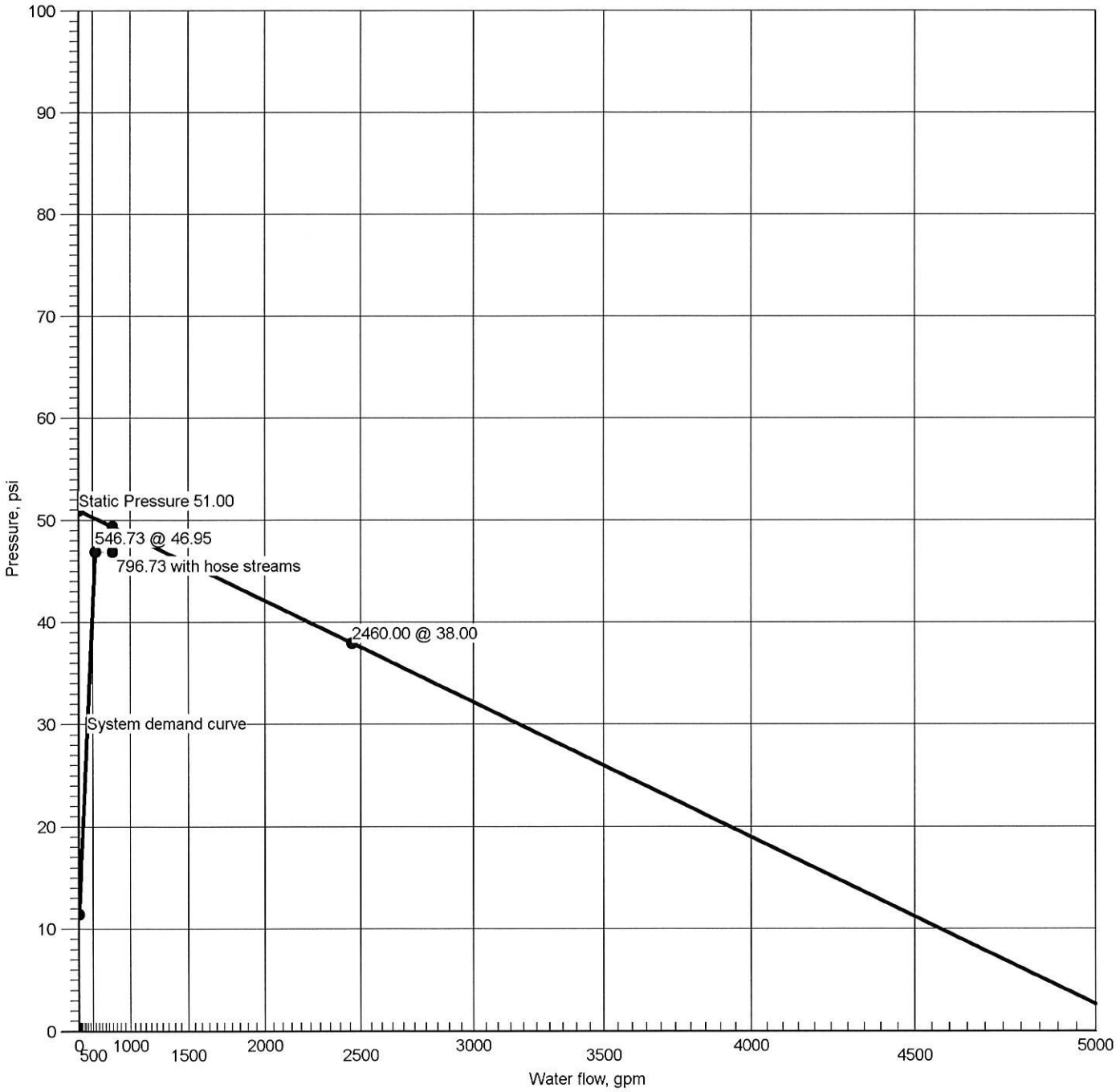

Hydraulic Graph	Water Supply at Node 1
Static: Pressure	51.00
Residual: Pressure	38.00 @ 2460.00
Available Pressure at Time of Test	49.39 @ 796.73
System Demand	46.95 @ 546.73
System Demand (Including Hose Allowance at Source)	46.95 @ 796.73

Summary Of Outflowing Devices

Job Number: S23-90
Report Description: Ordinary Group I - Level 2 - Clenan/Dry Floor Area

Device		Actual Flow (gpm)	Minimum Flow (gpm)	K-Factor (K)	Pressure (psi)		
Sprinkler	3001	12.25	11.11	4.2	8.50		
Sprinkler	3002	12.32	11.11	4.2	8.60		
Sprinkler	3003	12.46	11.11	4.2	8.81		
Sprinkler	3004	12.63	11.11	4.2	9.04		
Sprinkler	3005	11.30	11.11	4.2	7.23		
⇨ **Sprinkler**	**3006**	**11.11**	**11.11**	**4.2**	**7.00**		
Sprinkler	3007	11.44	11.11	4.2	7.42		
Sprinkler	3008	11.49	11.11	4.2	7.48		
Sprinkler	3009	12.35	11.11	4.2	8.64		
Sprinkler	3010	13.59	11.11	4.2	10.46		
Sprinkler	3011	11.45	11.11	4.2	7.43		
Sprinkler	3012	11.32	11.11	4.2	7.27		
Sprinkler	3013	11.68	11.11	4.2	7.74		
Sprinkler	3014	12.12	11.11	4.2	8.32		
Sprinkler	3015	13.11	11.11	4.2	9.74		
Sprinkler	3016	13.31	11.11	4.2	10.05		
Sprinkler	3017	12.21	11.11	4.2	8.45		
Sprinkler	3018	11.92	11.11	4.2	8.05		
Sprinkler	3019	12.36	11.11	4.2	8.65		
Sprinkler	3020	12.10	11.11	4.2	8.30		
Sprinkler	3021	13.55	11.11	4.2	10.41		
Sprinkler	3022	13.55	11.11	4.2	10.40		
Sprinkler	3023	14.38	11.11	4.2	11.72		
Sprinkler	3024	11.46	11.11	4.2	7.45		
Sprinkler	3025	11.45	11.11	4.2	7.44		
Sprinkler	3026	11.77	11.11	4.2	7.85		
Sprinkler	3027	12.23	11.11	4.2	8.48		
Sprinkler	3028	13.09	11.11	4.2	9.72		
Sprinkler	3029	13.30	11.11	4.2	10.02		
Sprinkler	3030	11.92	11.11	4.2	8.06		
Sprinkler	3031	11.76	11.11	4.2	7.84		
Sprinkler	3032	12.07	11.11	4.2	8.26		
Sprinkler	3033	12.11	11.11	4.2	8.31		
Sprinkler	3034	12.23	11.11	4.2	8.48		
Sprinkler	3035	14.35	11.11	4.2	11.68		
Sprinkler	3036	13.53	11.11	4.2	10.38		
Sprinkler	3037	13.65	11.11	4.2	10.56		
Sprinkler	3038	13.83	11.11	4.2	10.84		
Sprinkler	3039	11.56	11.11	4.2	7.58		
Sprinkler	3040	11.95	11.11	4.2	8.09		
Sprinkler	3041	12.01	11.11	4.2	8.18		
Sprinkler	3042	11.98	11.11	4.2	8.14		
Sprinkler	3043	12.28	11.11	4.2	8.55		
Sprinkler	3044	14.21	11.11	4.2	11.44		

⇨ Most Demanding Sprinkler Data

Node	Elevation(Foot)	Fittings	Pressure(psi)	Discharge(gpm)
3041	22-2½	Spr(-8.18)	8.18	12.01
3042	19-9	Spr(-8.14), fd(23-0)	8.14	11.98
3043	19-9	Spr(-8.55), fd(23-0)	8.55	12.28
3044	20-5	Spr(-11.44)	11.44	14.21
3	-4-0	T(47-3½)	46.86	
7	0-0		39.90	
9	2-0	PO(20-0)	38.91	
84	23-6½	E(7-0)	13.35	
101	19-5½	T(20-0)	15.12	
105	10-6	T(20-0)	24.85	
106	11-11	T(20-0)	27.60	
120	10-6	T(20-0)	24.84	
123	19-3½	T(20-0)	15.18	
175	24-4	fE(5-0)	12.99	
269	22-5	E(2-0)	7.55	
270	22-5	E(2-0)	7.59	
275	22-2½	PO(5-0)	8.06	
284	22-2½	PO(5-0)	8.11	
287	22-4	PO(5-0)	7.67	
292	22-4	PO(5-0)	7.33	
293	22-4	PO(5-0)	7.64	
294	22-4	PO(5-0)	8.55	
329	22-1½	PO(5-0)	7.76	
330	22-1	PO(5-0)	8.53	
332	22-0½	PO(5-0)	9.09	
334	22-1	E(2-0)	10.55	
344	21-11	PO(5-0)	9.36	
346	21-8½	PO(5-0)	8.90	
357	21-3½	PO(5-0)	8.67	
358	21-5½	PO(5-0)	9.28	
359	21-3½	PO(5-0)	9.42	
362	21-4	PO(5-0)	10.93	
367	20-4½	PO(8-0)	11.88	
368	20-4½	PO(8-0)	11.78	
369	20-4½	PO(8-0)	11.71	
370	20-4½	PO(5-0)	11.70	
371	20-4½	PO(8-0)	11.69	
372	20-4½	PO(8-0)	11.69	
373	20-4½	PO(5-0)	11.69	
374	20-4½	PO(8-0)	11.69	
375	20-4½	PO(8-0)	11.71	
376	20-4½	PO(8-0)	11.72	
381	20-4½	PO(5-0)	11.77	
382	20-4½	PO(8-0)	11.79	
383	20-4½	PO(8-0)	11.86	
384	20-4½	PO(8-0)	11.93	
408	21-0	T(8-0)	10.05	
410	21-0	T(8-0)	9.88	
418	21-0	T(8-0)	9.90	
429	20-11	PO(5-0)	11.60	
431	19-11½	E(2-0)	10.36	
432	19-11	E(2-0)	11.71	
1	-4-0	S	46.95	546.73
3001	22-5½	Spr(-8.50)	8.50	12.25
3002	22-4	Spr(-8.60)	8.60	12.32
3003	22-3	Spr(-8.81)	8.81	12.46
3004	21-7½	Spr(-9.04)	9.04	12.63
3005	22-5	Spr(-7.23)	7.23	11.30
3006	20-3	Spr(-7.00), fd(23-0)	7.00	11.11
3007	22-3½	Spr(-7.42)	7.42	11.44
3008	19-9	Spr(-7.48), fd(23-0)	7.48	11.49
3009	20-8	Spr(-8.64)	8.64	12.35

Node	Elevation(Foot)	Fittings	Pressure(psi)	Discharge(gpm)	
3010	19-4	Spr(-10.46)	10.46	13.59	
3011	22-5	Spr(-7.43)	7.43	11.45	
3012	20-3	Spr(-7.27), fd(23-0)	7.27	11.32	
3013	22-3½	Spr(-7.74)	7.74	11.68	
3014	21-10	Spr(-8.32)	8.32	12.12	
3015	20-8	Spr(-9.74)	9.74	13.11	
3016	19-10	Spr(-10.05)	10.05	13.31	
3017	22-5	Spr(-8.45)	8.45	12.21	
3018	20-3	Spr(-8.05), fd(23-0)	8.05	11.92	
3019	22-3½	Spr(-8.65)	8.65	12.36	
3020	19-3	Spr(-8.30), fd(34-0)	8.30	12.10	
3021	19-3	Spr(-10.41), fd(23-0)	10.41	13.55	
3022	19-3	Spr(-10.40), fd(23-0)	10.40	13.55	
3023	19-10	Spr(-11.72)	11.72	14.38	
3024	22-5	Spr(-7.45)	7.45	11.46	
3025	22-0	Spr(-7.44)	7.44	11.45	
3026	22-3	Spr(-7.85)	7.85	11.77	
3027	21-8	Spr(-8.48)	8.48	12.23	
3028	20-8	Spr(-9.72)	9.72	13.09	
3029	19-10	Spr(-10.02)	10.02	13.30	
3030	22-2½	Spr(-8.06)	8.06	11.92	
3031	22-2½	Spr(-7.84)	7.84	11.76	
3032	22-2½	Spr(-8.26)	8.26	12.07	
3033	19-9	Spr(-8.31), fd(23-0)	8.31	12.11	
3034	18-9	Spr(-8.48), fd(34-0)	8.48	12.23	
3035	19-7½	Spr(-11.68)	11.68	14.35	
3036	21-9	Spr(-10.38)	10.38	13.53	
3037	21-0	Spr(-10.56)	10.56	13.65	
3038	20-1½	Spr(-10.84)	10.84	13.83	
3039	20-3	Spr(-7.58), fd(23-0)	7.58	11.56	
3040	22-2½	Spr(-8.09)	8.09	11.95	

Pipe Type Downstream Upstream	Diameter Elevation	Flow Discharge	Velocity K-Factor	HWC Pt	Pn	Friction Loss Fittings	Length Eq. Length Total Length	Pressure Summary
••••• Route 1 •••••								
DY	1.0490	11.11	4.13	120		0.043874	0-0	Pf 1.23
3006	20-3	11.11	4.2	7.00		Sprinkler,	28-0	Pe -0.90
292	22-4			7.33		PO(5-0), fd(23-0)	28-0	Pv
BL	1.6100	22.41	3.53	120		0.019938	3-10½	Pf 0.08
292	22-4	11.30		7.33		Flow (q) from Route 2		Pe 0.02
3007	22-3½			7.42			3-10½	Pv
BL	1.6100	33.85	5.33	120		0.042769	6-2½	Pf 0.27
3007	22-3½	11.44	4.2	7.42		Sprinkler		Pe 0.07
329	22-1½			7.76			6-2½	Pv
BL	1.6100	45.34	7.15	120		0.073433	7-7	Pf 0.56
329	22-1½	11.49		7.76		Flow (q) from Route 7		Pe 0.35
357	21-3½			8.67			7-7	Pv
BL	1.6100	57.69	9.09	120		0.114655	2-10	Pf 1.24
357	21-3½	12.35		8.67		Flow (q) from Route 19	8-0	Pe 0.13
408	21-0			10.05		T(8-0)	10-10	Pv
BL	1.6100	71.27	11.23	120		0.169553	0-7½	Pf 1.46
408	21-0	13.59		10.05		Flow (q) from Route 28	8-0	Pe 0.27
368	20-4½			11.78		PO(8-0)	8-7½	Pv
CM	4.0260	219.71	5.54	120		0.015680	6-5½	Pf 0.10
368	20-4½	148.44		11.78		Flow (q) from Route 3		Pe
367	20-4½			11.88			6-5½	Pv
CM	4.0260	269.37	6.79	120		0.022859	84-4½	Pf 2.84
367	20-4½	49.66		11.88		Flow (q) from Route 17	40-0	Pe 0.40
101	19-5½			15.12		2E(10-0), T(20-0)	124-4½	Pv
CM	4.0260	273.24	6.89	120		0.023471	208-11½	Pf 5.84
101	19-5½	3.87		15.12		Flow (q) from Route 34	40-0	Pe 3.88
105	10-6			24.85		2E(10-0), T(20-0)	248-11½	Pv
CM	4.0260	275.33	6.94	120		0.023804	81-6	Pf 3.37
105	10-6	2.09		24.85		Flow (q) from Route 36	60-0	Pe -0.61
106	11-11			27.60		4E(10-0), T(20-0)	141-6	Pv
CM	4.0260	546.73	13.78	120		0.084683	20-9	Pf 7.01
106	11-11	271.40		27.60		Flow (q) from Route 5	62-0	Pe 4.30
9	2-0			38.91		3E(10-0), BV(12-0), PO(20-0)	82-9	Pv
UG	6.3570	546.73	5.53	120		0.009156	2-10	Pf 0.13
9	2-0			38.91			11-4	Pe 0.87
7	0-0			39.90		LtE(11-4)	14-2	Pv
UG	6.2800	546.73	5.66	140		0.007305	168-7	Pf 5.22
7	0-0			39.90			135-6½	Pe 1.73
3	-4-0			46.86		4E(22-1), BFP(-3.00), T(47-3½)	304-1	Pv
UG	8.3900	546.73	3.17	140		0.001782	50-8½	Pf 0.09
3	-4-0			46.86				Pe
1	-4-0			46.95		Water Supply	50-8½	Pv
		250.00				Hose Allowance At Source		
1		796.73						
••••• Route 2 •••••								
BL	1.6100	11.30	1.78	120		0.005615	9-0	Pf 0.05
3005	22-5	11.30	4.2	7.23		Sprinkler		Pe 0.04
292	22-4			7.33			9-0	Pv
••••• Route 3 •••••								
DY	1.0490	11.32	4.20	120		0.045429	0-0	Pf 1.27
3012	20-3	11.32	4.2	7.27		Sprinkler,	28-0	Pe -0.90
293	22-4			7.64		PO(5-0), fd(23-0)	28-0	Pv
BL	1.6100	22.77	3.59	120		0.020539	3-10½	Pf 0.08
293	22-4	11.45		7.64		Flow (q) from Route 4		Pe 0.02
3013	22-3½			7.74			3-10½	Pv
BL	1.6100	34.45	5.43	120		0.044188	8-10	Pf 0.39
3013	22-3½	11.68	4.2	7.74		Sprinkler		Pe 0.19
3014	21-10			8.32			8-10	Pv
BL	1.6100	46.57	7.34	120		0.077167	7-9	Pf 1.22
3014	21-10	12.12	4.2	8.32		Sprinkler,	8-0	Pe 0.36
418	21-0			9.90		T(8-0)	15-9	Pv
BL	1.6100	72.99	11.50	120		0.177190	0-8	Pf 1.53
418	21-0	26.42		9.90		Flow (q) from Route 22	8-0	Pe 0.28
369	20-4½			11.71		PO(8-0)	8-8	Pv
CM	4.0260	148.44	3.74	120		0.007591	9-5½	Pf 0.07
369	20-4½	75.45		11.71		Flow (q) from Route 27		Pe
368	20-4½			11.78			9-5½	Pv
••••• Route 4 •••••								
BL	1.0490	11.45	4.25	120		0.046357	0-6	Pf 0.12
3011	22-5	11.45	4.2	7.43		Sprinkler,	2-0	Pe
269	22-5			7.55		E(2-0)	2-6	Pv

Pipe Type / Downstream / Upstream	Diameter / Elevation	Flow / Discharge	Velocity / K-Factor	HWC / Pt	Pn	Friction Loss / Fittings	Length / Eq. Length / Total Length	Pressure Summary
BL	1.6100	11.45	1.80	120		0.005755	9-0	Pf 0.05
269	22-5			7.55				Pe 0.04
293	22-4			7.64			9-0	Pv
••••• Route 5 •••••								
DR	1.0490	11.45	4.25	120		0.046393	1-1	Pf 0.37
3025	22-0	11.45	4.2	7.44		Sprinkler,	7-0	Pe -0.14
287	22-4			7.67		E(2-0), PO(5-0)	8-1	Pv
BL	1.6100	22.92	3.61	120		0.020781	7-2	Pf 0.15
287	22-4	11.46		7.67		Flow (q) from Route 6		Pe 0.03
3026	22-3			7.85			7-2	Pv
BL	1.6100	34.68	5.47	120		0.044736	8-4½	Pf 0.37
3026	22-3	11.77	4.2	7.85		Sprinkler		Pe 0.26
3027	21-8			8.48			8-4½	Pv
BL	1.6100	46.92	7.39	120		0.078225	6-3	Pf 1.11
3027	21-8	12.23	4.2	8.48		Sprinkler,	8-0	Pe 0.29
410	21-0			9.88		T(8-0)	14-3	Pv
BL	1.6100	73.31	11.55	120		0.178616	0-7½	Pf 1.54
410	21-0	26.39		9.88		Flow (q) from Route 21	8-0	Pe 0.27
374	20-4½			11.69		PO(8-0)	8-7½	Pv
CM	4.0260	87.91	2.22	120		0.002880	7-7	Pf 0.02
374	20-4½	14.60		11.69		Flow (q) from Route 10		Pe 0.00
375	20-4½			11.71			7-7	Pv
CM	4.0260	102.26	2.58	120		0.003810	2-0	Pf 0.01
375	20-4½	14.35		11.71		Flow (q) from Route 32		Pe
376	20-4½			11.72			2-0	Pv
CM	4.0260	162.36	4.09	120		0.008960	6-0	Pf 0.05
376	20-4½	60.10		11.72		Flow (q) from Route 9		Pe
381	20-4½			11.77			6-0	Pv
CM	4.0260	176.19	4.44	120		0.010423	1-11½	Pf 0.02
381	20-4½	13.83		11.77		Flow (q) from Route 30		Pe
382	20-4½			11.79			1-11½	Pv
CM	4.0260	203.37	5.13	120		0.013591	4-7	Pf 0.06
382	20-4½	27.19		11.79		Flow (q) from Route 25		Pe
383	20-4½			11.86			4-7	Pv
CM	4.0260	263.16	6.63	120		0.021894	3-5½	Pf 0.08
383	20-4½	59.78		11.86		Flow (q) from Route 8		Pe
384	20-4½			11.93			3-5½	Pv
CM	4.0260	277.36	6.99	120		0.024130	75-3½	Pf 2.78
384	20-4½	14.21		11.93		Flow (q) from Route 31	40-0	Pe 0.47
123	19-3½			15.18		2E(10-0), T(20-0)	115-3½	Pv
CM	4.0260	273.49	6.89	120		0.023510	208-9½	Pf 5.85
123	19-3½			15.18			40-0	Pe 3.81
120	10-6			24.84		2E(10-0), T(20-0)	248-9½	Pv
CM	4.0260	271.40	6.84	120		0.023179	105-5	Pf 3.37
120	10-6			24.84			40-0	Pe -0.61
106	11-11			27.60		2E(10-0), T(20-0)	145-5	Pv
••••• Route 6 •••••								
BL	1.0490	11.46	4.26	120		0.046475	1-0	Pf 0.14
3024	22-5	11.46	4.2	7.45		Sprinkler,	2-0	Pe
270	22-5			7.59		E(2-0)	3-0	Pv
BL	1.6100	11.46	1.81	120		0.005770	7-6	Pf 0.04
270	22-5			7.59				Pe 0.04
287	22-4			7.67			7-6	Pv
••••• Route 7 •••••								
DY	1.0490	11.49	4.26	120		0.046658	0-0	Pf 1.31
3008	19-9	11.49	4.2	7.48		Sprinkler,	28-0	Pe -1.02
329	22-1½			7.76		PO(5-0), fd(23-0)	28-0	Pv
••••• Route 8 •••••								
DY	1.0490	11.56	4.29	120		0.047234	0-0	Pf 1.32
3039	20-3	11.56	4.2	7.58		Sprinkler,	28-0	Pe -0.85
275	22-2½			8.06		PO(5-0), fd(23-0)	28-0	Pv
BL	1.6100	11.56	1.82	120		0.005864	5-9½	Pf 0.03
275	22-2½			8.06				Pe 0.00
3040	22-2½			8.09			5-9½	Pv
BL	1.6100	23.51	3.71	120		0.021789	4-0	Pf 0.09
3040	22-2½	11.95	4.2	8.09		Sprinkler		Pe 0.00
3041	22-2½			8.18			4-0	Pv
BL	1.6100	35.52	5.60	120		0.046753	6-7½	Pf 0.31
3041	22-2½	12.01	4.2	8.18		Sprinkler		Pe 0.05
330	22-1			8.53			6-7½	Pv
BL	1.6100	47.50	7.49	120		0.080049	5-11	Pf 0.47
330	22-1	11.98		8.53		Flow (q) from Route 12		Pe 0.27
358	21-5½			9.28			5-11	Pv

Pipe Type / Downstream / Upstream	Diameter / Elevation	Flow / Discharge	Velocity / K-Factor	HWC / Pt	Pn	Friction Loss / Fittings	Length / Eq. Length / Total Length	Pressure Summary
BL	1.6100	59.78	9.42	120		0.122483	5-2	Pf 2.10
358	21-5½	12.28		9.28		Flow (q) from Route 18	12-0	Pe 0.48
383	20-4½			11.86		E(4-0), PO(8-0)	17-2	Pv
••••• Route 9 •••••								
BL	1.0490	11.76	4.37	120		0.048742	0-6	Pf 0.27
3031	22-2½	11.76	4.2	7.84		Sprinkler,	5-0	Pe
284	22-2½			8.11		PO(5-0)	5-6	Pv
BL	1.6100	23.69	3.73	120		0.022093	6-8	Pf 0.15
284	22-2½	11.92		8.11		Flow (q) from Route 11		Pe 0.00
3032	22-2½			8.26			6-8	Pv
BL	1.6100	35.76	5.64	120		0.047331	9-0½	Pf 0.43
3032	22-2½	12.07	4.2	8.26		Sprinkler		Pe 0.21
346	21-8½			8.90			9-0½	Pv
BL	1.6100	47.87	7.54	120		0.081183	4-1½	Pf 0.34
346	21-8½	12.11		8.90		Flow (q) from Route 14		Pe 0.19
359	21-3½			9.42			4-1½	Pv
BL	1.6100	60.10	9.47	120		0.123677	3-4½	Pf 1.90
359	21-3½	12.23		9.42		Flow (q) from Route 16	12-0	Pe 0.40
376	20-4½			11.72		E(4-0), PO(8-0)	15-4½	Pv
••••• Route 10 •••••								
DY	1.0490	11.92	4.42	120		0.049928	0-0	Pf 1.40
3018	20-3	11.92	4.2	8.05		Sprinkler,	28-0	Pe -0.90
294	22-4			8.55		PO(5-0), fd(23-0)	28-0	Pv
BL	1.6100	24.12	3.80	120		0.022850	3-10½	Pf 0.09
294	22-4	12.21		8.55		Flow (q) from Route 15		Pe 0.02
3019	22-3½			8.65			3-10½	Pv
BL	1.6100	36.48	5.75	120		0.049108	6-10	Pf 0.33
3019	22-3½	12.36	4.2	8.65		Sprinkler		Pe 0.10
332	22-0½			9.09			6-10	Pv
BL	1.6100	48.58	7.66	120		0.083431	10-5½	Pf 1.87
332	22-0½	12.10		9.09		Flow (q) from Route 13	12-0	Pe 0.73
372	20-4½			11.69		E(4-0), PO(8-0)	22-5½	Pv
CM	4.0260	1.06	0.03	120		0.000001	0-11	Pf 0.00
372	20-4½			11.69				Pe 0.00
373	20-4½			11.69			0-11	Pv
CM	4.0260	14.60	0.37	120		0.000104	5-7½	Pf 0.00
373	20-4½	13.55		11.69		Flow (q) from Route 26		Pe -0.00
374	20-4½			11.69			5-7½	Pv
••••• Route 11 •••••								
BL	1.6100	11.92	1.88	120		0.006206	8-0	Pf 0.05
3030	22-2½	11.92	4.2	8.06		Sprinkler		Pe 0.00
284	22-2½			8.11			8-0	Pv
••••• Route 12 •••••								
DY	1.0490	11.98	4.45	120		0.050443	0-0	Pf 1.41
3042	19-9	11.98	4.2	8.14		Sprinkler,	28-0	Pe -1.02
330	22-1			8.53		PO(5-0), fd(23-0)	28-0	Pv
••••• Route 13 •••••								
DY	1.0490	12.10	4.49	120		0.051367	0-0	Pf 2.00
3020	19-3	12.10	4.2	8.30		Sprinkler,	39-0	Pe -1.21
332	22-0½			9.09		PO(5-0), fd(34-0)	39-0	Pv
••••• Route 14 •••••								
DY	1.0490	12.11	4.49	120		0.051427	0-0	Pf 1.44
3033	19-9	12.11	4.2	8.31		Sprinkler,	28-0	Pe -0.86
346	21-8½			8.90		PO(5-0), fd(23-0)	28-0	Pv
••••• Route 15 •••••								
BL	1.6100	12.21	1.92	120		0.006480	9-0	Pf 0.06
3017	22-5	12.21	4.2	8.45		Sprinkler		Pe 0.04
294	22-4			8.55			9-0	Pv
••••• Route 16 •••••								
DY	1.0490	12.23	4.54	120		0.052393	0-0	Pf 2.04
3034	18-9	12.23	4.2	8.48		Sprinkler,	39-0	Pe -1.10
359	21-3½			9.42		PO(5-0), fd(34-0)	39-0	Pv
••••• Route 17 •••••								
BL	1.6100	12.25	1.93	120		0.006521	8-9½	Pf 0.06
3001	22-5½	12.25	4.2	8.50		Sprinkler		Pe 0.04
3002	22-4			8.60			8-9½	Pv
BL	1.6100	24.57	3.87	120		0.023635	7-2	Pf 0.17
3002	22-4	12.32	4.2	8.60		Sprinkler		Pe 0.03
3003	22-3			8.81			7-2	Pv
BL	1.6100	37.03	5.84	120		0.050494	7-10½	Pf 0.40
3003	22-3	12.46	4.2	8.81		Sprinkler		Pe 0.15
344	21-11			9.36			7-10½	Pv

Pipe Type / Downstream / Upstream	Diameter / Elevation	Flow / Discharge	Velocity / K-Factor	HWC / Pt	Pn	Friction Loss / Fittings	Length / Eq. Length / Total Length	Pressure Summary
BL	1.6100	49.66	7.83	120		0.086890	9-4	Pf 1.85
344	21-11	12.63		9.36		Flow (q) from Route 20	12-0	Pe 0.67
367	20-4½			11.88		E(4-0), PO(8-0)	21-4	Pv
••••• Route 18 •••••								
DY	1.0490	12.28	4.56	120		0.052777	0-0	Pf 1.48
3043	19-9	12.28	4.2	8.55		Sprinkler,	28-0	Pe -0.75
358	21-5½			9.28		PO(5-0), fd(23-0)	28-0	Pv
••••• Route 19 •••••								
BL	1.0490	12.35	4.58	120		0.053314	0-7½	Pf 0.30
3009	20-8	12.35	4.2	8.64		Sprinkler,	5-0	Pe -0.27
357	21-3½			8.67		PO(5-0)	5-7½	Pv
••••• Route 20 •••••								
BL	1.0490	12.63	4.69	120		0.055571	1-2	Pf 0.45
3004	21-7½	12.63	4.2	9.04		Sprinkler,	7-0	Pe -0.13
344	21-11			9.36		E(2-0), PO(5-0)	8-2	Pv
••••• Route 21 •••••								
BL	1.6100	26.39	4.16	120		0.026983	3-1½	Pf 0.30
3028	20-8	13.30	4.2	9.72		Sprinkler,, Flow (q) from Route	8-0	Pe -0.14
410	21-0			9.88		23	11-1½	Pv
						T(8-0)		
••••• Route 22 •••••								
BL	1.6100	26.42	4.16	120		0.027034	3-1½	Pf 0.30
3015	20-8	13.31	4.2	9.74		Sprinkler,, Flow (q) from Route	8-0	Pe -0.14
418	21-0			9.90		24	11-1½	Pv
						T(8-0)		
••••• Route 23 •••••								
BL	1.6100	13.30	2.10	120		0.007591	8-0½	Pf 0.06
3029	19-10	13.30	4.2	10.02		Sprinkler		Pe -0.36
3028	20-8			9.72			8-0½	Pv
••••• Route 24 •••••								
BL	1.6100	13.31	2.10	120		0.007607	8-0½	Pf 0.06
3016	19-10	13.31	4.2	10.05		Sprinkler		Pe -0.37
3015	20-8			9.74			8-0½	Pv
••••• Route 25 •••••								
BL	1.0490	13.53	5.02	120		0.063188	0-10	Pf 0.30
3036	21-9	13.53	4.2	10.38		Sprinkler,	4-0	Pe -0.13
334	22-1			10.55		2E(2-0)	4-10	Pv
BL	1.6100	13.53	2.13	120		0.007845	7-0	Pf 0.06
334	22-1			10.55				Pe 0.32
362	21-4			10.93			7-0	Pv
BL	1.6100	27.19	4.28	120		0.028505	3-9	Pf 0.45
362	21-4	13.65		10.93		Flow (q) from Route 29	12-0	Pe 0.41
382	20-4½			11.79		E(4-0), PO(8-0)	15-9	Pv
••••• Route 26 •••••								
DY	1.0490	13.55	5.03	120		0.063300	0-0	Pf 1.77
3022	19-3	13.55	4.2	10.40		Sprinkler,	28-0	Pe -0.49
373	20-4½			11.69		PO(5-0), fd(23-0)	28-0	Pv
••••• Route 27 •••••								
DY	1.0490	13.55	5.03	120		0.063328	0-0	Pf 1.77
3021	19-3	13.55	4.2	10.41		Sprinkler,	28-0	Pe -0.49
370	20-4½			11.70		PO(5-0), fd(23-0)	28-0	Pv
CM	4.0260	75.45	1.90	120		0.002171	4-10½	Pf 0.01
370	20-4½	61.90		11.70		Flow (q) from Route 33		Pe -0.00
369	20-4½			11.71			4-10½	Pv
••••• Route 28 •••••								
BL	1.0490	13.59	5.04	120		0.063629	0-7½	Pf 0.17
3010	19-4	13.59	4.2	10.46		Sprinkler,	2-0	Pe -0.27
431	19-11½			10.36		E(2-0)	2-7½	Pv
BL	1.6100	13.59	2.14	120		0.007899	9-11½	Pf 0.14
431	19-11½			10.36			8-0	Pe -0.46
408	21-0			10.05		T(8-0)	17-11½	Pv
••••• Route 29 •••••								
BL	1.0490	13.65	5.07	120		0.064198	0-9½	Pf 0.50
3037	21-0	13.65	4.2	10.56		Sprinkler,	7-0	Pe -0.13
362	21-4			10.93		E(2-0), PO(5-0)	7-9½	Pv
••••• Route 30 •••••								
BL	1.0490	13.83	5.13	120		0.065752	8-9½	Pf 1.04
3038	20-1½	13.83	4.2	10.84		Sprinkler,	7-0	Pe -0.10
381	20-4½			11.77		E(2-0), PO(5-0)	15-9½	Pv
••••• Route 31 •••••								
BL	1.0490	14.21	5.27	120		0.069122	0-6½	Pf 0.38
3044	20-5	14.21	4.2	11.44		Sprinkler,	5-0	Pe -0.23
429	20-11			11.60		PO(5-0)	5-6½	Pv

Pipe Type / Downstream / Upstream	Diameter / Elevation	Flow / Discharge	Velocity / K-Factor	HWC / Pt	Pn	Friction Loss / Fittings	Length / Eq. Length / Total Length	Pressure Summary
BL	1.6100	14.21	2.24	120		0.008581	1-4	Pf 0.10
429	20-11			11.60			10-0	Pe 0.24
384	20-4½			11.93		LtE(2-0), PO(8-0)	11-4	Pv
••••• Route 32 •••••								
BL	1.0490	14.35	5.33	120		0.070441	0-3½	Pf 0.16
3035	19-7½	14.35	4.2	11.68		Sprinkler,	2-0	Pe -0.13
432	19-11			11.71		E(2-0)	2-3½	Pv
BL	1.6100	14.35	2.26	120		0.008745	10-8½	Pf 0.20
432	19-11			11.71			12-0	Pe -0.19
375	20-4½			11.71		E(4-0), PO(8-0)	22-8½	Pv
••••• Route 33 •••••								
BL	1.6100	14.38	2.27	120		0.008772	11-9½	Pf 0.21
3023	19-10	14.38	4.2	11.72		Sprinkler,	12-0	Pe -0.23
371	20-4½			11.69		E(4-0), PO(8-0)	23-9½	Pv
CM	4.0260	61.90	1.56	120		0.001505	1-8	Pf 0.00
371	20-4½	47.52		11.69		Flow (q) from Route 35		Pe 0.00
370	20-4½			11.70			1-8	Pv
••••• Route 34 •••••								
CM	4.0260	3.87	0.10	120		0.000009	37-6	Pf 0.00
84	23-6½	3.87		13.35		Flow (q) from Route 37	40-0	Pe 1.77
101	19-5½			15.12		2E(10-0), T(20-0)	77-6	Pv
••••• Route 35 •••••								
CM	4.0260	47.52	1.20	120		0.000923	3-5	Pf 0.00
372	20-4½			11.69				Pe
371	20-4½			11.69			3-5	Pv
••••• Route 36 •••••								
CM	3.0680	2.09	0.09	120		0.000011	181-2	Pf 0.00
120	10-6			24.84			28-0	Pe
105	10-6			24.85		4E(7-0)	209-2	Pv
••••• Route 37 •••••								
CM	4.0260	3.87	0.10	120		0.000009	36-9	Pf 0.00
123	19-3½			15.18		T(20-0)	65-0	Pe -2.20
175	24-4			12.99		4E(10-0), fE(5-0)	101-9	Pv
CM	3.0680	3.87	0.17	120		0.000034	151-3½	Pf 0.01
175	24-4			12.99			44-0	Pe 0.35
84	23-6½			13.35		6fE(5-0), 2E(7-0)	195-3½	Pv

Equivalent Pipe Lengths of Valves and Fittings (C=120 only)

$$\left(\frac{\text{Actual Inside Diameter}}{\text{Schedule 40 Steel Pipe Inside Diameter}}\right)^{4.87} = \text{Factor}$$

C Value Multiplier

Value Of C	100	130	140	150
Multiplying Factor	0.713	1.16	1.33	1.51

Pipe Type	Diameter	Flow	Velocity	HWC		Friction Loss	Length	Pressure
Downstream	Elevation	Discharge	K-Factor	Pt	Pn	Fittings	Eq. Length	Summary
Upstream							Total Length	

Pipe Type Legend

AO	Arm-Over
BL	Branch Line
CM	Cross Main
DN	Drain
DR	Drop
DY	Dynamic
FM	Feed Main
FR	Feed Riser
MS	Miscellaneous
OR	Outrigger
RN	Riser Nipple
SP	Sprig
ST	Stand Pipe
UG	Underground

Units Legend

Diameter	Inch
Elevation	Foot
Flow	gpm
Discharge	gpm
Velocity	fps
Pressure	psi
Length	Foot
Friction Loss	psi/Foot
HWC	Hazen-Williams Constant
Pt	Total pressure at a point in a pipe
Pn	Normal pressure at a point in a pipe
Pf	Pressure loss due to friction between points
Pe	Pressure due to elevation difference between indicated points
Pv	Velocity pressure at a point in a pipe

Fittings Legend

ALV	Alarm Valve
AngV	Angle Valve
b	Bushing
BalV	Ball Valve
BFP	Backflow Preventer
BV	Butterfly Valve
C	Cross Flow Turn 90°
cplg	Coupling
Cr	Cross Run
CV	Check Valve
DelV	Deluge Valve
DPV	Dry Pipe Valve
E	90° Elbow
EE	45° Elbow
Ee1	11¼° Elbow
Ee2	22½° Elbow
f	Flow Device
fd	Flex Drop
FDC	Fire Department Connection
fE	90° FireLock(TM) Elbow
fEE	45° FireLock(TM) Elbow
flg	Flange
FN	Floating Node
fT	FireLock(TM) Tee
g	Gauge
GloV	Globe Valve
GV	Gate Valve
Ho	Hose
Hose	Hose
HV	Hose Valve
Hyd	Hydrant
LtE	Long Turn Elbow
mecT	Mechanical Tee
Noz	Nozzle
P1	Pump In
P2	Pump Out
PIV	Post Indicating Valve
PO	Pipe Outlet
PRV	Pressure Reducing Valve
PrV	Pressure Relief Valve
red	Reducer/Adapter
S	Supply
sCV	Swing Check Valve
Spr	Sprinkler
St	Strainer
T	Tee Flow Turn 90°
Tr	Tee Run
U	Union
WirF	Wirsbo
WMV	Water Meter Valve
Z	Cap

PRHM20231549

Gray & Osborne, Inc.
CONSULTING ENGINEERS

MEMORANDUM

TO: BRIAN JOHNSON, WATER SYSTEM SPECIALIST
FROM: KERRI SIDEBOTTOM, P.E.
DATE: NOVEMBER 13, 2023
SUBJECT: 111 – 201 WEST MAIN FIRE FLOW AVAILABILITY
CITY OF PUYALLUP, PIERCE COUNTY, WASHINGTON
G&O #21415.17

Per your request, I have analyzed the available fire flow at two existing hydrants located at 111 and 201 West Main, in the central part of the City's water service area. The setup of the hydraulic model and the assumptions used to determine the static pressure and available fire flow are noted as follows.

- The available fire flows and pressures are measured at Nodes J2228 and J2230, corresponding to existing hydrants NW290 and SW209, respectively, as shown in the attached Figure 1.
- Water system demands are based on projected 2038 demands and reservoirs are depleted of fire suppression and equalizing storage, as established in the *2019 Water System Plan* (WSP) approved by the Department of Health (DOH). The City's water model was updated in 2021 to reflect additional system improvements since the WSP was developed.
- All pump stations are idle, and the Salmon Springs source is operating at 1,100 gpm.

The hydrants are located in Zone 1, which is supplied by Maplewood Springs and the 15th Avenue SE Reservoirs. The system was modeled as-is, with no new piping proposed at this time.

The available pressure under 2038 peak hour demands at the hydrant is included in Table 1.

TABLE 1

Peak Hour Pressure

Node	Hydrant	Elevation, feet	Peak Hour Pressure, psi
J2228	NW290	44	51
J2230	SW209	45	51

1130 Rainier Avenue S., Suite 300 Seattle, Washington 98144 (206) 284-0860 Fax (206) 283-3206

Available fire flow was measured at two existing hydrants: Hydrant NW290 (Node J2228) and Hydrant SW209 (Node J2230). The first hydrant is located on an existing 6-inch fire main dead-end within the property, while the other is located on an existing 8-inch main in the street. The results of this modeling are included in Table 2. The modeled fire flow is available at any hydrant individually, but not simultaneously.

TABLE 2

Modeled Fire Flow Availability

Node	Hydrant	Available Fire Flow, gpm	Residual Pressure at Available Fire Flow, psi	Minimum System Pressure at Available Fire Flow, psi
J2228	NW290	880(1)	42	30
J2230	SW209	2,460(1)	38	30

(1) Limited by maximum system-wide velocity of 10 fps.

Fire flow to both of the hydrants is limited by the 10-fps maximum velocity through the existing 6-inch fire main and the 8-inch pipe on West Main. The dead-end fire main supplying Node J2228 is only 6 inches in diameter and cannot supply more than 880 gpm without exceeding the 10-fps velocity limit. However, Node J2230 is located on an 8-inch diameter main that provides water from two directions, and as such, can sustain a higher flow under the velocity and pressure constraints.

The Department of Health and City Standards for water distribution systems are to meet the peak hourly demand of the system while providing a minimum pressure of 30 psi, system-wide. Under peak daily demand with a fire flow, the system is designed to maintain a minimum pressure of 20 psi, system-wide. Although the peak hourly demand pressure may currently be higher than these standards, the Developer must recognize that the City may not provide pressure higher than 30 psi in the future. The flows and pressures determined in this memo are based on the approximate hydrant elevation at ground level. The Developer may design their sprinkler system for whatever pressure they wish; however, they must recognize and be responsible for conditions when the pressure may be less than currently exists.

KS/sr

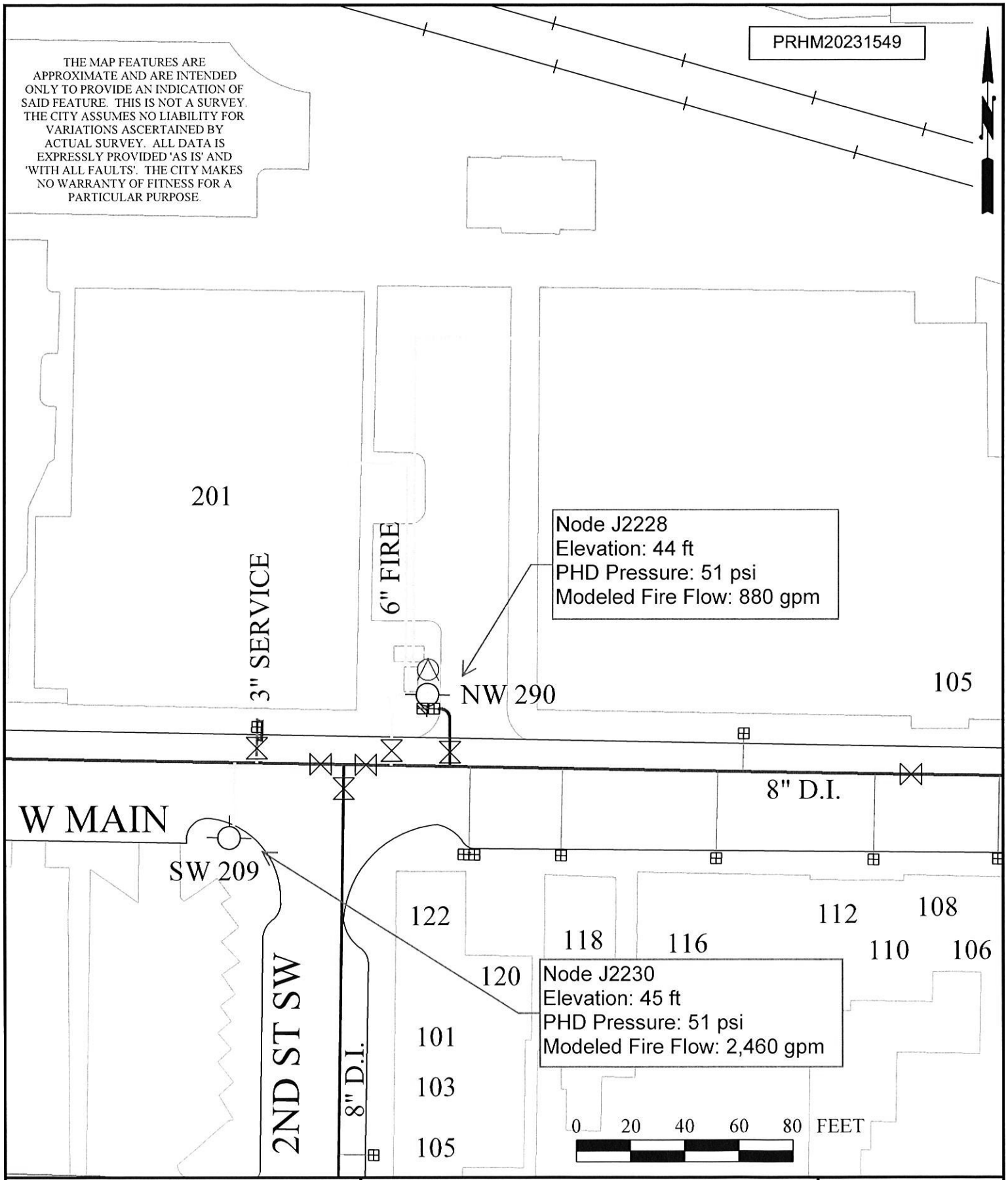

CITY OF PUYALLUP
PUBLIC WORKS
WATER DIVISION

HYDRAULIC MODEL FOR 111 - 201 W MAIN

SCALE AS SHOWN

11/08/2023

COP\PW\WATER\S_MAINT\PDF\QSEC\PG109\MODEL FOR 111-201 W MAIN

TOLBrace™ Seismic Bracing Calculations

Project Address: CHC Puyallup Garage
201 W. Main St
Puyallup, WA
Job # 23-090

Contractor: Archer Construction
Address: 7855 S. 206th Street
Kent, WA 98032
Phone:
License:

EATON
Powering Business Worldwide

Calculations based on 2016 NFPA Pamphlet #13

Brace Information

Maximum Brace Length	7' 0" (2.134 m)
Diameter of Brace	1" Sch.40
Type of Brace	Sch. 40
Angle of Brace	60° Min.
Least Rad. of Gyration	0.42" (11 mm)
L/R Value	200
Max Horizontal Load	1604 lbs (728 kg)

Fastener Information

Orientation to Connecting Surface	NFPA Type F
Fastener	
Type	Through-Bolt
Diameter	1/2in.
Length	3-1/2in.
Maximum Load	600 lbs (272 kg)
Prying Factor	N/A

TOLCO™ Brace Components

TOLCO™ Component	Listed Load	Adjusted Loa
Fig. 1001 Clamp	2015 lbs (914 kg)	1745 lbs (792 kg)
Fig.909 No-Thread Swivel	2015 lbs (914 kg)	1745 lbs (792 kg)
See Fastener Information		

*Calculation Based on CONCENTRIC Loading
*Please Note: These calculations are for TOLCO™ components only. Use of any other components voids these calculations and the listing of the assembly.

Seismic Brace Assembly Detail

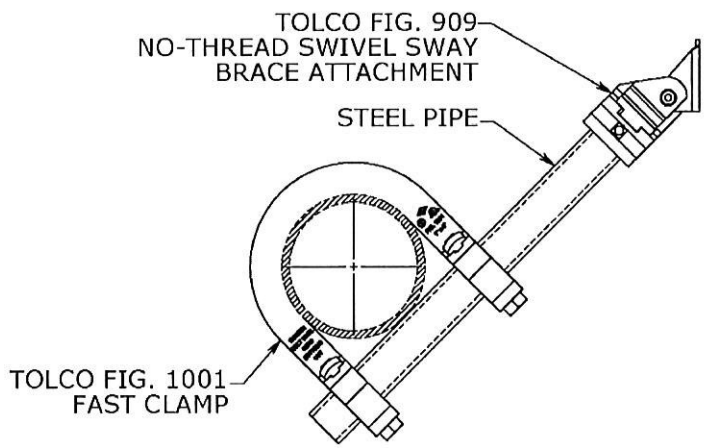

Brace Identification on Plans W1 (4")

Brace Type Lateral [X] Longitudinal [ ] 4-Way [ ]

Sprinkler System Load Calculation (Fpw = CpWp)

Cp = 0.67

Diameter	Type	Length	Total Length	Weight Per Unit Length	Total Weight
4" (100 mm)	Sch. 40	21 ft (6.4 m)	21 ft (6.4 m)	16.4 lb/ft (24.41 kg/m)	344 lbs (156 kg)
1.5" (40 mm)	Sch. 40	115 ft (35.1 m)	115 ft (35.1 m)	3.61 lb/ft (5.37 kg/m)	415 lbs (188 kg)
1" (25 mm)	Sch. 40	9 ft (2.7 m)	9 ft (2.7 m)	2.05 lb/ft (3.05 kg/m)	18 lbs (8 kg)

Subtotal Weight	777 lbs (352 kg)
Wp (incl. 15%)	894 lbs (405 kg)
Total (Fpw)	599 lbs (272 kg)
Maximum Fpw per 9.3.5.5.2 (if applicable)	2385 lb (1081 kg)

Main Size	Type/Sch.	Spacing (ft)
4"	Sch. 40	21

TOLBrace™ Seismic Calculation

CHC Puyallup Garage — Job # 23-090

201 W. Main St

Brace Identification	W1 (4")
Brace Type (Per NFPA#13)	NFPA Type F
Braced Pipe (ft)	4" Sch.40 Steel Pipe
Spacing of Brace	21' 0" (6.4 m)
Orientation of Brace	Lateral
Bracing Material	1" Sch.40
Maximum Brace Length	7' 0" (2.13 m)
Slenderness Ratio used for Load Calculation	200
True Angle of Brace for Calculation	60°
Type of Fastener	1/2in. X 3-1/2in. Through-Bolt
Length of Fastener	3-1/2in.

Summary of Pipe within Zone of Influence

4" Sch.40 Steel Pipe (101.6 mm)	21 ft (6.4 m)
1.5" Sch.40 Steel Pipe (38.1 mm)	115 ft (35.1 m)
1" Sch.40 Steel Pipe (25.4 mm)	9 ft (2.7 m)

WASHINGTON STATE
CERTIFICATE OF COMPETENCY
FIRE PROTECTION SPRINKLER SYSTEMS
Theodore M. Queen
4930-0205-C Level 3
Archer Construction, Inc.
ARCHEI*219DR
11-22-23
Date
Signature
Expires DEC 31, 23

G-Factor Used 0.67

Allowance for Heads and Fittings	15%

Conclusions

Total Adjusted Load of Pipe in Zone of Influence	599 lbs (272 kg)
Material Capacity	1604 lbs (728 kg)
Fastener Capacity	600 lbs (272 kg)
Fig. 1001 Clamp	1745 lbs (792 kg)
Fig.909 No-Thread Swivel	1745 lbs (792 kg)
Structural Member	Beam

Calculations prepared by Queen

* The description of the Structural Member is for informational purposes only.
TOLBrace™ software calculates the brace assembly only, not the structure it is attached to.
Calculated with TOLBrace™ 8
Visit us at www.tolco.com

TOLBrace™ Seismic Bracing Calculations

Project Address: CHC Puyallup Garage
201 W. Main St
Puyallup, WA
Job # 23-090

Contractor: Archer Construction
Address: 7855 S. 206th Street
Kent, WA 98032
Phone:
License:

EATON
Powering Business Worldwide

Calculations based on 2016 NFPA Pamphlet #13

Brace Information

Maximum Brace Length	7' 0" (2.134 m)
Diameter of Brace	1" Sch.40
Type of Brace	Sch. 40
Angle of Brace	60° Min.
Least Rad. of Gyration	0.42" (11 mm)
L/R Value	200
Max Horizontal Load	1604 lbs (728 kg)

Fastener Information

Orientation to Connecting Surface NFPA Type F

Fastener

Type	Through-Bolt
Diameter	1/2in.
Length	3-1/2in.
Maximum Load	600 lbs (272 kg)
Prying Factor	N/A

TOLCO™ Brace Components

TOLCO™ Component	Listed Load	Adjusted Loa
Fig. 1001 Clamp	2015 lbs (914 kg)	1745 lbs (792 kg)
Fig.909 No-Thread Swivel	2015 lbs (914 kg)	1745 lbs (792 kg)
See Fastener Information		

*Calculation Based on CONCENTRIC Loading
*Please Note: These calculations are for TOLCO™ components only. Use of any other components voids these calculations and the listing of the assembly.

Seismic Brace Assembly Detail

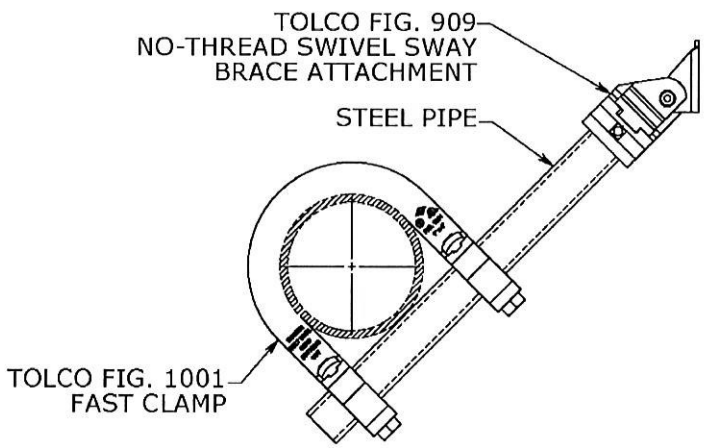

Brace Identification on Plans W1 (3")

Brace Type Lateral [X] Longitudinal [ ] 4-Way [ ]

Sprinkler System Load Calculation (Fpw = CpWp)

Cp = 0.67

Diameter	Type	Length	Total Length	Weight Per Unit Length	Total Weight
3" (80 mm)	Sch. 40	25 ft (7.6 m)	25 ft (7.6 m)	10.82 lb/ft (16.1 kg/m)	270 lbs (122 kg)
1.5" (40 mm)	Sch. 40	130 ft (39.6 m)	130 ft (39.6 m)	3.61 lb/ft (5.37 kg/m)	469 lbs (213 kg)
1" (25 mm)	Sch. 40	15 ft (4.6 m)	15 ft (4.6 m)	2.05 lb/ft (3.05 kg/m)	31 lbs (14 kg)

Subtotal Weight	770 lbs (349 kg)
Wp (incl. 15%)	885 lbs (402 kg)
Total (Fpw)	593 lbs (269 kg)
Maximum Fpw per 9.3.5.5.2 (if applicable)	1278 lb (579 kg)

Main Size	Type/Sch.	Spacing (ft)
3"	Sch. 40	25

TOLBrace™ Seismic Calculation

CHC Puyallup Garage — Job # 23-090

201 W. Main St

Brace Identification	W1 (3")
Brace Type (Per NFPA#13)	NFPA Type F
Braced Pipe (ft)	3" Sch.40 Steel Pipe
Spacing of Brace	25' 0" (7.62 m)
Orientation of Brace	Lateral
Bracing Material	1" Sch.40
Maximum Brace Length	7' 0" (2.13 m)
Slenderness Ratio used for Load Calculation	200
True Angle of Brace for Calculation	60°
Type of Fastener	1/2in. X 3-1/2in. Through-Bolt
Length of Fastener	3-1/2in.

Summary of Pipe within Zone of Influence

3" Sch.40 Steel Pipe (76.2 mm)	25 ft (7.6 m)
1.5" Sch.40 Steel Pipe (38.1 mm)	130 ft (39.6 m)
1" Sch.40 Steel Pipe (25.4 mm)	15 ft (4.6 m)

WASHINGTON STATE
CERTIFICATE OF COMPETENCY
FIRE PROTECTION SPRINKLER SYSTEMS
Theodore M. Queen
4930-0205-C Level 3
Archer Construction, Inc.
ARCHEI*219DR
11-22-23
Date
Signature
Expires DEC 31, 23

G-Factor Used 0.67

Allowance for Heads and Fittings	15%

Conclusions

Total Adjusted Load of Pipe in Zone of Influence	594 lbs (269 kg)
Material Capacity	1604 lbs (728 kg)
Fastener Capacity	600 lbs (272 kg)
Fig. 1001 Clamp	1745 lbs (792 kg)
Fig.909 No-Thread Swivel	1745 lbs (792 kg)
Structural Member	Beam

Calculations prepared by Queen

* The description of the Structural Member is for informational purposes only.
TOLBrace™ software calculates the brace assembly only, not the structure it is attached to.
Calculated with TOLBrace™ 8
Visit us at www.tolco.com

TOLBrace™ Seismic Bracing Calculations

Project Address: CHC Puyallup Garage
201 W. Main St
Puyallup, WA
Job # 23-090

Contractor: Archer Construction
Address: 7855 S. 206th Street
Kent, WA 98032
Phone:
License:

EATON
Powering Business Worldwide

Calculations based on 2016 NFPA Pamphlet #13

Brace Information

Maximum Brace Length	7' 0" (2.134 m)
Diameter of Brace	1" Sch.40
Type of Brace	Sch. 40
Angle of Brace	60° Min.
Least Rad. of Gyration	0.42" (11 mm)
L/R Value	200
Max Horizontal Load	1604 lbs (728 kg)

Fastener Information

Orientation to Connecting Surface NFPA Type F

Fastener

Type	Through-Bolt
Diameter	1/2in.
Length	3-1/2in.
Maximum Load	600 lbs (272 kg)
Prying Factor	N/A

TOLCO™ Brace Components

TOLCO™ Component	Listed Load	Adjusted Loa
Fig. 4L Clamp	2015 lbs (914 kg)	1745 lbs (792 kg)
Fig.909 No-Thread Swivel	2015 lbs (914 kg)	1745 lbs (792 kg)
See Fastener Information		

*Calculation Based on CONCENTRIC Loading
*Please Note: These calculations are for TOLCO™ components only. Use of any other components voids these calculations and the listing of the assembly.

Seismic Brace Assembly Detail

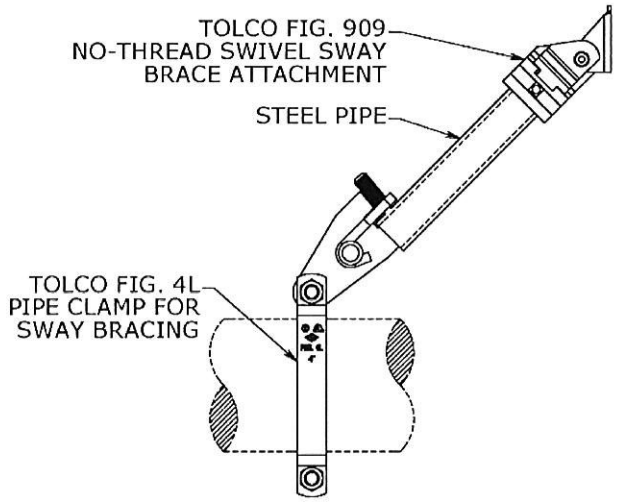

Brace Identification on Plans W2 (4")

Brace Type Lateral [ ] Longitudinal [X] 4-Way [ ]

Sprinkler System Load Calculation (Fpw = CpWp)

Cp = 0.67

Diameter	Type	Length	Total Length	Weight Per Unit Length	Total Weight
4" (100 mm)	Sch. 40	47 ft (14.3 m)	47 ft (14.3 m)	16.4 lb/ft (24.41 kg/m)	771 lbs (350 kg)

Subtotal Weight	771 lbs (350 kg)
Wp (incl. 15%)	887 lbs (402 kg)
Total (Fpw)	594 lbs (269 kg)
Maximum Fpw per 9.3.5.5.2 (if applicable)	N/A

Main Size	Type/Sch.	Spacing (ft)
4"	Sch. 40	47

TOLBrace™ Seismic Calculation

CHC Puyallup Garage — Job # 23-090

201 W. Main St

Brace Identification	W2 (4")
Brace Type (Per NFPA#13)	NFPA Type F
Braced Pipe (ft)	4" Sch.40 Steel Pipe
Spacing of Brace	47' 0" (14.33 m)
Orientation of Brace	Longitudinal
Bracing Material	1" Sch.40
Maximum Brace Length	7' 0" (2.13 m)
Slenderness Ratio used for Load Calculation	200
True Angle of Brace for Calculation	60°
Type of Fastener	1/2in. X 3-1/2in. Through-Bolt
Length of Fastener	3-1/2in.

Summary of Pipe within Zone of Influence

4" Sch.40 Steel Pipe (101.6 mm)	47 ft (14.3 m)

WASHINGTON STATE
CERTIFICATE OF COMPETENCY
FIRE PROTECTION SPRINKLER SYSTEMS
Theodore M. Queen
4930-0205-C Level 3
Archer Construction, Inc.
ARCHEI*219DR
11-22-23 Date
Signature
Expires DEC 31, 23

G-Factor Used 0.67

Allowance for Heads and Fittings	15%

Conclusions

Total Adjusted Load of Pipe in Zone of Influence	594 lbs (269 kg)
Material Capacity	1604 lbs (728 kg)
Fastener Capacity	600 lbs (272 kg)
Fig. 4L Clamp	1745 lbs (792 kg)
Fig.909 No-Thread Swivel	1745 lbs (792 kg)
Structural Member	Wood Beam

Calculations prepared by Queen

* The description of the Structural Member is for informational purposes only.
TOLBrace™ software calculates the brace assembly only, not the structure it is attached to.
Calculated with TOLBrace™ 8
Visit us at www.tolco.com

TOLBrace™ Seismic Bracing Calculations

Project Address: CHC Puyallup Garage
201 W. Main St
Puyallup, WA
Job # 23-090

Contractor: Archer Construction
Address: 7855 S. 206th Street
Kent, WA 98032
Phone:
License:

EATON
Powering Business Worldwide

Calculations based on 2016 NFPA Pamphlet #13

Brace Information

Maximum Brace Length	7' 0" (2.134 m)
Diameter of Brace	1" Sch.40
Type of Brace	Sch. 40
Angle of Brace	60° Min.
Least Rad. of Gyration	0.42" (11 mm)
L/R Value	200
Max Horizontal Load	1604 lbs (728 kg)

Fastener Information

Orientation to Connecting Surface NFPA Type F

Fastener

Type	Through-Bolt
Diameter	1/2in.
Length	3-1/2in.
Maximum Load	600 lbs (272 kg)
Prying Factor	N/A

TOLCO™ Brace Components

TOLCO™ Component	Listed Load	Adjusted Loa
Fig. 4L Clamp	2015 lbs (914 kg)	1745 lbs (792 kg)
Fig.909 No-Thread Swivel	2015 lbs (914 kg)	1745 lbs (792 kg)
See Fastener Information		

*Calculation Based on CONCENTRIC Loading
*Please Note: These calculations are for TOLCO™ components only. Use of any other components voids these calculations and the listing of the assembly.

Seismic Brace Assembly Detail

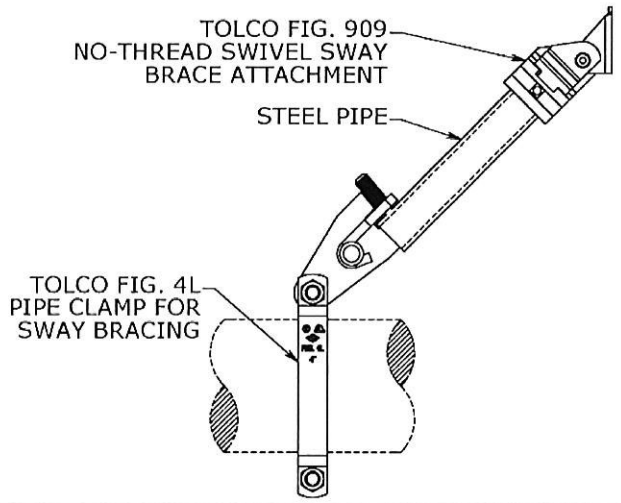

Brace Identification on Plans W2 (3")

Brace Type Lateral [ ] Longitudinal [X] 4-Way [ ]

Sprinkler System Load Calculation (Fpw = CpWp)

Cp = 0.67

Diameter	Type	Length	Total Length	Weight Per Unit Length	Total Weight
3" (80 mm)	Sch. 40	70 ft (21.3 m)	70 ft (21.3 m)	10.82 lb/ft (16.1 kg/m)	757 lbs (343 kg)

Subtotal Weight	757 lbs (343 kg)
Wp (incl. 15%)	871 lbs (395 kg)
Total (Fpw)	583 lbs (265 kg)
Maximum Fpw per 9.3.5.5.2 (if applicable)	N/A

Main Size	Type/Sch.	Spacing (ft)
3"	Sch. 40	70

TOLBrace™ Seismic Calculation

CHC Puyallup Garage — Job # 23-090

201 W. Main St

Brace Identification	W2 (3")
Brace Type (Per NFPA#13)	NFPA Type F
Braced Pipe (ft)	3" Sch.40 Steel Pipe
Spacing of Brace	70' 0" (21.34 m)
Orientation of Brace	Longitudinal
Bracing Material	1" Sch.40
Maximum Brace Length	7' 0" (2.13 m)
Slenderness Ratio used for Load Calculation	200
True Angle of Brace for Calculation	60°
Type of Fastener	1/2in. X 3-1/2in. Through-Bolt
Length of Fastener	3-1/2in.

Summary of Pipe within Zone of Influence

3" Sch.40 Steel Pipe (76.2 mm)	70 ft (21.3 m)

WASHINGTON STATE
CERTIFICATE OF COMPETENCY
FIRE PROTECTION SPRINKLER SYSTEMS
Theodore M. Queen
4930-0205-C Level 3
Archer Construction, Inc.
ARCHEI*219DR
11-22-23
Date
Signature
Expires DEC 31, 23

G-Factor Used 0.67

Allowance for Heads and Fittings	15%

Conclusions

Total Adjusted Load of Pipe in Zone of Influence	584 lbs (265 kg)
Material Capacity	1604 lbs (728 kg)
Fastener Capacity	600 lbs (272 kg)
Fig. 4L Clamp	1745 lbs (792 kg)
Fig.909 No-Thread Swivel	1745 lbs (792 kg)
Structural Member	Wood Beam

Calculations prepared by Queen

* The description of the Structural Member is for informational purposes only.
TOLBrace™ software calculates the brace assembly only, not the structure it is attached to.
Calculated with TOLBrace™ 8
Visit us at www.tolco.com

TOLBrace™ Seismic Bracing Calculations

Project Address: CHC Puyallup Garage
201 W. Main St
Puyallup, WA
Job # 23-090

Contractor: Archer Construction
Address: 7855 S. 206th Street
Kent, WA 98032
Phone:
License:

EATON
Powering Business Worldwide

Calculations based on 2016 NFPA Pamphlet #13

Brace Information

Maximum Brace Length	7' 0" (2.134 m)
Diameter of Brace	1" Sch.40
Type of Brace	Sch. 40
Angle of Brace	60° Min.
Least Rad. of Gyration	0.42" (11 mm)
L/R Value	200
Max Horizontal Load	1604 lbs (728 kg)

Fastener Information

Orientation to Connecting Surface NFPA Type F

Fastener

Type	Lag-Screw
Diameter	1/2in.
Length	5-1/2in.
Maximum Load	610 lbs (277 kg)
Prying Factor	N/A

TOLCO™ Brace Components

TOLCO™ Component	Listed Load	Adjusted Loa
Fig. 1001 Clamp	2015 lbs (914 kg)	1745 lbs (792 kg)
Fig.909 No-Thread Swivel	2015 lbs (914 kg)	1745 lbs (792 kg)
See Fastener Information		

*Calculation Based on CONCENTRIC Loading
*Please Note: These calculations are for TOLCO™ components only. Use of any other components voids these calculations and the listing of the assembly.

Seismic Brace Assembly Detail

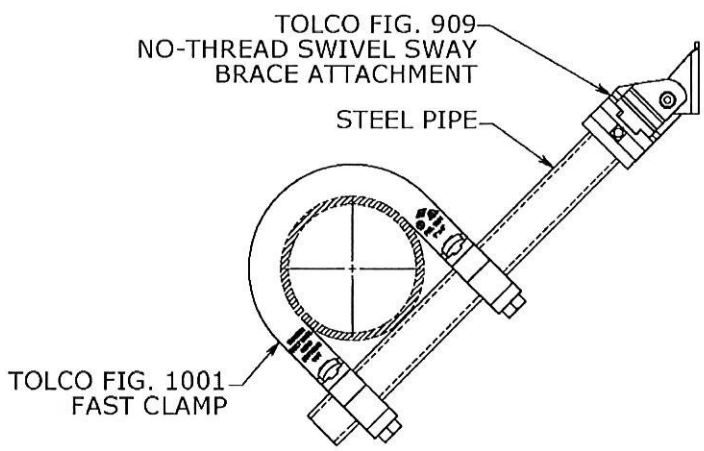

Brace Identification on Plans W3 (4")

Brace Type Lateral [X] Longitudinal [ ] 4-Way [ ]

Sprinkler System Load Calculation (Fpw = CpWp)

Cp = 0.67

Diameter	Type	Length	Total Length	Weight Per Unit Length	Total Weight
4" (100 mm)	Sch. 40	21 ft (6.4 m)	21 ft (6.4 m)	16.4 lb/ft (24.41 kg/m)	344 lbs (156 kg)
1.5" (40 mm)	Sch. 40	115 ft (35.1 m)	115 ft (35.1 m)	3.61 lb/ft (5.37 kg/m)	415 lbs (188 kg)
1" (25 mm)	Sch. 40	9 ft (2.7 m)	9 ft (2.7 m)	2.05 lb/ft (3.05 kg/m)	18 lbs (8 kg)

Subtotal Weight	777 lbs (352 kg)
Wp (incl. 15%)	894 lbs (405 kg)
Total (Fpw)	599 lbs (272 kg)
Maximum Fpw per 9.3.5.5.2 (if applicable)	2385 lb (1081 kg)

Main Size	Type/Sch.	Spacing (ft)
4"	Sch. 40	21

TOLBrace™ Seismic Calculation

CHC Puyallup Garage — Job # 23-090

201 W. Main St

Brace Identification	W3 (4")
Brace Type (Per NFPA#13)	NFPA Type F
Braced Pipe (ft)	4" Sch.40 Steel Pipe
Spacing of Brace	21' 0" (6.4 m)
Orientation of Brace	Lateral
Bracing Material	1" Sch.40
Maximum Brace Length	7' 0" (2.13 m)
Slenderness Ratio used for Load Calculation	200
True Angle of Brace for Calculation	60°
Type of Fastener	1/2in. x 5-1/2in. Lag-Screw
Length of Fastener	5-1/2in.

Summary of Pipe within Zone of Influence

4" Sch.40 Steel Pipe (101.6 mm)	21 ft (6.4 m)
1.5" Sch.40 Steel Pipe (38.1 mm)	115 ft (35.1 m)
1" Sch.40 Steel Pipe (25.4 mm)	9 ft (2.7 m)

WASHINGTON STATE
CERTIFICATE OF COMPETENCY
FIRE PROTECTION SPRINKLER SYSTEMS
Theodore M. Queen
4930-0205-C Level 3
Archer Construction, Inc.
ARCHEI*219DR
11-22-23
Date
Signature
Expires DEC 31, 23

G-Factor Used 0.67

Allowance for Heads and Fittings	15%

Conclusions

Total Adjusted Load of Pipe in Zone of Influence	599 lbs (272 kg)
Material Capacity	1604 lbs (728 kg)
Fastener Capacity	610 lbs (277 kg)
Fig. 1001 Clamp	1745 lbs (792 kg)
Fig.909 No-Thread Swivel	1745 lbs (792 kg)
Structural Member	Beam

Calculations prepared by Queen

* The description of the Structural Member is for informational purposes only.
TOLBrace™ software calculates the brace assembly only, not the structure it is attached to.
Calculated with TOLBrace™ 8
Visit us at www.tolco.com

TOLBrace™ Seismic Bracing Calculations

Project Address: CHC Puyallup Garage
201 W. Main St
Puyallup, WA
Job # 23-090

Contractor: Archer Construction
Address: 7855 S. 206th Street
Kent, WA 98032
Phone:
License:

EATON
Powering Business Worldwide

Calculations based on 2016 NFPA Pamphlet #13

Brace Information

Maximum Brace Length	7' 0" (2.134 m)
Diameter of Brace	1" Sch.40
Type of Brace	Sch. 40
Angle of Brace	60° Min.
Least Rad. of Gyration	0.42" (11 mm)
L/R Value	200
Max Horizontal Load	1604 lbs (728 kg)

Fastener Information

Orientation to Connecting Surface NFPA Type F

Fastener

Type	Lag-Screw
Diameter	1/2in.
Length	5-1/2in.
Maximum Load	610 lbs (277 kg)

Prying Factor N/A

TOLCO™ Brace Components

TOLCO™ Component	Listed Load	Adjusted Loa
Fig. 1001 Clamp	2015 lbs (914 kg)	1745 lbs (792 kg)
Fig.909 No-Thread Swivel	2015 lbs (914 kg)	1745 lbs (792 kg)
See Fastener Information		

*Calculation Based on CONCENTRIC Loading
*Please Note: These calculations are for TOLCO™ components only. Use of any other components voids these calculations and the listing of the assembly.

Seismic Brace Assembly Detail

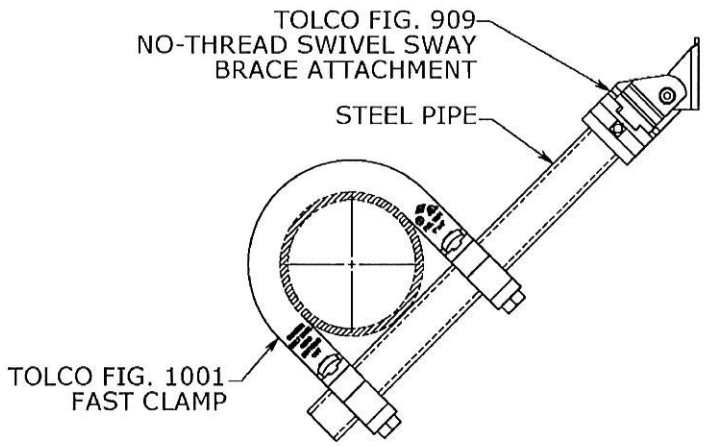

Brace Identification on Plans W3 (4") Alternate

Brace Type Lateral [X] Longitudinal [ ] 4-Way [ ]

Sprinkler System Load Calculation (Fpw = CpWp)
Cp = 0.67

Diameter	Type	Length	Total Length	Weight Per Unit Length	Total Weight
4" (100 mm)	Sch. 40	25 ft (7.6 m)	25 ft (7.6 m)	16.4 lb/ft (24.41 kg/m)	410 lbs (186 kg)
1.5" (40 mm)	Sch. 40	99 ft (30.2 m)	99 ft (30.2 m)	3.61 lb/ft (5.37 kg/m)	357 lbs (162 kg)
1" (25 mm)	Sch. 40	5 ft (1.5 m)	5 ft (1.5 m)	2.05 lb/ft (3.05 kg/m)	10 lbs (5 kg)

Subtotal Weight	777 lbs (352 kg)
Wp (incl. 15%)	894 lbs (405 kg)
Total (Fpw)	599 lbs (272 kg)
Maximum Fpw per 9.3.5.5.2 (if applicable)	2385 lb (1081 kg)

Main Size	Type/Sch.	Spacing (ft)
4"	Sch. 40	25

TOLBrace™ Seismic Calculation

CHC Puyallup Garage — Job # 23-090

201 W. Main St

Brace Identification	W3 (4") Alternate
Brace Type (Per NFPA#13)	NFPA Type F
Braced Pipe (ft)	4" Sch.40 Steel Pipe
Spacing of Brace	25' 0" (7.62 m)
Orientation of Brace	Lateral
Bracing Material	1" Sch.40
Maximum Brace Length	7' 0" (2.13 m)
Slenderness Ratio used for Load Calculation	200
True Angle of Brace for Calculation	60°
Type of Fastener	1/2in. x 5-1/2in. Lag-Screw
Length of Fastener	5-1/2in.

Summary of Pipe within Zone of Influence

4" Sch.40 Steel Pipe (101.6 mm)	25 ft (7.6 m)
1.5" Sch.40 Steel Pipe (38.1 mm)	99 ft (30.2 m)
1" Sch.40 Steel Pipe (25.4 mm)	5 ft (1.5 m)

WASHINGTON STATE
CERTIFICATE OF COMPETENCY
FIRE PROTECTION SPRINKLER SYSTEMS
Theodore M. Queen
4930-0205-C Level 3
Archer Construction, Inc.
ARCHEI*219DR
11-22-23
Date
Signature
Expires DEC 31, 23

G-Factor Used 0.67

Allowance for Heads and Fittings	15%

Conclusions

Total Adjusted Load of Pipe in Zone of Influence	599 lbs (272 kg)
Material Capacity	1604 lbs (728 kg)
Fastener Capacity	610 lbs (277 kg)
Fig. 1001 Clamp	1745 lbs (792 kg)
Fig.909 No-Thread Swivel	1745 lbs (792 kg)
Structural Member	Beam

Calculations prepared by Queen

* The description of the Structural Member is for informational purposes only.
TOLBrace™ software calculates the brace assembly only, not the structure it is attached to.
Calculated with TOLBrace™ 8
Visit us at www.tolco.com

TOLBrace™ Seismic Bracing Calculations

Project Address: CHC Puyallup Garage
201 W. Main St
Puyallup, WA
Job # 23-090

Contractor: Archer Construction
Address: 7855 S. 206th Street
Kent, WA 98032
Phone:
License:

EATON
Powering Business Worldwide

Calculations based on 2016 NFPA Pamphlet #13

Brace Information

Maximum Brace Length	7' 0" (2.134 m)
Diameter of Brace	1" Sch.40
Type of Brace	Sch. 40
Angle of Brace	60° Min.
Least Rad. of Gyration	0.42" (11 mm)
L/R Value	200
Max Horizontal Load	1604 lbs (728 kg)

Fastener Information

Orientation to Connecting Surface	NFPA Type F
Fastener	
Type	Lag-Screw
Diameter	1/2in.
Length	5-1/2in.
Maximum Load	610 lbs (277 kg)
Prying Factor	N/A

TOLCO™ Brace Components

TOLCO™ Component	Listed Load	Adjusted Loa
Fig. 1001 Clamp	2015 lbs (914 kg)	1745 lbs (792 kg)
Fig.909 No-Thread Swivel	2015 lbs (914 kg)	1745 lbs (792 kg)
See Fastener Information		

*Calculation Based on CONCENTRIC Loading
*Please Note: These calculations are for TOLCO™ components only. Use of any other components voids these calculations and the listing of the assembly.

Seismic Brace Assembly Detail

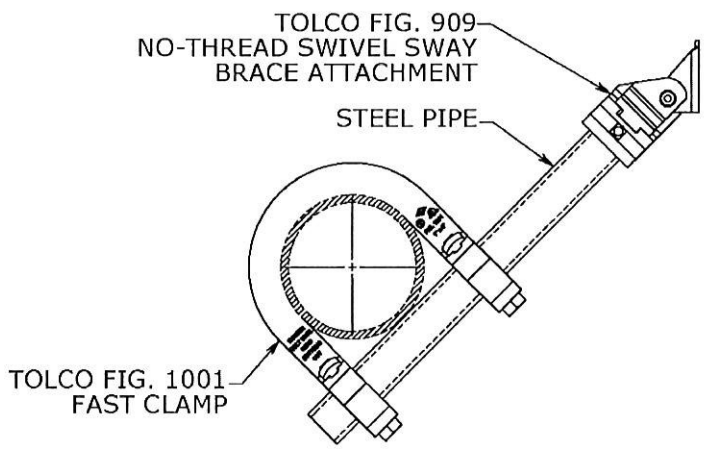

Brace Identification on Plans W3 (3")

Brace Type Lateral [X] Longitudinal [ ] 4-Way [ ]

Sprinkler System Load Calculation (Fpw = CpWp)

Cp = 0.67

Diameter	Type	Length	Total Length	Weight Per Unit Length	Total Weight
3" (80 mm)	Sch. 40	25 ft (7.6 m)	25 ft (7.6 m)	10.82 lb/ft (16.1 kg/m)	270 lbs (122 kg)
1.5" (40 mm)	Sch. 40	130 ft (39.6 m)	130 ft (39.6 m)	3.61 lb/ft (5.37 kg/m)	469 lbs (213 kg)
1" (25 mm)	Sch. 40	15 ft (4.6 m)	15 ft (4.6 m)	2.05 lb/ft (3.05 kg/m)	31 lbs (14 kg)

Subtotal Weight	770 lbs (349 kg)
Wp (incl. 15%)	885 lbs (402 kg)
Total (Fpw)	593 lbs (269 kg)
Maximum Fpw per 9.3.5.5.2 (if applicable)	1278 lb (579 kg)

Main Size	Type/Sch.	Spacing (ft)
3"	Sch. 40	25

TOLBrace™ Seismic Calculation

CHC Puyallup Garage — Job # 23-090

201 W. Main St

Brace Identification	W3 (3")
Brace Type (Per NFPA#13)	NFPA Type F
Braced Pipe (ft)	3" Sch.40 Steel Pipe
Spacing of Brace	25' 0" (7.62 m)
Orientation of Brace	Lateral
Bracing Material	1" Sch.40
Maximum Brace Length	7' 0" (2.13 m)
Slenderness Ratio used for Load Calculation	200
True Angle of Brace for Calculation	60°
Type of Fastener	1/2in. x 5-1/2in. Lag-Screw
Length of Fastener	5-1/2in.

Summary of Pipe within Zone of Influence

3" Sch.40 Steel Pipe (76.2 mm)	25 ft (7.6 m)
1.5" Sch.40 Steel Pipe (38.1 mm)	130 ft (39.6 m)
1" Sch.40 Steel Pipe (25.4 mm)	15 ft (4.6 m)

WASHINGTON STATE
CERTIFICATE OF COMPETENCY
FIRE PROTECTION SPRINKLER SYSTEMS
Theodore M. Queen
4930-0205-C Level 3
Archer Construction, Inc.
ARCHEI*219DR
11-22-23
Date
Signature
Expires DEC 31, 23

G-Factor Used 0.67	
Allowance for Heads and Fittings	15%
Conclusions	
Total Adjusted Load of Pipe in Zone of Influence	594 lbs (269 kg)
Material Capacity	1604 lbs (728 kg)
Fastener Capacity	610 lbs (277 kg)
Fig. 1001 Clamp	1745 lbs (792 kg)
Fig.909 No-Thread Swivel	1745 lbs (792 kg)
Structural Member	Beam

Calculations prepared by Queen

* The description of the Structural Member is for informational purposes only.
TOLBrace™ software calculates the brace assembly only, not the structure it is attached to.
Calculated with TOLBrace™ 8
Visit us at www.tolco.com

TOLBrace™ Seismic Bracing Calculations

Project Address: CHC Puyallup Garage
201 W. Main St
Puyallup, WA
Job # 23-090

Contractor: Archer Construction
Address: 7855 S. 206th Street
Kent, WA 98032
Phone:
License:

EATON
Powering Business Worldwide

Calculations based on 2016 NFPA Pamphlet #13

Brace Information

Maximum Brace Length	7' 0" (2.134 m)
Diameter of Brace	1" Sch.40
Type of Brace	Sch. 40
Angle of Brace	60° Min.
Least Rad. of Gyration	0.42" (11 mm)
L/R Value	200
Max Horizontal Load	1604 lbs (728 kg)

Fastener Information

Orientation to Connecting Surface	NFPA Type F
Fastener	
Type	Lag-Screw
Diameter	1/2in.
Length	5-1/2in.
Maximum Load	610 lbs (277 kg)
Prying Factor	N/A

TOLCO™ Brace Components

TOLCO™ Component	Listed Load	Adjusted Loa
Fig. 4L Clamp	2015 lbs (914 kg)	1745 lbs (792 kg)
Fig.909 No-Thread Swivel	2015 lbs (914 kg)	1745 lbs (792 kg)
See Fastener Information		

*Calculation Based on CONCENTRIC Loading
*Please Note: These calculations are for TOLCO™ components only. Use of any other components voids these calculations and the listing of the assembly.

Seismic Brace Assembly Detail

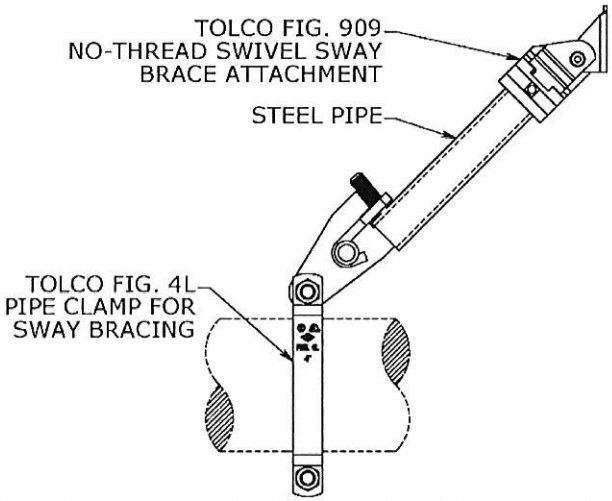

Brace Identification on Plans W4 (4")

Brace Type Lateral [ ] Longitudinal [X] 4-Way [ ]

Sprinkler System Load Calculation (Fpw = CpWp)

Cp = 0.67

Diameter	Type	Length	Total Length	Weight Per Unit Length	Total Weight
4" (100 mm)	Sch. 40	47 ft (14.3 m)	47 ft (14.3 m)	16.4 lb/ft (24.41 kg/m)	771 lbs (350 kg)

Subtotal Weight	771 lbs (350 kg)
Wp (incl. 15%)	887 lbs (402 kg)
Total (Fpw)	594 lbs (269 kg)
Maximum Fpw per 9.3.5.5.2 (if applicable)	N/A

Main Size	Type/Sch.	Spacing (ft)
4"	Sch. 40	47

TOLBrace™ Seismic Calculation

CHC Puyallup Garage — Job # 23-090

201 W. Main St

Brace Identification	W4 (4")
Brace Type (Per NFPA#13)	NFPA Type F
Braced Pipe (ft)	4" Sch.40 Steel Pipe
Spacing of Brace	47' 0" (14.33 m)
Orientation of Brace	Longitudinal
Bracing Material	1" Sch.40
Maximum Brace Length	7' 0" (2.13 m)
Slenderness Ratio used for Load Calculation	200
True Angle of Brace for Calculation	60°
Type of Fastener	1/2in. x 5-1/2in. Lag-Screw
Length of Fastener	5-1/2in.

Summary of Pipe within Zone of Influence

4" Sch.40 Steel Pipe (101.6 mm)	47 ft (14.3 m)

WASHINGTON STATE
CERTIFICATE OF COMPETENCY
FIRE PROTECTION SPRINKLER SYSTEMS
Theodore M. Queen
4930-0205-C Level 3
Archer Construction, Inc.
ARCHEI*219DR
11-22-23
Date
Signature
Expires DEC 31, 23

G-Factor Used 0.67

Allowance for Heads and Fittings	15%

Conclusions

Total Adjusted Load of Pipe in Zone of Influence	594 lbs (269 kg)
Material Capacity	1604 lbs (728 kg)
Fastener Capacity	610 lbs (277 kg)
Fig. 4L Clamp	1745 lbs (792 kg)
Fig.909 No-Thread Swivel	1745 lbs (792 kg)
Structural Member	Wood Beam

Calculations prepared by Queen

* The description of the Structural Member is for informational purposes only.
TOLBrace™ software calculates the brace assembly only, not the structure it is attached to.
Calculated with TOLBrace™ 8
Visit us at www.tolco.com

TOLBrace™ Seismic Bracing Calculations

Project Address: CHC Puyallup Garage
201 W. Main St
Puyallup, WA
Job # 23-090

Contractor: Archer Construction
Address: 7855 S. 206th Street
Kent, WA 98032
Phone:
License:

EATON
Powering Business Worldwide

Calculations based on 2016 NFPA Pamphlet #13

Brace Information

Maximum Brace Length	7' 0" (2.134 m)
Diameter of Brace	1" Sch.40
Type of Brace	Sch. 40
Angle of Brace	60° Min.
Least Rad. of Gyration	0.42" (11 mm)
L/R Value	200
Max Horizontal Load	1604 lbs (728 kg)

Fastener Information

Orientation to Connecting Surface NFPA Type F

Fastener

Type	Lag-Screw
Diameter	1/2in.
Length	5-1/2in.
Maximum Load	610 lbs (277 kg)
Prying Factor	N/A

TOLCO™ Brace Components

TOLCO™ Component	Listed Load	Adjusted Loa
Fig. 4L Clamp	2015 lbs (914 kg)	1745 lbs (792 kg)
Fig.909 No-Thread Swivel	2015 lbs (914 kg)	1745 lbs (792 kg)
See Fastener Information		

*Calculation Based on CONCENTRIC Loading
*Please Note: These calculations are for TOLCO™ components only. Use of any other components voids these calculations and the listing of the assembly.

Seismic Brace Assembly Detail

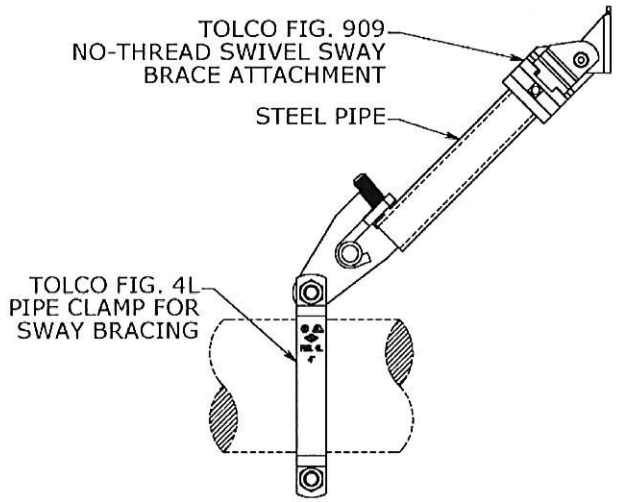

Brace Identification on Plans W4 (3")

Brace Type Lateral [ ] Longitudinal [X] 4-Way [ ]

Sprinkler System Load Calculation (Fpw = CpWp)

Cp = 0.67

Diameter	Type	Length	Total Length	Weight Per Unit Length	Total Weight
3" (80 mm)	Sch. 40	70 ft (21.3 m)	70 ft (21.3 m)	10.82 lb/ft (16.1 kg/m)	757 lbs (343 kg)

Subtotal Weight	757 lbs (343 kg)
Wp (incl. 15%)	871 lbs (395 kg)
Total (Fpw)	583 lbs (265 kg)
Maximum Fpw per 9.3.5.5.2 (if applicable)	N/A

Main Size	Type/Sch.	Spacing (ft)
3"	Sch. 40	70

TOLBrace™ Seismic Calculation

CHC Puyallup Garage — Job # 23-090

201 W. Main St

Brace Identification	W4 (3")
Brace Type (Per NFPA#13)	NFPA Type F
Braced Pipe (ft)	3" Sch.40 Steel Pipe
Spacing of Brace	70' 0" (21.34 m)
Orientation of Brace	Longitudinal
Bracing Material	1" Sch.40
Maximum Brace Length	7' 0" (2.13 m)
Slenderness Ratio used for Load Calculation	200
True Angle of Brace for Calculation	60°
Type of Fastener	1/2in. x 5-1/2in. Lag-Screw
Length of Fastener	5-1/2in.

Summary of Pipe within Zone of Influence

3" Sch.40 Steel Pipe (76.2 mm)	70 ft (21.3 m)

WASHINGTON STATE
CERTIFICATE OF COMPETENCY
FIRE PROTECTION SPRINKLER SYSTEMS
Theodore M. Queen
4930-0205-C Level 3
Archer Construction, Inc.
ARCHEI*219DR
11-22-23
Date
Signature
Expires DEC 31, 23

G-Factor Used 0.67

Allowance for Heads and Fittings	15%

Conclusions

Total Adjusted Load of Pipe in Zone of Influence	584 lbs (265 kg)
Material Capacity	1604 lbs (728 kg)
Fastener Capacity	610 lbs (277 kg)
Fig. 4L Clamp	1745 lbs (792 kg)
Fig.909 No-Thread Swivel	1745 lbs (792 kg)
Structural Member	Wood Beam

Calculations prepared by Queen

* The description of the Structural Member is for informational purposes only.
TOLBrace™ software calculates the brace assembly only, not the structure it is attached to.
Calculated with TOLBrace™ 8
Visit us at www.tolco.com

TOLBrace™ Seismic Bracing Calculations

Project Address: CHC Puyallup Garage
201 W. Main St
Puyallup, WA
Job # 23-090

Contractor: Archer Construction
Address: 7855 S. 206th Street
Kent, WA 98032
Phone:
License:

EATON
Powering Business Worldwide

Calculations based on 2016 NFPA Pamphlet #13

Brace Information

Maximum Brace Length	7' 0" (2.134 m)
Diameter of Brace	1" Sch.40
Type of Brace	Sch. 40
Angle of Brace	60° Min.
Least Rad. of Gyration	0.42" (11 mm)
L/R Value	200
Max Horizontal Load	1604 lbs (728 kg)

Fastener Information

Orientation to Connecting Surface NFPA Type I

Fastener

Type	Through-Bolt
Diameter	1/2in.
Length	3-1/2in.
Maximum Load	485 lbs (220 kg)
Prying Factor	N/A

TOLCO™ Brace Components

TOLCO™ Component	Listed Load	Adjusted Loa
Fig. 4L Clamp	2015 lbs (914 kg)	1745 lbs (792 kg)
Fig.909 No-Thread Swivel	2015 lbs (914 kg)	1745 lbs (792 kg)
See Fastener Information		

*Calculation Based on CONCENTRIC Loading
*Please Note: These calculations are for TOLCO™ components only. Use of any other components voids these calculations and the listing of the assembly.

Seismic Brace Assembly Detail

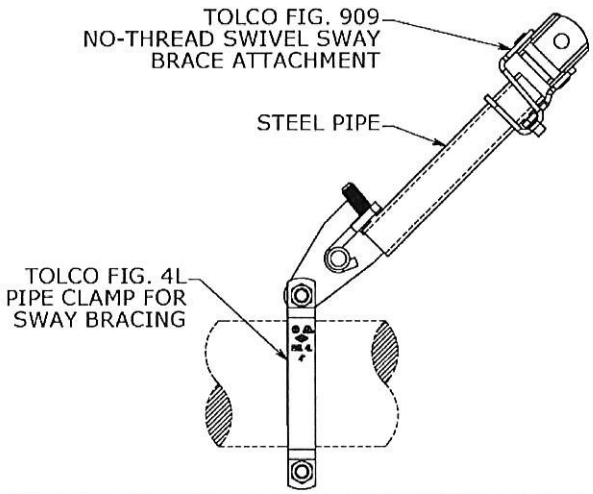

Brace Identification on Plans W6 (4")

Brace Type Lateral [ ] Longitudinal [X] 4-Way [ ]

Sprinkler System Load Calculation (Fpw = CpWp)
Cp = 0.67

Diameter	Type	Length	Total Length	Weight Per Unit Length	Total Weight
4" (100 mm)	Sch. 40	38 ft (11.6 m)	38 ft (11.6 m)	16.4 lb/ft (24.41 kg/m)	623 lbs (283 kg)

Subtotal Weight	623 lbs (283 kg)
Wp (incl. 15%)	716 lbs (325 kg)
Total (Fpw)	480 lbs (218 kg)
Maximum Fpw per 9.3.5.5.2 (if applicable)	N/A

Main Size	Type/Sch.	Spacing (ft)
4"	Sch. 40	38

TOLBrace™ Seismic Calculation

CHC Puyallup Garage — Job # 23-090

201 W. Main St

Brace Identification	W6 (4")
Brace Type (Per NFPA#13)	NFPA Type I
Braced Pipe (ft)	4" Sch.40 Steel Pipe
Spacing of Brace	38' 0" (11.58 m)
Orientation of Brace	Longitudinal
Bracing Material	1" Sch.40
Maximum Brace Length	7' 0" (2.13 m)
Slenderness Ratio used for Load Calculation	200
True Angle of Brace for Calculation	60°
Type of Fastener	1/2in. X 3-1/2in. Through-Bolt
Length of Fastener	3-1/2in.

Summary of Pipe within Zone of Influence

4" Sch.40 Steel Pipe (101.6 mm)	38 ft (11.6 m)

WASHINGTON STATE
CERTIFICATE OF COMPETENCY
FIRE PROTECTION SPRINKLER SYSTEMS
Theodore M. Queen
4930-0205-C Level 3
Archer Construction, Inc.
ARCHEI*219DR
11-22-23 Date
Signature
Expires DEC 31, 23

G-Factor Used 0.67

Allowance for Heads and Fittings	15%

Conclusions

Total Adjusted Load of Pipe in Zone of Influence	480 lbs (218 kg)
Material Capacity	1604 lbs (728 kg)
Fastener Capacity	485 lbs (220 kg)
Fig. 4L Clamp	1745 lbs (792 kg)
Fig.909 No-Thread Swivel	1745 lbs (792 kg)
Structural Member	Wood Beam

Calculations prepared by Queen

* The description of the Structural Member is for informational purposes only.
TOLBrace™ software calculates the brace assembly only, not the structure it is attached to.
Calculated with TOLBrace™ 8
Visit us at www.tolco.com

TOLBrace™ Seismic Bracing Calculations

Project Address: CHC Puyallup Garage
201 W. Main St
Puyallup, WA
Job # 23-090

Contractor: Archer Construction
Address: 7855 S. 206th Street
Kent, WA 98032
Phone:
License:

EATON
Powering Business Worldwide

Calculations based on 2016 NFPA Pamphlet #13

Brace Information

Maximum Brace Length	7' 0" (2.134 m)
Diameter of Brace	1" Sch.40
Type of Brace	Sch. 40
Angle of Brace	60° Min.
Least Rad. of Gyration	0.42" (11 mm)
L/R Value	200
Max Horizontal Load	1604 lbs (728 kg)

Fastener Information

Orientation to Connecting Surface	NFPA Type I
Fastener	
Type	Through-Bolt
Diameter	1/2in.
Length	3-1/2in.
Maximum Load	485 lbs (220 kg)
Prying Factor	N/A

TOLCO™ Brace Components

TOLCO™ Component	Listed Load	Adjusted Loa
Fig. 4L Clamp	2015 lbs (914 kg)	1745 lbs (792 kg)
Fig.909 No-Thread Swivel	2015 lbs (914 kg)	1745 lbs (792 kg)
See Fastener Information		

*Calculation Based on CONCENTRIC Loading
*Please Note: These calculations are for TOLCO™ components only. Use of any other components voids these calculations and the listing of the assembly.

Seismic Brace Assembly Detail

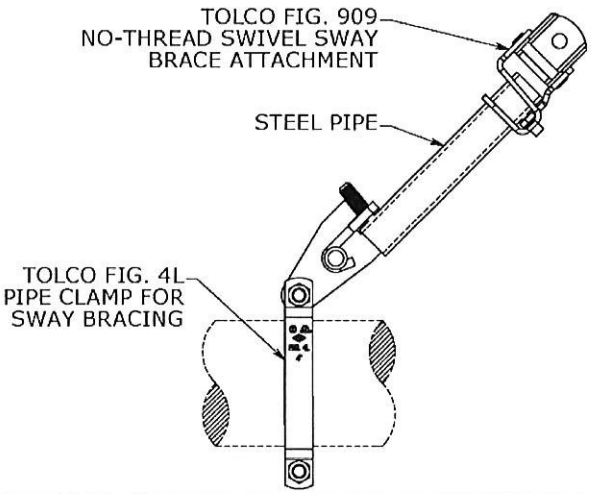

Brace Identification on Plans W6 (3")

Brace Type Lateral [ ] Longitudinal [X] 4-Way [ ]

Sprinkler System Load Calculation (Fpw = CpWp)

Cp = 0.67

Diameter	Type	Length	Total Length	Weight Per Unit Length	Total Weight
3" (80 mm)	Sch. 40	57 ft (17.4 m)	57 ft (17.4 m)	10.82 lb/ft (16.1 kg/m)	617 lbs (280 kg)

Subtotal Weight	617 lbs (280 kg)
Wp (incl. 15%)	710 lbs (322 kg)
Total (Fpw)	475 lbs (216 kg)
Maximum Fpw per 9.3.5.5.2 (if applicable)	N/A

Main Size	Type/Sch.	Spacing (ft)
3"	Sch. 40	57

TOLBrace™ Seismic Calculation

CHC Puyallup Garage — Job # 23-090

201 W. Main St

Brace Identification	W6 (3")
Brace Type (Per NFPA#13)	NFPA Type I
Braced Pipe (ft)	3" Sch.40 Steel Pipe
Spacing of Brace	57' 0" (17.37 m)
Orientation of Brace	Longitudinal
Bracing Material	1" Sch.40
Maximum Brace Length	7' 0" (2.13 m)
Slenderness Ratio used for Load Calculation	200
True Angle of Brace for Calculation	60°
Type of Fastener	1/2in. X 3-1/2in. Through-Bolt
Length of Fastener	3-1/2in.

Summary of Pipe within Zone of Influence

3" Sch.40 Steel Pipe (76.2 mm)	57 ft (17.4 m)

WASHINGTON STATE
CERTIFICATE OF COMPETENCY
FIRE PROTECTION SPRINKLER SYSTEMS
Theodore M. Queen
4930-0205-C Level 3
Archer Construction, Inc.
ARCHEI*219DR
11-22-23
Date
Signature
Expires DEC 31, 23

G-Factor Used 0.67

Allowance for Heads and Fittings	15%

Conclusions

Total Adjusted Load of Pipe in Zone of Influence	475 lbs (215 kg)
Material Capacity	1604 lbs (728 kg)
Fastener Capacity	485 lbs (220 kg)
Fig. 4L Clamp	1745 lbs (792 kg)
Fig.909 No-Thread Swivel	1745 lbs (792 kg)
Structural Member	Wood Beam

Calculations prepared by Queen

* The description of the Structural Member is for informational purposes only.
TOLBrace™ software calculates the brace assembly only, not the structure it is attached to.
Calculated with TOLBrace™ 8
Visit us at www.tolco.com

TOLBrace™ Seismic Bracing Calculations

Project Address: CHC Puyallup Garage
201 W. Main St
Puyallup, WA
Job # 23-090

Contractor: Archer Construction
Address: 7855 S. 206th Street
Kent, WA 98032
Phone:
License:

EATON
Powering Business Worldwide

Calculations based on 2016 NFPA Pamphlet #13

Brace Information

Maximum Brace Length	7' 0" (2.134 m)
Diameter of Brace	1" Sch.40
Type of Brace	Sch. 40
Angle of Brace	60° Min.
Least Rad. of Gyration	0.42" (11 mm)
L/R Value	200
Max Horizontal Load	1604 lbs (728 kg)

Fastener Information

Orientation to Connecting Surface NFPA Type I

Fastener

Type	Lag-Screw
Diameter	1/2in.
Length	4-1/2in.
Maximum Load	325 lbs (147 kg)
Prying Factor	N/A

TOLCO™ Brace Components

TOLCO™ Component	Listed Load	Adjusted Loa
Fig. 4L Clamp	2015 lbs (914 kg)	1745 lbs (792 kg)
Fig.909 No-Thread Swivel	2015 lbs (914 kg)	1745 lbs (792 kg)
See Fastener Information		

*Calculation Based on CONCENTRIC Loading
*Please Note: These calculations are for TOLCO™ components only. Use of any other components voids these calculations and the listing of the assembly.

Seismic Brace Assembly Detail

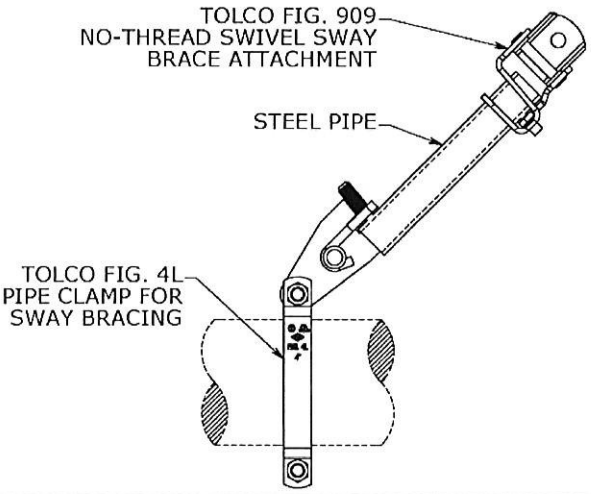

Brace Identification on Plans W8 (4")

Brace Type Lateral [ ] Longitudinal [X] 4-Way [ ]

Sprinkler System Load Calculation (Fpw = CpWp)

Cp = 0.67

Diameter	Type	Length	Total Length	Weight Per Unit Length	Total Weight
4" (100 mm)	Sch. 40	25 ft (7.6 m)	25 ft (7.6 m)	16.4 lb/ft (24.41 kg/m)	410 lbs (186 kg)

Subtotal Weight	410 lbs (186 kg)
Wp (incl. 15%)	471 lbs (214 kg)
Total (Fpw)	316 lbs (143 kg)
Maximum Fpw per 9.3.5.5.2 (if applicable)	N/A

Main Size	Type/Sch.	Spacing (ft)
4"	Sch. 40	25

TOLBrace™ Seismic Calculation

CHC Puyallup Garage — Job # 23-090

201 W. Main St

Brace Identification	W8 (4")
Brace Type (Per NFPA#13)	NFPA Type I
Braced Pipe (ft)	4" Sch.40 Steel Pipe
Spacing of Brace	25' 0" (7.62 m)
Orientation of Brace	Longitudinal
Bracing Material	1" Sch.40
Maximum Brace Length	7' 0" (2.13 m)
Slenderness Ratio used for Load Calculation	200
True Angle of Brace for Calculation	60°
Type of Fastener	1/2in. x 4-1/2in. Lag-Screw
Length of Fastener	4-1/2in.

Summary of Pipe within Zone of Influence

4" Sch.40 Steel Pipe (101.6 mm)	25 ft (7.6 m)

WASHINGTON STATE
CERTIFICATE OF COMPETENCY
FIRE PROTECTION SPRINKLER SYSTEMS
Theodore M. Queen
4930-0205-C Level 3
Archer Construction, Inc.
ARCHEI*219DR
11-22-23
Date
Signature
Expires DEC 31, 23

G-Factor Used 0.67

Allowance for Heads and Fittings	15%

Conclusions

Total Adjusted Load of Pipe in Zone of Influence	316 lbs (143 kg)
Material Capacity	1604 lbs (728 kg)
Fastener Capacity	325 lbs (147 kg)
Fig. 4L Clamp	1745 lbs (792 kg)
Fig.909 No-Thread Swivel	1745 lbs (792 kg)
Structural Member	Wood Beam

Calculations prepared by Queen

* The description of the Structural Member is for informational purposes only.
TOLBrace™ software calculates the brace assembly only, not the structure it is attached to.
Calculated with TOLBrace™ 8
Visit us at www.tolco.com

TOLBrace™ Seismic Bracing Calculations

Project Address: CHC Puyallup Garage
201 W. Main St
Puyallup, WA
Job # 23-090

Contractor: Archer Construction
Address: 7855 S. 206th Street
Kent, WA 98032
Phone:
License:

EATON
Powering Business Worldwide

Calculations based on 2016 NFPA Pamphlet #13

Brace Information

Maximum Brace Length	7' 0" (2.134 m)
Diameter of Brace	1" Sch.40
Type of Brace	Sch. 40
Angle of Brace	60° Min.
Least Rad. of Gyration	0.42" (11 mm)
L/R Value	200
Max Horizontal Load	1604 lbs (728 kg)

Fastener Information

Orientation to Connecting Surface NFPA Type I

Fastener

Type	Lag-Screw
Diameter	1/2in.
Length	4-1/2in.
Maximum Load	325 lbs (147 kg)
Prying Factor	N/A

TOLCO™ Brace Components

TOLCO™ Component	Listed Load	Adjusted Loa
Fig. 4L Clamp	2015 lbs (914 kg)	1745 lbs (792 kg)
Fig.909 No-Thread Swivel	2015 lbs (914 kg)	1745 lbs (792 kg)
See Fastener Information		

*Calculation Based on CONCENTRIC Loading
*Please Note: These calculations are for TOLCO™ components only. Use of any other components voids these calculations and the listing of the assembly.

Seismic Brace Assembly Detail

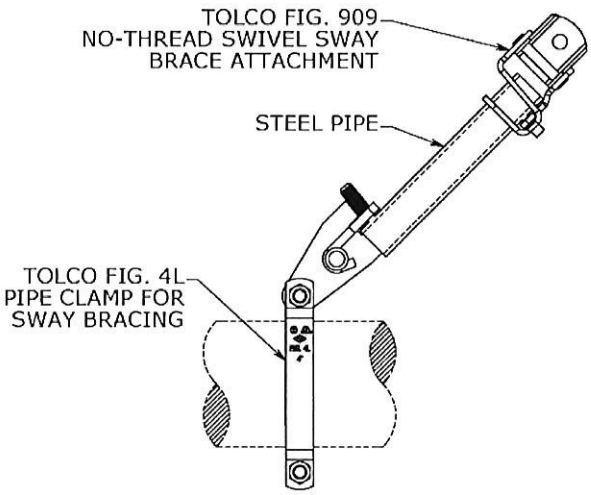

Brace Identification on Plans W8 (3")

Brace Type Lateral [ ] Longitudinal [X] 4-Way [ ]

Sprinkler System Load Calculation (Fpw = CpWp)

Cp = 0.67

Diameter	Type	Length	Total Length	Weight Per Unit Length	Total Weight
3" (80 mm)	Sch. 40	38 ft (11.6 m)	38 ft (11.6 m)	10.82 lb/ft (16.1 kg/m)	411 lbs (186 kg)

Subtotal Weight	411 lbs (186 kg)
Wp (incl. 15%)	473 lbs (214 kg)
Total (Fpw)	317 lbs (144 kg)
Maximum Fpw per 9.3.5.5.2 (if applicable)	N/A

Main Size	Type/Sch.	Spacing (ft)
3"	Sch. 40	38

TOLBrace™ Seismic Calculation

CHC Puyallup Garage — Job # 23-090

201 W. Main St

Brace Identification	W8 (3")
Brace Type (Per NFPA#13)	NFPA Type I
Braced Pipe (ft)	3" Sch.40 Steel Pipe
Spacing of Brace	38' 0" (11.58 m)
Orientation of Brace	Longitudinal
Bracing Material	1" Sch.40
Maximum Brace Length	7' 0" (2.13 m)
Slenderness Ratio used for Load Calculation	200
True Angle of Brace for Calculation	60°
Type of Fastener	1/2in. x 4-1/2in. Lag-Screw
Length of Fastener	4-1/2in.

Summary of Pipe within Zone of Influence

3" Sch.40 Steel Pipe (76.2 mm)	38 ft (11.6 m)

WASHINGTON STATE
CERTIFICATE OF COMPETENCY
FIRE PROTECTION SPRINKLER SYSTEMS
Theodore M. Queen
4930-0205-C Level 3
Archer Construction, Inc.
ARCHEI*219DR
11-22-23
Date
Signature
Expires DEC 31, 23

G-Factor Used 0.67

Allowance for Heads and Fittings	15%

Conclusions

Total Adjusted Load of Pipe in Zone of Influence	317 lbs (144 kg)
Material Capacity	1604 lbs (728 kg)
Fastener Capacity	325 lbs (147 kg)
Fig. 4L Clamp	1745 lbs (792 kg)
Fig.909 No-Thread Swivel	1745 lbs (792 kg)
Structural Member	Wood Beam

Calculations prepared by Queen

* The description of the Structural Member is for informational purposes only.
TOLBrace™ software calculates the brace assembly only, not the structure it is attached to.
Calculated with TOLBrace™ 8
Visit us at www.tolco.com