ABBREVIATIONS

&	AND
L	ANGLE
@	AT
℄	CENTERLINE
ø	DIAMETER OF ROUND
#	POUND OR NUMBER
(E)	EXISTING
(R)	RELOCATED
(N)	NEW
A.F.F.	ABOVE FINISH FLOOR
A.D.	AREA DRAIN
ADJ.	ADJUSTABLE
AGGR.	AGGREGATE
AL.	ALUMINUM
APPROX.	APPROXIMATE
ARCH.	ARCHITECTURAL
ASB.	ASBESTOS
ASPH.	ASPHALT
BD.	BOARD
BITUM.	BITUMINOUS
BLDG.	BUILDING
BLKG.	BLOCKING
BM.	BEAM
BOT.	BOTTOM
CAB.	CABINET
CEM.	CEMENT
CER.	CERAMIC
C.I.	CAST IRON
CLG.	CEILING
CLKG.	CAULKING
CLO.	CLOSET
CLR./CL.	CLEAR
C.O.	CASED OPENING
COL.	COLUMN
CONC.	CONCRETE
CONN.	CONNECTION
CONSTR.	CONSTRUCTION
CONT.	CONTINUOUS
CTSK.	COUNTERSUNK
CNTR.	COUNTER
CTR.	CENTER
DBL.	DOUBLE
DEPT.	DEPARTMENT
DET.	DETAIL
DIA.	DIAMETER
DIM.	DIMENSION
DISP.	DISPENSER
DN.	DOWN
D.O.	DOOR OPENING
DR.	DOOR
DWR.	DRAWER
D.S.	DOWNSPOUT
DWG.	DRAWING
E.	EAST
EA.	EACH
E.J.	EXPANSION JOINT
EL.	ELEVATION
ELEC.	ELECTRICAL
E.P.	ELECTRICAL PANELBOARD
EQ.	EQUAL
EQPT.	EQUIPMENT
EXST.	EXISTING
EXP.	EXPANSION
EXT.	EXTERIOR
F.E.	FIRE EXTINGUISHER
F.F.	FLOOR FINISH
FDN.	FOUNDATION
FIN.	FINISH
FL.	FLOOR
FLASH'G	FLASHING
FLUOR.	FLUORESCENT
F.O.C.	FACE OF CONCRETE
F.O.F.	FACE OF FINISH
F.O.S.	FACE OF STUD
FPRF.	FIREPROOF
F.S.	FLOOR SINK
FT.	FOOT OR FEET
FTG.	FOOTING
FURR.	FURRING
FUT.	FUTURE
G.A.	GAUGE
GALV.	GALVANIZED
GL.	GLASS
GR.	GRADE
GSM	GALVANIZED SHEET METAL
GYP.	GYPSUM
G.W.B.	GYPSUM WALL BOARD
H.B.	HOSE BIBB
H.C.	HOLLOW CORE
HDWD.	HARDWOOD
HDWE.	HARDWARE
H.M.	HOLLOW METAL
HORIZ.	HORIZONTAL
HR.	HOUR
HT.	HEIGHT

I.D.	INSIDE DIAMETER
INSUL.	INSULATION
INT.	INTERIOR
JT.	JOINT
KIT.	KITCHEN
LAM.	LAMINATE
LAV.	LAVATORY
LT.	LIGHT
L.E.D.	LIGHT EMITTING DIODE
MAX.	MAXIMUM
M.C.	MEDICINE CABINET
MECH.	MECHANICAL
MEMB.	MEMBRANE
MTL.	METAL
MFR.	MANUFACTURER
MIN.	MINIMUM
MIR.	MIRROR
MISC.	MISCELLANEOUS
M.O.	MASONRY OPENING
MTD.	MOUNTED
MUL.	MULLION
N.	NORTH
N.I.C.	NOT IN CONTRACT
NO. OR #	NUMBER
NOM.	NOMINAL
N.T.S.	NOT TO SCALE
O.A.	OVERALL
OBS.	OBSCURE
O.C.	ON CENTER
O.D.	OUTSIDE DIAMETER
OFF.	OFFICE
OPNG.	OPENING
OPP.	OPPOSITE
PL.	PLATE
P.LAM.	PLASTIC LAMINATE
PLAS.	PLASTER
PLYWD.	PLYWOOD
PR.	PAIR
PT.	POINT
PTN.	PARTITION
Q.T.	QUARRY TILE
QSR	QUICK SERVE RESTAURANT
R OR RAD.	RADIUS
R.D.	ROOF DRAIN
REF.	REFERENCE
REFR.	REFRIGERATOR
RGTR.	REGISTER
REINF.	REINFORCED
REQ'D	REQUIRED
RESIL.	RESILIENT
RM.	ROOM
R.O.	ROUGH OPENING
R.W.L.	RAIN WATER LEADER
S.	SOUTH
S.C.	SOLID CORE
SCHED.	SCHEDULE
S.D.	SOAP DISPENSER
SECT.	SECTION
SH.	SHELF
SHR.	SHOWER
SHT.	SHEET
SIM.	SIMILAR
SPEC.	SPECIFICATION
SQ.	SQUARE
S.S.	STAINLESS STEEL
STD.	STANDARD
STL.	STEEL
STOR.	STORAGE
STRL.	STRUCTURAL
SYM.	SYMMETRICAL
T.B.S.	TO BE SPECIFIED
TRD	TREAD
T.B.	TOWEL BAR
T.C.	TOP OF CURB
TEL.	TELEPHONE
TER.	TERRAZZO
T&G	TONGUE & GROOVE
THK.	THICK
T.P.	TOP OF PAVEMENT
T.P.D.	TOILET PAPER DISPENSER
T.V.	TELEVISION
T.W.	TOP OF WALL
TYP.	TYPICAL
UNF.	UNFINISHED
U.N.O.	UNLESS NOTED OTHERWISE
VERT.	VERTICAL
V.C.T.	VINYL COMPOSITE TILE
W.	WEST
W/	WITH
W.B.	WALL BASE
W.C.	WATER CLOSET
WD.	WOOD
W/O	WITHOUT
WP.	WATERPROOF
WSCT.	WAINSCOT
WT.	WEIGHT

SYMBOLS

SECTION MARK	XX / XX.X
EXTERIOR ELEVATION TAG	XX / XX.X
ELEVATION TAG	X X XX.X X X
ELEVATION MARK	XX'-XX" LOCATION
FINISH TAG	XX-X
WINDOW TAG	X
DOOR TAG	X
WALL TAG	XX
KEYED NOTE	XX

BP WEST COAST PRODUCTS, LLC

ARCO 3400 am/pm
1402 S MERIDIAN
PUYALLUP, WA 98371

GENERAL PROJECT NOTES

1. ALL CONSTRUCTION SHALL COMPLY WITH APPLICABLE BUILDING CODES AND LOCAL RESTRICTIONS. CONTRACTORS MUST COMPLY WITH CONTRACTOR REGISTRATION REQUIREMENTS OF ALL GOVERNING AUTHORITIES. THE GENERAL BUILDING PERMITS SHALL BE PAID FOR BY THE OWNER UNLESS AGREED OTHERWISE. ALL OTHER PERMITS SHALL BE SECURED AND PAID FOR BY THE SUBCONTRACTOR DIRECTLY RESPONSIBLE. ALL REQUIRED CITY, COUNTY AND/OR STATE LICENSES SHALL BE ACQUIRED AND PAID FOR BY THE INDIVIDUAL SUBCONTRACTOR.
2. IT IS THE INTENT OF THE OWNER, THE ARCHITECT AND THEIR CONSULTANTS, THAT ALL WORK DEPICTED IN THESE DRAWINGS AND SPECIFICATIONS IS TO BE PROVIDED BY THE GENERAL CONTRACTOR. ANY REFERENCES TO THE CONTRARY THROUGHOUT THE CONSTRUCTION DOCUMENTS OR SPECIFICATIONS IS NOT INTENDED. ADDITIONALLY, CONTRACTOR IS TO REFER TO THE BID DOCUMENT PACKET AND/OR OWNER'S SCOPE OF WORK DOCUMENT(S) WHICH SHALL TAKE PRECEDENCE OVER SCOPE THAT MAY BE PRESENTED IN THIS SET OF CONSTRUCTION DOCUMENTS OR SPECIFICATIONS. THE SCOPE OF WORK DOCUMENT IS INTENDED TO IDENTIFY ALL OWNER SUPPLIED ITEMS OR WORK PROVIDED BY OTHERS. ABSENCE OF THESE DOCUMENTS MEANS ALL WORK NOTED IS THE RESPONSIBILITY OF THE GENERAL CONTRACTOR UNLESS THE OWNER HAS SPECIFIED OTHERWISE DURING THE BID PROCESS.
3. APPROVED PLANS SHALL BE KEPT IN A PLAN BOX AND SHALL NOT BE USED BY WORKMEN. ALL CONSTRUCTION SETS SHALL REFLECT SAME INFORMATION AS THE APPROVED PLANS. CONTRACTOR SHALL MAINTAIN ONE COMPLETE SET OF PLANS ON THE PREMISES IN GOOD CONDITION AT ALL TIMES. THIS SHALL INCLUDE ALL ADDENDA AND CHANGE ORDERS.
4. DISCREPANCIES BETWEEN PORTIONS OF THE CONTRACT DOCUMENTS, DRAWINGS AND SPECIFICATIONS ARE NOT INTENDED. THE CONTRACTOR IS TO CLARIFY ANY SUCH DISCREPANCIES WITH THE ARCHITECT OR PROJECT MANAGER PRIOR TO COMMENCING WORK. STATED DIMENSIONS TAKE PRECEDENCE OVER GRAPHICS, DO NOT SCALE DRAWINGS TO DETERMINE LOCATIONS. THE ARCHITECT OR PROJECT MANAGER SHALL BE NOTIFIED OF ANY SUCH DISCREPANCIES PRIOR TO CONTINUING WITH WORK.
5. IT IS THE INTENT OF THE ARCHITECT THAT THIS WORK BE IN CONFORMANCE WITH ALL REQUIREMENTS OF THE BUILDING AUTHORITIES HAVING JURISDICTION OVER THIS TYPE OF CONSTRUCTION AND OCCUPANCY. THE CONTRACTOR SHALL NOTIFY ARCHITECT IMMEDIATELY OF CONFLICTS WITH GOVERNING CODE REQUIREMENTS BEFORE PROCEEDING FURTHER WITH THE AFFECTED WORK.
6. IT SHALL BE THE RESPONSIBILITY OF THE CONTRACTOR TO LOCATE ALL EXISTING UTILITIES AND TO PROTECT THEM FROM DAMAGE. CONTRACTOR SHALL BEAR THE EXPENSE OF REPAIR OR REPLACEMENT OF UTILITIES OR OTHER PROPERTY DAMAGED BY OPERATIONS IN CONJUNCTION WITH THE EXECUTION OF THE WORK.
7. THE CONTRACTOR TO PROVIDE FIRE SPRINKLER SYSTEM AND ALARM SYSTEM (WHEN REQUIRED BY CODE AND NOTED AS REQUIRED BY THESE PLANS) IN ACCORDANCE WITH NFPA REQUIREMENTS. FIRE SPRINKLER CONTRACTOR IS TO SUBMIT COMPLETE SHOP DRAWINGS, LAYOUT AND RELATED DATA TO BUILDING DEPARTMENT AND FIRE MARSHAL FOR APPROVAL PRIOR TO INSTALLATION.
8. FOR CONSTRUCTION DETAILS NOT SHOWN, USE THE MANUFACTURER'S APPROVED SHOP DRAWINGS/DATA SHEETS IN ACCORDANCE WITH THE PROJECT SPECIFICATIONS. ALL DETAILS AND SECTIONS SHOWN ON THE DRAWINGS ARE INTENDED TO BE TYPICAL AND SHALL BE CONSTRUED TO APPLY TO ANY SIMILAR SITUATION ELSEWHERE IN THE WORK EXCEPT WHERE A DIFFERENT DETAIL IS SHOWN.
9. THE CONTRACTOR SHALL VERIFY LOCATIONS OF ALL FOOD SERVICE EQUIPMENT AND COORDINATE LOCATION OF ALL UTILITIES INCLUDING FLOOR SINKS, FLOOR DRAINS, SLOPES/SLAB DEPRESSIONS AND RAISED CURBS, ELECTRICAL AND PLUMBING AND STUBOUTS FOR FUTURE EQUIPMENT WHERE NOTED.
10. THE CONTRACTOR SHALL BE RESPONSIBLE FOR THE COMPLETE SECURITY OF THE SITE WHILE JOB IS IN PROGRESS AND UNTIL BUILDING IS OCCUPIED.
11. ALL DEBRIS SHALL BE REMOVED FROM PREMISES REGULARLY AND ALL AREAS SHALL BE LEFT IN A CLEAN (BROOM) CONDITION AT ALL TIMES.
12. CONTRACTOR SHALL TAKE ALL NECESSARY PRECAUTIONS TO ENSURE THE SAFETY OF THE OCCUPANTS AND WORKERS AT ALL TIMES.
13. CONTRACTOR SHALL PROVIDE TEMPORARY WATER, POWER, TELEPHONE, FACSIMILE OR METHOD TO RECEIVE E-MAIL, PRINTER AND TOILET FACILITIES AS REQUIRED.
14. GENERAL CONTRACTOR IS RESPONSIBLE FOR RECEIVING, UNLOADING, UN-CRATING, INSTALLATION AND HOOKUP OF ALL FOOD SERVICE EQUIPMENT AND OTHER OWNER OR VENDOR FURNISHED ITEMS.
15. GENERAL CONTRACTOR IS REQUIRED TO LABEL ALL ELECTRICAL PANELS, PLUMBING VALVES, AND ROOF TOP EQUIPMENT WITH PLASTIC PHENOLIC ENGRAVED PLATES ATTACHED TO IDENTIFY THE EQUIPMENT USE OR PURPOSE.
16. CONTRACTOR SHALL SUPPLY, LOCATE AND BUILD INTO THE WORK ALL INSERTS, ANCHORS, ANGLES, PLATES, OPENINGS, SLEEVES, HANGERS, SLAB DEPRESSIONS AND PITCHES AS MAY BE REQUIRED TO ATTACH AND ACCOMMODATE OTHER WORK. SPECIAL INSPECTION REQUIREMENTS MAY APPLY TO ALL STRUCTURAL EMBEDMENTS OR POST INSTALLED ANCHORS. CONTRACTOR SHALL CONFIRM REQUIREMENTS PRIOR TO INSTALLATION.
17. IT IS THE CONTRACTOR'S SOLE RESPONSIBILITY TO DETERMINE MEANS AND METHODS FOR ERECTION PROCEDURE AND SEQUENCE OF THE CONSTRUCTION. CONTRACTOR TO INSURE THE SAFETY OF ALL INSTALLED IMPROVEMENTS, BUILDINGS AND THEIR COMPONENT PARTS DURING ERECTION.
18. MATERIALS LISTED IN DRAWINGS ARE BASED ON DESIGN INTENT. ALTERNATE SPECIFICATIONS MAY BE ACCEPTED PROVIDED THEY CLOSELY MATCH AND ARE DEEMED EQUAL TO SPECIFIED MATERIAL. GENERAL CONTRACTOR IS TO SUBMIT PROPOSED SAMPLES OF SUBSTITUTIONS, ALONG WITH SAMPLE OF THAT SPECIFIED IN DRAWINGS FOR REVIEW BY THE ARCHITECT OR PROJECT MANAGER. SUBSTITUTIONS WILL ONLY BE APPROVED IF SPECIFIED MATERIAL IS PROVEN TO BE UNAVAILABLE WITHIN A REASONABLE TIME FRAME OR THE SUBSTITUTION IS A BENEFIT TO THE OWNER RELATED TO COST OR SCHEDULE TIME SAVINGS.
19. THE PROJECT BOUNDARIES SHALL BE CONFIRMED BY THE CONTRACTOR PRIOR TO CONSTRUCTION. ANY DISCREPANCIES SHALL BE BROUGHT TO THE OWNERS ATTENTION IMMEDIATELY BEFORE PROCEEDING WITH CONSTRUCTION.
20. ALL LABOR, MATERIALS AND INSTALLATIONS MUST COMPLY WITH THE CODES AND REGULATIONS OF ALL AUTHORITIES HAVING JURISDICTION. ANY DISCREPANCY WHICH EXISTS BETWEEN THE REQUIREMENTS BY THE PLANS, SPECIFICATIONS, SAID CODES, RULES AND REGULATIONS, SHALL BE IMMEDIATELY BROUGHT TO THE ATTENTION OF THE ARCHITECT, IN WRITING FOR RESOLUTION. IF ANY CHANGE IN THE PLANS AND / OR SPECIFICATIONS OCCURS AS A RESULT OF THE REQUIREMENTS OF THE LIFE SAFETY CODE (NFPA 101) OR ANY OTHER AUTHORITIES HAVING JURISDICTION AFTER THE SUBMISSION OF BIDS, THEN THE BIDDERS WILL BE GIVEN THE OPPORTUNITY TO ADJUST THEIR BIDS, IF NECESSARY, ONLY FOR THE CHANGE.
21. THE CONTRACTOR SHALL COORDINATE THE WORK WITH MECHANICAL, ELECTRICAL AND PLUMBING DRAWINGS FOR ALL NECESSARY OPENINGS AND PENETRATIONS THROUGH WALLS, CEILING AND FLOORS.
22. ALL EXPOSED PIPES, CONDUITS OR DUCTS IN FINISHES AREAS, WHETHER SHOWN ON DRAWINGS OR NOT, SHALL BE FURRED OUT WITH GYPSUM BOARD.
23. LOCATION OF ACCESS DOORS SUPPLIED BY MECHANICAL TRADES AND INSTALLED BY OTHERS SHALL BE DETERMINED IN THE FIELD THROUGH COORDINATION OF TRADES, LOCATION OF LIGHT FIXTURES SHALL GOVERN POSITION OF DUCTS AND PIPES FOR WHICH ACCESS DOORS ARE REQUIRED. ACCESS DOORS SHALL NOT BE PLACED IN INACCESSIBLE POSITIONS OR IN THE WAY OF LIGHTS, GRILLS, REGISTERS, CONCEALED BY CASEWORK, ECT.

PROJECT DATA

PROJECT ADDRESS:
1402 SOUTH MERIDIAN,
PUYALLUP, WA 98371

ASSESSOR'S PARCEL NUMBER:
773000-028-1 & 773000-028-8: TITLE PARCEL A
773000-003-1 & 773000-002-1: TITLE PARCEL B

ZONING:
GENERAL COMMERCIAL (GC)

SITE AREA:
51,520 S.F. (1.18 AC)

BUILDINGS:

CONVENIENCE STORE
CONSTRUCTION TYPE: V-B (NON SPRINKLERED)
USE GROUP: M
GROSS AREA: 3,349 S.F.

CANOPY
CONSTRUCTION TYPE: II-B
USE GROUP: M
GROSS AREA: 6,321 S.F.

CAR WASH
CONSTRUCTION TYPE: V-B
USE GROUP: B
GROSS AREA: 1,158 S.F.

PARKING REQUIREMENTS
NO. OF SPACES REQUIRED: 1 SPACE PER 300 SQUARE FEET
3,349/300 = 11.16
NO. OF SPACES PROVIDED: 21
NO. OF ACCESSIBLE PARKING: 1 VAN ACCESSIBLE PER 1-25 AUTO STALLS
NO. OF BICYCLE PARKING: 1 PER 25 AUTO STALLS (2 PROVIDED)
NO. OF EV PARKING:
PER IBC WA AMENDMENT 429, M-OCCUPANCY IS EXEMPT FROM PROVIDING EV CHARGING INFRASTRUCTURE WHEN IT DOES NOT DESIGNATE EMPLOYEE PARKING. HOWEVER, TWO (2) EV PARKING SPACES ARE PROVIDED.

OCCUPANCY LOAD CALCULATION
SEE SHEET G1.3

SCOPE OF WORK

CONSTRUCTION OF NEW 3,349 S.F. ARCO AM/PM CONVENIENCE STORE WITH 4,607 S.F. FUEL CANOPY (49'x94') WITH EIGHT (8) MULTI PRODUCT DISPENSERS, AND TWO (2) UNDERGROUND STORAGE TANKS. CAR WASH AND ASSOCIATED SITE IMPROVEMENTS.

PERMITTED SEPERATELY

- SIGNAGE UNDER SEPARATE PERMIT
- ELECTRICAL SHEETS ARE FOR REFERENCE ONLY – PERMIT WILL BE ISSUED BY L&I

APPLICABLE CODES

BUILDING CODE :	2018 INTERNATIONAL BUILDING CODE*
PLUMBING CODE:	2018 UNIFORM PLUMBING CODE*
ELECTRICAL CODE:	2018 NATIONAL ELECTRICAL CODE
MECHANICAL CODE:	2018 INTERNATIONAL MECHANICAL CODE AND INTERNATIONAL FUEL GAS CODE*
ENERGY CODE:	2018 WASHINGTON STATE ENERGY CODE
FIRE CODE:	2018 INTERNATIONAL FIRE CODE*
ACCESSIBILITY CODE:	ICC/ANSI A117.1-2009
LOCAL CODES:	PUYALLUP MUNICIPAL CODE

*AS AMENDED BY STATE AND LOCAL JURISDICTION

SITE VICINITY MAP

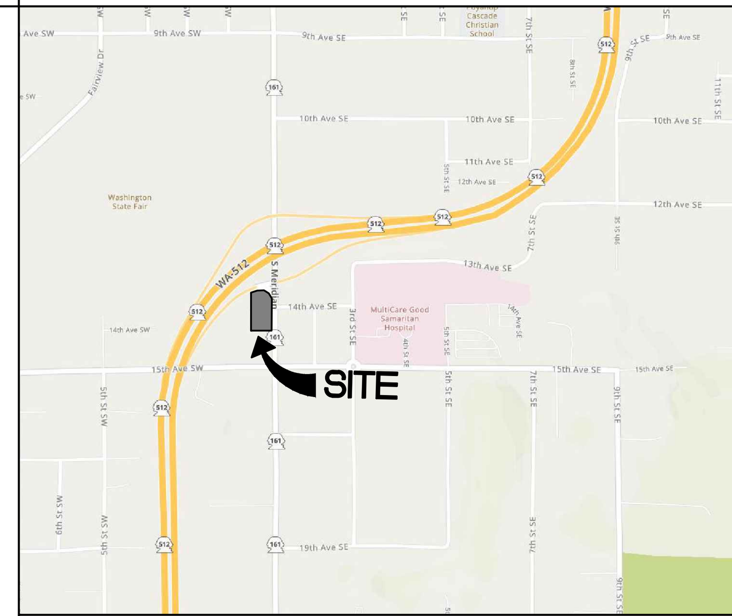

PROJECT DIRECTORY

APPLICANT/DEVELOPER
BP PRODUCTS, NA
PO BOX 696049
SAN ANTONIO, TX 78269-9931
CONTACT: RANDALL ARNOLD
RANDALL.ARNOLD@BP.COM
PHONE

ARCHITECT
BARGHAUSEN CONSULTING ENGINEERS, INC.
18215 72ND AVE. SOUTH
KENT, WA 98032
CONTACT: MONIKA UEHLIN
PHONE: 425-251-6222 EXT. 7491

CIVIL ENGINEER
BARGHAUSEN CONSULTING ENGINEERS, INC.
18215 72ND AVE. SOUTH
KENT, WA 98032
CONTACT: ALEX WHITE
PHONE: 425-251-6222

LANDSCAPE ARCHITECT
BARGHAUSEN CONSULTING ENGINEERS, INC.
18215 72ND AVE. SOUTH
KENT, WA 98032
CONTACT: JEFF VARLEY
PHONE: 425-251-6222

STRUCTURAL ENGINEER
PCS STRUCTURAL SOLUTIONS
811 FIRST AVENUE, SUITE 620
SEATTLE, WA
CONTACT: JACK PINKARD
PHONE: 206.292.5076

STRUCTURAL ENGINEER (CANOPY)
PERRY BUILDERS
12405LOCKSLEY LANE
AUBURN, CA
CONTACT: LOGAN GRAVES
PHONE: 530-745-0580

PLUMBING, MECHANICAL ELECTRICAL ENGINEER
ABOSSEIN ENGINEERING LLC.
2100 11TH AVE NE
BELLEVUE, WA 98004
CONTACT: ALEX ABOSSEIN
PHONE: 425.462.9441

FUEL TANKS
BARGHAUSEN CONSULTING ENGINEERS, INC.
18215 72ND AVE. SOUTH
KENT, WA 98032
CONTACT: OMAR VASQUEZ
PHONE: 425.251.6222

DEVELOPMENT CONTACTS

ZONING AND LAND USE
CITY OF PUYALLUP
PLANNING SERVICES
333 SOUTH MERIDIAN
PUYALLUP, WA 98371
253-864-4165

BUILDING
CITY OF PUYALLUP
BUILDING SERVICES/FIRE PROTECTION
333 SOUTH MERIDIAN
PUYALLUP, WA 98371
253-864-4165

ENVIRONMENTAL – FOOD
TACOMA-PIERCE COUNTY
HEALTH DEPARTMENT
3629 S. D STREET
TACOMA, WA 98418
253-649-1706

STORMWATER, WATER QUALITY, SANITARY SEWER
CITY OF PUYALLUP
PUBLIC WORKS
1100 39TH AVENUE S.E.
PUYALLUP, WA 98371
253-841-5505

FIRE
SOUTH PIERCE COUNTY
FIRE & RESCUE
902 7TH STREET N.W.
PUYALLUP, WA 98371
253-538-6402

ENVIRONMENTAL – FUEL
WASHINGTON STATE
DEPARTMENT OF ECOLOGY
P.O. BOX 47655
OLYMPIA, STATE 98504
360-407-7382

AIR QUALITY
PUGET SOUND CLEAN AIR AGENCY
1904 THIRD AVENUE
SEATTLE, WA 98101
206-689-4063

ELECTRIC
WASHINGTON STATE
DEPARTMENT OF LABOR AN INDUSTRIES (L&I)
P.O. BOX 44000
OLYMPIA, STATE 98504
360-902-5800

PERMIT SUBMITTAL DATES

- 10/04/2023

PERMIT ISSUE DATES

ARCO APPROVAL DATES

SITE KEY PLAN

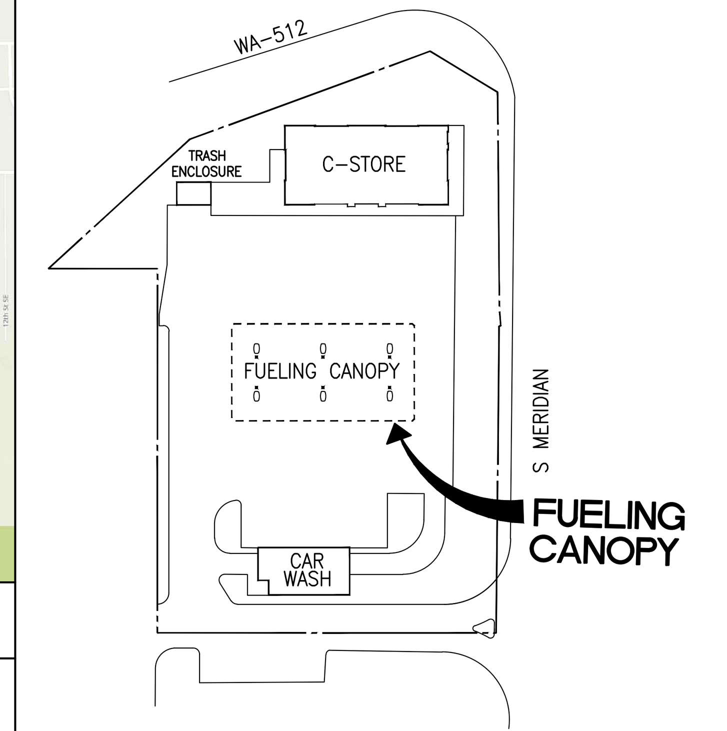

INDEX OF DRAWINGS

FUELING CANOPY

GENERAL	
G1.1	COVER SHEET
SURVEY	
1 OF 2	ALTA & NSPS LAND TITLE SURVEY
2 OF 2	ALTA & NSPS LAND TITLE SURVEY
LANDSCAPE	
L1	LANDSCAPE PLAN
ARCHITECTURAL	
AS1.0	ARCHITECTURAL SITE PLAN
ARCHITECTURAL (CANOPY)	
CA1.1	CANOPY SLAB PLAN
CA1.2	CANOPY REFLECTED CEILING PLAN
CA2.1	CANOPY ELEVATIONS
STRUCTURAL (CANOPY)	
CA1	ARCHITECTURAL ELEVATIONS
CS1	FRAMING PLAN
CS2	SECTIONS
CF1	FOUNDATION PLAN
ELECTRICAL	
E0.2	SPECIFICATIONS
ES1.0	ELECTRICAL SITE PLAN
ES1.1	ELECTRICAL SITE DETAILS
FUELING	
G.0.0	TITLE SHEET AND DRAWING INDEX
G.0.2.0	UNDERGROUND TANK AND PIPING SITE PLAN AND INSTALLATION NOTES
G.0.2.1	TANK & PIPING SCOPE OF WORK & GENERAL NOTES (FRP 1 OF 2)
G.0.2.2	TANK & PIPING SCOPE OF WORK & GENERAL NOTES (FRP 2 OF 2)
G.0.5	DESIGN INTENT MISCELLANEOUS DETAILS
G.0.6.1	DESIGN INTENT: NEW VENT STACK INSTALLATION DETAILS
G.0.7.1	TANK FILL & VAPOR RISER STATIC GROUNDING DETAILS (STANDARD)
M.5.1.01	TANK AND PIPING MATERIALS LIST (1 OF 2)
M.5.1.02	TANK AND PIPING MATERIALS LIST (2 OF 2)
M.5.1.04	TYPICAL 10' DIA. 25,000 GALLON DOUBLE WALL FIBERGLASS TANK INSTALLATION DETAILS
M.5.1.15	TYPICAL 10' DIA. 12,000/10,000 GALLON DOUBLE WALL FIBERGLASS TANK INSTALLATION DETAILS
M.5.1.28	UST INSTALLATION (2) 10' DIA. 25K/22K BLENDING
M.5.1.30	SINGLE UST GASOLINE TANK SUMP FITTING DETAILS
M.5.1.33	DIESEL TANK SUMP & FITTING INSTALLATION DETAILS (STANDARD OPW)
M.5.1.34	FILL\VAPOR II INSTALLATION DETAILS (STANDARD OPW)
M.5.1.38	DISPENSER DETAILS: WAYNE OVATION (3+0) BLENDING DISPENSER INSTALLATION DETAILS ON ISLANDS
M.5.1.40	DISPENSER DETAILS: WAYNE OVATION (3+1) BLENDING DISPENSER INSTALLATION DETAILS ON ISLANDS
M.5.1.41	TANK SLAB CONCRETE SPECIFICATIONS & IDENTIFICATION MARKING DETAILS
M.5.1.42	ELECTRICAL FUELING SITE PLAN & CLASS 1, DIVISION 1 AND 2 HAZARDOUS AREA PLAN
M.5.1.43	FUEL SYSTEM ELECTRICAL CONDUIT POINT TO POINT PLAN
M.5.1.44	WAYNE DISPENSER SCHEMATICS LEAK DETECTION AND CAT 5 NOTES
M.5.1.45	VEEDER ROOT 450 AND FE PETRO INTERFACE FIELD WIRING DIAGRAM (SINGLE MASTER)
M.5.1.47	ELECTRICAL UNITIZED FUELING MANAGER CABINET ELEVATIONS AND DETAILS
M.5.1.48	ELECTRICAL PANEL E-STOP CONTROL WIRING SCHEMATIC AND TYPICAL FUELING ELEVATION
M.5.1.49	ELECTRICAL LOW VOLTAGE DISCONNECT FOR DATA/INTERCOM/MEDIA WIRING DIAGRAMS
M.5.1.50	EMERGENCY SHUTDOWN SCHEMATIC FUELING CONTROLS W/VFC's

CLIENT:

BP WEST COAST PRODUCTS, LLC

Barghausen Consulting Engineers, Inc.

18215 72nd Avenue South
Kent, WA 98032
425.251.6222
barghausen.com

NO.	DATE	REVISION DESCRIPTION
1		
2		
3		
4		
5		
6		
7		
8		
9		
10		
11		
12		

SEAL:
10697 REGISTERED ARCHITECT
DANIEL B GOALWIN
STATE OF WASHINGTON
EXP: 08/05/24

DEVELOPMENT INFORMATION:
ARCO NTI
3400 am/pm
FUEL CANOPY w/ 6 MPD's

SITE ADDRESS:
1402 S MERIDIAN
PUYALLUP, WA 98371

FACILITY #7184

DESIGNED BY:	ALLIANCE Z&DM:
CHECKED BY:	BP REPM:
DRAWN BY:	ALLIANCE PM:
VERSION: - -	PROJECT NO: 21730

DRAWING TITLE:
COVER SHEET

SHEET NO:
G1.1

ALTA/NSPS LAND TITLE SURVEY

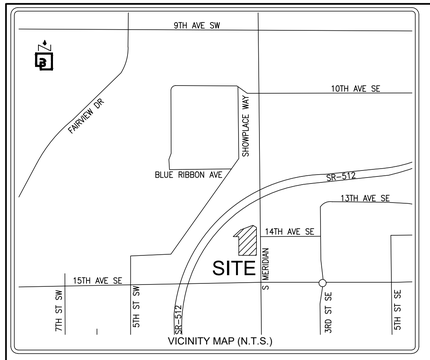

VICINITY MAP (N.T.S.)

SURVEY INFORMATION:

HORIZONTAL DATUM – BASIS OF BEARINGS:
NAD 83/2011 WASHINGTON STATE COORDINATE SYSTEM, SOUTH ZONE, ESTABLISHED BY GPS OBSERVATION UTILIZING THE WASHINGTON STATE REFERENCE NETWORK. THE BASIS OF BEARINGS IS N 00°33'46" E BETWEEN THE FOUND 2" BRASS DISK AT THE INTERSECTION OF S. MERIDIAN ST. & 15TH AVE SW AND THE FOUND 2" IRON PIPE W/TACK IN MONUMENT CASE AT THE INTERSECTION OS S. MERIDIAN ST. & THE ON/OFF RAMP TO SR 512.

VERTICAL DATUM
VERTICAL DATUM FOR THIS SURVEY IS NAVD88 ESTABLISHED FROM WSDOT MONUMENT ID NO. 247. ELEVATION = 80.449' (NAVD88)

LOT AREA
52,078± SF (1.20± AC)

ADDRESS
1402 S. MERIDIAN, PUYALLUP, WA 98371

TAX PARCEL NUMBER
773000-028-1 & 773000-028-8: TITLE PARCEL A
773000-003-1 & 773000-002-1: TITLE PARCEL B

REFERENCE SURVEYS:
1. PIERCE COUNTY SHORT PLAT OF MERIDIAN CENTER – AFN 77-315 (1977)
2. PLAT OF SOURWINE'S ACRE LOTS – VOL 8 PLATS, PAGE 10 (1905)
3. PIERCE COUNTY SHORT PLAT – AFN 8706010381 (1987)
4. WSDOT SR 512 96TH ST TO JCT. SR 167, DATED MAY 23, 1968

DATE OF SURVEY:
THIS SURVEY REPRESENTS VISIBLE PHYSICAL IMPROVEMENT CONDITIONS EXISTING ON MARCH 22, 2022 & JULY 14, 2023. ALL SURVEY CONTROL INDICATED AS "FOUND" WAS RECOVERED FOR THIS PROJECT IN MARCH OF 2022 & JULY OF 2023.

FLOOD INFORMATION:
FEDERAL EMERGENCY MANAGEMENT AGENCY (FEMA) INFORMATION: FIRM (FLOOD INSURANCE RATE MAP) MAP NO. 53053C0341E PANEL 341 OF 1375, DATED MARCH 7, 2017. THE SUBJECT PROPERTY IS IN ZONE X, AREAS DETERMINED TO BE OUTSIDE THE 0.2% ANNUAL CHANCE FLOODPLAIN.

ZONING INFORMATION:
(A ZONING REPORT WAS NOT FURNISHED FOR THIS SITE)

SURVEYOR'S NOTES:

- ALL DISTANCES SHOWN HEREON ARE GROUND MEASUREMENTS IN U.S. SURVEY FEET.
- THE BOUNDARY CORNERS AND LINES DEPICTED ON THIS MAP REPRESENT DEED LINES ONLY, AND DON'T PURPORT TO SHOW OWNERSHIP LINES THAT MAY OTHERWISE BE DETERMINED BY A COURT OF LAW. NO GUARANTEE OF OWNERSHIP IS EXPRESSED OR IMPLIED.
- UNDERGROUND UTILITIES AND FEATURES DEPICTED HEREON ARE BASED ON FIELD OBSERVATION, MARKINGS, DEVELOPMENT PLANS, AND/OR AVAILABLE RECORD DCOUMENTS ONLY. THE TRUE LOCATION, NATURE AND/OR EXISTENCE OF BELOW GROUND FEATURES, DETECTED OR UNDETECTED, SHOULD BE VERIFIED.
- THE LEGAL DESCRIPTION AND SPECIAL EXCEPTIONS SHOWN HEREON ARE PER THE ABOVE REFERENCED TITLE REPORT UNLESS OTHERWISE NOTED.
- THIS SURVEY HAS DEPICTED ALL VISIBLE OCCUPATIONAL INDICATORS (IE. FENCE LINES, BUILDINGS, WALLS, ETC. – SEE MAP FOR PARTICULARS) PER W.A.C. 332-130. LINES OF OCCUPATION, AS DEPICTED, MAY INDICATE AREAS OF POTENTIAL CLAIMS OF UNWRITTEN OWNERSHIP. THIS SURVEY HAS ONLY DEPICTED THE RELATIONSHIP BETWEEN LINES OF OCCUPATION AND DEEDED LINES OF RECORD. NO RESOLUTION OF OWNERSHIP BASED ON UNWRITTEN RIGHTS HAS BEEN MADE BY THIS SURVEY OR BY ANY PERSONNEL OF BARGHAUSEN CONSULTING ENGINEERS, INC.
- THIS IS A FIELD TRAVERSE SURVEY. TOPCON GT AND TOPCON HYPER HR GPS AND DELL TABLET DATA COLLECTOR WERE USED TO MEASURE THE ANGULAR AND DISTANCE RELATIONSHIPS BETWEEN THE CONTROLLING MONUMENTATION AS SHOWN. CLOSURE RATIOS OF THE TRAVERSE MET OR EXCEEDED THOSE SPECIFIED IN W.A.C. 332-130-090. ALL INSTRUMENTS AND EQUIPMENT HAVE BEEN MAINTAINED IN ADJUSTMENT ACCORDING TO MANUFACTURERS' SPECIFICATIONS AND USED BY APPROPRIATELY TRAINED PERSONNEL.
- THIS SURVEY MEETS OR EXCEEDS THE "RELATIVE POSITIONAL PRECISION" REQUIREMENTS SET FORTH IN THE 2021 MINIMUM STANDARD DETAIL REQUIREMENTS FOR ALTA/NSPS LAND TITLE SURVEYS IN SECTION 3(E).
- THE RECORD DESCRIPTION FOR THE SUBJECT PROPERTY MATHEMATICALLY CLOSES.
- ELEMENTS AND FEATURES DEPICTED HEREON SATISFY THE REQUIREMENTS STATED WITHIN W.A.C. 332-130-145 FOR TOPOGRAPHIC MAPS, INCLUDING THE FOLLOWING: THE SOURCE OF THE CONTOURS SHOWN HEREON ARE BASED UPON DIRECT FIELD OBSERVATIONS. THE CONTOUR ACCURACY IS PER NATIONAL MAPPING STANDARDS, ONE HALF OF THE CONTOUR INTERVAL (1'). THE PURPOSE OF THIS SURVEY IS TO MAP THE CURRENT CONDITIONS FOR ENGINEERING DESIGN.
- BARGHAUSEN CONSULTING ENGINEERS, INC. SURVEY CREWS DETECTED NO OBSERVABLE EVIDENCE OF RECENT EARTH MOVING WORK, BUILDING CONSTRUCTION OR BUILDING ADDITIONS ON THE SUBJECT PROPERTY.
- BARGHAUSEN CONSULTING ENGINEERS, INC. SURVEY CREWS DETECTED NO OBSERVABLE EVIDENCE OF SITE USE AS A SOLID WASTE DUMP, SUMP OR SANITARY LANDFILL.
- THERE IS NO VISIBLE EVIDENCE OF ANY CEMETERIES OR BURIAL GROUNDS.
- THERE IS EVIDENCE OF PHYSICAL ACCESS TO PUBLIC RIGHT-OF-WAY.

TWP. 20N R.4E

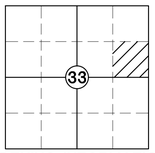

INDEXING INFORMATION
N.T.S.

TITLE INFORMATION:

TITLE COMMITMENT:
ALL TITLE INFORMATION SHOWN ON THIS MAP HAS BEEN EXTRACTED FROM STEWART TITLE GUARANTY COMPANY COMMITMENT NO. 21000200719, DATED JULY 29, 2021 AT 8:00 AM. INCLUDED ARE APPURTENANT EASEMENTS AND ADJOINING DEEDS FOR UNPLATTED LOTS, IF ANY. IN PREPARING THIS MAP, BARGHAUSEN CONSULTING ENGINEERS, INC. HAS CONDUCTED NO INDEPENDENT TITLE SEARCH NOR IS BARGHAUSEN CONSULTING ENGINEERS, INC. AWARE OF ANY TITLE ISSUES AFFECTING THE SURVEYED PROPERTY OTHER THAN THOSE SHOWN ON THE MAP AND DISCLOSED BY SAID COMMITMENT. BARGHAUSEN CONSULTING ENGINEERS, INC. HAS RELIED WHOLLY ON SAID TITLE COMPANY'S REPRESENTATIONS OF THE TITLE'S CONDITION TO PREPARE THIS SURVEY AND THEREFORE BARGHAUSEN CONSULTING ENGINEERS, INC. QUALIFIES THE MAP'S ACCURACY AND COMPLETENESS TO THAT EXTENT.

LEGAL DESCRIPTION
(PER ABOVE REFERENCED TITLE REPORT)
PARCEL A: (773000-028-1 & 773000-028-8)
LOT 1 AND THE NORTH 15 FEET OF THE EAST 178.33 FEET OF "COMMON ACCESS TRACT A", OF PIERCE COUNTY SHORT PLAT RECORDED UNDER RECORDING NO. 77-315, RECORDS OF PIERCE COUNTY WASHINGTON, FORMERLY BEING DESCRIBED AS THE NORTH 161.5 FEET OF THE WEST 178.33 FEET OF THE EAST 188.33 FEET OF LOT 20, SOURWINE'S ACRE LOTS, ACCORDING TO THE PLAT THEREOF RECORDED IN VOLUME 8 OF PLATS, PAGE 10, RECORDS OF PIERCE COUNTY, WASHINGTON;
TOGETHER WITH THAT PORTION OF 14TH AVENUE SW, VACATED BY ORDINANCE NO. 2304 ABUTTING THEREON AND ATTACHED THERETO, RECORDED UNDER RECORDING NO. 9206040385.
PARCEL A1:
RIGHTS TO USE THAT PORTION OF THE WITHIN DESCRIBED PROPERTY LYING WITHIN COMMON ACCESS TRACT "A" OF SIDE SHORT PLAT, FOR INGRESS, EGRESS, AND INSTALLATION AND MAINTENANCE OF UTILITIES, AS SET FORTH AND DELINEATED ON PIERCE COUNTY SHORT PLAT NO. 77-315;
EXCEPT ANY PORTION LYING WITHIN PARCEL A ABOVE.
PARCEL A2:
AN EASEMENT FOR INGRESS AND EGRESS AS SET FORTH IN DOCUMENTS ENTITLED "STATUTORY WARRANTY DEED" AS RECORDED UNDER RECORDING NUMBERS 2741876 AND 2792268.
PARCEL B: (773000-003-1 & 773000-002-1)
LOT 2, SOURWINE'S ACRE LOTS, ACCORDING TO THE PLAT THEREOF RECORDED IN VOLUME 8 OF PLATS, PAGE 10, RECORDS OF PIERCE COUNTY, WASHINGTON;
EXCEPT THAT PORTION LYING WITHIN STATE HIGHWAY NO. SR-512, 96TH STREET TO JUNCTION SR-167;
TOGETHER WITH THAT PORTION OF 14TH AVENUE SW, VACATED BY ORDINANCE NO. 2304 ABUTTING THEREON AND ATTACHED THERETO, RECORDED UNDER RECORDING NO. 9206040385.
SITUATE IN THE COUNTY OF PIERCE, STATE OF WASHINGTON.

SPECIAL EXCEPTIONS:
(PER ABOVE REFERENCED TITLE REPORT)

ITEMS 1 THOUGH 18 ARE NOT SURVEY RELATED.

19. TEMPORARY RIGHT, PERMIT, LICENSE AND EASEMENT TO USE AND OCCUPY A PORTION OF SAID LOT 20 FOR THE PURPOSE OF CONSTRUCTING HIGHWAY SLOPES AND OPERATING ALL NECESSARY MACHINERY AND EQUIPMENT THEREON AT ANY AND ALL TIMES UNTIL COMPLETION OF CONSTRUCTION FOR STATE RAD NO. 512 AS APPROPRIATED BY THE STATE OF WASHINGTON IN PIERCE COUNTY SUPERIOR COURT CAUSE NO. 198127. AFTER COMPLETION OF CONSTRUCTION, ALL RIGHTS OF EASEMENT SHALL BE EXTINGUISHED.
AFFECTS: PARCEL A
(BLANKET IN NATURE)(POTENTIALLY EXTINGUISHED)

20. RELINQUISHMENT OF ACCESS TO STATE HIGHWAY AND OF LIGHT, VIEW AND AIR BY DEED TO THE STATE OF WASHINGTON:
RECORDED: NOVEMBER 19, 1966
RECORDING NO.: 2321816
AFFECTS: PARCEL A
(APPLIES TO OFFSITE ADJACENT PROPERTY)

21. RELINQUISHMENT OF ACCESS TO STATE HIGHWAY AND OF LIGHT, VIEW AND AIR BY DEED TO THE STATE OF WASHINGTON:
RECORDED: OCTOBER 20, 1975
RECORDING NO.: 2632004
AFFECTS: PARCEL B
(BLANKET IN NATURE)

22. EASEMENT AND THE TERMS AND CONDITIONS THEREOF:
GRANTEE: PUGET SOUND POWER AND LIGHT COMPANY
PURPOSE: ELECTRIC TRANSMISSION AND/OR DISTRIBUTION SYSTEM
AFFECTS: EAST 10 FEET OF PARCEL A AND INCLUDES OTHER PROPERTY
RECORDED: MAY 26, 1976
RECORDING NO.: 2667305
(PLOTTED HEREON)

23. EASEMENT AND THE TERMS AND CONDITIONS THEREOF:
GRANTEE: PUGET SOUND POWER AND LIGHT COMPANY
PURPOSE: ELECTRIC TRANSMISSION AND/OR DISTRIBUTION SYSTEM
AFFECTS: PORTION OF PARCEL A AND INCLUDES OTHER PROPERTY
RECORDED: MAY 26, 1976
RECORDING NO.: 2667306
(BLANKET IN NATURE)

24. COVENANTS, CONDITIONS AND RESTRICTIONS AND EASEMENTS CONTAINED IN SHORT PLAT:
RECORDED: MAY 25, 1977
RECORDING NO.: 77-315
(PLOTTED HEREON)(COMMON ACCESS TRACT "A")

25. EASEMENT AND THE TERMS AND CONDITIONS THEREOF:
PURPOSE: INGRESS, EGRESS AND UTILITIES
AFFECTS: PORTION OF TRACT A LYING WITHIN PARCEL A
RECORDED: JANUARY 16, 1958
RECORDING NO.: 2792268
(PLOTTED HEREON)

26. EASEMENT AND THE TERMS AND CONDITIONS THEREOF:
PURPOSE: INGRESS AND EGRESS
AFFECTS: TRACT A OF SHORT PLAT 77-315
RECORDED: JUNE 8, 1977
RECORDING NO.: 2741876
(PLOTTED HEREON)

27. EASEMENT AND THE TERMS AND CONDITIONS THEREOF:
GRANTEE: CITY OF PUYALLUP
PURPOSE: CONSTRUCTING, INSTALLING, REPAIRING AND MAINTAINING STREET IMPROVEMENTS ACCORDING TO THE PLAN ENTITLED "SOUTH MERIDIAN STREET IMPROVEMENTS"
AFFECTS: PARCEL A
RECORDED: JUNE 10, 1987
RECORDING NO.: 8706100397
(PLOTTED HEREON)

28. MUTUAL MAINTENANCE AGREEMENT AND THE TERMS AND CONDITIONS THEREOF:
RECORDED: MAY 17, 1991
RECORDING NO.: 9105170239
AFFECTS: PARCEL A
(NOT SURVEY RELATED)

29. EASEMENT AND THE TERMS AND CONDITIONS THEREOF:
GRANTEE: WASHINGTON NATURAL GAS
PURPOSE: GAS PIPELINE OR PIPELINES
AFFECTS: NORTHERLY PORTION OF PARCEL A
RECORDED: MARCH 30, 1992
RECORDING NO.: 9203300111
(PLOTTED HEREON)

30. EASEMENT AND THE TERMS AND CONDITIONS THEREOF:
GRANTEE: CITY OF PUYALLUP
PURPOSE: STORMWATER, SANITARY AND WATERMAIN PIPE LINE AND APPURTENANCES
AFFECTS: SOUTH 30 FEET OF PARCEL B
RECORDED: JUNE 4, 1992
RECORDING NO.: 9206040382
(PLOTTED HEREON)

31. EASEMENT AND THE TERMS AND CONDITIONS THEREOF:
GRANTEE: CITY OF PUYALLUP
PURPOSE: STORMWATER, SANITARY AND WATERMAIN PIPE LINE AND APPURTENANCES
AFFECTS: NORTH 30 FEET OF PARCEL A
RECORDED: JUNE 4, 1992
RECORDING NO.: 9206040383
(PLOTTED HEREON)(OFFSITE ADJACENT EASEMENT)

32. EASEMENT AND THE TERMS AND CONDITIONS THEREOF:
GRANTEE: CITY OF PUYALLUP
PURPOSE: STORMWATER, SANITARY AND WATERMAIN PIPE LINE AND APPURTENANCES
AFFECTS: NORTH 30 FEET OF PARCEL A
RECORDED: JUNE 4, 1992
RECORDING NO.: 9206040384
(PLOTTED HEREON)

33. EASEMENT AND THE TERMS AND CONDITIONS THEREOF:
GRANTEE: PUGET SOUND POWER AND LIGHT COMPANY
PURPOSE: ELECTRIC TRANSMISSION AND/OR DISTRIBUTION SYSTEM
AFFECTS: PORTION OF PARCEL B
RECORDED: JULY 28, 1992
RECORDING NO.: 9207280563
(PLOTTED HEREON)(OFFSITE ADJACENT EASEMENT)

34. EASEMENT AND THE TERMS AND CONDITIONS THEREOF:
GRANTEE: PUGET SOUND POWER AND LIGHT COMPANY
PURPOSE: ELECTRIC TRANSMISSION AND/OR DISTRIBUTION SYSTEM
AFFECTS: PORTION OF PARCEL A
RECORDED: JULY 28, 1992
RECORDING NO.: 9207280564
(PLOTTED HEREON)

SURVEYOR'S CERTIFICATION:

TO: BP PRODUCTS NORTH AMERICA INC., A MARYLAND CORPORATION AND STEWART TITLE GUARANTY COMPANY

THIS IS TO CERTIFY THAT THIS MAP OR PLAT AND THE SURVEY ON WHICH IT IS BASED WERE MADE IN ACCORDANCE WITH THE 2021 MINIMUM STANDARD DETAIL REQUIREMENTS FOR ALTA/NSPS LAND TITLE SURVEYS, JOINTLY ESTABLISHED AND ADOPTED BY ALTA AND NSPS AND INCLUDES ITEMS 2, 3, 4, 7(a), 7(b)(1), 7(c), 8, 9, 11, 13, 14, 16, 17, 18, AND 19 OF TABLE A THEREOF. THE FIELDWORK WAS COMPLETED ON MARCH 22, 2022.

DATE OF PLAT OR MAP: JULY 19, 2023.

7/19/2023

MATTHEW K. ABBAS, PLS — DATE
WASHINGTON REGISTRATION NO. 20109892
MABBAS@BARGHAUSEN.COM

MATTHEW KARL ABBAS — STATE OF WASHINGTON — 20109892 — REGISTERED PROFESSIONAL LAND SURVEYOR — 7/19/2023

No.	Date	By	Ckd.	Appr.	Revision
1	7/18/23	KJR	MKA	MKA	ADDED TOPO AND UTILITIES TO THE ROAD SOUTH OF THE SITE TO 15TH AVE SE

Title: **ALTA/NSPS LAND TITLE SURVEY**
PTN OF THE SE1/4, OF THE NE1/4 OF SEC. 33, TWP. 20 N., RGE 4 E., W. M.
CITY OF PUYALLUP, PIERCE COUNTY, WASHINGTON STATE

For: BP FUELS NA

Scale: Horizontal N/A; Vertical

Designed AEF
Drawn MKA
Checked MKA
Approved MKA
Date 7/19/23

Barghausen Consulting Engineers, Inc.
18215 72nd Avenue South
Kent, WA 98032
425.251.6222
barghausen.com

Job Number 21730
Sheet 1 of 2

P:\21000s\21730\survey\21730-T001.dwg 7/19/2023 2:57 PM MABBAS

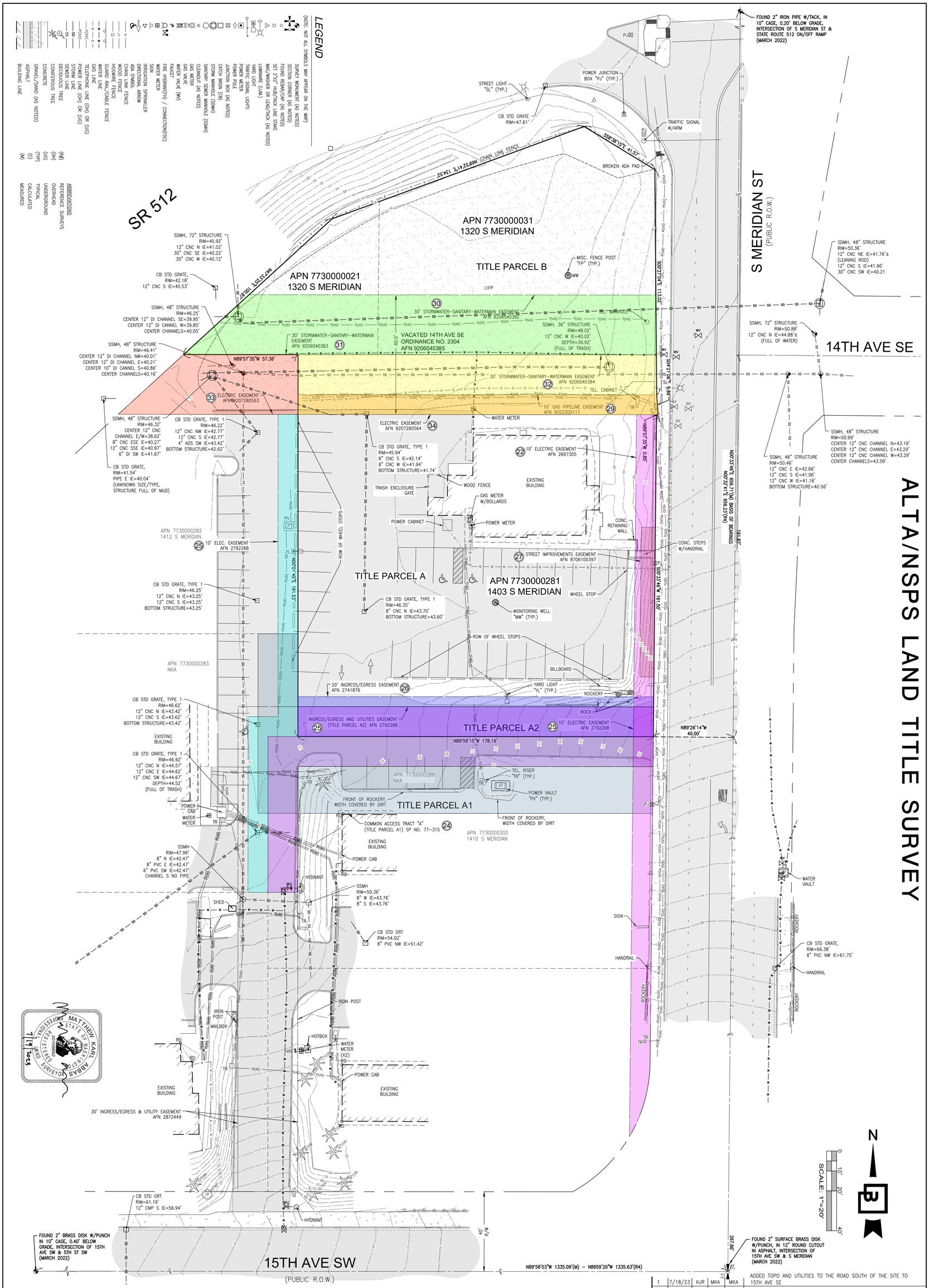

ALTA/NSPS LAND TITLE SURVEY

No.	Date	By	Ckd.	Appr.	Revision
1	7/18/23	KJR	MKA	MKA	ADDED TOPO AND UTILITIES TO THE ROAD SOUTH OF THE SITE TO 15TH AVE SE

Job Number: 21730

Sheet: 2 of 2

Barghausen Consulting Engineers, Inc.
18215 72nd Avenue South
Kent, WA 98032
425.251.6222 barghausen.com

Designed: AEF
Drawn: AEF
Checked: MKA
Approved: MKA
Date: 7/19/23

Scale:
Horizontal: 1"=20'
Vertical:

For: BP FUELS NA

Title: **ALTA/NSPS LAND TITLE SURVEY**
PTN OF THE SE1/4, OF THE NE1/4 OF SEC. 33,
TWP. 20 N., RGE 4 E., W. M.
CITY OF PUYALLUP, PIERCE COUNTY,
WASHINGTON STATE

P:\21000s\21730\survey\21730-T001.dwg 7/19/2023 2:57 PM MABBAS

LANDSCAPE PLAN

FOR

ARCO ampm PUYALLUP

SEC. 33, TWN. 20 N, RGE. 4 E, W.M.

CITY OF PUYALLUP, PIERCE COUNTY

1"=20'

0 10 20 40

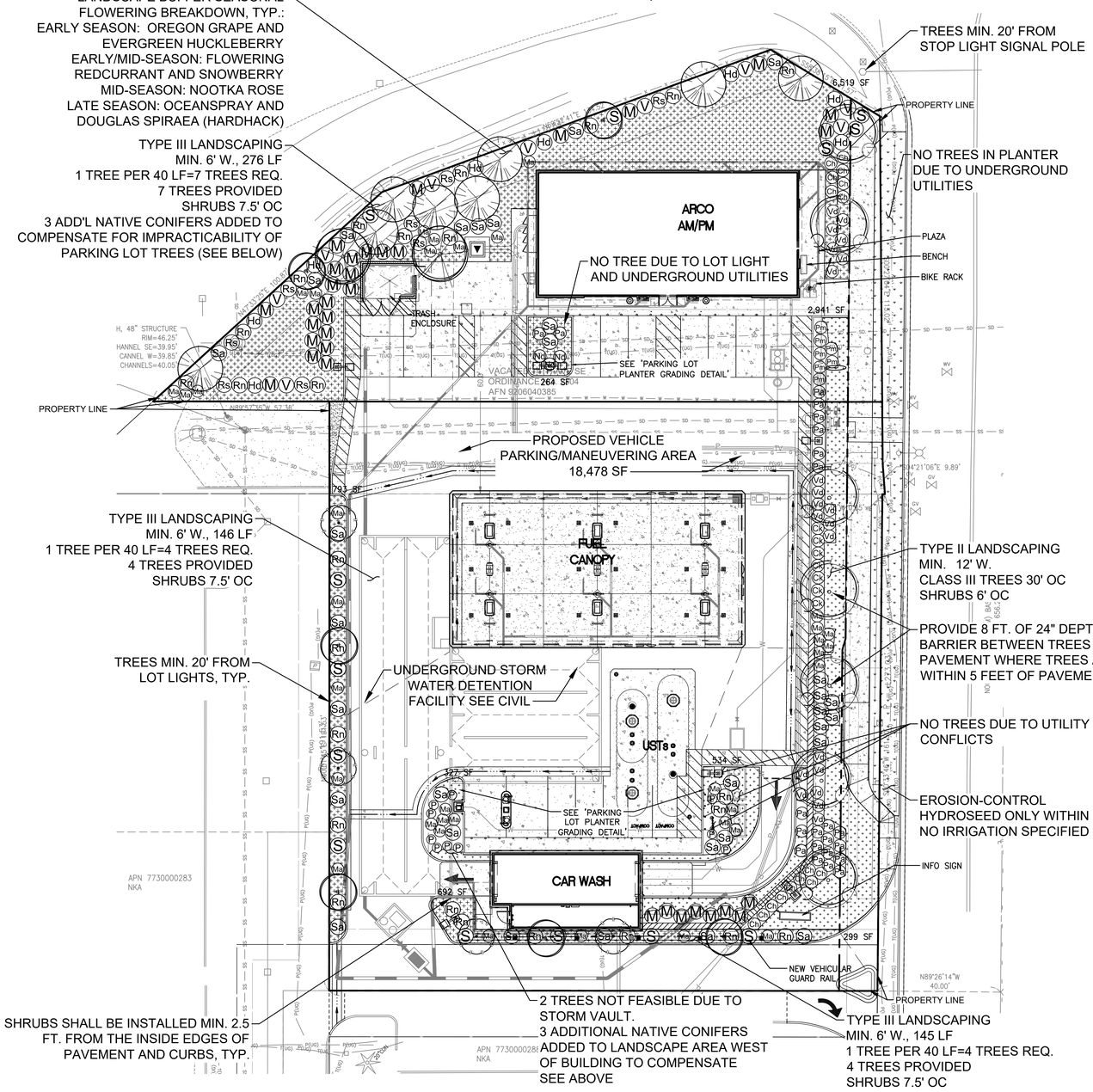

PAVED AREA 18,478 SF
18,478 X 0.05 = 924 SF INTERIOR PARKING LOT LANDSCAPING REQUIRED
1,125 SF PROVIDED

PLANT BED AREA: 12,412 SF
8" TOPSOIL MINIMUM DEPTH FOR THIS AREA = 345 CUBIC YARDS

REQUIRED TREE CLEARANCES

FOR CLASS III TREES, PER PUYALLUP VMS 12.4

BUILDINGS	10'
UTILITY AND STREET LIGHT POLES	10'
FIRE HYDRANTS	5'
DRIVEWAY (OUTER PAVING EDGE)	7.5'
STOP LIGHT SIGNAL POLES	20'
UNDERGROUND WATER, SANITARY SEWER OR STORM SEWER LINES	10'
UNDERGROUND GAS, POWER OR OTHER CONDUIT	3'
INTERSECTION (FACE OF CURB LINE CORNER AT INTERSECTION)	30'
STREET SIGNS (EXCL. PARKING SIGNS)	30' LEADING SIDE, 10' TRAILING SIDE

UTILITY CONFLICT NOTE:

THE CONTRACTOR SHALL BE RESPONSIBLE FOR VERIFYING THE LOCATION, DIMENSION, AND DEPTH OF ALL EXISTING UTILITIES WHETHER SHOWN ON THESE PLANS OR NOT BY POTHOLING THE UTILITIES AND SURVEYING THE HORIZONTAL AND VERTICAL LOCATION PRIOR TO CONSTRUCTION. THIS SHALL INCLUDE CALLING UTILITY LOCATE AT 811 48 HOURS IN ADVANCE AND THEN POTHOLING ALL OF THE EXISTING UTILITIES AT LOCATIONS OF NEW UTILITY CROSSINGS TO PHYSICALLY VERIFY WHETHER OR NOT CONFLICTS EXIST. LOCATIONS OF SAID UTILITIES AS SHOWN ON THESE PLANS ARE BASED UPON THE UNVERIFIED PUBLIC INFORMATION AND ARE SUBJECT TO VARIATION. IF CONFLICTS SHOULD OCCUR, THE CONTRACTOR SHALL NOTIFY BARGHAUSEN CONSULTING ENGINEERS, INC. TO RESOLVE ALL PROBLEMS PRIOR TO PROCEEDING WITH CONSTRUCTION.

811 Know what's **below.** **Call** before you dig. Dial 811

CITY OF PUYALLUP
Planning Division
Approved Landscape Plan
(253) 864-4165

Staff:

Date:

THIS APPROVAL IS VOID AFTER 180 DAYS FROM APPROVAL DATE. THE CITY WILL NOT BE RESPONSIBLE FOR ERRORS AND/OR OMISSIONS ON THESE PLANS. FIELD CONDITIONS MAY DICTATE CHANGES TO THESE PLANS AS DETERMINED BY THE PLANNING MANAGER, DESIGNEE, OR PROJECT PLANNER.

NOTE: **If street trees are required, Call Planning Division for final inspection: (253) 864-4165 (Option 3) Root Barriers are required around street trees in accordance with city standard detail. Top soil shall be installed in accordance with city standards - field verification required. Failure to install top soil and root barriers in accordance with city standards may result in rejection of installation.**

APPROVED

BY _____
CITY OF PUYALLUP
WATER PURVEYOR

DATE _____

NOTE: THIS APPROVAL IS VOID AFTER 180 DAYS FROM APPROVAL DATE.
THE CITY WILL NOT BE RESPONSIBLE FOR ERRORS AND/OR OMISSIONS ON THESE PLANS.
FIELD CONDITIONS MAY DICTATE CHANGES TO THESE PLANS AS DETERMINED BY THE WATER PURVEYOR.

CLIENT: bp

ARCO
BP WEST COAST PRODUCTS, LLC

Barghausen Consulting Engineers, Inc.
18215 72nd Avenue South
Kent, WA 98032
425.251.6222
barghausen.com

NO.	DATE	REVISION DESCRIPTION
1		
2		
3		
4		
5		
6		
7		
8		
9		
10		
11		
12		

SEAL: STATE OF WASHINGTON · JEFF M. VARLEY · LICENSED NO. 774 EXP. 12/31/23 · LICENSED LANDSCAPE ARCHITECT

DEVELOPMENT INFORMATION:
ARCO NTI
3400 am/pm
FUEL CANOPY w/ 6 MPD's

SITE ADDRESS:
SWC S MERIDIAN
@ HIGHWAY 512
PUYALLUP, WASHINGTON

FACILITY #TBD

DESIGNED BY:	ALLIANCE Z&DM:
CHECKED BY:	BP REPM:
DRAWN BY:	ALLIANCE PM:
VERSION: - -	PROJECT NO: 21730

DRAWING TITLE: LANDSCAPE PLAN

SHEET NO: L-1

P:\21000s\21730\engineering\21730-L.dwg 10/3/2023 4:51 PM JVARLEY

ARCHITECTURAL SITE PLAN

CONSTRUCTION NOTES:

1. CONVENIENCE STORE.
2. CAR WASH.
3. FUEL CANOPY.
4. UNDERGROUND STORAGE TANKS. SEE FUEL PLANS FOR DETAILS.
5. TRASH ENCLOSURE AND CONCRETE TRASH ENCLOSURE SLAB. REFER TO G1.4 AND G1.5
6. ON-SITE ASPHALT PAVEMENT. SEE CIVIL DRAWINGS.
7. ON-SITE CONCRETE PAVEMENT. SEE CIVIL DRAWINGS. PROVIDE EXPANSION AND CONTROL JOINTS PER CIVIL DRAWINGS.
8. BARRIER CURB. SEE CIVIL DRAWINGS.
9. CURB AND GUTTER. SEE CIVIL DRAWINGS.
10. CONCRETE SIDEWALK, WIDTH VARIES. SEE CIVIL DRAWINGS.
11. ACCESSIBLE PARKING STALL AND AISLE. SEE CIVIL DRAWINGS.
12. BOLLARD MOUNTED ACCESSIBLE PARKING STALL SIGNAGE. SEE CIVIL DRAWINGS.
13. PARKING STALL WITH 4" WIDE WHITE REFLECTIVE PAINT STRIPE (TYP.). SEE CIVIL DRAWINGS.
14. BOLLARD (TYP.). SEE CIVIL DRAWINGS.
15. LOT LIGHT. SEE DETAIL ON-SITE PHOTOMETRIC PLANS FOR MORE DETAILS. COORDINATE ALL CONDUIT RUNS, WIRING REQUIREMENTS, LOT LIGHT BASE, ETC. WITH ELECTRICAL PLANS. SEE CIVIL DRAWINGS.
16. AIR/WATER UNIT. ARCHITECTURAL PLANS FOR MORE DETAILS.
17. BICYCLE STORAGE. SEE CIVIL DRAWINGS.
18. SEATING BENCH.
19. LANDSCAPING. SEE LANDSCAPE PLANS.
20. CONCRETE TANK FUEL SLAB. SEE FUEL PLANS FOR DESIGN.
21. UNDER CANOPY CONCRETE SLAB. SEE ARCHITECTURAL PLANS FOR DETAILS.
22. FUEL DISPENSERS WITH HOOP BOLLARDS (TYP.). SEE FUEL PLANS FOR DETAILS.
23. PAVEMENT MARKINGS – 4" WIDE WHITE PAINTED STRIPES @ 2' O.C/45° ANGLE. SEE CIVIL DRAWINGS.
24. VACUUM UNIT. REFER TO ARCHTIECTURAL CAR WASH DRAWINGS, 01/CWA4.2.
25. VAN ACCESSIBLE AND STANDARD EV CHARGING STATION, SEE CIVIL DRAWINGS.
26. TRASH RECEPTACLE (TYP).
27. CONCRETE DRIVEWAY PER CITY OF PUYALLUP STANDARD DRAWING NO. 01.02.17. CIVIL DRAWINGS.
28. CONCRETE DRIVEWAY PER CITY OF PUYALLUP STANDARD DRAWING NO. 01.02.16. CIVIL DRAWINGS.
29. CONCRETE SIDEWALK PER CITY OF PUYALLUP STANDARD DRAWING NO. 01.02.01. SEE CIVIL DRAWINGS.
30. TYPE I CURB RAMP PER CITY OF PUYALLUP STANDARD DRAWING NO. 01.02.19. SEE CIVIL DRAWINGS.
31. OFF-SITE CURB AND GUTTER PER CITY OF PUYALLUP STANDARD DRAWING NO. 01.02.09. SEE CIVIL DRAWINGS.
32. PROTECT EXISTING CURB/CURB AND GUTTER TO REMAIN.
33. ACCESSIBLE PATH. REFER TO CIVIL GRADING PLAN FOR SLOPE REQUIREMENTS.
34. FREEWIRE EV CHARGING STATION TO BE INSTALLED
35. GREASE INTERCEPTOR. REFER TO CIVIL AND PLUMBING DRAWINGS.
36. WATER RECLAIM TANKS AND SEPARATOR. REFER TO CAR WASH, PLUMBING AND CIVIL DRAWINGS FOR CONTINUATION
37. SAND-OIL-WATER SEPARATOR. REFER TO CIVIL DRAWINGS.
38. VEHICLE GUARD RAIL. REFER TO CIVIL AND STRUCTURAL DRAWINGS.
39. RETAINING WALL. REFER TO CIVIL AND STRUCTURAL DRAWINGS.
40. CAR WASH OVERHEAD HEIGHT WARNING BAR. REFER TO ARCHITECTURAL CAR WASH DRAWINGS AND STRUCTURAL DETAILS.
41. CAR WASH PAY STATION. REFER TO ARCHITECTURAL CAR WASH DRAWINGS.
42. DRYER COUNT DOWN DISPLAY. REFER TO CAR WASH DRAWINGS.
43. PROPANE EXCHANGE CAGE
44. ELECTRICAL SWITCHGEAR. REFER TO ELECTRICAL DRAWINGS.
45. PROPOSED NEW MONUMENT SIGN. PERMITTED SEPARATELY.
46. EXISTING POLE SIGN TO BE RESURFACED WITH ARCO/AMPM SIGNAGE. PERMITTED SEPARATELY.

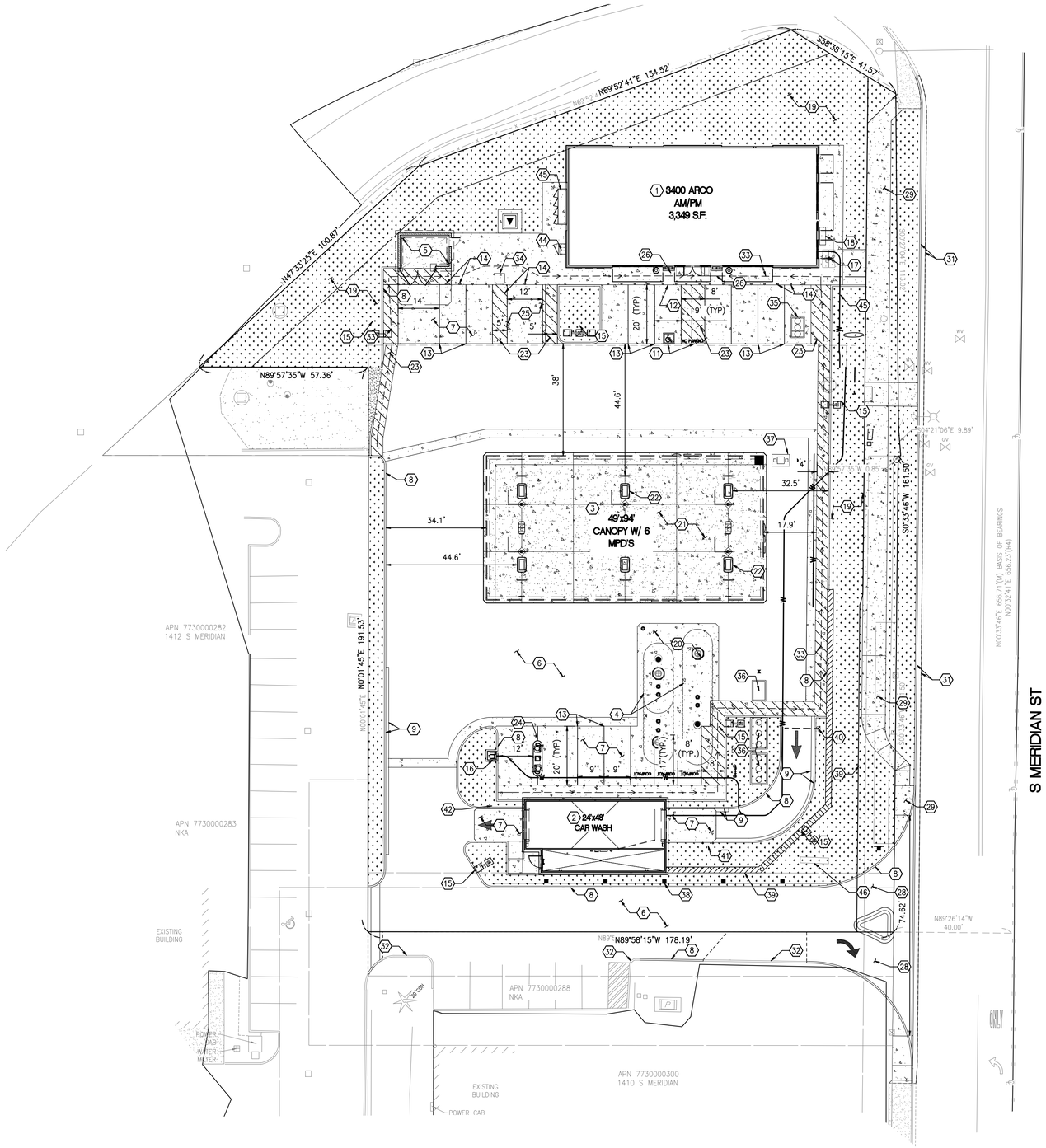

N

0 10' 20' 40'

SCALE: 1"=20'

GENERAL NOTES

1. SEE CIVIL FOR ADDITIONAL INFO
2. SEE ELECTRICAL FOR ADDITIONAL INFO

CLIENT:

bp

ARCO

BP WEST COAST PRODUCTS, LLC

Barghausen Consulting Engineers, Inc.

18215 72nd Avenue South
Kent, WA 98032
425.251.6222
barghausen.com

NO.	DATE	REVISION DESCRIPTION
1		
2		
3		
4		
5		
6		
7		
8		
9		
10		
11		
12		

SEAL:

10697 REGISTERED ARCHITECT DANIEL B COALWIN STATE OF WASHINGTON

EXP: 08/05/24

DEVELOPMENT INFORMATION:

ARCO NTI

3400 am/pm
FUEL CANOPY w/ 6 MPD's

SITE ADDRESS:

1402 S MERIDIAN
PUYALLUP, WA 98371

FACILITY #7184

DESIGNED BY:	ALLIANCE Z&DM:
CHECKED BY:	BP REPM:
DRAWN BY:	ALLIANCE PM:
VERSION: - -	PROJECT NO: 21730

DRAWING TITLE:

ARCHITECTURAL SITE PLAN

SHEET NO:

AS1.0

BUILDING SIDE

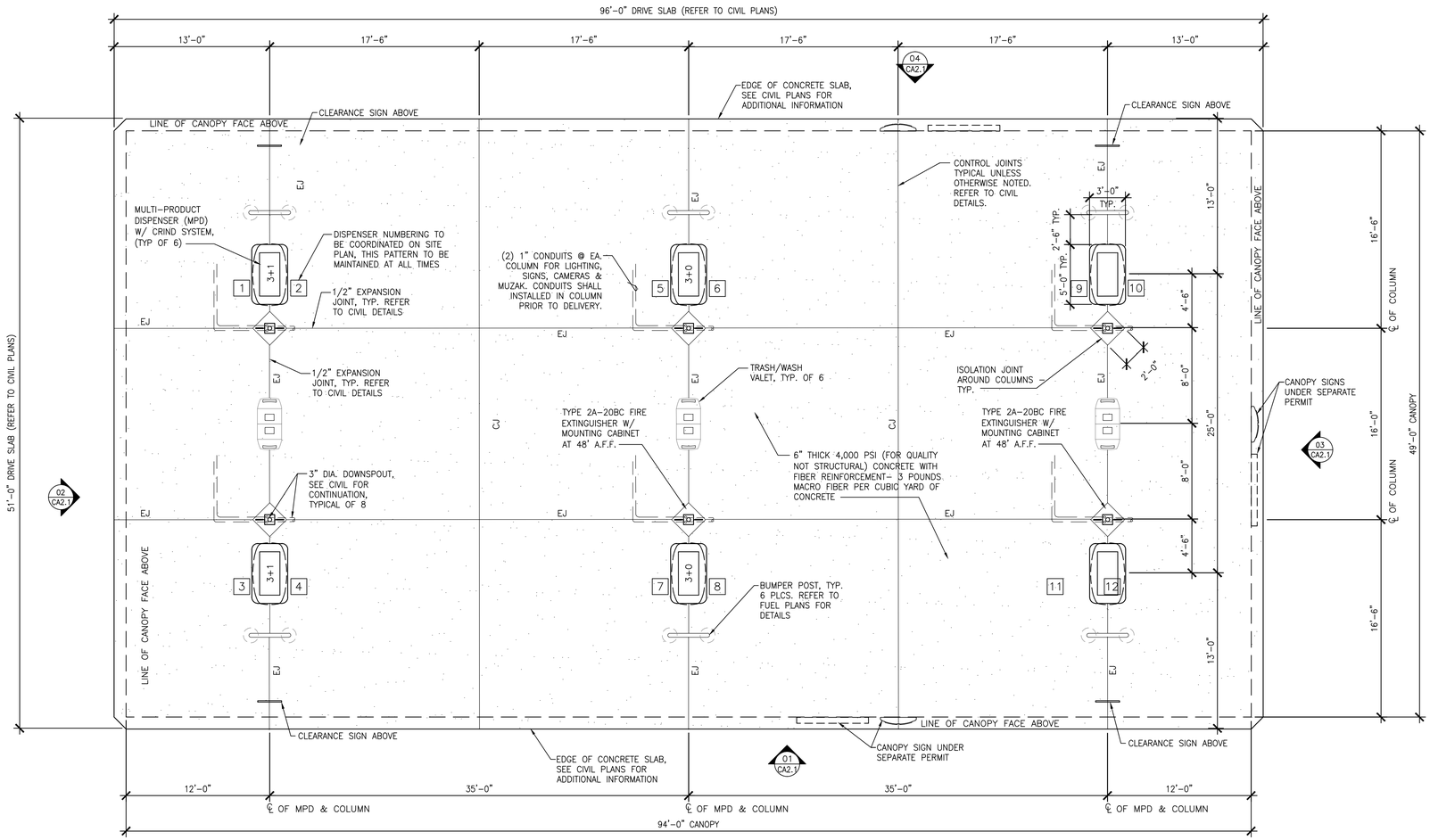

01 – **CANOPY SLAB PLAN**
SCALE: 3/16"=1'-0"

N

CLIENT:

bp

ARCO
BP WEST COAST PRODUCTS, LLC

Barghausen Consulting Engineers, Inc.
18215 72nd Avenue South
Kent, WA 98032
425.251.6222
barghausen.com

NO.	DATE	REVISION DESCRIPTION
1		
2		
3		
4		
5		
6		
7		
8		
9		
10		
11		
12		

SEAL:

10697
REGISTERED ARCHITECT
DANIEL B GOALWIN
STATE OF WASHINGTON
EXP: 08/05/24

DEVELOPMENT INFORMATION:

ARCO NTI
3400 am/pm
FUEL CANOPY w/ 6 MPD's

SITE ADDRESS:

1402 S MERIDIAN
PUYALLUP, WA 98371

FACILITY #7184

DESIGNED BY:	ALLIANCE Z&DM:
CHECKED BY:	BP REPM:
DRAWN BY:	ALLIANCE PM:
VERSION: - -	PROJECT NO: 21730

DRAWING TITLE:

CANOPY SLAB PLAN

SHEET NO:

CA1.1

File\\Jacobs-GAS Projects\21000s\21730\architecture\21730 CA1.1.dwg Date/Time:8/29/2023 9:36 AM Scale:1'-0" = 1'-0" KNIGHT Ref: ----

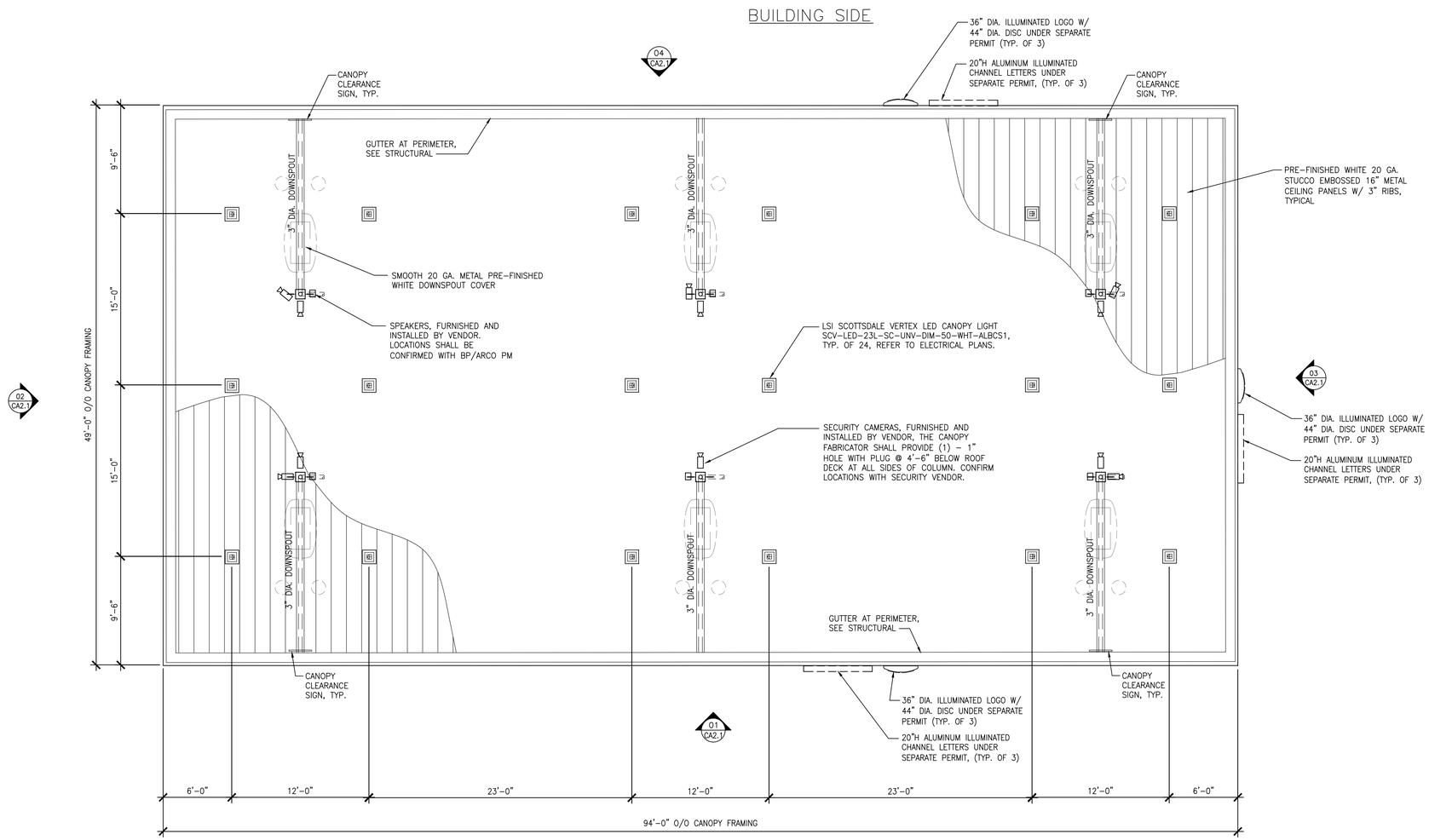

01 CANOPY REFLECTED CEILING PLAN

SCALE: 3/16"=1'-0"

N

CLIENT:

bp

ARCO

BP WEST COAST PRODUCTS, LLC

Barghausen Consulting Engineers, Inc.

18215 72nd Avenue South
Kent, WA 98032
425.251.6222
barghausen.com

NO.	DATE	REVISION DESCRIPTION
1		
2		
3		
4		
5		
6		
7		
8		
9		
10		
11		
12		

SEAL:

10697 REGISTERED ARCHITECT
DANIEL B GOALWIN
STATE OF WASHINGTON
EXP: 08/05/24

DEVELOPMENT INFORMATION:

ARCO NTI

3400 am/pm
FUEL CANOPY w/ 6 MPD's

SITE ADDRESS:

1402 S MERIDIAN
PUYALLUP, WA 98371

FACILITY #7184

DESIGNED BY:	ALLIANCE ZADM:
CHECKED BY:	BP REPM:
DRAWN BY:	ALLIANCE PM:
VERSION: - -	PROJECT NO: 21730

DRAWING TITLE:

CANOPY REFLECTED CEILING PLAN

SHEET NO:

CA1.2

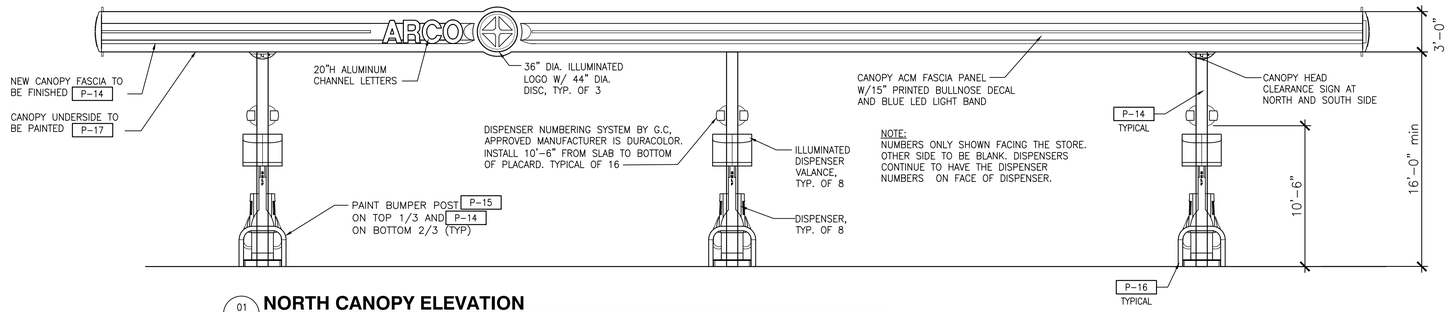

01 – **NORTH CANOPY ELEVATION**
SCALE: 3/16"=1'-0"
FACING C-STORE

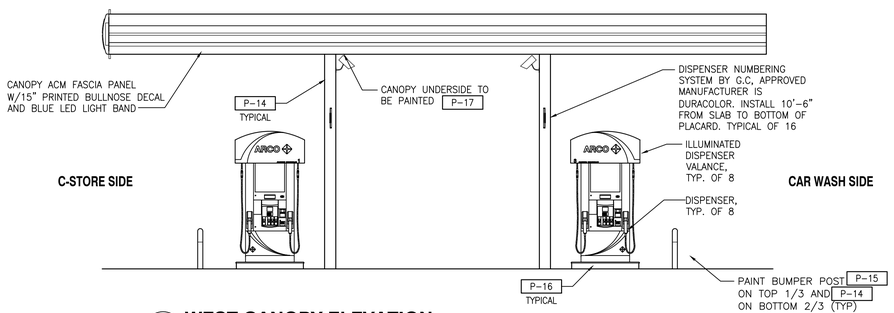

03 – **WEST CANOPY ELEVATION**
SCALE: 3/16"=1'-0"
FACING MOTEL

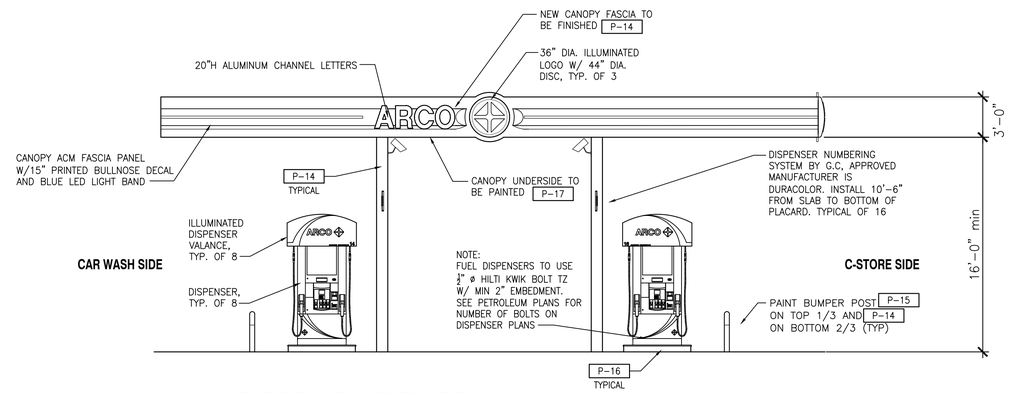

02 – **EAST CANOPY ELEVATION**
SCALE: 3/16"=1'-0"
FACING SOUTH MERIDIAN

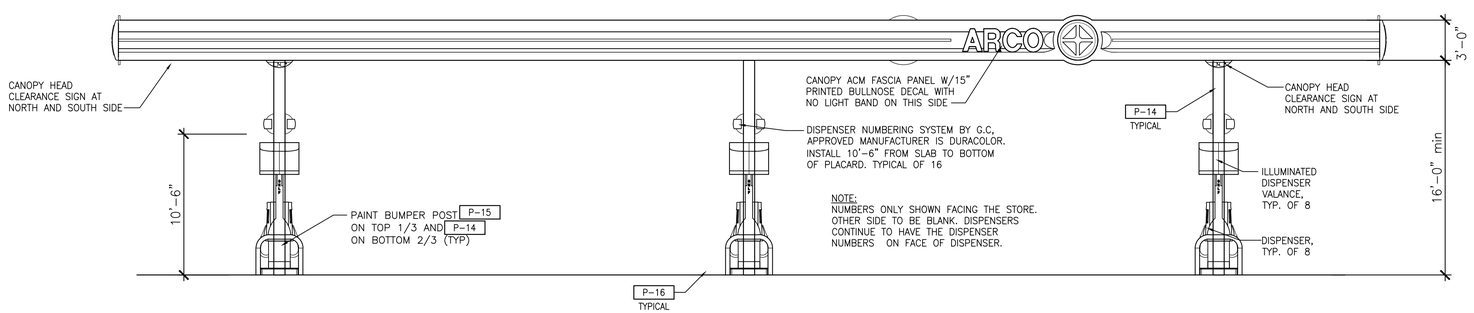

04 – **SOUTH CANOPY ELEVATION**
SCALE: 3/16"=1'-0"
FACING CAR WASH

SIGNAGE NOTE:
ALL SIGNAGE SHOWN IS FOR VISUAL REFERENCE ONLY– SIGN PERMIT UNDER SEPARATE PERMIT

CLIENT:
bp
ARCO
BP WEST COAST PRODUCTS, LLC

Barghausen Consulting Engineers, Inc.
18215 72nd Avenue South
Kent, WA 98032
425.251.6222
barghausen.com

NO.	DATE	REVISION DESCRIPTION
1	12-16-22	ENTITLEMENTS RESUBMITTAL 01
2		
3		
4		
5		
6		
7		
8		
9		
10		
11		
12		

SEAL:
10697 REGISTERED ARCHITECT
DANIEL B COALMAN
STATE OF WASHINGTON
EXP: 08/05/24

DEVELOPMENT INFORMATION:
ARCO NTI
3400 am/pm
FUEL CANOPY w/ 8 MPD's

SITE ADDRESS:
SWC S MERIDIAN
@ HIGHWAY 512
PUYALLUP, WASHINGTON

FACILITY #TBD

DESIGNED BY:	ALLIANCE ZAOM:
CHECKED BY:	BP REPM:
DRAWN BY:	ALLIANCE PM:
VERSION: - -	PROJECT NO: 21730

DRAWING TITLE:
CANOPY ELEVATIONS

SHEET NO:
CA2.1

JKNIGHT Xref: ---- Scale:1:1 KNIGHTPM 2023.10.26 14:19:07 -8:00 C:\Users\jknight\Desktop\21730-SWC-S-Meridian_R23.dwg

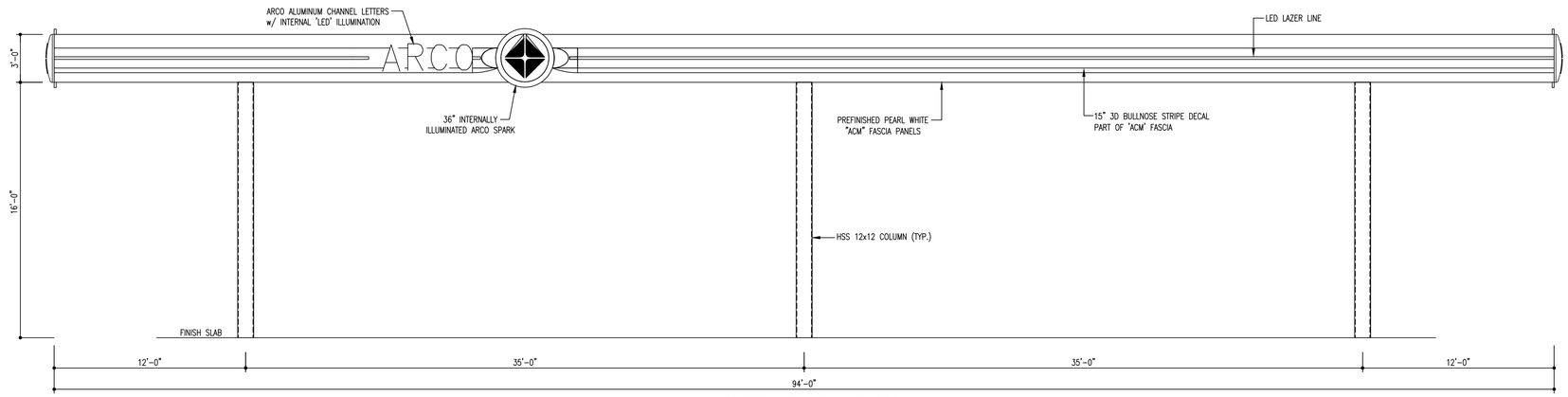

NORTH ELEVATION

1/4" = 1'-0"

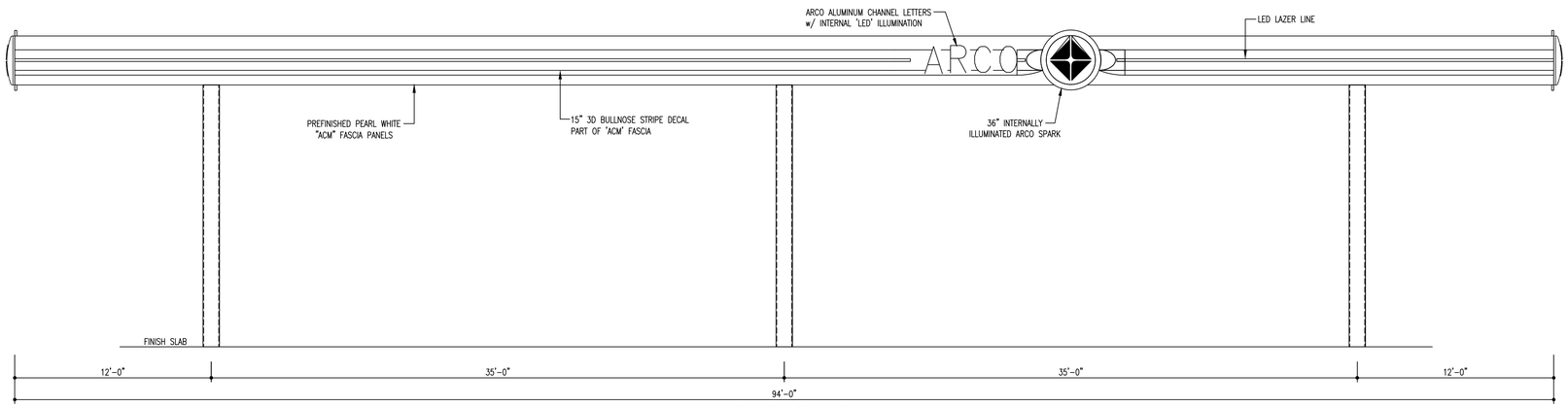

SOUTH ELEVATION

1/4" = 1'-0"

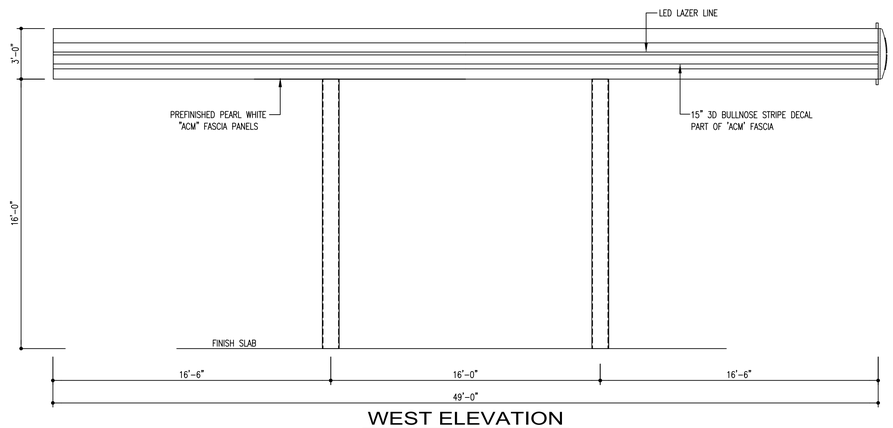

WEST ELEVATION

1/4" = 1'-0"

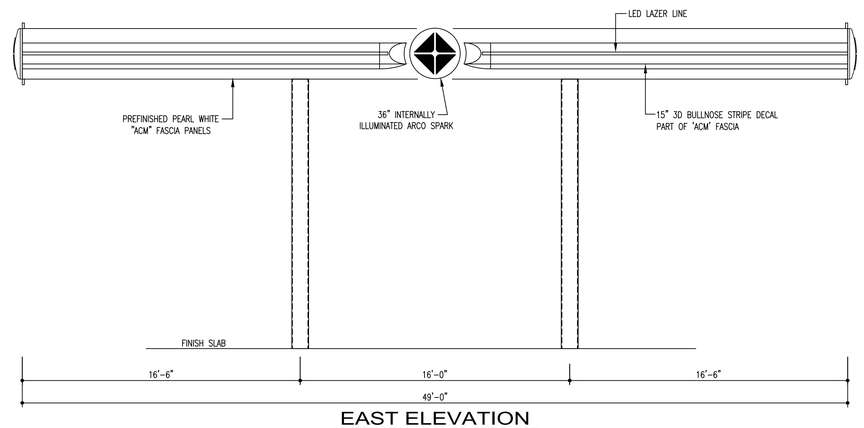

EAST ELEVATION

1/4" = 1'-0"

10-04-2023

PBI
Perry Builders, Inc.

Perry Builders, Inc.
12405 Locksley Lane Auburn, CA 95602
Phone (530) 745-0580
WWW.PERRYBUILDERSINC.COM
State License #731569

SCALE: – = 1'-0" UNLESS NOTED.	DESIGN BY: L. HARRINGTON	DATE: 9-14-23

REV.	DATE	DESCRIPTION	REV. BY
△			
△			
△			
△	–	–	–

SITE ADDRESS: SWC S. MERIDIAN @ HWY. 512
PUYALLUP, WASHINGTON

SHN.

TITLE:

ARCO

49'-0" x 94'-0" (6) COLUMN CANOPY
ARCHITECTURAL ELEVATIONS

PROJECT NO: C##-00####

DRAWING: CA1

REVISION: △

SHEET:

OF: –

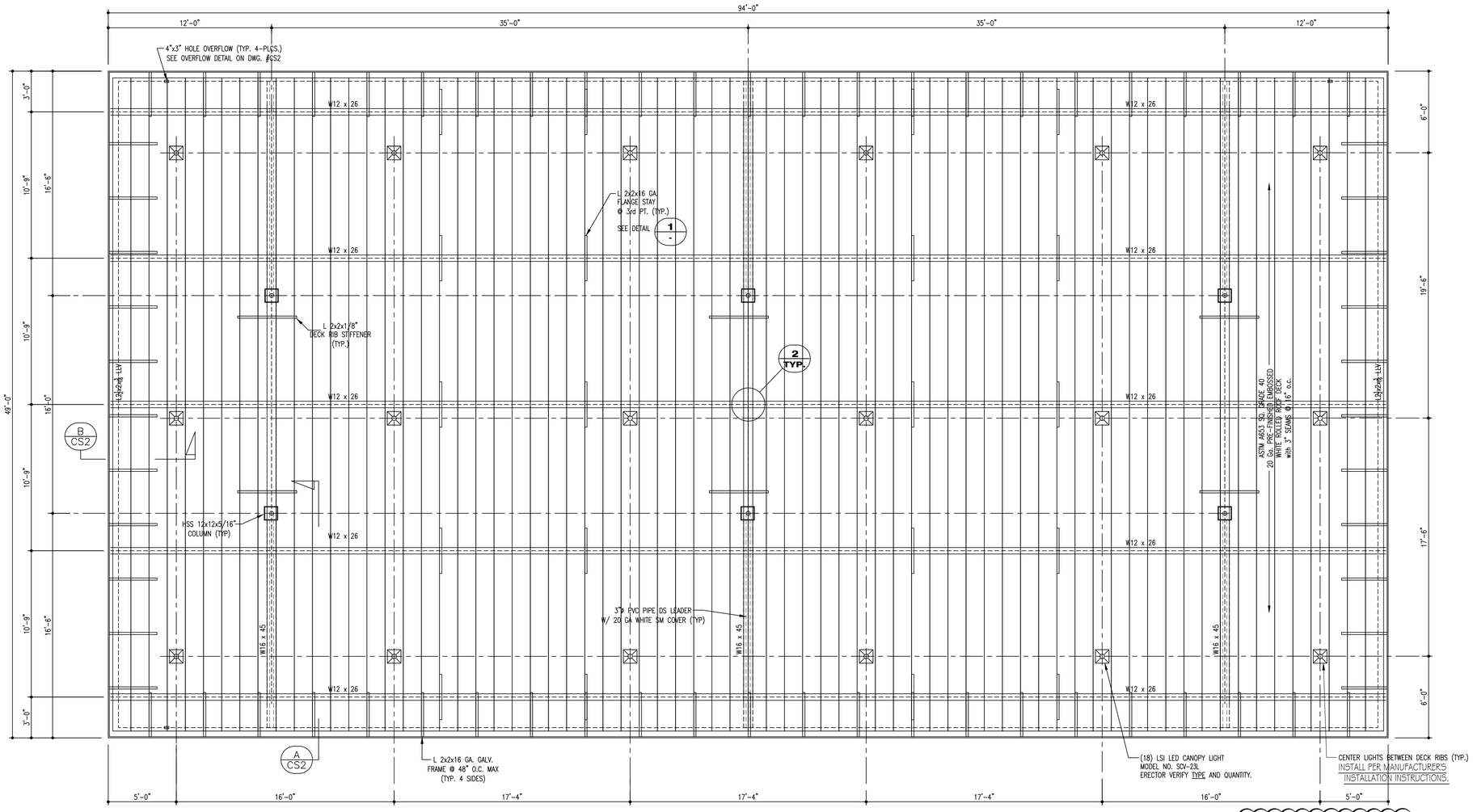

FRAMING PLAN

SCALE: 1/4" = 1'-0

NOTE:
BE SURE TO MISS ANY STEEL OR FASCIA BRACKETS ABOVE WHEN CUTTING OPENINGS IN DECK. OPENINGS TO BE CENTERED ON DECK PANS.

STRUCTURAL NOTES:

1. CODE 2018 IBC
2. ROOF LIVE LOAD = 20PSF
3. WIND ---94 M.P.H., EXPOSURE B
4. SEISMIC--
   RISK CATEGORY=2
   Ss=1.268, S1=0.437
   SITE CLASS = D
   SDS=1.014, SD1=0.543
   DESIGN CATEGORY = D
   R=1.25 ORDINARY CANTILEVERED COLUMN
   VE=Cs*W=0.812*W
   EQUIV. FORCE ANAYLSIS USED
5. SOIL CAPACITY 1500 PSF
6. CONCRETE FOOTING---f'c=3000 PSI
7. REINFORCING STEEL--ASTM A615, GRADE 60, FY=60KSI
8. HOT ROLLED STEEL SHAPES & PLATE--ASTM36, FY=36KSI
   (EXCEPT "W" SHAPES ARE ASTM A992, FY=50 KSI)
9. STRUCTURAL TUBING---ASTM500 GRADE B, Fy=46KSI
10. ALL STRUCTURAL STEEL TO BE RED PRIME PAINTED
11. COLD ROLLED STEEL SHEET, GALVANIZED--ASTM A653 SQ, GRADE 40, Fy=40 KSI.
12. ANCHOR RODS---ASTM F1554 GR. 36, Fy = 36 KSI
13. WELDS---E70 ELECTRODES-ALL WELDS BY CERTIFIED WELDERS
14. BOLTS---ASTM A307 UNLESS NOTED.
15. NON-SHRINK GROUT= 5000 PSI MIN.
16. CONTRACTOR TO VERIFY AND CONFIRM ALL DIMENSIONS AND CONDITIONS AND NOTIFY ENGINEER OF ANY DISCREPANCIES PRIOR TO START OF WORK. ALL WORK TO BE IN ACCORDANCE WITH ALL APPLICABLE CODES AND STANDARDS.
17. ALL SCREWS AND BOLTS THRU DECK SHALL HAVE TOP SEALS.
18. ALL FLASHING, GUTTERS, ETC. SHALL BE CONSTRUCTED TO BE LEAK TIGHT AT THEIR JOINTS OR SEAMS BY USE OF MASTIC.
19. FABRICATION AND ERECTION OF STRUCTURAL STEEL SHALL BE DONE IN ACCORDANCE WITH THE AISC SPECIFICATION.
20. THE ELEVATION AND DIRECTION OF THE CANOPY DRAIN PIPES IS PER THE ARCHITECT'S/CIVIL ENGINEER'S DRAWINGS.
21. LOCATION AND SIZE OF CANOPY LIGHTS AND ELECTRICAL CONDUITS IS PER THE ARCHITECT'S/ELECTRICAL ENGINEER'S DRAWINGS.

SPECIAL INSPECTIONS & STRUCTURAL OBSERVATION:

1. CONCRETE – NOT REQ'D. PER 1705.3, EXCEPTION 1.
2. WELDING – REQ'D. UNLESS DONE BY A FABRICATOR APPROVED BY THE JURIDICTION. PERIODIC INSPECTION IS REQ'D. FOR ALL SINGLE PASS FILLET WELDS. THERE ARE NO FIELD WELDS.
3. PERIODIC INSPECTION IS REQ'D. TO VERIFY MEMBER SIZES AND JOINT DETAILS.
4. STRUCTURAL OBSERVATION IS NOT REQ'D. UNLESS MANDATED BY THE BUILDING OFFICIAL.

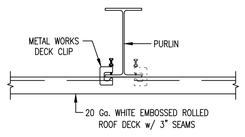

METAL WORKS DECK CLIP DETAIL

ERECTOR NOTE:
INSTALL DECK CLIPS ON CANTILEVER SIDE OF DECK @ OUTSIDE PURLINS AND ALTERNATING SIDES BETWEEN THE FIRST AND LAST DECK RIBS @ INTERIOR PURLINS. (2) DECK CLIPS @ FIRST AND LAST (4) DECK RIBS @ EACH PURLIN.

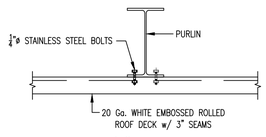

ALTERNATE 1/4"ø BOLTS TO DECK DETAIL

ERECTOR NOTE:
INSTALL 1/4"Ø STAINLESS STEEL BOLTS ON CANTILEVER SIDE OF DECK @ OUTSIDE PURLINS AND ALTERNATING SIDES BETWEEN THE FIRST AND LAST DECK RIBS @ INTERIOR PURLINS. (2) 1/4"Ø BOLTS @ FIRST AND LAST (4) DECK RIBS @ EACH PURLIN.

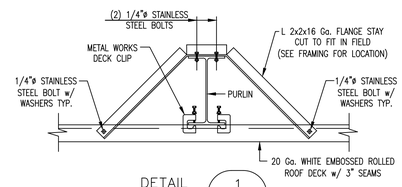

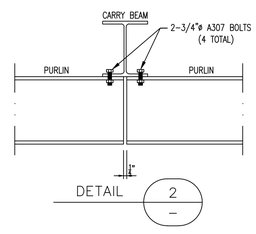

DARREN D. TRUCHOT
STATE OF WASHINGTON
40683
REGISTERED
PROFESSIONAL ENGINEER
10-04-2023

PBI
Perry Builders, Inc.

Perry Builders, Inc.
12405 Locksley Lane Auburn, CA 95602
Phone (530) 745-0580
WWW.PERRYBUILDERSINC.COM
State License #731569

SCALE: – = 1'-0" UNLESS NOTED.	DESIGN BY: L. HARRINGTON	DATE: 9-14-23

REV.	DATE	DESCRIPTION	REV. BY
△			
△			
△			
△	–	–	–

SITE ADDRESS: SWC S. MERIDIAN @ HWY. 512
PUYALLUP, WASHINGTON

SHN.

TITLE: **ARCO**
49'-0" x 94'-0" (6) COLUMN CANOPY
FRAMING PLAN

PROJECT NO: C##-00####
DRAWING: CS1
REVISION: △
SHEET:
OF: –

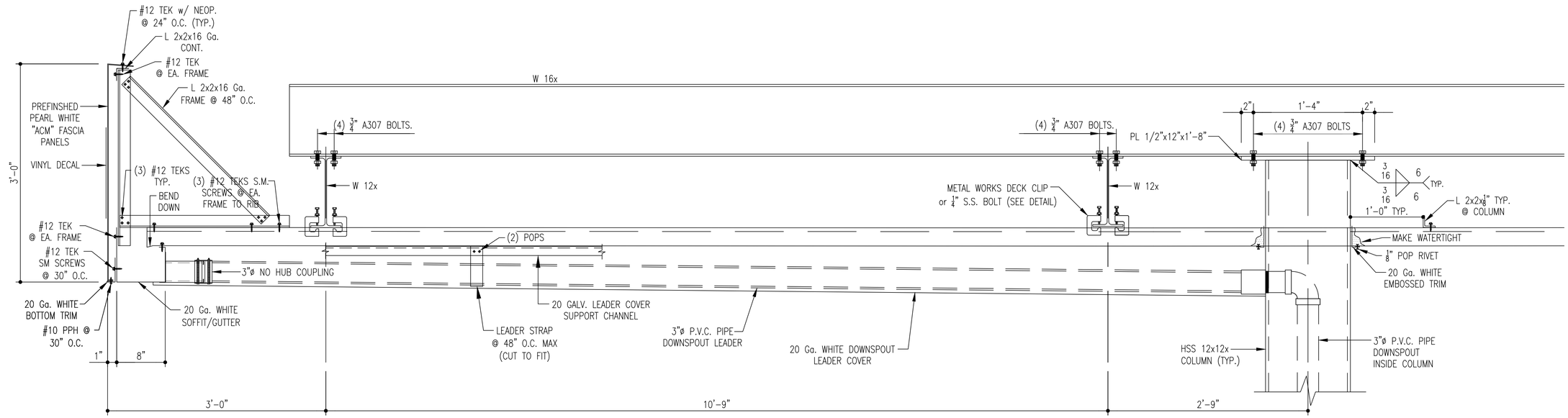

SECTION A / CS1
SCALE: 1 1/2" = 1'-0

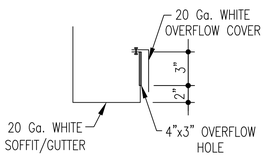

OVERFLOW DETAIL

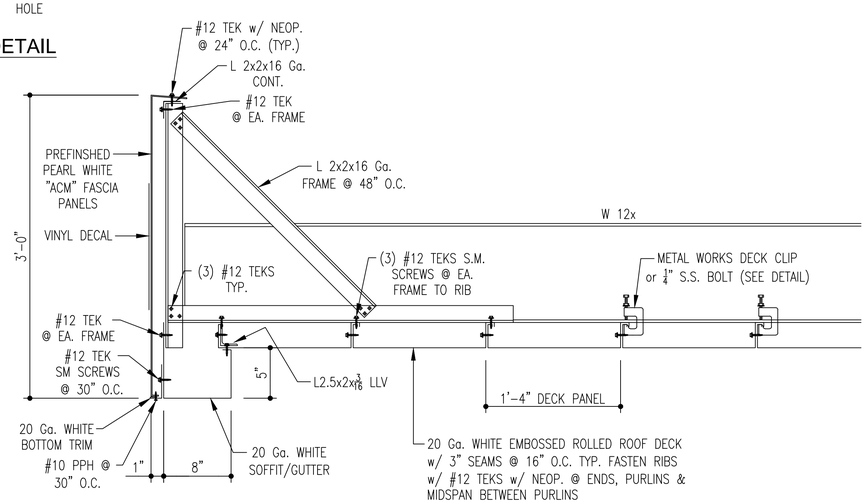

SECTION B / CS1
SCALE: 1 1/2" = 1'-0

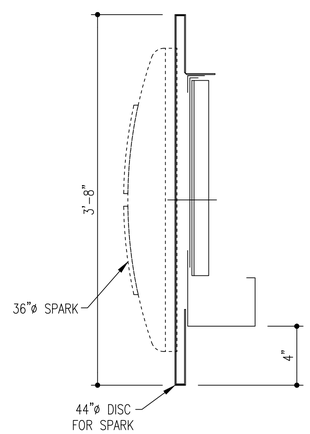

SECTION thru SPARK

DARREN D. TRUCHOT
STATE OF WASHINGTON
40683
REGISTERED
PROFESSIONAL ENGINEER
10-04-2023

PBI Perry Builders, Inc.

Perry Builders, Inc.
12405 Locksley Lane Auburn, CA 95602
Phone (530) 745-0580
WWW.PERRYBUILDERSINC.COM
State License #731569

SCALE: – = 1'-0" UNLESS NOTED. | DESIGN BY: L. HARRINGTON | DATE: 9-14-23

REV.	DATE	DESCRIPTION	REV. BY
–	–	–	–

SITE ADDRESS: SWC S. MERIDIAN @ HWY. 512
PUYALLUP, WASHINGTON

SHN.

TITLE: **ARCO**
49'-0" x 94'-0" (6) COLUMN CANOPY
SECTIONS

PROJECT NO: C##-00####
DRAWING: CS2
REVISION:
SHEET:
OF: –

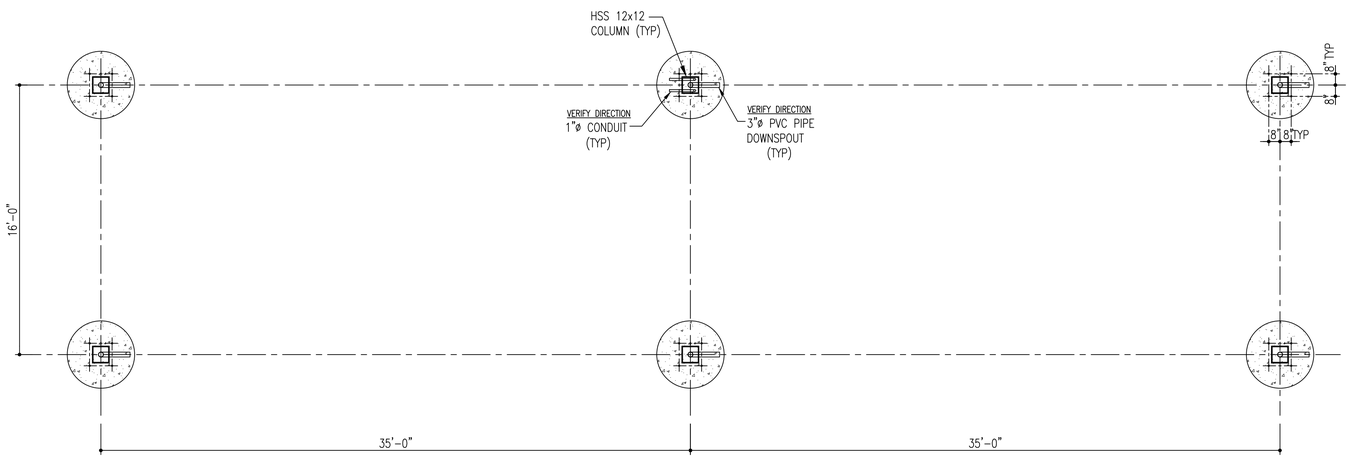

FOUNDATION PLAN

SCALE: 1/4" = 1'-0

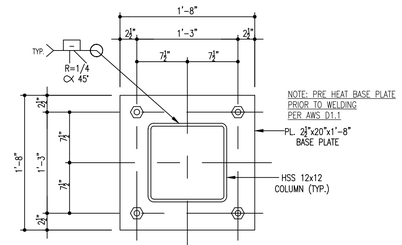

TYPICAL BASE PLATE DETAIL

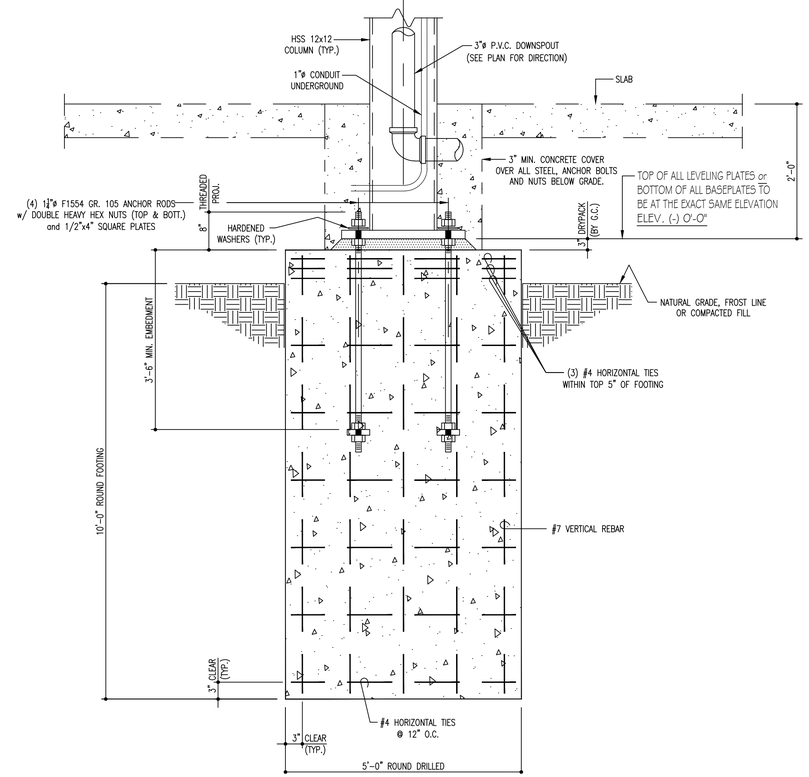

TYP. FOOTING SECTION

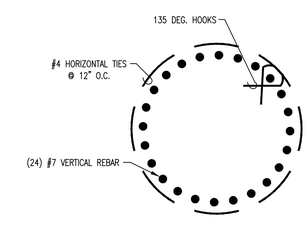

ROUND FOOTING
REINFORCING DETAILS

NOTES:

1. IT IS THE OWNER'S/GENERAL CONTRACTORS RESPONSIBILITY TO CONVEY TO ALL CONTRACTORS THAT IT IS THEIR RESPONSIBILITY TO INSURE THAT THE SITE IS PROPERLY EXCAVATED AND GRADED. DURING CONCRETE FORMING AND AFTER THE POUR, THE CONCRETE SHOULD BE CHECKED FOR PROPER ELEVATION, LEVEL SQUARE AND CORRECT DIMENSIONS.
2. THE MOST CRITICAL PHASE OF FOUNDATION PREPARATION IS IN THE PRECISE LOCATION OF ANCHOR BOLTS. MEASUREMENTS FOR ANCHOR BOLTS PLACEMENT MUST BE EXACT AND SHOULD BE RECHECKED TO ASSURE PROPER LOCATION.
3. CORRECTION OF LOCATION, OF ELEVATION AND OF DIMENSIONAL ERRORS MUST BE MADE PRIOR TO THE ARRIVAL OF THE ERECTING CREWS AND PRIOR TO THE ERECTION OF THE STRUCTURE.
4. AFTER THE FORMS HAVE BEEN REMOVED, ALL THE TRENCHES, HOLES AND UNEVEN SITE CONDITIONS MUST BE LEVELED TO INSURE A SAFE WORKING AND ACCESS AREA, ACCEPTABLE TO LOCAL, STATE, FEDERAL AND O.S.H.A. AGENCIES.
5. PRIOR TO POURING FOUNDATIONS PLEASE CALL STRUCTURE FABRICATOR AND REQUEST SIGNED APPROVED FOUNDATION DRAWINGS WITH THE ESTABLISHED ELEVATIONS AND FOOTING DEPTH DIMENSIONS.
6. TOP OF ALL ANCHOR BOLT LEVELING PLATES TO BE AT THE SAME ELEVATION. SEE SIGNED FOUNDATION DRAWINGS FOR THE ELEVATION.

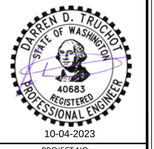

10-04-2023

PBI Perry Builders, Inc.

Perry Builders, Inc.
12405 Locksley Lane Auburn, CA 95602
Phone (530) 745-0580
WWW.PERRYBUILDERSINC.COM
State License #731569

SCALE: – = 1'-0" UNLESS NOTED.	DESIGN BY: L. HARRINGTON	DATE: 9-14-23

REV.	DATE	DESCRIPTION	REV. BY
△			
△			
△			
△	–	–	–

SITE ADDRESS: SWC S. MERIDIAN @ HWY. 512
PUYALLUP, WASHINGTON

SHN.

TITLE: **ARCO**
49'-0" x 94'-0" (6) COLUMN CANOPY
FOUNDATION PLAN

PROJECT NO: C##-00####

DRAWING: CF1

REVISION: △

SHEET:

OF: –

GENERAL NOTES:

1. ELECTRICAL CONTRACTOR SHALL COORDINATE WITH POWER COMPANY FOR EXACT SERVICE CONNECTION REQUIREMENTS AND INCLUDE ALL NECESSARY COST IN BID.
2. ELECTRICAL CONTRACTOR SHALL COORDINATE WITH TELEPHONE COMPANY FOR EXACT SERVICE CONNECTION REQUIREMENTS AND INCLUDE ALL NECESSARY COST IN BID.
3. ALL ELECTRICAL EQUIPMENT SHALL HAVE AIC RATINGS EQUIVALENT OR HIGHER THAN AVAILABLE FAULT CURRENTS PROVIDED BY POWER COMPANY.
4. A UTILITY LOCATE SHALL BE PERFORMED PRIOR TO COMMENCEMENT OF TRENCHING.
5. LIGHTING CONTACTOR (INTERIOR LIGHTING ONLY) IS LOCATED WITHIN CPI CABINET.
6. ALL LIGHTING FIXTURES TO BE FURNISHED AND INSTALLED BY CONTRACTOR.
7. 'EM' AT LIGHT FIXTURE INDICATES LIGHT FIXTURE WITH EMERGENCY BACK UP. ALL EMERGENCY LIGHT FIXTURES SHALL BE SERVED FROM BATTERY BACKUP. EMERGENCY AND EXIT LIGHTS SHALL BE INSTALLED AND CIRCUITED PER THE LATEST CALIFORNIA ELECTRICAL CODE AND ALL LOCAL CODES (INSTALL A CENTRAL BATTERY SYSTEM WHERE THE USE OF INDIVIDUAL BATTERY UNITS ARE PROHIBITED BY LOCAL CODES). ALL EMERGENCY FIXTURES AND EXIT SIGNS SHALL BE CONNECTED TO UN-SWITCHED HOT LEG OF THE LOCAL LIGHTING CIRCUIT.
8. ALL EXTERIOR LIGHT FIXTURES TO BE CONTROLLED THROUGH THE LSI AIRLINK BLUE COMPLETE OUTDOOR LIGHTING WIRELESS MESH SYSTEM. AIRLINK BLUE SYSTEM INCLUDES DAYLIGHT AND MOTION SENSORS WITH DIMMING CONTROL CAPABLE OF AUTOMATICALLY SHUTTING OFF OUTDOOR LIGHTING WHEN DAYLIGHT IS AVAILABLE, EMPLOY AUTO FUNCTIONALITY WHEN AREA BECOMES OCCUPIED, AND CAPABLE OF PROVIDING CONTINUOUS DIMMING THROUGH A 50%-90% RANGE PER 2018 WSEC REQUIREMENTS. AIRLINK BLUE SYSTEM TO INCLUDE ASTRONOMICAL CLOCK AND TIME KEEPER AIRLINK BLUE COMPONENT FOR SCHEDULING CONTROLS SET PER 2018 WSEC REQUIREMENTS. ALL EXTERIOR LUMINAIRES TO INCLUDE FACTORY INTEGRATED BLUETOOTH RADIO/SENSOR CONTROLLERS. AIRLINK BLUE SYSTEM TO BE INITIALIZED VIA WEB APP AND FIELD COMMISSIONED VIA MOBILE APP TO THE OWNER'S REQUIREMENTS. ANY CHANGES OR UPDATES TO BE ACCOMPLISHED ON SITE VIA MOBILE APP.

SHEET NOTES:

1. PROVIDE NEW LIGHT FIXTURE. INSTALL 3/4" PVC UNDERGROUND CONDUIT CONTAINING: (2) #10 THWN CU. AND (1) #10 CU EGC. FOR PARKING LOT LIGHTING. EXTEND CONDUIT BACK TO AIRLINK BLUE CONTROLS.
2. PROVIDE AND INSTALL ESO SWITCH. INCLUDE ALL ASSOCIATED CONDUIT AND WIRE FOR COMPLETE INSTALLATION PER CEC 514.11 AND NFPA 30A SECTION 6.7. RUN WIRE IN 1" PVC-COATED RGS CONDUIT AND STUB UP WITH RGS. SEE DETAIL 3/E2.3. COORDINATE EXACT LOCATION WITH OWNER PRIOR TO INSTALLATION. SEE DETAIL IN TANK DRAWINGS FOR ELEVATION.
3. PROVIDE AND INSTALL ESO SWITCH. COORDINATE EXACT LOCATION(S) WITH OWNER PRIOR TO INSTALLATION.
4. PROVIDE 3/4" PVC UNDERGROUND CONDUIT AND (3) #10 THHN CU. WIRE (U.O.N.) FOR NEW AIR STATION. MAKE CONNECTION WITH WATER TIGHT FLEX, BOXES AND COVERS AS REQUIRED BY MANUFACTURER. FIELD VERIFY EXACT LOCATION WITH OWNER PRIOR TO INSTALLATION.
5. PROVIDE (1) 3" PVC CONDUIT WITH 1/4" PULL STRING FOR TELEPHONE. FIELD VERIFY EXACT VAULT LOCATION WITH SERVICE PROVIDER PRIOR TO INSTALLATION.
6. PROVIDE (1) 1-1/2" CONDUIT FOR INSTALLATION OF ELECTRIC VEHICLE CHARGING STATION. 100A 208 VOLT 3Ø MIN. CAP AND MARK CONDUIT AS REQUIRED FOR ACCESS.
7. PROVIDE (2) 1" PVC-COATED RGS SPARE UNDERGROUND CONDUITS TO FOR FUTURE VENT DIAGNOSTICS TO INTRINSICALLY SAFE AND POWER WIREWAYS INSIDE STORE (NEXT TO EPC CABINET).
8. ALL SITE LIGHT POLE FIXTURES TO INCLUDE LSI AIRLINK BLUE LIGHTING SYSTEM MOTION DETECTOR MOUNTED ON LIGHT POLE. UPON ACTIVATION OF EITHER MOTION DETECTOR, ALL SITE POLE LIGHTS TO TRIGGER AT FULL BRIGHTNESS AND RETURN TO 50% BRIGHTNESS AFTER 15 MINUTES OF VACANCY.
9. 60W HEAT TRACER LOCATED IN RPBA HOT BOX, REFER TO CIVIL UTILITY PLANS FOR EXACT LOCATION.
10. PROPOSED SOLAR ZONE PER 2018 WSEC REQUIREMENTS.
11. PROVIDE (1) 3/4" CONDUIT AND CONTROL WIRE TO CLOSEST EMERGENCY STOP BUTTON FOR CONNECTION TO VEHICLE CHARGING STATION.
12. PROPOSED UTILITY TRANSFORMER EXACT LOCATION TO BE VERIFIED.

N.E.C HAZARDOUS AREA NOTES

A) TYPICAL N.E.C. ARTICLE 514 CLASS 1 LOCATION (UNDERGROUND TANK - FILL OPENING)
EXTENT OF CLASS 1, GROUP D, DIVISION 1 LOCATION:
Any pit, box, or space below grade level, any part of which is within the Division 1 or 2 classified location.
EXTENT OF CLASS 1, GROUP D, DIVISION 2 LOCATION:
Up to 18 inches above grade level within a horizontal radius of 10 feet from a loose fill connection and within a horizontal radius of 5 feet from a tight fill connection.

B) TYPICAL N.E.C. ARTICLE 514 CLASS 1 LOCATION (UNDERGROUND TANK VENT DISCHARGING UPWARD)
EXTENT OF CLASS 1, GROUP D, DIVISION 1 LOCATION:
Within 3 feet of open end of vent, extending in all directions.
EXTENT OF CLASS 1, GROUP D, DIVISION 2 LOCATION:
Space between 3 feet and 5 feet of open end of vent, extending in all directions.

C) TYPICAL N.E.C. ARTICLE 514 CLASS 1 LOCATION (REMOTE PUMP - OUTDOOR)
EXTENT OF CLASS 1, GROUP D, DIVISION 1 LOCATION:
Any pit, box, or space below grade level if any part is within a horizontal distance of 10 feet from any edge of pump.
EXTENT OF CLASS 1, GROUP D, DIVISION 2 LOCATION:
Within 3 feet of any edge of pump, extending in all directions. Also up to 18 inches above grade level within 10 feet horizontally from any edge of pump.

D) TYPICAL N.E.C. ARTICLE 514 CLASS 1 LOCATION (DISPENSING DEVICE - PITS)
EXTENT OF CLASS 1, GROUP D, DIVISION 1 LOCATION:
Any pit, box, or space below grade level, any part of which is within the Division 1 or 2 classified location.

E) TYPICAL N.E.C. ARTICLE 514 CLASS 1 LOCATION (DISPENSING DEVICE - DISPENSER)
EXTENT OF CLASS 1, GROUP D, DIVISION 1 LOCATION:
Space classification inside the dispenser enclosure is covered in ANSI/UL 87, "Power Operated Dispensing Devices for Petroleum Products."

F) TYPICAL N.E.C. ARTICLE 514 CLASS 1 LOCATION (DISPENSING DEVICE - DISPENSER)
EXTENT OF CLASS 1, GROUP D, DIVISION 2 LOCATION:
Within 18 inches horizontally in all directions extending to grade from (1) the dispenser enclosure or (2) that portion of the dispenser enclosure containing liquid handling components. Space classification inside the dispenser enclosure is covered in ANSI/UL 87, "Power Operated Dispensing Devices for Petroleum Products."

G) TYPICAL N.E.C. ARTICLE 514 CLASS 1 LOCATION (DISPENSING DEVICE - OUTDOOR)
EXTENT OF CLASS 1, GROUP D, DIVISION 2 LOCATION:
Up to 18 inches above grade level within 20 feet horizontally of any edge of enclosure.

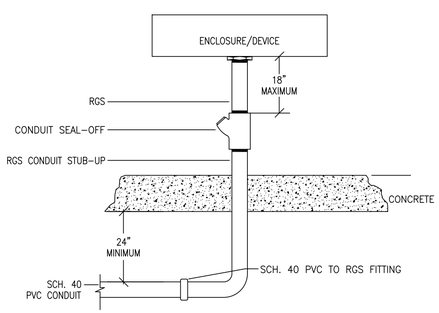

2 TYPICAL RGS STUB-UP W/ SEAL OFF

SCALE: NTS

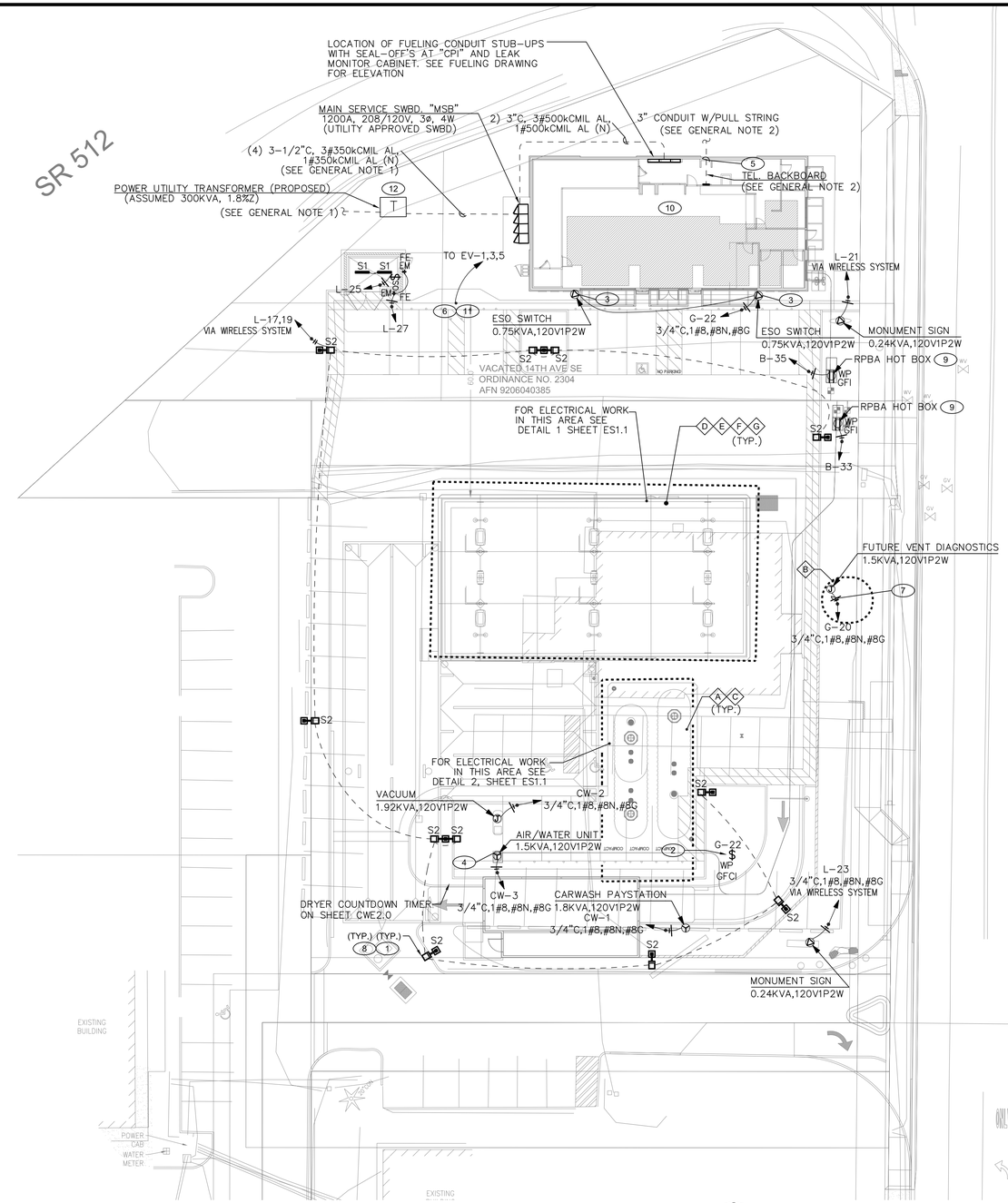

1 ELECTRICAL SITE PLAN

1"=20'

0 10 20 40

811 Know what's below. Call before you dig. Dial 811 (1-800-424-5555)

SITE LUMINAIRE SCHEDULE

CALLOUT	SYMBOL	LAMP	DESCRIPTION	BALLAST	MOUNTING	MODEL	INPUT VA	TOTAL VA	LUMENS / LAMP	VOLTS	NOTES	QUANTITY
S1	—	(1) 31.59W LED	SURFACE MOUNTED STRIP LIGHT	0-10V DIMMABLE	SURFACE	LSI EG3-4-LED-4L-DA-S-UNV-DIM-50-80	31.59	31.59	4508	120V 1P 2W	TRASH/RECYCLE ROOM W/ EMERGENCY BATTERY PACK FOR 90 MINUTE ILLUMINATION, 4508 LUMENS, 143.42 LUMENS/WATT	2
S2		(1) 63W LED	LED POLE LIGHT	ELECTRONIC	POLE	LSI SLM-LED-09L-SIL-FT-50-70CRI-SINGLE-16'POLE+2'BASE	63	63	9657	208V 2P 2W	PARKING LOT, INCLUDE LSI AIRLINK BLUE SENSOR.	6

ABOSSEIN #223054

Abossein Engineering, L.L.C.
MECHANICAL - ELECTRICAL
CIVIL - LEED
FIRE PROTECTION
18465 NE 68TH ST
REDMOND, WA 98052
PH: (425) 462-9441
FAX: (425) 462-9451
E-Mail: cservice@abossein.com
www.abossein.com

CLIENT:

bp

ARCO

BP WEST COAST PRODUCTS, LLC

Barghausen Consulting Engineers, Inc.
18215 72nd Avenue South
Kent, WA 98032
425.251.6222
barghausen.com

NO.	DATE	REVISION DESCRIPTION
1		
2		
3		
4		
5		
6		
7		
8		
9		
10		
11		
12		

SEAL:

ALEXANDER ABOSSEIN, STATE OF WASHINGTON, 21897, REGISTERED PROFESSIONAL ENGINEER

DEVELOPMENT INFORMATION:

ARCO NTI

3400 am/pm

FUEL CANOPY w/ 6 MPD's

SITE ADDRESS:

SWC S MERIDIAN

@ HIGHWAY 512

PUYALLUP, WASHINGTON

FACILITY #7184

DESIGNED BY:	ALLIANCE ZADM:
CHECKED BY:	BP REPM:
DRAWN BY:	ALLIANCE PM:
VERSION: - -	PROJECT NO: 21730

DRAWING TITLE:

ELECTRICAL SITE PLAN

SHEET NO:

ES1.0

GENERAL NOTES:

1. ALL EXTERIOR LIGHTING TO BE CONTROLLED BY LSI AIRLINK BLUE WIRELESS BLUETOOTH MESH OUTDOOR LIGHTING CONTROL SYSTEM. REFER TO LSI AIRLINK BLUE SPECIFICATION SHEETS FOR EXACT INFORMATION ON SYSTEM.
2. REFER TO TANK ELECTRICAL DRAWINGS FOR FUELING CONDUIT FILL AND WIRE TYPES.
3. SEE TANK ELECTRICAL DRAWINGS FOR FURTHER REQUIREMENTS.
4. ALL LIGHTING FIXTURES TO BE FURNISHED AND INSTALLED BY CONTRACTOR.
5. ALL EXTERIOR LIGHT FIXTURES TO BE CONTROLLED THROUGH THE LSI AIRLINK BLUE COMPLETE OUTDOOR LIGHTING WIRELESS MESH SYSTEM. AIRLINK BLUE SYSTEM INCLUDES DAYLIGHT AND MOTION SENSORS WITH DIMMING CONTROL CAPABLE OF AUTOMATICALLY SHUTTING OFF OUTDOOR LIGHTING WHEN DAYLIGHT IS AVAILABLE, EMPLOY AUTO FUNCTIONALITY WHEN AREA BECOMES OCCUPIED, AND CAPABLE OF PROVIDING CONTINUOUS DIMMING THROUGH A 50%-90% RANGE PER 2018 WSEC REQUIREMENTS. AIRLINK BLUE SYSTEM TO INCLUDE ASTRONOMICAL CLOCK AND TIME KEEPER AIRLINK BLUE COMPONENT FOR SCHEDULING CONTROLS SET PER 2018 WSEC REQUIREMENTS. ALL EXTERIOR LUMINAIRES TO INCLUDE FACTORY INTEGRATED BLUETOOTH RADIO/SENSOR CONTROLLERS. AIRLINK BLUE SYSTEM TO BE INITIALIZED VIA WEB APP AND FIELD COMMISSIONED VIA MOBILE APP TO THE OWNER'S REQUIREMENTS. ANY CHANGES OR UPDATES TO BE ACCOMPLISHED ON SITE VIA MOBILE APP.

FLAG NOTES:

(1) PROVIDE (6) 1" PVC-COATED RGS UNDERGROUND CONDUITS TO LEAK DETECTION PANEL.
- (3) 1" CONDUITS FOR TURBINE POWER
- (3) 1" INTRINSICALLY SAFE CONDUITS FOR TANK MONITORING

(2) PROVIDE (3) 1" PVC-COATED RGS UNDERGROUND CONDUITS FOR MUSAK AND SECURITY SYSTEMS. STUB IN COLUMN AND EXTEND CONDUITS BACK TO MUSAK AND SECURITY SYSTEMS LOCATED PER ARCO REPRESENTATIVE. ALL CONDUIT STUB-UPS SHALL BE RGS WITH SEAL OFFS AND MEET THE REQUIREMENTS SPECIFIED IN ARTICLE 514 OF THE NEC. FIELD VERIFY EXACT LOCATIONS.
- (2) 1" CONDUITS FOR MUSAK AND CAMERA WITH PULL ROPE
- (1) 1" CONDUIT FOR MUSAK LOOP TO EACH COLUMN

(3) PROVIDE (3) 1" PVC-COATED RGS UNDERGROUND CONDUITS FOR FUEL DISPENSER. ALL CONDUIT TO STUB-UP SHALL BE RGS WITH SEAL OFFS AND MEET THE REQUIREMENTS SPECIFIED IN ARTICLE 514 OF THE NEC. FIELD VERIFY EXACT LOCATION OF STUB-UPS. FIELD WRAP STEEL CONDUIT WITH A 100 MIL. COATING OF COAL TAR EPOXY.
- (1) 1" CONDUIT FOR POWER & DATA
- (1) 1" CONDUIT FOR MONITORING
- (1) 1" CONDUIT FOR INTERCOM

(4) PROVIDE (1) 3/4" PVC-COATED RGS UNDERGROUND CONDUITS FOR CANOPY LIGHTING AND SIGNS. ALL CONDUIT TO STUB-UP SHALL BE RGS WITH SEAL OFFS AND MEET THE REQUIREMENTS SPECIFIED IN ARTICLE 514 OF THE NEC. FIELD VERIFY EXACT LOCATIONS. EXTEND CONDUIT BACK TO LIGHTING CONTACTOR AND ASTRONOMIC TIME CLOCK. USE #10 CONDUCTORS FOR CANOPY LIGHTING AND SIGNS CIRCUITS.

FUEL CANOPY LUMINAIRE SCHEDULE

CALLOUT	SYMBOL	LAMP	DESCRIPTION	BALLAST	MOUNTING	MODEL	INPUT VA	TOTAL VA	TOTAL LUMENS	VOLTS	NOTES	QUANTITY
S3	▣	(1) 102W LED	LED SURFACE MOUNT CANOPY FIXTURE; 5000K	ELECTRONIC	SURFACE	LSI SCV-LED-15L-SC-50	102	102	14963	120V 1P 2W	FUEL CANOPY, DIMMED 80%	18

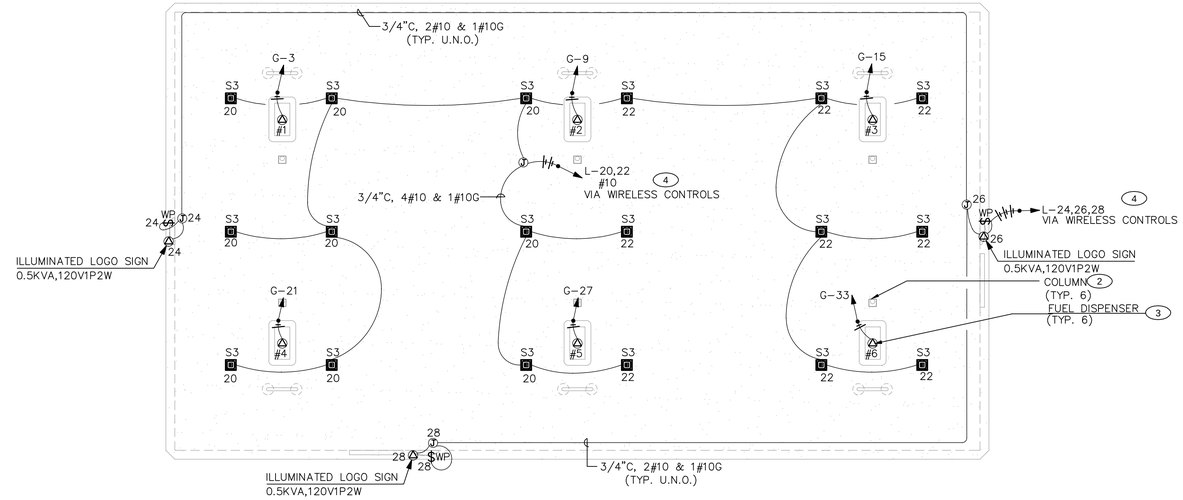

1 CANOPY ELECTRICAL PLAN

SCALE: 1/8" = 1'-0"

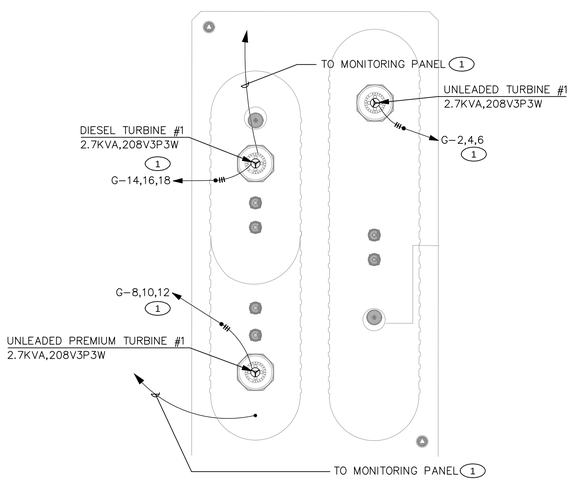

2 FUEL TANKS ELECTRICAL PLAN

SCALE: 1/8" = 1'-0"

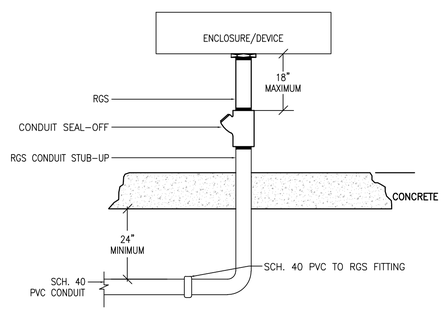

3 TYPICAL RGS STUB-UP WITH SEAL OFF

SCALE: NTS

ABOSSEIN #223054

Abossein Engineering, L.L.C.
MECHANICAL - ELECTRICAL
CIVIL - LEED
FIRE PROTECTION
18465 NE 68TH ST
REDMOND, WA 98052
PH: (425) 462-9441
FAX: (425) 462-9451
E-Mail: cservice@abossein.com
www.abossein.com

CLIENT: bp ARCO BP WEST COAST PRODUCTS, LLC

Barghausen Consulting Engineers, Inc.
18215 72nd Avenue South
Kent, WA 98032
425.251.6222
barghausen.com

NO.	DATE	REVISION DESCRIPTION
1		
2		
3		
4		
5		
6		
7		
8		
9		
10		
11		
12		

SEAL: ALEXANDER ABOSSEIN, STATE OF WASHINGTON, 21891, REGISTERED PROFESSIONAL ENGINEER

DEVELOPMENT INFORMATION:
ARCO NTI
3400 am/pm
FUEL CANOPY w/ 6 MPD's

SITE ADDRESS:
SWC S MERIDIAN
@ HIGHWAY 512
PUYALLUP, WASHINGTON
FACILITY #7184

DESIGNED BY:	ALLIANCE ZADM:
CHECKED BY:	BP REPM:
DRAWN BY:	ALLIANCE PM:
VERSION: - -	PROJECT NO: 21730

DRAWING TITLE:
ELECTRICAL SITE DETAILS

SHEET NO:
ES1.1

ARCO

FUELING CANOPY W/6 MPDs

SWC S MERIDIAN

@ HIGHWAY 512
PUYALLUP, WASHINGTON

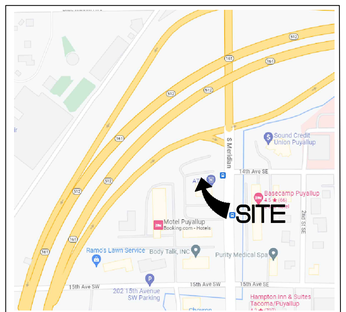

VICINITY MAP

DRAWING INDEX

G.0.0	TITLE SHEET AND DRAWING INDEX
G.0.2.0	UNDERGROUND TANK AND PIPING SITE PLAN AND INSTALLATION NOTES
G.0.2.1	TANK & PIPING SCOPE OF WORK & GENERAL NOTES (FRP 1 OF 2)
G.0.2.2	TANK & PIPING SCOPE OF WORK & GENERAL NOTES (FRP 2 OF 2)
G.0.5	DESIGN INTENT MISCELLANEOUS DETAILS
G.0.6.1	DESIGN INTENT: NEW VENT STACK INSTALLATION DETAILS
G.0.7.1	TANK FILL & VAPOR RISER STATIC GROUNDING DETAILS (STANDARD)
M.5.1.01	TANK AND PIPING MATERIALS LIST (1 OF 2)
M.5.1.02	TANK AND PIPING MATERIALS LIST (2 OF 2)
M.5.1.04	TYPICAL 10' DIA. 25,000 GALLON DOUBLE WALL FIBERGLASS TANK INSTALLATION DETAILS
M.5.1.15	TYPICAL 10' DIA. 12,000/10,000 GALLON DOUBLE WALL FIBERGLASS TANK INSTALLATION DETAILS
M.5.1.28	UST INSTALLATION (2) 10' DIA. 25K/22K BLENDING
M.5.1.30	SINGLE UST GASOLINE TANK SUMP FITTING DETAILS
M.5.1.33	DIESEL TANK SUMP & FITTING INSTALLATION DETAILS (STANDARD OPW)
M.5.1.34	FILL\VAPOR II INSTALLATION DETAILS (STANDARD OPW)
M.5.1.38	DISPENSER DETAILS: WAYNE OVATION (3+0) BLENDING DISPENSER INSTALLATION DETAILS ON ISLANDS
M.5.1.40	DISPENSER DETAILS: WAYNE OVATION (3+1) BLENDING DISPENSER INSTALLATION DETAILS ON ISLANDS
M.5.1.41	TANK SLAB CONCRETE SPECIFICATIONS & IDENTIFICATION MARKING DETAILS
M.5.1.42	ELECTRICAL FUELING SITE PLAN & CLASS 1, DIVISION 1 AND 2 HAZARDOUS AREA PLAN
M.5.1.43	FUEL SYSTEM ELECTRICAL CONDUIT POINT TO POINT PLAN
M.5.1.44	WAYNE DISPENSER SCHEMATICS LEAK DETECTION AND CAT 5 NOTES
M.5.1.45	VEEDER ROOT 450 AND FE PETRO INTERFACE FIELD WIRING DIAGRAM (SINGLE MASTER)
M.5.1.47	ELECTRICAL UNITIZED FUELING MANAGER CABINET ELEVATIONS AND DETAILS
M.5.1.48	ELECTRICAL PANEL E-STOP CONTROL WIRING SCHEMATIC AND TYPICAL FUELING ELEVATION
M.5.1.49	ELECTRICAL LOW VOLTAGE DISCONNECT FOR DATA/INTERCOM/MEDIA WIRING DIAGRAMS
M.5.1.50	EMERGENCY SHUTDOWN SCHEMATIC FUELING CONTROLS W/VFC's

CLIENT:

bp

ARCO

BP WEST COAST PRODUCTS, LLC

Barghausen Consulting Engineers, Inc.

18215 72nd Avenue South
Kent, WA 98032
425.251.6222
barghausen.com

NO.	DATE	REVISION DESCRIPTION
1	10/04/23	PERMIT RELEASE
2		
3		
4		
5		
6		
7		
8		
9		
10		
11		
12		

SEAL:

HAL P. GRUBB
STATE OF WASHINGTON
23975
REGISTERED
PROFESSIONAL ENGINEER
10/4/2023

DEVELOPMENT INFORMATION:

ARCO NTI

3400 am/pm
FUEL CANOPY w/ 6 MPD's

SITE ADDRESS:

SWC S MERIDIAN

@ HIGHWAY 512
PUYALLUP, WASHINGTON

FACILITY #TBD

DESIGNED BY:	NP/RF	ALLIANCE Z&DM:	
CHECKED BY:	OV	BP REPM:	
DRAWN BY:	NP/RF	ALLIANCE PM:	
VERSION:	V-15.0 01/01/2023	PROJECT NO:	21730

DRAWING TITLE:

TITLE SHEET & DRAWING INDEX

SHEET NO:

G.0.0

P:\21000s\21730\mechanical\Dwgs\21730 G.0.0.dwg 10/2/2023 4:15 PM NPHAN

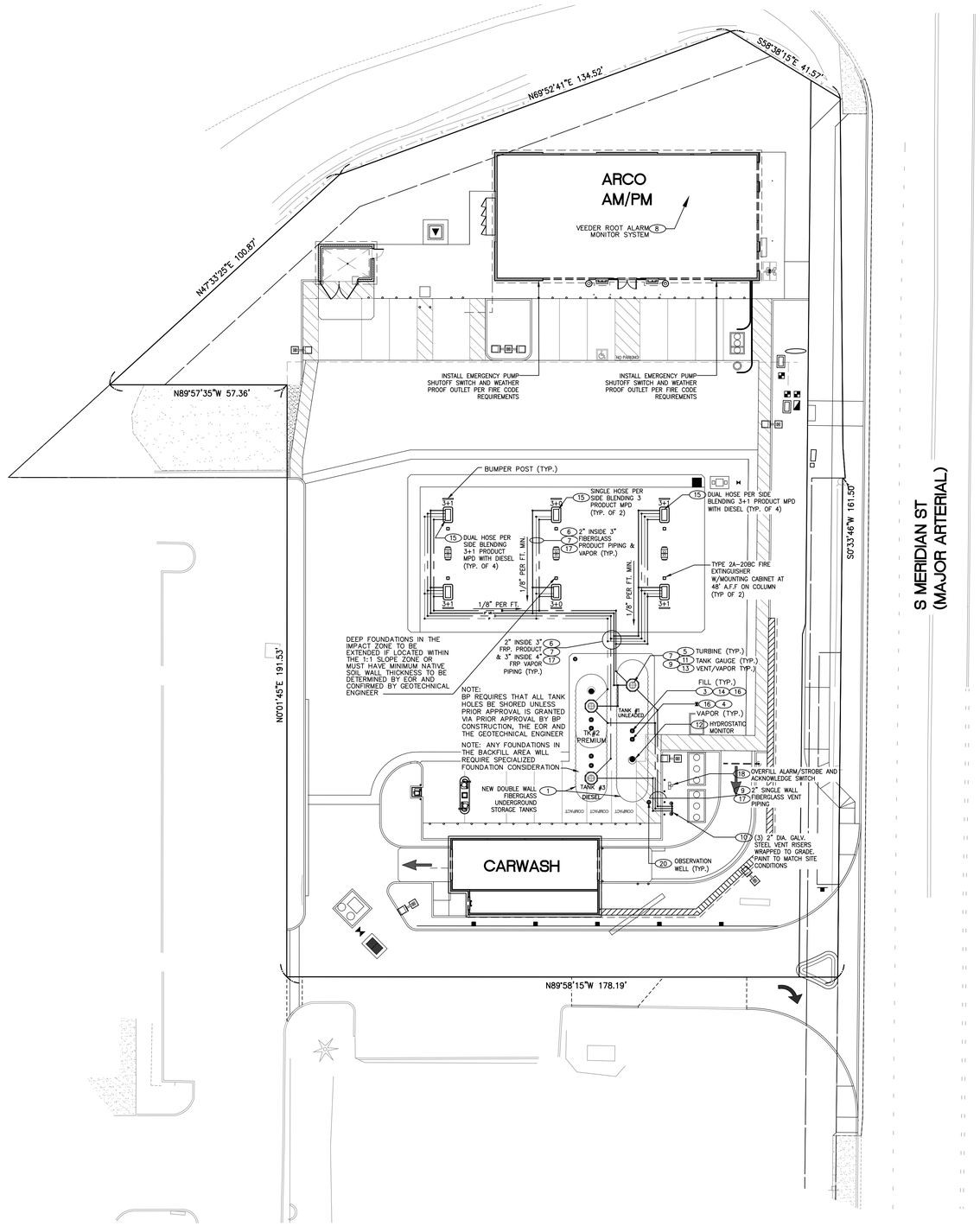

PIPING LEGEND

- FIBERGLASS PRODUCT PIPING
- FIBERGLASS VAPOR RECOVERY PIPING
- FIBERGLASS VENT PIPING

NOTE:
CONTRACTOR ASSUMES RESPONSIBILITY TO ASSURE THAT THE OPERABLE SYSTEM MEETS THE DESIGN INTENT AND THE CONTRACTOR IS PERMITTED TO ADJUST PIPING LOCATIONS BASED ON ACTUAL FIELD CONDITIONS AND INSTALLATION TECHNIQUES.

* PRODUCT, VAPOR AND VENT PIPING IS TO SLOPE TOWARD TANK 1/8" PER FOOT MINIMUM, 1/4" PER FOOT PREFERRED. IF INSTALLED, SIPHON PIPING TO SLOPE 1/4" PER FOOT.
* SECONDARY CONTAINMENT PIPING IS SHOWN BY NOTE ONLY, NOT GRAPHICALLY. ALL PRODUCT PIPING TO BE DOUBLE CONTAINMENT PIPE. VENT AND VAPOR RECOVERY SHALL BE SINGLE WALL

GENERAL NOTES

1. INSTALL (1) 25K REGULAR UNLEADED, ONE (1) 12K/10K PREMIUM UNLEADED/DIESEL DUAL COMPARTMENT "CONTAINMENT SOLUTIONS" DOUBLE WALL FIBERGLASS TANKS WITH CONTINUOUS MONITORING OF HYDROSTATIC ANNULAR SPACES BY "VEEDER ROOT" TLS-450 PLUS TANK AND PIPING MONITOR AND ALARM SYSTEM. ALL TANK SUMPS SHALL BE INDIVIDUALLY CONTINUOUSLY MONITORED BY "VEEDER ROOT" LIQUID SENSORS TIED INTO THE TLS-450 PLUS TANK & PIPING MONITOR SYSTEM. TANKS TO BE SET MIN. 60" BELOW FINISH GRADE. TANK INSTALLATION SHALL BE IN ACCORDANCE WITH MANUFACTURER'S INSTALLATION INSTRUCTIONS.
2. INSTALL A CONCRETE SLAB OVER TANKS. SURFACE WATER SHALL BE DIVERTED AWAY FROM EACH MANHOLE BY FORMING A CONCRETE CROWN WITH A 1-1/2" DROP IN 18" FROM THE EDGE OF THE MANHOLE RING TO THE SURROUNDING SLAB ELEVATION. CONSTRUCT SLAB PER CIVIL SLAB INSTALLATION DETAILS AND SPECIAL REQUIREMENTS SHOWN ON DETAILS.
3. INSTALL DIRECT BURY FILL SPILL BUCKET 5 GALLON WITH ADAPTERS AND CAPS.
4. INSTALL DIRECT BURY VAPOR SPILL BUCKET 5 GALLON WITH ADAPTERS AND CAPS.
5. INSTALL ONE (1) 2HP VARIABLE SPEED TURBINES IN UNLEADED TANK, ONE (1) 2HP IN PREMIUM TANK & ONE (1) 2HP IN DIESEL TANK. TURBINE SYSTEMS TO BE EQUIPPED WITH 3 GPH ELECTRONIC LINE LEAK DETECTION. LEAK DETECTORS ARE TO BE TESTED FOR THE 3 GPH LEAK DETECTION PRIOR TO START UP. CONTRACTOR TO PROVIDE TEST DATA AT THE TIME OF PUNCH LIST AS WELL AS INCLUDE IN CLOSE OUT BINDER. SET TURBINE INTAKES AT 5" FROM BOTTOM OF TANKS. TURBINES TO BE EQUIPPED WITH INTAKE FILTER SCREENS. CONTRACTOR IS TO LABEL TURBINES AND CONTROLLERS AS TO WHICH PRODUCT THEY SERVE. GREEN CONTROLLER LIGHTS ARE TO GO OUT WHEN TURBINES ARE OFF OR LOSE POWER.
6. INSTALL 2" INSIDE 3" DOUBLE WALL FIBERGLAS PRODUCT SUPPLY LINES TO DISPENSERS. PIPING SHALL BE INSTALLED PER MANUFACTURER'S SPECIFICATIONS AND INSTRUCTIONS. PIPING SHALL BE INSTALLED WITH A MINIMUM SLOPE OF 1/8" PER FOOT FROM THE FURTHEST DISPENSER SUMP DOWN TO THE TURBINE SUMPS. CONTRACTOR TO INSTALL TRACER TAPE WITH PRODUCT PIPING. TESTING OF PRODUCT LINES SHALL BE PERFORMED PRIOR TO BACKFILL, PRIOR TO PAVING AND BEFORE STATION OPERATION.
7. INSTALL 3" FIBERGLASS STAGE II VAPOR RECOVERY HEADER FOR VAPOR RECOVERY SYSTEM. SLOPE 1/8" PER FOOT MINIMUM TO TANKS. INSTALL 3" TO 2" REDUCING TEES WHERE HEADERS BRANCH TO DISPENSERS. CONTRACTOR TO INSTALL TRACER TAPE WITH VAPOR PIPING. TESTING OF VAPOR LINES SHALL BE PERFORMED PRIOR TO BACKFILL, PRIOR TO PAVING AND BEFORE STATION OPERATION. SECONDARY CONTAINMENT TO BE INSTALLED WHEN REQUIRED BY LOCAL JURISDICTION ONLY. SEE DETAILS AND SCOPE OF WORK ON SHEETS G.0.2.1 & G.0.2.2 FOR PIPE SIZING AT UNDERGROUND STORAGE TANKS.
8. INSTALL "VEEDER ROOT" TANK AND LINE ALARM CONTROL PANEL MODEL # TLS-450PLUS IN BUILDING AT NORMALLY OCCUPIED LOCATION IN BUILDING. SEE ARCHITECTURAL AND ELECTRICAL DRAWINGS FOR EXACT LOCATION.
9. INSTALL A SINGLE 2" FRP VENT LINE FOR EACH UNDERGROUND STORAGE TANK. SLOPE 1/4" PER FOOT (1/8" PER FOOT MINIMUM) TO TANKS AS SHOWN. CONTRACTOR TO INSTALL TRACER TAPE WITH VENT PIPING.
10. TERMINATION POINT OF TANK VENTS TO BE A MINIMUM OF 12' ABOVE GRADE AND NOT WITHIN 5' FROM ANY BUILDING OPENING OR PROPERTY LINE THAT CAN BE BUILT UPON. VENT RISERS SHALL BE INSTALLED IN ACCORDANCE WITH UNIFORM FIRE CODE REQUIREMENTS. VERIFY LOCAL REGULATIONS FOR ADDITIONAL EQUIPMENT OR INSTALLATION REQUIREMENTS.
11. INSTALL A SINGLE 1" RIGID GALVANIZED CONDUIT FOR EACH NEWLY INSTALLED TURBINE PUMP.
12. INSTALL DUAL FLOAT TANK ANNULAR SPACE HYDROSTATIC MONITORING SENSORS. SEE DETAILS FOR CONDUIT LOOPING BETWEEN ANNULAR RISER AND SUMPS.
13. INSTALL .1 GPH MAG PROBE TANK LEVEL GAUGES AT TURBINE SUMP AS SHOWN.
14. TANKS SHALL BE PROPERLY MARKED AND TAGGED WITH STANDARD API IDENTIFICATION MARKINGS AT FILL MANHOLES.
15. INSTALL (4) FOUR WAYNE OVATION SERIES 3+1 & (2) TWO 3+0 DISPENSERS TO BE FITTED WITH STAGE II HOSES, NOZZLES AND BREAKAWAY VALVES PER LOCAL REQUIREMENTS. CONTRACTOR IS RESPONSIBLE FOR INSTALLING HOSES, NOZZLES AND BREAKAWAY'S. INSTALL UNDER DISPENSER CONTAINMENT INCLUDING PRODUCT SHEAR VALVES AND MONITORING SENSORS. START UP BY MANUFACTURER REPRESENTATIVE. GENERAL CONTRACTOR TO PURGE LINES WITH A MINIMUM OF 200 GALLONS THROUGH EACH HOSE/NOZZLE. ANY AIR POCKETS OR START UP PROBLEMS DUE TO IMPROPER INSTALLATION OR INCORRECT WIRING THAT DESTROYS ELECTRONICS WILL BE BILLED BACK TO THE CONTRACTOR. AFTER PURGING THE PRODUCT LINES OF AIR AND BEFORE VAPOR RECOVERY TESTING, CONTRACTOR IS TO REPLACE THE FACTORY INSTALLED GASOLINE FILTERS WITH NEW FILTERS.
16. FILL AND STAGE I VAPOR RECOVERY RISERS & ANNULAR RISER SHALL BE GROUNDED TO PREVENT STATIC DISCHARGE DURING FILLING OPERATIONS. SEE DWG. G.0.7.1 FOR STANDARD DETAILS
17. ALL NEW PIPING AND TANKS TO BE INSTALLED PER MANUFACTURERS RECOMMENDATIONS AND INSTALLATION INSTRUCTIONS.
18. INSTALL OVERFILL ALARM & ACKNOWLEDGMENT SWITCH, AND ESO IN LOCATION SHOWN. ALARM AND SWITCH TO BE LOCATED TO PROVIDE AN UNOBSTRUCTED VIEW TO TRUCK DRIVER. PROVIDE BOLLARD PROTECTION OF FREE STANDING POLE. SEE WIRING DIAGRAM AND DETAIL FOR MOUNTING REQUIREMENTS.
19. FINAL FACILITY EQUIPMENT LOCATIONS TO BE APPROVED BY DISTRIBUTION TERMINAL MANAGER PRIOR TO SUBMITTAL FOR PERMITS TO ENSURE CLEAR AND SAFE ACCESS TO THE UNDERGROUND TANKS FOR UNLOADING OPERATIONS.
20. INSTALL (2) TWO OBSERVATION WELL

GENERAL COMPLIANCE NOTES

1. ARCHITECTURAL AND CIVIL DRAWINGS SHALL TAKE PRECEDENCE FOR REFERENCING ALL DIMENSIONS, PROPERTY LINES, ELEVATIONS AND EQUIPMENT LOCATIONS
2. ALL DIMENSIONS AND CONDITIONS SHALL BE CHECKED AND VERIFIED IN THE FIELD BEFORE STARTING ANY WORK. ANY DISCREPANCY SHALL BE CALLED TO THE ATTENTION OF THE OWNERS ENGINEER FOR HIS DECISION BEFORE PROCEEDING WITH THE WORK.
3. GENERAL CONTRACTOR SHALL OBTAIN NECESSARY PERMIT FROM APPLICABLE AGENCIES FOR EXCAVATIONS OF TRENCHES 5'-0" OR MORE IN DEPTH INTO WHICH A PERSON IS REQUIRED TO DESCEND.
4. AN UNAUTHORIZED RELEASE RESPONSE PLAN MUST BE SUBMITTED AND APPROVED BY GOVERNING AGENCY PRIOR TO TANK OPERATIONS.
5. ALL MATERIALS SHALL BE COMPATIBLE WITH USE FOR THE INTENDED PURPOSE AS PER NATIONALLY RECOGNIZED CODES, LOCAL CODES AND GOVERNING AUTHORITIES.
6. THE UNDERGROUND STORAGE TANK SYSTEM SHALL BE COMPATIBLE WITH THE PRODUCT STORED.
7. ALL MONITORING DEVICES SHALL BE INSTALLED PER MANUFACTURER'S SPECIFICATIONS.
8. GENERAL CONTRACTOR IS REQUIRED TO PROVIDE 72 HOUR (TYPICAL) NOTIFICATION TO GOVERNING AGENCY PRIOR TO TANK INSTALLATION.
9. TANK AND PIPING SYSTEM TO BE INSPECTED BY OWNER'S THIRD PARTY INSPECTOR & GOVERNING AGENCY AT FOUR (4) SEPARATE CONSTRUCTION PHASES (SEE SPECIFICATIONS):
   A. TANK AIR TEST BEFORE SETTING IN HOLE AND SOAP TEST.
   B. TANKS AND PRIMARY PIPING HYDROSTATICALLY OR PNEUMATICALLY TESTED FOR 30 MINUTES.
   C. INSPECTION OF ALL SECONDARY CONTAINMENT, INCLUDING TESTING, IN ACCORDANCE WITH MANUFACTURER'S GUIDELINES.
   D. FINAL INSPECTION INCLUDING ALL PORTIONS OF THE LEAK DETECTION SYSTEM.
10. ALL TANK SUMPS AND UNDER DISPENSER CONTAINMENT SUMPS SHALL BE HYDROSTATICALLY TESTED (LAKE TEST) WITH STANDING WATER TO TOP OF REDUCING COLLAR FOR A PERIOD OF 24 HOURS TO INSURE THAT THE SUMPS ARE WATERTIGHT. RECORD THE TEST RESULTS AND SUBMIT TO OWNER.
11. TANK SYSTEM, LEAK DETECTORS AND MONITORING SYSTEM INTEGRITY TESTS FORWARDED AND APPROVED BY GOVERNING AGENCY PRIOR TO TANK SYSTEM BEING PLACED IN OPERATION.
12. PRIOR TO FUEL BEING PUMPED, STATION MUST HAVE VEEDER ROOT FUNCTIONAL AND MONITORING ANNULAR SPACES OF TANK AND DISPENSER SUMPS.
13. PAYMENT OF ALL APPLICABLE UST OPERATING FEES SHALL BE SUBMITTED TO THE GOVERNING JURISDICTION WITHIN 30 DAYS OF THE FINAL INSPECTION.
14. EVIDENCE OF FINANCIAL RESPONSIBILITY SHALL BE SUBMITTED TO GOVERNING AGENCY (BY BP).
15. MEASUREMENTS OF BRINE LEVELS IN TANKS SHALL BE TAKEN BY BP REPRESENTATIVE DURING THREE SEPARATE VISITS TO SITE AND PRIOR TO FUELING OPERATIONS. REFER TO TANK MANUFACTURER'S INSTALLATION INSTRUCTIONS FOR REQUIREMENTS.

UTILITY CONFLICT NOTE:

CAUTION:
THE CONTRACTOR SHALL BE RESPONSIBLE FOR VERIFYING THE LOCATION, DIMENSION, AND DEPTH OF ALL EXISTING UTILITIES WHETHER SHOWN ON THESE PLANS OR NOT BY POT HOLING THE UTILITIES AND SURVEYING THE HORIZONTAL AND VERTICAL LOCATION PRIOR TO CONSTRUCTION. THIS SHALL INCLUDE CALLING UTILITY LOCATE ☎ 1 (800) 227-2600 AND THEN POT HOLING ALL OF THE EXISTING UTILITIES AT LOCATIONS OF NEW UTILITY CROSSINGS TO PHYSICALLY VERIFY WHETHER OR NOT CONFLICTS EXIST. LOCATIONS OF SAID UTILITIES AS SHOWN ON THESE PLANS ARE BASED UPON THE UNVERIFIED PUBLIC INFORMATION AND ARE SUBJECT TO VARIATION. IF CONFLICTS SHOULD OCCUR, THE CONTRACTOR SHALL CONSULT THE OWNER'S CIVIL ENGINEER TO RESOLVE ALL PROBLEMS PRIOR TO PROCEEDING WITH CONSTRUCTION.

CAUTION:
POTENTIAL UTILITY CONFLICT. CONTRACTOR SHALL FIELD VERIFY ALL EXISTING AND NEW UTILITIES PRIOR TO CONSTRUCTION. SEE UTILITY CONFLICT NOTE THE EXISTING WATER, STORM, AND SANITARY SEWER SERVICE SHOWN IS APPROXIMATE, BASED ON FIELD SURVEYS AND "AS-BUILT" RECORDS. THE GENERAL CONTRACTOR SHALL "POTHOLE" THE EXISTING UTILITIES TO VERIFY THE DIAMETER AND LOCATION (INCL. ELEVATIONS) PRIOR TO CONSTRUCTION. ANY DISCREPANCIES IN THE LOCATION OF THE EXISTING PIPE OR INCOMPATIBILITY OF THE DESIGN SHALL BE BROUGHT TO THE IMMEDIATE ATTENTION OF THE OWNERS REPRESENTATIVE, AND OWNERS CIVIL ENGINEER.

TANK EXCAVATION NOTE:

TANK EXCAVATIONS SHALL BE PER OSHA REQUIREMENTS AND BE PERFORMED FOLLOWING THE RECOMMENDATIONS OF THE SOILS REPORT. TANKS EXCAVATIONS THAT REQUIRE SHORING SHALL BE ENGINEERED AND PERMITTED SEPARATELY AND SHALL BE THE RESPONSIBILITY OF THE INSTALLING CONTRACTOR. HIGH WATER TABLE IS ANTICIPATED. CONTRACTOR TO SHORE AND DEWATER TANK HOLE EXCAVATION. FOLLOW TANK MANUFACTURER'S INSTALLATION INSTRUCTIONS FOR WET HOLE TANK INSTALLATION.

DEWATERING NOTE

THE GENERAL CONTRACTOR SHALL REVIEW PLANS, NOTES, AND GEOTECHNICAL ENGINEER RECOMMENDATIONS FOR IF DEWATERING MEASURES REQUIRED FOR EXCAVATIONS. COSTS FOR PROVIDING AND IMPLEMENTING THESE MEASURES ON THIS PROJECT SHALL BE SPECIFICALLY INCLUDED IN THE CONTRACTOR'S BID PROPOSALS.

GEOTECHNICAL ENGINEER:

KRAZAN & ASSOCIATES, INC.
825 CENTER STREET, STE A
TACOMA, WASHINGTON 98409
PHONE: (253) 939-2500
CONTACT: THERESA R. NUNAN

GROUND WATER LEVEL NOTE:

A SOILS REPORT OF THIS SITE LOCATION HAS REVEALED THAT GROUNDWATER WAS ENCOUNTERED BETWEEN 1.2 AND 3.7 FEET BELOW THE GROUND SURFACE WITH A MAXIMUM EXPLORED DEPTH OF 7.1 FEET. TANKS SHALL BE INSTALLED WITH CONCRETE DEADMEN AND FILTER FABRIC PER MANUFACTURERS' GUIDELINES.

0 10' 20' 40'
SCALE: 1"=20'

DIGALERT
Call Toll Free
1 (800) 227-2600
TWO WORKING DAYS BEFORE YOU DIG

CLIENT:

bp

ARCO
BP WEST COAST PRODUCTS, LLC

Barghausen Consulting Engineers, Inc.
18215 72nd Avenue South
Kent, WA 98032
425.251.6222
barghausen.com

NO.	DATE	REVISION DESCRIPTION
1	10/04/23	PERMIT RELEASE
2		
3		
4		
5		
6		
7		
8		
9		
10		
11		
12		

SEAL:

HAL P. GRUBB
STATE OF WASHINGTON
23975
REGISTERED PROFESSIONAL ENGINEER
10/4/2023

DEVELOPMENT INFORMATION:
ARCO NTI
3400 am/pm
FUEL CANOPY w/ 6 MPD's

SITE ADDRESS:
SWC S MERIDIAN
@ HIGHWAY 512
PUYALLUP, WASHINGTON

FACILITY #TBD

DESIGNED BY:	NP/RF	ALLIANCE Z&DM:	
CHECKED BY:	OV	BP REPM:	
DRAWN BY:	NP/RF	ALLIANCE PM:	
VERSION: V-15.0 01/01/2023		PROJECT NO:	21730

DRAWING TITLE:
UNDERGROUND TANK AND PIPING SITE PLAN AND INSTALLATION NOTES

SHEET NO:
G.0.2.0

P:\21000s\21730\mechanical\tanks\21730 G.0.2.0.dwg 10/3/2023 2:55 PM NPHAN

TANK AND PIPING INSTALLATION SCOPE OF WORK:

GENERAL:

SCOPE OF WORK: UNLESS SPECIFIED OTHERWISE ON THESE DRAWINGS, THE GENERAL CONTRACTOR SHALL FURNISH ALL WORK AND MATERIALS TO COMPLETE THE INSTALLATION OF THE SYSTEMS AND EQUIPMENT SHOWN IN THESE DRAWINGS AND AS REQUIRED BY PROJECT DOCUMENTS PROVIDED TO THE CONTRACTOR.

WHERE THESE DRAWINGS DIFFER FROM LOCAL REGULATIONS, LOCAL REGULATIONS WILL SUPERSEDE THESE DRAWINGS IF THEY ARE MORE STRINGENT.

NOTE:

THESE GUIDELINES APPLY ONLY TO UNDERGROUND STORAGE TANKS AND PRODUCT PIPING. REFER TO BALANCE OF SITE SPECIFIC DOCUMENTS/ DRAWINGS FOR SPECIFICATIONS REGARDING CONCRETE/ASPHALT INSTALLATION, ELECTRICAL REQUIREMENTS, AND SANITARY & STORM SEWERS INSTALLATION.

*** WHERE MULTIPLE VERSIONS OF THE SAME SHEET EXIST, INSERT ***
THE SHEET APPROPRIATE FOR THE SPECIFIC STATION LAYOUT.

ARCHITECTURAL AND CIVIL DRAWINGS SHALL TAKE PRECEDENCE FOR REFERENCING ALL DIMENSIONS, PROPERTY LINES, ELEVATIONS AND EQUIPMENT LOCATIONS

ALL DIMENSIONS AND CONDITIONS SHALL BE CHECKED AND VERIFIED IN THE FIELD BEFORE STARTING ANY WORK. ANY DISCREPANCY SHALL BE CALLED TO THE ATTENTION OF THE OWNERS ENGINEER FOR HIS DECISION BEFORE PROCEEDING WITH THE WORK.

ALL REQUESTS TO ADD, DELETE, OR SUBSTITUTE MATERIAL AND EQUIPMENT SHOWN ON THESE DRAWINGS MUST BE REVIEWED AND APPROVED BY THE OWNER'S REPRESENTATIVE OR HIS AGENT, THE BP PROJECT MANAGER, IN CHARGE OF THE PROJECT. ALL CHANGES MUST BE REVIEWED WITH THE MARKETING FUELS MANAGER.

THE CONTRACTOR IS REQUIRED TO FURNISH AS-BUILT DRAWINGS TO LOCATE TANKS AND PIPING AS INSTALLED AFTER THE COMPLETION OF THE PROJECT.

(1) TANK INSTALLATION:

STANDARD: CONTRACTOR TO INSTALL DOUBLE WALL FIBERGLASS TANKS WITH COMPLETE "VEEDER ROOT PANEL" TANK AND PIPING MONITORING AND ALARM SYSTEM. TANKS TO BE SET MIN. 60" BELOW FINISH GRADE. SEE SITE SPECIFIC INSTALLATION DETAILS FOR TANK SIZES AND LOCATIONS.

NYC VARIANT: INSTALL TOP AND BOTTOM SLAB AND SLAB PIER SUPPORT SYSTEM PER NYC STANDARDS.

TANK SIZING GUIDELINES:
SPECIFIC BUSINESS UNIT TANK SIZE REQUIREMENTS ARE RECOMMENDED. TANK SIZING MODELS CAN BE RUN BY CONTACTING FUEL SYSTEM DESIGN MANAGER – AMERICAS.

LOCATION OF TANKS AND ASSOCIATED EQUIPMENT ON PROPERTY: FINAL FACILITY EQUIPMENT LOCATIONS INCLUDING PLACEMENT AND ORIENTATION OF TANKS, EMERGENCY SHUTOFF SWITCHES, OVERFILL ALARMS (IF PRESENT) TO BE APPROVED BY BP DISTRIBUTION PRIOR TO SUBMITTAL FOR PERMITS TO ENSURE CLEAR AND SAFE ACCESS TO THE UNDERGROUND TANKS FOR UNLOADING OPERATIONS. THE GENERAL CONTRACTOR IS RESPONSIBLE FOR CONFIRMING APPROVED TANK AND EQUIPMENT LOCATIONS HAS BEEN DOCUMENTED W/ BP DISTRIBUTION, THE SITE ENGINEER AND/OR OWNER'S REPRESENTATIVE OR HIS AGENT, THE BP PROJECT MANAGER PRIOR TO THE COMMENCEMENT OF WORK.

"TANK EXCLUSION ZONE NOTE" THE UST STRUCTURAL EXCLUSION ZONE SHALL BE ESTABLISHED AS 16'-0" AS MEASURED FROM THE EXTERIOR FACE OF ANY UNDERGROUND STORAGE TANKS LOCATED WITHIN THE SITE PLAN. THE PURPOSE OF THIS ZONE IS TO ACT AS AN ENGINEERING BARRIER TO PREVENT THE RISK OF DAMAGE TO OUR UST'S FROM STRUCTURAL ELEMENTS THAT ARE TOO CLOSE TO THE EXCAVATION WALLS, RESULTING IN LATERAL INSTABILITY AND TRANSFER OF LOADS INTO THE TANK HOLE AND POTENTIALLY DAMAGING OUR TANKS

TANKS:
SHALL BE UNDERWRITERS LABORATORY APPROVED LISTED FOR THE UNDERGROUND STORAGE OF ALL FLAMMABLE AND COMBUSTIBLE MOTOR FUELS AS CALLED FOR ON THE SITE SPECIFIC DRAWING OR AS DESIGNATED ON THE SUPPLEMENTAL CONDITIONS AND SHALL BE DOUBLE WALL TANKS OF FIBERGLASS REINFORCED PLASTIC (FRP). INSTALLATION OF TANKS AND PIPING SHALL BE IN ACCORDANCE WITH U.L. LISTED MANUFACTURER'S INSTRUCTIONS. INSTALLATION SHALL CONFORM TO NFPA-30/30A AND ALL APPLICABLE LOCAL, STATE AND FEDERAL REGULATIONS. TANKS SHALL ONLY BE INSTALLED BY QUALIFIED INSTALLERS CERTIFIED BY THE STATE IN WHICH THE TANKS ARE TO BE INSTALLED AND BY THE TANK MANUFACTURER.

THE UNDERGROUND STORAGE TANK SYSTEM SHALL BE COMPATIBLE WITH THE PRODUCT STORED. ALL CONTINUOUS MONITORING DEVICES SHALL BE INSTALLED PER MANUFACTURER'S SPECIFICATIONS.

ALL MATERIALS USED IN THE INSTALLATION SHALL BE COMPATIBLE WITH USE FOR THE INTENDED PURPOSE AS PER NATIONALLY RECOGNIZED CODES, LOCAL CODES AND GOVERNING AUTHORITIES.

METHANOL COMPATIBILITY: FOR ALL METHANOL COMPATIBLE STORAGE SYSTEMS, ALL READILY ACCESSIBLE COMPONENTS SHALL BE METHANOL COMPATIBLE FOR THE IMMEDIATE INTENDED SERVICE.

BIO-DIESEL COMPATIBILITY: CURRENTLY AT THIS TIME, NO TANKS ARE LISTED FOR BIO-DIESEL SERVICE APPLICATIONS.

INITIAL TANK TESTING:
NEW TANKS SHALL BE INSPECTED UPON ARRIVAL AT SITE, AFTER UNLOADING FROM THE TRUCK, FOR VISUAL DAMAGE PRIOR TO INSTALLATION.
- FOR DRY ANNULAR SPACE TANKS AIR/SOAP TESTS MUST BE PERFORMED AT THE JOB SITE PRIOR TO INSTALLATION TO VERIFY THE ABSENCE OF DAMAGE.
- FOR LIQUID FILLED ANNULAR SPACE TANKS – AIR/SOAP TESTS ON ACCESSORIES AND FITTINGS CAN BE PERFORMED AFTER THE TANK IS IN THE EXCAVATION BEFORE OR AFTER BACKFILLING.

CONTRACTOR SHALL COMPLETE ALL TESTING ACCORDING TO MANUFACTURER'S INSTRUCTIONS FOR THE TANKS. CONTRACTOR SHALL COMPLETE ALL WARRANTY VALIDATION TESTING AND PROVIDE DOCUMENTATION TO OWNER'S REPRESENTATIVE OR HIS AGENT, THE BP PROJECT MANAGER.

HYDROSTATICALLY MONITORED DOUBLE WALL TANKS SHALL BE TESTED ACCORDING TO MANUFACTURER'S INSTRUCTIONS BY:
- INSPECT AND ADJUST RESERVOIR LEVEL OF THE MONITORING FLUID (TO COVER THE RIBE INSIDE THE RESERVOIR.
- REMOVE ENOUGH TANK FITTING PLUGS TO SEE INSIDE THE PRIMARY TANK. VISUALLY INSPECT THE TANK INTERIOR FOR COLORED MONITORING FLUID TRACES.
- CONNECT TANK TEST MANIFOLD AND PRESSURIZE THE PRIMARY TANK TO 5 PSIG MAX. (3 PSIG MAX. FOR 12' TANKS). MONITOR THE PRESSURE FOR 30 MINUTES FOR ANY LOSS IN PRESSURE THAT MAY INDICATE A LEAK.
- DO NOT PRESSURIZE THE ANNULAR SPACE. DOING SO MAY DAMAGE THE PRIMARY TANK OR CAUSE TANK FAILURE.
- WHILE UNDER PRESSURE, COVER FITTINGS AND MANWAY(S) WITH SOAP SOLUTION AND INSPECT.
- AFTER COMPLETING AIR TEST, RELEASE PRESSURE; REMOVE ALL GAUGES, VALVES, AND HOSE ASSEMBLIES; REPLACE AND TIGHTEN FITTING PLUGS; AND REPLACE THE PLASTIC VENT PLUG IN THE OPEN FITTINGS.

NOTE HYDROSTATIC FLUID RESERVOIR LEVEL MUST BE RECHECKED TO VERIFY TANK INTEGRITY PRIOR TO INTRODUCING BALLAST INTO TANKS.

FIELD REPAIR OF TANKS: IT IS ALLOWABLE TO FIELD REPAIR DAMAGED TANKS AFTER APPROVAL BY BP FILED ENGINEER. ALL TANKS DAMAGED IN TRANSPORT OR OFF LOADING OPERATIONS SHALL BE FIELD REPAIRED BY A TANK MANUFACTURER'S CERTIFIED FIELD SERVICE REPRESENTATIVE. TANK MANUFACTURER SHALL RE-CERTIFY REPAIRED TANKS FOR USE. ALL FIELD SERVICE WORK SHALL BE DOCUMENTED. COPIES OF ANY AND ALL FIELD SERVICE DOCUMENTATION SHALL BE PLACED IN THE PROJECT FILE AND INTO OWNERS OPERATING FILE.

TANK MEASUREMENTS:
THE GENERAL CONTRACTOR IS RESPONSIBLE FOR THE COMPLETION OF THE FOLLOWING TANK MEASUREMENT ACTIVITIES:
1. VERIFY THE EXTERNAL SIZE OF THE TANK TO MATCH WITH MANUFACTURER SUPPLIED SHOP MEASUREMENTS.
TRANSFER THE SIZE, SERIAL NUMBER, AND PRODUCT INSTALLED, AND POSITION OF TANK TO THE AS-BUILT PLAN.
2. TRANSFER TANK DIMENSIONAL AND PRODUCT INFORMATION TO THE DATA SHEET IN THE TANK GAUGE CONSOLE.
3. PROVIDE THE TOP OF TANK ELEVATION READING AT BOTH ENDS OF EACH TANK.

TANK DEFLECTION MEASUREMENT PROCEDURE:

DEFLECTION MEASUREMENT BEFORE AND AFTER TANK INSTALLATION SHALL BE ACCORDING TO MANUFACTURER'S REQUIREMENTS AND SHALL BE WITHIN MANUFACTURER'S TOLERANCES. ALL INFORMATION SHALL BE COMPLETED AS PER THE MANUFACTURER'S WARRANTY DOCUMENTATION.

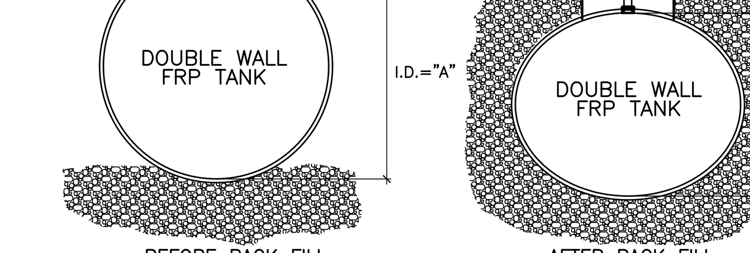

BEFORE BACK FILL   AFTER BACK FILL

TANK INSPECTION AND INSTALLATION – DEFLECTION MEASUREMENT

DIPSTICK PREPARATION
DRIVE A SMALL HEADED, NON-SPARKING (E.G. BRASS) NAIL HALFWAY INTO A WOODEN DIPSTICK, 1 INCH ABOVE ITS BASE.

FIRST DIAMETER READING (PRIOR TO BACK FILL)
1. PLACE THE DIPSTICK INTO A SERVICE FITTING.
2. MEASURE AND RECORD THE DISTANCE FROM THE TANK BOTTOM TO THE TOP OF THE FITTING.
3. PULL THE DIPSTICK UP UNTIL THE EXPOSED NAIL CATCHES ON THE INSIDE TOP OF TANK.
4. MEASURE THE DISTANCE FROM THE TANK TOP (INSIDE) TO THE TOP OF THE FITTING. SUBTRACT 1 INCH FROM THIS MEASUREMENT AND RECORD THE DISTANCE.
5. SUBTRACT THE SECOND DISTANCE FROM THE FIRST AND RECORD THIS VALUE AS READING "A" ON THE INSTALLATION CHECKLIST.

SECOND DIAMETER READING (AFTER BACKFILL)
1. PLACE THE DIPSTICK INTO A SERVICE FITTING WITH A STANDPIPE INSTALLED TO SUBGRADE.
2. MEASURE AND RECORD THE DISTANCE FROM THE TANK BOTTOM TO THE TOP OF THE STANDPIPE.
3. PULL THE DIPSTICK UP UNTIL THE EXPOSED NAIL CATCHES ON THE INSIDE TOP OF TANK.
4. MEASURE THE DISTANCE FROM THE TANK TOP (INSIDE) TO THE TOP OF THE STANDPIPE. SUBTRACT 1 INCH FROM THIS MEASUREMENT AND RECORD THE DISTANCE.
5. SUBTRACT THE SECOND DISTANCE FROM THE FIRST AND RECORD THIS VALUE AS READING "B" ON THE INSTALLATION CHECKLIST.

CALCULATION AND COMPARISON
1. SUBTRACT READING "B" FROM READING "A".
2. COMPARE THIS VALVE TO THE TABLE OF "MAXIMUM ALLOWABLE DEFLECTIONS" SHOWN ON THE "INSTALLATION CHECKLIST".
3. VERTICAL DEFLECTION IN EXCESS OF THESE VALUES INDICATES IMPROPER INSTALLATION AND VOIDS THE TANK WARRANTY.

MAXIMUM DEFLECTION FOR 8'-0" TANKS = 1-1/4"
MAXIMUM DEFLECTION FOR 10'-0" TANKS = 1-1/2"

TOP OF TANK ELEVATION:
CONTRACTOR TO CALCULATE TOP OF TANK ELEVATION. START WITH 18" MINIMUM DEPTH OF VAPOR RECOVERY LINE AT THE FARTHEST DISPENSER AND SLOPE 1/4" PER FOOT MAXIMUM TO 1/8" PER FOOT MINIMUM. ADD 12" AT THE TANK. ADD 13" (FOR 3" PIPE) OR 8" (FOR 2") FOR A CHANGE IN PIPING DIRECTION OTHER THAN 90 OR 45 DEGREES. SET TANKS 6" DEEPER THAN CALCULATED AS PRECAUTION. IN NO EVENT SHALL THE TANK BE BURIED LESS THAN 4'-0" BELOW FINISHED GRADE OR DEEPER THAN 7'-0" BELOW FINISHED GRADE. SEE MANUFACTURERS INSTALLATION INSTRUCTIONS FOR MINIMAL TANK BURY WHEN DEADMEN ANCHORING IS NOT PROVIDED. ANY VARIATIONS IN SLOPE FROM 1/4" PER FOOT SHALL BE REPORTED TO OWNER'S ENGINEER.

TANK EXCAVATION:
CONTRACTOR TO EXCAVATE TANK HOLE. CONTRACTOR SHALL ADHERE TO O.S.H.A. STANDARDS ON EXCAVATIONS. CONTRACTOR MAY SELECT ANY OF THE RECOMMENDED PRACTICES FOR TANK EXCAVATION AND MUST PROVIDE ALL NECESSARY PROTECTIVE BARRICADES.

SLOPE SIDES OF TANK HOLE (USE OF SLOPING MUST BE RECEIVE PRIOR APPROVAL ON INDIVIDUAL SITE BASIC FROM "BP") OR USE SHORING FOR ALL TANK EXCAVATIONS IN ACCORDANCE WITH OSHA 1926 SUBPART P, OSHA STANDARDS – EXCAVATIONS; FINAL RULE OCTOBER 1, 1989. WHEN ENGINEERED SHORING IS REQUIRED DUE TO SITE CONDITIONS AN ENGINEERED SHORING PLAN UTILIZING INTERLOCKING STEEL SHEET PILING SHALL BE PROVIDED AND SHALL INCLUDE SUPPORTING ENGINEERING CALCULATIONS BY A STATE CERTIFIED ENGINEER AND SHALL BE THE RESPONSIBILITY OF THE INSTALLING CONTRACTOR.

GENERAL CONTRACTOR SHALL OBTAIN NECESSARY PERMIT FROM APPLICABLE AGENCIES FOR EXCAVATIONS OF TRENCHES 5'-0" OR MORE IN DEPTH INTO WHICH A PERSON IS REQUIRED TO DESCEND.

TANK EXCAVATIONS SHALL BE THE MINIMUM SIZE REQUIRED TO PROVIDE FOR BEDDING AND CLEARANCES INDICATED IN THESE DRAWINGS. TANK BURIAL DEPTH FIELD DETERMINED TO PROVIDE FOR 1/4" (1/8" PER FOOT MIN.) PER FOOT FOR STAGE II VAPOR RECOVERY PIPING & 1/8" MINIMUM PER FOOT FOR PRODUCT PIPING SLOPE BACK FROM DISPENSERS TO TANK.

TANK STABILITY BUOYANCY CALCULATIONS:
TANK STABILITY SHALL BE RE-CHECKED AGAINST FLOATATION BY INSTALLING CONTRACTOR. SEE BUOYANCY CALCULATIONS ON TANK DETAILING SHEETS.

TANK ANCHORING:
CONTRACTOR TO INSTALL MANUFACTURER SUPPLIED TANK HOLD DOWN STRAPS & ANCHORS WHEN REQUIRED DUE TO HIGH WATER TABLE, LOCAL REGULATIONS, OR SPECIFIED BY SITE ENGINEER/DESIGNER AND/OR OWNER'S REPRESENTATIVE OR HIS AGENT, THE BP PROJECT MANAGER. WHEN REQUIRED, THE ANCHORING SYSTEM SHALL BE IN COMPLIANCE WITH AUTHORITY HAVING JURISDICTION. ANCHOR & STRAPS TO BE INSTALLED ACCORDING TO MANUFACTURER'S INSTRUCTIONS.

** ALTERNATE ANCHORING BY USE OF A CONCRETE ANCHORING SLAB IS PERMITTED. WHEN GROUNDWATER LEVEL IS ANTICIPATED TO BE WITHIN 5 FT. OF GRADE CONTRACTOR SHALL NOTIFY OWNER'S REPRESENTATIVE FOR DIRECTION ON ANCHORING METHOD TO BE USED (DEADMAN OR ANCHORING SLAB) AND SUCH SHALL BE INSTALLED ACCORDING TO MANUFACTURER'S RECOMMENDATION.

** THIS PROCEDURE IS REQUIRED IN NYC AND CONSIDERED PART OF SCOPE OF WORK WHEN INSTALLING TANKS IN NYC.

NYC VARIANT: IT IS THE CONTRACTORS RESPONSIBILITY TO PROVIDE FOR THE INSTALLATION OF A 12" CONCRETE ANCHORING SLAB. 4,000 PSI AT 28 DAYS WITH (2) LAYERS OF 6x6-w5.5xw5.5 ON 2" STEEL CHAIRS TOP & BOTTOM

FILTER FABRIC: IT IS THE CONTRACTORS RESPONSIBILITY TO PROVIDE FOR THE INSTALLATION OF FILTER FABRIC (DUPONT TYPAR OR MIRAFI 500X) WHICH IS REQUIRE FOR WET HOLE INSTALLATIONS OR UNSUITABLE SOILS. (NOTE: A WET HOLE/ UNSUITABLE AREA REQUIRING FILTER FABRIC IS ANY TANK EXCAVATION IN WHICH THE AREA IS SUBJECT TO: TIDAL INFLUENCES, OR AREAS SUBJECT TO FREQUENTLY CHANGING GROUND WATER LEVELS, OR WATER CONDITIONS WITH SILTY SOIL, OR MUCK, BOG, PEAT, SWAMP, LANDFILL TYPE AREAS OR ANY OTHER SITUATION WHERE THE SOIL IS INHERENTLY UNSTABLE, OR SOILS WITH LESS THAN 250 LBS./SQ. FT. COHESION, OR WITH ULTIMATE BEARING CAPACITY OF LESS THAN 500 LBS./SQ. FT., OR AT THE REQUEST OF THE TANK OWNER. ALL WET HOLE BALLAST INSTALLS (AS DESCRIBED IN SECTION BELOW) SHALL USE FILTER FABRIC.

FILTER FABRIC SHALL EXTEND 1 FOOT ABOVE MAX HIGH WATER TABLE AND SEAMS SHALL BE OVERLAPPED BY 1 FOOT. MATERIAL SHALL BE PINNED OR OTHERWISE SECURED ALLOW BACKFILL WITHOUT DISTURBANCE. USE OF PLASTIC, OR ANY OTHER MATERIAL THAT MAY TEAR, OR DEGRADE OVERTIME IS PROHIBITED.

WET HOLE BALLAST METHOD:
WATER IS THE SUITABLE MEDIUM FOR BALLAST DURING WET HOLE TANK INSTALLATIONS. A PROPERLY INSTALLED 12 FOOT HIGH TEMPORARY VENT PIPE MUST BE INSTALLED BY THE CONTRACTOR. IF WATER IS USED TO BALLAST TANKS, THE WATER IS TO BE COMPLETELY PUMPED OUT & MOPPED DRY IN ORDER TO PROTECT FUEL INTEGRITY. CONTRACTOR IS REQUIRED TO COORDINATE BALLASTING OPERATIONS WITH OWNER'S REPRESENTATIVE OR HIS AGENT, THE BP PROJECT MANAGER. IT IS THE INSTALLING CONTRACTOR'S RESPONSIBILITY TO DETERMINE THE JURISDICTIONAL REQUIREMENTS AND ACCEPTANCE FOR BALLASTING THE TANKS AND TO PROVIDE FOR PROPER DISPOSAL OF THE BALLASTING MEDIUM UNDER THE REGULATIONS OF THE GOVERNING AUTHORITY.

BACK FILL:
CONTRACTOR TO PROVIDE ALL BACK FILL REQUIRED FOR THE PROJECT SCOPE. PEA GRAVEL SHALL CONSIST OF NATURALLY ROUNDED AGGREGATE, MINIMUM 1/8" AND MAXIMUM 3/4" SIZE. FREE OF CLAY, SLAG, CINDERS, OR DEBRIS. ALL SUBSTITUTES MUST BE APPROVED BY MANUFACTURER AND OWNERS FIELD REPRESENTATIVE.

NO MORE THAN 5% (BY WEIGHT) MAY PASS THE #8 SIEVE FOR BACK FILLING NONMETALLIC TANKS WITH A 96% TO 98% FREE FALL COMPACTION. DRY PEA GRAVEL DENSITY MINIMUM OF 95 POUNDS PER CUBIC FOOT IS REQUIRED. SUPPLY QUARRY CERTIFICATION MEETING ASTM C-33, PARAGRAPH 9.1 REQUIREMENTS.

BACK FILLING OF TANK EXCAVATIONS SHALL BE PROVIDED IN LIFTS AS PER TANK MANUFACTURER'S INSTALLATION INSTRUCTIONS.

PRODUCT, VENT, AND VAPOR PIPING SHALL BE LAID AND CONTINUOUSLY SUPPORTED ON A 6" BED OF COMPACTED PEA GRAVEL. BLOCKS, PLANKS, OR OTHER DEBRIS SHALL NOT BE USED TO SUPPORT PIPING IN FINAL INSTALLATION.

NOTE: UNDER NO CIRCUMSTANCES SHALL DIRT, PAVING MATERIALS, WOOD, OR OTHER CONSTRUCTION DEBRIS BE ALLOWED TO REMAIN IN TANK AND PIPE EXCAVATIONS.

(2) ANNULAR SPACE HYDROSTATIC MONITOR AND RISER INSTALLATION:

STANDARD: CONTRACTOR TO INSTALL 4" FIBERGLASS RISER AND VEEDER ROOT HYDROSTATIC SENSOR AT TANK ANNULAR SPACE LOCATION NOTED ON THE PLANS PER MANUFACTURERS INSTRUCTIONS.

(3) TANK SUMP INSTALLATION:

STANDARD: CONTRACTOR TO INSTALL 42" OR 48" DIAMETER TURBINE SIDE FIBERGLASS POLYSIDED SUMPS ON TANKS PER MANUFACTURER'S INSTRUCTIONS. NOTE THAT THE ORIENTATION OF THE TANK SUMPS MUST BE CORRECT IN ORDER TO FACILITATE CORRECT PIPING INSTALLATION INTO THE SUMPS. SEE ACCOMPANYING DETAILS IN PLAN SET AND NOTE SIZES OF SUMPS PER PROJECT DEMOGRAPHICS.

NYC VARIANT: 42" DIAMETER TURBINE SUMPS ARE INSTALLED.

LONG ISLAND/NY VARIANT: ON TANKS INSTALLED IN LONG ISLAND, FILL SUMPS ARE REQUIRED. SEE ENCLOSED DRAWINGS FOR DETAILS

ARCO BRANDED VARIANT: 48" DIAMETER TURBINE SUMPS ARE INSTALLED.

CALIFORNIA VARIANT: 42" DIAMETER FILL SUMPS TO BE DOUBLE WALLED AND INSTALLED WITH CONTINUOUS HYDROSTATIC MONITORING DEVICE PER AB-2481 REQUIREMENTS.

(4) TANK LEVEL GAUGE / OVERFLOW PROTECTION:

STANDARD: CONTRACTOR TO INSTALL VEEDER ROOT MAGNOSTRICTIVE PROBE LEVEL GAUGE AT LOCATION NOTED ON PLANS PER MANUFACTURER'S INSTALLATION INSTRUCTIONS.

OVERFLOW PROTECTION: UST OVERFLOW COMPLIANCE IS ACHIEVED BY USE OF OVERFLOW PREVENTION DROP TUBE FLAPPER VALVE SET AT 95% AND IS IN ACCORDANCE WITH FEDERAL AND STATE GUIDELINES FOR UST OVERFILL REQUIREMENTS.

AN OVERFILL ALARM AND ACKNOWLEDGE SWITCH TIED INTO THE VEEDER ROOT AUTOMATIC TANK GAUGE SYSTEM. THE MONITORING SYSTEM PROVIDES AN AUDIBLE AND VISUAL ALARM WHEN THE TANK(S) ARE FILLED TO THE 90% LEVEL.

(5) FILL AND STAGE I VAPOR RECOVERY INSTALLATION:

STANDARD: CONTRACTOR TO INSTALL 4" GALVANIZED FILL AND STAGE I VAPOR RECOVERY RISERS. CONTRACTOR TO INSTALL DROP TUBE ASSEMBLY. WITH OVERFILL PREVENTION DROP TUBE. CONTRACTOR TO INSTALL VENT AND STAGE II FLEX CONNECTORS AND FRP ADAPTERS. LOCATE AND CUT PENETRATIONS INTO SUMPS FOR THE ROUTING OF VENT AND STAGE II VAPOR PIPING INTO TURBINE SUMPS AND MAKE CONNECTIONS TO VENT AND VAPOR PIPING FIBERGLASS PIPING. CONTRACTOR TO INSTALL DOUBLE SIDED PENETRATION ENTRY BOOTS FOR ALL ENTRIES INTO SUMPS. CONTRACTOR TO INSTALL STATIC GROUNDING SYSTEM AT ALL FILL AND VAPOR RISERS PER INSTALLATION DETAILS SHOWN ON SHEET G.0.7.

CONTRACTOR TO INSTALL CARB APPROVED STAGE I MANHOLES WITH 5 GALLON SPILL COLLECTION BUCKETS. INSTALL PRODUCT AND FILL ADAPTERS AND CAPS. SEE ACCOMPANYING DETAILS IN SITE SPECIFIC PLAN SET FOR MANUFACTURER AND INSTALLATION REQUIREMENTS.

NYC VARIANT: CONTRACTOR TO PROVIDE THE INSTALLATIONS OF A SEPARATE UNOBSTRUCTED VENT CONNECTION AT EACH TANK AT THE TURBINE SIDE OF THE TANK AS PER PLANS AND PER NYC CODE REQUIREMENTS. A 15 GALLON PRODUCT SPILL COLLECTION BUCKET IS REQUIRED BY NYC FIRE CODE. FILL SPILL BUCKETS MUST HAVE A NYC CERTIFICATE OF APPROVAL FROM FIRE DEPARTMENT.

(6) TURBINE INSTALLATION:

STANDARD: CONTRACTOR TO INSTALL FE PETRO IST 2 HP VARIABLE SPEED TURBINES AND PIPING CONNECTION VALVES AND FITTINGS IN TANK SUMPS AS SHOWN ON SITE SPECIFIC DETAIL DRAWINGS. ALL PRODUCT LINES TO TURBINES TO BE EQUIPPED WITH 3 GPH ELECTRONIC LINE LEAK DETECTION. LEAK DETECTORS ARE TO BE TESTED FOR THE 3 GPH LEAK DETECTION PRIOR TO START UP. CONTRACTOR TO PROVIDE TEST DATA AT THE TIME OF PUNCH LIST AS WELL AS INCLUDE IN CLOSE OUT BINDER. ALL TURBINES ARE EQUIPPED WITH STANDARD "R" CHECK VALVE AS A STANDARD FROM FACTORY. SET TURBINE INTAKES AT 5" FROM BOTTOM OF TANKS. TURBINES TO BE EQUIPPED WITH INTAKE FILTER SCREENS. CONTRACTOR TO INSTALL 1" RIGID STEEL CONDUITS FOR SUBMERSIBLE PUMP POWER. (ONE FOR EACH TURBINE). CONTRACTOR IS TO LABEL TURBINES AND CONTROLLERS AS TO WHICH PRODUCT THEY SERVE. GREEN CONTROLLER LIGHTS ARE TO GO OUT WHEN TURBINES ARE OFF OR LOSE POWER. IST PUMP CONTROLS ARE TIED TO VEEDER ROOT CONTROL PANEL. SEE APPROPRIATE TURBINE CONFIGURATION AND PROGRAMMING SHEETS.

SINGLE MASTER TURBINE CONFIGURATIONS – EQUIPPED AS NOTED ABOVE. SEE APPROPRIATE SITE SPECIFIC DRAWINGS FOR INSTALLATION DETAILS.

MASTER-SATELLITE TURBINE CONFIGURATIONS – EQUIPPED AS NOTED ABOVE EXCEPT: ONLY THE MASTER TURBINE SHALL HAVE THE PLLD LEAK DETECTOR INSTALLED. CONTRACTOR TO REMOVE THE STANDARD "R" CHECK VALVE OUT OF THE SATELLITE TURBINE. THE BALL VALVE ON MANIFOLD LINE BETWEEN TURBINES SHALL BE SET IN THE "OPEN" POSITION AND A SINGLE PLLD PART #848-480-001 (TLS350) OR
DPLLD PART #859080-001 (TLS450) IS TO BE INSTALLED ON THE MASTER IST WITH AN FE. PETRO NON-VENTED PRECISION CHECK VALVE (PART #65 PSI) INSTALLED ON THE SATELLITE IST PREVENTING BACKFILLING OF USTs. SEE APPROPRIATE SITE SPECIFIC DRAWINGS FOR INSTALLATION DETAILS.

MASTER-MASTER TURBINE CONFIGURATIONS – EQUIPPED AS NOTED ABOVE EXCEPT: THE BALL VALVE ON MANIFOLD LINE BETWEEN TURBINES SHALL BE SET IN THE "CLOSED" POSITION DURING NORMAL OPERATION. SEPARATE LINES & (2) PLLDs PART #848-480-001 (TLS350)
OR (2) DPLLDs PART #859080-001 (TLS450) SHALL BE INSTALLED. IN CASE OF FAILURE OF AN INDIVIDUAL IST, THE PRODUCT CROSS-OVER LINE CAN BE PLACED INTO OPERATION BY OPENING THE CROSS CONNECTING VALVE. THE FAILED IST MUST HAVE ITS PLLD DISABLED & DISPENSER SIGNAL WIRES NEED TO BE MODIFIED FOR THIS TEMPORARY SET-UP. SEE APPROPRIATE SITE SPECIFIC DRAWINGS FOR INSTALLATION DETAILS.

ARCO LARGE SITE VARIANT – IF SITE HAS 9 OR MORE MPD'S, TWO (2) 2 HP VARIABLE SPEED TURBINES ARE TO BE INSTALLED IN THE PRIMARY REGULAR UNLEADED TANK. THE REGULAR UNLEADED TURBINES SHALL BE SET UP AS "MASTER/SATELLITE/SATELLITE" AND THE CROSS CONNECTION MANIFOLD BETWEEN TANKS SHALL BE OPENED ALLOWING ALL THREE TURBINES TO SERVE THE ENTIRE SITE.

NYC VARIANT: MASTER-MASTER TURBINE CONFIGURATION W/ ROTATING STARTS – EQUIPPED AS NOTED ABOVE FOR MASTER-SATELLITE CONFIGURATION EXCEPT WITHOUT SIPHON LINE BETWEEN TANKS: THE UST PRODUCT LEVEL BALANCING IS ACHIEVED BY ROTATING THE STARTING OF INDIVIDUAL IST'S WITH CONTROL LOGIC LINKED TO THE VEEDER ROOT ATG. THE PRODUCT LINES ARE CONNECTED BY A CROSS OVER MANIFOLD BETWEEN TURBINES. ONE IST, THE MASTER, SHALL HAVE A PLLD LEAK DETECTION DEVICE INSTALLED PLLDs PART #848-480-001 (TLS350)
OR (2) DPLLDs PART #859080-001 (TLS450) AND THE SATELLITE SHALL HAVE AN FE PETRO NON-VENTED PRECISION CHECK VALVE (PART #65 PSI) INSTALLED. THE BALL VALVE ON MANIFOLD LINE BETWEEN TURBINES SHALL BE SET IN THE "OPEN" POSITION DURING NORMAL OPERATION. IN CASE OF FAILURE OF AN INDIVIDUAL IST, NO ADJUSTMENT TO THE DISPENSER SIGNAL WIRES WILL BE REQUIRED AS THE IST CONTROLLERS WILL ACCOMMODATE THE IST STARTING VIA THE VEEDER ROOT ATG LINK. THE PRODUCT IN THE UST WITH THE FAILED IST WILL HAVE THE PRODUCT LEFT IN A STATIC STATE AND NOT AVAILABLE FOR DISPENSING UNTIL A REPAIR IS MADE. SEE APPROPRIATE SITE SPECIFIC DRAWINGS FOR INSTALLATION DETAILS.

(7) SIPHON LINE INSTALLATION:

STANDARD: WHEN SITE SPECIFIC TANK CONFIGURATION SHOWS MULTIPLE TANKS FOR IDENTICAL PRODUCTS, CONTRACTOR TO INSTALL 4" OVER 3" DOUBLE WALL FIBERGLASS SIPHON LINES AND PIPING CONNECTION VALVES AND FITTINGS BETWEEN TANKS. INSTALL SIPHON PIPING AS LOW AS POSSIBLE IN SUMP. NOTE LIMITATION ON MAXIMUM SIPHON PIPING SYSTEM HEIGHT ON DETAILS. ADJUST HEIGHT DOWN FOR SMALLER DIAMETER TANKS. CONTRACTOR TO INSTALL VEEDER ROOT SIPHON BREAK, IF APPROPRIATE FOR MARKET CONDITIONS. SEE APPROPRIATE SITE SPECIFIC DRAWINGS FOR INSTALLATION DETAILS.

NYC VARIANT: SIPHON PIPING IS NOT INSTALLED. SEE TURBINE INSTALLATION NOTE ABOVE. SEE SITE SPECIFIC DRAWINGS FOR INSTALLATION DETAILS.

ARCO BRANDED VARIANT: CONTRACTOR TO INSTALL 4" OVER 3" DOUBLE WALL FIBERGLASS SIPHON PIPING. SIPHON BREAK IS NOT INSTALLED. INSTALL SIPHON PIPING AS LOW AS POSSIBLE IN SUMP. NOTE LIMITATION ON MAXIMUM SIPHON PIPING SYSTEM HEIGHT ON DETAILS. ADJUST HEIGHT DOWN FOR SMALLER DIAMETER TANKS. SEE APPROPRIATE SITE SPECIFIC DRAWINGS FOR INSTALLATION DETAILS.

CALIFORNIA VARIANT: SIPHON PIPING TO BE INSTALLED WITH CONTINUOUS VACUUM MONITORING DEVICE PER AB-2481 REQUIREMENTS

(8) PRODUCT PIPING INSTALLATION:

STANDARD: CONTRACTOR TO INSTALL DOUBLE WALL FIBERGLASS PRODUCT PIPING, CONNECTORS, VALVES AND FITTINGS IN TANK AND DISPENSER SUMPS AS SHOWN ON SITE SPECIFIC DETAIL DRAWINGS TO SUPPLY DISPENSERS. PRODUCT PIPING TO BE N.O.V. RED THREAD IIA, 2" INSIDE 3" DIAMETER AS INDICATED ON SITE SPECIFIC FUELING PLAN. ALL PIPING AND FITTINGS SHALL BE UL-971 LISTED IN COMPLIANCE WITH THE JULY 2005 PERFORMANCE STANDARDS, AND SHALL BE COMPATIBLE WITH ETHANOL, INCLUDING BUT NOT LIMITED TO "E25/B20" (25% ETHANOL 75% GASOLINE). PRODUCTS LINES TO BE EQUIPPED 3 GPH PRESSURE LINE LEAK DETECTORS (PLLD) ON TURBINES AND WITH LIQUID LEAK MONITORING SENSORS LOCATED IN TURBINE PIPING SUMPS ATTACHED TO TANKS WIRED FOR TURBINE SHUT DOWN. PRODUCT PIPING IN TURBINE SUMPS, PRODUCT PIPING CROSS CONNECTION MANIFOLDS BETWEEN SUMPS AND SIPHON PIPING PENETRATIONS ARE TO ENTER THE SAME SIDE OF THE SUMP IF POSSIBLE. IF PRODUCT PENETRATION ENTERS ON BOTH SIDES OF SUMP DUE TO FIELD CONDITIONS, THEN DUAL SENSORS AT TURBINE SUMP MAY BE REQUIRED TO BE INSTALLED BY LOCAL REGULATIONS. IF THE BP PROJECT MANAGER DETERMINES THAT THE ALL THE PIPING ENTRIES NOTED ABOVE COULD HAVE BEEN MADE TO THE SAME SIDE OF THE SUMP, THEN ANY COSTS ASSOCIATED WITH EXTRA SENSORS SHALL BE BORNE BY THE INSTALLING CONTRACTOR. PIPING TO BE INSTALLED WITH A SLOPE OF 1/8" PER FOOT MINIMUM TO TANKS UNLESS APPROVED BY OWNER. CONTRACTOR TO INSTALL TRACER TAPE WITH PRODUCT PIPING PER TRENCHING DETAILS. PENETRATIONS INTO ALL SUMPS SHALL BE MADE WITH DOUBLE WALL FRP ENTRY FITTINGS. TESTING OF PRODUCT LINES SHALL BE PERFORMED PRIOR TO BACK FILL, PRIOR TO PAVING AND BEFORE STATION OPERATION. SEE SITE SPECIFIC DETAIL SHEETS FOR INSTALLATION DETAILS.

NOTE "FIBERCAST SYSTEMS" PIPING TO BE INSTALLED PER MANUFACTURER'S INSTALLATION MANUAL AND SHALL ONLY BE INSTALLED BY QUALIFIED INSTALLERS CERTIFIED BY THE MANUFACTURER.
CALIFORNIA VARIANT: IN ADDITION TO THE ABOVE, PIPING TO BE INSTALLED WITH CONTINUOUS VACUUM MONITORING DEVICE PER AB-2481 REQUIREMENTS

(9) VENT PIPING INSTALLATION:

STANDARD: CONTRACTOR TO INSTALL 2" INDIVIDUAL SINGLE WALL FIBERGLASS VENT PIPING, CONNECTORS, VALVES AND FITTINGS ON TANKS AS INDICATED ON SITE SPECIFIC FUELING PLAN AND ACCOMPANYING DETAILS. CONTRACTOR TO PROVIDE AT LEAST 4 FEET OF PIPING RUN BEFORE A CHANGE OF DIRECTION OF 30 DEGREES OR MORE IN ORDER TO PROVIDE MECHANICAL FLEXIBILITY PER CODE REQUIREMENTS. CONTRACTOR TO INSTALL TRACER TAPE WITH VENT PIPING PER TRENCHING DETAILS. PENETRATIONS INTO ALL SUMPS SHALL BE MADE WITH SINGLE WALL ENTRY FITTINGS. VENT PIPING SHALL BE DESIGNED AND INSTALLED FOR SLOPE 1/4" PER FOOT MINIMUM BACK TO TANKS. FOR LONG PIPING RUNS 1/8" PER FOOT IS ACCEPTABLE.

CONTRACTOR TO INSTALL ABOVE GROUND RISERS AND MOUNTING RACK AS DETAILED ON THESE PLANS. TERMINATION POINT OF TANK VENTS TO BE A MINIMUM OF 12' ABOVE GRADE AND NOT WITHIN 5' FROM ANY BUILDING OPENING OR PROPERTY LINE THAT CAN BE BUILT UPON. VENT RISERS SHALL BE INSTALLED IN ACCORDANCE WITH NFPA-30, INTERNATIONAL AND UNIFORM FIRE CODE REQUIREMENTS AND CARB EVR REQUIREMENTS.

CONTRACTOR TESTING OF VENT LINES SHALL BE PERFORMED PRIOR TO BACK FILL, PRIOR TO PAVING AND BEFORE STATION OPERATION. SEE SITE SPECIFIC DETAIL SHEETS FOR INSTALLATION DETAILS. SEE FIBERGLASS PIPING MANUFACTURER SPECIFICATION BELOW.

VENT PIPING SPECIFICATION:

FIBERCAST SYSTEMS: RED THREAD II PIPE AND FITTINGS (USED FOR SINGLE WALL). WHERE DOUBLE WALL SYSTEMS ARE REQUIRED FOR ALL VENT AND VAPOR PIPING, USE SIZE OVER SIZE RED THREAD II PIPING AND FITTINGS. USE ONLY FIBERCAST SYSTEMS ALCOHOL COMPATIBLE ADHESIVES. ALL PIPING AND FITTINGS SHALL BE UL-971 LISTED IN COMPLIANCE WITH THE JULY 2005 PERFORMANCE STANDARDS.

PIPING TO BE INSTALLED PER MANUFACTURER'S LISTED INSTRUCTIONS AND SHALL ONLY BE INSTALLED BY QUALIFIED INSTALLERS CERTIFIED BY THE MANUFACTURER. PROVIDE AT LEAST 4' OF STRAIGHT PIPING RUN BEFORE A CHANGE OF DIRECTION OF MORE THAN 30 DEGREES AND INSTALL FLEXIBLE CONNECTORS AT THE VENT AND VAPOR CONNECTION AT THE TANK SUMPS, AND DISPENSER SUMPS.

NYC VARIANT: SAME AS ABOVE EXCEPT: VENT CONNECTIONS ARE ROUTED TO A SEPARATE UNOBSTRUCTED EXTRACTOR FITTING LOCATED IN THE TURBINE SIDE. VENT TERMINATION TO BE A MINIMUM OF 15' ABOVE GRADE.

JURISDICTIONAL VARIANT: INSTALL DOUBLE WALL SIZE OVER SIZE FIBERGLASS PIPING WHEN REQUIRED BY AUTHORITY HAVING JURISDICTION.

CALIFORNIA VARIANT: VENT PIPING TO BE DOUBLE WALLED AND INSTALLED WITH CONTINUOUS VACUUM MONITORING DEVICE PER AB-2481 REQUIREMENTS

(10) STAGE II VAPOR RECOVERY PIPING INSTALLATION:

STANDARD: CONTRACTOR TO INSTALL 3" SINGLE WALL FIBERGLASS STAGE II VAPOR RECOVERY HEADER, CONNECTORS, VALVES AND FITTINGS TO THE LOWEST OCTANE GRADE AS INDICATED ON SITE SPECIFIC FUELING PLAN AND ACCOMPANYING DETAILS. NOTE THAT THE 1ST CONNECTION FROM STAGE II VAPOR RECOVERY HEADER TO LOWEST OCTANE TANK SHALL BE 3". ALL OTHER CONNECTIONS TO ADDITIONAL TANKS SHALL BE MADE WITH 2". CONTRACTOR TO INSTALL 3" TO 2" REDUCING TEES WHERE HEADERS BRANCH TO DISPENSERS. MAXIMUM (2) DISPENSERS PER 2" BRANCH. CONTRACTOR TO PROVIDE AT LEAST 4 FEET OF STRAIGHT PIPING RUN BEFORE A CHANGE OF DIRECTION OF 30 DEGREES OR MORE IN ORDER TO PROVIDE MECHANICAL FLEXIBILITY PER CODE REQUIREMENTS. CONTRACTOR TO INSTALL TRACER TAPE WITH VAPOR PIPING PER TRENCHING DETAILS. PENETRATIONS INTO ALL SUMPS SHALL BE MADE WITH DOUBLE WALL ENTRY FITTINGS. STAGE II VAPOR RECOVERY PIPING SHALL BE DESIGNED AND INSTALLED FOR 1/4" PER FOOT MINIMUM SLOPE BACK TO TANKS. AT LARGE SITE LAYOUTS, 1/8" PER FOOT MINIMUM IS ACCEPTABLE IF IT AVOIDS USING A KNOCK OUT SUMP (VAPOR POT) OR HAVING EXCESSIVE TANK DEPTH. CONSULT OWNER'S REPRESENTATIVE OR HIS AGENT, THE BP PROJECT MANAGER, WHERE DISCREPANCIES OCCUR.

CONTRACTOR TESTING OF STAGE II VAPOR LINES SHALL BE PERFORMED PRIOR TO BACK FILL, PRIOR TO PAVING AND BEFORE STATION OPERATION. SEE SITE SPECIFIC DETAIL SHEETS FOR INSTALLATION DETAILS. SEE FIBERGLASS PIPING MANUFACTURER SPECIFICATION BELOW.

STAGE II PIPING SPECIFICATION:

FIBERCAST SYSTEMS: RED THREAD II PIPE AND FITTINGS (USED FOR SINGLE WALL). WHERE DOUBLE WALL SYSTEMS ARE REQUIRED FOR ALL VENT AND VAPOR PIPING, USE SIZE OVER SIZE RED THREAD II PIPING AND FITTINGS. USE ONLY FIBERCAST SYSTEMS ALCOHOL COMPATIBLE ADHESIVES. ALL PIPING AND FITTINGS SHALL BE UL-971 LISTED IN COMPLIANCE WITH THE JULY 2005 PERFORMANCE STANDARDS.

PIPING TO BE INSTALLED PER MANUFACTURER'S LISTED INSTRUCTIONS AND SHALL ONLY BE INSTALLED BY QUALIFIED INSTALLERS CERTIFIED BY THE MANUFACTURER. PROVIDE AT LEAST 4' OF STRAIGHT PIPING RUN BEFORE A CHANGE OF DIRECTION OF MORE THAN 30 DEGREES AND INSTALL FLEXIBLE CONNECTORS AT THE VENT AND VAPOR CONNECTION AT THE TANK SUMPS, AND DISPENSER SUMPS.

JURISDICTIONAL VARIANT: INSTALL DOUBLE WALL SIZE OVER SIZE FIBERGLASS PIPING WHEN REQUIRED BY AUTHORITY HAVING JURISDICTION.

CALIFORNIA VARIANT: STAGE II VAPOR PIPING TO BE DOUBLE WALLED AND INSTALLED WITH CONTINUOUS VACUUM MONITORING DEVICE PER AB-2481 REQUIREMENTS. ALL CONNECTIONS TO THE TANKS SHALL BE MADE WITH 3".

THERE ARE (4) FOUR STAGE II EVR WITH ISD DESIGN CHOICES THAT MAY BE INCORPORATED INTO THE UST SYSTEMS IN CALIFORNIA.
1. VEEDER ROOT CARBON CANISTER VAPOR POLISHER WITH VST BALANCE HANGING HARDWARE AND VEEDER ROOT ISD COMPONENTS.
2. HEALY CLEAN AIR SEPARATOR WITH HEALY VACUUM ASSIST HANGING HARDWARE AND VEEDER ROOT ISD COMPONENTS.
3. VST ECS VAPOR PROCESSOR WITH VST BALANCE HANGING HARDWARE AND VEEDER ROOT ISD COMPONENTS.
4. VST BALANCE HANGING HARDWARE WITH FRANKLIN FUELING/HEALY CLEAN AIR SEPARATOR AND VEEDER ROOT ISD COMPONENTS.

SEE GENERAL SHEETS G.0.6 SERIES DRAWINGS FOR DESIGN INTENT DETAILS ON THE ABOVE SYSTEMS.

NYC VARIANT: STAGE II VAPOR RECOVERY IS CURRENTLY NOT REQUIRED IN NYC & NEW JERSEY MARKET

NOTE: CONTACT BP FUEL SYSTEM DESIGN MANAGER FOR CURRENT STATES NO LONGER REQUIRING STAGE II VAPOR RECOVERY

(10A) DECOMMISSIONING STAGE II VAPOR RECOVERY:

STANDARD: FOR PROJECTS INVOLVING THE DECOMMISSIONING OF STAGE II VAPOR RECOVERY SYSTEMS, G.C. IS TO VERIFY WITH THE AUTHORITY HAVING JURISDICTION THAT STAGE II IS NO LONGER REQUIRED AT A SPECIFIC FACILITY BEFORE INITIATING THE DECOMMISSIONING WORK AND WHICH DECOMMISSIONING PROCEDURES ARE REQUIRED TO BE IMPLEMENTED. SEE SHEET G.0.6.15. FOR GENERAL REQUIREMENTS AND PROCEDURES. CONSULT OWNER'S REPRESENTATIVE OR HIS AGENT, THE BP PROJECT MANAGER, WHERE DISCREPANCIES OCCUR BETWEEN THE CONTRACT DOCUMENTS AND THE REQUIREMENTS OF THE AUTHORITY HAVING JURISDICTION.

CLIENT:
bp
ARCO
BP WEST COAST PRODUCTS, LLC

Barghausen
Consulting Engineers, Inc.
18215 72nd Avenue South
Kent, WA 98032
425.251.6222
barghausen.com

NO.	DATE	REVISION DESCRIPTION
1	10/04/23	PERMIT RELEASE
2		
3		
4		
5		
6		
7		
8		
9		
10		
11		
12		

SEAL:
HAL P. GRUBB
STATE OF WASHINGTON
23975
REGISTERED PROFESSIONAL ENGINEER
10/4/2023

DEVELOPMENT INFORMATION:
ARCO NTI
3400 am/pm
FUEL CANOPY w/ 6 MPD's

SITE ADDRESS:
SWC S MERIDIAN
@ HIGHWAY 512
PUYALLUP, WASHINGTON
FACILITY #TBD

DESIGNED BY:	NP/RF	ALLIANCE Z&DM:	
CHECKED BY:	OV	BP REPM:	
DRAWN BY:	NP/RF	ALLIANCE PM:	
VERSION:	V-15.0 01/01/2023	PROJECT NO:	21730

DRAWING TITLE:
TANK AND PIPING
SCOPE OF WORK
AND GENERAL NOTES
(FRP 1 OF 2)

SHEET NO:
G.0.2.1

P:\21000s\21730\mechanical\tanks\21730 G.0.2.1 & G.0.2.2.dwg 10/2/2023 1:25 PM NPHAN

TANK AND PIPING INSTALLATION SCOPE OF WORK:

(11) METAL PIPE AND FITTINGS:

STANDARD: STEEL PIPE SHOWN ON THESE DRAWINGS TO BE MINIMUM SCHEDULE 40. METAL PRODUCT LINE FITTINGS TO BE MALLEABLE IRON CLASS 150, GALVANIZED. ALL MALLEABLE IRON FITTINGS SHALL BE SUPPLIED BY "ANVIL" (FORMERLY "GRINNELL") OR EQUAL SPECIFICATIONS AS FOLLOWS:

	DIMENSIONS	MATERIAL	GALVANIZING	THREAD	PRESSURE RATING
M.I. FITTINGS (TEES, ELBOWS) CLASS 150/PN 20	ASME B16.3	ASTM A-197	ASTM A-153	ASME B.1 20.1	ASME B16.3
M.I. UNIONS CLASS 150/PN 20	ASME B16.39	ASTM A-197	ASTM A-153	ASME B.1 20.1	ASME B16.3
STEEL PIPE NIPPLES CLASS 150/PN 20	ASTM A733	ASTM A-53 (F OR E)	ASTM A-153	ASME B.1 20.1	ASME B16.3
STEEL PIPE CLASS 150/PN 20 SCHEDULE 40	N/A	ASTM A-53 (F OR E)	ASTM A-153	ASME B.1 20.1	ASME B16.3

GASOLINE/ALCOHOL COMPATIBLE THREAD SEALANT LIKE LOCTITE 567 SHALL BE USED ON ALL THREADED PIPE CONNECTIONS.
ANY METAL PIPE OR FITTING USED FOR PRODUCT, VENT, OR VAPOR RECOVERY WHICH CONTACTS SOIL OR BACK FILL MUST BE 100% COVERED WITH A 3M SCOTCHRAP PRIMER AND 3M TEMFLEX 10 MIL. OR 10 MIL. SELF-PRIME PROSELECT PIPE TAPE.

(12) PIPING SUMP PENETRATION INSTALLATION:

STANDARD: CONTRACTOR TO INSTALL SUMP PENETRATION FITTINGS. ALL PENETRATIONS OF THE SUMPS TO BE ON A LINE TOWARD THE CENTER OF THE SUMP, NOT TO EXCEED MANUFACTURERS RECOMMENDED ANGLE IN ANY DIRECTION, TO ENSURE THE PROPER INSTALLATION OF ALL BULKHEAD AND COMPRESSION FITTINGS AND RESULTANT WATER TIGHTNESS. ALL PIPING, CONDUIT AND GROUNDS THAT PENETRATE THE SUMP SIDE WALLS MUST BE SEALED WITH DOUBLE SIDED BULKHEAD FITTINGS IN SUMPS. SUMPS SHALL BE HYDROSTATICALLY TESTED WITH STANDING WATER FOR A PERIOD OF 24 HOURS OR CERTIFIED USING SUMP MANUFACTURERS APPROVED TESTING PROCEDURE TO INSURE THAT SUMPS ARE WATERTIGHT. THE OWNER'S ENGINEER, THE BP PROJECT MANAGER MUST SIGN OFF ON THIS TESTING ON THE TANK INSTALLATION CHECK LIST.

MANUFACTURER ENTRY BOOT TYPE VARIANT: THE MAKE AND MODEL NUMBERS OF THE PIPING PENETRATION FITTINGS SHOWN IN THE DETAILS ARE NOT SUBJECT TO CHANGE. N.O.V. FRP BONDED ENTRY FITTINGS ARE REQUIRED FOR ALL PIPING PENETRATIONS. CONDUIT PENETRATIONS INTO SUMPS SHALL BE AS SPECIFIED ON THE PLANS.

CALIFORNIA VARIANT: CONTRACTOR TO INSTALL SUMP PENETRATION FITTINGS THAT MEET THE ADDITIONAL CRITERIA REQUIREMENT FOR CONTINUOUS HYDROSTATIC AND VACUUM MONITORING.

(13) DISPENSER INSTALLATION:

STANDARD: CONTRACTOR TO INSTALL "WAYNE OVATION" STYLE DISPENSERS WITH INTEGRATED CARD READERS AND INTERCOM SYSTEM AS SHOWN ON SITE SPECIFIC DESIGN DETAIL SHEETS. DISPENSERS TO BE INSTALLED PER MANUFACTURER'S INSTALLATION INSTRUCTIONS. INSTALLATION TO INCLUDE DISPENSER ISLANDS, SINGLE WALL DISPENSER CONTAINMENT SUMPS, AND THE INSTALLATION OF ALL SHEAR VALVES, RISERS, PIPING CONNECTIONS AND ALL PENETRATIONS INTO THE SUMPS. SEE TANK ELECTRICAL DRAWINGS FOR CONDUIT AND WIRING REQUIREMENTS.

DISPENSER START UP: - START UP BY MANUFACTURERS REPRESENTATIVE. CONTRACTOR TO PURGE LINES WITH 200 GALLONS PER HOSE MINIMUM. ANY AIR POCKETS OR START UP PROBLEMS DUE TO IMPROPER INSTALLATION OR INCORRECT WIRING THAT DESTROYS ELECTRONICS WILL BE BILLED BACK TO THE CONTRACTOR

NYC VARIANT: DISPENSER SUMPS SHALL BE BACK FILLED WITH PEA GRAVEL PER NYC CODE. DISPENSER ISLAND SHALL BE EQUIPPED WITH A FIRE SUPPRESSION SYSTEM. SEE FIRE SUPPRESSION DETAILS FOR INSTALLATION REQUIREMENTS.

ARCO BRANDED VARIANT: DISPENSERS INSTALLED WITHOUT CARD READERS IN DISPENSERS. CONTRACTOR TO INSTALL TWO (2) DOUBLE SIDED PAYMENT ISLAND CASHIERS (PIC UNITS) AS SHOWN ON SITE SPECIFIC PLANS. START UP BY MANUFACTURERS REPRESENTATIVE. START UP PROBLEMS DUE TO IMPROPER INSTALLATION OR INCORRECT WIRING THAT DESTROYS ELECTRONICS WILL BE BILLED BACK TO THE CONTRACTOR. REFER TO ARCHITECTURAL CANOPY DRAWINGS FOR ADDITIONAL SITE PREP AND CONDUIT REQUIREMENTS.

CALIFORNIA VARIANT: DISPENSER SUMPS TO BE DOUBLE WALL AND INSTALLED WITH CONTINUOUS HYDROSTATIC MONITORING DEVICE PER AB-2481 REQUIREMENTS

INSTALLATION OF HANGING HARDWARE:
STANDARD: - CONTRACTOR TO INSTALL VAPOR ASSIST HOSES, NOZZLES, SWIVELS AND BREAK AWAY VALVES PER '96' CARB EXECUTIVE ORDER G-70-153-AD. SITES WHERE ORVR COMPATIBLE SYSTEMS ARE NOT REQUIRED

ARCO BRAND VARIANT - CONTRACTOR TO INSTALL ORVR COMPATIBLE BALANCE HOSES, NOZZLES, SWIVELS AND BREAK AWAY VALVES PER CARB EXECUTIVE ORDER G-70-52-AM PER LOCAL STATUES.

CALIFORNIA VARIANT - CONTRACTOR TO INSTALL ORVR/PHASE II EVR COMPATIBLE HOSES, NOZZLES, SWIVELS AND BREAK AWAY VALVES PER APPLICABLE CARB EXECUTIVE ORDER WITH IN SYSTEM DIAGNOSTICS (ISD) PER LOCAL JURISDICTIONAL REQUIREMENTS.

NEW JERSEY VARIANT - CONTRACTOR TO INSTALL LOW PERMEATION HOSE AND COMPATIBLE HARDWARE. SEE SHEET G.0.6.15

(14) SUMP SENSOR INSTALLATION:

CONTRACTOR TO INSTALL ALL FILL SUMP, TURBINE SUMP AND DISPENSER SUMP SENSORS PER VEEDER ROOT INSTALLATION INSTRUCTIONS. SUMP SENSORS TO BE INSTALLED IN SUMP HOLDERS MOUNTED TO SIDE OF SUMP WALLS SEE TANK DETAIL SHEETS FOR LIQUID SENSOR DETAILS. TURBINE SIDE SUMP SENSORS TO BE MOUNTED AT SIDE OF TANK WHERE PRODUCT PENETRATION INTO SUMP IS MADE AND BELOW LOWEST PENETRATION FITTING WITHIN SUMP AREA AT BOTTOM OF SUMP. SEE TANK ELECTRICAL DRAWINGS FOR MONITORING CONDUIT DETAILS AND SENSOR AND PROBE WIRING DETAILS.

(15) OVERFILL ALARM AND ACKNOWLEDGE SWITCH INSTALLATION:

CONTRACTOR TO INSTALL OVERFILL ALARM & ACKNOWLEDGMENT AS SHOWN. ALARM AND SWITCH TO BE LOCATED TO PROVIDE AN UNOBSTRUCTED VIEW TO TRUCK DRIVER. PROVIDE BOLLARD PROTECTION OF FREE STANDING POLE. SEE SITE SPECIFIC WIRING DIAGRAM AND DETAILS FOR MOUNTING REQUIREMENTS.

(16) VEEDER ROOT CONSOLE INSTALLATION:

CONTRACTOR TO INSTALL "VEEDER ROOT TLS-450 PLUS" TANK AND LINE ALARM CONTROL PANEL IN BUILDING. INSTALL PER MANUFACTURER'S INSTALLATION INSTRUCTIONS. SEE ARCHITECTURAL AND ELECTRICAL DRAWINGS FOR EXACT LOCATION IN BUILDING.

CALIFORNIA VARIANT: TLS-350 PLUS CONSOLE TO BE EQUIPPED WITH ADDITIONAL SENSOR MODULES TO ADDRESS AB-2481 AND CARB ISD REQUIREMENTS. TLS-450 PLUS WILL BE REQUIRED ONCE APPROVED BY CALIFORNIA

NYC VARIANT: CONSOLE TO BE PROGRAMMED FOR MASTER/MASTER ALTERNATE START

(17) CONCRETE SLAB INSTALLATION:

REFER TO PROJECT GENERAL SPECIFICATIONS FOR ADDITIONAL CONCRETE REQUIREMENTS NOT INDICATED ON THESE DRAWINGS.

STANDARD:
1. CONCRETE SLAB OVER TANKS WITH A MINIMUM 8" THICK FIBER REINFORCEMENT TO BE USED. REINFORCE CONCRETE SLAB AROUND MANHOLES WITH (4) #4 REBAR, 60" IN LENGTH FOR THE LARGE MANHOLES AND 30" FOR SMALL MANHOLES PLACE REBAR 6" FROM SIDES OF BOX. SEE RECIPE BELOW.
2. CONCRETE DRIVE SLAB AT CANOPY FUELING AREA WITH A MINIMUM 6" THICK FIBER REINFORCED CONCRETE TO BE USED. SEE RECIPE BELOW.
3. CONCRETE FORMLESS ISLAND WITH A 6" HEIGHT ABOVE FINISHED GRADE FIBER REINFORCED CONCRETE TO BE USED. SEE RECIPE BELOW.

NYC VARIANT:
1. CONCRETE SLAB OVER TANKS WITH A MINIMUM 10" THICKNESS REINFORCED WITH C#5 REBARS @ 12" O.C. EACH WAY TOP & BOTTOM. REINFORCE CONCRETE SLAB AROUND MANHOLES WITH (4) #4 REBAR, 60" IN LENGTH FOR THE LARGE MANHOLES AND 30" FOR SMALL MANHOLES PLACE REBAR 6" FROM SIDES OF BOX. SEE RECIPE BELOW.
2. CONCRETE SLAB BELOW TANKS WITH A MINIMUM 12" THICKNESS, REINFORCED WITH TWO LAYERS OF 6X6-W7.4.XW7.4 ON 2" STEEL CHAIRS TOP & BOTTOM. SEE RECIPE BELOW.
3. LOAD BEARING 12"X16" CONCRETE BLOCK PIERS FILLED WITH TYPE "M" MORTAR SPACED NO MORE THAN 3'-2" APART. FOR ALTERNATE SONOTUBE PIER CONFIGURATION A MINIMUM 16" DIAMETER CONCRETE PIER WITH #3 REBAR HORIZONTAL TIES SPACED EVERY 2' VERTICALLY AND (5) #5 VERTICAL REBARS SPACE EQUALLY
4. CONCRETE DRIVE SLAB AT CANOPY FUELING AREA WITH A MINIMUM 6" THICK, REINFORCED WITH TWO LAYERS OF 6X6-W5.5XW5.5 ON 2" STEEL CHAIRS TOP & BOTTOM.
5. CONCRETE FORMLESS ISLAND WITH A 6" HEIGHT ABOVE FINISHED GRADE FIBER REINFORCED CONCRETE TO BE USED. SEE RECIPE BELOW.
6. CONCRETE WALKWAY WITH A MINIMUM 4" THICK FIBER REINFORCED CONCRETE TO BE USED. SEE RECIPE BELOW.
7. CONCRETE DRIVEWAY WITH A MINIMUM 7" THICK FIBER REINFORCED CONCRETE TO BE USED. SEE RECIPE BELOW.

CALIFORNIA VARIANT:
1. CONCRETE SLAB OVER TANKS WITH A MINIMUM 8" THICK FIBER REINFORCEMENT TO BE USED. REINFORCE CONCRETE SLAB AROUND MANHOLES WITH (4) #4 REBAR, 60" IN LENGTH FOR THE LARGE MANHOLES AND 30" FOR SMALL MANHOLES PLACE REBAR 6" FROM SIDES OF BOX. SEE RECIPE BELOW.
2. THICKEN CONCRETE SLAB AT DISPENSER SUMPS AND TANK FILL AND TURBINE SUMPS SUCH THAT THE BOTTOM OF CONCRETE IS BELOW THE TOP OF THE TERMINATION OF THE SECONDARY CONTAINMENT OF THE SUMPS PER AB-2481 REQUIREMENTS.
3. CONCRETE DRIVE SLAB AT CANOPY FUELING AREA WITH A MINIMUM 6" THICK FIBER REINFORCED CONCRETE TO BE USED. SEE RECIPE BELOW.
4. CONCRETE FORMLESS ISLAND WITH A 6" HEIGHT ABOVE FINISHED GRADE FIBER REINFORCED CONCRETE TO BE USED. SEE RECIPE BELOW.

CONCRETE MIX RECIPE. PREMIX UNIFORMLY THROUGHOUT CONCRETE. REINFORCEMENT BARS TO BE NO LESS THAN 2" AND NO MORE THAN 4" FROM SURFACE.
UNLESS OTHERWISE NOTED ON THESE DRAWINGS:
a. CONCRETE - REGULAR WEIGHT HARD ROCK CONCRETE (150 LBS/CU FT)
b. CEMENT - TYPE I/II, SULFATE RESISTANT
c. AGGREGATES - ASTM C33, (MAXIMUM SIZE 3/4 INCHES)
d. 28 DAY CONCRETE STRENGTH (f'c):
 4,000 PSI - SLAB (DESIGN BASED ON 2,000 PSI NO SPECIAL INSPECTION REQUIRED)
e. SLUMP - 3"+ 1" - 4" MAXIMUM AT POINT OF PLACEMENT
f. SHRINKAGE - 0.05% MAXIMUM
g. ENTRAINED AIR RANGE - 2% TO 4%

CONCRETE SHALL BE NORMAL WEIGHT WITH A MIX OF 1 : 2 1/2 : 3 1/2, WITH A MAXIMUM 7 1/2 GALLONS OF WATER PER SACK. ADD 3.0 LB MACRO (STRUCTURAL) FIBER PER CU. YD. REINFORCING CONCRETE.

REINFORCING STEEL FOR TANK SUMP CAGES SHALL BE #4 REBAR.

MAINTAIN CONCRETE IN A MOIST CONDITION FOR AT LEAST 7 DAYS AFTER PLACEMENT.

PLACE CONCRETE DIRECTLY FROM TRUCK INTO FORMS. DO NOT PUMP CONCRETE UNLESS SPECIAL INSPECTION, IN ACCORDANCE WITH CHAPTER 3 OF THE IBC, IS PROVIDED.

SUBMIT MIX DESIGNS, WITH STRENGTH AND SHRINKAGE TEST RESULTS, TO OWNER'S ENGINEER AT LEAST 7 DAYS BEFORE PLACING CONCRETE.

CONSOLIDATE CONCRETE IN PLACE USING A MECHANICAL VIBRATOR.

BEFORE PLACING CONCRETE, SECURE REINFORCING STEEL, ANCHOR BOLTS, DOWELS, AND OTHER INSERTS IN POSITION TO PREVENT MOVEMENT.

MATERIALS AND WORKMANSHIP SHALL CONFORM TO A.C.I. - 318 (SPECIFICATIONS OF THE DESIGN AND PLACEMENT OF CONCRETE).

MANHOLE CROWNS:
ALL MANHOLE OPENINGS ON THE TANK SLAB SHALL BE INSTALLED WITH A 1-1/2" CROWN (1" RISE OVER 12" RUN) OF CONCRETE TO PREVENT WATER INTRUSION INTO THE MANHOLE. THE OWNER'S ENGINEER, THE BP PROJECT MANAGER WILL BE REQUIRED TO SIGN OFF ON THIS ITEM ON THE TANK INSTALLATION CHECKLIST.

PRODUCT IDENTIFICATION MARKINGS:
CONTRACTOR TO INSTALL PRODUCT IDENTIFICATION TAGS AT ALL MANHOLE OPENING PER SITE SPECIFIC DETAIL DRAWINGS.

(18) TESTING:

CONTRACTOR SHALL COMPLETE ALL TESTING ACCORDING TO MANUFACTURER'S INSTRUCTIONS FOR TANKS AND PIPING AND PER INDUSTRY RECOMMENDED PRACTICES (API & PEI). CONTRACTOR SHALL COMPLETE ALL WARRANTY VALIDATION TESTING AND PROVIDE DOCUMENTATION TO OWNER'S REPRESENTATIVE OR HIS AGENT, THE BP PROJECT MANAGER.

PIPE TESTING:
ISOLATE THE PRODUCT TANKS AND DISPENSERS DURING PRESSURE TESTING OF LINES IN ORDER TO PREVENT DAMAGE.

THE DESIGN, ASSEMBLY, AND TESTING OF THE PIPING SYSTEM SHALL BE IN CONFORMANCE WITH THE APPLICABLE SECTION OF ANSI-B31, AMERICAN NATIONAL STANDARD CODE FOR PRESSURE PIPING, NFPA 30, FLAMMABLE AND COMBUSTIBLE LIQUIDS CODE, AND AMERICAN PETROLEUM INSTITUTES RECOMMENDED PRACTICE 1615.

DURING CONSTRUCTION, BEFORE BACK FILLING, PIPING SHOULD BE ISOLATED FROM THE TANKS AND SUBJECTED TO A PIPE TIGHTNESS TEST. OTHER TESTING METHODS MAY ALSO BE ACCEPTABLE IF APPROVED BY THE AUTHORITY HAVING JURISDICTION. A CONSTRUCTION PIPE TEST IS CONDUCTED AS FOLLOWS:

A. THE PRODUCT PIPING TO BE TESTED IS ISOLATED AND PRESSURIZED WITH COMPRESSED AIR TO 150 PERCENT OF THE MAXIMUM SYSTEM OPERATING PRESSURE (OR A MINIMUM OF 50 POUNDS PER SQUARE INCH GAUGE; MAXIMUM AS RECOMMENDED BY COMPONENT MANUFACTURER) FOR AT LEAST 30 MINUTES AND NOT MORE THAN 1 HOUR.
B. ALL PIPING SURFACES INCLUDING VALVES, FITTINGS, JOINTS, AND SO FORTH ARE WETTED WITH A SOAP SOLUTION AND INSPECTED FOR BUBBLES.
C. LEAKS, AS INDICATED BY BUBBLES, ARE REPAIRED OR REPLACED, AND THE PIPING RE-TESTED AS NECESSARY.
D. THE INNER PIPE WALLS SHALL BE TESTED FOR TIGHTNESS BEFORE CLOSING THE OUTER PIPE. THE OUTER PIPE MUST BE TESTED AT A 5 POUNDS PER SQUARE INCH GAUGE MAXIMUM BEFORE BACKFILLING. CARE SHOULD BE TAKEN TO PREVENT OVER PRESSURIZATION OF THE INTERSTICE. IT IS IMPORTANT THAT THE MANUFACTURER'S INSTRUCTIONS BE FOLLOWED. REPEAT BOTH TESTS AFTER BACKFILLING.

WHEN THE PIPING IS INSTALLED AND OPERATIONAL, A HYDROSTATIC TEST OF THE PIPING, AS SPECIFIED IN NFPA 329, MAY BE REQUIRED BY CODES.

CAUTION: EXTREME CARE SHOULD BE EXERCISED IN CONDUCTING PIPE TIGHTNESS TEST. PRESSURIZED PIPING IS POTENTIALLY DANGEROUS BECAUSE OF THE POSSIBILITY OF VIOLENT RUPTURE. THIS TEST SHOULD BE CONDUCTED WITH MINIMUM EXPOSURE OF PERSONNEL AND WITHOUT MOVING OR DISTURBING THE PIPING BEING TESTED. WHEN THE TEST IS COMPLETED, THE PIPING PRESSURE CAN BE REDUCED OR RELEASED COMPLETELY FOR THE REMAINDER OF CONSTRUCTION. REFER TO THE PIPING MANUFACTURER'S RECOMMENDATIONS.

N.O.V. PIPING SHALL BE TESTED ACCORDING TO MANUFACTURER'S SPECIFICATIONS.

VAPOR RECOVER PIPING MUST PASS ALL CARB BLOCKAGE TESTING RELATIVE TO TIGHTNESS, PRESSURE DECAY, & BLOCKAGE RATES. A/L TESTING IS REQUIRED FOR "ASSISTED" STAGE II SYSTEMS (IF INSTALLED). NOTIFY THE BP PROJECT MANAGER TO COORDINATE.

CONTAINMENT SUMP TESTING:
ALL TANK SUMPS AND UNDER DISPENSER CONTAINMENT SUMPS SHALL BE HYDROSTATICALLY TESTED (LAKE TEST) WITH STANDING WATER ABOVE THE LEVEL OF THE HIGHEST PIPE OR CONDUIT PENETRATION FOR A PERIOD OF 24 HOURS AFTER ALL WORK IS COMPLETED TO INSURE THAT THE SUMPS ARE WATERTIGHT OR CERTIFIED USING SUMP MANUFACTURER'S APPROVED TEST PROCEDURE TO INSURE THAT SUMPS ARE WATERTIGHT PER UST REGULATIONS. THE OWNER'S ENGINEER MUST SIGN OFF ON THIS TESTING ON THE TANK INSTALLATION CHECKLIST.

CALIFORNIA VARIANT: ALL DOUBLE WALL SUMPS SHALL BE BRINE FILLED AND INSPECTED FOR TIGHTNESS THROUGHOUT THE INSTALLATION PROCESS ONCE SUMPS HAVE BEEN FILLED WITH BRINE SOLUTION.

FINAL SYSTEM TESTING:
AFTER COMPLETE INSTALLATION OF THE ENTIRE FUEL SYSTEM AND ALL PAVING, THE OWNER'S REPRESENTATIVE OR HIS AGENT, THE BP PROJECT MANAGER, SHALL ARRANGE FOR A PRECISION TANK AND LINE TEST TO BE PERFORMED ON THE COMPLETE SYSTEM. SUCCESSFUL COMPLETION OF THIS TEST WILL BE REQUIRED FOR FINAL APPROVAL. THIS TEST SHALL ENSURE THAT ALL NEW TANK & PIPING SHALL MEET ALL FEDERAL, STATE, & LOCAL REQUIREMENTS FOR TIGHTNESS INTEGRITY, PRIOR TO START-UP OF SYSTEM. OPERATIONALLY TEST ALL OTHER EQUIPMENT, INCLUDING IMPACT (SHEAR) VALVES, LINK LEAK DETECTORS, LEAK DETECTOR ALARMS, AND EMERGENCY SHUTDOWN SWITCHES IN ACCORDANCE WITH THE MANUFACTURER'S INSTRUCTIONS. CONTRACTOR SHALL PROVIDE (3) COPIES OF ALL CERTIFICATIONS & TEST RESULTS TO OWNER'S REPRESENTATIVE OR HIS AGENT, THE BP PROJECT MANAGER.

TANK SYSTEM TEST METHOD CALIFORNIA ONLY AB-2481:
BEFORE THE UNDERGROUND STORAGE TANK IS PLACED INTO USE, THE UNDERGROUND STORAGE TANK SHALL BE TESTED AFTER INSTALLATION USING ONE OF THE FOLLOWING METHODS TO DEMONSTRATE THAT THE TANK IS PRODUCT TIGHT:
1) ENHANCED LEAK DETECTION (ELD) BY TRACER CORPORATION.
2) AN INERT GAS PRESSURE TEST THAT HAS BEEN CERTIFIED BY A THIRD PARTY AND APPROVED BY THE BOARD.
3) A TEST METHOD DEEMED EQUIVALENT TO ENHANCED LEAK DETECTION OR AN INERT GAS PRESSURE TEST BY THE BOARD IN REGULATIONS ADOPTED PURSUANT TO THE APPLICABLE CHAPTER IN THE CODE. AN UNDERGROUND STORAGE TANK INSTALLED AND TESTED IN ACCORDANCE WITH THIS SECTION IS EXEMPT FROM THE REQUIREMENTS OF SECTION 25292.5.

(19) CHECKING FOR PRODUCT QUALITY: INITIAL SITE COMMISSIONING RECOMMENDED PRACTICES

BEFORE OPENING YOUR STORE, IT IS APPROPRIATE AND PROPER PROCEDURE TO CHECK YOUR FUELING EQUIPMENT TO MINIMIZE POSSIBLE PRODUCT QUALITY ISSUES. THIS GUIDANCE MUST BE FOLLOWED TO ENSURE THAT PRODUCT QUALITY HAS BEEN MAINTAINED, AND IS ACCEPTABLE FOR OUR CUSTOMERS.

THE UNDERLYING ASSUMPTION IS THAT THE GENERAL CONTRACTOR, WHO WAS RESPONSIBLE FOR BUILDING YOUR STATION, HAS PROPERLY PERFORMED THEIR JOB AND CHECKED THAT TANKS AND PIPING HAVE BEEN PROPERLY INSTALLED, TESTED, CLEANED, AND LABELED AT A MINIMUM. ANY BP AREA MAINTENANCE MANAGER, OR BP PROJECT MANAGER, HAS A CHECKLIST SHOWING KEY POINTS TO LOOK FOR BEFORE ACCEPTING A SITE AS "COMPLETE" FROM THE CONTRACTOR. SOME KEY AREAS ARE AS FOLLOWS:

1. CONFIRM THAT APPROPRIATE PRODUCT TAGS HAVE BEEN INSTALLED AT THE FILL RISERS.

2. PERFORM A FINAL INSPECTION FOR THE PRESENCE OF WATER IN THE PIPING TO THE DISPENSERS BY OPENING THE TURBINE DISCHARGE CONNECTION AT EACH TURBINE SUMP, AND OPENING/REMOVING THE BLEEDER/TEST PLUG ON IMPACT VALVE. ANY TRAPPED LIQUIDS SHOULD DRAIN BACK TO THE TURBINE SUMP FOR REMOVAL.

3. CONFIRM THAT BOTH GASOLINE AND DIESEL DISPENSERS ARE INSTALLED WITH A MINIMUM (MEANING A MESH SIZE NOT GREATER THAN) 10 MICRON FILTER. ANY FACTORY INSTALLED FILTER AFTER STARTUP MUST BE DISCARDED IN ACCORDANCE WITH USED FUEL FILTER WASTE MANAGEMENT ENVIRONMENTAL GUIDELINES.

4. CONFIRM THAT PROPER DECALS, TAX NUMBERS, AND OTHER SIGNAGE REQUIRED PER PLANS, REGULATORY REQUIREMENTS, AND CONTRACTUAL AGREEMENTS ARE INSTALLED.

5. PERFORM A FINAL INSPECTION FOR THE PRESENCE OF WATER WITHIN THE UNDERGROUND STORAGE TANKS, OR IN THE PIPING GOING TO THE DISPENSERS. INSPECTION FOR WATER IN THE TANK SHALL BE PERFORMED USING SARGEL'S WATER FINDING PASTE (OR EQUAL), AND CONDUCTED AT BOTH ENDS OF THE TANK. IF LEVELS OF WATER GREATER THAN 1/4" ARE DETECTED, PROCEED WITH WATER ELIMINATION PROCEDURES, AND REQUEST THAT THE CONTRACTOR DO THIS AS PART OF THEIR SCOPE OF WORK.

6. THE BP REPRESENTATIVE (REGIONAL ACCOUNT EXECUTIVE OR FRANCHISE CONSULTANT) SHALL BE INFORMED OF ALL MAJOR MILESTONES LEADING UP TO SITE START-UP. BP RESERVES THE RIGHT TO REQUEST COPIES OF INSPECTION REPORTS BEFORE INITIAL SITE START-UP.

7. AFTER DELIVERY OF THE FIRST LOAD OF PRODUCTS, EACH PRODUCT MUST BE TESTED AND THE RESULTS PROVIDED TO THE BP AREA MAINTENANCE MANAGER AND TO THE BP PROJECT MANAGER, PRIOR TO ANY SALE.

COSTS OF THE SAMPLING AND ANALYSIS ARE TO BE INCLUDED IN THE CONTRACTOR'S SCOPE OF WORK. A LABORATORY CERTIFIED TO CONDUCT FUELS SAMPLING AND TESTING MUST BE USED.

(20) TANK ELECTRICAL SPECIFICATIONS:

GENERAL:

ALL MATERIALS AND WORKMANSHIP WILL CONFORM TO THE MOST RECENT EDITIONS OF THE NATIONAL ELECTRICAL CODE, N.E.T.A., B.I.C.S.I., U.B.C. & NFPA AS REQUIRED BY THE ENGINEER, LOCAL AND STATE CODES AND ORDINANCES, AMERICANS WITH DISABILITIES ACT, E.P.A., AND UTILITY COMPANY REQUIREMENTS.

THE CONTRACTOR WILL VISIT THE JOB SITE AND FAMILIARIZE HIMSELF WITH ALL EXISTING CONDITIONS WHICH MAY AFFECT HIS BID OR WORK. NO ALLOWANCES WILL BE MADE AFTER THE BID FOR EXISTING CONDITIONS OR THE CONTRACTORS FAILURE TO VERIFY EXISTING CONDITIONS.

FURNISH AND INSTALL A COMPLETE ELECTRICAL SYSTEM AS DEPICTED FROM THE PLANS AND SPECIFICATIONS HEREIN - AS NOTED OR IMPLIED - NOT LIMITED TO WHAT IS SHOWN.

ALL DRAWINGS ARE SCHEMATIC IN NATURE AND ALL APPURTENANCES NOT INDICATED TO MAKE A WORKING SYSTEM MUST BE INCLUDED IN CONTRACTOR'S BID.

IF THERE APPEARS TO BE ANY ITEMS IN CONFLICT WITH THE DRAWINGS, INCONSISTENCIES WITH DESIGN OR INTENT, OR NEED FOR CLARIFICATION, IT IS THE CONTRACTOR'S RESPONSIBILITY TO CLARIFY THESE ITEMS PRIOR TO BID IN WRITING WITH THE ENGINEER. IF THE CONTRACTOR FAILS TO CLARIFY ANY QUESTIONS OR INCONSISTENCY, THEY ACCEPT RESPONSIBILITY TO CORRECT AT THEIR COST ANY SUCH ITEM SO AS TO MEET INTENT AS DEFINED BY ENGINEER.

UTILITIES:

CONTRACTOR WILL SUPPLY INFORMATION AS REQUIRED TO ALL SERVING UTILITIES IN A TIMELY MANNER TO PROVIDE SERVICE REQUIRED.

RSG FITTINGS & CONDUIT:

RGS FITTINGS MUST BE STEEL COMPRESSION TYPE; EACH WITH CODE SIZED COPPER BOND WIRE. MINIMUM CONDUIT 1" C. EXCEPT AS NOTED. ALL WORK WILL BE IN CONDUIT; COMPLETED SYSTEM REAMED, AND SWABBED PRIOR TO CONDUCTOR INSTALL.

ALL CONDUITS TO BE CONCEALED EXCEPT TO SURFACE MOUNTED PANELS TIE WIRE, PERFORATED STRAPS, OR OTHER PIPING OR CONDUIT ARE NOT ACCEPTABLE SUPPORTS. NO TIE WIRE WILL BE ALLOWED ON PROJECT.

CALIFORNIA VARIANT - THE LAST 2 FEET (MINIMUM) OF ALL CONDUITS THAT ARE ROUTED TO AND PENETRATE TANK SUMPS, DISPENSER SUMPS AND VENT TRANSITION SUMPS SHALL BE PVC COATED RIGID STEEL GALVANIZED WHERE PENETRATIONS TO THE BRINE FILLED SUMPS ARE MADE. ROBROY CONDUIT MUST BE USED WITH THE BRAVO PENETRATION FITTING - NO SUBSTITUTE PERMITTED.

CONDUCTORS:

CONDUCTORS TO BE 600V., COPPER (98% CONDUCTIVITY). BRANCH CIRCUITS TO HAVE THHN/THWN GAS & OIL RESISTANT INSULATION.

CONDUCTORS WILL BE STRANDED, HYDRAULIC CRIMP ALL CONNECTIONS. CONDUCTOR INSULATION WILL BE CONTINUOUSLY COLOR COATED.
ALL GROUNDING/BUILDING CONDUCTORS WILL BE MULTI-CONDUCTOR TYPE (U.L. LABELED - ROPE STRAND BUILDING WIRE CLASS 'M') BARE OR INSULATED AS NOTED OR REQUIRED.

MINIMUM LINE VOLTAGE WIRE SIZE IS #12 AWG (STRANDED) FOR LINE VOLTAGE WIRING DEVICES TO BE SPECIFICATION GRADE, MINIMUM 20 AMPS FOR RECEPTACLES. HUBBELL OR ENGINEER APPROVED. ALL SPECIAL RECEPTACLES AND GROUND FAULT PROTECTED DEVICES MUST BE PERMANENTLY MARKED WITH ENGRAVED COVER PLATES.

FILL RISER GROUNDING:

ALL RISERS IN THE FILL SUMP SHALL BE GROUNDED AND BONDED.

INSTALL 1/2" x 10'-0" LONG CONTINUOUS COPPER CLAD GROUND ROD IN NATIVE SOIL FOR TANK SYSTEM GROUNDING. PROVIDE MANHOLE ACCESS TO GROUND ROD AND COPPER GROUND WIRE, SEE DETAILS ON SHEET G.0.7

EMERGENCY SHUTDOWN:

ENSURE THAT THE E-STOP DISCONNECTS THE HOT AND NEUTRAL WIRES TO THE DISPENSERS
ENSURE THAT THE E-STOP DISCONNECTS THE HOT AND NEUTRAL WIRES TO THE TURBINES
ENSURE THAT THE TURBINE PUMPS ARE ISOLATED TO AVOID FEEDBACK VOLTAGE
ENSURE THAT THE E-STOP DISCONNECTS THE LOW VOLTAGE WIRES TO THE DISPENSER (I.E. DATA, INTERCOM, MEDIA)
ENSURE THAT THE TURBINE AND DISPENSER BREAKERS ARE CLEARLY IDENTIFIED / LABELED
ENSURE THAT EACH DISPENSER HAS ITS OWN DEDICATED CIRCUIT
ENSURE THAT EACH PUMP HAS ITS OWN DEDICATED CIRCUIT
ENSURE THAT THE DISPENSING EQUIPMENT IS GROUNDED PER NEC
ENSURE THAT ALL OF THE DISPENSING EQUIPMENT MEETS NEC LOCK OUT/TAG OUT CODES.

CONTRACTOR PERFORMANCE:

THE CONTRACTOR WILL GUARANTEE ALL MATERIALS AND WORKMANSHIP FURNISHED BY HIM UNDER THIS CONTRACTOR FOR A PERIOD OF TWO YEARS FROM THE DATE OF FINAL ACCEPTANCE OF THE WORK OF THIS CONTRACT BY THE OWNER AND THE ENGINEER AND PROVIDE A BOND TO VALIDATE THIS GUARANTEE. ANY DEFECTS DEVELOPING WITHIN THE PERIOD TRACEABLE TO MATERIALS OR WORKMANSHIP PERFORMED HERE UNDER, WILL BE MADE GOOD AT THE EXPENSE OF THE CONTRACTOR NOT THE OWNER OR ENGINEER. THE CONTRACTOR WILL ACCEPT AND FULLY UNDERSTAND THIS PROVISION PRIOR TO CONTRACT BEING AWARDED, AS NO CLAIM FOR EXTRA COMPENSATION WILL BE ALLOWED FOR CORRECTION OF FAULTY WORK OR DEFECTIVE MATERIALS. ANYTIME DURING THE CONSTRUCTION PERIOD, THE OWNERS REPRESENTATIVES AND THE ENGINEER RETAIN THE RIGHT TO REQUIRE THE CONTRACTOR TO REMOVE AND REINSTALL ANY EQUIPMENT OR MATERIALS NOT FOLLOWING THE STANDARDS AS PRESENTED HEREIN OR ON THE DRAWINGS WITHOUT COST TO THE OWNER OR ENGINEER.

CONTRACTOR WILL PROVIDE PROOF OF PERFORMANCE BOND WITH SHOP DRAWINGS

PROVIDE 3 SETS OF SHOP DRAWINGS & SAMPLES FOR ALL EQUIPMENT, PRIOR TO ORDERING AND IN A TIMELY MANNER (AS DETERMINED BY THE ENGINEER) SO NOT TO DELAY WORK, TO THE ENGINEER FOR APPROVAL. (CONDUIT, SWITCHES, CONDUCTORS, ECT.) WHERE SUBSTITUTIONS ARE MADE. CONTRACTOR WILL INCLUDE COMPARISON DATA & SAMPLES FOR BOTH THE SUBSTITUTE AND SPECIFIED ITEMS FOR REFERENCE PURPOSES.

CONTRACTOR WILL PROVIDE LETTER TO ENGINEER CONFIRMING ALL EQUIPMENT AND TERMINATIONS ARE PROPERLY TORQUED - SIGNED BY LICENSED CONTRACTOR.

CONTRACTOR WILL PROVIDE ACCURATE AND COMPLETE "AS BUILT" DRAWINGS TO OWNER AND ENGINEER AT TIME OF OWNER ACCEPTANCE. ALL "AS BUILT" DRAWINGS TO BE 4 SETS OF "BLUELINES" OR PHOTO COPY PRINTS 24" X 36" AND TWO SETS (OWNER/ENGINEER) ON MAGNETIC MEDIA & AUTOCAD 2010 (BY AUTODESK) COMPATIBLE. FAILURE TO DO SO WILL CONSTITUTE FORFEITURE OF ALL PAYMENTS DUE AND HOURLY RATES OR $99.00/HOUR/MAN MINIMUM TO ENGINEER PAID BY CONTRACTOR FOR "AS BUILT" DEVELOPMENT.

CLIENT:
bp
ARCO
BP WEST COAST PRODUCTS, LLC

Barghausen
Consulting Engineers, Inc.
18215 72nd Avenue South
Kent, WA 98032
425.251.6222
barghausen.com

NO.	DATE	REVISION DESCRIPTION
1	10/04/23	PERMIT RELEASE
2		
3		
4		
5		
6		
7		
8		
9		
10		
11		
12		

SEAL:
HAL P. GRUBB
STATE OF WASHINGTON
23975
REGISTERED PROFESSIONAL ENGINEER
10/4/2023

DEVELOPMENT INFORMATION:
ARCO NTI
3400 am/pm
FUEL CANOPY w/ 6 MPD's

SITE ADDRESS:
SWC S MERIDIAN
@ HIGHWAY 512
PUYALLUP, WASHINGTON

FACILITY #TBD

DESIGNED BY:	NP/RF	ALLIANCE Z&DM:	
CHECKED BY:	OV	BP REPM:	
DRAWN BY:	NP/RF	ALLIANCE PM:	
VERSION:	V-15.0 01/01/2023	PROJECT NO:	21730

DRAWING TITLE:
TANK AND PIPING
SCOPE OF WORK
AND GENERAL NOTES
(FRP 2 OF 2) TLS-450

SHEET NO:
G.0.2.2

P:\21000s\21730\mechanical\tanks\21730 G.0.2.1 & G.0.2.2.dwg 10/2/2023 1:25 PM NPHAN

PIPE TRENCH DETAIL

SCALE: NTS

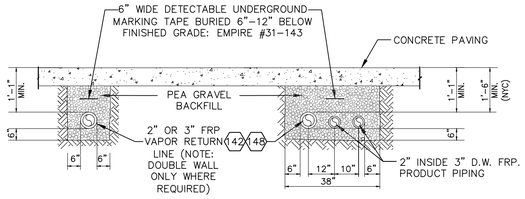

VAPOR RECOVERY IN SEPARATE TRENCH ALTERNATIVE

COMBINED VAPOR RECOVERY AND PRODUCT PIPING TRENCH

NOTE:
FOR ILLUSTRATION PURPOSES, A BLENDING GASOLINE OPTION IS SHOWN. FOR A COMBINED DIESEL OPTION, ADDITIONAL PIPING IS REQUIRED.

NOTE:
IN COMBINED TRENCH, MIN. 12" BETWEEN STAGE II & PRODUCT PIPING (C.L.)

XX NOTE:
INDICATES ITEMS FOUND ON MATERIALS LIST SHEETS

DISPENSER SUMP CROSSOVER PIPING DETAIL FOR FRP

SCALE: NTS

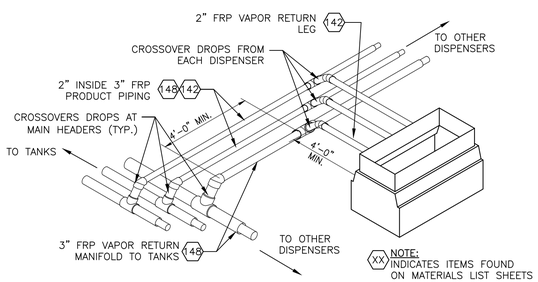

XX NOTE:
INDICATES ITEMS FOUND ON MATERIALS LIST SHEETS

ALTERNATE FIRE EXTINGUISHER FOR DISPENSER AREA INSTALLATION DETAILS

SCALE: 1" = 1'–0"

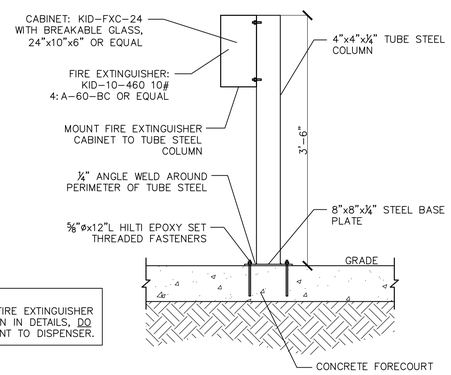

NOTE:
INSTALL FIRE EXTINGUISHER AS SHOWN IN DETAILS, DO NOT MOUNT TO DISPENSER.

STANDARD PIPE BOLLARD DETAIL – NFPA 30/30A

SCALE: 1" = 1'–0"

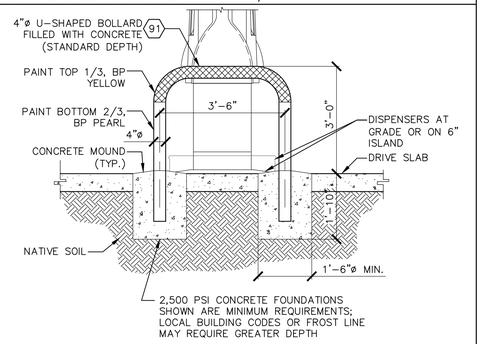

2012 NFPA 30A FIRE CODE SECTION 6.3.4 REQUIREMENTS FOR DISPENSING DEVICES: DISPENSING DEVICES SHALL BE MOUNTED ON A CONCRETE ISLAND OR SHALL BE OTHERWISE BE PROTECTED AGAINST COLLISION BY MEANS ACCEPTABLE TO THE AUTHORITY HAVING JURISDICTION.....

NOTE:
THIS BOLLARD AND FOUNDATION SATISFIES BOTH CONSTRAINED & NON–CONSTRAINED SOIL CONDITIONS. USE THIS DESIGN IN JURISDICTIONS THAT FOLLOW NFPA 30/30A.

NOTE: THIS DETAIL TO BE USED WHEN DISPENSERS ARE MOUNTED ON ISLANDS AND WHEN THE DISPENSER ISLANDS ARE 6 INCHES OR MORE IN HEIGHT

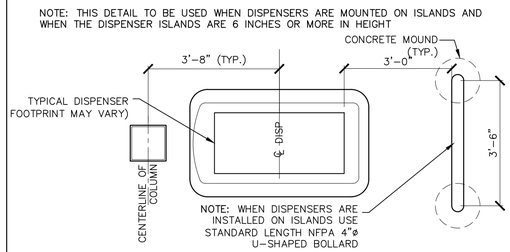

DISPENSERS ON ISLAND (SECONDARY CHOICE)

CLIENT:

bp

ARCO

BP WEST COAST PRODUCTS, LLC

Barghausen Consulting Engineers, Inc.

18215 72nd Avenue South
Kent, WA 98032
425.251.6222
barghausen.com

NO.	DATE	REVISION DESCRIPTION
1	10/04/23	PERMIT RELEASE
2		
3		
4		
5		
6		
7		
8		
9		
10		
11		
12		

SEAL:

HAL P. GRUBB — STATE OF WASHINGTON — 23975 — REGISTERED PROFESSIONAL ENGINEER

10/4/2023

DEVELOPMENT INFORMATION:

ARCO NTI

3400 am/pm FUEL CANOPY w/ 6 MPD's

SITE ADDRESS:

SWC S MERIDIAN

@ HIGHWAY 512
PUYALLUP, WASHINGTON

FACILITY #TBD

DESIGNED BY:	NP/RF	ALLIANCE Z&DM:	
CHECKED BY:	OV	BP REPM:	
DRAWN BY:	NP/RF	ALLIANCE PM:	
VERSION:	V-15.0 01/01/2023	PROJECT NO:	21730

DRAWING TITLE:

DESIGN INTENT MISCELLANEOUS DETAILS

SHEET NO:

G.0.5

P:\21000s\21730\mechanical\tanks\21730 G.0.5.dwg 10/2/2023 1:33 PM NPHAN

VENT RISER DETAILS (TYPICAL SINGLE WALL WITH (3) GAS TANKS)

SCALE: 1/2" = 1'-0"

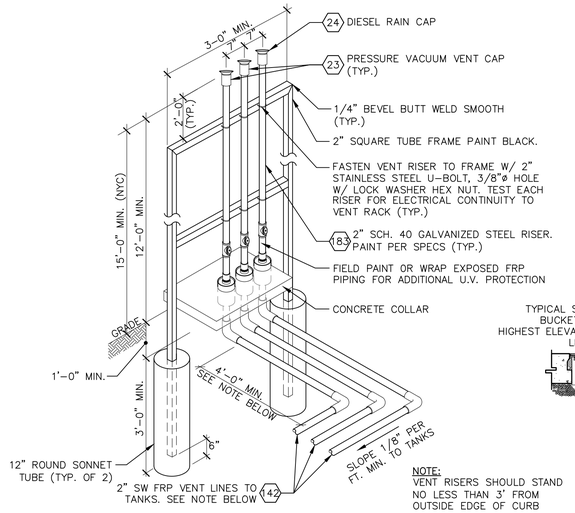

NOTE:
VENT RISERS SHOULD STAND NO LESS THAN 3' FROM OUTSIDE EDGE OF CURB

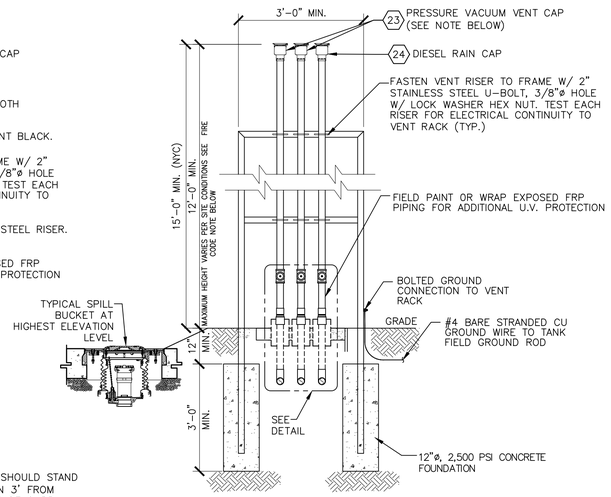

NOTES:
IN ORDER TO PROVIDE MECHANICAL FLEXIBILITY WITHIN THE RIGID PIPING SYSTEM, PROVIDE AT LEAST 4 FEET OF STRAIGHT PIPE RUN BEFORE A CHANGE IN DIRECTION OF 30 DEGREES OR MORE. [NFPA 30A (2012) §5.3.3(2)], [IFC (2015) §5703.6.9.1],[3 RCNY §3403.6.9.1], [CFC (2016) §5703.6.9.1].

THE VENT CONFIGURATION SHOWN IS IN ACCORDANCE WITH CP-201 THE NUMBER OF VENT CAPS AT ANY GDF SHALL NOT PERMIT AN ADDITIVE LEAK RATE OF MORE THAN .17 CHF AT 2" OF WATER COLUMN. MAX ALLOWED WITHOUT MANIFOLDING IS (3).

THE VENT DISCHARGE SHALL BE LOCATED SO THAT VAPORS ARE RELEASED AT A SAFE POINT OUTSIDE OF BUILDINGS AND NOT LESS THAN 12 FT (3.6 M) ABOVE THE ADJACENT GROUND LEVEL. VAPORS SHALL BE DISCHARGED UPWARD OR HORIZONTALLY AWAY FROM ADJACENT WALLS. VENT OUTLETS SHALL BE LOCATED SO THAT VAPORS WILL NOT BE TRAPPED BY EAVES OR OTHER OBSTRUCTIONS AND SHALL BE AT LEAST 5 FT (1.5 M) FROM BUILDING OPENINGS. VENTS SHALL BE INSTALLED IN ACCORDANCE WITH [NFPA 30 (2012) §5.7.2], [IFC (2015) §5704.2.7.3.3], [3 RCNY §2206.7.9.2.2.1], [CFC (2016) §5704.2.7.3.3].

IN NYC EACH UNDERGROUND MOTOR FUEL STORAGE TANK SHALL BE PROVIDED WITH A SEPARATE VENT LINE WITHOUT ANY TRAP OR DEVICE WHICH CAUSES EXCESSIVE BACK PRESSURE AND SHALL BE MAINTAINED UNOBSTRUCTED AT ALL TIMES. PER 3 RCNY §21-20 (1) (2)

VENT RISERS SHOULD STAND NO LESS THAN 3' FROM OUTSIDE EDGE OF CURB

THE ACTUAL NUMBER OF VENT RISERS IS DETERMINED BY THE NUMBER OF UNDERGROUND STORAGE TANKS. THE DIESEL VENT RISER IS ALWAYS SEPARATE.

IF AESTHETICS ARE NOT REQUIRED 2" ø PIPE OR 2" ANGLE MAY BE USED AS ALTERNATE FOR CONSTRUCTION OF VENT SUPPORT RACK.

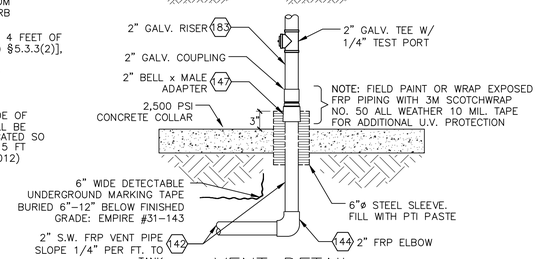

VENT DETAIL

CLIENT:

bp

ARCO

BP WEST COAST PRODUCTS, LLC

Barghausen Consulting Engineers, Inc.

18215 72nd Avenue South
Kent, WA 98032
425.251.6222
barghausen.com

NO.	DATE	REVISION DESCRIPTION
1	10/04/23	PERMIT RELEASE
2		
3		
4		
5		
6		
7		
8		
9		
10		
11		
12		

SEAL:

HAL P. GRUBB
STATE OF WASHINGTON
23975
REGISTERED
PROFESSIONAL ENGINEER

10/4/2023

DEVELOPMENT INFORMATION:

ARCO NTI

3400 am/pm
FUEL CANOPY w/ 6 MPD's

SITE ADDRESS:

SWC S MERIDIAN
@ HIGHWAY 512
PUYALLUP, WASHINGTON

FACILITY #TBD

DESIGNED BY:	NP/RF	ALLIANCE ZAOM:	
CHECKED BY:	OV	BP REPM:	
DRAWN BY:	NP/RF	ALLIANCE PM:	
VERSION:	V-15.0 01/01/2023	PROJECT NO:	21730

DRAWING TITLE:

DESIGN INTENT
VENT STACK
INSTALLATION DETAILS
(STANDARD)

SHEET NO:

G.0.6.1

P:\21000s\21730\mechanical\tanks\21730 G.0.6.1.dwg 10/3/2023 1:10 PM NPHAN

EQUIPMENT SCHEDULE

ITEM NO.	DESCRIPTION
1	5/8" ø X 10' LONG COPPERBONDED GROUND ROD: "ERITECH" PART NO. 615800 (UL LISTED) OR EQUIVALENT
2	#4 AWG STRANDED BARE COPPER GROUND WIRE. "ERITECT" PART NO. A809A01F100 OR EQUIVALENT
3	CADWELD #4 WIRE CABLE TO GROUND ROD CONNECTION "THERMOWELD" PART NO. M-2109 (4 WIRE CONNECTION), USE WELD METAL #65
4	CADWELD "T" CONNECTION FOR #4 BARE STRANDED WIRE CABLES. "THERMOWELD" PART NO. M-221, USE #32 WELD METAL.
5	CADWELD "CABLE TO VERTICAL STEEL" CONNECTION FOR #4 BARE STRANDED WIRE CABLES TO 4" RISER PIPE. "THERMOWELD" PART NO. M-190, USE #25CP WELD METAL.
6	4" NPT ADJUSTABLE COPPER GROUND CLAMPS, BURNDY GAR224C 4AWG GROUND CONNECTOR
7	OPW 104A-1200WT 12" H-20 RATED, BOLT DOWN WATER TIGHT ACCESS COVER (USED IN DRIVE AREAS) OPW 104A-1200 12" H-20 RATED, GRAVITY LID ACCESS COVER (USED IN PLANTER AREAS)
8	3/4" DIAMETER x 12" LONG SOLID BRONZE ROD.
9	3/4" SINGLE WALL ENTRY FITTING "BRAVO" MODEL NO. F-07S-0-F ADHESIVE- EP100 2 NEEDED PER PENETRATION

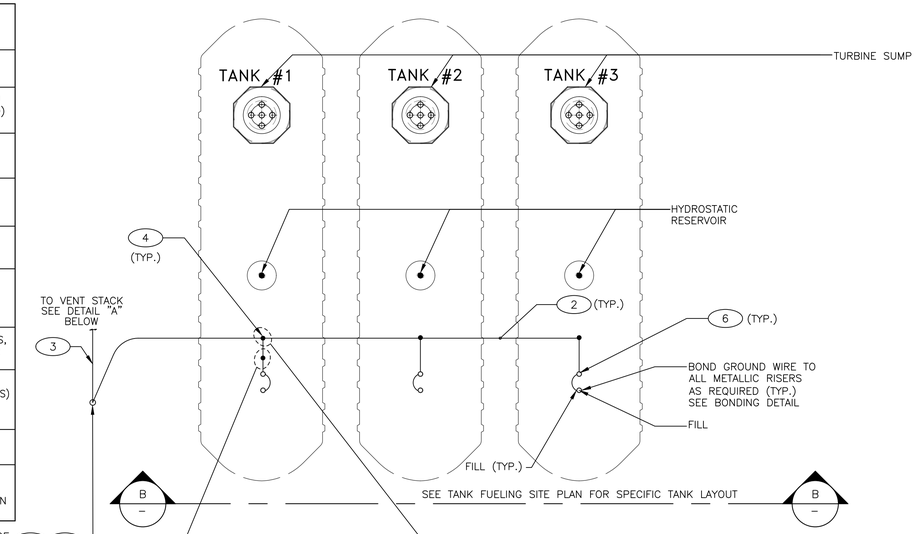

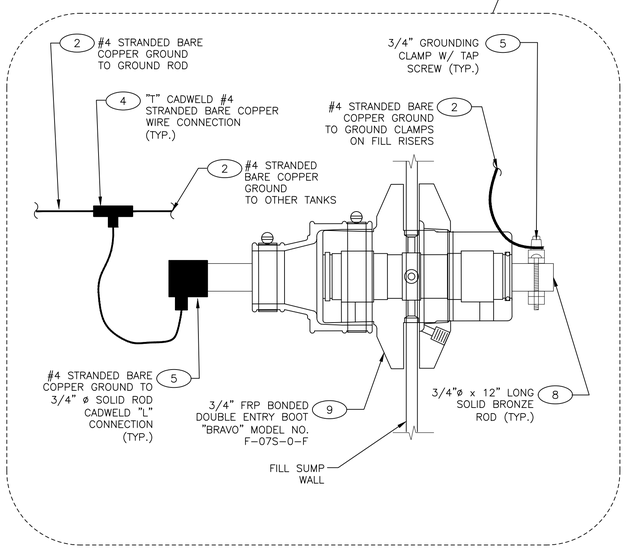

A: STATIC GROUNDING PLAN VIEW & BONDING DETAILS

SCALE: NONE

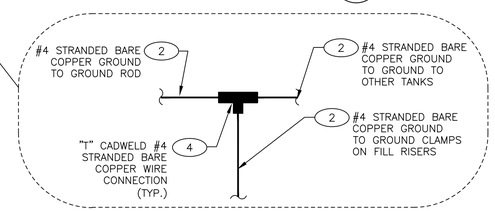

TYPICAL CONNECTION DETAIL
(SEE INSTALLATION SEQUENCE NOTES THIS SHEET)

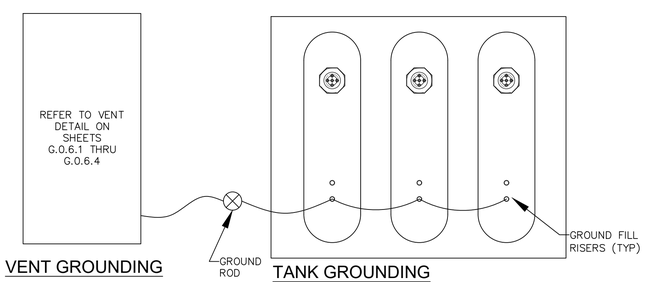

VENT GROUNDING

TANK GROUNDING

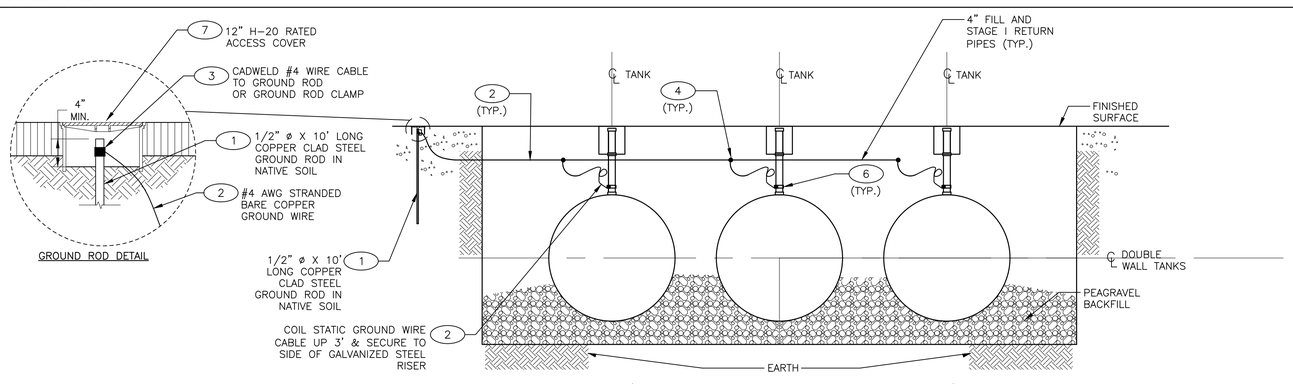

B: STATIC GROUNDING SECTION & BONDING DETAILS

SCALE: NONE

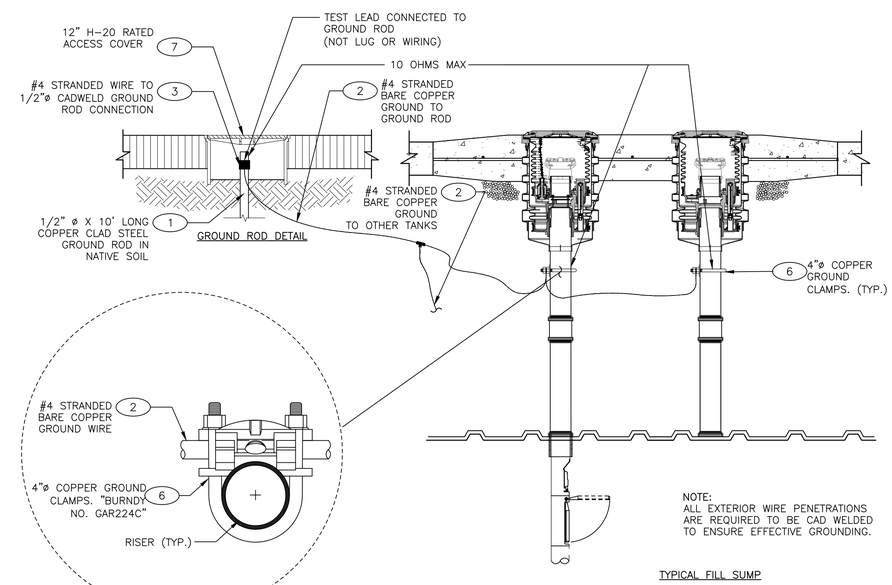

GROUND CLAMP AT FILL SUMP

! EXTREME CAUTION MUST BE OBSERVED WHILE USING ANY NON-INTRINSICALLY SAFE DEVICE IN CLASSIFIED AREAS. SUMP MUST BE TESTED FOR VOLATILE VAPORS PRIOR TO USE. ELECTRICAL CONNECT MUST BE MADE WITH JUMPER WIRE SO FINAL CONNECTION IS AWAY FROM CLASSIFIED AREAS. !

C: TESTING EXPOSED GROUND SYSTEM & BONDING DETAILS

SCALE: NONE

GENERAL SHEET NOTES

NOTES:

ALL STAGE I FILL AND VAPOR RISER ADAPTERS SHALL BE ELECTRICALLY GROUNDED TO PROMOTE THE RELAXATION OF STATIC CHARGE.

THE BONDING AND GROUNDING FOR STATIC ELECTRICITY PROTECTION SHALL BE IN COMPLIANCE PER ALL APPLICABLE FEDERAL, STATE AND LOCAL CODES INCLUDING NFPA 30, FLAMMABLE AND COMBUSTIBLE LIQUIDS CODE, NFPA 77, RECOMMENDED PRACTICE ON STATIC ELECTRICITY, NFPA 70, NATIONAL ELECTRIC CODE, AND THE CALIFORNIA CODE OF REGULATIONS, SUBCHAPTER 15, PETROLEUM SAFETY ORDERS-REFINING, TRANSPORTATION AND HANDLING, ARTICLE 5, FIRE AND EXPLOSIONS.

PER SECTION 6.4.1.3 OF NFPA 77, THE MEASURED TOTAL RESISTANCE IN THE GROUND PATH TO EARTH SHALL BE LESS THAN 1 MEGAOHM WHICH IS CONSIDERED ADEQUATE FOR RELAXATION OF STATIC CHARGE. THE MAXIMUM ALLOWABLE GROUND PATH TO EARTH RESISTANCE FOR STATIC ELECTRICITY GROUNDING APPLICATIONS SHALL NOT EXCEED 100,000 OHMS.

PER SECTION 6.4.1.3 OF NFPA 77, THE RESISTANCE IN METALLIC BONDING AND OR GROUNDING SYSTEMS SHALL BE LESS THAN 10 OHMS. RESISTANCE HIGHER THAN 10 OHMS INDICATES INADEQUATE CONNECTIONS.

A GROUNDING SYSTEM PER NEC CODE FOR CURRENT CARRYING CONDUCTORS SHALL BE CONSIDERED MORE THAN ADEQUATE FOR A STATIC ELECTRICITY GROUNDING SYSTEM.

PER THE NFPA 30, SECTION 5-6.3.4 ALL PARTS OF THE FILL PIPE ASSEMBLY, INCLUDING THE DROP TUBE, SHALL FORM A CONTINUOUS ELECTRICALLY CONDUCTIVE PATH.

THE MINIMUM WIRE SIZE FOR BONDING AND GROUNDING SHALL BE COPPER AWG #4

A 1/2" ø BY 10' LONG COPPER CLAD STEEL GROUND ROD SHALL BE DRIVEN INTO NATIVE SOIL ONLY. PLACING THE GROUND ROD INTO TANK PIT PEA GRAVEL SHALL NOT BE PERMITTED UNDER ANY CONDITIONS. THE CONTRACTOR IS RESPONSIBLE FOR CLEARING ANY UNDERGROUND UTILITIES PRIOR TO INSTALLATION OF THE GROUND.

THE GROUND ROD TO GROUND WIRE CONNECTION SHALL BE ACCESSIBLE THROUGH A H-20 RATED 12" DIAMETER MINIMUM ACCESS COVER TO ASSIST INSPECTION, MAINTENANCE AND TESTING. THE SCREW TYPE GROUND ROD CLAMP SHALL BE UL LISTED FOR DIRECT BURIAL.

ONE MAIN STRANDED #4 THHN CONDUCTOR SHALL BE RUN PAST EACH FILL RISER. ONE STRANDED #4 THHN CONDUCTOR SHALL BE ROUTED FROM EACH FILL AND STAGE I RISER. INSTALLATION SHALL BE AS FOLLOWS AND MUST BE COMPLETED IN ORDER NOTED AS FOLLOWS:

OUT OF HOLE INSTALLATION SEQUENCE:

NOTE:
ALL CAD WELDS W/ EXCEPTION OF "T" CONNECTIONS AT EACH TANK AND FINAL CAD WELD @ GROUND ROD NOTED IN SCHEDULE ON THIS SHEET MAY BE PREFABRICATED OUTSIDE THE TANK AREA AND BROUGHT TO SITE.

1. MAKE "CABLE TO PIPING STEEL SURFACE" CADWELD CONNECTION CONNECTION WITH #4 STRANDED WIRE TO EACH FILL AND STAGE I RISER OUTSIDE THE SUMP AREA. TO ASSURE A COMPLETE CONNECTION, ANY PAINT OR COATING ON THE RISER SHALL BE REMOVED PRIOR TO INSTALLATION OF THE CADWELD CONNECTION.
2. APPLY "THERMOCAP" CATHODIC PROTECTION TO EACH OF THE CADWELDS ON RISERS.
3. FOR EACH TANK RISER MAKE #4 STRANDED TO #4 STRANDED "T" CADWELD CONNECTIONS TO MAIN GROUND WIRE BACK TO GROUND ROD. THE CONDUCTORS SHALL HAVE 18" MINIMUM COVER. EACH TANK SHALL HAVE SEPARATE GROUND WIRE TO GROUND ROD
3. MAKE #4 STRANDED WIRE TO GROUND ROD CADWELD CONNECTION. CADWELD CONNECTION MODEL NUMBER PER NUMBER OF TANKS.

NOTE:
ELECTRICAL CONDUIT, FUELING SYSTEM HARDWARE OR THE STATION ELECTRICAL GROUNDING SYSTEM SHALL NOT BE USED FOR GROUNDING OR BONDING FILL AND VAPOR RISERS.

TESTING:

CAUTION: AVOID CONNECTING ANY ELECTRICAL TEST LEAD TO THE FILL OR VAPOR RISER IN A MANNER THAT WOULD POTENTIALLY PRODUCE STATIC DISCHARGE OR SPARKS OF ANY KIND.

THE FILL AND VAPOR RISERS SHALL BE TESTED AFTER INSTALLATION AND PERIODICALLY TO VERIFY BONDING AND GROUNDING COMPETENCY.

THE MAXIMUM RESISTANCE FROM ANY FILL OR VAPOR ADAPTER TO THE BODY OF THE GROUND ROD SHALL NOT EXCEED 10 OHMS FOR A METALLIC RISER PIPE, SPILL CONTAINMENT AND ADAPTER ASSEMBLIES.

THE RESISTANCE THROUGH ANY COMPOSITE OR NONMETALLIC STAGE I CONTAINMENT FITTING SHALL BE MEASURED WITH A OHMMETER CAPABLE OF READING UP TO 10 MEGAOHMS. THE SUM COLLECTIVE RESISTANCE OF THESE SEMI-CONDUCTIVE ELEMENTS SHALL NOT EXCEED 100,000 OHMS. FOR THESE SYSTEMS, THE GROUND RESISTANCE TESTER MUST BE CONNECTED TO THE GROUND CONDUCTOR CONNECTION ON THE COMPOSITE CONTAINMENT SYSTEM OR RISER PIPE.

FOR INSTALLATIONS WITHOUT AN EXPOSED GROUND ROD CONNECTION, TOTAL SYSTEM RESISTANCE SHALL BE MEASURED WITH A GROUND RESISTANCE TESTER BY A QUALIFIED ELECTRICIAN FAMILIAR WITH GROUND TESTING. THE TWO POINT METHOD MAY BE USED WITH THE SITE ELECTRICAL GROUNDING AS THE SECOND TEST POINT.

THE NEC MAXIMUM GROUND PATH RESISTANCE FOR CURRENT CARRYING APPLICATIONS IS 25 OHMS. HOWEVER, GROUND ROD TO EARTH RESISTANCE UP TO 100 OHMS SHALL BE ACCEPTABLE FOR STATIC ELECTRICITY PROTECTION OF THE FILL AND VAPOR RISERS.

GROUNDING OHMS NOTE:

TEST GROUNDING IMPEDANCE AT THE FILL RISERS. GROUNDING IMPEDANCE SHALL BE BELOW 25 OHMS PER CURRENT NEC CODE. IF IMPEDANCE IS OVER 25 OHMS, PLACE ANOTHER GROUND ROD A MINIMUM 10 FEET AWAY FROM THE FIRST GROUND ROD AND TIE THE RODS TOGETHER WITH SAME WIRE SIZE AND CONNECTIONS. MAKE SURE GROUND ROD IS INSTALLED INTO NATIVE SOIL.

CLIENT:

bp

ARCO
BP WEST COAST PRODUCTS, LLC

Barghausen Consulting Engineers, Inc.
18215 72nd Avenue South
Kent, WA 98032
425.251.6222
barghausen.com

NO.	DATE	REVISION DESCRIPTION
1	10/04/23	PERMIT RELEASE
2		
3		
4		
5		
6		
7		
8		
9		
10		
11		
12		

SEAL:

HAL P. GRUBB — STATE OF WASHINGTON — 23975 — REGISTERED PROFESSIONAL ENGINEER
10/4/2023

DEVELOPMENT INFORMATION:
ARCO NTI
3400 am/pm FUEL CANOPY w/ 6 MPD's

SITE ADDRESS:
SWC S MERIDIAN
@ HIGHWAY 512
PUYALLUP, WASHINGTON

FACILITY #TBD

DESIGNED BY:	NP/RF	ALLIANCE ZADM:	
CHECKED BY:	OV	BP REPM:	
DRAWN BY:	NP/RF	ALLIANCE PM:	
VERSION:	V-15.0 01/01/2023	PROJECT NO:	21730

DRAWING TITLE:
TANK FILL AND VAPOR RISER STATIC GROUNDING DETAIL (STANDARD)

SHEET NO:
G.0.7.1

P:\21000s\21730\mechanical\tank\21730 G.0.7.1.dwg 10/2/2023 3:58 PM NPHAN

TANKS

ITEM	BY	DESCRIPTION (BP CORE CONFIGURATIONS)	MANUFACTURER
11	BP	TANK: 12,000,10,000 GALLON, 10' DIA. NOMINAL DOUBLE WALL FIBERGLASS TANK, (w/ (2) 42" 8-SIDED TURBINE SUMPS SINGLE STP DESIGN, STEEL STRIKE PLATES AND TIE DOWN GUIDES. TANK SHALL BE UL 1316 APPROVED AND METHANOL APPROVED. (CORE DESIGN)	"CONTAINMENT SOLUTIONS" MODEL NO. DWT-6 TYPE II; (10) 12,000/10,000 GAL. w/ HYDROSTATIC RESERVOIR, w/ SINGLE WALL SUMP PKG. AS REQUIRED, w/ DEADMEN PKG. AS REQUIRED CSI-PRODUCT CODE XWDCSD303
13	BP	TANK: 25,000 GALLON, 10' DIA. NOMINAL DOUBLE WALL FIBERGLASS TANK, (w/42" 8-SIDED TURBINE SUMPS SINGLE STP DESIGN, OR 48" 8-SIDED TURBINE SUMP WITH 2 STP DESIGN w/ 22" MW), STEEL STRIKE PLATES AND TIE DOWN GUIDES. TANK SHALL BE UL 1316 APPROVED AND METHANOL APPROVED. (CORE DESIGN SIDE BY SIDE FILL)	"CONTAINMENT SOLUTIONS" MODEL NO. DWT-6 TYPE II; (10) 25,000 GALLON w/ HYDROSTATIC RESERVOIR, w/ SINGLE WALL SUMP PKG. AS REQUIRED, w/ DEADMEN PKG. AS REQUIRED CSI-PRODUCT CODE XW25SD131(42" SUMP) CSI-PRODUCT CODE XW25SD144(48" SUMP)

STAGE I EQUIPMENT - (ALL AREAS)

ITEM	BY	DESCRIPTION	MANUFACTURER
19	BP	4"x4"x3"x2" EXTRACTOR CROSS FITTING W/ CAGE.	"OPW" MODEL NO. 233-4432
20	BP	4"x4"x2" EXTRACTOR TEE FITTING W/ CAGE	"OPW" MODEL NO. 233-4420
21			"OPW" MODEL NO. 723V-2203
22	BP	4" GALVANIZED RISER - LENGTH AS REQUIRED	"ANVIL" OR EQUAL
23	BP	2" PRESSURE VACUUM VENT-(GASOLINE)	"OPW" MODEL NO. 723V-2203
24	BP	DIESEL VENT CAP	"OPW" MODEL NO. 23-0033
25	G.C.	PRODUCT IDENTIFICATION MARKERS	"OPW" MODEL NO. 1TAG-1000 & 1TAG-1010 (UNLEADED) 1TAG-3000 & 1TAG-3010 (PREMIUM) 1TAG-4200 & 1TAG-4210 (ULTRA LOW DIESEL)

STAGE I EQUIPMENT - (STANDARD OPW SOLUTION)

ITEM	BY	DESCRIPTION	MANUFACTURER
28	BP	"EDGE" DIRECT-BURY 5-GALLON REPLACEABLE DOUBLE WALL FILL SIDE SPILL BUCKET CAST IRON BASE WITH SEALABLE COVER WITH PLUG & INSTALLATION TOOL	"OPW" MODEL NO. 1C-3112P "OPW" MODEL NO. 61SA-TOOL
31	BP	FILL SWIVEL ADAPTOR - PER CARB EVR EXEC ORDER VR-102	"OPW" MODEL NO. 61SALP-1020-EVR
32	BP	PRODUCT TOP SEAL FILL CAP - PER CARB EVR EXEC ORDER VR-102	"OPW" MODEL NO. 634TT-7085-EVR
33	BP	VAPOR RECOVERY SWIVEL ADAPTOR - PER CARB EVR EXEC ORDER VR-102	"OPW" MODEL NO. 61VSA-1020-EVR
34	BP	VAPOR TOP SEAL CAP - PER CARB EVR EXEC ORDER VR-102	"OPW" MODEL NO. 1711T-7085-EVR
35	BP	4"x13' DROP TUBE W/ OVERFILL PREVENTION VALVE 4"x19.5' DROP TUBE W/ OVERFILL PREVENTION VALVE W/ JACK SCREW LOCK DOWN DEVICE W/ FACE SEAL ADAPTER (NOT NEEDED FOR "EDGE 1" SPILL BUCKETS) W/ TANK BOTTOM PROTECTOR W/ INSTALLATION TOOL - PER CARB EVR EXEC ORDER VR-102	"OPW" MODEL NO. OPW-71SO-4000-EVR "OPW" MODEL NO. OPW-71SO-4100-EVR "OPW" MODEL NO. 61JSK-44CB-EVR "OPW" MODEL NO. FSA-400 "OPW" MODEL NO. 6111-1400 "OPW" MODEL NO. 71SA-TOOLC

DISPENSERS

CONTACT DRESSER WAYNE AGENT TO ENSURE THAT DISPENSERS ARE ORDERED WITH THE CORRECT PCI/TRIPLE DES POS EQUIPMENT FOR MARKET

ITEM	BY	DESCRIPTION (BLENDERS)	MANUFACTURER
51	BP	"OVATION" H-FRAME BLENDING MULTI-PRODUCT DISPENSER: 3-GRADE, 2-SIDED, 1 HOSE PER SIDE, w/ CARD READER. CONFIGURED AS REQUIRED FOR SITE SPECIFIC CONDITIONS AND MARKETS. FOR GASOLINE ONLY	"WAYNE" OVATION SERIES MODEL NO. B12/322XD6/K/N (3+0 GASOLINE ONLY) "X"=1 BALANCE
52	BP	"OVATION" H-FRAME BLENDING MULTI-PRODUCT DISPENSER: 4-GRADE, 2-SIDED, 2 HOSE PER SIDE, w/ CARD READER. CONFIGURED AS REQUIRED FOR SITE SPECIFIC CONDITIONS AND MARKETS. FOR GASOLINE & AUTO DIESEL	"WAYNE" OVATION SERIES MODEL NO. B23/422XD6/K/N (3+1 GASOLINE/DIESEL) "X"=1 BALANCE

EQUIPMENT SOLUTION FOR CARB LISTED ORVR "BALANCE" AREAS

ITEM	BY	DESCRIPTION	MANUFACTURER
61	BP	G2 BLACK EVR BALANCE SYSTEM NOZZLE	"VST" MODEL # VST-EVR-NB-2
62	BP	SWIVEL (INCORPORATED INTO VST HOSE DESIGN)	
63	BP	8 FOOT ENVIRO-LOC EVR BALANCE VAPOR RECOVERY HOSE WITH VENTURI	"VST" MODEL NO. VDV-EVR-096
64	BP	BALANCE COAXIAL FUEL WHIP HOSE 12" LONG BALANCE COAXIAL FUEL WHIP HOSE 5' LONG FOR SITE USING RETRACTORS/LAZY "J" STYLE	"VST"MODEL NO. VSTA-EVR-012 "VST"MODEL NO. VSTA-EVR-060
65	BP	COAXIAL BREAKAWAY VALVE - NON REUSABLE	"VST" MODEL # VSTA-EVR-SBK
66	BP	INCLUDE SAFETY BREAKAWAY SCUFF GUARD	"VST" MODEL # VSTA-BBSG-100

EQUIPMENT SOLUTION FOR DIESEL DISPENSING (ALL AREAS)

ITEM	BY	DESCRIPTION	MANUFACTURER
70	BP	DIESEL PRESSURE-SENSING AUTOMATIC PREPAY NOZZLE WITH 3/4 INCH NPT INLET 2-PIECE HAND INSULATOR ALUMINUM SPOUT AND 2-POSITION HOLD-OPEN RACK. UL 2586 LISTED. WITH NOZZLE FILLGARD SPLASH GUARD	"OPW" MODEL NO. 11B-0400-BLACK "OPW" MODEL NO. 8BL-0400-BLACK (BP/AMOCO)
			"OPW" MODEL NO.11B-0100-GREEN "OPW" MODEL NO. 8G-0100-GREEN (THORNTONS/ARCO)
71	BP	DIESEL 3/4 INCH MALE X 3/4 INCH FEMALE TWO PLANE SWIVEL	"OPW" MODEL NO. 241TPS-0241 (BP/AMOCO/ARCO)
72	BP	DIESEL FUEL HOSE 5/8 INCH X 8 FOOT BLACK HARDWALL HOSE 3/4 INCH MALE SWIVEL X MALE SWIVEL ENDS. UL330 AND ULC LISTED.	"SOURCE" MODEL NO. GY5/8X8MSXMS (BP/AMOCO/ARCO)
73	BP	DIESEL 5/8 INCH X 12 INCH BLACK HARDWALL WHIP HOSE 3/4 INCH MALE X MALE SWIVEL ENDS. UL330 AND ULC LISTED.	"SOURCE" MODEL NO. GY5/8X1MXMSWHIP (BP/AMOCO/ARCO)
74	BP	DIESEL 3/4 INCH RECONNECTABLE BREAKAWAY	"OPW" MODEL # 66REC-1000 (BP/AMOCO/ARCO)
75	BP	DIESEL FILTER	"CIMTEK" MODEL NO. 260-HS-10 (BP/ARCO)

NOTE: THIS MATERIALS EQUIPMENT SCHEDULE IS NOT A COMPLETE LIST OF MATERIALS. CONTRACTOR IS RESPONSIBLE FOR PROVIDING AND INSTALLING ALL MISCELLANEOUS EQUIPMENT, FITTINGS, MATERIALS AND DEVICES NECESSARY TO PROVIDE A COMPLETE AND OPERABLE SYSTEM. CONTRACTOR TO COORDINATE MATERIALS DELIVERY SCHEDULE AND VERIFY EQUIPMENT COUNTS. CONTRACTOR IS RESPONSIBLE FOR VERIFYING THAT ALL EQUIPMENT ARRIVES AT SITE IN UNDAMAGED CONDITION.

CLIENT:

bp

ARCO

BP WEST COAST PRODUCTS, LLC

Barghausen Consulting Engineers, Inc.

18215 72nd Avenue South
Kent, WA 98032
425.251.6222
barghausen.com

NO.	DATE	REVISION DESCRIPTION
1	10/04/23	PERMIT RELEASE
2		
3		
4		
5		
6		
7		
8		
9		
10		
11		
12		

SEAL:

HAL P. GRUBB
STATE OF WASHINGTON
23975
REGISTERED
PROFESSIONAL ENGINEER

10/4/2023

DEVELOPMENT INFORMATION:

ARCO NTI

3400 am/pm FUEL CANOPY w/ 6 MPD's

SITE ADDRESS:

SWC S MERIDIAN

@ HIGHWAY 512
PUYALLUP, WASHINGTON

FACILITY #TBD

DESIGNED BY:	NP/RF	ALLIANCE ZAOM:	
CHECKED BY:	OV	BP REPM:	
DRAWN BY:	NP/RF	ALLIANCE PM:	
VERSION:	V-15.0 01/01/2023	PROJECT NO:	21730

DRAWING TITLE:

TANK AND PIPING MATERIALS LIST (1 OF 2)

SHEET NO:

M.5.1.01

P:\21000s\21730\mechanical\tanks\21730 M.5.1.01 and M.5.1.02.dwg 10/2/2023 3:49 PM NPHAN

OTHER EQUIPMENT AT DISPENSERS (ALL AREAS)

ITEM	BY	DESCRIPTION	MANUFACTURER
81	BP	1-1/2" PRODUCT IMPACT VALVE DOUBLE POPPET W/ FUSIBLE LINK W/ U-BOLT INSTALLATION KIT	"OPW" MODEL NO. OPW-10P-0152 "OPW" MODEL NO. OPW-10P-0152EB5
82	BP	VAPOR RECOVERY IMPACT VALVE (TOP ENTRY)	"OPW" MODEL NO. 60 VSP-1001
83		(NOT USED)	
84	BP	UNDER DISPENSER SPILL CONTAINMENT SUMP FOR "WAYNE OVATION" GASOLINE DISPENSERS (SINGLE WALL FRP) (CONTRACTOR TO PLUMB ALL FITTINGS) - SHEAR VALVE PLATES INCLUDED AND STABILIZER BRACKET	"BRAVO" MODEL # B9250-S36 "BRAVO" MODEL # BK-8000
85		(NOT USED)	
86		(NOT USED)	
87		(NOT USED)	
88		(NOT USED)	
89		(NOT USED)	
90		ISLAND FORM FOR H-FRAME DISPENSERS (NOTE ISLAND FORMS USED ONLY WHERE REQUIRED BY LOCAL JURISDICTION) 5'-0"x3'-0" (STANDARD) 7'-6"x3'-0" (FOR COLUMN WRAP) (REFER TO SPECIFIC MARKET REQUIREMENTS W/ BP PM BEFORE ORDERING)	"OPW" OR EQUAL BP ISLAND FORM
91	BP	42"x84"x4"ø SCH. 40 DISPENSER ISLAND TRAFFIC BOLLARD W/SIGN MOUNTS (OR) 42"x104"x4"ø SCH. 40 DISPENSER ISLAND TRAFFIC BOLLARD W/SIGN MOUNTS (OR) 72"x6"ø STRAIGHT PIPE BOLLARD (CA ISLANDLESS SOLUTION ONLY)	"RIVERSIDE STEEL" OR EQUAL BP TRAFFIC BOLLARD

MANHOLES (ALL AREAS)

ITEM	BY	DESCRIPTION	MANUFACTURER
101	BP	12" DIA. ROUND MONITORING MANHOLE, WATER TIGHT AND TRAFFIC RATED WITH IDENTIFICATION TRIANGLE	"OPW" MODEL NO. 104AOW-1200 (BOLT DOWN & WATER TIGHT)
102	BP	18" DIA. ROUND MANHOLE, BOLT DOWN, WATER TIGHT AND TRAFFIC RATED	"OPW" 104A-1800WT (BOLT DOWN & WATER TIGHT)
103	BP	42"/45" DIA. ROUND COMPOSITE MANHOLE, WATER TIGHT GASKET. TRAFFIC RATED W/ STICK LIFT KEY PLATE & STICK LIFT ASSEMBLY (AT DUAL TURBINES ONLY)	"EBW" MODEL NO. 78144313GRY W/ SLIDE ACTION HANDLE (1 ONLY PER SITE)
104	BP	40" COMPOSITE MANHOLEWATER TIGHT GASKET. TRAFFIC RATED W/ STICK LIFT KEY PLATE & STICK LIFT ASSEMBLY (AT TURBINES)	"FIBRELITE" 40" HEAVY DUTY FLAT SEALED COMPOSITE COVER WITH COMPOSITE FRAME MODEL # FL100GRAY-HD-SK12 W/LIFTING HANDLE MODEL # FL7A (1 ONLY PER SITE) OR "EBW" MODEL # 781-485-12GRY W/ SLIDE ACTION HANDLE (1 ONLY PER SITE)

TURBINES (ALL AREAS)

ITEM	BY	DESCRIPTION	MANUFACTURER
105	BP	VARIABLE SPEED SUBMERSIBLE TURBINE PUMPS -2 H.P. W/O PISTON LEAK DETECTION, W/ MAGVFC CONTROLLER PANEL. 208/230V, W/ 26" RISER, W/ "R" CHECK VALVE ADVANCED PROTECTION E-COATED FINISHED 2 H.P. VARIABLE SPEED "AG" PUMPS, SUITABLE FOR ALL DIESEL BLENDS AND ALL ETHANOL BLENDS 3/4 H.P. VARIABLE SPEED SUBMERSIBLE TURBINE FOR SINGLE DISPENSER USE	GASOLINE MODELS "FE PETRO" MODEL NO. FE-IST-2R (89" to 151") "FE PETRO" MODEL NO. FE-IST-3R (121" to 214") ——— DIESEL AND FLEXFUEL MODELS ——— "FE PETRO" MODEL NO. FE-IST-AP-2R (89" TO 151") "FE PETRO" MODEL NO. FE-IST-AP-3R (121" TO 214") "FE PETRO" MODEL NO. FE-STP-AP-75-VLZ-R (89" TO 151")
106		(NOT USED)	
107	BP	SIPHON CHECK VALVE FOR TURBINE PUMP (ALL TURBINES)	"FE PETRO" MODEL NO. 400137908
108	BP	65 PSI CHECK VALVE (FOR SLAVE TURBINE ONLY)	"FE PETRO" MODEL NO. 402459931
109		(NOT USED)	

MISCELLANEOUS TRANSITION SUMPS

ITEM	BY	DESCRIPTION	MANUFACTURER
111		(NOT USED)	
112	BP	VENT TRANSITION CONTAINMENT SUMP AND VENT RACK (SINGLE WALL FRP) (CONTRACTOR TO PLUMB ALL FITTINGS)	"BRAVO" MODEL NO. B501-S-222 (3 RISERS) "BRAVO" MODEL NO. B501-S-22220(4 RISERS) ORDER W/ EO-EBS ELECTRICAL OFFSET ORDER W/ RS-501 SUPPORT RACK (3 RISER) ORDER W/ RS-503 SUPPORT RACK (4 RISER)

PENETRATION FITTINGS (ALL AREAS - DESIGNER TO CONFIRM WITH BP PM FITTINGS TO BE USED)

120	BP	1" CONDUIT ENTRY FITTING	"BRAVO" MODEL NO. F-10S-0-F WITH EP100 ADHESIVE AS NEEDED
121	BP	2" SINGLE WALL FRP BONDED PENETRATION FITTING (SW FRP PIPING)	"NOV FIBERGLASS SYSTEMS" RED THREAD 11A MODEL NO. 012020-622-0
122	BP	3" SINGLE WALL FRP BONDED PENETRATION FITTING (SW FRP PIPING)	"NOV FIBERGLASS SYSTEMS" RED THREAD 11A MODEL NO. 012030-622-0
123	BP	4" SINGLE WALL FRP BONDED PENETRATION FITTING (SW FRP PIPING ONLY WHEN REQUIRED)	"NOV FIBERGLASS SYSTEMS" RED THREAD 11A MODEL NO. 012040-622-0
124			
125	BP	3/4" ENTRY FITTING - STANDARD VERSION FOR GROUNDING PENETRATION	"BRAVO" MODEL NO. F-07S-0-F WITH EP100 ADHESIVE AS NEEDED
126	BP	3" DOUBLE WALL FRP BONDED FITTING (USED FOR 3" OVER 2" DW PIPING	"NOV FIBERGLASS SYSTEMS" RED THREAD 11A MODEL NO. 012030-626-0
127	BP	4"x3" CONCENTRIC REDUCER (SECONDARY) (USED FOR 3" OVER 2" DW PIPING	"NOV FIBERGLASS SYSTEMS" RED THREAD 11A MODEL NO. #012040-238-3
128	BP	4" DOUBLE WALL FRP BONDED PENETRATION FITTING (USED FOR 4" OVER 3" DW PIPING)	"NOV FIBERGLASS SYSTEMS" RED THREAD 11A MODEL NO. 012040-626-0
129	BP	5"x4" CENCENTRIC REDUCER (SECONDARY) (USED FOR 4" OVER 3" DW PIPING)	"NOV FIBERGLASS SYSTEMS" RED THREAD 11A MODEL #012050-238-3

FIBERGLASS PIPING AND FITTINGS (ALL AREAS)

ITEM	BY	DESCRIPTION	MANUFACTURER
130		(NOT USED)	
131		(NOT USED)	
132		(NOT USED)	
133		(NOT USED)	
135		(NOT USED)	
136	G.C.	6" (SECONDARY) FIBERGLASS PIPE, 22'-25' LENGTH & GLUE KITS	"NOV FIBERGLASS SYSTEMS" RED THREAD 11A MODEL #011060-120-4
137	G.C.	6" COUPLING (SECONDARY)	"NOV FIBERGLASS SYSTEMS" RED THREAD 11A MODEL #012060-101-9
138	G.C.	6" 90 DEGREE ELBOW (SECONDARY)	"NOV FIBERGLASS SYSTEMS" RED THREAD 11A MODEL #012060-360-9
139	G.C.	6" 45 DEGREE ELBOW (SECONDARY)	"NOV FIBERGLASS SYSTEMS" RED THREAD 11A MODEL #012060-310-9
140	G.C.	4" BELL X MALE THREADED ADAPTER	"NOV FIBERGLASS SYSTEMS" RED THREAD 11A MODEL #002040-191-7
141	G.C.	4" X 6" CONCENTRIC REDUCER 4" X 6" CONCENTRIC REDUCER (WITH TEST PORT)	"NOV FIBERGLASS SYSTEMS" RED THREAD 11A MODEL #012060-235-9 #012060-234-7
142	G.C.	2" (PRIMARY) FIBERGLASS PIPE, 22'-25' LENGTH & GLUE KITS	"NOV FIBERGLASS SYSTEMS" RED THREAD 11A MODEL #011020-069-2
143	G.C.	2" COUPLING (PRIMARY)	"NOV FIBERGLASS SYSTEMS" RED THREAD 11A MODEL #012020-101-8
144	G.C.	2" 90 DEGREE ELBOW (PRIMARY)	"NOV FIBERGLASS SYSTEMS" RED THREAD 11A MODEL #012020-360-4
145	G.C.	2" 45 DEGREE ELBOW (PRIMARY)	"NOV FIBERGLASS SYSTEMS" RED THREAD 11A MODEL #012020-310-4
146	G.C.	2" TEE (PRIMARY)	"NOV FIBERGLASS SYSTEMS" RED THREAD 11A MODEL #120020-410-4
147	G.C.	2" THREADED ADAPTER BELL x MALE FRP	"NOV FIBERGLASS SYSTEMS" RED THREAD 11A MODEL #012020-191-4
148	G.C.	3" (PRIMARY) FIBERGLASS PIPE, 22'-25' LENGTH & GLUE KITS 3" (SECONDARY) FIBERGLASS PIPE, 22'-25' LENGTH & GLUE KITS	"NOV FIBERGLASS SYSTEMS" RED THREAD 11A PRIMARY MODEL #011030-069-2 SECONDARY MODEL #011030-069-5
149	G.C.	3" COUPLING (PRIMARY) 3" COUPLING (SECONDARY)	"NOV FIBERGLASS SYSTEMS" RED THREAD 11A PRIMARY MODEL #012030-101-8 SECONDARY MODEL #012030-101-9
150	G.C.	3" 90 DEGREE ELBOW (PRIMARY)	"NOV FIBERGLASS SYSTEMS" RED THREAD 11A MODEL #012030-360-4
151	G.C.	3" 45 DEGREE ELBOW (PRIMARY)	"NOV FIBERGLASS SYSTEMS" RED THREAD 11A MODEL #012030-310-4
152	G.C.	3" TEE (PRIMARY)	"NOV FIBERGLASS SYSTEMS" RED THREAD 11A MODEL #120030-410-4
153	G.C.	3" THREADED ADAPTER BELL x MALE FRP	"NOV FIBERGLASS SYSTEMS" RED THREAD 11A MODEL #012030-191-4
154	G.C.	3" 90 DEGREE ELBOW (SECONDARY)	"NOV FIBERGLASS SYSTEMS" RED THREAD 11A MODEL #012030-360-3
155	G.C.	3" 45 DEGREE ELBOW (SECONDARY FLAT) 3" 45 DEGREE ELBOW (SECONDARY CROSSOVER)	"NOV FIBERGLASS SYSTEMS" RED THREAD 11A FLAT MODEL #012030-310-3 CROSSOVER MODEL #012030-311-3
156	G.C.	3" TEE (SECONDARY FLAT) 3" TEE (SECONDARY CROSSOVER)	"NOV FIBERGLASS SYSTEMS" RED THREAD 11A FLAT MODEL #120030-410-3 CROSSOVER MODEL #120030-411-3
157	G.C.	4" (SECONDARY) FIBERGLASS PIPE, 22'-25' LENGTH & GLUE KITS 4" (PRIMARY) FIBERGLASS PIPE, 22'-25' LENGTH & GLUE KITS	"NOV FIBERGLASS SYSTEMS" RED THREAD 11A MODEL #011040-069-5 MODEL #011040-069-2
158	G.C.	4" COUPLING (SECONDARY) 4" COUPLING (PRIMARY)	"NOV FIBERGLASS SYSTEMS" RED THREAD 11A MODEL #012040-101-3 MODEL #012040-101-4
159	G.C.	4" 90 DEGREE ELBOW (SECONDARY) 4" 90 DEGREE ELBOW (PRIMARY)	"NOV FIBERGLASS SYSTEMS" RED THREAD 11A MODEL #012040-360-3 MODEL #012040-360-4
160	G.C.	4" 45 DEGREE ELBOW (SECONDARY FLAT) 4" 45 DEGREE ELBOW (SECONDARY CROSSOVER) 4" 45 DEGREE ELBOW (PRIMARY)	"NOV FIBERGLASS SYSTEMS" RED THREAD 11A FLAT MODEL #012040-310-3 CROSSOVER MODEL #012040-311-3 MODEL #012040-301-4
161	G.C.	4" TEE (SECONDARY FLAT) 4" TEE (SECONDARY CROSSOVER)	"NOV FIBERGLASS SYSTEMS" RED THREAD 11A FLAT MODEL #120040-410-3 CROSSOVER MODEL #120040-411-3
162	G.C.	4"X3" CONCENTRIC REDUCER (SECONDARY)	"NOV FIBERGLASS SYSTEMS" RED THREAD 11A MODEL #012040-238-3
163	G.C.	2" CAP	"NOV FIBERGLASS SYSTEMS" RED THREAD 11A MODEL #012020-180-4
164	G.C.	3"x2" REDUCER BUSHING (PRIMARY) 2"x1-1/2" FEMALE NPT REDUCER BUSHING (PRIMARY)	"NOV FIBERGLASS SYSTEMS" RED THREAD 11A 3X2 MODEL #012030-231-4 2X1.5 MODEL #012020-231-4
165	G.C.	ADDITIONAL SIMILAR FRP FITTING TYPES MAY BE REQUIRED AND SHALL BE PROVIDED BY THE CONTRACTOR.	"NOV FIBERGLASS SYSTEMS" RED THREAD 11A

MISCELLANEOUS EQUIPMENT (ALL AREAS)

ITEM	BY	DESCRIPTION	MANUFACTURER
166	GC	4" DIA. PIPE 7'-0" LG. MAX. WITH 4" NPT BELL X MALE ADAPTER (FOR HYDROSTATIC TANK MONITOR)	4" SINGLE WALL FRP "NOV FIBERGLASS SYSTEMS" RED THREAD 11A
167	BP	1-1/2" BALL VALVE-FULL PORT (IF REQUIRED)	"JOMAR" MODEL NO. 100-707
168	BP	2" BALL VALVE-FULL PORT (FOR TURBINE PRODUCT LINES) 2" STAINLESS STEEL BALL VALVE FOR E-85 FUEL, FULL PORT (FOR TURBINE PRODUCT LINES E-85 APPLICATIONS ONLY)	"JOMAR" MODEL NO. 100-708 "JOMAR" MODEL NO. 100-968
169	BP	3" BALL VALVE-FULL PORT (FOR SIPHON LINE IF USED)	"JOMAR" MODEL NO. 100-710
171	BP	1-1/2"x12" LONG FLEX CONNECTOR - MALE x MALE SWIVEL	"HOSE MASTER" MODEL # FSMS120150 (U.L. LISTED)
172	BP	1-1/2"x18" LONG FLEX CONNECTOR - MALE x MALE SWIVEL	"HOSE MASTER" MODEL # FSMS180150 (U.L. LISTED)
173	BP	2"x12" LONG FLEX CONNECTOR - 2" FEMALE x MALE SWIVEL	"HOSE MASTER" MODEL # FSFS120200 (U.L. LISTED)
174	BP	2"x18" LONG FLEX CONNECTOR - 2" FEMALE x MALE SWIVEL	"HOSE MASTER" MODEL # FSFS180200 (U.L. LISTED)
175	BP	2"x24" LONG FLEX CONNECTOR - 2" FEMALE x MALE SWIVEL	"HOSE MASTER" MODEL # FSFS240200 (U.L. LISTED)
176	BP	3"x18" LONG FLEX CONNECTOR - 3" MALE x 3" UNION (AT STAGE II VAPOR)	"HOSE MASTER" MODEL # FSMU180300 (U.L. LISTED)
177		(NOT USED)	
178	BP	6" LOCKING TEST WELL PLUG	"EBW" MODEL NO. 772-109-01
179	BP	6" FACTORY SLOTTED PVC-1 PIPE, 0.02 SLOTS OR AS REQUIRED FOR LOCAL REGULATIONS W/ CAPPED BOTTOM (LENGTH AS REQUIRED)	"ATLANTIC SCREEN" OR EQUAL
180	G.C.	6" PVC COUPLER. PRESS FIT WITH NO SOLVENT GLUES	BY G.C.
181	G.C.	6" SCH 40 SOLID PVC PIPING	BY G.C.
182	G.C.	4" NPT x 3" NPT DOUBLE TAP BUSHING-PLATED CAST IRON (SIPHON STINGERS)	"OPW" MODEL NO. 53-0038
183	G.C.	1-1/2" OR 2" OR 3" GALVANIZIED STEEL PIPE	"ANVIL" OR EQUAL
184	G.C.	1-1/2" OR 2" OR 3" 90° OR 45° GALVANIZIED STEEL ELBOW	"ANVIL" OR EQUAL
185	G.C.	1-1/2" OR 2" OR 3" GALVANIZIED STEEL PIPE TEE	"ANVIL" OR EQUAL
186	G.C.	1-1/2" OR 2" OR 3" GALVANIZIED STEEL PIPE UNION	"ANVIL" OR EQUAL
187	G.C.	1" RIGID CONDUIT	BY G.C.
188	G.C.	J-BOX "NEMA" 3R 4X4 OR 16" SQ.	"CROUSE HINDS" GUP215
189	G.C.	J-BOX EXP. PROOF	"CROUSE HINDS" 1" GUA SERIES
190	G.C.	(NOT USED)	
191	G.C.	SEAL OFF W/ DRAIN	"CROUSE HINDS" 1" EYS3 (VERTICAL) OR EYS31 (VERTICAL OR HORIZONTAL) W/ ECD15 UNIVERSAL DRAIN
192	G.C.	SEAL OFF	"CROUSE HINDS" 1" EYS3 (VERTICAL) OR EYS31 (VERTICAL OR HORIZONTAL)

VEEDER ROOT EQUIPMENT (ALL AREAS)

ITEM	BY	DESCRIPTION	MANUFACTURER
200	BP	TLS-450 PLUS ENVIRONMENTAL & INVENTORY MANAGEMENT SYSTEM WITH INTEGRAL PRINTER (W/ ALL REQUIRED SENSOR MODULES REQUIREMENTS, DIM MODULE, RS232 PORT, V-27 SOFTWARE)	"VEEDER-ROOT" MODEL NO. 860091-302
201	BP	MAG SUMP LIQUID SENSOR, 12" MODEL, DISCRIMINATING, POSITION SENSITIVE (FOR ALL CORE AND NYC EAST OF ROCKIES - ALL SUMPS)	"VEEDER-ROOT" MODEL NO. 857080-111
202	BP	SUMP LIQUID SENSOR, POSITION SENSITIVE (FOR ALL CORE AND CA LOCATIONS WEST OF ROCKIES - ALL SUMPS)	"VEEDER-ROOT" MODEL NO. 794380-208 (PREFERRED) "VEEDER-ROOT" MODEL NO. 794380-323
203	BP	HYDROSTATIC SENSOR-DUAL FLOAT (ALL LOCATIONS) (INCLUDES 4" RISER PIPE CAP MODEL 329992-002)	"VEEDER-ROOT" MODEL NO. 794380-303
204	BP	TANK LEVEL 8' MAGNETOSTRICTIVE PROBE-0.1 GPH (USE 4" FLOAT IN KIT) TANK LEVEL 10' MAGNETOSTRICTIVE PROBE-0.1 GPH (USE 4" FLOAT IN KIT) TANK LEVEL 11' MAGNETOSTRICTIVE PROBE-0.1 GPH (USE WITH 10'ø W/ MANWAY) (ALCOHOL COMPATIBLE)	"VEEDER-ROOT" MODEL NO. VR-846397-107 "VEEDER-ROOT" MODEL NO. VR-846397-109 "VEEDER-ROOT" MODEL NO. VR-846397-111 "VEEDER-ROOT" MODEL NO. VR-846397-407 "VEEDER-ROOT" MODEL NO. VR-846397-409 "VEEDER-ROOT" MODEL NO. VR-846397-410
205	BP	2" FLOAT PROBE KIT (GASOLINE) (ONLY WHEN ATG BUNG NOT ON CENTER OF TANK) 4" FLOAT PROBE KIT W/ WATER/PHASE DETECTION FOR TANK LEVEL PROBE (GASOLINE)	"VEEDER-ROOT" MODEL NO. VR-846400-100 "VEEDER-ROOT" MODEL NO. VR-886100-010
206	BP	2" FLOAT PROBE KIT (DIESEL) (ONLY WHEN ATG BUNG NOT ON CENTER OF TANK) 4" FLOAT PROBE INSTALL KIT FOR TANK LEVEL PROBE (DIESEL) 4" FLOAT PROBE INSTALL KIT FOR TANK LEVEL PROBE (ALCOHOL COMPATIBLE)	"VEEDER-ROOT" MODEL NO. VR-846400-111 "VEEDER-ROOT" MODEL NO. VR-846400-011 "VEEDER-ROOT" MODEL NO. VR-846400-004
207	BP	TANK GAUGE PORT CAP AND RING KIT PER CARB EVR EXEC ORDER VR-101 & VR-102	"VEEDER ROOT" MODEL NO. VR-312020-952
208	BP	DIGITAL 3 GPH PRESSURE LINE LEAK DETECTION AT TURBINES	"VEEDER-ROOT" MODEL NO. 859080-001
209	BP	OVERFILL ALARM WITH HORN/STROBE 120VAC	"VEEDER-ROOT" MODEL NO. 790091-001
210	BP	ACKNOWLEDGEMENT SWITCH	"VEEDER-ROOT" MODEL NO. 790095-001
211	BP	MANIFOLD SIPHON BREAK VALVE KIT	"VEEDER-ROOT" MODEL NO. 330020-031
212			
213			
214		(NOT USED)	
215		(NOT USED)	
216		(NOT USED)	
217		(NOT USED)	

MATERIAL LIST AT BUILDING (ALL AREAS)

ITEM	BY	DESCRIPTION	MANUFACTURER
220	BP	ELECTRICAL POWER AND CONTROL CABINET "EPC" PREFABRICATED WITH ALL ELECTRICAL PANELS, BREAKERS, TURBINE CONTROLLERS, ISOLATION RELAYS, DISPENSER LOW VOLTAGE DISCONNECT (DATA/CRIND/INTERCOM/ETHERNET) AND FIELD WIRING TERMINAL BLOCKS. SITE SPECIFIC CONFIGURATION PROVIDED AND U.L. LISTED FOR THIS APPLICATION.	"PER BP REQUIREMENTS" (SUPPLIED DIRECTLY TO SITE)
221	BP	POWER CONDITIONER	"ONEAC" MODEL NO. CB1115 OR EQUAL W/ HARD WIRE PART #011-002
223	BP	VERIFONE SITE COMMANDER SITE CONTROLLER	"VERIFONE" COMMANDER SITE CONTROLLER
224	BP	TOKHEIM INTERCONNECT/ISOLATION MODULE FOR PIC UNITS (ARCO BRANDED SITES ONLY)	"TOKHEIM" SAM PIC INTERFACE UNIT (SUPPLIED DIRECTLY FROM TOKHEIM)
225	BP	TOKHEIM SAM CONTROLLER BOX FOR PIC UNITS (ARCO BRANDED SITES ONLY)	"TOKHEIM" SAM CONTROLLER BOX (SUPPLIED DIRECTLY FROM TOKHEIM)
228	BP	POS MODULE (POINT OF SALE)	POS SYSTEM BP CONFIGURATION (SOFTWARE SUPPLIED DIRECTLY FROM MANUFACTURER)
229	BP	INTERCOM TO DISPENSERS (CONSOLE MOUNTED AT SALES COUNTER)	"3M" INTERCOM MASTER MODEL # 3M-D-120 (12 CHANNEL) DISPENSER MOUNTED SPEAKERS BY DISP. MANF.
230	BP	EMERGENCY PUMP SHUT OFF SWITCH (INDOOR/OUTDOOR)	"SQUARE D" CLASS 9001 KR3RH6 PUSH-BUTTON N.C. WITH BOX AND COVER. (FOR OUTDOOR NEMA 3R ENCLOSURE REQUIRED) (OR EQUAL)
231	BP	EMERGENCY PUMP SHUT OFF RESET SWITCH (INDOOR AT SALES COUNTER)	"SQUARE D" CLASS 9001 KR3RH5 PUSH-BUTTON N.C. WITH BOX AND COVER. (FOR OUTDOOR NEMA 3R ENCLOSURE REQUIRED) (OR EQUAL)
232	G.C.	MAINTENANCE RECEPTACLE	"HUBBELL" SPECIFICATION GRADE RECEPTACLE GFCI IN WEATHERPROOF COVER

NOTE: THIS MATERIALS EQUIPMENT SCHEDULE IS NOT A COMPLETE LIST OF MATERIALS. CONTRACTOR IS RESPONSIBLE FOR PROVIDING AND INSTALLING ALL MISCELLANEOUS EQUIPMENT, FITTINGS, MATERIALS AND DEVICES NECESSARY TO PROVIDE A COMPLETE AND OPERABLE SYSTEM. CONTRACTOR TO COORDINATE MATERIALS DELIVERY SCHEDULE AND VERIFY EQUIPMENT COUNTS. CONTRACTOR IS RESPONSIBLE FOR VERIFYING THAT ALL EQUIPMENT ARRIVES AT SITE IN UNDAMAGED CONDITION.

NOTE: SEE SECTION 12 ON THE TANK AND PIPING INSTALLATION SCOPE OF WORK FOR THE USE OF ALTERNATE PENETRATION FITTINGS.

CLIENT:

bp

ARCO

BP WEST COAST PRODUCTS, LLC

Barghausen Consulting Engineers, Inc.

18215 72nd Avenue South
Kent, WA 98032
425.251.6222
barghausen.com

NO.	DATE	REVISION DESCRIPTION
1	10/04/23	PERMIT RELEASE
2		
3		
4		
5		
6		
7		
8		
9		
10		
11		
12		

SEAL:

HAL P. GRUBB — STATE OF WASHINGTON — 23975 — REGISTERED PROFESSIONAL ENGINEER

10/4/2023

DEVELOPMENT INFORMATION:

ARCO NTI

3400 am/pm FUEL CANOPY w/ 6 MPD's

SITE ADDRESS:

SWC S MERIDIAN
@ HIGHWAY 512
PUYALLUP, WASHINGTON

FACILITY #TBD

DESIGNED BY:	NP/RF	ALLIANCE ZADM:	
CHECKED BY:	OV	BP REPM:	
DRAWN BY:	NP/RF	ALLIANCE PM:	
VERSION:	V-15.0 01/01/2023	PROJECT NO:	21730

DRAWING TITLE:

TANK AND PIPING MATERIALS LIST (2 OF 2)
TLS-450

SHEET NO:

M.5.1.02

P:\21000s\21730\mechanical\tanks\21730 M.5.1.01 and M.5.1.02.dwg 10/2/2023 3:49 PM NPHAN

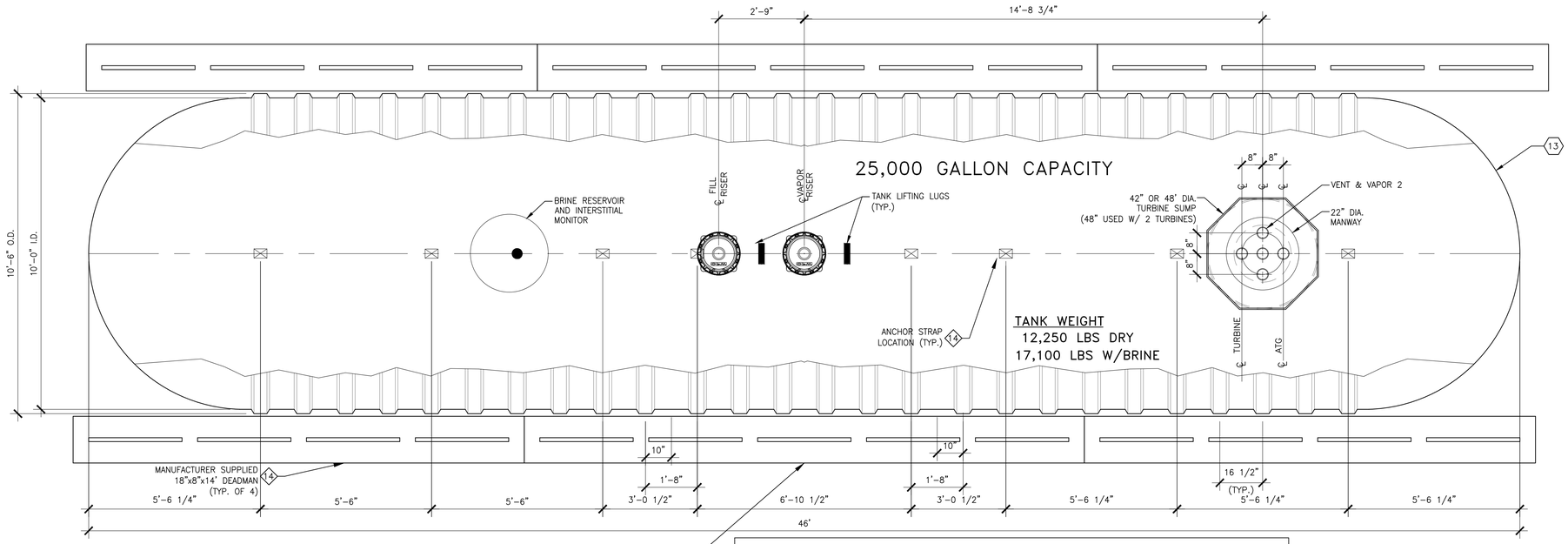

UNDERGROUND TANK PLAN VIEW

SCALE: 1/2" = 1'-0"

FOR USE WHEN TANKS ARE PLACED SIDE BY SIDE

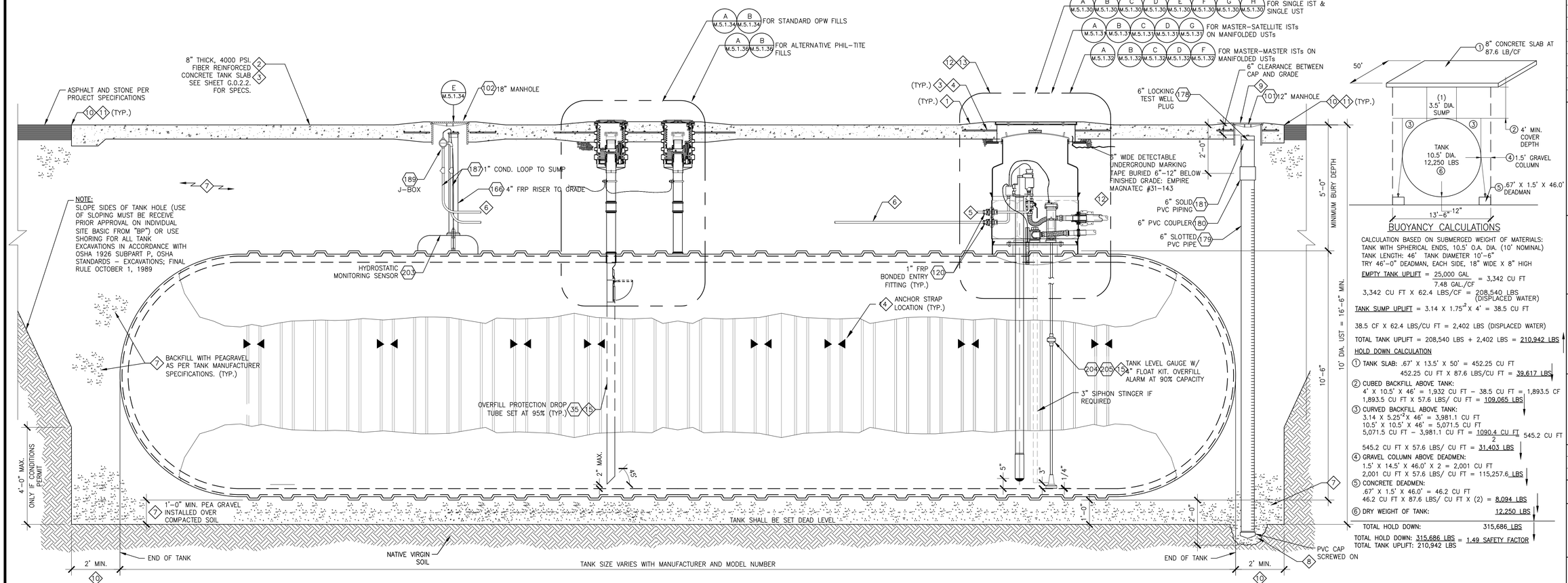

A: UNDERGROUND TANK SECTION DETAIL

SCALE: 1/2" = 1'-0"

XX NOTE: INDICATES ITEMS FOUND ON MATERIALS LIST SHEETS M.5.1.01 & M.5.1.02

BUOYANCY CALCULATIONS

CALCULATION BASED ON SUBMERGED WEIGHT OF MATERIALS:
TANK WITH SPHERICAL ENDS, 10.5' O.A. DIA. (10' NOMINAL)
TANK LENGTH: 46' TANK DIAMETER 10'-6"
TRY 46'-0" DEADMAN, EACH SIDE, 18" WIDE X 8" HIGH

EMPTY TANK UPLIFT = $\frac{25{,}000 \text{ GAL}}{7.48 \text{ GAL./CF}}$ = 3,342 CU FT

3,342 CU FT X 62.4 LBS/CF = 208,540 LBS (DISPLACED WATER)

TANK SUMP UPLIFT = 3.14 X 1.75^2 X 4' = 38.5 CU FT

38.5 CF X 62.4 LBS/CU FT = 2,402 LBS (DISPLACED WATER)

TOTAL TANK UPLIFT = 208,540 LBS + 2,402 LBS = 210,942 LBS

HOLD DOWN CALCULATION

1 TANK SLAB: .67' X 13.5' X 50' = 452.25 CU FT
452.25 CU FT X 87.6 LBS/CU FT = 39,617 LBS

2 CUBED BACKFILL ABOVE TANK:
4' X 10.5' X 46' = 1,932 CU FT – 38.5 CU FT = 1,893.5 CF
1,893.5 CU FT X 57.6 LBS/ CU FT = 109,065 LBS

3 CURVED BACKFILL ABOVE TANK:
3.14 X 5.25^2 X 46' = 3,981.1 CU FT
10.5' X 10.5' X 46' = 5,071.5 CU FT
5,071.5 CU FT – 3,981.1 CU FT = $\frac{1090.4 \text{ CU FT}}{2}$ 545.2 CU FT
545.2 CU FT X 57.6 LBS/ CU FT = 31,403 LBS

4 GRAVEL COLUMN ABOVE DEADMEN:
1.5' X 14.5' X 46.0' X 2 = 2,001 CU FT
2,001 CU FT X 57.6 LBS/ CU FT = 115,257.6 LBS

5 CONCRETE DEADMEN:
.67' X 1.5' X 46.0' = 46.2 CU FT
46.2 CU FT X 87.6 LBS/ CU FT X (2) = 8,094 LBS

6 DRY WEIGHT OF TANK: 12,250 LBS

TOTAL HOLD DOWN: 315,686 LBS

TOTAL HOLD DOWN: 315,686 LBS = 1.49 SAFETY FACTOR
TOTAL TANK UPLIFT: 210,942 LBS

BUOYANCY CALC. 25,000 GAL. TANK

SCALE: NTS (TYPICAL CALCULATION ASSUMING 4' MINIMUM OVER OF GRAVEL)

#	NOTES: UST INSTALLATION
1	SLOPE CONCRETE AWAY FROM ALL MANHOLES 1" RISE OVER 12" RUN.
2	FIBER REINFORCEMENT TO BE USED. PREMIX UNIFORMLY THROUGHOUT CONCRETE.
3	REINFORCING BARS TO BE NO LESS THAN 2" AND NO MORE THAN 4" FROM SURFACE.
4	REINFORCE CONCRETE SLAB AROUND MANHOLE WITH (4) #4 REBAR 60" IN LENGTH. PLACE REBAR 6" FROM SIDES OF BOX.
5	SINGLE 1" CONDUIT TO EACH SUBMERSIBLE PUMP. PROVIDE SEAL-OFF AT SUMP & BUILDING WIRING TROUGH. CONTAINS LINE VOLTAGE WIRING. ALL CONDUIT PENETRATIONS MUST BE MADE WITH ROBROY PVC COATED CONDUIT ONLY.
6	SINGLE 1" CONDUIT TO EACH TANK. LOOP HOME RUN FROM INTERSTITIAL SENSOR LOCATION TO CONTAINMENT SUMP SENSORS &, TANK GAUGES. PROVIDE SEAL-OFF IN BUILDING & AT TANK. ROUTE TO INTRINSICALLY SAFE TROUGH IN BUILDING. CONTAINS ONLY LOW VOLTAGE WIRING FOR SENSORS. ALL CONDUIT PENETRATIONS MUST BE MADE WITH ROBROY PVC COATED CONDUIT ONLY.
7	USE PEA GRAVEL CONSISTING OF NATURALLY ROUNDED AGGREGATE, MIN ¼" & MAX OF ½" IN SIZE, FREE OF CLAY, SLAG, CINDERS, OR DEBRIS. ALL SUBSTITUTES MUST BE APPROVED BY MANUFACTURER'S & OWNER'S FIELD REPRESENTATIVE.
8	6" OBSERVATION SUMP DEPTH SHALL BE 24" BELOW TANK. DO NOT PENETRATE SOIL. DO NOT USE PVC CEMENT ON BOTTOM CAP OR OTHER COUPLINGS OR FITTINGS.
9	TANK EXCAVATION OBSERVATION SUMP (2). INSTALLED WITH TANKS, DO NOT DRILL AFTER INSTALLATION.
10	TANK PAD MINIMUM 2'-0" OFF OUTSIDE WALLS OF TANKS, AND MUST COVER THE FOOTPRINT OF THE TANKS. REQUIRED TO PROVIDE FOR PROPER TANK HOLD DOWN, AND TO PREVENT ACCIDENTAL DRILLING INTO TANK.
11	CUT CORNER WHERE MEETING ASPHALT PAVING ONLY. SQUARE CORNERS WHERE MEETING CONCRETE.
12	REFER TO SITE SPECIFIC PLANS FOR ACTUAL PIPE RUNS & NUMBER OF PRODUCT LINES (1 OR 2 PER UST SUMP).
13	TURBINE SUMP CONFIGURATION SHOWN IS TYPICAL. FOR SPECIFIC DESIGN CRITERIA AT THESE SUMPS SEE ACCOMPANYING TANK INSTALLATION SITE PLAN & SUMP DETAIL DRAWINGS NOTED ABOVE.
14	TANK ANCHORING. CONSULT LOCAL REGULATION; VERIFY WITH OWNER'S REPRESENTATIVE.
15	OVERFLOW PROTECTION: UST OVERFLOW COMPLIANCE IS ACHIEVED BY USE OF OVERFLOW PREVENTION DROP TUBE FLAPPER VALVE SET AT 95% AND IS IN ACCORDANCE WITH FEDERAL AND STATE GUIDELINES FOR UST OVERFILL REQUIREMENTS. AN OVERFILL ALARM AND ACKNOWLEDGE SWITCH TIED INTO THE VEEDER ROOT AUTOMATIC TANK GAUGE SYSTEM. THE MONITORING SYSTEM PROVIDES AN AUDIBLE AND VISUAL ALARM WHEN THE TANK(S) ARE FILLED TO THE 90% LEVEL.

CLIENT:

bp

ARCO
BP WEST COAST PRODUCTS, LLC

Barghausen Consulting Engineers, Inc.
18215 72nd Avenue South
Kent, WA 98032
425.251.6222
barghausen.com

NO.	DATE	REVISION DESCRIPTION
1	10/04/23	PERMIT RELEASE
2		
3		
4		
5		
6		
7		
8		
9		
10		
11		
12		

SEAL:

HAL P. GRUBB — STATE OF WASHINGTON — 23975 — REGISTERED PROFESSIONAL ENGINEER
10/4/2023

DEVELOPMENT INFORMATION:
ARCO NTI
3400 am/pm FUEL CANOPY w/ 6 MPD's

SITE ADDRESS:
SWC S MERIDIAN
@ HIGHWAY 512
PUYALLUP, WASHINGTON

FACILITY #TBD

DESIGNED BY:	NP/RF	ALLIANCE Z&DM:	
CHECKED BY:	OV	BP REPM:	
DRAWN BY:	NP/RF	ALLIANCE PM:	
VERSION:	V-15.0 01/01/2023	PROJECT NO:	21730

DRAWING TITLE:
TYPICAL 10' DIA. 25,000 GALLON DOUBLE WALL FIBERGLASS TANK INSTALLATION DETAILS (MID FILL)

SHEET NO:
M.5.1.04

P:\21000s\21730\mechanical\tanks\21730 M.5.1.04 & M.5.1.15.dwg 10/2/2023 1:45 PM NPHAN

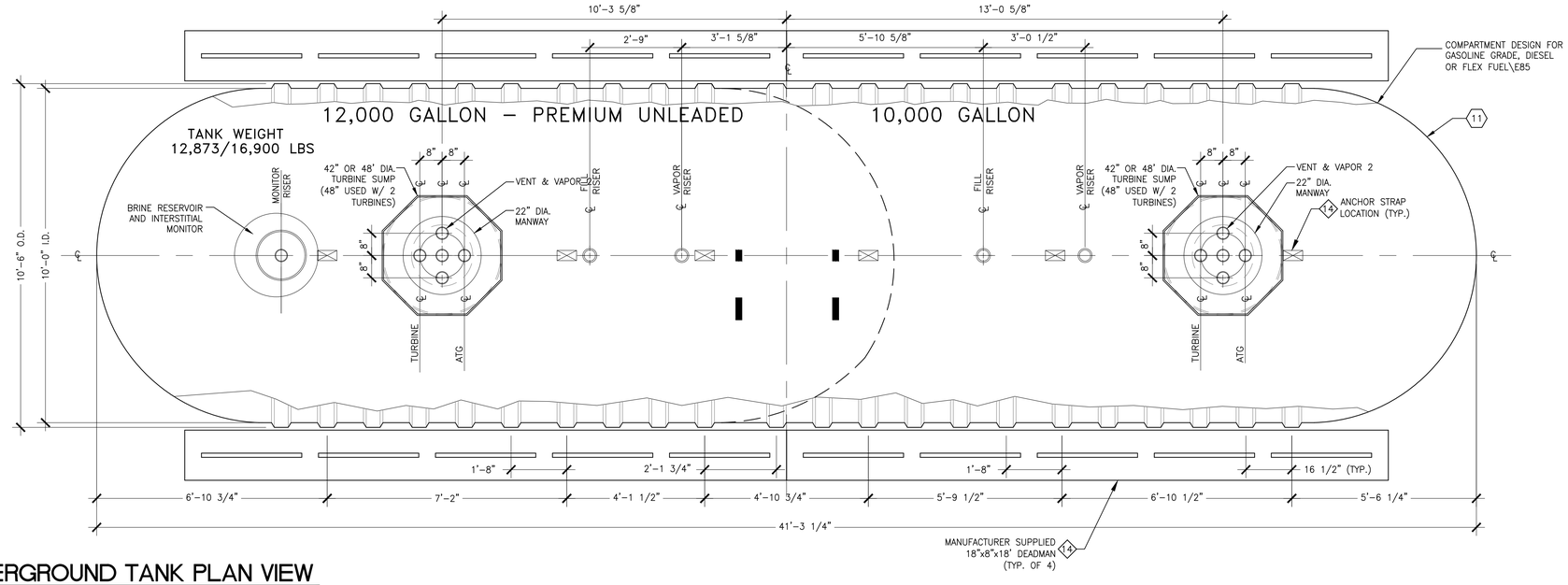

UNDERGROUND TANK PLAN VIEW

SCALE: 1/2" = 1'-0"

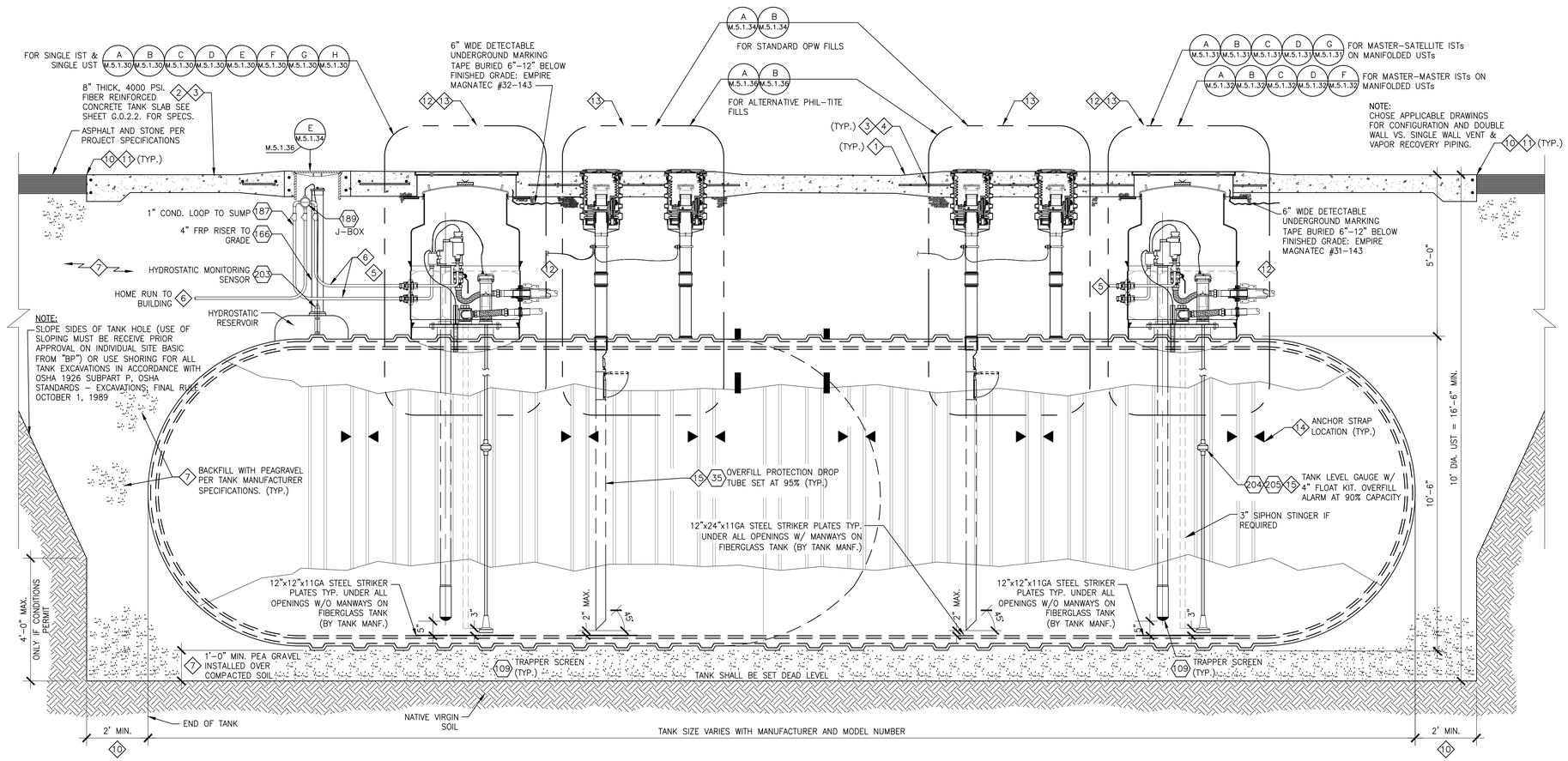

A: UNDERGROUND TANK SECTION DETAIL

SCALE: 1/2" = 1'-0"

XX NOTE: INDICATES ITEMS FOUND ON MATERIALS LIST SHEETS M.5.1.01 & M.5.1.02

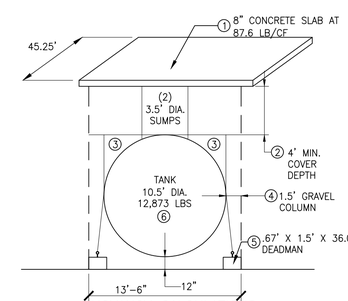

BUOYANCY CALCULATIONS

CALCULATION BASED ON SUBMERGED WEIGHT OF ALL MATERIALS:
TANK WITH SPHERICAL ENDS, 10.5' O.A. DIA. (10' NOMINAL)
TANK LENGTH: 41' 3-1/4" TANK DIAMETER 10'-6"
TRY 36'-0" DEADMAN, EACH SIDE, 18" WIDE X 8" HIGH

EMPTY TANK UPLIFT = $\frac{22{,}000 \text{ GAL.}}{7.48 \text{ GAL./CF}}$ = 2941 CU FT

2941 CU FT X 62.4 LBS/CF = 183,518 LBS (DISPLACED WATER)

TANK SUMP UPLIFT = (2) X 3.14 X $1.75'^2$ X 4' = 76.9 CU FT

76.9 CF X 62.4 LBS/CU FT = 4,798 LBS (DISPLACED WATER)

TOTAL TANK UPLIFT = 183,518 LBS + 4,804 LBS = 188,322 LBS

HOLD DOWN CALCULATION

1. TANK SLAB: .67' X 13.5' X 45.25' = 409.2 CU FT
   409.2 CU FT X 87.6 LBS/CU FT = 35,846 LBS
2. CUBED BACKFILL ABOVE TANK:
   4' X 10.5' X 41.25' = 1,732.5 CU FT – 76.9 CU FT = 1655 CF
   1655 CU FT X 57.6 LBS/ CU FT = 95,328 LBS
3. CURVED BACKFILL ABOVE TANK:
   3.14 X $5.25'^2$ X 41.25' = 3,570.0 CU FT
   10.5' X 10.5' X 41.25' = 4,547.8 CU FT
   4,547.8 CU FT – 3,570.0 CU FT = $\frac{977.8 \text{ CU FT}}{2}$ = 488.9.0 CU FT
   488.9 CU FT X 57.6 LBS/ CU FT = 28,161 LBS
4. GRAVEL COLUMN ABOVE DEADMEN:
   1.5' X 14.5' X 36.0' X 2 = 1,566 CU FT
   1,566 CU FT X 57.6 LBS/ CU FT = 90,202 LBS
5. CONCRETE DEADMEN:
   .67' X 1.5' X 36.0' = 36.2 CU FT
   36.2 FT X 87.6 LBS/ CU FT X (2) = 6,342 BS
6. DRY WEIGHT OF TANK: 12,873 LBS

TOTAL HOLD DOWN: 268,752 LBS

TOTAL HOLD DOWN: 268,752 LBS
TOTAL TANK UPLIFT: 188,322 LBS = 1.42 SAFETY FACTOR

BUOYANCY CALC. 22,000 GAL. SPLIT TANK

SCALE: NTS (TYPICAL CALCULATION ASSUMING 4' MINIMUM OVER OF GRAVEL)

NOTES: UST INSTALLATION

#	
1	SLOPE CONCRETE AWAY FROM ALL MANHOLES 1" RISE OVER 12" RUN.
2	FIBER REINFORCEMENT TO BE USED. PREMIX UNIFORMLY THROUGHOUT CONCRETE.
3	REINFORCING BARS TO BE NO LESS THAN 2" AND NO MORE THAN 4" FROM SURFACE.
4	REINFORCE CONCRETE SLAB AROUND MANHOLE WITH (4) #4 REBAR 60" IN LENGTH. PLACE REBAR 6" FROM SIDES OF BOX.
5	SINGLE 1" CONDUIT TO EACH SUBMERSIBLE PUMP. PROVIDE SEAL-OFF AT SUMP & BUILDING WIRING TROUGH. CONTAINS LINE VOLTAGE WIRING. ALL CONDUIT PENETRATIONS MUST BE MADE WITH ROBROY PVC COATED CONDUIT ONLY.
6	SINGLE 1" CONDUIT TO EACH TANK. LOOP HOME RUN FROM INTERSTITIAL SENSOR LOCATION TO CONTAINMENT SUMP SENSORS &, TANK GAUGES. PROVIDE SEAL-OFF IN BUILDING & AT TANK. ROUTE TO INTRINSICALLY SAFE TROUGH IN BUILDING. CONTAINS ONLY LOW VOLTAGE WIRING FOR SENSORS. ALL CONDUIT PENETRATIONS MUST BE MADE WITH ROBROY PVC COATED CONDUIT ONLY.
7	USE PEA GRAVEL CONSISTING OF NATURALLY ROUNDED AGGREGATE, MIN ⁄" & MAX OF ⁄" IN SIZE, FREE OF CLAY, SLAG, CINDERS, OR DEBRIS. ALL SUBSTITUTES MUST BE APPROVED BY MANUFACTURER'S & OWNER'S FIELD REPRESENTATIVE.
8	NOT USED
9	NOT USED
10	TANK PAD MINIMUM 2'-0" OFF OUTSIDE WALLS OF TANKS, AND MUST COVER THE FOOTPRINT OF THE TANKS. REQUIRED TO PROVIDE FOR PROPER TANK HOLD DOWN, AND TO PREVENT ACCIDENTAL DRILLING INTO TANK.
11	CUT CORNER WHERE MEETING ASPHALT PAVING ONLY. SQUARE CORNERS WHERE MEETING CONCRETE.
12	REFER TO SITE SPECIFIC PLANS FOR ACTUAL PIPE RUNS & NUMBER OF PRODUCT LINES (1 OR 2 PER UST SUMP).
13	TURBINE SUMP CONFIGURATION SHOWN IS TYPICAL. FOR SPECIFIC DESIGN CRITERIA AT THESE SUMPS SEE ACCOMPANYING TANK INSTALLATION SITE PLAN & SUMP DETAIL DRAWINGS NOTED ABOVE.
14	TANK ANCHORING. CONSULT LOCAL REGULATION; VERIFY WITH OWNER'S REPRESENTATIVE.
15	OVERFLOW PROTECTION: UST OVERFLOW COMPLIANCE IS ACHIEVED BY USE OF OVERFLOW PREVENTION DROP TUBE FLAPPER VALVE SET AT 95% AND IS IN ACCORDANCE WITH FEDERAL AND STATE GUIDELINES FOR UST OVERFILL REQUIREMENTS. AN OVERFILL ALARM AND ACKNOWLEDGE SWITCH TIED INTO THE VEEDER ROOT AUTOMATIC TANK GAUGE SYSTEM. THE MONITORING SYSTEM PROVIDES AN AUDIBLE AND VISUAL ALARM WHEN THE TANK(S) ARE FILLED TO THE 90% LEVEL.

CLIENT: bp

ARCO
BP WEST COAST PRODUCTS, LLC

Barghausen Consulting Engineers, Inc.
18215 72nd Avenue South
Kent, WA 98032
425.251.6222
barghausen.com

NO.	DATE	REVISION DESCRIPTION
1	10/04/23	PERMIT RELEASE
2		
3		
4		
5		
6		
7		
8		
9		
10		
11		
12		

SEAL: HAL P. GRUBB, STATE OF WASHINGTON, 23975, REGISTERED PROFESSIONAL ENGINEER, 10/4/2023

DEVELOPMENT INFORMATION:
ARCO NTI
3400 am/pm FUEL CANOPY w/ 6 MPD's

SITE ADDRESS:
SWC S MERIDIAN
@ HIGHWAY 512
PUYALLUP, WASHINGTON

FACILITY #TBD

DESIGNED BY:	NP/RF	ALLIANCE ZADM:	
CHECKED BY:	OV	BP REPM:	
DRAWN BY:	NP/RF	ALLIANCE PM:	
VERSION:	V-15.0 01/01/2023	PROJECT NO:	21730

DRAWING TITLE:
TYP. 10' DIA.12,000/10,000 GALLON DOUBLE WALL FIBERGLASS TANK INSTALLATION DETAILS

SHEET NO:
M.5.1.15

P:\210000s\21730\mechanical\tanks\21730 M.5.1.04 & M.5.1.15.dwg 10/2/2023 1:45 PM NPHAN

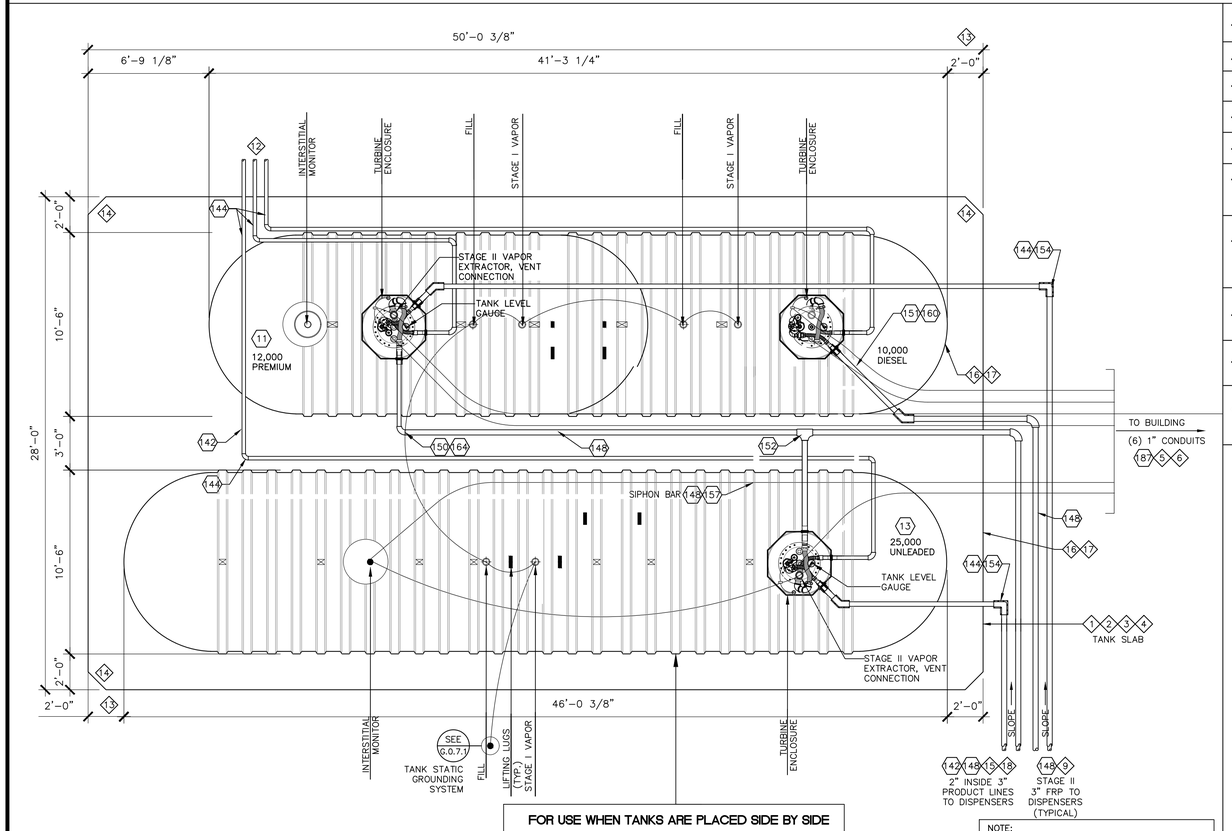

FOR USE WHEN TANKS ARE PLACED SIDE BY SIDE

NOTE:
INSTALL 6" WIDE DETECTABLE UNDERGROUND MARKING TAPE EMPIRE MAGNATEC #31-143 BURIED 6"-12" BELOW FINISHED GRADE WHERE UNDERGROUND PRODUCT, VAPOR & VENT PIPING RUN

NOTE:
WHERE DIFFERENT SIZED TANKS ARE USED, ALIGN THE FILL PORTS TO FACILITATE TANKER DELIVERIES

NOTE:
ALL VENT AND VAPOR PIPING SHALL BE SINGLE WALL FIBERGLASS PIPING BY N.O.V. RED THREAD IIA. DOUBLE WALL VENT AND VAPOR RECOVERY ONLY TO BE INSTALLED WHEN REQUIRED BY LOCAL JURISDICTION.

A: TANK INSTALLATION - PLAN VIEW - BLENDING ADJACENT LAYOUT

SCALE: 1/4" = 1'-0"

NOTES: UST INSTALLATION

#	
1	SLOPE CONCRETE AWAY FROM ALL MANHOLES 1" RISE OVER 12" RUN.
2	FIBER REINFORCEMENT TO BE USED. PREMIX UNIFORMLY THROUGHOUT CONCRETE.
3	REINFORCING BARS TO BE NO LESS THAN 2" AND NO MORE THAN 4" FROM SURFACE.
4	REINFORCE CONCRETE SLAB AROUND MANHOLE WITH (4) #4 REBAR 60" IN LENGTH. PLACE REBAR 6" FROM SIDES OF BOX.
5	SINGLE 1" CONDUIT TO EACH SUBMERSIBLE PUMP. PROVIDE SEAL-OFF AT SUMP & BUILDING WIRING TROUGH. CONTAINS LINE VOLTAGE WIRING. ALL CONDUIT PENETRATIONS MUST BE MADE WITH ROBROY PVC COATED CONDUIT ONLY.
6	SINGLE 1" CONDUIT TO EACH TANK. LOOP HOME RUN FROM INTERSTITIAL SENSOR LOCATION TO CONTAINMENT SUMP SENSORS & TANK GAUGES. PROVIDE SEAL-OFF IN BUILDING & AT TANK. ROUTE TO INTRINSICALLY SAFE TROUGH IN BUILDING. CONTAINS ONLY LOW VOLTAGE WIRING FOR SENSORS. ALL CONDUIT PENETRATIONS MUST BE MADE WITH ROBROY PVC COATED CONDUIT ONLY.
7	USE PEA GRAVEL CONSISTING OF NATURALLY ROUNDED AGGREGATE, MIN ⅛" & MAX OF ¾" IN SIZE, FREE OF CLAY, SLAG, CINDERS, OR DEBRIS. ALL SUBSTITUTES MUST BE APPROVED BY MANUFACTURER'S & OWNER'S FIELD REPRESENTATIVE.
8	6" OBSERVATION SUMP DEPTH SHALL BE 24" BELOW TANK. DO NOT PENETRATE SOIL. DO NOT USE PVC CEMENT ON BOTTOM CAP OR OTHER COUPLINGS OR FITTINGS.
9	LAYOUT TANKS & STAGE II VAPOR RECOVERY PIPING SUCH THAT THE STAGE II PIPING DRAINS & ENTERS INTO REGULAR UNLEADED TANK FIRST W/ 3" CONNECTIONS. ALL OTHER CONNECTIONS MADE W/ 2".
10	NOT USED.
11	TANK EXCAVATION OBSERVATION SUMP (2). INSTALLED WITH TANKS, DO NOT DRILL AFTER INSTALLATION.
12	TO ABOVE GROUND VENT RISERS, SEE DETAIL ON SHEET G.0.6.1.
13	TANK PAD MINIMUM 2'-0" OFF OUTSIDE WALLS OF TANKS, AND MUST COVER THE FOOTPRINT OF THE TANKS. REQUIRED TO PROVIDE FOR PROPER TANK HOLD DOWN, AND TO PREVENT ACCIDENTAL DRILLING INTO TANK.
14	CUT CORNER WHERE MEETING ASPHALT PAVING ONLY. SQUARE CORNERS WHERE MEETING CONCRETE.
15	DIESEL DESIGN USES JUST ONE PRODUCT LINE TO DIESEL DISPENSER.
16	REFER TO DIESEL UST INSTALLATION DRAWING FOR STAND-ALONE UST OR AS AN EXTENSION TO THIS UST DESIGN.
17	SEE SITE SPECIFIC PLANS FOR ACTUAL TANK SIZES, PLACEMENT, AND ORIENTATION. FINAL SITE SPECIFIC TANK LAYOUTS SHALL BE APPROVED BY THE LOCAL DISTRIBUTION TERMINAL MANAGER OR HIS AGENT. FINAL LOCATION SIGN-OFF SHALL BE DOCUMENTED.
18	REFER TO SITE SPECIFIC PLANS FOR ACTUAL PIPE RUNS & NUMBER OF PRODUCT LINES (1 OR 2 PER UST SUMP).
19	ANY STRUCTURE THAT ENCROACHES WITHIN THE UST STRUCTURAL EXCLUSION ZONE, WHERE NOT OTHERWISE AVOIDABLE, SHALL BE IDENTIFIED ON THE PLANS. IT WILL BE THE ARCHITECT OF RECORD'S OBLIGATION TO IDENTIFY AND COORDINATE WITH THE STRUCTURAL ENGINEER OF THE NEED TO DESIGN THE ENCROACHING STRUCTURAL ELEMENT(S) TO MITIGATE ANY LATERAL LOAD TRANSMITTANCE TO THE UNDERGROUND STORAGE TANKS.

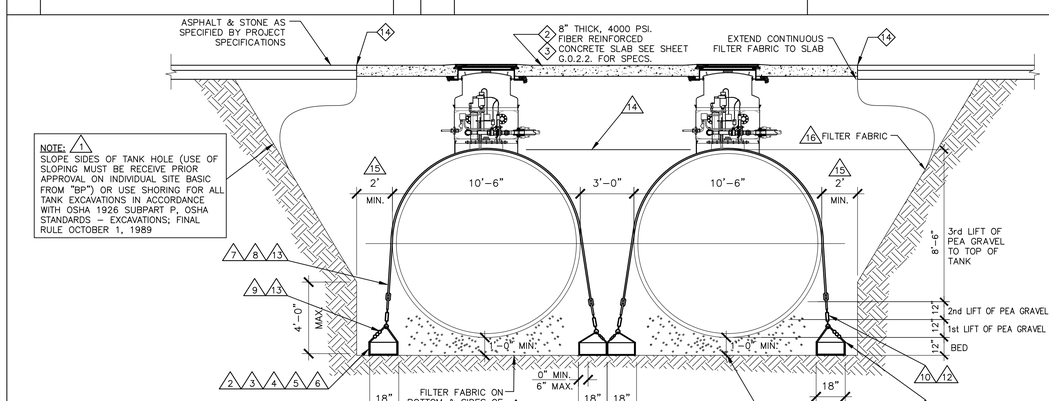

NOTE:
SLOPE SIDES OF TANK HOLE (USE OF SLOPING MUST BE RECEIVE PRIOR APPROVAL ON INDIVIDUAL SITE BASIC FROM "BP") OR USE SHORING FOR ALL TANK EXCAVATIONS IN ACCORDANCE WITH OSHA 1926 SUBPART P, OSHA STANDARDS - EXCAVATIONS; FINAL RULE OCTOBER 1, 1989

NOTE:
ALTERNATE ANCHORING BY USE OF A CONCRETE ANCHORING PAD IS PERMITTED. CONSULT WITH OWNER'S REPRESENTATIVE AND SUCH SHALL BE INSTALLED ACCORDING TO MANUFACTURER'S RECOMMENDATION.

NOTE:
DEFLECTION MEASUREMENT BEFORE & AFTER TANK INSTALLATION SHALL BE ACCORDING TO MANUFACTURER'S REQUIREMENTS AND SHALL BE WITHIN MANUFACTURER'S TOLERANCES. ALL INFORMATION SHALL BE COMPLETED AS PER THE MANUFACTURER'S WARRANTY DOCUMENTATION.

7 1'-0" MIN. PEA GRAVEL INSTALLED OVER COMPACTED SOIL. IN WET HOLE INSTALLATIONS, INCREASE TO 18" MINIMUM PER MANUFACTURER'S RECOMMENDED INSTALLATION GUIDELINES.

NOTE:
XX INDICATES ITEMS FOUND ON MATERIALS LIST SHEETS M.5.1.01 & M.5.1.02

C: TYPICAL TANK ANCHORING DETAIL

SCALE: 1/4" = 1'-0"

CLIENT:

bp

ARCO

BP WEST COAST PRODUCTS, LLC

Barghausen Consulting Engineers, Inc.

18215 72nd Avenue South
Kent, WA 98032
425.251.6222
barghausen.com

NO.	DATE	REVISION DESCRIPTION
1	10/04/23	PERMIT RELEASE
2		
3		
4		
5		
6		
7		
8		
9		
10		
11		
12		

SEAL:

HAL P. GRUBB
STATE OF WASHINGTON
23975
REGISTERED PROFESSIONAL ENGINEER

10/4/2023

DEVELOPMENT INFORMATION:

ARCO NTI

3400 am/pm FUEL CANOPY w/ 6 MPD's

SITE ADDRESS:

SWC S MERIDIAN

@ HIGHWAY 512
PUYALLUP, WASHINGTON

FACILITY #TBD

DESIGNED BY:	NP/RF	ALLIANCE Z&DM:	
CHECKED BY:	OV	BP REPM:	
DRAWN BY:	NP/RF	ALLIANCE PM:	
VERSION:	V-15.0	PROJECT NO:	21730
	01/01/2023		

DRAWING TITLE:

UST INSTALLATION (2) 10' DIA. 25K/22K BLENDING

SHEET NO:

M.5.1.28

P:\21000s\21730\mechanical\tanks\21730 M.5.1.28.dwg 10/2/2023 2:05 PM NPHAN

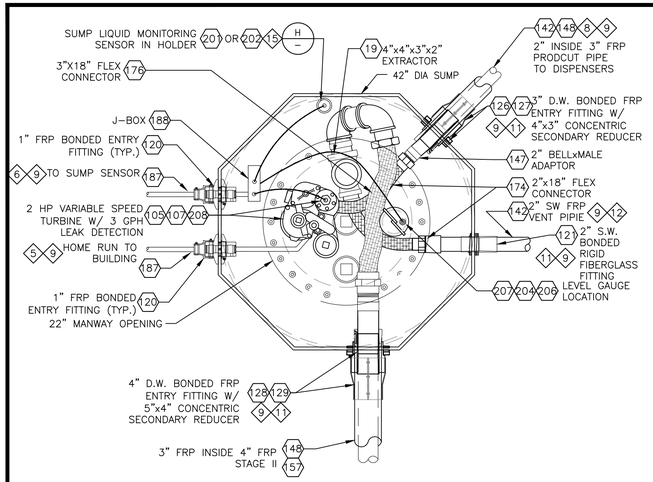

IST PUMP CONTROLS ARE TIED TO VEEDER ROOT TLS–450.

A: PLAN VIEW - ONE PUMP, ONE LINE

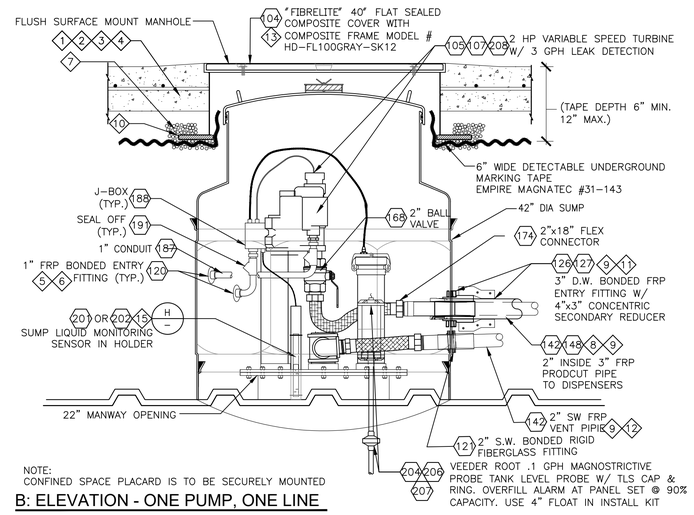

NOTE:
CONFINED SPACE PLACARD IS TO BE SECURELY MOUNTED

B: ELEVATION - ONE PUMP, ONE LINE

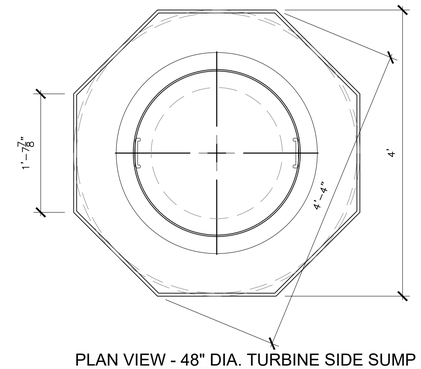

PLAN VIEW - 48" DIA. TURBINE SIDE SUMP

SCALE: 1" = 1'-0"

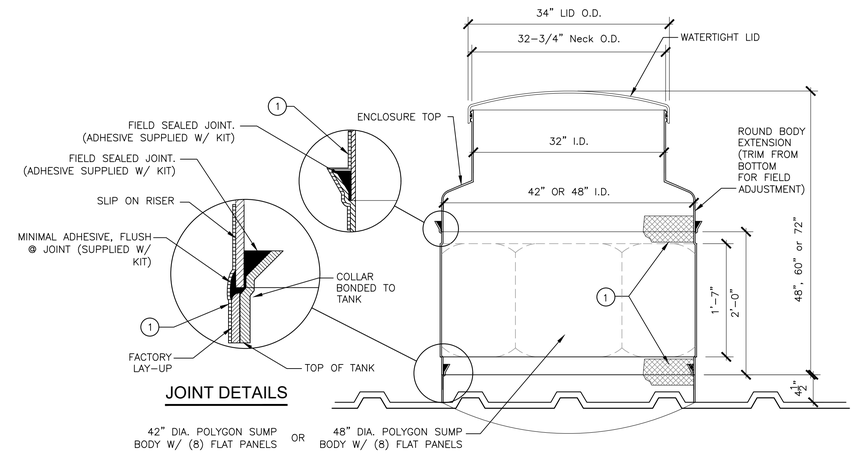

JOINT DETAILS

(1) CONTRACTOR TO ADDITIONALLY GLASS WRAP & LAMINATE AT CONNECTION FOLLOWING CURING OF ADHESIVE. SPECIFIC ATTENTION MUST BE GIVEN TO SURFACE PREP AS TESTING REQUIREMENTS WILL DETECT THE SMALLEST OF FLAWS. ALL MATERIALS MUST BE COMPATIBLE WITH GASOLINE, GASOLINE WITH 15% MTBE (METHYL TERTIARY–BUTYL ETHER), OR GASOLINE WITH 10% ETOH (ETHANOL). FIBERGLASS AND RESIN MUST EXTEND 1/2" BEYOND COVERAGE OF ADHESIVE.

*NOTE:
CONTRACTOR SHALL BE HELD RESPONSIBLE FOR PROPER INSTALLATION & PREPARATION PER MANUFACTURERS INSTRUCTIONS AND SHALL REINSTALL SUMPS IF HYDROSTATIC TESTING SHOWS LEAKING IN THIS AREA OF THE SUMP.

NOTE THE REQUIRED ORIENTATION OF THE SUMPS PRIOR TO BONDING SUMPS TO COLLARS
SUMPS MUST BE ORIENTED SUCH THAT THE FACE OF THE SUMP PANEL IS PARALLEL WITH ADJACENT TANK SUMP PANEL IN ORDER TO ACHIEVE THE 45° ANGLES REQUIRED TO ROUTE THE PIPING WHILE MAINTAINING THE DESIRED PERPENDICULAR ANGLE INTO THE SUMP.

G: ELEVATION & PLAN VIEW - TURBINE SIDE SUMP

SCALE: 1" = 1'-0"

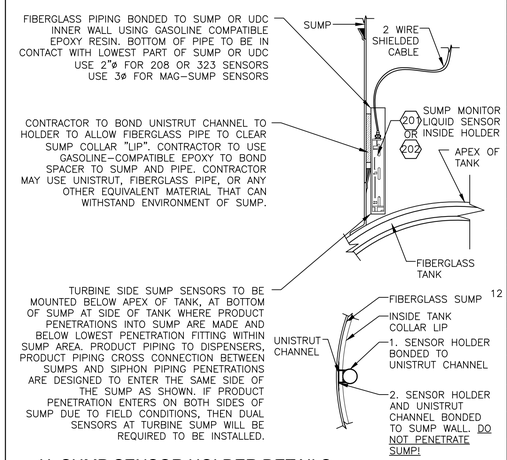

H: SUMP SENSOR HOLDER DETAILS

SCALE: 1" = 1'-0"

– NOTES

#	Note
1	SLOPE CONCRETE AWAY FROM ALL MANHOLES 1" RISE OVER 12" RUN
2	FIBER REINFORCEMENT TO BE USED. PRE–MIX UNIFORMLY THROUGHOUT CONCRETE.
3	REINFORCING BARS TO BE NO LESS THAN 2" AND NO MORE THAN 4" FROM SURFACE.
4	REINFORCE CONCRETE SLAB AROUND MANHOLE WITH 4–#4 REBAR TOP AND BOTTOM, 60" IN LENGTH. PLACE REBAR 6" FROM SIDES OF BOX.
5	SINGLE 1" CONDUIT TO EACH SUBMERSIBLE PUMP. PROVIDE SEAL OFF AT SUMP & BUILDING WIRING TROUGH SUMP. CONTAINS LINE VOLTAGE WIRING.
6	SINGLE 1" CONDUIT TO EACH TANK. LOOP FROM INTERSTITIAL SENSOR TO CONTAINMENT SUMPS & TANK GAUGE. PROVIDE SEAL–OFF IN BUILDING & TANK AREA. ROUTE TO INTRINSICALLY SAFE TROUGH IN BUILDING. CONTAINS ONLY LOW VOLTAGE WIRING FOR SENSORS.
7	PEA GRAVEL BACKFILL. ALL SUBSTITUTES MUST BE APPROVED BY MANUFACTURER AND OWNER'S FIELD REPRESENTATIVE.
8	PIPING SHALL BE LAID AND CONTINUOUSLY SUPPORTED ON A 6" COMPACTED PEA GRAVEL BEDDING. PIPING SHALL NOT BE SUPPORTED BY BLOCKS, PLANKS, OR OTHER DEBRIS.
9	ALL ENTRIES TO BE PERPENDICULAR TO CONTAINMENT SUMP. FOLLOW MANUFACTURER'S INSTALLATION INSTRUCTIONS FOR MAXIMUM ANGLE ALLOWANCE.
10	PLYWOOD 48" X 48" X 3/4" PLACED TO ASSURE 2" CLEARANCE BETWEEN CONCRETE AND CONTAINMENT SUMP.
11	N.O.V. RED THREAD PENETRATION FITTINGS SHOWN. ALTERNATE FITTINGS MAY NOT BE USED.
12	NOT USED
13	FIBRELITE MANHOLE LID SHOWN ALTERNATE OPW CONQUISTADOR ONLY IF APPROVED BY BP ENGINEER.
14	NOT USED
15	NO SECURITY PIN IS REQUIRED IN MOUNTING TUBE.

(XX) NOTE:
INDICATES ITEMS FOUND ON MATERIALS LIST SHEETS M.5.1.01 & M.5.1.02

CLIENT: bp

ARCO
BP WEST COAST PRODUCTS, LLC

Barghausen Consulting Engineers, Inc.
18215 72nd Avenue South
Kent, WA 98032
425.251.6222
barghausen.com

NO.	DATE	REVISION DESCRIPTION
1	10/04/23	PERMIT RELEASE
2		
3		
4		
5		
6		
7		
8		
9		
10		
11		
12		

SEAL: HAL P. GRUBB, STATE OF WASHINGTON, 23975, REGISTERED PROFESSIONAL ENGINEER
10/4/2023

DEVELOPMENT INFORMATION:
ARCO NTI
3400 am/pm
FUEL CANOPY w/ 6 MPD's

SITE ADDRESS:
SWC S MERIDIAN
@ HIGHWAY 512
PUYALLUP, WASHINGTON

FACILITY #TBD

DESIGNED BY:	NP/RF	ALLIANCE ZADM:	
CHECKED BY:	OV	BP REPM:	
DRAWN BY:	NP/RF	ALLIANCE PM:	
VERSION:	V-15.0 01/01/2023	PROJECT NO:	21730

DRAWING TITLE:
SINGLE UST GASOLINE TANK SUMP FITTING DETAILS

SHEET NO:
M.5.1.30

P:\21000s\21730\mechanical\tanks\21730 M.5.1.30.dwg 10/2/2023 2:29 PM NPHAN

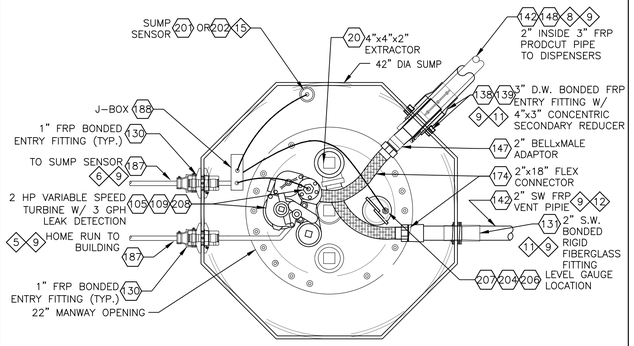

NOTE: IST PUMP CONTROLS ARE TIED TO VEEDER ROOT TLS-350.

A: PLAN VIEW - DIESEL PUMP

SCALE: 1" = 1'-0"

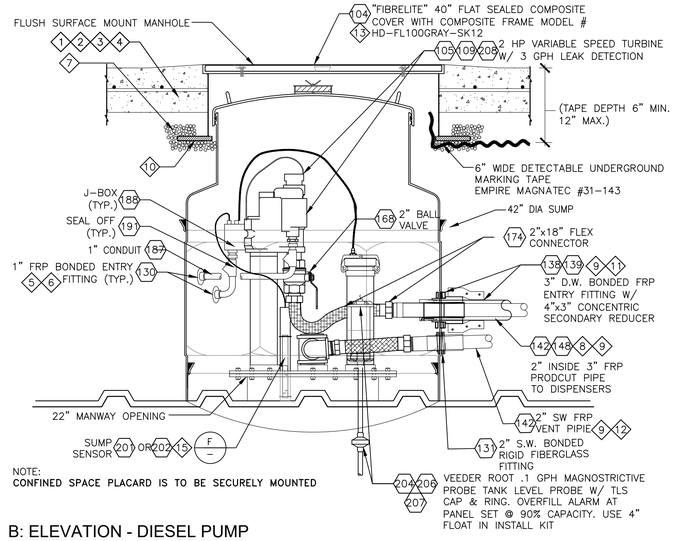

NOTE:
CONFINED SPACE PLACARD IS TO BE SECURELY MOUNTED

B: ELEVATION - DIESEL PUMP

SCALE: 1" = 1'-0"

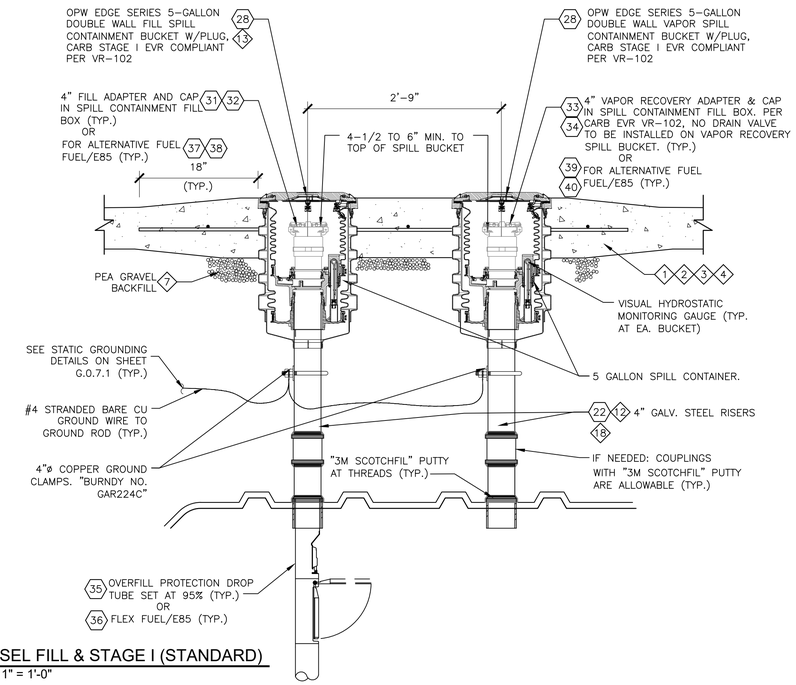

E: DIESEL FILL & STAGE I (STANDARD)

SCALE: 1" = 1'-0"

PRODUCT SYMBOLOGY

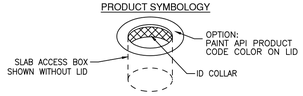

API COLOR-SYMBOL SYSTEM FOR PRODUCT IDENTIFICATION

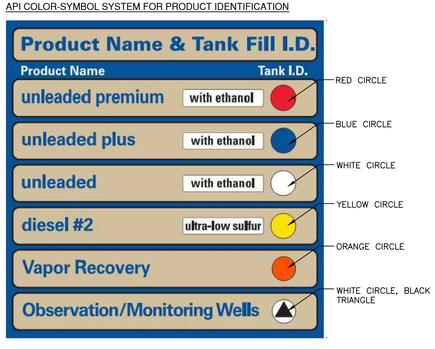

REF: API 1637 - PRODUCT SYMBOLS

NOTE: THE ABOVE SYMBOLS REPRESENT INDUSTRY GUIDELINES FOR PRODUCT IDENTIFICATION. CONSULT LOCAL DISTRIBUTION MANAGER FOR LOCAL METHOD OF PRODUCT IDENTIFICATION TO BE USED.

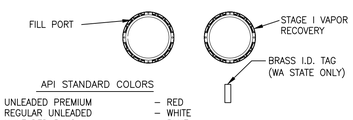

API STANDARD COLORS

UNLEADED PREMIUM	– RED
REGULAR UNLEADED	– WHITE
UNLEADED PLUS	– BLUE
VAPOR RECOVERY	– ORANGE
ULTRA LOW SULFUR DIESEL	– YELLOW

ACCESS COVER IDENTIFICATION
STANDARD FILL\VAPOR

SCALE: NONE

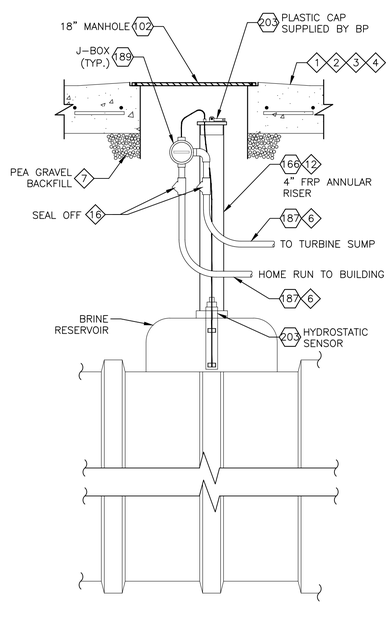

D: ELEVATION - INTERSTITIAL SPACE MONITOR

SCALE: 3/4" = 1'-0"

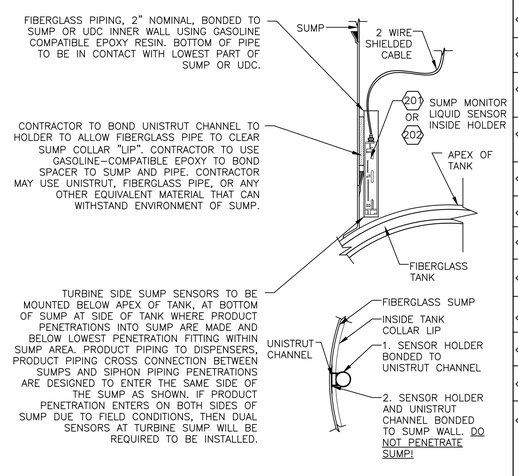

F: SUMP SENSOR HOLDER DETAILS

SCALE: 1" = 1'-0"

#	– NOTES
1	SLOPE CONCRETE AWAY FROM ALL MANHOLES 1" RISE OVER 12" RUN
2	FIBER REINFORCEMENT TO BE USED. PRE-MIX UNIFORMLY THROUGHOUT CONCRETE.
3	REINFORCING BARS TO BE NO LESS THAN 2" AND NO MORE THAN 4" FROM SURFACE.
4	REINFORCE CONCRETE SLAB AROUND MANHOLE WITH 4-#4 REBAR 60" IN LENGTH. PLACE REBAR 6" FROM SIDES OF BOX.
5	SINGLE 1" CONDUIT TO EACH SUBMERSIBLE PUMP. PROVIDE SEAL OFF AT BUILDING WIRING TROUGH SUMP. CONTAINS LINE VOLTAGE WIRING.
6	SINGLE 1" CONDUIT TO EACH TANK. LOOP HOME RUN FROM INTERSTITIAL SENSOR LOCATION TO CONTAINMENT SUMP SENSORS & TANK GAUGES. PROVIDE SEAL-OFF IN BUILDING & AT TANK. ROUTE TO INTRINSICALLY SAFE TROUGH IN BUILDING. CONTAINS ONLY LOW VOLTAGE WIRING FOR SENSORS.
7	PEA GRAVEL BACKFILL. ALL SUBSTITUTES MUST BE APPROVED BY MANUFACTURER AND OWNER'S FIELD REPRESENTATIVE.
8	PIPING SHALL BE LAID AND CONTINUOUSLY SUPPORTED ON A 6" COMPACTED PEA GRAVEL BEDDING. PIPING SHALL NOT BE SUPPORTED BY BLOCKS, PLANKS, OR OTHER DEBRIS.
9	ALL ENTRIES TO BE PERPENDICULAR TO CONTAINMENT SUMP. FOLLOW MANUFACTURER'S INSTALLATION INSTRUCTIONS FOR MAXIMUM ANGLE ALLOWANCE.
10	PLYWOOD 48" X 48" X 3/4" PLACED TO ASSURE 2" CLEARANCE BETWEEN CONCRETE AND CONTAINMENT SUMP.
11	N.O.V. RED THREAD IIA PENETRATION FITTINGS SHOWN. ALTERNATE FITTINGS MAY NOT BE USED.
12	REAM ALL RISERS FOR FULL PIPE BORE IF REQUIRED.
13	INSTALL TANK ID MARKERS IN THE SPILL CONTAINMENT MANHOLES. COVERS SHALL BE PRIMED AND PAINTED ACCORDING TO SPECIFICATIONS.
14	SECONDARY CONTAINMENT FOR ALL VENT AND STAGE II VAPOR RECOVERY PIPING ONLY WHEN REQUIRED BY LOCAL JURISDICTION.
15	COAT ALL BURIED GALVANIZED STEEL PIPING WITH COAL TAR EPOXY.
16	SEAL OFF REQUIRED ONLY AT FIRST SUMP HOME RUN FROM VEEDER ROOT PANEL.
17	OVERFLOW PROTECTION: UST OVERFLOW COMPLIANCE IS ACHIEVED BY USE OF OVERFLOW PREVENTION DROP TUBE FLAPPER VALVE SET AT 95% AND IS IN ACCORDANCE WITH FEDERAL AND STATE GUIDELINES FOR UST OVERFILL REQUIREMENTS. AN OVERFILL ALARM AND ACKNOWLEDGE SWITCH TIED INTO THE VEEDER ROOT AUTOMATIC TANK GAUGE SYSTEM. THE MONITORING SYSTEM PROVIDES AN AUDIBLE AND VISUAL ALARM WHEN THE TANK(S) ARE FILLED TO THE 90% LEVEL.
18	FIELD COATING AND WRAPPING ALL RISERS AND STATIC GROUND CONNECTIONS WITH 3M SCOTCHRAP PIPE PRIMER & 3M TEMFLEX 10 MIL TAPE OR CONTRACTOR MAY USE 10 MIL SELF-PRIME PROSELECT PIPE WRAP TAPE.

NOTE:
XX INDICATES ITEMS FOUND ON MATERIALS LIST SHEETS M.5.1.01 & M.5.1.02

CLIENT:

bp

ARCO
BP WEST COAST PRODUCTS, LLC

Barghausen Consulting Engineers, Inc.
18215 72nd Avenue South
Kent, WA 98032
425.251.6222
barghausen.com

NO.	DATE	REVISION DESCRIPTION
1	10/04/23	PERMIT RELEASE
2		
3		
4		
5		
6		
7		
8		
9		
10		
11		
12		

SEAL:

HAL P. GRUBB
STATE OF WASHINGTON
23975
REGISTERED PROFESSIONAL ENGINEER
10/4/2023

DEVELOPMENT INFORMATION:

ARCO NTI
3400 am/pm
FUEL CANOPY w/ 6 MPD's

SITE ADDRESS:

SWC S MERIDIAN
@ HIGHWAY 512
PUYALLUP, WASHINGTON

FACILITY #TBD

DESIGNED BY:	NP/RF	ALLIANCE ZADM:	
CHECKED BY:	OV	BP REPM:	
DRAWN BY:	NP/RF	ALLIANCE PM:	
VERSION:	V-15.0 01/01/2023	PROJECT NO:	21730

DRAWING TITLE:

DIESEL TANK SUMP AND FITTING INSTALLATION DETAILS (STANDARD OPW)

SHEET NO:

M.5.1.33

P:\210100s\21730\mechanical\tank\21730 M.5.1.33 & M.5.1.34.dwg 10/2/2023 2:33 PM NPHAN

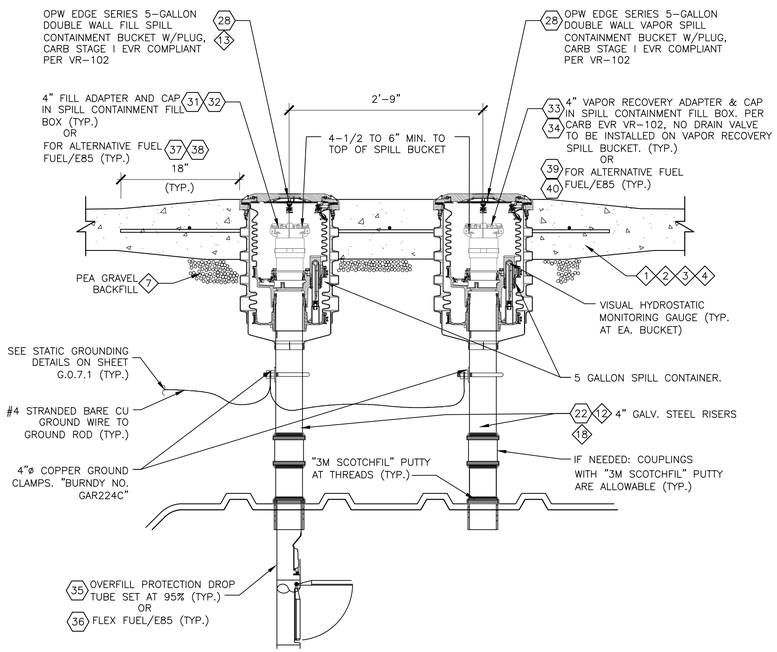

A: ELEVATION - GASOLINE FILL & STAGE I RISERS (STANDARD)

SCALE: 1" = 1'-0"

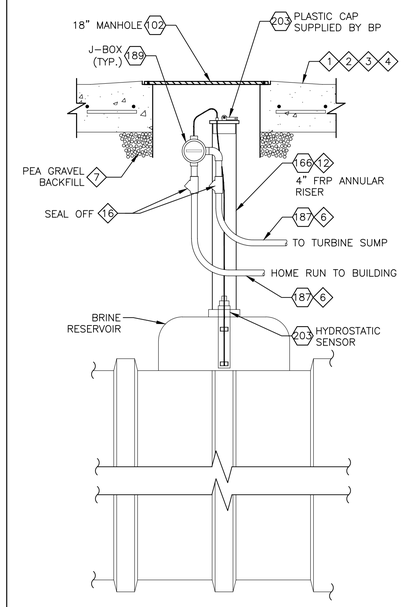

E: ELEVATION - INTERSTITIAL SPACE MONITOR

SCALE: 3/4" = 1'-0"

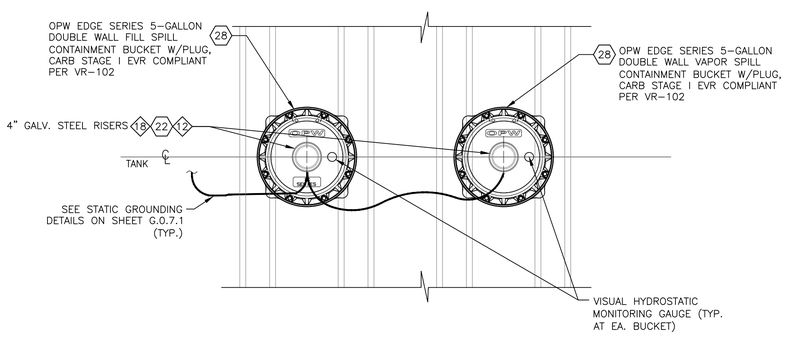

B: TYPICAL TANK TOP DETAIL AT FILL & STAGE I RISERS

SCALE: 1" = 1'-0"

PRODUCT SYMBOLOGY

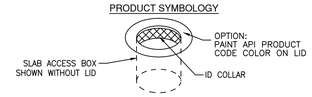

API COLOR-SYMBOL SYSTEM FOR PRODUCT IDENTIFICATION

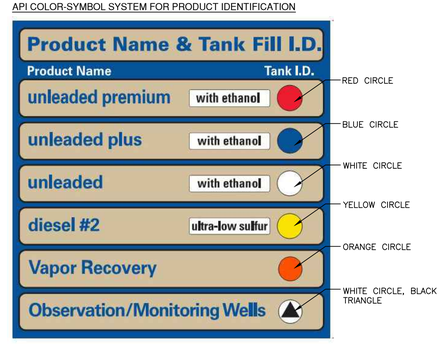

REF: API 1637 - PRODUCT SYMBOLS

NOTE: THE ABOVE SYMBOLS REPRESENT INDUSTRY GUIDELINES FOR PRODUCT IDENTIFICATION. CONSULT LOCAL DISTRIBUTION MANAGER FOR LOCAL METHOD OF PRODUCT IDENTIFICATION TO BE USED.

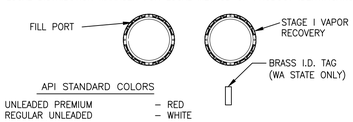

API STANDARD COLORS

UNLEADED PREMIUM	– RED
REGULAR UNLEADED	– WHITE
UNLEADED PLUS	– BLUE
VAPOR RECOVERY	– ORANGE
ULTRA LOW SULFUR DIESEL	– YELLOW

ACCESS COVER IDENTIFICATION
STANDARD FILL\VAPOR

SCALE: NONE

– NOTES

1. SLOPE CONCRETE AWAY FROM ALL MANHOLES 1" RISE OVER 12" RUN
2. FIBER REINFORCEMENT TO BE USED. PRE-MIX UNIFORMLY THROUGHOUT CONCRETE.
3. REINFORCING BARS TO BE NO LESS THAN 2" AND NO MORE THAN 4" FROM SURFACE.
4. REINFORCE CONCRETE SLAB AROUND MANHOLE WITH 4-#4 REBAR 60" IN LENGTH. PLACE REBAR 6" FROM SIDES OF BOX.
5. SINGLE 1" CONDUIT TO EACH SUBMERSIBLE PUMP. PROVIDE SEAL OFF AT BUILDING WIRING TROUGH SUMP. CONTAINS LINE VOLTAGE WIRING.
6. SINGLE 1" CONDUIT TO EACH TANK. LOOP HOME RUN FROM INTERSTITIAL SENSOR LOCATION TO CONTAINMENT SUMP SENSORS & TANK GAUGES. PROVIDE SEAL-OFF IN BUILDING & AT TANK. ROUTE TO INTRINSICALLY SAFE TROUGH IN BUILDING. CONTAINS ONLY LOW VOLTAGE WIRING FOR SENSORS.
7. PEA GRAVEL BACKFILL. ALL SUBSTITUTES MUST BE APPROVED BY MANUFACTURER AND OWNER'S FIELD REPRESENTATIVE.
8. PIPING SHALL BE LAID AND CONTINUOUSLY SUPPORTED ON A 6" COMPACTED PEA GRAVEL BEDDING. PIPING SHALL NOT BE SUPPORTED BY BLOCKS, PLANKS, OR OTHER DEBRIS.
9. ALL ENTRIES TO BE PERPENDICULAR TO CONTAINMENT SUMP. FOLLOW MANUFACTURER'S INSTALLATION INSTRUCTIONS FOR MAXIMUM ANGLE ALLOWANCE.
10. PLYWOOD 48" X 48" X 3/4" PLACED TO ASSURE 2" CLEARANCE BETWEEN CONCRETE AND CONTAINMENT SUMP.
11. SMITH FIBERCAST PENETRATION FITTINGS SHOWN. ALTERNATE FITTINGS MAY NOT BE USED.
12. REAM ALL RISERS FOR FULL PIPE BORE IF REQUIRED.
13. INSTALL TANK ID MARKERS IN THE SPILL CONTAINMENT MANHOLES. COVERS SHALL BE PRIMED AND PAINTED ACCORDING TO SPECIFICATIONS.
14. SECONDARY CONTAINMENT FOR ALL VENT AND STAGE II VAPOR RECOVERY PIPING ONLY WHEN REQUIRED BY LOCAL JURISDICTION.
15. COAT ALL BURIED GALVANIZED STEEL PIPING WITH COAL TAR EPOXY.
16. SEAL OFF REQUIRED ONLY AT FIRST SUMP HOME RUN FROM VEEDER ROOT PANEL.
17. OVERFLOW PROTECTION: UST OVERFLOW COMPLIANCE IS ACHIEVED BY USE OF OVERFLOW PREVENTION DROP TUBE FLAPPER VALVE SET AT 95% AND IS IN ACCORDANCE WITH FEDERAL AND STATE GUIDELINES FOR UST OVERFILL REQUIREMENTS.

    AN OVERFILL ALARM AND ACKNOWLEDGE SWITCH TIED INTO THE VEEDER ROOT AUTOMATIC TANK GAUGE SYSTEM. THE MONITORING SYSTEM PROVIDES AN AUDIBLE AND VISUAL ALARM WHEN THE TANK(S) ARE FILLED TO THE 90% LEVEL.
18. FIELD COATING AND WRAPPING ALL RISERS AND STATIC GROUND CONNECTIONS WITH 3M SCOTCHRAP PIPE PRIMER & 3M TEMFLEX 10 MIL TAPE OR CONTRACTOR MAY USE 10 MIL SELF-PRIME PROSELECT PIPE WRAP TAPE.

NOTE:
XX INDICATES ITEMS FOUND ON MATERIALS LIST SHEETS M.5.1.01 & M.5.1.02

CLIENT:

bp

ARCO

BP WEST COAST PRODUCTS, LLC

Barghausen Consulting Engineers, Inc.

18215 72nd Avenue South
Kent, WA 98032
425.251.6222
barghausen.com

NO.	DATE	REVISION DESCRIPTION
1	10/04/23	PERMIT RELEASE
2		
3		
4		
5		
6		
7		
8		
9		
10		
11		
12		

SEAL:

HAL P. GRUBB — STATE OF WASHINGTON — 23975 — REGISTERED PROFESSIONAL ENGINEER

10/4/2023

DEVELOPMENT INFORMATION:

ARCO NTI
3400 am/pm
FUEL CANOPY w/ 6 MPD's

SITE ADDRESS:

SWC S MERIDIAN
@ HIGHWAY 512
PUYALLUP, WASHINGTON

FACILITY #TBD

DESIGNED BY:	NP/RF	ALLIANCE Z&DM:	
CHECKED BY:	OV	BP REPM:	
DRAWN BY:	NP/RF	ALLIANCE PM:	
VERSION:	V-15.0 01/01/2023	PROJECT NO:	21730

DRAWING TITLE:

FILL /VAPOR II INSTALLATION DETAILS (STANDARD OPW)

SHEET NO:

M.5.1.34

P:\21000s\21730\mechanical\tanks\21730 M.5.1.33 & M.5.1.34.dwg 10/2/2023 2:33 PM NPHAN

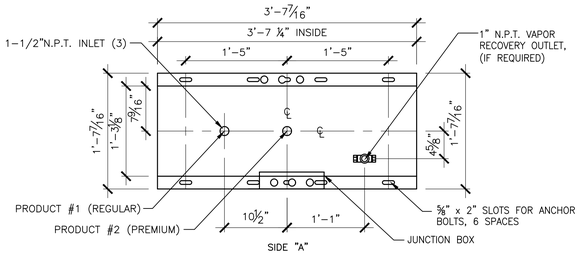

DISPENSERS SHALL BE MOUNTED PER MANUFACTURER'S INSTALLATION INSTRUCTIONS. 6 BOLTS REQUIRED.

A–A DISPENSER MOUNTING DIAGRAM
SCALE: 1"=1'-0"

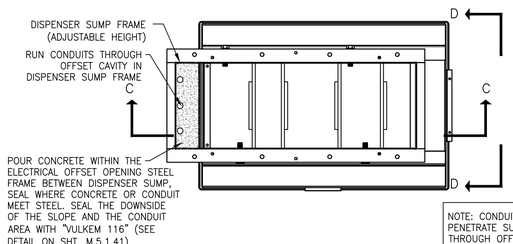

NOTE: CONDUITS SHALL NOT PENETRATE SUMP. ROUTE THROUGH OFFSET FRAME CAVITY. DO NOT CUT SIDE PANELS OF DISPENSER

B–B DISPENSER CONTAINMENT SUMP PLAN VIEW
SCALE: 1" = 1'-0"

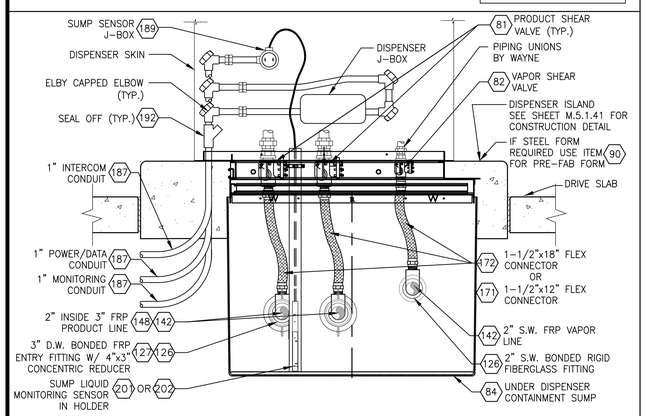

C–C: FRONT VIEW SECTION DETAIL @ DISPENSER SUMP
SCALE: 1"=1'-0"

ADA COMPLIANCE NOTE:
WHEN DISPENSERS ARE INSTALLED AS SHOWN ON THIS DRAWING, THE REQUIREMENTS REGARDING HANDICAPPED VERTICAL AND HORIZONTAL ACCESSIBILITY ARE FULLY MET.

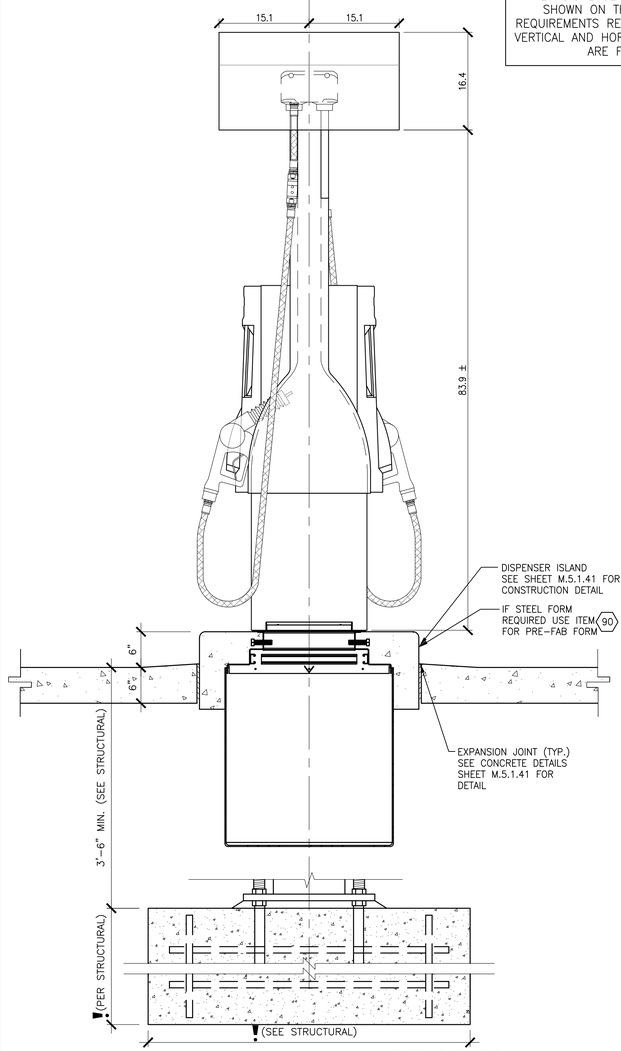

DISPENSER AT ISLAND INSTALLATION DETAILS SIDE ELEVATION
SCALE: 1" = 1'-0"

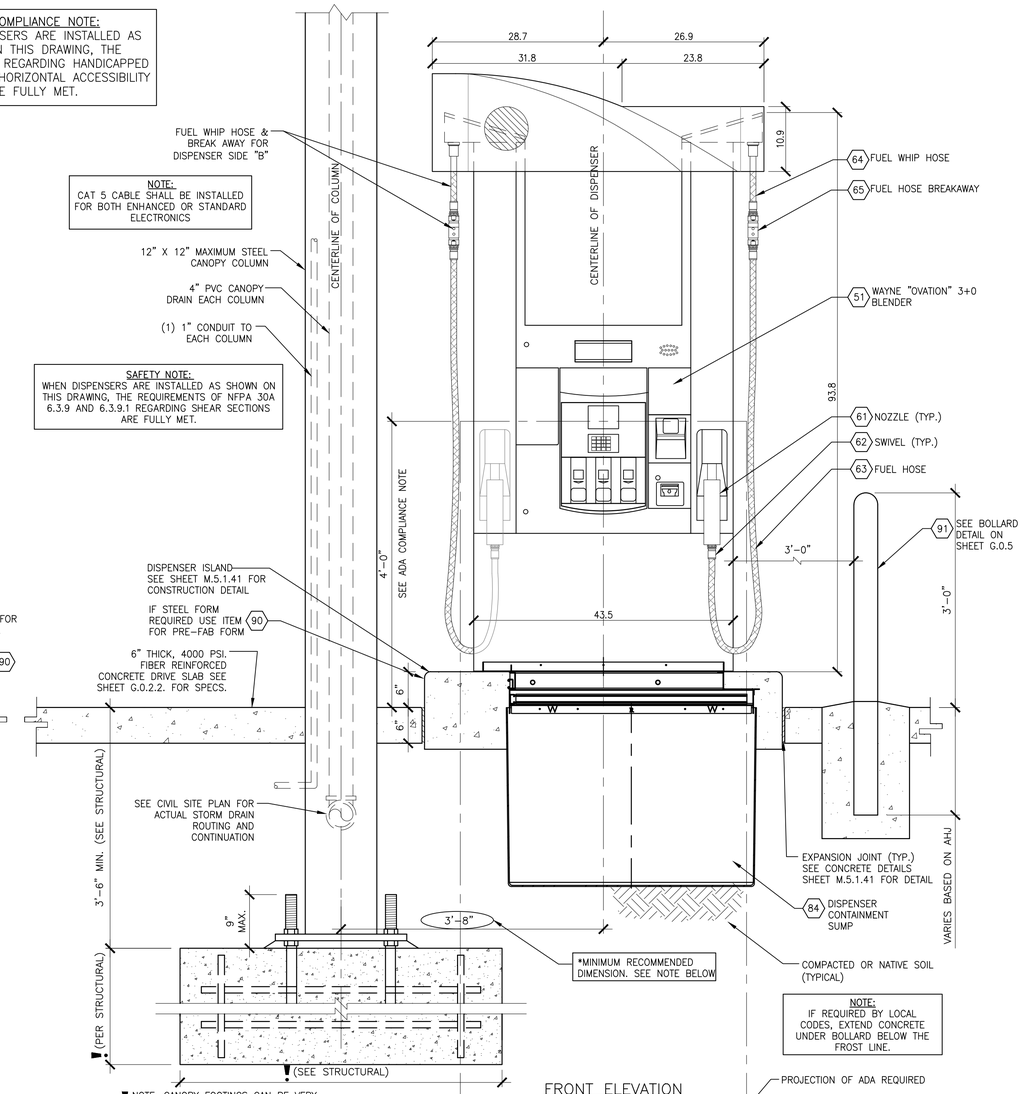

NOTE: CANOPY FOOTINGS CAN BE VERY LARGE AND CAN VARY IN SIZES. SEE STRUCTURAL DRAWINGS.

FRONT ELEVATION

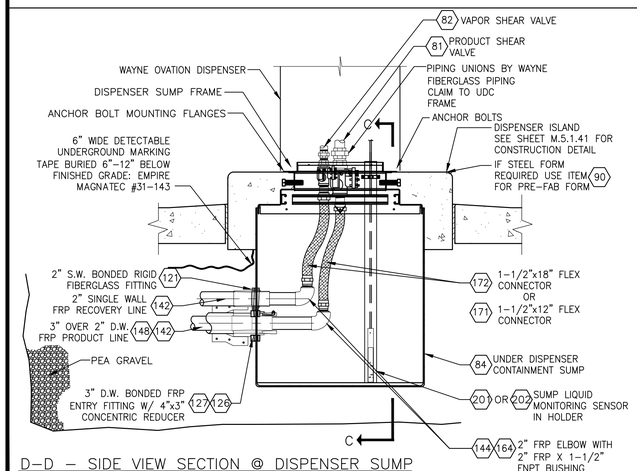

D–D – SIDE VIEW SECTION @ DISPENSER SUMP
SCALE: 1"=1'-0"

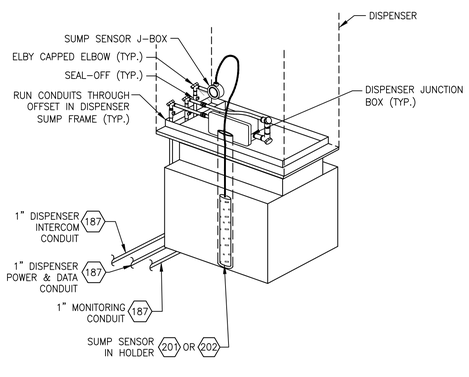

DISPENSER CONTAINMENT SUMP CONDUIT ROUTING DETAIL
SCALE: NONE

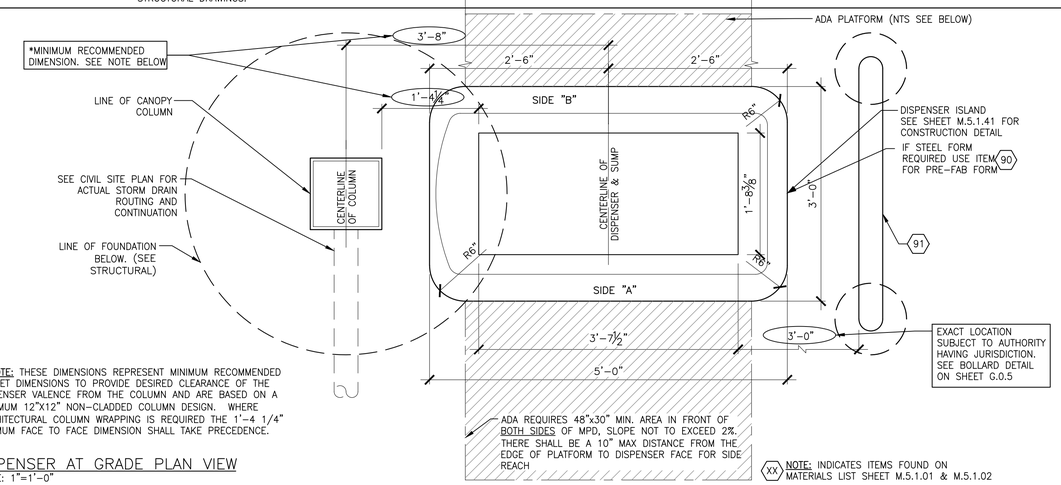

* NOTE: THESE DIMENSIONS REPRESENT MINIMUM RECOMMENDED OFFSET DIMENSIONS TO PROVIDE DESIRED CLEARANCE OF THE DISPENSER VALENCE FROM THE COLUMN AND ARE BASED ON A MAXIMUM 12"X12" NON-CLADDED COLUMN DESIGN. WHERE ARCHITECTURAL COLUMN WRAPPING IS REQUIRED THE 1'-4 1/4" MINIMUM FACE TO FACE DIMENSION SHALL TAKE PRECEDENCE.

DISPENSER AT GRADE PLAN VIEW
SCALE: 1"=1'-0"

(XX) NOTE: INDICATES ITEMS FOUND ON MATERIALS LIST SHEET M.5.1.01 & M.5.1.02

CLIENT: bp

ARCO
BP WEST COAST PRODUCTS, LLC

Barghausen Consulting Engineers, Inc.
18215 72nd Avenue South
Kent, WA 98032
425.251.6222
barghausen.com

NO.	DATE	REVISION DESCRIPTION
1	10/04/23	PERMIT RELEASE
2		
3		
4		
5		
6		
7		
8		
9		
10		
11		
12		

SEAL:

HAL P. GRUBB — STATE OF WASHINGTON — 23975 — REGISTERED PROFESSIONAL ENGINEER
10/4/2023

DEVELOPMENT INFORMATION:
ARCO NTI
3400 am/pm
FUEL CANOPY w/ 6 MPD's

SITE ADDRESS:
SWC S MERIDIAN
@ HIGHWAY 512
PUYALLUP, WASHINGTON

FACILITY #TBD

DESIGNED BY:	NP/RF	ALLIANCE Z&DM:	
CHECKED BY:	OV	BP REPM:	
DRAWN BY:	NP/RF	ALLIANCE PM:	
VERSION:	V-15.0	PROJECT NO:	21730
	01/01/2023		

DRAWING TITLE:
DISPENSER DETAILS: WAYNE OVATION (3+0) BLEND DISPENSER INSTALLATION DETAILS ON ISLANDS (S.W. VAPOR)

SHEET NO:
M.5.1.38

P:\21000s\21730\mechanical\bmks\21730 M.5.1.38 & M.5.1.40.dwg 10/2/2023 2:34 PM NPHAN

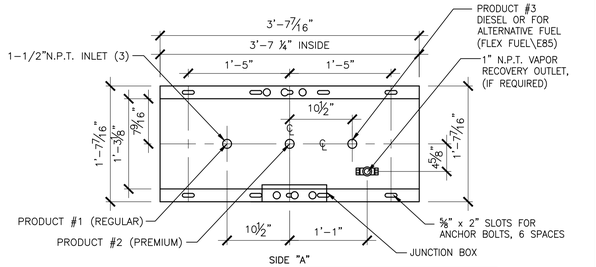

DISPENSERS SHALL BE MOUNTED PER MANUFACTURER'S INSTALLATION INSTRUCTIONS. 6 BOLTS REQUIRED.

A–A DISPENSER MOUNTING DIAGRAM
SCALE: 1"=1'-0"

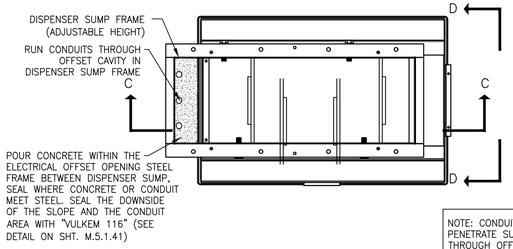

NOTE: CONDUITS SHALL NOT PENETRATE SUMP. ROUTE THROUGH OFFSET FRAME CAVITY. DO NOT CUT SIDE PANELS OF DISPENSER

B–B DISPENSER CONTAINMENT SUMP PLAN VIEW
SCALE: 1" = 1'-0"

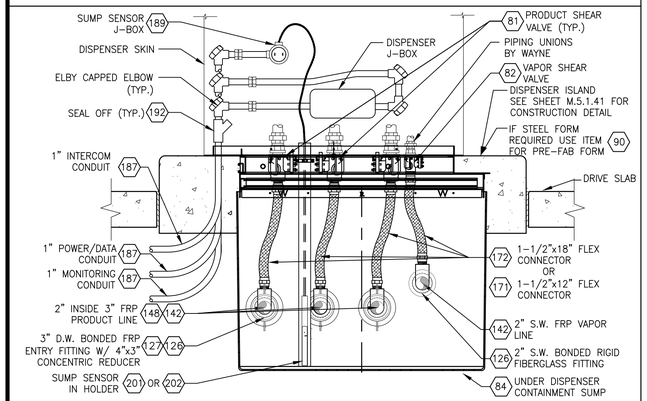

C–C: FRONT VIEW SECTION DETAIL @ DISPENSER SUMP
SCALE: 1"=1'-0"

ADA COMPLIANCE NOTE:
WHEN DISPENSERS ARE INSTALLED AS SHOWN ON THIS DRAWING, THE REQUIREMENTS REGARDING HANDICAPPED VERTICAL AND HORIZONTAL ACCESSIBILITY ARE FULLY MET.

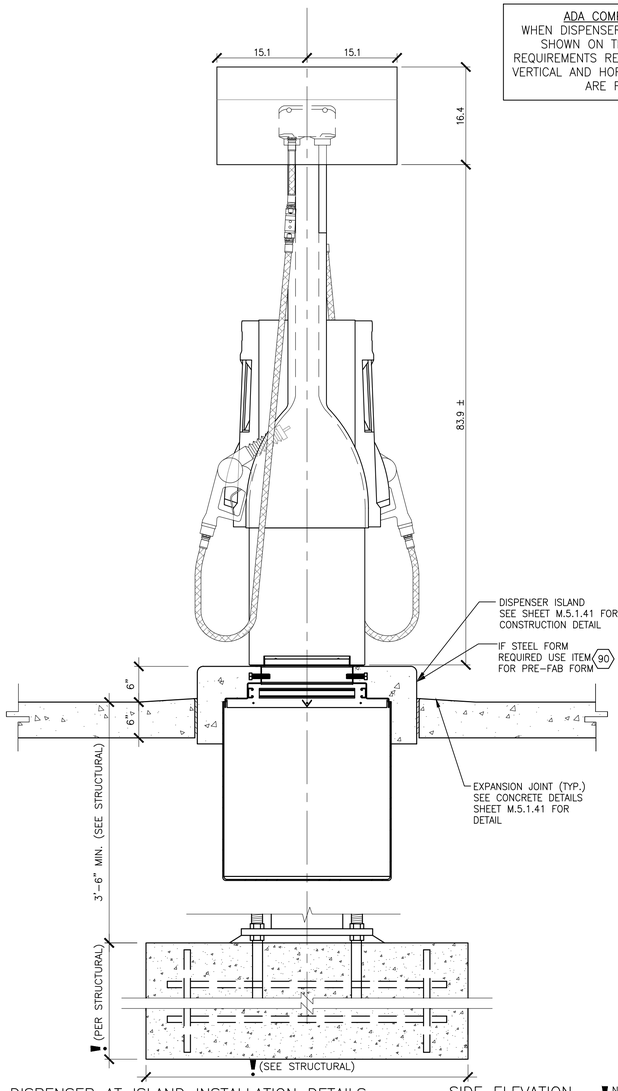

DISPENSER AT ISLAND INSTALLATION DETAILS
SCALE: 1" = 1'-0"

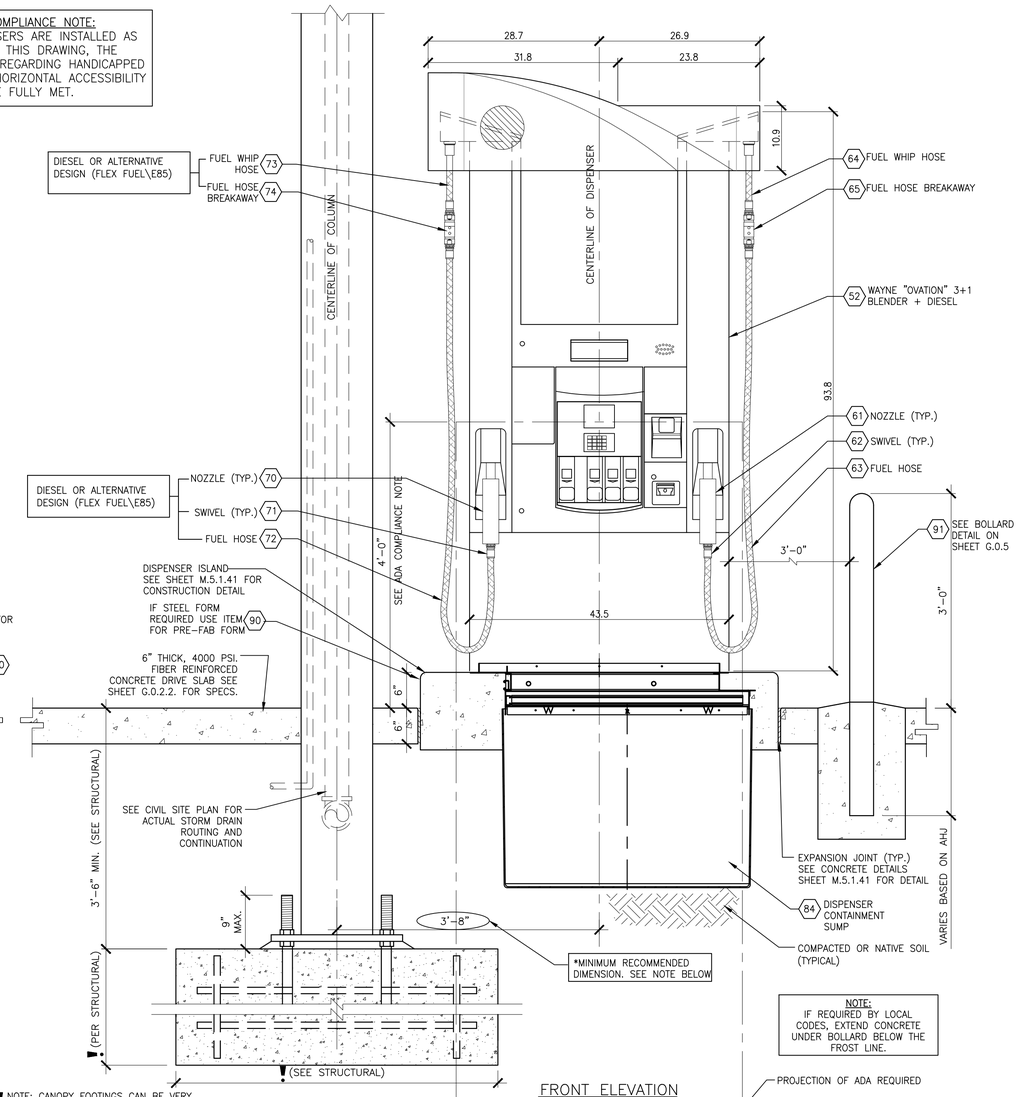

NOTE:
IF REQUIRED BY LOCAL CODES, EXTEND CONCRETE UNDER BOLLARD BELOW THE FROST LINE.

SIDE ELEVATION

FRONT ELEVATION

! NOTE: CANOPY FOOTINGS CAN BE VERY LARGE AND CAN VARY IN SIZES. SEE STRUCTURAL DRAWINGS.

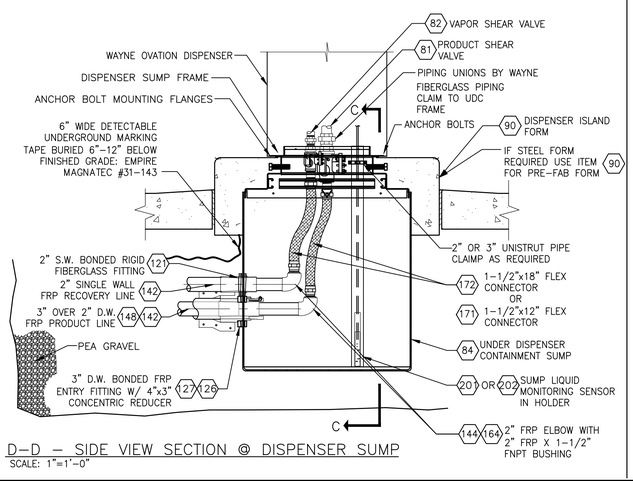

D–D – SIDE VIEW SECTION @ DISPENSER SUMP
SCALE: 1"=1'-0"

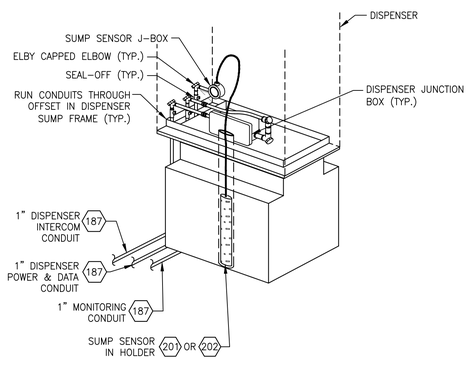

DISPENSER CONTAINMENT SUMP CONDUIT ROUTING DETAIL
SCALE: NONE

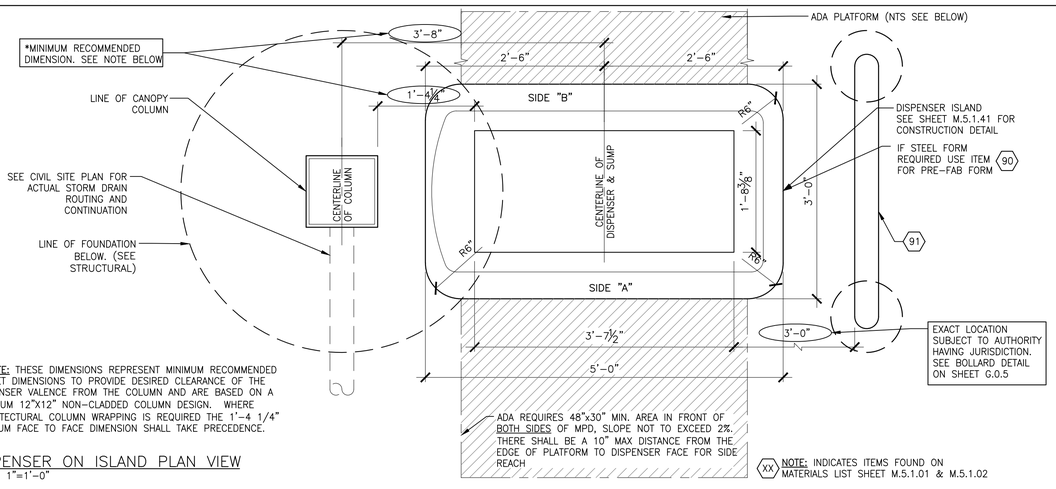

* NOTE: THESE DIMENSIONS REPRESENT MINIMUM RECOMMENDED OFFSET DIMENSIONS TO PROVIDE DESIRED CLEARANCE OF THE DISPENSER VALENCE FROM THE COLUMN AND ARE BASED ON A MAXIMUM 12"X12" NON-CLADDED COLUMN DESIGN. WHERE ARCHITECTURAL COLUMN WRAPPING IS REQUIRED THE 1'-4 1/4" MINIMUM FACE TO FACE DIMENSION SHALL TAKE PRECEDENCE.

ADA REQUIRES 48"x30" MIN. AREA IN FRONT OF BOTH SIDES OF MPD, SLOPE NOT TO EXCEED 2%. THERE SHALL BE A 10" MAX DISTANCE FROM THE EDGE OF PLATFORM TO DISPENSER FACE FOR SIDE REACH

DISPENSER ON ISLAND PLAN VIEW
SCALE: 1"=1'-0"

(XX) NOTE: INDICATES ITEMS FOUND ON MATERIALS LIST SHEET M.5.1.01 & M.5.1.02

CLIENT:

bp

ARCO
BP WEST COAST PRODUCTS, LLC

Barghausen Consulting Engineers, Inc.
18215 72nd Avenue South
Kent, WA 98032
425.251.6222
barghausen.com

NO.	DATE	REVISION DESCRIPTION
1	10/04/23	PERMIT RELEASE
2		
3		
4		
5		
6		
7		
8		
9		
10		
11		
12		

SEAL:

HAL P. GRUBB
STATE OF WASHINGTON
23975
REGISTERED PROFESSIONAL ENGINEER
10/4/2023

DEVELOPMENT INFORMATION:

ARCO NTI
3400 am/pm FUEL CANOPY w/ 6 MPD's

SITE ADDRESS:

SWC S MERIDIAN
@ HIGHWAY 512
PUYALLUP, WASHINGTON

FACILITY #TBD

DESIGNED BY:	NP/RF	ALLIANCE Z&DM:	
CHECKED BY:	OV	BP REPM:	
DRAWN BY:	NP/RF	ALLIANCE PM:	
VERSION:	V-15.0 01/01/2023	PROJECT NO:	21730

DRAWING TITLE:

DISPENSER DETAILS: WAYNE OVATION (3+1) BLENDING DISPENSER INSTALLATION DETAILS ON ISLAND (S.W. VAPOR)

SHEET NO:

M.5.1.40

P:\21000s\21730\mechanical\bims\21730 M.5.1.38 & M.5.1.40.dwg 10/2/2023 2:34 PM NPHAN

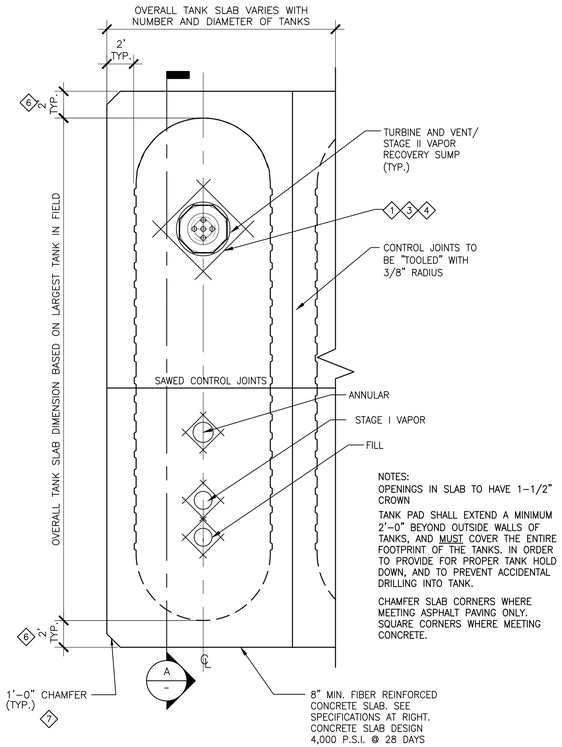

TYPICAL TANK SLAB REINFORCING

Concrete Slab Specifications

STANDARD:

1. CONCRETE SLAB OVER TANKS WITH A MINIMUM 8" THICK FIBER REINFORCEMENT TO BE USED. REINFORCE CONCRETE SLAB AROUND MANHOLES WITH (4) #4 REBAR, 60" IN LENGTH FOR THE LARGE MANHOLES AND 30" FOR SMALL MANHOLES PLACE REBAR 6" FROM SIDES OF BOX. SEE RECIPE BELOW.
2. CONCRETE DRIVE SLAB AT CANOPY FUELING AREA WITH A MINIMUM 6" THICK FIBER REINFORCED CONCRETE TO BE USED. SEE RECIPE BELOW.
3. CONCRETE FORMLESS ISLAND WITH A 6" HEIGHT ABOVE FINISHED GRADE FIBER REINFORCED CONCRETE TO BE USED. SEE RECIPE BELOW.

CONCRETE MIX RECIPE. PREMIX UNIFORMLY THROUGHOUT CONCRETE. REINFORCEMENT BARS TO BE NO LESS THAN 2" AND NO MORE THAN 4" FROM SURFACE.
UNLESS OTHERWISE NOTED ON THESE DRAWINGS:

a. CONCRETE – REGULAR WEIGHT HARD ROCK CONCRETE (150 LBS/CU FT)
b. CEMENT – TYPE I/II, SULFATE RESISTANT
c. AGGREGATES – ASTM C33, (MAXIMUM SIZE 3/4 INCHES)
d. 28 DAY CONCRETE STRENGTH (f'c):
4,000 PSI – SLAB (DESIGN BASED ON 2,000 PSI NO SPECIAL INSPECTION REQUIRED)
e. SLUMP – 3"+ 1" – 4" MAXIMUM AT POINT OF PLACEMENT
f. SHRINKAGE – 0.05% MAXIMUM
g. ENTRAINED AIR RANGE – 2% TO 4%

CONCRETE SHALL BE NORMAL WEIGHT WITH A MIX OF 1 : 2 1/2 : 3 1/2, WITH A MAXIMUM 7 1/2 GALLONS OF WATER PER SACK. ADD 3.0 LB MACRO (STRUCTURAL) FIBER PER CU. YD. REINFORCING CONCRETE.

REINFORCING STEEL FOR TANK SUMP CAGES SHALL BE #4 REBAR.

MAINTAIN CONCRETE IN A MOIST CONDITION FOR AT LEAST 7 DAYS AFTER PLACEMENT.

PLACE CONCRETE DIRECTLY FROM TRUCK INTO FORMS. DO NOT PUMP CONCRETE UNLESS SPECIAL INSPECTION, IN ACCORDANCE WITH CHAPTER 3 OF THE IBC, IS PROVIDED.

SUBMIT MIX DESIGNS, WITH STRENGTH AND SHRINKAGE TEST RESULTS, TO OWNER'S ENGINEER AT LEAST 7 DAYS BEFORE PLACING CONCRETE.

CONSOLIDATE CONCRETE IN PLACE USING A MECHANICAL VIBRATOR.

BEFORE PLACING CONCRETE, SECURE REINFORCING STEEL, ANCHOR BOLTS, DOWELS, AND OTHER INSERTS IN POSITION TO PREVENT MOVEMENT.

MATERIALS AND WORKMANSHIP SHALL CONFORM TO A.C.I. – 318 (SPECIFICATIONS OF THE DESIGN AND PLACEMENT OF CONCRETE).

MANHOLE CROWNS:
ALL MANHOLE OPENINGS ON THE TANK SLAB SHALL BE INSTALLED WITH A 1-1/2" CROWN (1" RISE OVER 12" RUN) OF CONCRETE TO PREVENT WATER INTRUSION INTO THE MANHOLE. THE OWNER'S ENGINEER, THE BP PROJECT MANAGER WILL BE REQUIRED TO SIGN OFF ON THIS ITEM ON THE TANK INSTALLATION CHECKLIST.

PRODUCT IDENTIFICATION MARKINGS:
CONTRACTOR TO INSTALL PRODUCT IDENTIFICATION TAGS AT ALL MANHOLE OPENING PER SITE SPECIFIC DETAIL DRAWINGS.

#	NOTES: UST INSTALLATION
1	SLOPE CONCRETE AWAY FROM ALL MANHOLES 1" RISE OVER 12" RUN.
2	FIBER REINFORCEMENT TO BE USED. PREMIX UNIFORMLY THROUGHOUT CONCRETE.
3	REINFORCING BARS TO BE NO LESS THAN 2" AND NO MORE THAN 4" FROM SURFACE.
4	REINFORCE CONCRETE SLAB AROUND MANHOLES WITH (4) #4 REBAR 60" IN LENGTH FOR LARGE MANHOLES 30" FOR SMALL MANHOLES. PLACE REBAR 6" FROM SIDES OF BOX.
5	USE PEA GRAVEL CONSISTING OF NATURALLY ROUNDED AGGREGATE, MIN ⅜" & MAX OF ¾" IN SIZE, FREE OF CLAY, SLAG, CINDERS, OR DEBRIS. ALL SUBSTITUTES MUST BE APPROVED BY MANUFACTURER'S & OWNER'S FIELD REPRESENTATIVE.
6	TANK PAD MINIMUM 2'-0" OFF OUTSIDE WALLS OF TANKS, AND MUST COVER THE FOOTPRINT OF THE TANKS. REQUIRED TO PROVIDE FOR PROPER TANK HOLD DOWN, AND TO PREVENT ACCIDENTAL DRILLING INTO TANK.
7	CUT CORNER WHERE MEETING ASPHALT PAVING ONLY. SQUARE CORNERS WHERE MEETING CONCRETE.
8	SEE SITE SPECIFIC PLANS FOR ACTUAL TANK SIZES, PLACEMENT, AND ORIENTATION. FINAL SITE SPECIFIC TANK LAYOUTS SHALL BE APPROVED BY THE LOCAL DISTRIBUTION TERMINAL MANAGER OR HIS AGENT. FINAL LOCATION SIGN-OFF SHALL BE DOCUMENTED.

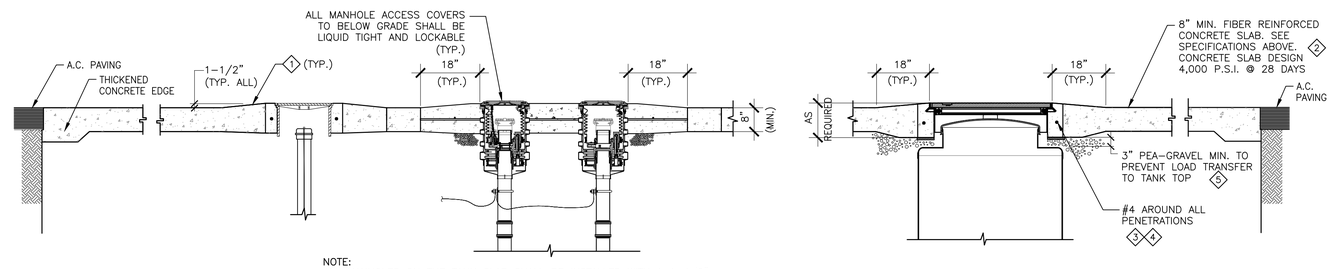

NOTE:
ALL MANHOLES ON THE TANK SLAB SHALL BE INSTALLED WITH A 1-1/2" CROWN OF CONCRETE TO PREVENT WATER INTRUSION INTO THE MANHOLE. THE OWNER'S ENGINEER WILL BE REQUIRED TO SIGN OFF ON THIS ITEM ON THE TANK INSTALLATION CHECKLIST BEFORE CONTRACTOR WILL BE PAID. CONTRACTOR WILL BE REQUIRED TO REINSTALL ENTIRE DRIVE SLAB AT OWN EXPENSE IF THIS DESIGN REQUIREMENT IS NOT MET.

A SLAB SECTION AT TANKS
SCALE: 1/2" = 1'-0"

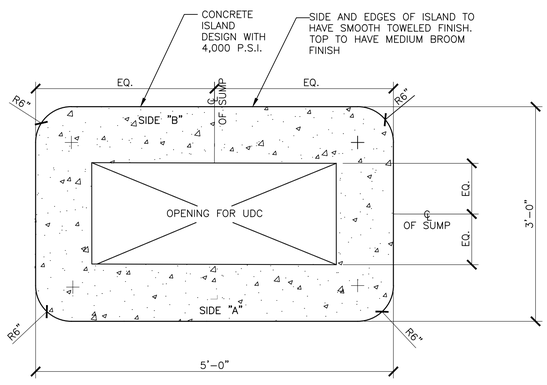

FORMLESS CONCRETE ISLAND PLAN VIEW
SCALE: 1"=1'-0"

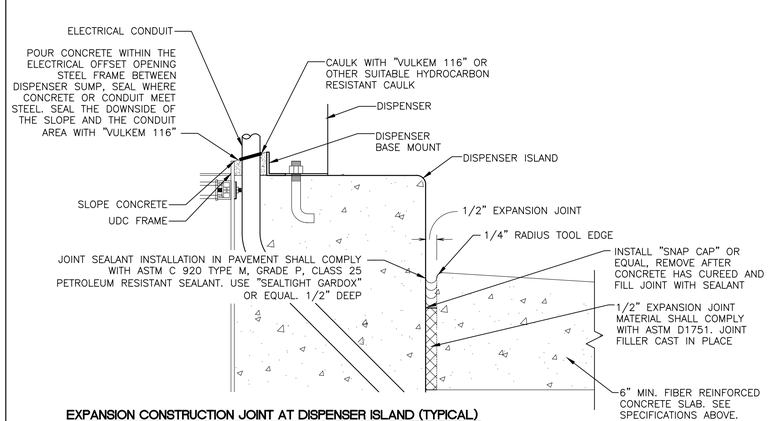

EXPANSION CONSTRUCTION JOINT AT DISPENSER ISLAND (TYPICAL)
SCALE: NTS

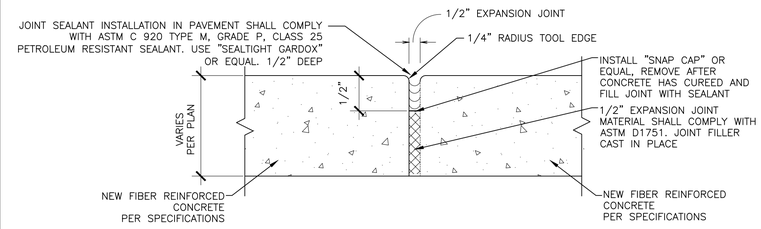

EXPANSION CONSTRUCTION JOINT AT NEW PAVEMENT (TYPICAL).
NOT TO SCALE

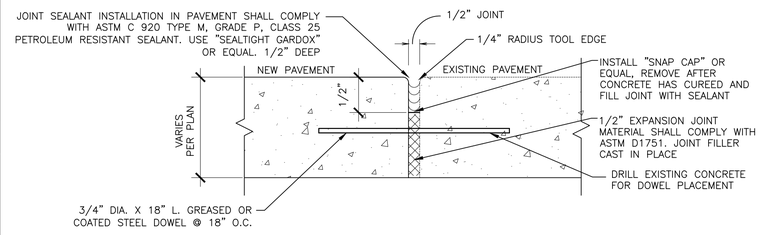

EXPANSION JOINT AT NEW AND EXISTING PAVEMENT (TYPICAL)
NOT TO SCALE

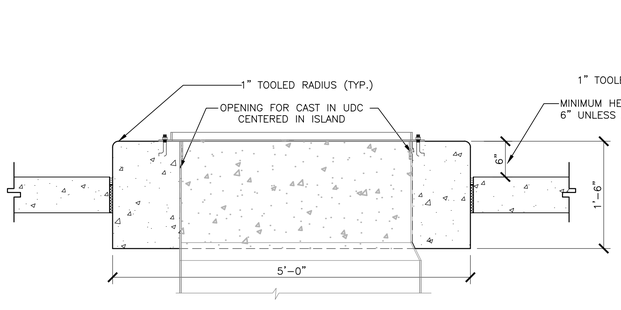

FORMLESS CONCRETE ISLAND 5'-0" SECTION
SCALE: 1"=1'-0"

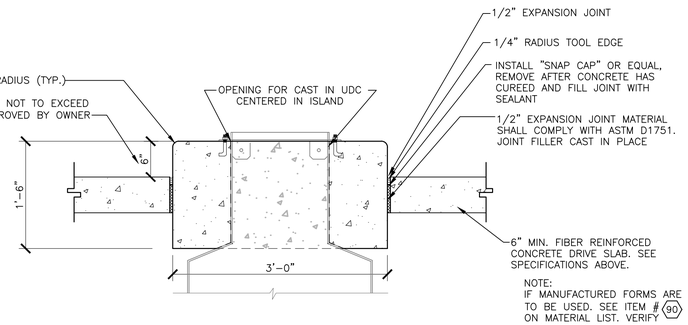

NOTE:
IF MANUFACTURED FORMS ARE TO BE USED. SEE ITEM # 90 ON MATERIAL LIST. VERIFY WITH CONSTRUCTION AND MAINTENANCE COORDINATOR.

FORMLESS CONCRETE USLAND 3'-0" SECTION
SCALE: 1"=1'-0"

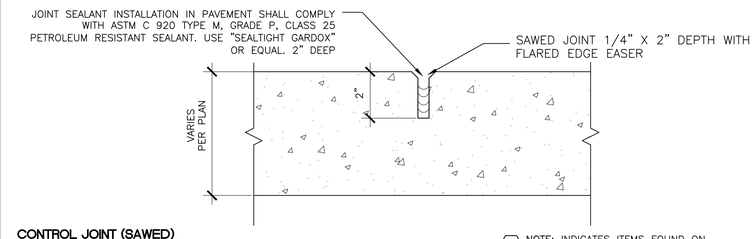

CONTROL JOINT (SAWED)
NOT TO SCALE

XX NOTE: INDICATES ITEMS FOUND ON MATERIALS LIST SHEET M.5.1.01 & M.5.1.02

CLIENT: bp

ARCO
BP WEST COAST PRODUCTS, LLC

Barghausen Consulting Engineers, Inc.
18215 72nd Avenue South
Kent, WA 98032
425.251.6222
barghausen.com

NO.	DATE	REVISION DESCRIPTION
1	10/04/23	PERMIT RELEASE
2		
3		
4		
5		
6		
7		
8		
9		
10		
11		
12		

SEAL: HAL P. GRUEBE, STATE OF WASHINGTON, 23975, REGISTERED PROFESSIONAL ENGINEER, 10/4/2023

DEVELOPMENT INFORMATION:
ARCO NTI
3400 am/pm FUEL CANOPY w/ 6 MPD's

SITE ADDRESS:
SWC S MERIDIAN
@ HIGHWAY 512
PUYALLUP, WASHINGTON

FACILITY #TBD

DESIGNED BY:	NP/RF	ALLIANCE Z&DM:	
CHECKED BY:	OV	BP REPM:	
DRAWN BY:	NP/RF	ALLIANCE PM:	
VERSION:	V-15.0 01/01/2023	PROJECT NO:	21730

DRAWING TITLE:
TANK SLAB CONCRETE SPECIFICATIONS AND IDENTIFICATION MARKING DETAILS

SHEET NO:
M.5.1.41

P:\21000s\21730\mechanical\tanks\21730 M.5.1.41.dwg 10/2/2023 2:36 PM NPHAN

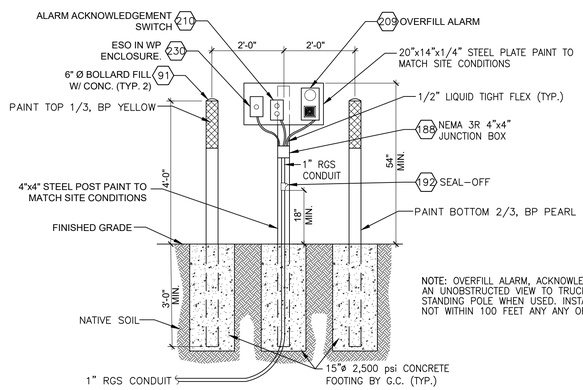

NOTE: OVERFILL ALARM, ACKNOWLEDGMENT SWITCH, AND ESO SHALL BE LOCATED TO PROVIDE AN UNOBSTRUCTED VIEW TO TRUCK DRIVER. PROVIDE BOLLARD PROTECTION OF FREE STANDING POLE WHEN USED. INSTALL ADDITIONAL ESO SWITCH ONLY WHEN BUILDING ESO IS NOT WITHIN 100 FEET ANY ANY OF THE DISPENSING DEVICES PER FIRE CODE REQUIREMENTS.

1 Overfill Alarm, Acknowledgment Switch and ESO

SCALE: 1/2" = 1'-0"

N.E.C. HAZARDOUS AREA NOTES

A — TYPICAL N.E.C. ARTICLE 514 CLASS 1 LOCATION (UNDERGROUND TANK - FILL OPENING)
EXTENT OF CLASS 1, GROUP D, DIVISION 1 LOCATION:
ANY PIT, BOX, OR SPACE BELOW GRADE LEVEL, ANY PART OF WHICH IS WITHIN THE DIVISION 1 OR 2 CLASSIFIED LOCATION.
EXTENT OF CLASS 1, GROUP D, DIVISION 2 LOCATION:
UP TO 18 INCHES ABOVE GRADE LEVEL WITHIN A HORIZONTAL RADIUS OF 10 FEET FROM A LOOSE FILL CONNECTION AND WITHIN A HORIZONTAL RADIUS OF 5 FEET FROM A TIGHT FILL CONNECTION.

B — TYPICAL N.E.C. ARTICLE 514 CLASS 1 LOCATION (UNDERGROUND TANK - VENT-DISCHARGING UPWARD)
EXTENT OF CLASS 1, GROUP D, DIVISION 1 LOCATION:
WITHIN 5 FEET OF OPEN END OF VENT, EXTENDING IN ALL DIRECTIONS.
EXTENT OF CLASS 1, GROUP D, DIVISION 2 LOCATION:
SPACE BETWEEN 5 FEET AND 10 FEET OF OPEN END OF VENT, EXTENDING IN ALL DIRECTIONS.

C — TYPICAL N.E.C. ARTICLE 514 CLASS 1 LOCATION (REMOTE PUMP - OUTDOOR)
EXTENT OF CLASS 1, GROUP D, DIVISION 1 LOCATION:
ANY PIT, BOX, OR SPACE BELOW GRADE LEVEL IF ANY PART IS WITHIN A HORIZONTAL DISTANCE OF 10 FT. FROM ANY EDGE OF PUMP.
EXTENT OF CLASS 1, GROUP D, DIVISION 2 LOCATION:
WITHIN 3 FEET OF ANY EDGE OF PUMP, EXTENDING IN ALL DIRECTIONS. ALSO UP TO 18 INCHES ABOVE GRADE LEVEL WITHIN 10 FEET HORIZONTALLY FROM ANY EDGE OF PUMP.

D — TYPICAL N.E.C. ARTICLE 514 CLASS 1 LOCATION (DISPENSING DEVICE - PITS)
EXTENT OF CLASS 1, GROUP D, DIVISION 1 LOCATION:
ANY PIT, BOX, OR SPACE BELOW GRADE LEVEL, ANY PART OF WHICH IS WITHIN THE DIVISION 1 OR 2 CLASSIFIED LOCATION.

E — TYPICAL N.E.C. ARTICLE 514 CLASS 1 LOCATION (DISPENSING DEVICE - DISPENSER)
EXTENT OF CLASS 1, GROUP D, DIVISION 1 LOCATION:
SPACE CLASSIFICATION INSIDE THE DISPENSER ENCLOSURE IS COVERED IN ANSI/UL 87, "POWER OPERATED DISPENSING DEVICES FOR PETROLEUM PRODUCTS."

F — TYPICAL N.E.C. ARTICLE 514 CLASS 1 LOCATION (DISPENSING DEVICE - DISPENSER)
EXTENT OF CLASS 1, GROUP D, DIVISION 2 LOCATION:
WITHIN 18 INCHES HORIZONTALLY IN ALL DIRECTIONS EXTENDING TO GRADE FROM (1) THE DISPENSER ENCLOSURE OR (2) THAT PORTION OF THE DISPENSER ENCLOSURE CONTAINING LIQUID HANDLING COMPONENTS.

G — TYPICAL N.E.C. ARTICLE 514 CLASS 1 LOCATION (DISPENSING DEVICE - OUTDOOR)
EXTENT OF CLASS 1, GROUP D, DIVISION 2 LOCATION:
UP TO 18 INCHES ABOVE GRADE LEVEL WITHIN 20 FEET HORIZONTALLY OF ANY EDGE OF ENCLOSURE.

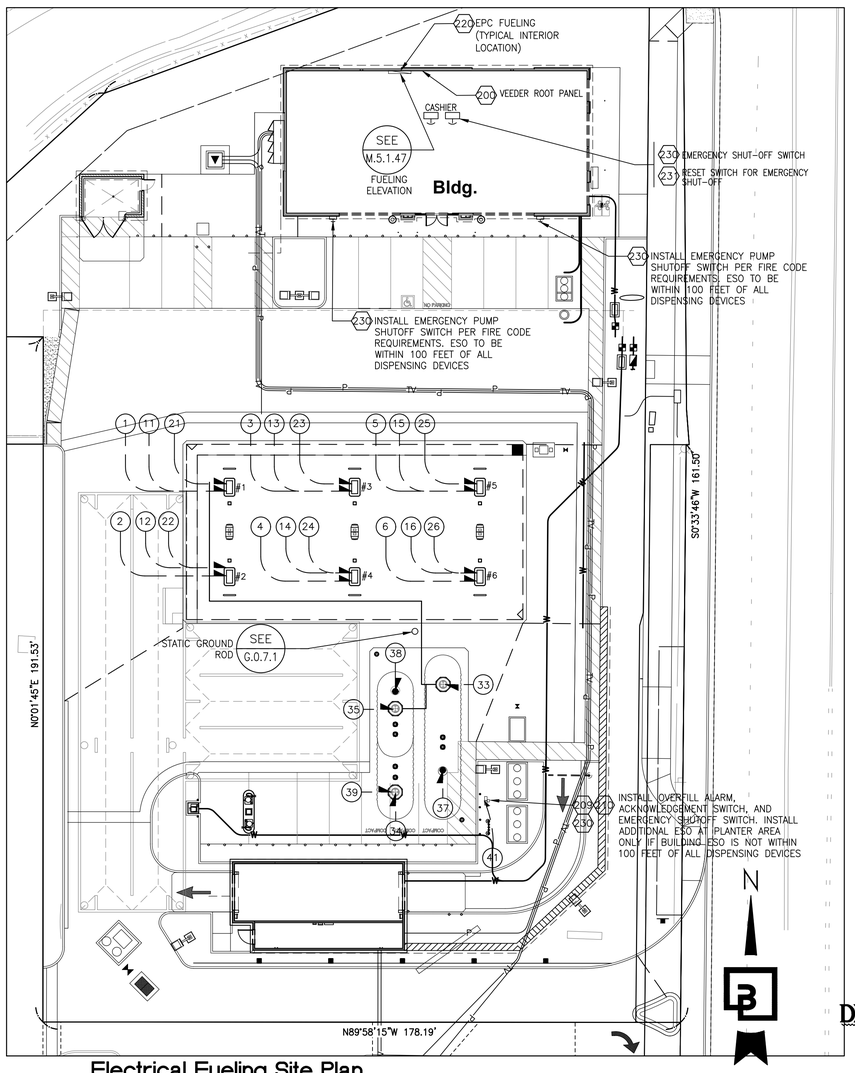

Electrical Fueling Site Plan

SCALE: 1" = 20'-0"

0 10' 20' 40'
SCALE: 1"=20'

DIGALERT Call Toll Free 811 TWO WORKING DAYS BEFORE YOU DIG

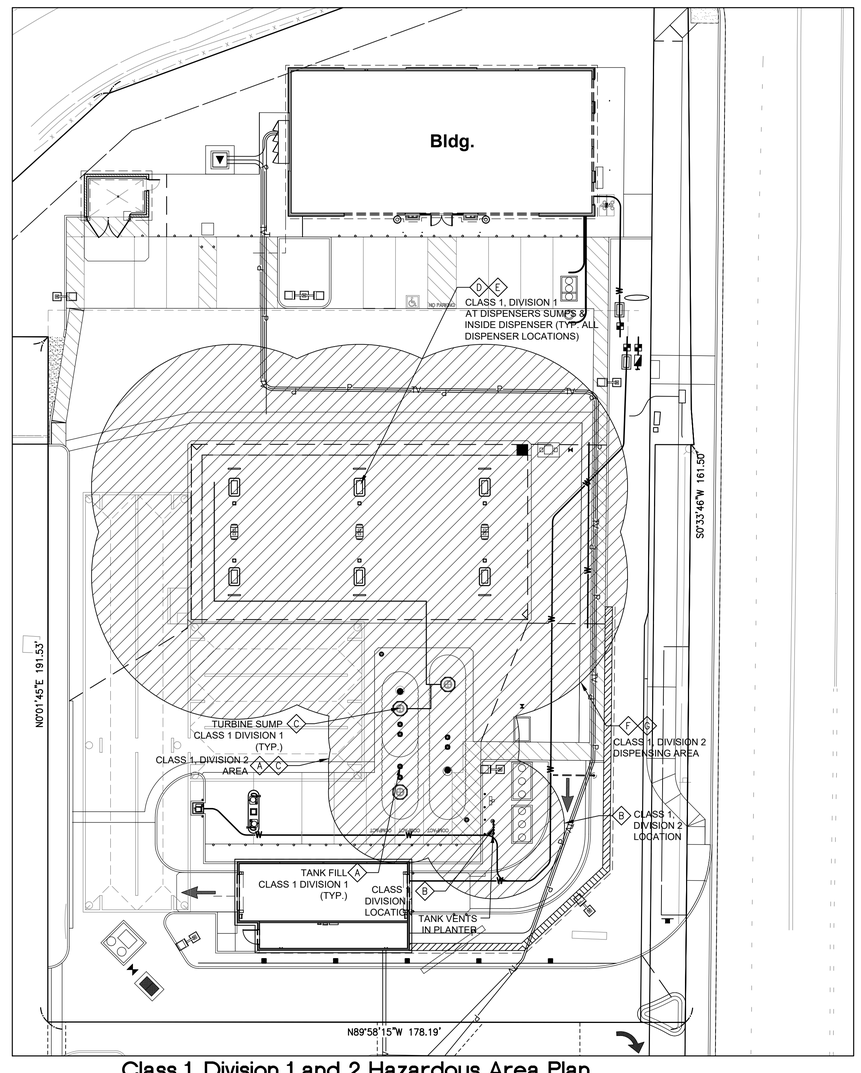

Class 1, Division 1 and 2 Hazardous Area Plan

SCALE: 1" = 10'-0"

0 10' 20' 40'
SCALE: 1"=20'

CLIENT: bp ARCO BP WEST COAST PRODUCTS, LLC

Barghausen Consulting Engineers, Inc.
18215 72nd Avenue South
Kent, WA 98032
425.251.6222
barghausen.com

NO.	DATE	REVISION DESCRIPTION
1	10/04/23	PERMIT RELEASE
2		
3		
4		
5		
6		
7		
8		
9		
10		
11		
12		

SEAL: HAL P. GRUEB, STATE OF WASHINGTON, 23975, REGISTERED PROFESSIONAL ENGINEER — 10/4/2023

DEVELOPMENT INFORMATION:
ARCO NTI
3400 am/pm FUEL CANOPY w/ 6 MPD's

SITE ADDRESS:
SWC S MERIDIAN
@ HIGHWAY 512
PUYALLUP, WASHINGTON

FACILITY #TBD

DESIGNED BY:	NP/RF	ALLIANCE Z&DM:	
CHECKED BY:	OV	BP REPM:	
DRAWN BY:	NP/RF	ALLIANCE PM:	
VERSION:	V-15.0 01/01/2023	PROJECT NO:	21730

DRAWING TITLE:
FUEL SYSTEM ELECTRICAL SITE PLAN

SHEET NO:
M.5.1.42

P:\21000s\21730\mechanical\tanks\21730 M.5.1.42.dwg 10/4/2023 11:47 AM NPHAN

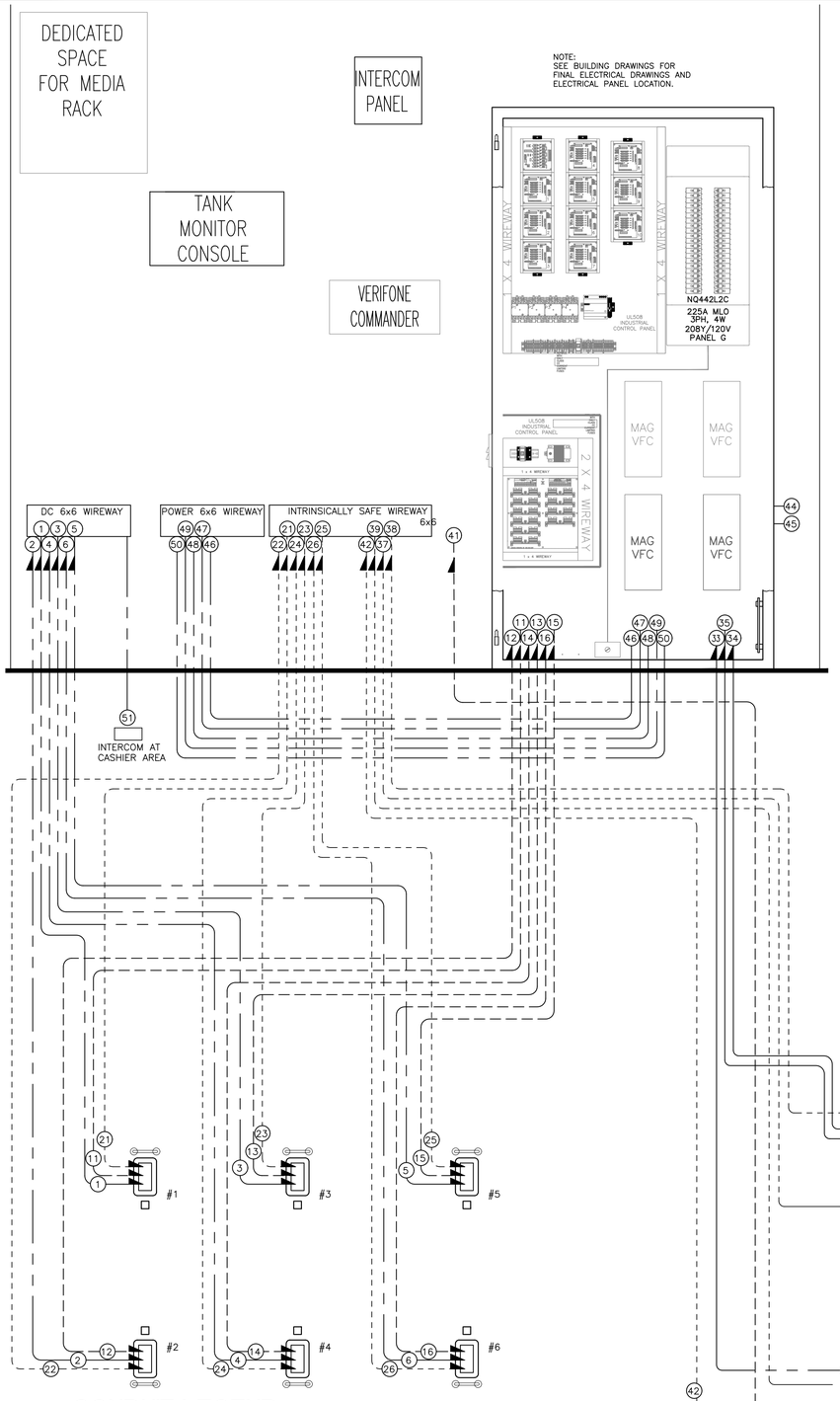

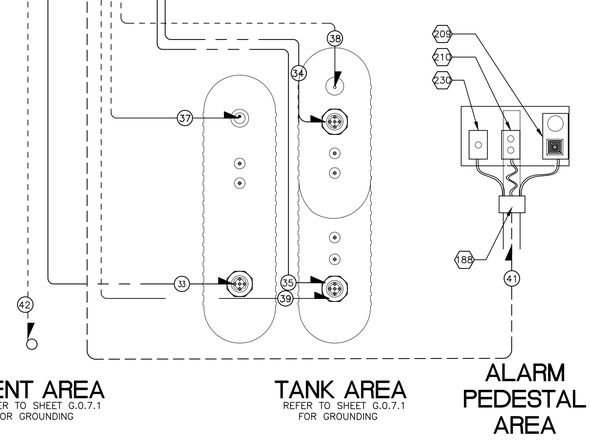

GENERAL NOTES:

A: SEE MATERIALS SCHEDULE FOR DESCRIPTION OF EQUIPMENT USED IN THIS CONSTRUCTION.
B: ROUTINGS SHOWN ARE SCHEMATIC, FINAL LOCATIONS SHALL BE SHOWN ON AS-BUILT DRAWINGS.
C: ALL EQUIPMENT SHALL BE INSTALLED AND WIRED AS PER MANUFACTURER'S SPECIFICATIONS.
D: FUNCTIONS OF THE CONTINUOUS MONITORING:
- MONITORING OF ALL ANNULAR SPACES.
- MONITORING OF ALL PRODUCT PIPING SUMPS.
- PROVIDE CONTINUOUS TANK LEVEL MONITORING.
- DISPENSER SUMP MONITORING.

E: ALL WIRES ENTERING CONTROL PANELS, MAIN PANELS, AND SUB PANELS SHALL BE MARKED WITH PHASE TAPE CODING AS FOLLOWS:
"A" PHASE = BLACK
"B" PHASE = RED
"C" PHASE = BLUE
F: THE CONTINUOUS MONITORING DEVICE SHALL PROVIDE POSITIVE SHUTDOWN OF TURBINES AND DISPENSERS IN THE EVENT OF A LIQUID RELEASE AND MANUALLY THROUGH THE ESO SWITCH LOCATED AT THE CASHIER AREA AND REMOTE ESO SWITCH AS INDICATED ON SITE PLAN.
G: ALL CONDUCTORS SHALL BE STRANDED COPPER WITH 75°C THWN OR THHN INSULATION.
H: AN EXPLOSION PROOF SEAL OFF (EPS) MUST BE INSTALLED UPON ENTERING AND LEAVING AN EXPLOSION PROOF JUNCTION BOX.
I: ALL CONDUITS SHALL HAVE INSULATED GROUNDING BUSHINGS INSTALLED AND TIED TOGETHER W/#4 BARE COPPER WIRE.
J: ALL WIRING TO PROBES AND SENSORS MUST BE GAS AND OIL RESISTANT SIZES FROM AWG #18 TO AWG #14. BARRIER GROUND WIRING MUST BE AWG #12 OR LARGER.
K: CONNECT WITH #12 AWG (OR LARGER) CONDUCTOR THE BARRIER GROUND TO THE EARTH GROUND BUS AT THE POWER DISTRIBUTION PANEL.
L: FIELD WRAP STEEL CONDUIT WITH A 100 MIL. COATING OF COAL TAR EPOXY (ROSS COAT OR 3M SCOTCH WRAP #50 TAPE IN CORROSIVE SOIL ENVIRONMENTS ONLY. SEE OWNERS REPRESENTATIVE FOR SITE REQUIREMENTS.
M: EQUIPMENT MUST BE INSTALLED AND USED IN ACCORDANCE WITH STATE, LOCAL N.F.P.A. NO. 30A AND 70 CODES AND REGULATIONS, AND APPLICABLE N.E.C. CODES. WIRE ALL CIRCUITS N.E.C. CLASS 1. SEE INTERCOM MANUFACTURER'S INSTALLATION INSTRUCTIONS FOR INTERCOM WIRING.
N: ALL EQUIPMENT EXCEPT DISPENSERS SHOULD BE INSTALLED IN A BUILDING WHERE TEMPERATURE WILL NOT BE LESS THAN 32°F OR HIGHER THAN 110°F.
O: WIREWAYS, CONDUITS AND WIRE FURNISHED BY INSTALLER. MAX. 7.5 FT. LONG 115V POWER CORD FOR APPROVED GROUNDED RECEPTACLE.
P: DISPENSER WIRING LENGTH NOT TO EXCEED 500 FT.
Q: ALL STATION WIRING MUST BE ON SAME PHASE OR ERRATIC OPERATION MAY RESULT. DO NOT USE SAME CIRCUITS USED FOR LIGHTING, COOLERS, PUMP MOTORS, ETC. ALL REQUIRE THREE (3) WIRE EARTH GROUND RECEPTACLES. GROUND IS NOT TO BE SHARED WITH AC COMMON.
R: MOTOR LEADS AND POWER DISTRIBUTION LEADS TO BE RUN IN SEPARATE CONDUIT FROM OTHER LEADS.
S: ALL PERIPHERAL EQUIPMENT MUST BE UL LISTED AND HAVE RS232 COMMUNICATION PROTOCOL, IF EQUIPMENT IS LISTED PER UL 478, THEN EQUIPMENT CANNOT BE INSTALLED OVER A CLASS 1, GROUP D, DIV. 2 HAZARDOUS LOCATION.
T: DISPENSER PAYMENT TERMINAL WIRING BETWEEN SITE CONTROLLER AND THE DISPENSERS CANNOT EXCEED 1000 WIRE FEET PER COMMUNICATION CHANNEL.
U: GENERAL CONTRACTOR SHALL ENSURE NO MIXING OF HIGH VOLTAGE AC CIRCUITS WITH LOW VOLTAGE DC CIRCUITS. PROVIDE MINIMUM 3'-0" BETWEEN FE PUMP CONTROLLERS & DC DISPENSER CONTROL BOXES.
V: UNISTRUT, IF USED, MUST NOT INTERFERE WITH THE FINISHED CHASE FILL.
W: SILICONE SEALING COMPOUND SHALL BE USED. ALL EXCESS SEALANT AND CONCRETE BACKFILL SHALL BE CLEANED FROM THE CONDUIT AND APPURTENANCES.
X: ANY CONDUITS PASSING BENEATH THE HAZARDOUS ZONE MUST HAVE A SEAL-OFF AT FIRST EMERGENCE FROM UNDERGROUND. SEE NEC SECTION 514-8, FIGURE 514-4.

(XX) NOTE: INDICATES ITEMS FOUND ON MATERIALS LIST SHEET M.5.1.01 & M.5.1.02

CONDUIT SCHEDULE

CONDUIT NUMBER	CONDUIT SIZE & TYPE	CONDUIT FILL	CONDUIT START	CONDUIT END	CONDUIT DESCRIPTION
1	1" RGS	(2) BELDEN CABLE 88760* + CAT 5 BELDEN CABLE #7928A FOR MEDIA	DISPENSER #1	INTERCOM PANEL AT MANAGER'S OFFICE	INTERCOM (SPEAKER & CALL BUTTON) ON DISPENSER
2	1" RGS	(2) BELDEN CABLE 88760* + CAT 5 BELDEN CABLE #7928A FOR MEDIA	DISPENSER #2	INTERCOM PANEL AT MANAGER'S OFFICE	INTERCOM (SPEAKER & CALL BUTTON) ON DISPENSER
3	1" RGS	(2) BELDEN CABLE 88760* + CAT 5 BELDEN CABLE #7928A FOR MEDIA	DISPENSER #3	INTERCOM PANEL AT MANAGER'S OFFICE	INTERCOM (SPEAKER & CALL BUTTON) ON DISPENSER
4	1" RGS	(2) BELDEN CABLE 88760* + CAT 5 BELDEN CABLE #7928A FOR MEDIA	DISPENSER #4	INTERCOM PANEL AT MANAGER'S OFFICE	INTERCOM (SPEAKER & CALL BUTTON) ON DISPENSER
5	1" RGS	(2) BELDEN CABLE 88760* + CAT 5 BELDEN CABLE #7928A FOR MEDIA	DISPENSER #5	INTERCOM PANEL AT MANAGER'S OFFICE	INTERCOM (SPEAKER & CALL BUTTON) ON DISPENSER
6	1" RGS	(2) BELDEN CABLE 88760* + CAT 5 BELDEN CABLE #7928A FOR MEDIA	DISPENSER #6	INTERCOM PANEL AT MANAGER'S OFFICE	INTERCOM (SPEAKER & CALL BUTTON) ON DISPENSER
7	NOT USED				
8	NOT USED				
9	NOT USED				
10	NOT USED				
11	1" RGS	5 #12 THWN & 1 #12 GRD. (POWER) (2) BELDEN CABLE #88760* - (DATA & CRIND)	DISPENSER #1	EPC PANEL AT ELECTRICAL CLOSET	POWER & DATA FOR DISPENSER
12	1" RGS	5 #12 THWN & 1 #12 GRD. (POWER) (2) BELDEN CABLE #88760* - (DATA & CRIND)	DISPENSER #2	EPC PANEL AT ELECTRICAL CLOSET	POWER & DATA FOR DISPENSER
13	1" RGS	5 #12 THWN & 1 #12 GRD. (POWER) (2) BELDEN CABLE #88760* - (DATA & CRIND)	DISPENSER #3	EPC PANEL AT ELECTRICAL CLOSET	POWER & DATA FOR DISPENSER
14	1" RGS	5 #12 THWN & 1 #12 GRD. (POWER) (2) BELDEN CABLE #88760* - (DATA & CRIND)	DISPENSER #4	EPC PANEL AT ELECTRICAL CLOSET	POWER & DATA FOR DISPENSER
15	1" RGS	5 #12 THWN & 1 #12 GRD. (POWER) (2) BELDEN CABLE #88760* - (DATA & CRIND)	DISPENSER #5	EPC PANEL AT ELECTRICAL CLOSET	POWER & DATA FOR DISPENSER
16	1" RGS	5 #12 THWN & 1 #12 GRD. (POWER) (2) BELDEN CABLE #88760* - (DATA & CRIND)	DISPENSER #6	EPC PANEL AT ELECTRICAL CLOSET	POWER & DATA FOR DISPENSER
17	NOT USED				
18	NOT USED				
19	NOT USED				
20	NOT USED				
21	1" RGS	(1) BELDEN CABLE 88760*	DISPENSER #1	INTRINSICALLY SAFE WIREWAY AT MANAGER'S OFFICE	DISPENSER SUMP MONITORING
22	1" RGS	(1) BELDEN CABLE 88760*	DISPENSER #2	INTRINSICALLY SAFE WIREWAY AT MANAGER'S OFFICE	DISPENSER SUMP MONITORING
23	1" RGS	(1) BELDEN CABLE 88760*	DISPENSER #3	INTRINSICALLY SAFE WIREWAY AT MANAGER'S OFFICE	DISPENSER SUMP MONITORING
24	1" RGS	(1) BELDEN CABLE 88760*	DISPENSER #4	INTRINSICALLY SAFE WIREWAY AT MANAGER'S OFFICE	DISPENSER SUMP MONITORING
25	1" RGS	(1) BELDEN CABLE 88760*	DISPENSER #5	INTRINSICALLY SAFE WIREWAY AT MANAGER'S OFFICE	DISPENSER SUMP MONITORING
26	1" RGS	(1) BELDEN CABLE 88760*	DISPENSER #6	INTRINSICALLY SAFE WIREWAY AT MANAGER'S OFFICE	DISPENSER SUMP MONITORING
27	NOT USED				
28	NOT USED				
29	NOT USED				
30	NOT USED				
31	NOT USED				
32	NOT USED				
33	1" RGS	3 #10 THWN & 1 #10 GRD.	TANK AREA - TURBINE	EPC PANEL AT ELECTRICAL CLOSET	TURBINE POWER
34	1" RGS	3 #10 THWN & 1 #10 GRD.	TANK AREA - TURBINE	EPC PANEL AT ELECTRICAL CLOSET	TURBINE POWER
35	1" RGS	3 #10 THWN & 1 #10 GRD.	TANK AREA - TURBINE	EPC PANEL AT ELECTRICAL CLOSET	TURBINE POWER
36	NOT USED				
37	1" RGS	(4) BELDEN CABLE 88760*	TANK AREA - ANNULAR	INTRINSICALLY SAFE WIREWAY AT MANAGER'S OFFICE	TANK MONITORING (TYP.) (VARIES BASED ON PLLD REQUIREMENTS)
38	1" RGS	(4) BELDEN CABLE 88760*	TANK AREA - ANNULAR	INTRINSICALLY SAFE WIREWAY AT MANAGER'S OFFICE	TANK MONITORING (TYP.) (VARIES BASED ON PLLD REQUIREMENTS)
39	1" RGS	(3) BELDEN CABLE 88760*	TANK AREA - TURBINE	INTRINSICALLY SAFE WIREWAY AT MANAGER'S OFFICE	TANK MONITORING (TYP.) (VARIES BASED ON PLLD REQUIREMENTS)
40	NOT USED				
41	1" RGS	6 #12 THWN & 1 #12 GRD.	TANK AREA OVERFILL ALARM	EPC PANEL AT ELECTRICAL CLOSET	POWER FOR OVERFILL ALARM AND ESO
42	NOT USED				
43	NOT USED				
44	1" RGS	4 #12 THWN & 1#12 GRD	EPC PANEL AT ELECTRICAL CLOSET	CASHIER AREA	EMERGENCY SHUT OFF SWITCH AND RESET SWITCH
45	1" RGS	2 #12 THWN & 1#12 GRD	EPC PANEL AT ELECTRICAL CLOSET	EXTERIOR BUILDING WALL	EMERGENCY SHUT OFF SWITCH
46	1" RGS	(6) BELDEN CABLE #88760* - (DATA)	EPC PANEL AT ELECTRICAL CLOSET	WAYNE DATA DISTRIBUTION AT MANAGER'S OFFICE	DATA & CRIND WIRES FOR DISPENSER COMM.
47	1" RGS	(6) BELDEN CABLE #88760* - (DATA)	EPC PANEL AT ELECTRICAL CLOSET	WAYNE DATA DISTRIBUTION AT MANAGER'S OFFICE	DATA & CRIND WIRES FOR DISPENSER COMM.
48	1" RGS	(4) BELDEN CABLE #88760* - (DATA)	EPC PANEL AT ELECTRICAL CLOSET	WAYNE DATA DISTRIBUTION AT MANAGER'S OFFICE	DATA & CRIND WIRES FOR DISPENSER COMM.
49	2" RGS	28 #12 THWN & 2 #12 GRD	EPC PANEL AT ELECTRICAL CLOSET	VEEDER ROOT PANEL AT MANAGER'S OFFICE	CONTROL FOR OVERFILL ALARM; PLLD WIRES AND CONTROL FROM DM-EX MODULES
50	1" RGS	SPARE W/ PULL ROPE	EPC PANEL AT ELECTRICAL CLOSET	MANAGER'S OFFICE	FUTURE
51	2" RGS	(32) #18 TW TWISTED PAIR SHIELDED INDIVIDUALLY	MANAGER'S OFFICE	INTERCOM AT CASHIER AREA	INTERCOM (SPEAKER & CALL BUTTON)

* SUBSTITUTE ALTERNATE SPEC FOR WASHINGTON STATE AND WHERE REQUIRED BY LOCAL AUTHORITY HAVING JURISDICTION . BELDEN CABLE # 1032A

CLIENT:

bp

ARCO

BP WEST COAST PRODUCTS, LLC

Barghausen Consulting Engineers, Inc.

18215 72nd Avenue South
Kent, WA 98032
425.251.6222
barghausen.com

NO.	DATE	REVISION DESCRIPTION
1	10/04/23	PERMIT RELEASE
2		
3		
4		
5		
6		
7		
8		
9		
10		
11		
12		

SEAL:

HAL P. GRUBB — STATE OF WASHINGTON — 23975 — REGISTERED PROFESSIONAL ENGINEER

10/4/2023

DEVELOPMENT INFORMATION:

ARCO NTI

3400 am/pm FUEL CANOPY w/ 6 MPD's

SITE ADDRESS:

SWC S MERIDIAN

@ HIGHWAY 512
PUYALLUP, WASHINGTON

FACILITY #TBD

DESIGNED BY:	NP/RF	ALLIANCE Z&DM:	
CHECKED BY:	OV	BP REPM:	
DRAWN BY:	NP/RF	ALLIANCE PM:	
VERSION:	V-15.0 01/01/2023	PROJECT NO:	21730

DRAWING TITLE:

FUEL SYSTEM ELECTRICAL CONDUIT POINT TO POINT PLAN (SPLIT TANK VERSION)

SHEET NO:

M.5.1.43

P:\21000s\21730\mechanical\tanks\21730 M.5.1.43.dwg 10/4/2023 11:53 AM NPHAN

WAYNE VISTA NON-"e" OR OVATION WITH NUCLEUS WITH OR WITHOUT DIESEL (1)

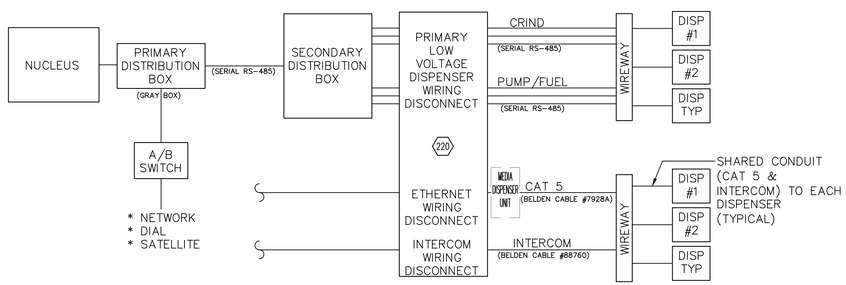

WAYNE VISTA NON-"e" OR OVATION WITH RADIANT WITH OR WITHOUT DIESEL (2)

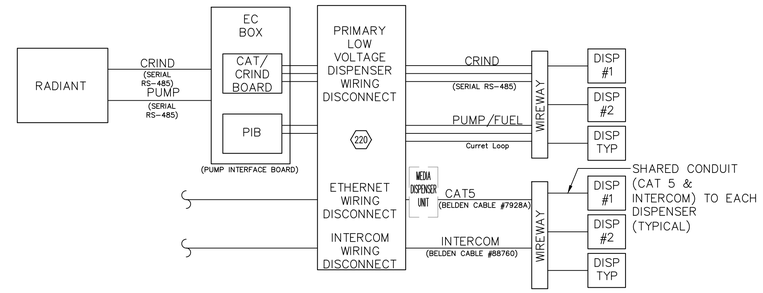

ARCO WAYNE NON-"e" TO RETALIX POS (3)

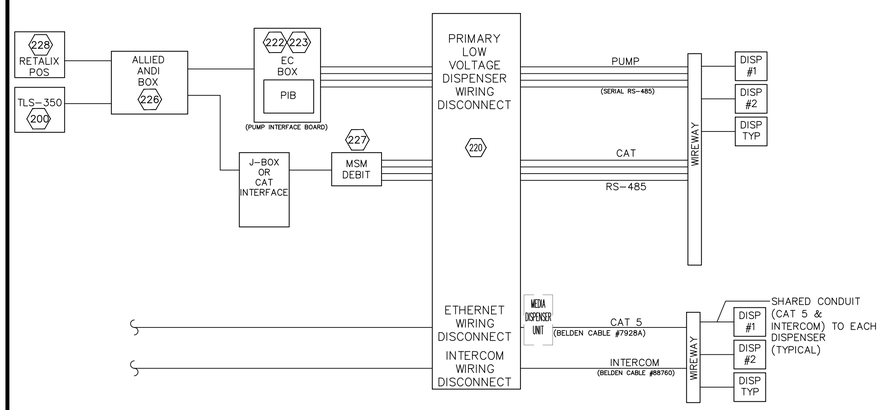

NOTE:
"MSI" POS CAN
BE WIRED SIMILARLY

WAYNE VISTA NON-"e" OR OVATION WITH FUSION WITH OR WITHOUT DIESEL (4)

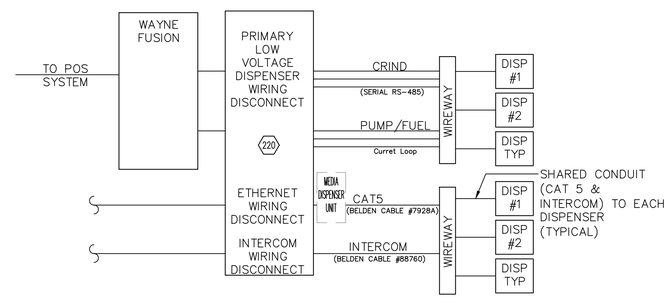

WAYNE VISTA NON-"e" OR OVATION WITH OR WITHOUT DIESEL (VERIFONE COMMANDER) (5)

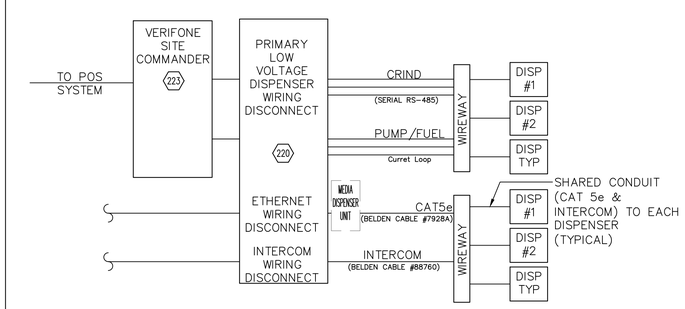

LEAK DETECTION SYSTEM NOTES (6)

Leak Detection System Notes

1. WARNING:
   MONITOR SENSOR & PROBE WIRING IS INTRINSICALLY SAFE WIRING AND MUST BE SEPARATE FROM ALL OTHER WIRING AND INSTALLED IN SEPARATE CONDUIT. MAXIMUM CABLE LENGTH BETWEEN MONITOR CONSOLE AND SENSORS IS 1,000 FEET.
2. CAUTION:
   120 VAC WIRING MUST NOT BE CONNECTED TO LOW VOLTAGE CONNECTIONS. DAMAGE FROM MISWIRING IS NOT COVERED BY WARRANTY. INSTALLING CONTRACTOR TO BE HELD RESPONSIBLE.
3. INSTALL TANK MONITOR SYSTEM PER MANUFACTURER'S INSTALLATION INSTRUCTIONS.
4. USE BELDEN CABLE # 88760 OR APPROVED EQUAL FOR ALL SENSOR AND PROBE WIRING.
5. RUN RIGID METAL CONDUIT FOR PROBE AND SENSOR WIRING FROM THE MONITOR CONSOLE TO THE INTRINSICALLY SAFE WIREWAY. CONDUIT MUST ENTER THE MONITOR WHERE KNOCKOUTS ARE PROVIDED. NO OTHER CONDUIT ENTRY IS PERMITTED.
6. SPECIAL NOTE: IT IS THE INTENT OF THIS DESIGN THAT ANY DETECTED LEAK OR ANY FAILURE OF THE LEAK DETECTION SYSTEM, WILL RESULT IN THE INTERRUPTION OF ALL POWER TO THE PRODUCT PUMPS.
7. CERTIFIED INSTALLERS– ALL MANUFACTURERS TRAINING REQUIREMENTS SHALL BE MET BY CONTRACTOR INSTALLING SENSORS/PROBES AND WIRING TO MONITORING SYSTEM.
8. IT IS THE RESPONSIBILITY OF THE INSTALLING CONTRACTOR TO NOTIFY THE VEEDER ROOT DISTRIBUTOR FOR STARTUP.
9. SEE MANUFACTURERS WIRING DIAGRAM FOR SPECIFIC WIRING AND FURTHER INFORMATION.
10. EACH TURBINE RELAY IS TO BE WIRED INTO THE MONITOR CONTROL SO THAT AN ACTIVATION OF TURBINE SIDE SUMP SENSOR OR ANNULAR SPACE SENSOR OR LLD WILL SHUT DOWN THE TURBINE FOR THAT TANK.

CAT 5 CABLE INSTALLATION GUIDE (7)

CAT 5 Cable Installation Guide

1. EXCESSIVE FORCE SHOULD NOT BE USED TO PULL IN NEW CABLE. PULL FORCE SHOULD NOT EXCEED 25 LBS.
2. CABLE SHALL NOT BE KINKED, KNOTTED, OR OTHERWISE DEFORMED DURING INSTALLATION.
3. PROPER CABLE SUPPORT HARDWARE SUCH AS J-HOOKS SHALL BE USED TO PREVENT RIPPING OR FRAYING OF CABLE. WHERE USED, STAPLES SHALL BE NON-METALLIC PLASTIC. STAPLE SHOULD BE LOOSE ENOUGH SUCH THAT CABLE JACKET IS NOT CRIMPED.
4. CABLE BUNDLES MAY BE SECURED WITH LOOSE FITTING WIRE TIE OR VELCRO TIE WRAPS. CABLES SHALL NOT BE OVER TIGHTENED SUCH THAT CRUSH STRESS IS EVIDENT.
5. CABLE SHALL BE ROUTED TO PERMIT SWEEPING BENDS, NOT RIGHT ANGLES OR SHARP BENDS. CABLE RUNS SHALL BE INDIVIDUALLY SUPPORTED.
6. A MINIMUM OF CABLE JACKET SHALL BE REMOVED WHEN TERMINATING. CABLE JACKET SHALL EXTEND AS CLOSE AS PRACTICAL TO THE TERMINATION POINT, LEAVING NO MORE THAN 3/4 INCH OF WIRE EXPOSED.
7. MAINTAIN TWISTED CONFIGURATION OF WIRE PAIRS TO WITHIN 1/2 INCH OF THE TERMINATION POINT.
8. WIRES SHALL NOT BE SPLICED. DAMAGED CABLE SHALL BE REPLACED, NOT REPAIRED.
9. LEAVE APPROXIMATELY 18 INCHES OF SPARE WIRE AT OUTLET AND CONNECTION POINT.
10. ENSURE ADEQUATE SEPARATION WHEN RUNNING CAT 5 CABLE PARALLEL TO POWER WIRING. CABLE SHALL NOT BE ROUTED THROUGH SAME BORE HOLES AS POWER WIRING. WHERE POSSIBLE CAT 5 CABLES SHOULD CROSS POWER WIRES AT 90 DEGREE ANGLES. MAINTAIN SEPARATION BETWEEN CABLE AND OTHER WIRING AS FOLLOWS:

PURPOSE	TYPE OF WIRE	MIN. SEPARATION
POWER SUPPLY	OPEN WIRING LESS THAN 300 VOLTS	2 INCHES
	WIRE IN CONDUIT OR ARMORED OR NON-METALLIC SHEATH CABLE/POWER GROUND WIRES	NONE
RADIO & TELEVISION	ANTENNA LEAD & GROUND WIRES WITHOUT GROUNDED SHIELD	4 INCHES
SIGNAL & CONTROL WIRE	OPEN WIRING NOT OVER 300 VOLTS	NONE
CATV CABLES	COMMUNITY TELEVISION SYSTEMS COAXIAL CABLES WITH GROUNDED SHIELD	NONE
TELEPHONE SERVICE DROP WIRE	AERIAL OR BURIED	2 INCHES
SIGN	NEON SIGNS AND ASSOCIATED WIRING FROM TRANSFORMER	6 INCHES
FLUORESCENT LIGHTING	FLUORESCENT LIGHTING WIRE	5 INCHES
LIGHTNING SYSTEM	LIGHTNING RODS AND WIRES	6 FEET

XX NOTE: INDICATES ITEMS FOUND ON MATERIALS LIST SHEET M.5.1.01 & M.5.1.02

CLIENT:

bp

ARCO
BP WEST COAST PRODUCTS, LLC

Barghausen Consulting Engineers, Inc.
18215 72nd Avenue South
Kent, WA 98032
425.251.6222
barghausen.com

NO.	DATE	REVISION DESCRIPTION
1	10/04/23	PERMIT RELEASE
2		
3		
4		
5		
6		
7		
8		
9		
10		
11		
12		

SEAL:
HAL P. GRUEB
STATE OF WASHINGTON
23975
REGISTERED PROFESSIONAL ENGINEER
10/4/2023

DEVELOPMENT INFORMATION:
ARCO NTI
3400 am/pm
FUEL CANOPY w/ 6 MPD's

SITE ADDRESS:
SWC S MERIDIAN
@ HIGHWAY 512
PUYALLUP, WASHINGTON

FACILITY #TBD

DESIGNED BY:	NP/RF	ALLIANCE Z&DM:	
CHECKED BY:	OV	BP REPM:	
DRAWN BY:	NP/RF	ALLIANCE PM:	
VERSION:	V-15.0 01/01/2023	PROJECT NO:	21730

DRAWING TITLE:
WAYNE DISPENSER SCHEMATICS LEAK DETECTION AND CAT 5 NOTES

SHEET NO:
M.5.1.44

P:\21000s\21730\mechanical\dwgs\21730 M.5.1.44.dwg 10/3/2023 8:47 AM NPHAN

DESCRIPTION

THIS DRAWING DESCRIBES THE INTRINSICALLY SAFE EQUIPMENT AND ASSOCIATED APPARATUS THAT TOGETHER FORM AN INTRISICALLY SAFE SYSTEM.

TLS-450PLUS CONSOLES ARE IDENTIFIED BY FORM NUMBERS 8600. A TLS-450PLUS CONSOLE CANNOT BE CONNECTED IN PARALLEL WITH ANOTHER TLS-450PLUS OR ANY OTHER ASSOCIATED APPARATUS. TLS-450PLUS CONSOLE AND OPTIONAL EXPANSION BOXES MUST BE INSTALLED IN INDOOR NON-HAZARDOUS AREAS.

TLS-450PLUS CONSOLE

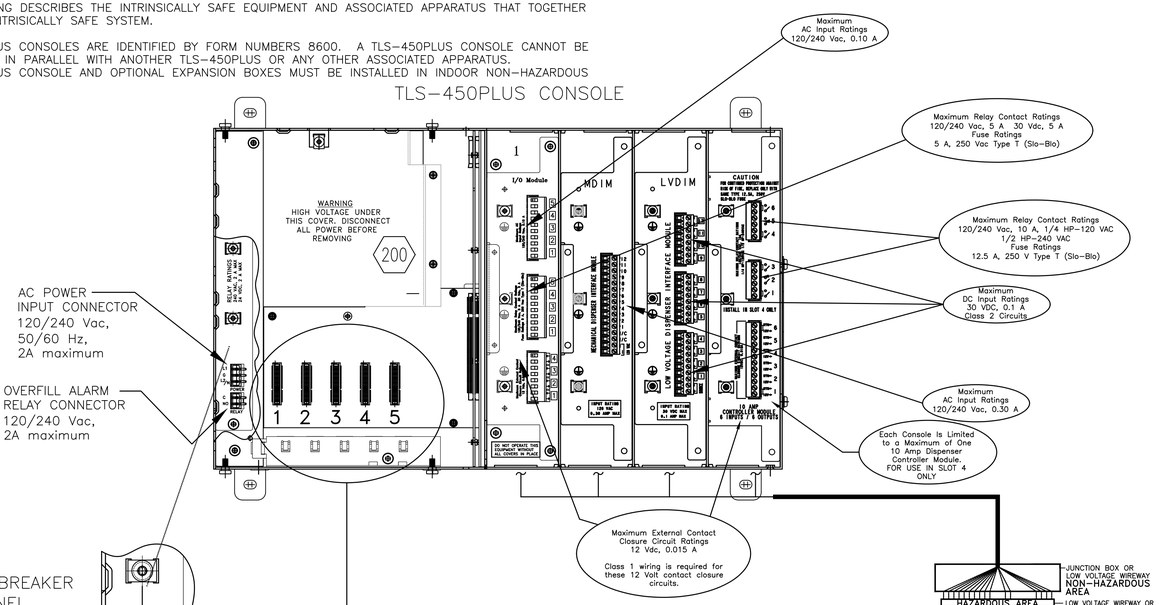

CIRCUIT BREAKER PANEL

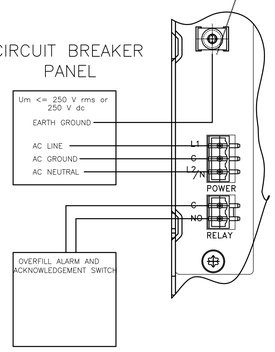

COMM MODULES	PERMISSABLE SLOT(S)
SITEFAX MODEM MODULE	1, 2 OR 3
USB/WIRELESS MODULE	5 ONLY
ETHERNET INTERFACE MODULE	4 ONLY
SINGLE SERIAL PORT MODULE	1, 2 OR 3
DUAL SERIAL PORT MODULE	1, 2 OR 3
ELECTRONIC DISPENSER INTERFACE MODULE (EDIM)	1, 2 OR 3
CURRENT LOOP DISPENSER INTERFACE MODULE (CDIM)	1, 2 OR 4
NOTE: Limited single port capability in slot 3.	

Veeder Root Console

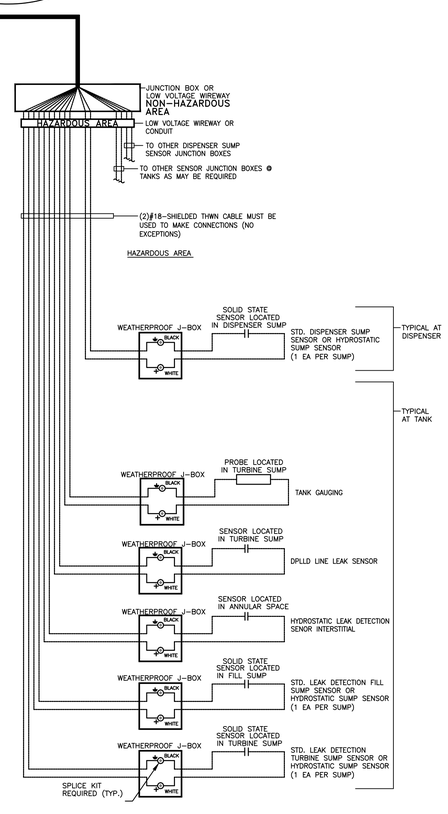

INTRINSICALLY-SAFE AREA

BAY 1

5	SPARE
4	SPARE
3	DIESEL #1 HOOK IN
2	PREMIUM HOOK IN
1	UNLEADED HOOK IN
5	SPARE
4	SPARE
3	DIESEL #1 HOOK OUT
2	PREMIUM HOOK OUT
1	UNLEADED HOOK OUT
4	NOT USED
3	NOT USED
2	NOT USED
1	NOT USED
MODULE TYPE: US I/O	

BAY 2

15	DISPENSER 5/6
14	DISPENSER 3/4
13	DISPENSER 1/2
12	ANNULAR - DIESEL
11	ANNULAR - ULP
10	ANNULAR - ULR
9	TURBINE SUMP - DIESEL
8	TURBINE SUMP - ULP
7	TURBINE SUMP - ULR
6	ATG - DIESEL
5	ATG - ULP
4	ATG - ULR
3	DPLLD - DIESEL
2	DPLLD - ULP
1	DPLLD - ULR
MODULE TYPE: USM	

BAY 3

15	
14	
13	
12	
11	
10	
9	
8	
7	
6	
5	
4	
3	DISPENSER 11/12
2	DISPENSER 9/10
1	DISPENSER 7/8
MODULE TYPE: USM	

BAY 4

15	
14	
13	
12	
11	
10	
9	
8	
7	
6	
5	
4	
3	
2	
1	
MODULE TYPE: USM	

Module Configuration

(XX) NOTE: INDICATES ITEMS FOUND ON MATERIALS LIST SHEET M.5.1.01 & M.5.1.02

IST-VFC NOTES

REQUIREMENTS FOR THIS SYSTEM:

1. VFC CONTROL BOXES WITH LATEST SOFTWARE. PLEASE CONTACT FE PETRO FOR AVAILABILITY.
2. VEEDER-ROOT TLS-450PLUS WITH LATEST VERSION OF TLS SOFTWARE. PLEASE CONTACT VEEDER-ROOT FOR AVAILABILITY.
3. SET ALL THE VFC'S WITH DPLLD TRANSDUCER INSTALLED IN ITS PUMP TO BE THE MASTER VFC.
4. 18 AWG 3-WIRE SHIELDED COMMUNICATION CABLE (300 V MINIMUM) CONNECTING VFCS.
5. INSTALLATION MANUALS FOR BOTH VEEDER-ROOT TLS-450PLUS & FE PETRO VFC WILL BE AVAILABLE DURING INSTALLATION.

BASIC OPERATION FOR THIS CONFIGURATION:

1. THE VEEDER-ROOT TLS-450PLUS SYSTEM MONITOR THE TANK PRODUCT LEVELS.
2. WHEN DEMAND FOR PRODUCT IS CALLED FOR, A 120 VAC HOOK SIGNAL FROM DISPENSER IS PRESENT, THE VEEDER-ROOT TLS-450PLUS SYSTEM WILL TURN ON A PUMP, DICTATED BY CONSOLE CONFIGURATION.
3. WHEN DEMAND FOR PRODUCT RISES, MORE PEOPLE DISPENSING PRODUCT, WHICHEVER VFC IS IN THE LEAD POSITION CAN CALL FOR ADDITIONAL VFC TO TURN ON.
4. WHEN THE DEMAND FOR PRODUCT GOES AWAY, THE VEEDER-ROOT SYSTEM WILL PERFORM A LINE LEAK TEST ACCORDING TO VEEDER-ROOT'S LINE TEST PROTOCOL.
5. IN THIS CONFIGURATION, IF THERE ARE ANY FAULTS IN THE SYSTEM THE WHOLE SYSTEM WILL BE SHUT DOWN.

THE WIRING DIAGRAM IN FIGURE 1 SHOWS THE CONNECTIONS BETWEEN THE VEEDER-ROOT POWER BAY CONSOLE AND THE MASTER VFCS.

1. FOLLOW ALL SAFETY AND INSTALLATION INSTRUCTIONS IN THE LATEST VEEDER-ROOT SITE PREP AND INSTALLATION INSTRUCTIONS FOR THE VEEDER-ROOT TLS-450PLUS.
2. FOLLOW ALL SAFETY AND INSTALLATION INSTRUCTIONS IN THE LATEST IST-VFC INSTALLATION AND OWNERS MANUAL FOR WIRING NOT SHOWN IN FIGURE 1.
3. SET SW3 SWITCHES ACCORDING TO MASTER CONFIGURATION.
4. CALIBRATE CONTROLLERS ACCORDING TO CALIBRATION INSTRUCTIONS IN IST-VFC INSTALLATION AND OWNERS MANUAL.

ADDITIONAL NOTES:

1. FOR ADDITIONAL INFORMATION, REFERENCE THE LATEST VEEDER-ROOT SITE PREPARATION AND INSTALLATION MANUAL FOR INSTALLATION INSTRUCTIONS OF DPLLD USING A MASTER CONFIGURATION.

2. THE VEEDER-ROOT TLS-450PLUS SYSTEM MUST BE PROGRAMMED USING THE CORRECT DISPENSER MODE. SEE THE LATEST VEEDER-ROOT SYSTEM SET-UP MANUAL FOR SPECIFIC PROGRAMMING INSTRUCTIONS.

3. THE VEEDER-ROOT TLS-450PLUS MUST BE PROGRAMMED USING THE CORRECT TANK SET-UP. THE PROGRAMMER MUST ASSIGN THE FIRST MASTER TANK T-1 TO LINE LEAK DETECTOR Q-1. THE SECOND MASTER TANK T-2 TO LINE LEAK DETECTOR Q-2. SPECIFIC PROGRAMMING QUESTIONS SHOULD BE DIRECTED TO VEEDER-ROOT TECHNICAL SUPPORT DEPARTMENT.

VEEDER-ROOT TLS-450PLUS NOTES

⚠ WARNING: IN INSTALLATION AND USE OF THIS PRODUCT, COMPLY WITH THE NATIONAL ELECTRICAL CODE: FEDERAL, STATE AND LOCAL CODES. IN ADDITION, TURN OFF POWER AND TAKE OTHER NECESSARY PRECAUTIONS DURING INSTALLATION, SERVICE AND REPAIR TO PREVENT PERSONAL INJURY, PROPERTY LOSS AND EQUIPMENT DAMAGE.

⚠ WARNING: DISCONNECT ALL POWER BEFORE MAKING AN CONNECTIONS TO PREVENT DEATH, SERIOUS INJURY, EXPLOSION OR ELECTRICAL SHOCK. MONITOR MUST NEVER BE OPERATED UNLESS THE FRONT COVER IS CLOSED OVER THE BARRIER TERMINALS IN THE INTRINSICALLY SAFE AREA.

NOTES:

1. WIRING TO PROBES, SENSORS, & DPLLD MUST BE SHIELDED MULTI-STRAND, GAS AND OIL RESISTANT SIZES FROM AWG #18 TO AWG #14. BARRIER GROUND WIRING MUST BE AWG #12 OR LARGER.

2. CONNECT WITH #12 AWG (OR LARGER) CONDUCTOR THE BARRIER GROUND TO THE EARTH GROUND BUS AT THE POWER DISTRIBUTION PANEL.

3. ⦿ DENOTES FIELD WIRING CONNECTION USING WATERPROOF CONNECTORS SUPPLIED WITH THE PROBE(S) AND SENSOR(S).

4. INTRINSICALLY SAFE WIRING SHALL BE INSTALLED IN ACCORDANCE WITH ARTICLE 504-20 OF THE NEC AND NFPA 70 (CURRENT VERSIONS).

5. TO MAINTAIN INTRINSIC SAFETY AND PROPER SYSTEM OPERATION, PROBE AND SENSOR WIRING MUST BE INSTALLED WITHIN SEALED CONDUIT.

6. ELECTRICAL RATING POWER INPUT – 120VAC, 50/60 HZ, 600 WATTS MAX.

7. REFER TO THE LATEST "SITE PREPARATION AND INSTALLATION INSTRUCTIONS," MANUAL FOR ACTUAL LOCATION OF CONDUIT ENTRY INTO TLS-450PLUS MONITOR.

8. REFER TO LINE LEAK DETECTOR IN THE LATEST "SITE PREPARATION AND INSTALLATION."

9. RS-232 MODULE IS LOCATED IN THE COMMUNICATIONS COMPARTMENT AND MUST BE ORDERED SEPARATELY.

10. BONDING LOCKNUTS AND OR BONDING BUSHINGS SHALL BE USED AT ALL CONDUIT ENTRANCES TO THE TLS-450PLUS ENCLOSURE AND AT ANY JUNCTION BOX/WIREWAYS IN THE NON-HAZARDOUS AREA TO ENSURE POSITIVE CONDUIT GROUNDING.

11. FOR 2 PUMPS IN SINGLE TANK OPERATION, AN ADDITIONAL I/O MODULE REQUIRED AND MUST BE ORDERED SEPARATELY.

12. NO SPLICING OF PROBE/SENSOR WIRE EXCEPT AT THE DEVICE ITSELF.

13. CONTRACTOR MUST COMPLY WITH ALL THE TRAINING REQUIREMENTS OF VEEDER-ROOT.

14. SPECIFIC PROGRAMMING FOR VEEDER ROOT TLS-450PLUS CONSOLE SHALL BE OBTAINED FROM THE LOCAL ENVIRONMENTAL COMPLIANCE MANAGER.

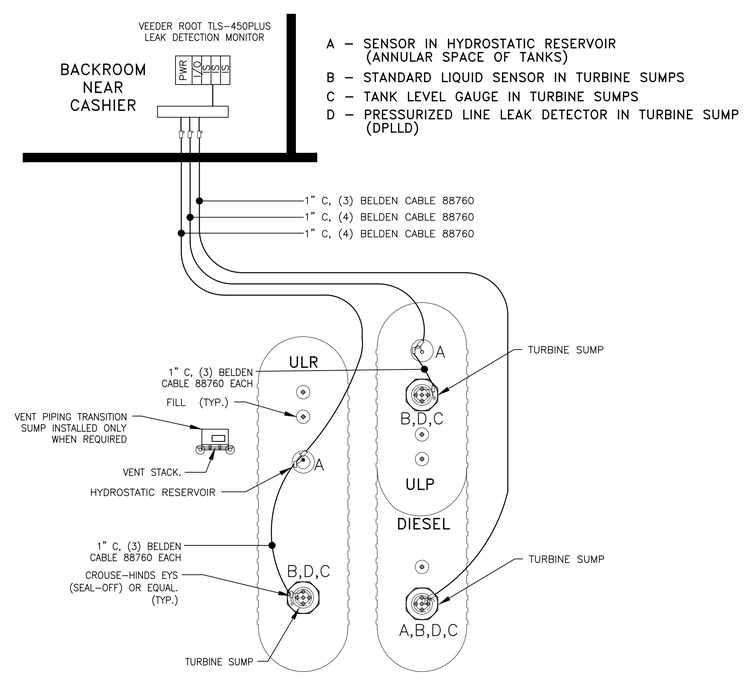

SEE TANK FUELING SITE PLAN FOR SPECIFIC TANK LAYOUT

Tank Monitoring Conduit Schematic

SCALE: N.T.S.

CLIENT: bp

ARCO
BP WEST COAST PRODUCTS, LLC

Barghausen Consulting Engineers, Inc.
18215 72nd Avenue South
Kent, WA 98032
425.251.6222
barghausen.com

NO.	DATE	REVISION DESCRIPTION
1	10/04/23	PERMIT RELEASE
2		
3		
4		
5		
6		
7		
8		
9		
10		
11		
12		

SEAL: HAL P. GRUBB, STATE OF WASHINGTON, 23975, REGISTERED PROFESSIONAL ENGINEER, 10/4/2023

DEVELOPMENT INFORMATION:
ARCO NTI
3400 am/pm
FUEL CANOPY w/ 6 MPD's

SITE ADDRESS:
SWC S MERIDIAN
@ HIGHWAY 512
PUYALLUP, WASHINGTON

FACILITY #TBD

DESIGNED BY:	NP/RF	ALLIANCE Z&DM:	
CHECKED BY:	OV	BP REPM:	
DRAWN BY:	NP/RF	ALLIANCE PM:	
VERSION:	V-15.0 01/01/2023	PROJECT NO:	21730

DRAWING TITLE:
VEEDER ROOT 450 AND FE PETRO INTERFACE FIELD WIRING DIAGRAM (SINGLE MASTER) (SPLIT TANK VERSION)

SHEET NO:
M.5.1.45

P:\21000s\21730\mechanical\tanks\21730 M.5.1.45.dwg 10/5/2023 8:46 AM NPHAN

INTERIOR VIEW

SECTION 3 (220)

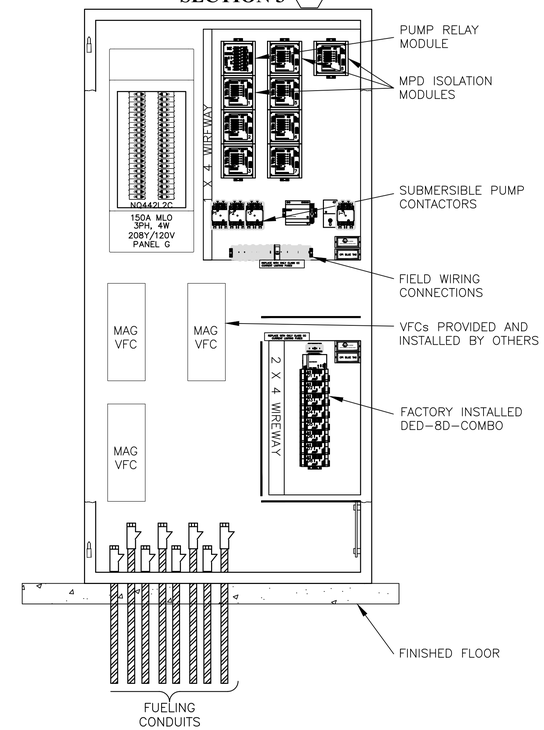

EXTERIOR VIEW

SECTION 3 (220)

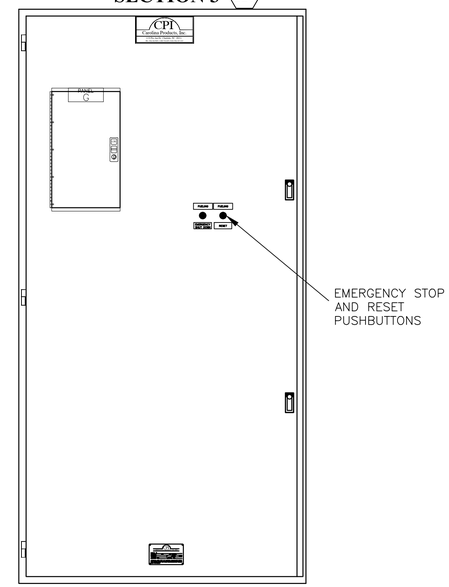

STUB UP DETAIL

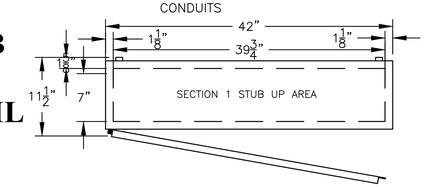

NOTE:
SEE BUILDING DRAWINGS FOR FINAL ELECTRICAL DRAWINGS AND ELECTRICAL PANEL LOCATION.

CONTACT:
BRYAN STRYKER
CAROLINA PRODUCTS INCORPORATED
(704) 441-4048
BRYANS@CPIPANELS.COM

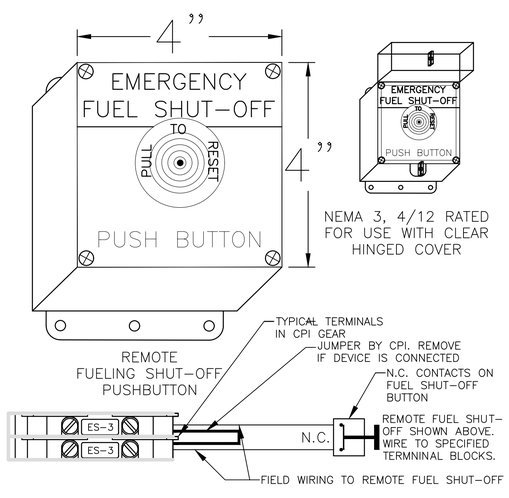

1.1 FUELING EMERGENCY STOP PUSHBUTTON

INSTALLATION DETAILS

CLEAR HINGED LOCKOUT COVER INSTALLED WITH EMERGENCY (FUEL) SHUTDOWN PUSH BUTTON

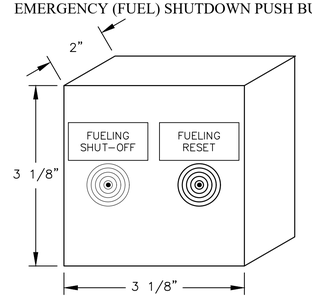

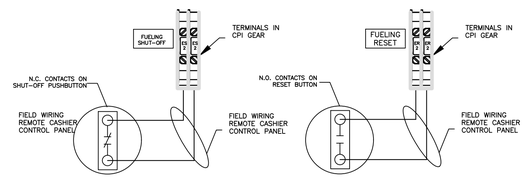

1.2 CASHIER CONTROL PANEL

INSTALLATION DETAILS

(XX) NOTE: INDICATES ITEMS FOUND ON MATERIALS LIST SHEET M.5.1.01 & M.5.1.02

CLIENT:

bp

ARCO

BP WEST COAST PRODUCTS, LLC

Barghausen Consulting Engineers, Inc.

18215 72nd Avenue South
Kent, WA 98032
425.251.6222
barghausen.com

NO.	DATE	REVISION DESCRIPTION
1	10/04/23	PERMIT RELEASE
2		
3		
4		
5		
6		
7		
8		
9		
10		
11		
12		

SEAL:

HAL P. GRUBB — STATE OF WASHINGTON — 23975 — REGISTERED PROFESSIONAL ENGINEER

10/4/2023

DEVELOPMENT INFORMATION:

ARCO NTI

3400 am/pm FUEL CANOPY w/ 6 MPD's

SITE ADDRESS:

SWC S MERIDIAN

@ HIGHWAY 512
PUYALLUP, WASHINGTON

FACILITY #TBD

DESIGNED BY:	NP/RF	ALLIANCE ZADM:	
CHECKED BY:	OV	BP REPM:	
DRAWN BY:	NP/RF	ALLIANCE PM:	
VERSION:	V-15.0 01/01/2023	PROJECT NO:	21730

DRAWING TITLE:

ELECTRICAL UNITIZED FUELING MANAGER CABINET ELEVATIONS AND DETAILS

SHEET NO:

M.5.1.47

P:\21000s\21730\mechanical\tanks\21730 M.5.1.47.dwg 10/3/2023 8:46 AM NPHAN

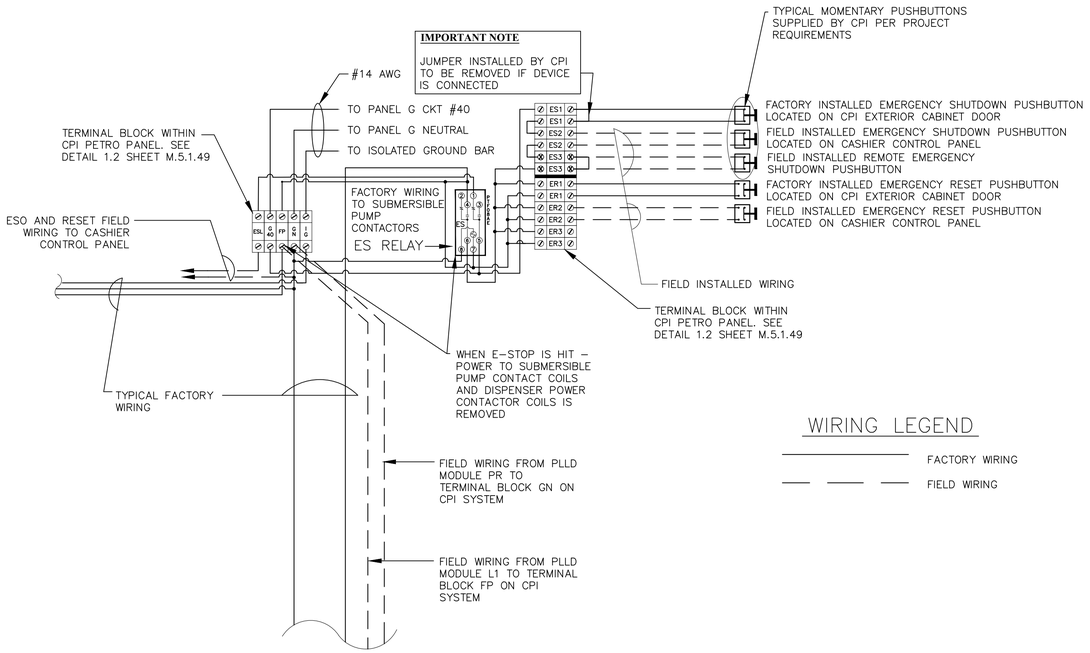

F: EMERGENCY STOP WIRING SCHEMATIC DETAIL

NOT TO SCALE:

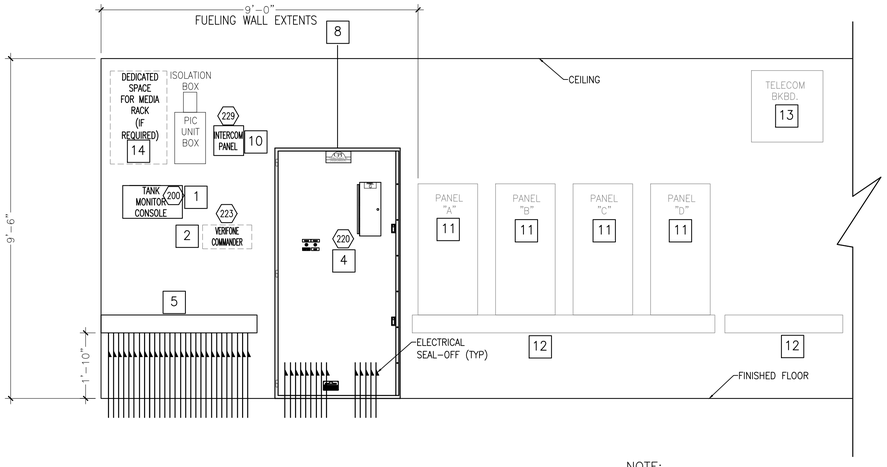

G: TYPICAL BACKROOM ELEVATION IN C-STORE

NOT TO SCALE:

NOTE:
SEE BUILDING DRAWINGS FOR FINAL ELECTRICAL DRAWINGS AND ELECTRICAL PANEL LOCATION.

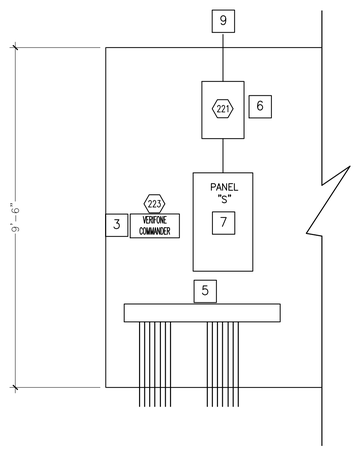

H: TYPICAL MANAGER OFFICE ELEVATION

NOT TO SCALE:

1. TANK/DISPENSER MONITORING CONSOLE
2. VERIFONE SITE COMMANDER UNIT (OPTIONAL LOCATION)
3. VERIFONE SITE COMMANDER UNIT (PREFERRED LOCATION)
4. FUELING DISPENSER MANAGER CABINET (42"Wx84"H - FLOOR MOUNTED):
   1) FUELING ELECTRICAL PANEL "G"
   2) DISPENSER RELAYS/MAINTENANCE SWITCH
   3) DISPENSER DATA/CRIND/INTERCOM/ETHERNET DISCONNECT
   4) TURBINE CONTROLS AND VFC UNITS
   5) EMERGENCY SHUT-OFF SYSTEM
5. 6X6 WIREWAY WITH DIVIDERS
6. 3KVA SURGE SUPRESSOR
7. ELECTRICAL FUELING PANEL "S" (SECURE)
8. CONDUIT ROUTED ABOVE CEILING TO POWER CONDITIONER
9. CONDUIT ROUTED ABOVE CEILING TO PANEL "G"
10. INTERCOM PANEL
11. C-STORE ELECTRICAL PANELS (LOCATION TO BE DETERMINED)
12. C-STORE WIREWAY (LOCATION TO BE DETERMINED)
13. C-STORE COMMUNICATION BACKBOARD (LOCATION TO BE DETERMINED)
14. DEDICATED AREA FOR DISPENSER MEDIA RACK/CABINET, IF REQUIRED. CHECK WITH BP CONSTRUCTION AND MAINTENANCE COORDINATOR

(XX) NOTE: INDICATES ITEMS FOUND ON MATERIALS LIST SHEET M.5.1.01 & M.5.1.02

CLIENT:

bp

ARCO

BP WEST COAST PRODUCTS, LLC

Barghausen Consulting Engineers, Inc.

18215 72nd Avenue South
Kent, WA 98032
425.251.6222
barghausen.com

NO.	DATE	REVISION DESCRIPTION
1	10/04/23	PERMIT RELEASE
2		
3		
4		
5		
6		
7		
8		
9		
10		
11		
12		

SEAL:

HAL P. GRUBB
STATE OF WASHINGTON
23975
REGISTERED PROFESSIONAL ENGINEER
10/4/2023

DEVELOPMENT INFORMATION:

ARCO NTI

3400 am/pm FUEL CANOPY w/ 6 MPD's

SITE ADDRESS:

SWC S MERIDIAN

@ HIGHWAY 512
PUYALLUP, WASHINGTON

FACILITY #TBD

DESIGNED BY:	NP/RF	ALLIANCE Z&DM:	
CHECKED BY:	OV	BP REPM:	
DRAWN BY:	NP/RF	ALLIANCE PM:	
VERSION:	V-15.0 01/01/2023	PROJECT NO:	21730

DRAWING TITLE:

ELECTRICAL PANEL E-STOP CONTROL WIRING SCHEMATIC AND TYPICAL FUELING ELEVATION

SHEET NO:

M.5.1.48

P:\21000s\21730\mechanical\tanks\21730 M.5.1.48.dwg 10/3/2023 8:45 AM NPHAN

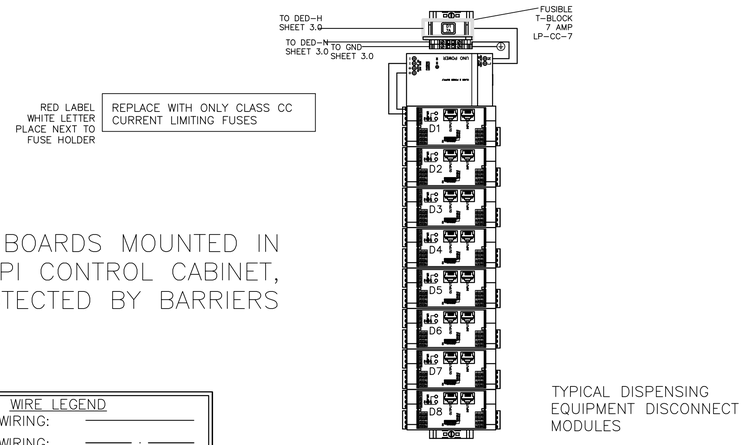

1.0 CPI DED SYSTEM

FACTORY INSTALLED

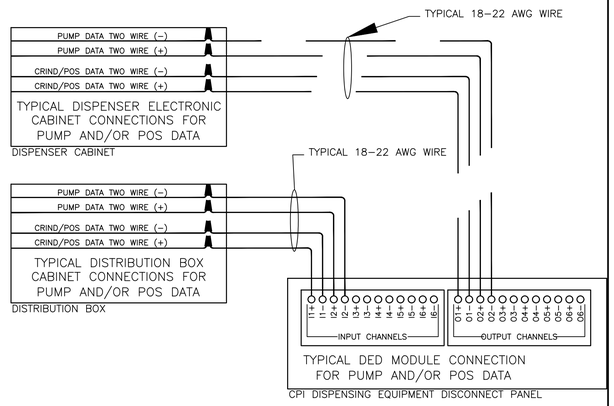

1.1 CPI PUMP DATA DISCONNECT

TYPICAL FIELD WIRING CONNECTION

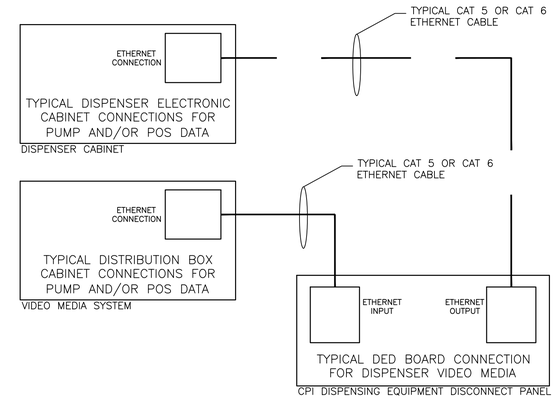

1.2 CPI VIDEO MEDIA DISCONNECT

TYPICAL FIELD WIRING CONNECTION

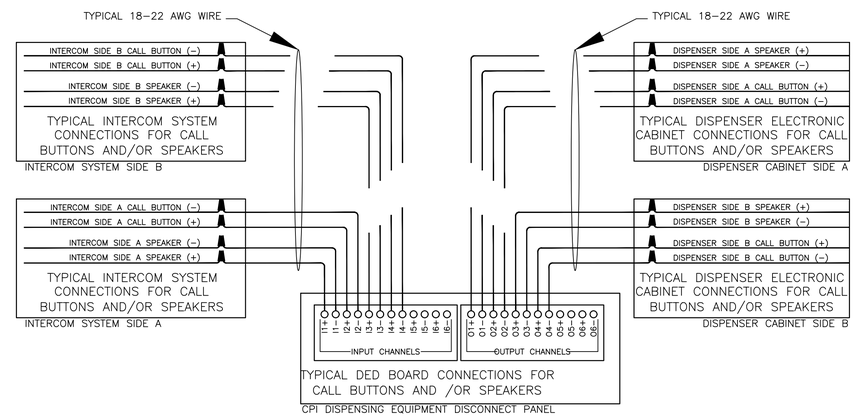

1.3 CPI INTERCOM DATA DISCONNECT

TYPICAL FIELD WIRING CONNECTION

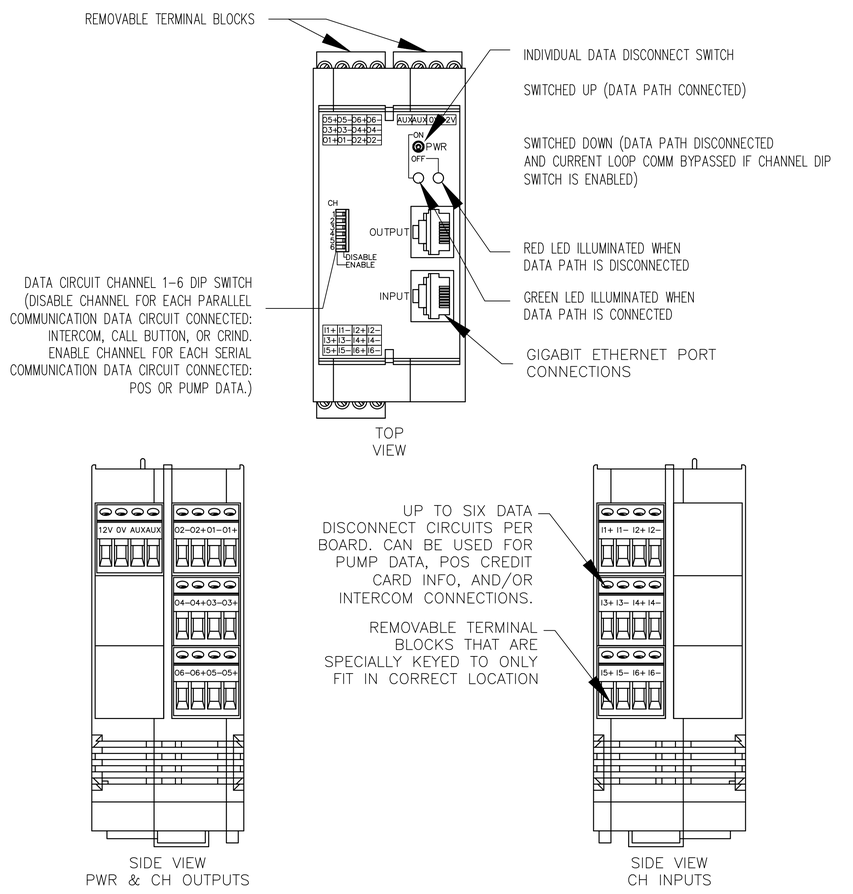

1.6 DED BOARD DESCRIPTION

TYPICAL BOARD

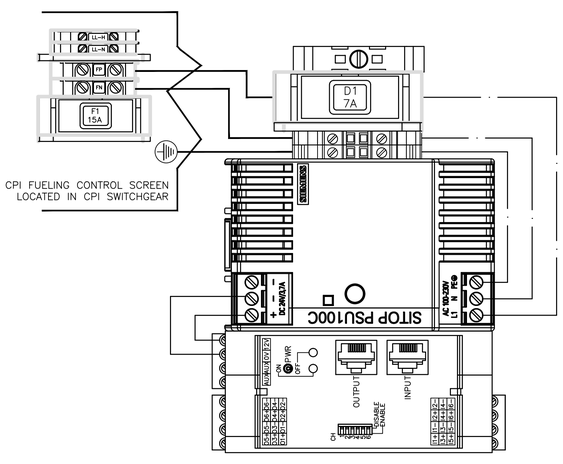

1.4 DED WIRING DIAGRAM

120VAC TO 24VDC

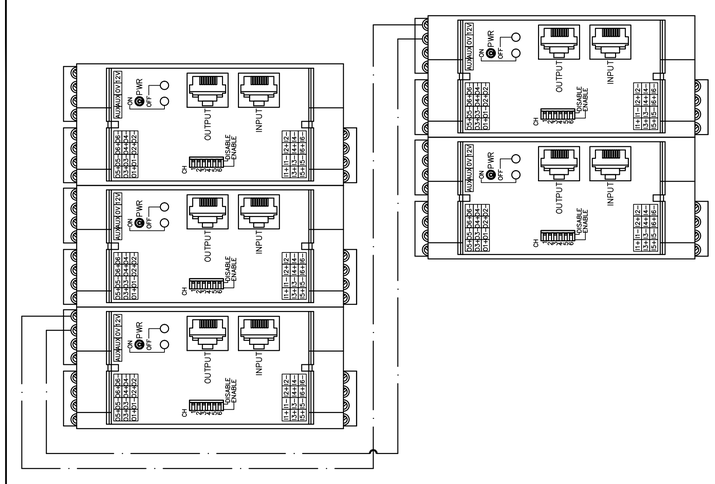

1.5 DED WIRING DIAGRAM

SAMPLE WIRING BETWEEN 2 LINES OF DED UNITS

(XX) NOTE: INDICATES ITEMS FOUND ON MATERIALS LIST SHEET M.5.1.01 & M.5.1.02

CLIENT: bp

ARCO

BP WEST COAST PRODUCTS, LLC

Barghausen Consulting Engineers, Inc.

18215 72nd Avenue South
Kent, WA 98032
425.251.6222
barghausen.com

NO.	DATE	REVISION DESCRIPTION
1	10/04/23	PERMIT RELEASE
2		
3		
4		
5		
6		
7		
8		
9		
10		
11		
12		

SEAL: HAL P. GRUBB, STATE OF WASHINGTON, 23975, REGISTERED PROFESSIONAL ENGINEER, 10/4/2023

DEVELOPMENT INFORMATION:

ARCO NTI

3400 am/pm
FUEL CANOPY w/ 6 MPD's

SITE ADDRESS:

SWC S MERIDIAN
@ HIGHWAY 512
PUYALLUP, WASHINGTON

FACILITY #TBD

DESIGNED BY:	NP/RF	ALLIANCE Z&DM:	
CHECKED BY:	OV	BP REPM:	
DRAWN BY:	NP/RF	ALLIANCE PM:	
VERSION: V-15.0 01/01/2023		PROJECT NO:	21730

DRAWING TITLE:

ELECTRICAL LOW VOLTAGE DISCONNECT FOR DATA/INTERCOM/ETHERNET WIRING DIAGRAMS

SHEET NO:

M.5.1.49

F:\21000s\21730\mechanical\tanks\21730 M.5.1.49.dwg 10/3/2023 8:45 AM NPHAN

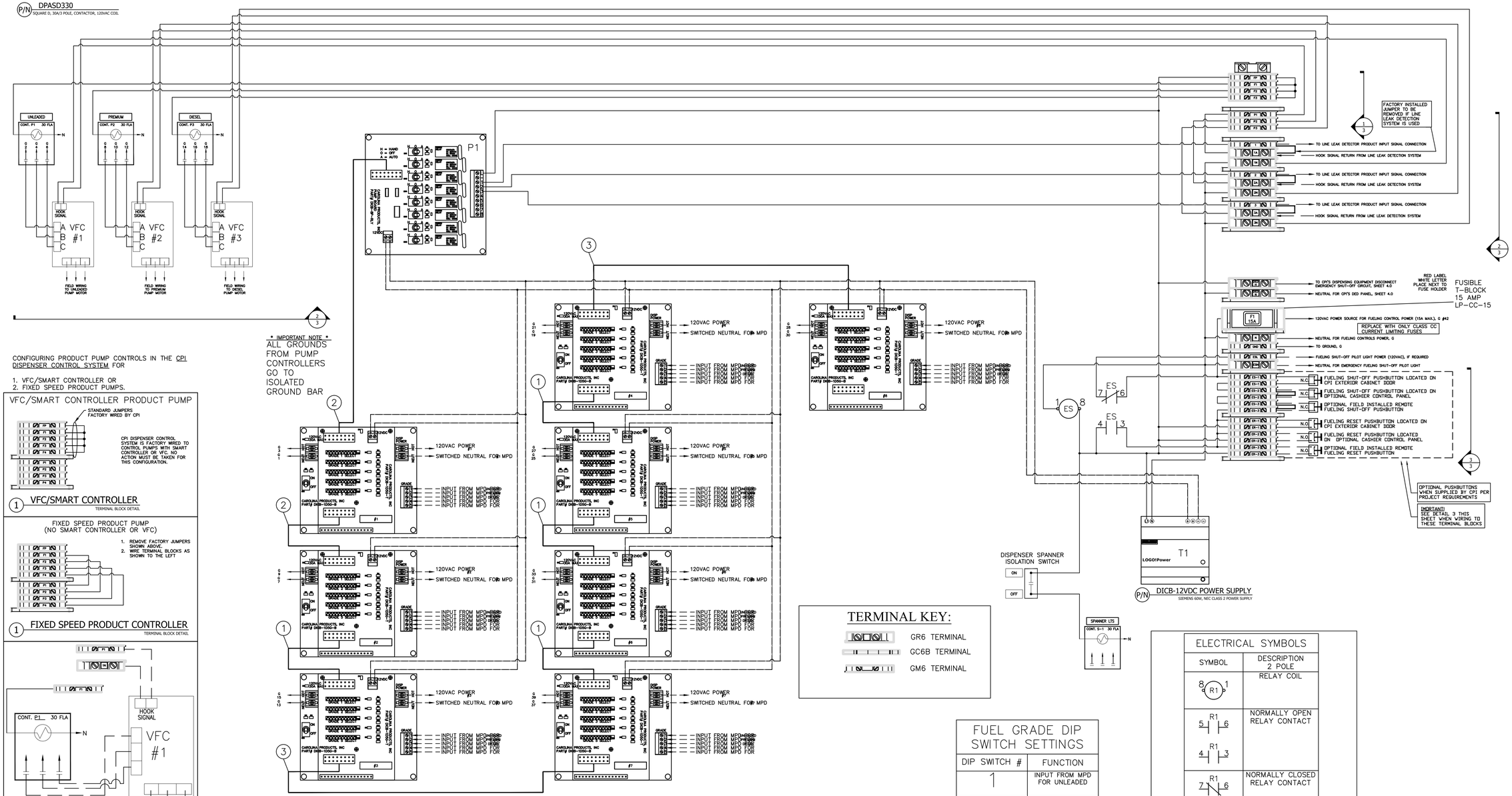

CONFIGURING PRODUCT PUMP CONTROLS IN THE CPI DISPENSER CONTROL SYSTEM FOR

1. VFC/SMART CONTROLLER OR
2. FIXED SPEED PRODUCT PUMPS.

VFC/SMART CONTROLLER PRODUCT PUMP

1 VFC/SMART CONTROLLER
TERMINAL BLOCK DETAIL

FIXED SPEED PRODUCT PUMP (NO SMART CONTROLLER OR VFC)

1. REMOVE FACTORY JUMPERS SHOWN ABOVE.
2. WIRE TERMINAL BLOCKS AS SHOWN TO THE LEFT

1 FIXED SPEED PRODUCT CONTROLLER
TERMINAL BLOCK DETAIL

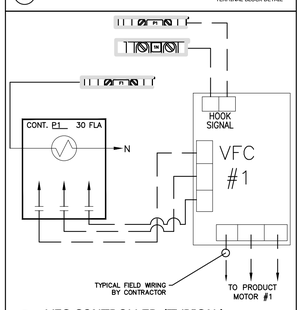

2 VFC CONTROLLER (TYPICAL)
FACTORY WIRING DETAIL

IMPORTANT NOTE

JUMPER INSTALLED BY CPI. REMOVE ONLY IF FUELING SHUT-OFF DEVICE IS CONNECTED.

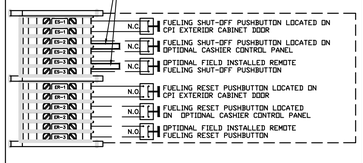

3 PUSHBUTTON CONNECTIONS
WIRING DETAIL

FUELING CONTROLS BYPASS OPERATION

THE FOLLOWING DESCRIPTION OUTLINES THE PROCEDURE FOR BYPASSING THE AUTOMATIC FUELING CONTROLS IN THE EVENT OF A FAILURE IN THE AUTOMATIC CONTROLS. REFER TO THE MANUAL INSIDE THE CPI SYSTEM FOR A MORE DETAILED PROCEDURE DESCRIPTION.

1. REFER TO MANUAL LOCATED IN BINDER INSIDE CPI SYSTEM.
2. TURN PRODUCT SWITCHES FOR SUBMERSIBLE PUMPS OFF.
3. TURN OFF POWER TO VFC.
4. LOCATE DIP SWITCH BANK SW6 (ON VFC CONTROLLER) AND SWITCH POLE 1 TO THE ON POSITION.
5. RESTORE POWER TO VFC.
6. PLACE PRODUCT SWITCHES INTO THE MANUAL POSITION. (LOCATED ON CPI CONTROL SCREEN)
7. CALL STORE MAINTENANCE AND CPI IMMEDIATELY TO REPORT PROBLEM AND GET REPLACEMENT PARTS SHIPPED.

IMPORTANT NOTE:

ONCE THE AUTOMATIC FUELING CONTROL FAILURE HAS BEEN REPAIRED, SWITCH POLE 1 ON BANK SW6 (VFC CONTROLLER) MUST BE RETURNED TO THE OFF POSITION.

WIRE LEGEND:

DASHED	FIELD
SOLID	14AWG
DASHED-DOT	18AWG

TERMINAL KEY:

- GR6 TERMINAL
- GC6B TERMINAL
- GM6 TERMINAL

FUEL GRADE DIP SWITCH SETTINGS

DIP SWITCH #	FUNCTION
1	INPUT FROM MPD FOR UNLEADED
2	INPUT FROM MPD FOR PREMIUM
3	INPUT FROM MPD FOR DIESEL

CONTACTOR SCHEDULE

CONTACTOR NAME	CONTACTS	AMPERE RATING	COIL VOLTAGE
P1	3 POLE	30 A	120 VAC
P2	3 POLE	30 A	120 VAC
P3	3 POLE	30 A	120 VAC
S-1	3 POLE	30 A	120 VAC

FUSE SCHEDULE (THIS SHEET)

DESIGNATION	SIZE	P/N
F1	15A	LP-CC-15

DICB RIBBON CABLE LENGTH

#	LENGTH
1	4"
2	12"
3	24"

ELECTRICAL SYMBOLS

SYMBOL	DESCRIPTION 2 POLE
8 R1 1	RELAY COIL
5 R1 6 / 4 R1 3	NORMALLY OPEN RELAY CONTACT
7 R1 6 / 2 R1 3	NORMALLY CLOSED RELAY CONTACT

RELAY SCHEDULE

RELAY NAME	CONTACTS	COIL VOLTAGE
ES	2 POLE	120 VAC

P/N RJ2S-120VAC
IDEC, 2 POLE RELAY,120VAC COIL

P/N RJ2 BASE
IDEC, 2 POLE RELAY BASE

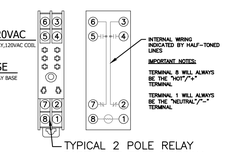

TYPICAL 2 POLE RELAY BASE. USE THIS DIAGRAM TO DETERMINE TERMINAL LABELING

XX NOTE: INDICATES ITEMS FOUND ON MATERIALS LIST SHEET M.5.1.01 & M.5.1.02

CLIENT: bp

ARCO
BP WEST COAST PRODUCTS, LLC

Barghausen Consulting Engineers, Inc.
18215 72nd Avenue South
Kent, WA 98032
425.251.6222
barghausen.com

NO.	DATE	REVISION DESCRIPTION
1	10/04/23	PERMIT RELEASE
2		
3		
4		
5		
6		
7		
8		
9		
10		
11		
12		

SEAL:

HAL P. GRUBB, STATE OF WASHINGTON, 23975, REGISTERED PROFESSIONAL ENGINEER
10/4/2023

DEVELOPMENT INFORMATION:

ARCO NTI
3400 am/pm FUEL CANOPY w/ 6 MPD's

SITE ADDRESS:

SWC S MERIDIAN
@ HIGHWAY 512
PUYALLUP, WASHINGTON

FACILITY #TBD

DESIGNED BY:	NP/RF	ALLIANCE ZADM:	
CHECKED BY:	OV	BP REPM:	
DRAWN BY:	NP/RF	ALLIANCE PM:	
VERSION:	V-15.0 01/01/2023	PROJECT NO:	21730

DRAWING TITLE:

EMERGENCY SHUTDOWN SCHEMATIC FUELING CONTROLS W/ VFC's

SHEET NO:

M.5.1.50

P:\21000s\21730\mechanical\tanks\21730 M.5.1.50.dwg 10/3/2023 8:48 AM NPHAN