FULL SIZED LEDGIBLE **COLOR** PLANS ARE REQUIRED TO BE PROVIDED BY THE PERMITTEE ON SITE FOR ALL INSPECTIONS **(MIN. PLAN SIZE 24" X 36")**

Approval of submitted plans is not an approval of omissions or oversights by this office or noncompliance with any applicable regulations of local government. The contractor is responsible for making sure that the building complies with all applicable codes and regulations of the local government.

City of Puyallup Building ACCEPTED
JMontgomery
01/23/2024
12:25:19 PM

City of Puyallup Planning Division APPROVED
See permit conditions.
NComstock
02/20/2024
2:27:04 PM

GENERAL STRUCTURAL NOTES

(THE FOLLOWING APPLY UNLESS NOTED OTHERWISE ON THE DRAWINGS.)

CRITERIA

ALL MATERIALS, WORKMANSHIP, DESIGN, AND CONSTRUCTION SHALL CONFORM TO THE DRAWINGS, SPECIFICATIONS, AND THE INTERNATIONAL BUILDING CODE (IBC), 2018 EDITION.

LOAD TYPE	ENGINEERING CRITERIA
HOLLOWCORE PLANK	
SUPERIMPOSED DEAD LOAD	DEPTH OF SOIL PER PLAN SOIL WEIGHT = 125 PSF
SUPERIMPOSED LIVE LOAD	PER PLAN NOTES

GENERAL CONDITIONS

STRUCTURAL DRAWINGS SHALL BE USED IN CONJUNCTION WITH CIVIL DRAWINGS FOR BIDDING AND CONSTRUCTION. CONTRACTOR SHALL VERIFY ALL DIMENSIONS AND CONDITIONS WITH CIVIL ENGINEER'S DRAWINGS FOR COMPATIBILITY AND SHALL NOTIFY CIVIL ENGINEER OF ALL DISCREPANCIES PRIOR TO CONSTRUCTION.

IN THE EVENT OF CONFLICTS BETWEEN THE STRUCTURAL DRAWINGS AND THE PROJECT SPECIFICATIONS, THE STRUCTURAL DRAWINGS SHALL CONTROL.

CONTRACTOR SHALL PROVIDE TEMPORARY BRACING FOR THE STRUCTURE AND STRUCTURAL COMPONENTS UNTIL ALL FINAL CONNECTIONS HAVE BEEN COMPLETED IN ACCORDANCE WITH THESE DRAWINGS. THE CONTRACTOR IS RESPONSIBLE FOR ALL SAFETY PRECAUTIONS AND THE METHODS, TECHNIQUES, SEQUENCES OR PROCEDURES REQUIRED TO PERFORM THE WORK.

DRAWINGS INDICATE GENERAL AND TYPICAL DETAILS OF CONSTRUCTION. WHERE CONDITIONS ARE NOT SPECIFICALLY INDICATED BUT ARE OF SIMILAR CHARACTER TO DETAILS SHOWN, SIMILAR DETAILS OF CONSTRUCTION SHALL BE USED, SUBJECT TO REVIEW AND APPROVAL BY THE ARCHITECT AND THE STRUCTURAL ENGINEER.

CONTRACTOR-INITIATED CHANGES SHALL BE SUBMITTED IN WRITING TO THE ARCHITECT AND STRUCTURAL ENGINEER FOR APPROVAL PRIOR TO FABRICATION OR CONSTRUCTION. CHANGES SHOWN ON SHOP DRAWINGS ONLY WILL NOT SATISFY THIS REQUIREMENT.

THE CONTRACTOR SHALL COMPLY WITH ALL APPLICABLE OSHA REGULATIONS. SHORING AND RESHORING SHALL BE DESIGNED BY A QUALIFIED DESIGNER AND THE ERECTED SHORING SHALL BE INSPECTED BY A REGISTERED STRUCTURAL ENGINEER, EXPERIENCED IN THE DESIGN OF SHORING SYSTEMS, WHO SHALL SUBMIT AN INSPECTION REPORT TO THE ARCHITECT. FORMWORK SHALL NOT BE REMOVED UNTIL THE CONCRETE HAS REACHED ITS DESIGN STRENGTH AS INDICATED IN THE CONCRETE NOTES.

REQUIRED SUBMITTALS

SHOP DRAWINGS FOR THE FOLLOWING ITEMS SHALL BE SUBMITTED TO THE ARCHITECT AND STRUCTURAL ENGINEER FOR REVIEW TWO WEEKS PRIOR TO FABRICATION:

SUBMITTAL	SUBMITTAL REQUIRED	STAMPED BY REGISTERED ENGINEER	ENGINEERING CALCULATIONS
CONCRETE REINFORCING	YES	NOT REQUIRED	NOT REQUIRED
CONCRETE HOLLOWCORE PLANKS	YES	YES	YES
STEEL ACCESS GRATE AND SUPPORT BEAM	YES	YES	YES

SUBMITTAL REVIEW OF BIDDER-DESIGNED AND PRE-ENGINEERED STRUCTURAL AND NON-STRUCTURAL COMPONENTS AND EQUIPMENT AND SUPPORTS SHALL INCLUDE THE STAMP OF THE PROFESSIONAL ENGINEER WHO PERFORMED THE DESIGN AS INDICATED ABOVE. THE ENGINEER SHALL BE REGISTERED IN THE STATE OF WASHINGTON. THE SUBMITTAL WILL BE SUBJECT TO A CURSORY REVIEW BY THE ENGINEER OF RECORD FOR LOADS IMPOSED ON THE BASIC STRUCTURE. THE COMPONENT DESIGNER IS RESPONSIBLE FOR CODE CONFORMANCE AND ALL NECESSARY CONNECTIONS NOT SPECIFICALLY CALLED OUT ON THE ARCHITECTURAL OR STRUCTURAL DRAWINGS. THE FOLLOWING CERTIFICATION SHALL BE INCLUDED ADJACENT TO THE ENGINEER'S STAMP ON ALL SUBMITTALS:

> I, _____, A LICENSED ENGINEER IN THE STATE OF WASHINGTON, DO HEREBY CERTIFY THAT I HAVE REVIEWED THE CONTRACT DOCUMENTS AND HAVE TO THE BEST OF MY KNOWLEDGE INCORPORATED ALL OF THE DESIGN CRITERIA CONTAINED THEREIN.

SHOP DRAWING REVIEW: DIMENSIONS AND QUANTITIES ARE NOT REVIEWED BY THE ENGINEER OF RECORD AND THEREFORE MUST BE VERIFIED BY THE CONTRACTOR. THE CONTRACTOR SHALL REVIEW AND STAMP DRAWINGS PRIOR TO REVIEW BY ENGINEER OF RECORD. SUBMITTALS SHALL INCLUDE A REPRODUCIBLE AND ONE COPY. THE REPRODUCIBLE WILL BE MARKED AND RETURNED.

IN THE EVENT OF DEVIATIONS, DISCREPANCIES, OR CONFLICTS BETWEEN APPROVED SHOP DRAWING SUBMITTALS AND THE CONTRACT DOCUMENTS, THE DESIGN DRAWINGS AND SPECIFICATIONS SHALL CONTROL.

DEFERRED SUBMITTALS

THE FOLLOWING DEFERRED SUBMITTAL ITEMS SHALL BE SUBMITTED TO THE ARCHITECT AND ENGINEER OF RECORD FOR APPROVAL PRIOR TO SUBMITTAL TO THE BUILDING DEPARTMENT FOR REVIEW:

DEFERRED SUBMITTAL [1]	STAMP [2] REQUIRED	EOR APPROVAL REQUIRED	CALCULATIONS AND DRAWINGS REQUIRED
CONCRETE HOLLOWCORE PLANKS	YES	YES	YES
STEEL ACCESS GRATE AND SUPPORT BEAM	YES	YES	YES

NOTES:
1. ITEM(S) NOT INCLUDED IN THIS BUILDING PERMIT.
2. ENGINEER REGISTERED IN THE STATE OF WASHINGTON.

GEOTECHNICAL

FOUNDATION NOTES: SUBGRADE PREPARATION INCLUDING DRAINAGE, EXCAVATION, COMPACTION, AND FILLING REQUIREMENTS, SHALL CONFORM STRICTLY WITH RECOMMENDATIONS GIVEN IN THE SOILS REPORT OR AS DIRECTED BY THE GEOTECHNICAL ENGINEER.

FOOTINGS SHALL BEAR ON FIRM, UNDISTURBED EARTH OR CONTROLLED, COMPACTED STRUCTURAL FILL, AT LEAST 18" BELOW LOWEST ADJACENT FINISHED GRADE. FOOTING DEPTHS/ELEVATIONS SHOWN ON THE DRAWINGS ARE MINIMUM AND FOR GUIDANCE ONLY; THE ACTUAL ELEVATIONS OF FOOTINGS SHALL BE ESTABLISHED BY THE CONTRACTOR IN THE FIELD WORKING WITH THE TESTING LAB AND GEOTECHNICAL ENGINEER.

BACKFILL BEHIND ALL RETAINING WALLS WITH FREE DRAINING, GRANULAR FILL AND PROVIDE FOR SUBSURFACE DRAINAGE AS NOTED IN THE SOILS REPORT.

ALLOWABLE SOIL PRESSURE . . . . . 1500 PSF
ACTIVE EARTH PRESSURE . . . . . 35 PCF (LEVEL BACKFILL)
AT-REST EARTH PRESSURE (SATURATED) . . . . . 80 PCF (LEVEL BACKFILL)
PASSIVE EARTH PRESSURE . . . . . 350 PCF
TRAFFIC SURCHARGE . . . . . AS NOTED ON PLAN
SEISMIC SURCHARGE . . . . . 25*H (H = HEIGHT OF WALL)
COEFFICIENT OF FRICTION 0.35

GEOTECHNICAL REPORT REFERENCE: KRAZAN & ASSOCIATES, INC. PROJECT NUMBER 062-22010 DATED MAY 6, 2022 AND SUPPLEMENTAL INFORMATION PROVIDED OCTOBER 4, 2023.

THE DESIGN SHOWN IN THESE DRAWINGS SHALL BE REVIEWED BY THE GEOTECHNICAL ENGINEER FOR COMPLIANCE WITH THE ABOVE REFERENCED SOILS REPORT. IN THE EVENT OF CONFLICTS BETWEEN THESE DRAWINGS AND THE RECOMMENDATIONS OF THE GEOTECHNICAL ENGINEER, THE GEOTECHNICAL ENGINEER'S RECOMMENDATIONS SHALL CONTROL. THE CONTRACTOR SHALL IMMEDIATELY NOTIFY THE STRUCTURAL ENGINEER FOR POSSIBLE REDESIGN.

DIVISION 3: CONCRETE

CONCRETE SHALL BE MIXED, PROPORTIONED, CONVEYED AND PLACED IN ACCORDANCE WITH IBC SECTION 1905 AND ACI 301. STRENGTHS AT 28 DAYS AND MIX CRITERIA SHALL BE AS FOLLOWS:

TYPE OF CONCRETE CONSTRUCTION	MIN. COMPRESSIVE STRENGTH, f'c AT 28 DAYS	MAX. W/C RATIO	MINIMUM CEMENT CONTENT PER CUBIC YARD
SLABS ON GRADE	3000 PSI	0.63	5½ SACKS
CONCRETE WALLS, COLUMNS & CIP LID	4500 PSI	0.48	6½ SACKS
CURBS AT 5'x10' ACCESS GRATES	4500 PSI	0.48	6½ SACKS

THE MINIMUM AMOUNTS OF CEMENTITIOUS MATERIAL MAY BE CHANGED IF A CONCRETE MIX DESIGN IS SUBMITTED TO THE STRUCTURAL ENGINEER AND THE BUILDING OFFICIAL FOR APPROVAL TWO WEEKS PRIOR TO PLACING ANY CONCRETE. THE MIX DESIGN SHALL INCLUDE THE AMOUNTS OF CEMENT, FINE AND COARSE AGGREGATE, WATER AND ADMIXTURES, AS WELL AS THE WATER-CEMENT RATIO, SLUMP, CONCRETE YIELD AND SUBSTANTIATING STRENGTH DATA IN ACCORDANCE WITH THE LATEST EDITION OF ACI 318, CHAPTER 5. THE REVIEW OF MIX DESIGN SUBMITTALS BY THE ENGINEER OF RECORD INDICATES ONLY THE INFORMATION PRESENTED CONFORMS GENERALLY WITH CONTRACT DOCUMENTS. CONTRACTOR MAINTAINS FULL RESPONSIBILITY FOR SPECIFIED PERFORMANCE.

ALL CONCRETE WITH SURFACES EXPOSED TO STANDING WATER SHALL BE AIR-ENTRAINED WITH AN AIR-CONTENT PER ACI.

REINFORCING STEEL SHALL CONFORM TO ASTM A615 (INCLUDING SUPPLEMENT S1), GRADE 60, f_y = 60,000 PSI.

ALL REINFORCING STEEL SHALL BE ACCURATELY PLACED AND ADEQUATELY SUPPORTED BEFORE CONCRETE IS PLACED. "WET-SETTING" BARS IS NOT PERMITTED.

CONCRETE PROTECTION (COVER) FOR REINFORCING STEEL SHALL BE AS FOLLOWS:

CONDITION	BAR SIZES	CLEAR COVER
UNFORMED SURFACES CAST AGAINST EARTH	ALL	3 INCHES
FORMED AND FINISHED SURFACES EXPOSED TO EARTH OR WEATHER	#5 OR SMALLER #6 OR LARGER	1½ INCHES 2 INCHES
COLUMN AND BEAM REINFORCEMENT INCLUDING TIES AND STIRRUPS	ALL	1½ INCHES
INTERIOR SURFACES OF WALLS AND SLABS	#11 OR SMALLER	¾ INCHES

Special Inspection required per Chapter 17 of the 2018 IBC
PROVIDE ALL REPORTS TO BUILDING INSPECTOR

STATEMENT OF SPECIAL INSPECTIONS

SPECIAL INSPECTIONS SHALL BE PERFORMED BY AN APPROVED AGENCY FOR THE FOLLOWING WORK ITEMS:

CONCRETE - PER IBC 2018 TABLE 1705.3

VERIFCATION AND INSPECTION	CONTINUOUS	PERIODIC	REFERENCE STANDARD[a]	IBC REFERENCE
1. INSPECTION OF REINFORCING STEEL, INCLUDING PRESTRESSING TENDONS AND PLACEMENT	--	X	ACI 318: 3.5, 7.1-7.7	1910.4
2. INSPECTION OF ANCHORS CAST IN CONCRETE WHERE ALLOWABLE LOADS HAVE BEEN INCREASED OR WHERE STRENGTH DESIGN IS USED	--	X	ACI 318: 8.1.3, 21.1.8	1908.5 1909.1
3. INSPECTION OF ANCHORS POST INSTALLED IN HARDENED CONCRETE MEMBERS[b]	--	X	ACI 318: 3.8.6, 8.1.3, 21.1.8	1909.1
4. VERIFYING USE OF REQUIRED MIX DESIGN	--	X	ACI 318: CH. 4, 5.2-5.4	1904.2, 1910.2. 1910.3
5. AT THE TIME FRESH CONCRETE IS SAMPLED TO FABRICATE SPECIMENS FOR STRENGTH TESTS, PERFORM SLUMP AND AIR CONTENT TESTS, AND DETERMINE THE TEMPERATURE OF THE CONCRETE	X	--	ASTM C 172 ASTM C 31 ACI 318: 5.6, 5.8	1910.10
6. INSPECTION OF CONCRETE PLACEMENT FOR PROPER APPLICATION TECHNIQUE	X	--	ACI 318: 5.9, 5.10	1910.6, 1910.7, 1910.8
7. INSPECTION FOR MAINTENANCE OF SPECIFIED CURING TEMPERATURE AND TECHNIQUES	--	X	ACI 318: 5.11-5.13	1910.9
8. INSPECTION OF PRESTESSED CONCRETE:[c] a. APPLICATION OF PRESTRESSING FORCES b. GROUTING OF BONDED PRESTRESSING TENDONS IN THE SEISMIC FORCE RESISTING SYSTEM	 X X	--	 ACI 318: 18.20 ACI 318: 18.18.4	--
9. ERECTION OF PRECAST CONCRETE MEMBERS	--	X	ACI 318: CH. 16	--
10. VERIFCATION OF IN-SITU CONCRETE STRENGTH PRIOR TO REMOVAL OF SHORES AND FORMS FROM BEAMS AND STRUCTURAL SLABS	--	X	ACI 318: 6.2	--
11. INSPECT FORMWORK FOR SHAPE, LOCATION AND DIMENSIONS OF THE CONCRETE MEMBER BEING FORMED	--	X	ACI 318: 6.1.1	--

a. WHERE APPLICABLE, SEE ALSO SECTION 1705.11, SPECIAL INSPECTIONS FOR SEISMIC RESISTANCE.
b. SPECIFIC REQUIREMENTS FOR SPECIAL INSPECTION SHALL BE INCLUDED IN THE RESEARCH REPORT FOR THE ANCHOR ISSUED BY AN APPROVED SOURCE IN ACCORDANCE WITH ACI 355.2 OR OTHER QUALIFIED PROCEDURES. WHERE SPECIFIC REQUIREMENTS ARE NOT PROVIDED, SPECIAL INSPECTION REQUIREMENTS SHALL BE SPECIFIED BY THE REGISTERED DESIGN PROFESSIONAL AND SHALL BE APPROVED BY THE BUILDING OFFICIAL PRIOR TO THE COMMENCEMENT OF THE WORK.
c. PER IBC SECTION 1704.2.5.2, SPECIAL INSPECTION OF PRESTRESSED HOLLOWCORE CONCRETE PLANK IS NOT REQUIRED WHERE THE WORK IS DONE ON THE PREMISES OF A FABRICATOR REGISTERED AND APPROVED TO PERFORM SUCH WORK WITHOUT SPECIAL INSPECTION. AT THE COMPLETION OF FABRICATION, THE CONTRACTOR SHALL SUBMIT TO THE BUILDING OFFICIAL A CERTIFICATE OF COMPLIANCE FROM THE APPROVED FABRICATOR STATING THAT THE WORK WAS PERFORMED IN ACCORDANCE WITH THE APPROVED CONSTRUCTION DOCUMENTS.

SOILS - PER IBC 2018 TABLE 1705.6

VERIFCATION AND INSPECTION TASK	CONTINUOUS DURING TASK	PERIODIC DURING TASK
1. VERIFY MATERIALS BELOW SHALLOW FOUNDATIONS ARE ADEQUATE TO ACHIEVE THE DESIGN BEARING CAPACITY	--	X
2. VERIFY EXCAVATIONS ARE EXTENDED TO PROPER DEPTH AND HAVE REACHED PROPER MATERIAL	--	X
3. PERFORM CLASSIFICATION AND TESTING OF COMPACTED FILL MATERIALS	--	X
4. VERIFY USE OF PROPER MATERIALS, DENSITIES AND LIFT THICKNESSES DURING PLACEMENT AND COMPACTION OF COMPACTED FILL	X	--
5. PRIOR TO PLACEMENT OF COMPACTED FILL, OBSERVE SUBGRADE AND VERIFY THAT SITE HAS BEEN PREPARED PROPERLY	--	X

VISSER ENGINEERING
33801 1st WAY SOUTH
SUITE 251
FEDERAL WAY, WA. 98003
VOICE: (253) 835-0810
FAX: (253) 835-0813

ELECTRONICALLY SIGNED 10/06/23
MIKE VISSER STATE OF WASHINGTON 48021 REGISTERED PROFESSIONAL ENGINEER

NO.	DATE	REVISION
	10/06/23	RELEASED FOR PERMIT SUBMITTAL

CIVIL BACKGROUNDS DATED: 08-25-23

CIVIL ENGINEER:
BARGHAUSEN CONSULTING ENGINEERS, INC.
18215 72nd AVENUE SOUTH
KENT, WA 98032

PRCNC20240013

PROJECT:
ARCO amom PUYALLUP
STORMWATER DETENTION VAULT
14422 SOUTH MERIDIAN AVE.
PUYALLUP, WA

SHEET TITLE
VAULT PLANS AND GENERAL STRUCTURAL NOTES

23-045
VEC PROJECT NO.:
ADD
DRAWN:
ADD
DESIGNED:
MDV
CHECKED:
10-06-23
ISSUE DATE:
SHEET NUMBER:
CS1

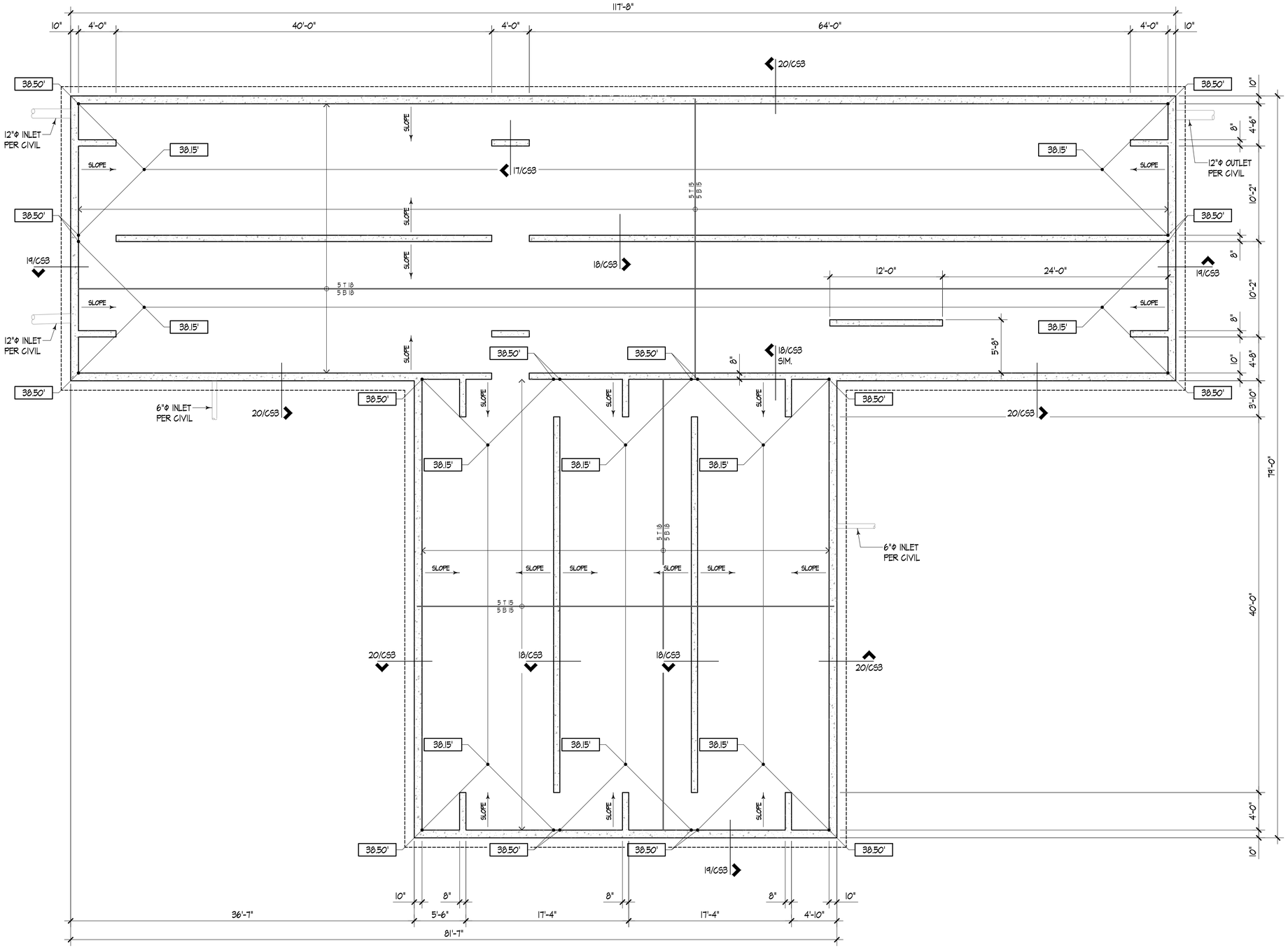

VAULT FOUNDATION PLAN

3/16" = 1'-0"

PLAN NOTES:

1. MAT SLAB FOUNDATION DESIGN IS BASED ON NATIVE UNDISTURBED SOIL WITH 1500 PSF ALLOWABLE BEARING PER THE GEOTECHNICAL REPORT.

   THIS VAULT HAS BEEN DESIGNED FOR HYDROSTATIC FORCES. PREPARED EXCAVATIONS MUST BE INSPECTED AND APPROVED BY A GEOTECHNICAL ENGINEER.

2. THE VAULT BOTTOM SHALL BE A 30-INCH CONCRETE MAT FOOTING REINFORCED PER PLAN. PLACE SLAB ON FREE DRAINING GRANULAR FILL.

   SLAB SPOT ELEVATIONS PER CIVIL ARE SHOWN ON THE DRAWINGS. COORDINATE ALL SLAB SLOPE REQUIREMENTS WITH CIVIL DRAWINGS.

3. VAULT LID SHALL BE COMPRISED OF 12½" PRECAST CONCRETE HOLLOW CORE PLANKS. TOP OF PLANK ELEVATION IS PER PLAN.

   PLANKS SHALL BE DESIGNED FOR SOIL COVER PER PLAN PLUS THE MAXIMUM LOAD EFFECTS OF:

   250 PSF LIVE LOAD
   HS20-44 VEHICLE LOAD
   45-KIP FIRE TRUCK OUTRIGGER LOAD

   SUBMIT PLANK DESIGN CALCULATIONS PREPARED AND STAMPED BY AN ENGINEER REGISTERED IN THE STATE OF WASHINGTON IN ACCORDANCE WITH THE QUALITY CONTROL SECTION OF THE GENERAL STRUCTURAL NOTES.

4. PLANKS SHALL BEAR ON CONTINUOUS BEARING STRIPS SUPPLIED BY THE PLANK MANUFACTURER. THE PLANK SUPPLIER SHALL ALSO PROVIDE ALL REQUIRED VOID DAMS WHERE PLANK CELLS ARE TO BE SOLID GROUTED INCLUDING REQUIRED GROUT STRENGTH.

   CONCRETE PRECAST PLANKS SHALL BE MANUFACTURED ON THE PREMISES OF AN APPROVED FABRICATOR UNDER CRITERIA SET FORTH IN SECTION 1701 OF THE I.B.C.

   ALL PLANK JOINTS SHALL BE GROUTED PER 2/CS3. GROUT SHALL BE FURNISHED BY AN APPROVED MANUFACTURER AND SHALL BE MIXED AND PLACED IN STRICT ACCORDANCE WITH THE MANUFACTURERS PUBLISHED RECOMMENDATIONS

5. SEE DETAIL 3/CS3 FOR REINFORCEMENT AROUND WALL OPENINGS FOR INLET AND OUTLET PIPES. COORDINATE LOCATION OF PIPES WITH CIVIL DRAWINGS.

   THE STORM DRAINAGE SYSTEM SHALL NOT BE CONNECTED UNTIL ALL BACKFILL OPERATIONS HAVE BEEN COMPLETED.

   DO NOT BACKFILL AROUND VAULT UNTIL ROOF PLANKS AND CLOSURES ARE COMPLETED IN ACCORDANCE WITH THESE DRAWINGS AND CONCRETE HAS REACHED ITS DESIGN STRENGTH.

   PROVIDE 24" DIAMETER VENTED ACCESS MANHOLE WITH RING LOCKING COVER AND CONCRETE SPACERS TO GRADE. PROVIDE LADDER PER CIVIL DRAWINGS.

   REINFORCE WALL CORNERS AND INTERSECTIONS PER 1/CS3.

6. STEEL GRATED ACCESS PANELS SHALL BE DESIGNED BY AN ENGINEER REGISTERED IN THE STATE OF WASHINGTON FOR THE MAXIMUM SHEARS AND BENDING MOMENTS RESULTING FROM AN APPLED LIVE LOAD OF 250 PSF OR HS20-44 LOADING. GRATING SHALL MEET ALL JURISDICTIONAL REQUIREMENTS. REFER TO CIVIL DRAWINGS FOR MORE INFORMATION.

7. REFER TO CIVIL DRAWINGS FOR PROXIMITY OF STORM VAULT TO PROPERTY LINES. WHERE REQUIRED, CONTRACTOR SHALL OBTAIN PERMISSION TO EXTEND THE EXCAVATION ACROSS THE PROPERTY LINE INTO THE ADJACENT RIGHT-OF-WAY OR PROVIDE SHORING (BY OTHERS).

LEGEND:

- INDICATES MANHOLE ACCESS PER PLAN NOTE #5
- INDICATES FULL HEIGHT CONCRETE WALL
- X/CSX — INDICATES SECTION CUT - SEE REFERENCED DETAIL
- X.X' — INDICATES TOP OF SLAB OR PLANK ELEVATION

BAR LEGEND:

(8) 5 T 15

- QUANTITY (WHERE SPECIFIED)
- BAR SIZE
- "T" TOP, "M" MIDDLE, or "B" BOTTOM
- @ SPACING oc (EQ. SPACE IF NOT SPECIFIED) BAR SPACING IN INCHES

VISSER ENGINEERING
33801 1st WAY SOUTH
SUITE 251
FEDERAL WAY, WA. 98003
VOICE: (253) 835-0810
FAX: (253) 835-0813

ELECTRONICALLY SIGNED 10/06/23

NO.	DATE	REVISION
	10/06/23	RELEASED FOR PERMIT SUBMITTAL

CIVIL BACKGROUNDS DATED: 08-25-23

CIVIL ENGINEER:
BARGHAUSEN CONSULTING ENGINEERS, INC.
18215 72nd AVENUE SOUTH
KENT, WA 98032

PRCNC20240013

PROJECT:
ARCO ampm PUYALLUP
STORMWATER DETENTION VAULT
14402 SOUTH MERIDIAN AVE.
PUYALLUP, WA

SHEET TITLE
VAULT FOUNDATION PLAN

23-045
VEC PROJECT NO.:
ADD
DRAWN:
ADD
DESIGNED:
MDV
CHECKED:
10-06-23
ISSUE DATE:

SHEET NUMBER:
CS2.1

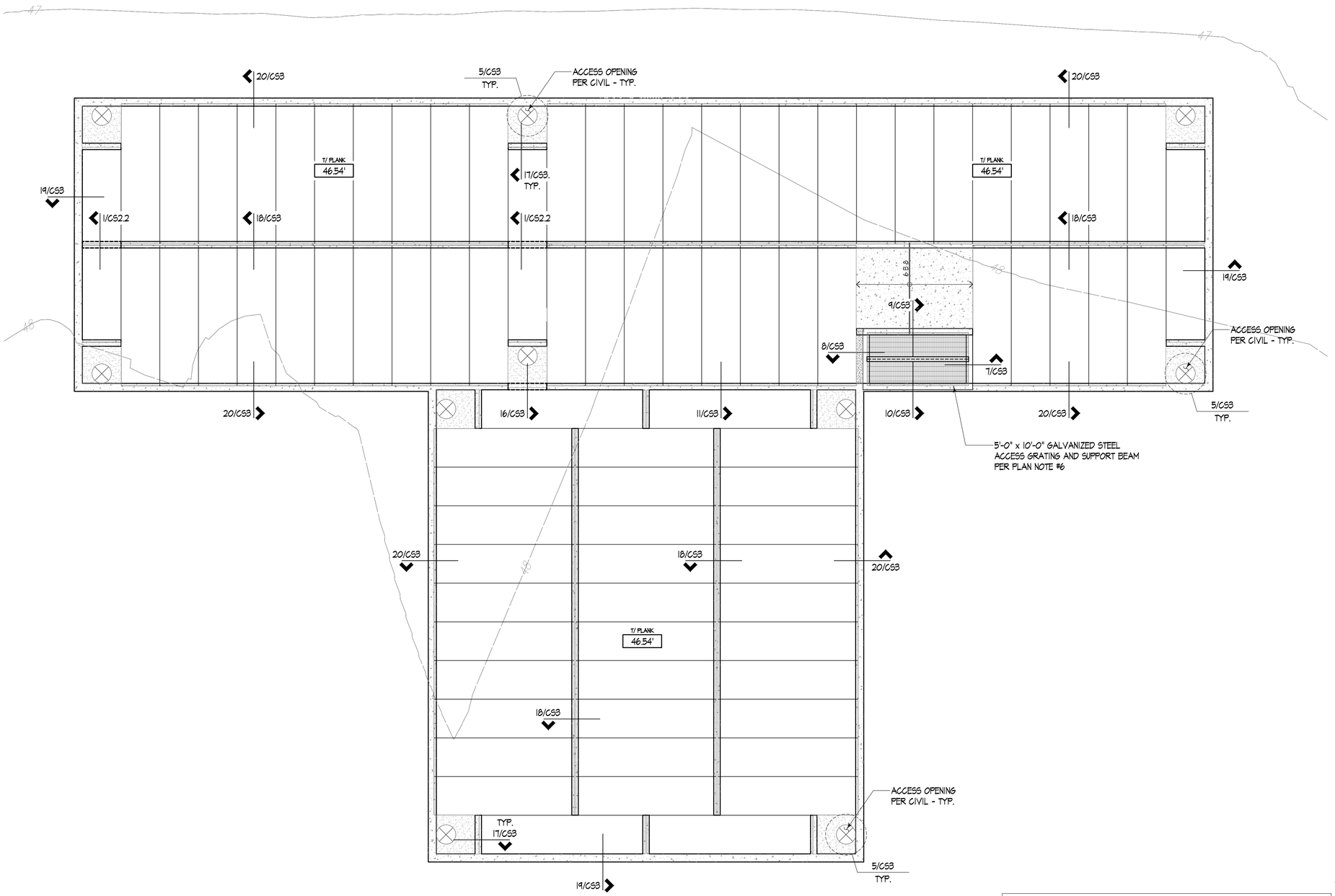

VAULT LID PLAN

3/16" = 1'-0"

PLAN NOTES:

1. MAT SLAB FOUNDATION DESIGN IS BASED ON NATIVE UNDISTURBED SOIL WITH 1500 PSF ALLOWABLE BEARING PER THE GEOTECHNICAL REPORT.

   THIS VAULT HAS BEEN DESIGNED FOR HYDROSTATIC FORCES. PREPARED EXCAVATIONS MUST BE INSPECTED AND APPROVED BY A GEOTECHNICAL ENGINEER.

2. THE VAULT BOTTOM SHALL BE A 30-INCH CONCRETE MAT FOOTING REINFORCED PER PLAN. PLACE SLAB ON FREE DRAINING GRANULAR FILL.

   SLAB SPOT ELEVATIONS PER CIVIL ARE SHOWN ON THE DRAWINGS. COORDINATE ALL SLAB SLOPE REQUIREMENTS WITH CIVIL DRAWINGS.

3. VAULT LID SHALL BE COMPRISED OF 12½" PRECAST CONCRETE HOLLOW CORE PLANKS. TOP OF PLANK ELEVATION IS PER PLAN.

   PLANKS SHALL BE DESIGNED FOR SOIL COVER PER PLAN PLUS THE MAXIMUM LOAD EFFECTS OF:

   250 PSF LIVE LOAD
   HS20-44 VEHICLE LOAD
   45-KIP FIRE TRUCK OUTRIGGER LOAD

   SUBMIT PLANK DESIGN CALCULATIONS PREPARED AND STAMPED BY AN ENGINEER REGISTERED IN THE STATE OF WASHINGTON IN ACCORDANCE WITH THE QUALITY CONTROL SECTION OF THE GENERAL STRUCTURAL NOTES.

4. PLANKS SHALL BEAR ON CONTINUOUS BEARING STRIPS SUPPLIED BY THE PLANK MANUFACTURER. THE PLANK SUPPLIER SHALL ALSO PROVIDE ALL REQUIRED VOID DAMS WHERE PLANK CELLS ARE TO BE SOLID GROUTED INCLUDING REQUIRED GROUT STRENGTH.

   CONCRETE PRECAST PLANKS SHALL BE MANUFACTURED ON THE PREMISES OF AN APPROVED FABRICATOR UNDER CRITERIA SET FORTH IN SECTION 1701 OF THE I.B.C.

   ALL PLANK JOINTS SHALL BE GROUTED PER 2/CS3. GROUT SHALL BE FURNISHED BY AN APPROVED MANUFACTURER AND SHALL BE MIXED AND PLACED IN STRICT ACCORDANCE WITH THE MANUFACTURERS PUBLISHED RECOMMENDATIONS

5. SEE DETAIL 3/CS3 FOR REINFORCEMENT AROUND WALL OPENINGS FOR INLET AND OUTLET PIPES. COORDINATE LOCATION OF PIPES WITH CIVIL DRAWINGS.

   THE STORM DRAINAGE SYSTEM SHALL NOT BE CONNECTED UNTIL ALL BACKFILL OPERATIONS HAVE BEEN COMPLETED.

   DO NOT BACKFILL AROUND VAULT UNTIL ROOF PLANKS AND CLOSURES ARE COMPLETED IN ACCORDANCE WITH THESE DRAWINGS AND CONCRETE HAS REACHED ITS DESIGN STRENGTH.

   PROVIDE 24" DIAMETER VENTED ACCESS MANHOLE WITH RING LOCKING COVER AND CONCRETE SPACERS TO GRADE. PROVIDE LADDER PER CIVIL DRAWINGS.

   REINFORCE WALL CORNERS AND INTERSECTIONS PER 1/CS3.

6. STEEL GRATED ACCESS PANELS SHALL BE DESIGNED BY AN ENGINEER REGISTERED IN THE STATE OF WASHINGTON FOR THE MAXIMUM SHEARS AND BENDING MOMENTS RESULTING FROM AN APPLIED LIVE LOAD OF 250 PSF OR HS20-44 LOADING. GRATING SHALL MEET ALL JURISDICTIONAL REQUIREMENTS. REFER TO CIVIL DRAWINGS FOR MORE INFORMATION.

7. REFER TO CIVIL DRAWINGS FOR PROXIMITY OF STORM VAULT TO PROPERTY LINES. WHERE REQUIRED, CONTRACTOR SHALL OBTAIN PERMISSION TO EXTEND THE EXCAVATION ACROSS THE PROPERTY LINE INTO THE ADJACENT RIGHT-OF-WAY OR PROVIDE SHORING (BY OTHERS).

LEGEND:

⊗	INDICATES MANHOLE ACCESS PER PLAN NOTE #5
	INDICATES FULL HEIGHT CONCRETE WALL
X/CSX	INDICATES SECTION CUT - SEE REFERENCED DETAIL
X.X'	INDICATES TOP OF SLAB OR PLANK ELEVATION

BAR LEGEND:

(8) 5 T 15

- QUANTITY (WHERE SPECIFIED)
- BAR SIZE
- "T" TOP, "M" MIDDLE, or "B" BOTTOM
- @ SPACING oc (EQ. SPACE IF NOT SPECIFIED) BAR SPACING IN INCHES

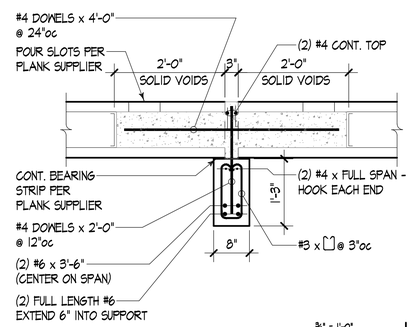

3/4" = 1'-0"

Plank Lid to Concrete Beam

VISSER ENGINEERING
33801 1st WAY SOUTH
SUITE 251
FEDERAL WAY, WA. 98003
VOICE: (253) 835-0810
FAX: (253) 835-0813

ELECTRONICALLY SIGNED 10/06/23

NO.	DATE	REVISION	
	10/06/23	RELEASED FOR PERMIT SUBMITTAL	

CIVIL BACKGROUNDS DATED: 08-25-23

CIVIL ENGINEER:
BARGHAUSEN CONSULTING ENGINEERS, INC.
18215 72nd AVENUE SOUTH
KENT, WA 98032

PRCNC20240013

PROJECT:
ARCO ampm PUYALLUP
STORMWATER DETENTION VAULT
1402 SOUTH MERIDIAN AVE.
PUYALLUP, WA

SHEET TITLE
VAULT LID PLAN

23-045
VEC PROJECT NO.:
ADD
DRAWN:
ADD
DESIGNED:
MDV
CHECKED:
10-06-23
ISSUE DATE:

SHEET NUMBER:
CS2.2

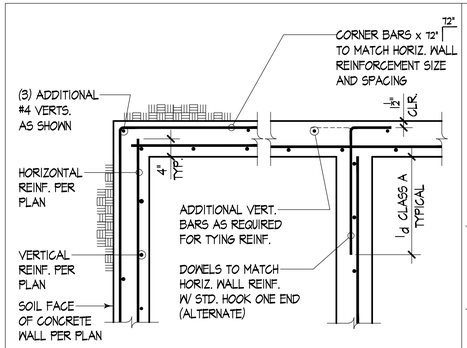

PLAN

Typical Corner Reinforcement 1 — ¾" = 1'-0"

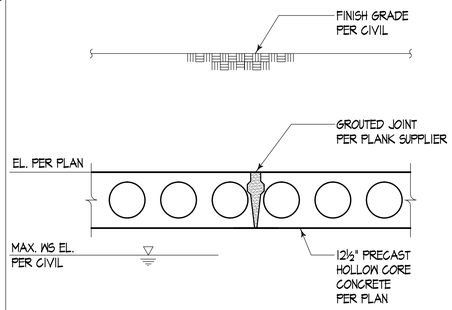

Typical Plank to Plank Joint 2 — ¾" = 1'-0"

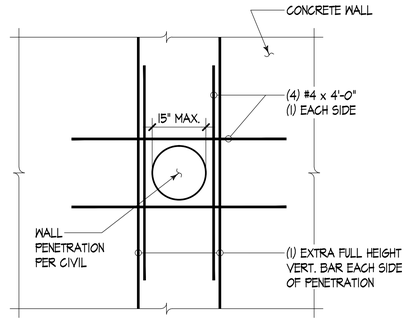

ELEVATION

Reinforcement Around Wall Openings 3 — ¾" = 1'-0"

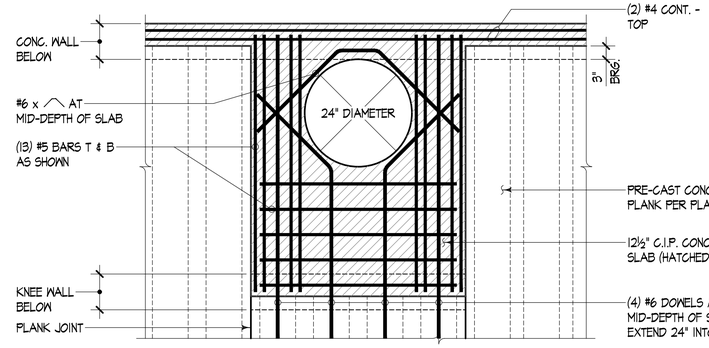

PLAN

CIP Slab at 24"Φ Manhole Access 5 — ¾" = 1'-0"

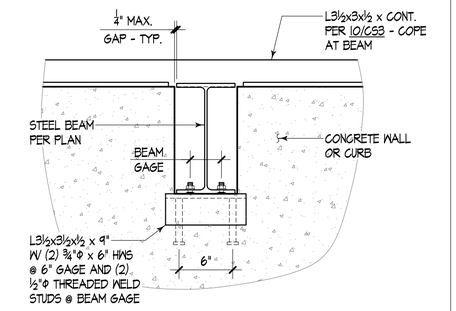

ELEVATION

Steel Beam to Concrete Wall 6 — 1½" = 1'-0"

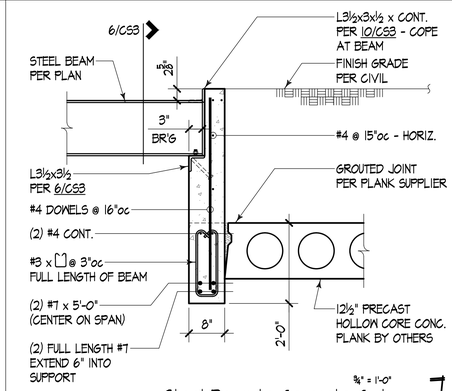

Steel Beam to Concrete Curb 7 — ¾" = 1'-0"

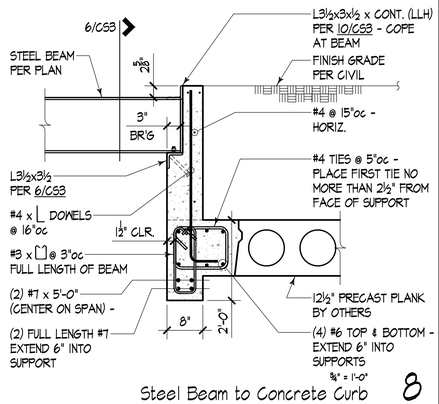

Steel Beam to Concrete Curb 8 — ¾" = 1'-0"

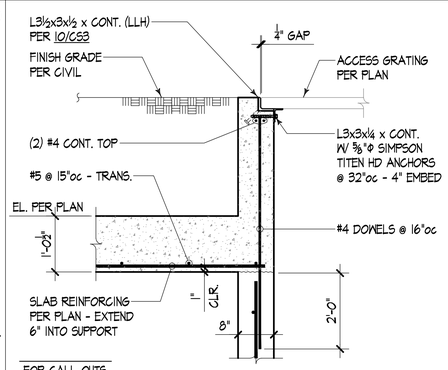

FOR CALL-OUTS IN COMMON SEE DETAIL 17/CS3

Access Grate at Curb 9 — ¾" = 1'-0"

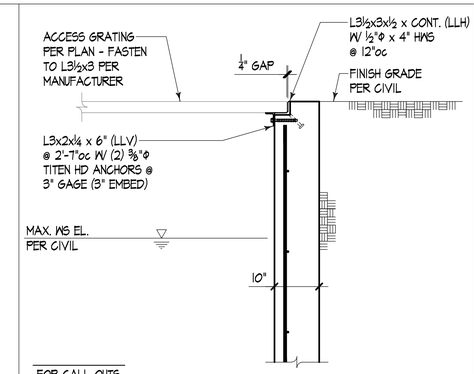

FOR CALL-OUTS IN COMMON SEE DETAIL 20/CS3

Access Grating to Exterior Wall 10 — ¾" = 1'-0"

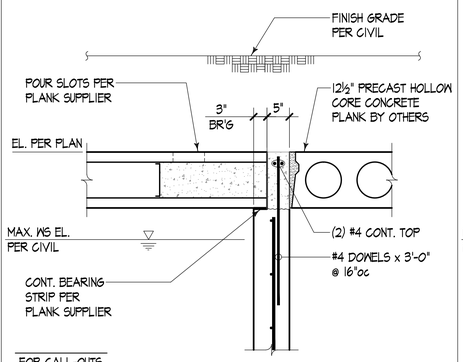

FOR CALL-OUTS IN COMMON SEE DETAIL 17/CS3

Plank Transition at Bearing Wall 11 — 1½" = 1'-0"

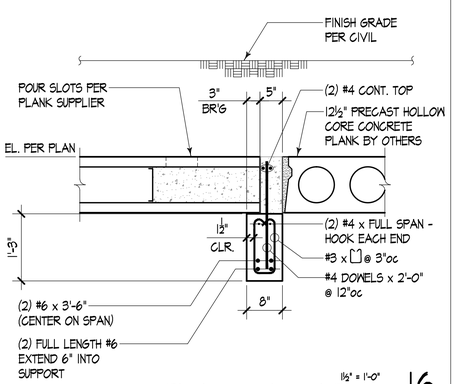

Plank Transition at Beam 16 — 1½" = 1'-0"

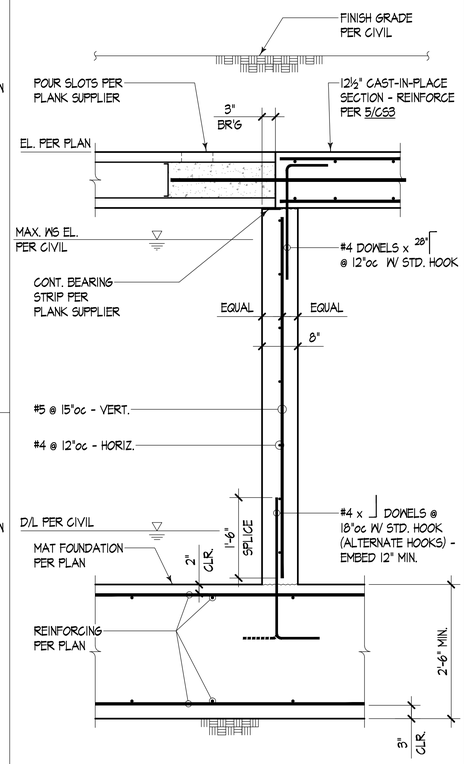

Typical Knee Wall at Manhole 17 — ¾" = 1'-0"

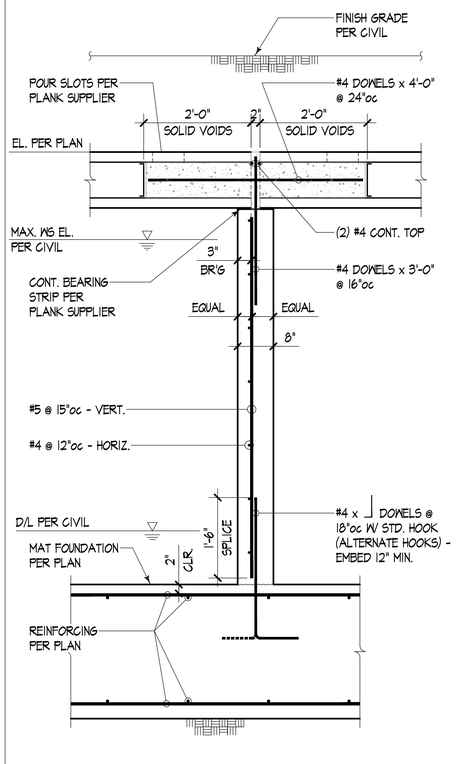

Typical Interior Bearing Wall 18 — ¾" = 1'-0"

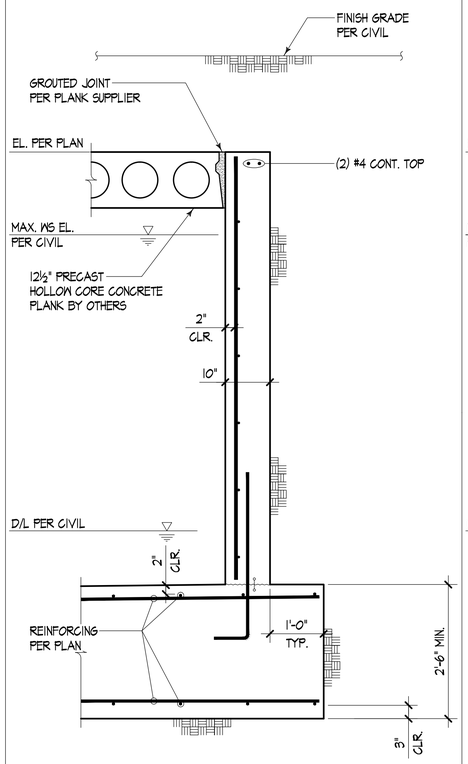

FOR CALL-OUTS IN COMMON SEE DETAIL 20/CS3

Typical End Wall 19 — ¾" = 1'-0"

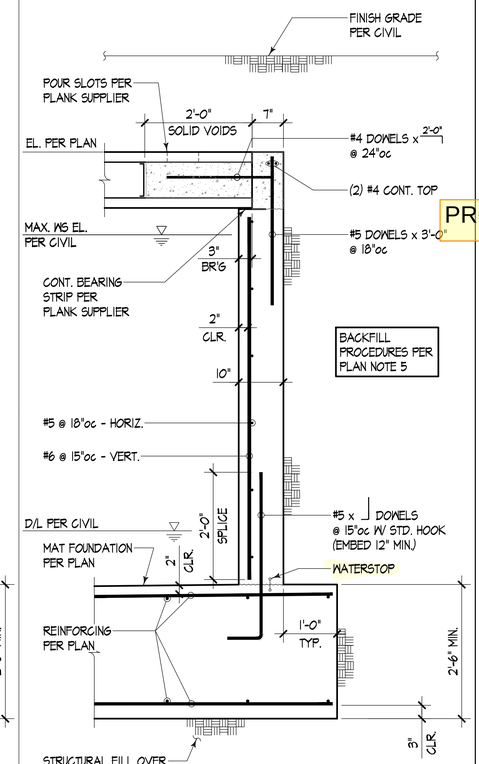

Typical Side Wall 20 — ¾" = 1'-0"

VISSER ENGINEERING
33801 1st WAY SOUTH
SUITE 251
FEDERAL WAY, WA. 98003
VOICE: (253) 835-0810
FAX: (253) 835-0813

ELECTRONICALLY SIGNED 10/06/23

NO.	DATE	REVISION
	10/06/23	RELEASED FOR PERMIT SUBMITTAL

CIVIL BACKGROUNDS DATED: 08-25-23

CIVIL ENGINEER:
BARGHAUSEN CONSULTING ENGINEERS, INC.
18215 72nd AVENUE SOUTH
KENT, WA 98032

PRCNC20240013

PROJECT:
ARCO amom PUYALLUP
STORMWATER DETENTION VAULT
1402 SOUTH MERIDIAN AVE.
PUYALLUP, WA

SHEET TITLE
STRUCTURAL DETAILS

23-045
VEC PROJECT NO.:
ADD
DRAWN:
ADD
DESIGNED:
MDV
CHECKED:
10-06-23
ISSUE DATE:

SHEET NUMBER:
CS3

SITE PLAN

FOR

ARCO ampm PUYALLUP

SEC. 33, TWN. 20 N, RGE. 4 E, W.M.

CITY OF PUYALLUP, PIERCE COUNTY

CONSTRUCTION NOTES:

1. PROPOSED CONVENIENCE STORE. CONFIRM ALL DIMENSIONS WITH ARCHITECTURAL PLANS. SEE ARCHITECTURAL PLANS FOR DETAILS.
2. PROPOSED CAR WASH. CONFIRM ALL DIMENSIONS WITH ARCHITECTURAL PLANS. SEE ARCHITECTURAL PLANS FOR DETAILS.
3. PROPOSED LOCATION OF FUEL CANOPY. CONFIRM ALL DIMENSIONS WITH THE ARCHITECTURAL AND FUEL PLANS. SEE ARCHITECTURAL PLANS AND FUEL PLANS FOR DETAILS.
4. PROPOSED 25K AND 22K SPLIT UNDERGROUND STORAGE TANKS. SEE FUEL PLANS FOR DETAILS.
5. PROPOSED TRASH ENCLOSURE AND CONCRETE TRASH ENCLOSURE SLAB. SEE ARCHITECTURAL PLANS FOR DETAILS.
6. PROPOSED ON-SITE ASPHALT PAVEMENT. REFER TO SEPARATE CIVIL CONSTRUCTION PERMIT PRCCP20231423.
7. PROPOSED ON-SITE CONCRETE PAVEMENT. REFER TO SEPARATE CIVIL CONSTRUCTION PERMIT PRCCP20231423.
8. PROPOSED BARRIER CURB. REFER TO SEPARATE CIVIL CONSTRUCTION PERMIT PRCCP20231423.
9. PROPOSED CURB AND GUTTER. REFER TO SEPARATE CIVIL CONSTRUCTION PERMIT PRCCP20231423.
10. PROPOSED CONCRETE SIDEWALK, WIDTH VARIES. REFER TO SEPARATE CIVIL CONSTRUCTION PERMIT PRCCP20231423.
11. PROPOSED ACCESSIBLE PARKING STALL AND AISLE. REFER TO SEPARATE CIVIL CONSTRUCTION PERMIT PRCCP20231423.
12. PROPOSED BOLLARD MOUNTED ACCESSIBLE PARKING STALL SIGNAGE. REFER TO SEPARATE CIVIL CONSTRUCTION PERMIT PRCCP20231423.
13. PROPOSED PARKING STALL WITH 4" WIDE WHITE REFLECTIVE PAINT STRIPE (TYP.). REFER TO SEPARATE CIVIL CONSTRUCTION PERMIT PRCCP20231423.
14. PROPOSED BOLLARD (TYP.). REFER TO SEPARATE CIVIL CONSTRUCTION PERMIT PRCCP20231423.
15. PROPOSED LOT LIGHT. SEE DETAIL ON-SITE PHOTOMETRIC PLANS FOR MORE DETAILS. COORDINATE ALL CONDUIT RUNS, WIRING REQUIREMENTS, ETC. WITH ELECTRICAL PLANS. REFER TO SEPARATE CIVIL CONSTRUCTION PERMIT PRCCP20231423.
16. PROPOSED AIR/WATER UNIT. SEE ARCHITECTURAL PLANS FOR DETAILS.
17. PROPOSED BICYCLE STORAGE. REFER TO SEPARATE CIVIL CONSTRUCTION PERMIT PRCCP20231423.
18. PROPOSED SEATING BENCH. SEE ARCHITECTURAL PLANS FOR DETAILS.
19. PROPOSED LANDSCAPING. SEE LANDSCAPE PLANS.
20. PROPOSED CONCRETE TANK FUEL SLAB. SEE FUEL PLANS FOR DESIGN.
21. PROPOSED UNDER CANOPY CONCRETE SLAB. SEE ARCHITECTURAL PLANS FOR DETAILS.
22. PROPOSED FUEL DISPENSERS WITH HOOP BOLLARDS (TYP.). SEE FUEL PLANS FOR DETAILS.
23. PAVEMENT MARKINGS - 4" WIDE WHITE PAINTED STRIPES @ 2' O.C/45' ANGLE. REFER TO SEPARATE CIVIL CONSTRUCTION PERMIT PRCCP20231423.
24. PROPOSED VACUUM UNIT. SEE ARCHITECTURAL PLANS FOR DETAILS.
25. PROPOSED FUTURE VAN ACCESSIBLE AND STANDARD EV CHARGING STATION. FREEWIRE EV CHARGING STATION TO BE INSTALLED, REFER TO SEPARATE CIVIL CONSTRUCTION PERMIT PRCCP20231423.
26. PROPOSED TRASH RECEPTACLE (TYP).
27. PROPOSED ACCESSIBLE PATH. REFER TO ACCESSIBLE PATH NOTE THIS SHEET.
28. PROPOSED BLOCK RETAINING WALL. REFER TO STRUCTURAL ENGINEERING PLANS FOR DETAILS. REFER TO RETAINING WALL BUILDING PERMIT PRRWF20231581.
29. PROPOSED ON-SITE MONUMENT SIGN. REFER TO SEPARATE SIGNAGE PLANS.
30. PROPOSED SITE FENCE. REFER TO ARCHITECTURAL PLANS FOR MORE DETAILS.
31. PROPOSED DIRECTIONAL ARROWS. REFER TO SEPARATE CIVIL CONSTRUCTION PERMIT PRCCP20231423.
32. PROPOSED BUS STOP BENCH PER PIERCE TRANSIT STANDARD BENCH. REFER TO SEPARATE CIVIL CONSTRUCTION PERMIT PRCCP20231423. CONTRACTOR TO GIVE PIERCE TRANSIT TWO (2) WEEKS NOTICE PRIOR TO CONSTRUCTION TO ALLOW PIERCE TRANSIT TO REMOVE THE BUS STOP SIGN AND BENCH. UPON COMPLETION OF CONSTRUCTION CONTRACTOR TO COORDINATE REINSTALLATION OF BUS STOP WITH PIERCE TRANSIT.
33. EXISTING FIRE HYDRANT TO REMAIN.
34. EXISTING ASPHALT TO REMAIN.
35. EXISTING DIRECTIONAL HOSPITAL ROAD SIGN TO BE RE-SET. FINAL LOCATION TO BE APPROVED WITH ROW INSPECTOR. THE PERMIT HOLDER SHALL NOTIFY MULTICARE GOOD SAMARITAN HOSPITAL BY CONTACTING AARON PICHE, MANAGER OF ENGINEERING SERVICES, AT AARON.PICHE@MULTICARE.ORG AND HEIDI ROCK AT HEIDI.ROCK@MULTICARE.ORG WITH THE PROPOSED IMPACTS AND SIGN DISPLACEMENT DURATION AT LEAST 48 HOURS IN ADVANCE OF JOB START. NO EMERGENCY SERVICE VEHICLE TRAVEL ROUTES SHALL BE BLOCKED OR REROUTED.
36. EXISTING CURB TO REMAIN.
37. RESTORE GRAVEL SURFACE.
38. PROPOSED TRANSFORMER.
39. PROPOSED MOUNTABLE CURB ISLAND. REFER TO SEPARATE CIVIL CONSTRUCTION PERMIT PRCCP20231423.
40. PROPOSED 12"X18" "NO PARKING FIRE LANE" SIGN (TYP. OF 8).
41. PROPOSED "DO NOT ENTER" SIGN.
42. PROPOSED "RIGHT TURN ONLY" SIGN.
43. PROPOSED CONCRETE SWALE. REFER TO SEPARATE CIVIL CONSTRUCTION PERMIT PRCCP20231423.
44. PROPOSED FIRE HYDRANT. REFER TO SEPARATE CIVIL CONSTRUCTION PERMIT PRCCP20231423.
45. PROPOSED STORMWATER DETENTION VAULT AND OIL/WATER SEPARATOR. REFER TO SEPARATE CIVIL CONSTRUCTION PERMIT PRCCP20231423.
46. PROPOSED TRASH ENCLOSURE ROOF DOWNSPOUT. REFER TO SEPARATE CIVIL CONSTRUCTION PERMIT PRCCP20231423.
47. PROPOSED CAR WASH RECLAIM TANKS AND OIL/WATER SEPARATOR. REFER TO SEPARATE CIVIL CONSTRUCTION PERMIT PRCCP20231423.
48. PROPOSED UNDER CANOPY OIL/WATER SEPARATOR. SEE SEPARATE CIVIL CONSTRUCTION PERMIT PRCCP20231423.
49. PROPOSED C-STORE GREASE INTERCEPTOR. REFER TO SEPARATE CIVIL CONSTRUCTION PERMIT PRCCP20231423.
50. PROPOSED SU-30 SINGLE UNIT TRUCK PATH. REFER TO CROSS SECTION OF VEHICLE ON THIS SHEET.

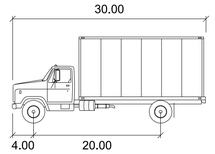

SU-30

	feet
Width	: 8.00
Track	: 8.00
Lock to Lock Time	: 6.0
Steering Angle	: 31.8

N

0 10' 20' 40'

SCALE: 1"=20'

ACCESSIBLE PATH OF TRAVEL NOTE:

WALKWAYS ALONG ACCESSIBLE ROUTES OF TRAVEL SHALL BE CONTINUOUSLY ACCESSIBLE, BE A MINIMUM OF 48" IN WIDTH (PER PAR REQUIREMENTS FOUND IN PROWAG), HAVE A MAXIMUM 2.0% CROSS SLOPE, AND SHALL HAVE RAMPS COMPLYING WITH ACCESSIBILITY STANDARDS (SECTION 405) WHERE NECESSARY TO CHANGE ELEVATION AT A LONGITUDINAL SLOPE EXCEEDING 5% (1:20).

1. MEASUREMENT FROM NORTHWEST PROPERTY CORNER TO FINISH FACE OF BUILDING FOUNDATION (NOT FOOTING). C-STORE IS NOT PARALLEL TO NORTHWEST PROPERTY LINE. DIMENSIONS FROM NORTHWEST PROPERTY CORNER ARE ONLY ACCURATE TO BUILDING CORNERS AS SHOWN.
2. MEASUREMENT FROM NORTHWEST PROPERTY CORNER TO CENTER OF CANOPY COLUMNS. CANOPY IS NOT PARALLEL TO WEST PROPERTY LINE. DIMENSIONS FROM NORTHWEST PROPERTY CORNER ARE ONLY ACCURATE TO CENTER OF CANOPY COLUMNS AS SHOWN.
3. MEASUREMENT FROM SOUTHWEST PROPERTY CORNER TO FINISH FACE OF BUILDING FOUNDATION (NOT FOOTING). CAR WASH IS NOT PARALLEL TO SOUTH PROPERTY LINE. DIMENSIONS FROM SOUTHWEST PROPERTY CORNER ARE ONLY ACCURATE TO CAR WASH AS SHOWN.

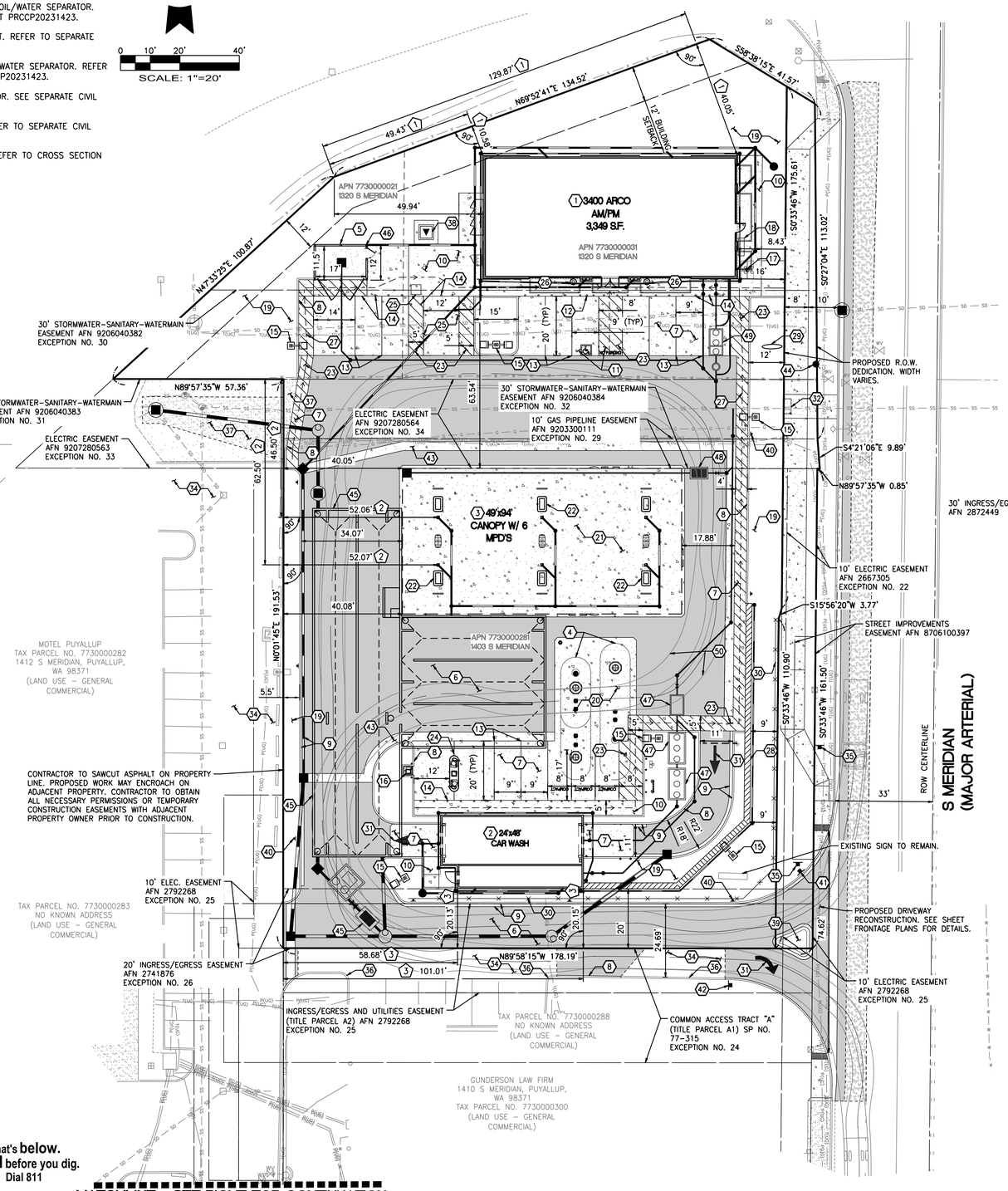

MATCHLINE - SEE RIGHT FOR CONTINUATION

MATCHLINE - SEE LEFT FOR CONTINUATION

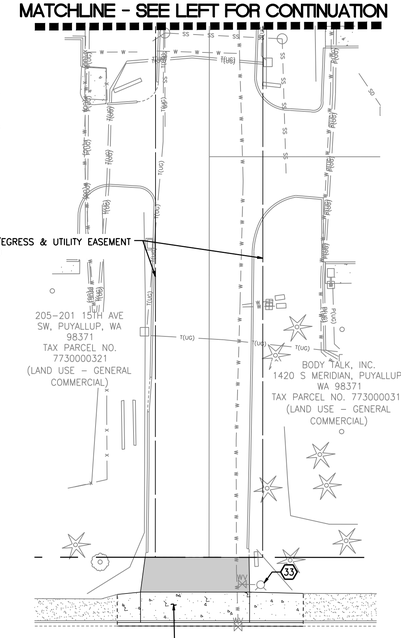

UTILITY CONFLICT NOTE:

THE CONTRACTOR SHALL BE RESPONSIBLE FOR VERIFYING THE LOCATION, DIMENSION, AND DEPTH OF ALL EXISTING UTILITIES WHETHER SHOWN ON THESE PLANS OR NOT BY POTHOLING THE UTILITIES AND SURVEYING THE HORIZONTAL AND VERTICAL LOCATION PRIOR TO CONSTRUCTION. THIS SHALL INCLUDE CALLING UTILITY LOCATE AT 811 48 HOURS IN ADVANCE AND THEN POTHOLING ALL OF THE EXISTING UTILITIES AT LOCATIONS OF NEW UTILITY CROSSINGS TO PHYSICALLY VERIFY WHETHER OR NOT CONFLICTS EXIST. LOCATIONS OF SAID UTILITIES AS SHOWN ON THESE PLANS ARE BASED UPON THE UNVERIFIED PUBLIC INFORMATION AND ARE SUBJECT TO VARIATION. IF CONFLICTS SHOULD OCCUR, THE CONTRACTOR SHALL NOTIFY BARGHAUSEN CONSULTING ENGINEERS, INC. TO RESOLVE ALL PROBLEMS PRIOR TO PROCEEDING WITH CONSTRUCTION.

811 Know what's **below.** **Call** before you dig. Dial 811

CLIENT: bp

ARCO

BP WEST COAST PRODUCTS, LLC

Barghausen Consulting Engineers, Inc.

18215 72nd Avenue South
Kent, WA 98032
425.251.6222
barghausen.com

NO.	DATE	REVISION DESCRIPTION
1		
2		
3		
4		
5		
6		
7		
8		
9		
10		
11		
12		

SEAL: ALEX WHITE, STATE OF WASHINGTON, 21036777, REGISTERED PROFESSIONAL ENGINEER

2/9/24

DEVELOPMENT INFORMATION:

ARCO NTI

3400 am/pm FUEL CANOPY w/ 6 MPD's

SITE ADDRESS:

1402 S. MERIDIAN

@ HIGHWAY 512
PUYALLUP, WASHINGTON

FACILITY #TBD

DESIGNED BY:	JDF	ALLIANCE ZAOM:	
CHECKED BY:	AW	BP REPM:	
DRAWN BY:	JDF	ALLIANCE PM:	
VERSION:	-	PROJECT NO:	21730

DRAWING TITLE: SITE PLAN

SHEET NO: 1 OF 1

P:\21000s\21730\engineering\21730-BUILDING.dwg 2/9/2024 2:08 PM JFLEHARTY

DRAINAGE PLAN - NORTH

FOR

ARCO ampm PUYALLUP

SEC. 33, TWN. 20 N, RGE. 4 E, W.M.

CITY OF PUYALLUP, PIERCE COUNTY

STORMWATER STRUCTURES
CB #3, TYPE 1, W/STANDARD GRATE RIM=47.06 IE=44.41 (6" NE) IE=44.41 (8" S)
FDCO #10, W/SOLID LOCKING ADA COMPLIANT LID RIM=49.59 IE=48.10 (4" N) IE=48.10 (4" E) IE=48.10 (4" S)
FDCO #11, W/SOLID LOCKING LID RIM=49.23 IE=48.10 (4" E) IE=48.10 (4" S)
FDCO #12, W/SOLID LOCKING LID RIM=49.55 IE=48.10 (4" W) IE=48.10 (4" S)
FDCO #13, W/SOLID LOCKING ADA COMPLIANT LID RIM=49.59 IE=48.10 (4" N) IE=48.10 (4" W)
SDCO #1, W/SOLID LOCKING ADA COMPLIANT LID RIM=49.54 IE=45.25 (6" N) IE=45.25 (6" E) IE=45.25 (6" SW)
SDCO #2, W/SOLID LOCKING LID RIM=48.09 IE=45.72 (6" E) IE=45.72 (6" S)
SDCO #3, W/SOLID LOCKING LID RIM=49.35 IE=46.67 (6" SE) IE=46.67 (6" SW) IE=46.67 (6" S) IE=46.67 (6" W)
SDCO #4, W/SOLID LOCKING ADA COMPLIANT LID RIM=49.50 IE=47.01 (6" SW) IE=47.01 (6" N)
SDCO #5, W/SOLID LOCKING ADA COMPLIANT LID RIM=49.56 IE=47.06 (6" NE) IE=47.06 (6" W)
SDCO #6, W/SOLID LOCKING ADA COMPLIANT LID RIM=48.45 IE=43.50 (6" E) IE=43.50 (6" N) IE=43.50 (6" S)
SDCO #7, W/SOLID LOCKING ADA COMPLIANT LID RIM=48.30 IE=43.75 (6" NW) IE=43.75 (6" S)
SDCO #8, W/SOLID LOCKING ADA COMPLIANT LID RIM=48.61 IE=43.85 (6" E) IE=43.85 (6" N) IE=43.85 (6" W)
SDCO #9, W/SOLID LOCKING ADA COMPLIANT LID RIM=48.47 IE=44.10 (6" NW) IE=44.10 (6" S)
SDCO #10, W/SOLID LOCKING ADA COMPLIANT LID RIM=48.78 IE=44.90 (6" N) IE=44.90 (6" W)
SDCO #11, W/SOLID LOCKING ADA COMPLIANT LID RIM=48.65 IE=45.15 (6" NW) IE=45.15 (6" S)
SDCO #14, W/SOLID LOCKING ADA COMPLIANT LID RIM=49.56 IE=45.39 (6" W) IE=45.39 (6" N) IE=45.39 (6" S)
SDMH #1, TYPE 2 - 48" W/SOLID LOCKING TRAFFIC RATED LID RIM=47.48 IE=39.80 (12" S) IE=39.80 (12" W)
SDMH #2, TYPE 2 - 54" W/SOLID LOCKING TRAFFIC RATED LID RIM=47.41 IE=39.90 (12" S) CONTROL STRUCTURE IE=39.90 (12" N) SEE DETAIL 2/C5.5
YARD DRAIN #1, W/BEEHIVE GRATE RIM=49.15 IE=46.76 (6" NW)

(#) - DRAINAGE NOTES:

1. DETENTION VAULT WITH 5.1' LIVE STORAGE. SEE PLAN, SHEET C5.2
   TOP OF LIVE STORAGE = 45.00
   BOTTOM OF LIVE STORAGE = 39.90
2. DETENTION VAULT ACCESS RISER WITH SOLID LOCKING LID.
3. PROPOSED YARD DRAIN PER CITY OF PUYALLUP STANDARD DETAIL 02.05.02. SEE DETAIL 2/C5.4.
4. 5'X10' DETENTION VAULT ACCESS SOLID REMOVABLE PANEL.
5. CATCH BASIN TYPE I PER CITY OF PUYALLUP STANDARD DETAIL 02.01.03. SEE DETAIL 2/C5.7.
6. CATCH BASIN TYPE II PER CITY OF PUYALLUP STANDARD DETAIL 02.01.04. SEE DETAIL 1/C5.6.
7. PROPOSED CONCRETE SWALE. SEE DETAIL 1/C5.4 AND SHEET C4.0 FOR ELEVATIONS.
8. CONTRACTOR TO PROVIDE NECESSARY FITTINGS TO FACILITATE CONNECTION TO ROOF/CANOPY DOWNSPOUTS.
9. BUILDING FOOTING DRAIN
   4" PERF SCH-40 PVC PIPE WRAPPED IN NON-WOVEN GEOTEXTILE FABRIC: MIRAFI 140N OR EQUIVALENT.
   IE = 48.10
10. CONNECT PROPOSED FOOTING DRAIN TO THE PROPOSED ON-SITE CONVEYANCE. CONTRACTOR SHALL MAKE CONNECTION DOWNSTREAM OF ALL DOWNSPOUT CONNECTION AT SUFFICIENT DISTANCE FROM BUILDING AS DETERMINED BY SITE INSPECTOR.
11. PROPOSED RETAINING WALL FOOTING DRAIN AND CLEANOUT. REFER TO SEPARATE RETAINING PERMIT FOR MORE INFORMATION

PIPE MATERIALS AND COVER:

CONTRACTOR SHALL USE PIPE/FITTING MATERIALS IN ACCORDANCE WITH CITY OF PUYALLUP REQUIREMENTS AND MANUFACTURER SPECIFICATIONS.

PVC PIPE SHALL BE SDR-35 WITH 3.0' MIN COVER WHERE SUBJECT TO VEHICULAR LOADING SHALL.

ALL DUCTILE IRON PIPE WITH 1.0' MIN COVER SHALL BE CLASS 52.

DETENTION VAULT PERMIT NOTE:

A SEPARATE BUILDING PERMIT IS REQUIRED FOR THE PROPOSED DETENTION VAULT. PLEASE REFER TO SEPARATE DETENTION VAULT PERMIT DRAWINGS FOR VAULT STRUCTURAL DESIGN.

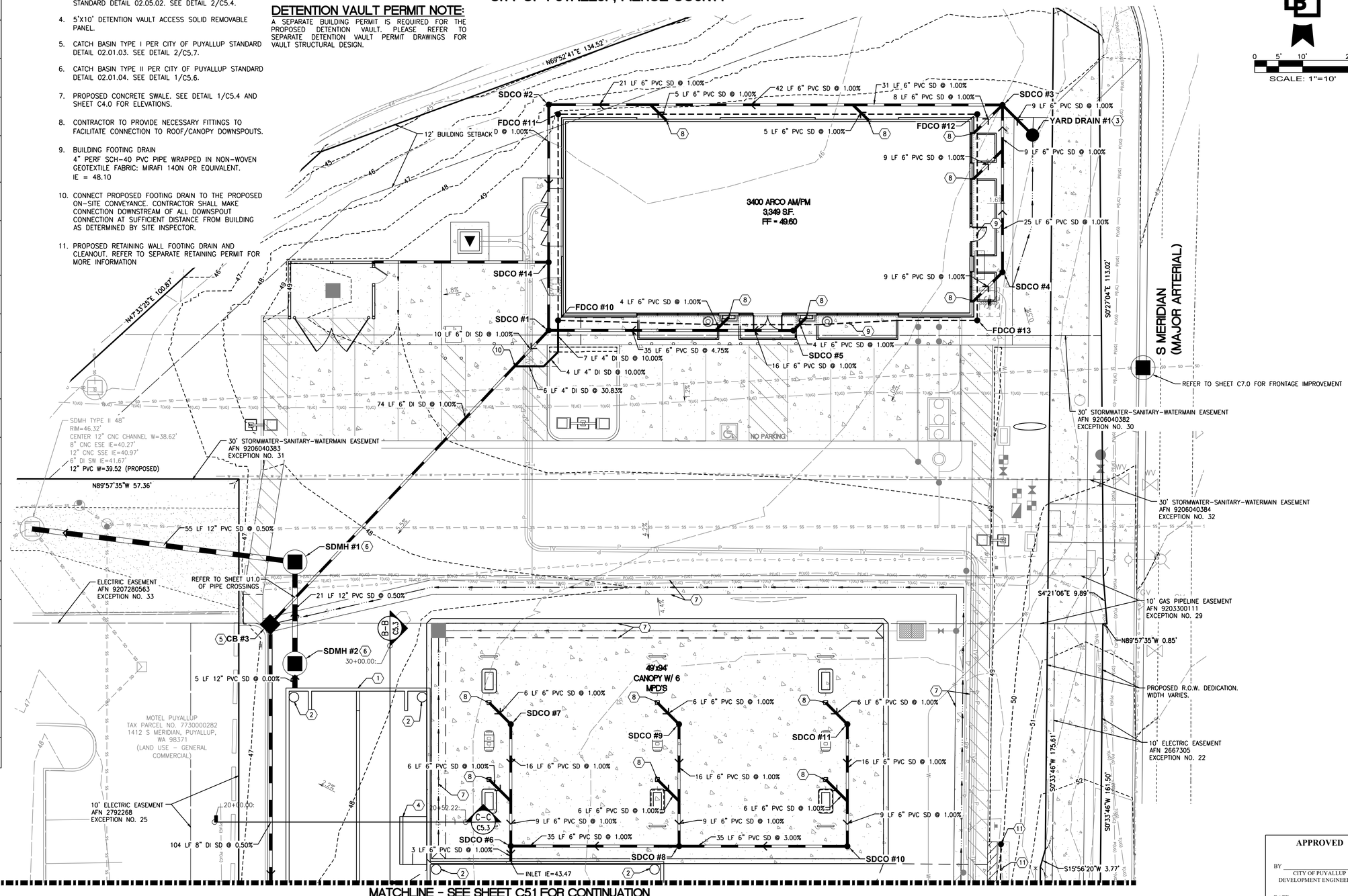

MATCHLINE - SEE SHEET C5.1 FOR CONTINUATION

UTILITY CONFLICT NOTE:

THE CONTRACTOR SHALL BE RESPONSIBLE FOR VERIFYING THE LOCATION, DIMENSION, AND DEPTH OF ALL EXISTING UTILITIES WHETHER SHOWN ON THESE PLANS OR NOT BY POTHOLING THE UTILITIES AND SURVEYING THE HORIZONTAL AND VERTICAL LOCATION PRIOR TO CONSTRUCTION. THIS SHALL INCLUDE CALLING UTILITY LOCATE AT 811 48 HOURS IN ADVANCE AND THEN POTHOLING ALL OF THE EXISTING UTILITIES AT LOCATIONS OF NEW UTILITY CROSSINGS TO PHYSICALLY VERIFY WHETHER OR NOT CONFLICTS EXIST. LOCATIONS OF SAID UTILITIES AS SHOWN ON THESE PLANS ARE BASED UPON THE UNVERIFIED PUBLIC INFORMATION AND ARE SUBJECT TO VARIATION. IF CONFLICTS SHOULD OCCUR, THE CONTRACTOR SHALL NOTIFY BARGHAUSEN CONSULTING ENGINEERS, INC. TO RESOLVE ALL PROBLEMS PRIOR TO PROCEEDING WITH CONSTRUCTION.

811 Know what's **below.** **Call** before you dig. Dial 811

UTILITY PROTECTION NOTE:

APPROXIMATE LOCATION OF EXISTING UTILITIES ARE SHOWN ON THESE PLANS. CONTRACTOR TO COORDINATE WITH PURVEYOR AND USE EXTREME CAUTION WHEN EXCAVATING ON-SITE, UNTIL EXISTING GAS AND POWER SERVICE LOCATIONS ARE CONFIRMED. CONTRACTOR TO ORDER INDEPENDENT UTILITY LOCATES (INCLUDING GAS AND POWER) FOR THE FULL SCOPE OF WORK PRIOR TO CONSTRUCTION OR ANY GROUND DISTURBING ACTIVITIES.

APPROVED

BY _____
CITY OF PUYALLUP
DEVELOPMENT ENGINEERING

DATE _____

NOTE: THIS APPROVAL IS VOID AFTER 180 DAYS FROM APPROVAL DATE.
THE CITY WILL NOT BE RESPONSIBLE FOR ERRORS AND/OR OMISSIONS ON THESE PLANS.
FIELD CONDITIONS MAY DICTATE CHANGES TO THESE PLANS AS DETERMINED BY THE DEVELOPMENT ENGINEERING MANAGER.

CLIENT: bp

ARCO
BP WEST COAST PRODUCTS, LLC

Barghausen Consulting Engineers, Inc.
18215 72nd Avenue South
Kent, WA 98032
425.251.6222
barghausen.com

NO.	DATE	REVISION DESCRIPTION
1		
2		
3		
4		
5		
6		
7		
8		
9		
10		
11		
12		

SEAL: ALEX WHITE, STATE OF WASHINGTON, 21086777, REGISTERED PROFESSIONAL ENGINEER
2/9/24

DEVELOPMENT INFORMATION:
ARCO NTI
3400 am/pm
FUEL CANOPY w/ 6 MPD's

SITE ADDRESS:
1402 S. MERIDIAN
@ HIGHWAY 512
PUYALLUP, WASHINGTON

FACILITY #TBD

DESIGNED BY: JDF	ALLIANCE Z&CM:
CHECKED BY: AW	BP REPM:
DRAWN BY: JDF	ALLIANCE PM:
VERSION: -	PROJECT NO: 21730

DRAWING TITLE: **DRAINAGE PLAN - NORTH**

SHEET NO: **C5.0**

P:\21000s\21730\engineering\21730-M.dwg 2/9/2024 4:33 PM JFLEHARTY

DRAINAGE PLAN - SOUTH

FOR

ARCO ampm PUYALLUP

SEC. 33, TWN. 20 N, RGE. 4 E, W.M.
CITY OF PUYALLUP, PIERCE COUNTY

DETENTION VAULT PERMIT NOTE:

A SEPARATE BUILDING PERMIT IS REQUIRED FOR THE PROPOSED DETENTION VAULT. PLEASE REFER TO SEPARATE DETENTION VAULT PERMIT DRAWINGS FOR VAULT STRUCTURAL DESIGN.

PIPE MATERIALS AND COVER:

CONTRACTOR SHALL USE PIPE/FITTING MATERIALS IN ACCORDANCE WITH CITY OF PUYALLUP REQUIREMENTS AND MANUFACTURER SPECIFICATIONS.

PVC PIPE SHALL BE SDR-35 WITH 3.0' MIN COVER WHERE SUBJECT TO VEHICULAR LOADING SHALL.

ALL DUCTILE IRON PIPE WITH 1.0' MIN COVER SHALL BE CLASS 52.

MATCHLINE - SEE SHEET C5.0 FOR CONTINUATION

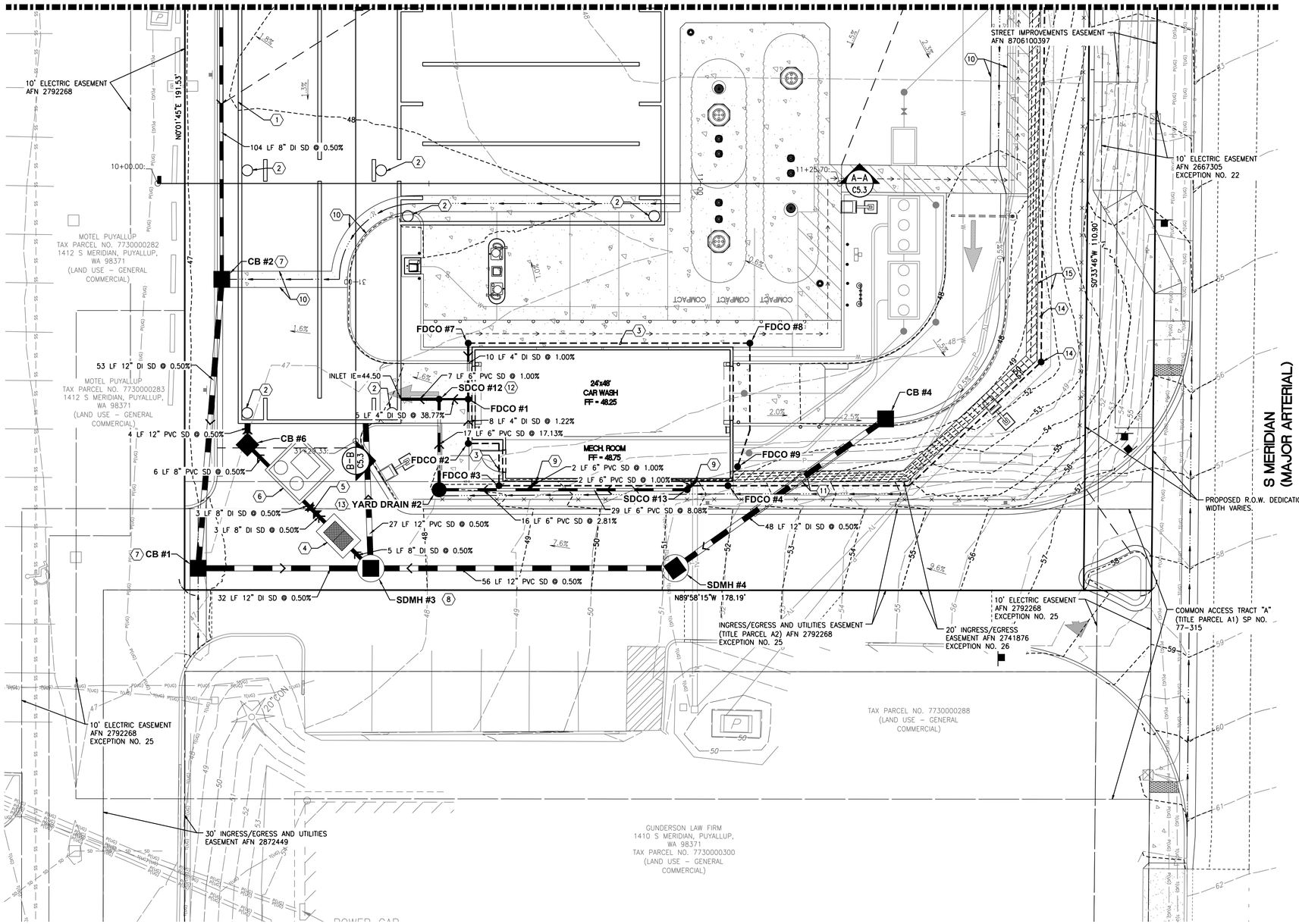

(#) - DRAINAGE NOTES:

1. DETENTION VAULT WITH 5.1' LIVE STORAGE. SEE PLAN, SHEET C5.2
   TOP OF LIVE STORAGE = 45.00
   BOTTOM OF LIVE STORAGE = 39.90
2. DETENTION VAULT ACCESS RISER WITH SOLID LOCKING LID.
3. BUILDING FOOTING DRAIN
   4" PERF SCH-40 PVC PIPE WRAPPED IN NON-WOVEN GEOTEXTILE FABRIC: MIRAFI 140N OR EQUIVALENT.
   IE = 46.75.
4. PROPOSED OIL/WATER SEPARATOR
   (OLDCASTLE PRECAST 577-CPS OR APPROVED EQUAL)
   SEE DETAIL 1/C5.7
   RIM: 47.53
   IE: 44.48 (IN 8" SE)
   IE: 45.00 (OUT 8" NW)
5. 8" EMERGENCY SHUT OFF VALVE W/ RISER & VALVE BOX. VALVE SHALL BE INSTALLED IN TRAFFIC RATED BOX.
6. CONTECH MODULAR WETLAND: MWS-L-8-8-V
   SEE DETAIL 2/C5.6
   RIM: 47.57
   IE: 44.97 (IN 8" SE)
   IE: 43.20 (OUT 8" NW)
7. CATCH BASIN TYPE I PER CITY OF PUYALLUP STANDARD DETAIL 02.01.03. SEE DETAIL 2/C5.7.
8. CATCH BASIN TYPE II PER CITY OF PUYALLUP STANDARD DETAIL 02.01.04. SEE DETAIL 1/C5.6.
9. CONTRACTOR TO PROVIDE NECESSARY FITTINGS TO FACILITATE CONNECTION TO ROOF/CANOPY DOWNSPOUTS.
10. PROPOSED CONCRETE SWALE. SEE DETAIL 1/C5.4 AND SHEET C4.1 FOR ELEVATIONS.
11. PROPOSED PIPE CASING, SEE WALL DETAIL 2/C4.2. CONTRACTOR TO ENSURE 0.5' SEPARATION BETWEEN TOP OF PIPE AND BOTTOM OF WALL FOOTING FOR 10' ON EITHER SIDE OF INTERSECTION.
12. CONNECT PROPOSED FOOTING DRAIN TO THE PROPOSED ON-SITE CONVEYANCE. CONTRACTOR SHALL MAKE CONNECTION DOWNSTREAM OF ALL DOWNSPOUT CONNECTION AT SUFFICIENT DISTANCE FROM BUILDING AS DETERMINED BY SITE INSPECTOR.
13. PROPOSED YARD DRAIN PER CITY OF PUYALLUP STANDARD DETAIL 02.05.02. SEE DETAIL 2/C5.4.
14. PROPOSED RETAINING WALL FOOTING DRAIN AND CLEANOUT. REFER TO SEPARATE RETAINING PERMIT FOR MORE INFORMATION.
15. FREE-DRAINING WALL BACKFILL PER THE STRUCTURAL PLANS. REFER TO RETAINING WALL PERMIT FOR MORE INFORMATION.

N

0 5' 10' 20'
SCALE: 1"=10'

STORMWATER STRUCTURES
CB #1, TYPE 1, W/STANDARD GRATE RIM=46.83 IE=43.62 (12" N) IE=43.62 (12" E)
CB #2, TYPE 1, W/STANDARD GRATE RIM=47.38 IE=43.89 (8" N) IE=43.89 (12" S)
CB #4, TYPE 1, W/STANDARD GRATE RIM=47.62 IE=43.64 (12" SW)
CB #6, TYPE 1, W/SOLID LOCKING LID RIM=47.58 IE=43.17 (8" SE) IE=43.17 (12" N)
FDCO #1, W/SOLID LOCKING LID RIM=48.24 IE=46.65 (4" S) IE=46.65 (4" N) IE=46.65 (4" W)
FDCO #2, W/SOLID LOCKING LID RIM=48.53 IE=46.75 (4" E) IE=46.75 (4" N)
FDCO #3, W/SOLID LOCKING LID RIM=49.24 IE=46.75 (4" E) IE=46.75 (4" N)
FDCO #4, W/SOLID LOCKING LID RIM=52.39 IE=46.75 (4" E) IE=46.75 (4" W)
FDCO #7, W/SOLID LOCKING LID RIM=48.24 IE=46.75 (4" E) IE=46.75 (4" S)

STORMWATER STRUCTURES
FDCO #8, W/SOLID LOCKING LID RIM=48.24 IE=46.75 (4" S) IE=46.75 (4" W)
FDCO #9, W/SOLID LOCKING LID RIM=48.75 IE=46.75 (4" N)
SDCO #12, W/SOLID LOCKING TRAFFIC RATED LID RIM=48.15 IE=44.57 (6" S) IE=44.57 (4" E) IE=44.57 (6" W)
SDCO #13, W/SOLID LOCKING LID RIM=51.76 IE=50.26 (6" NE) IE=50.26 (6" W)
SDMH #3, TYPE 2 - 54" W/SOLID LOCKING TRAFFIC RATED LID RIM=47.63 IE=43.46 (12" W) IE=43.12 (12" E) IE=44.50 (8" NW) IE=44.00 (12" N)
SDMH #4, TYPE 2 - 48" W/SOLID LOCKING TRAFFIC RATED LID RIM=51.19 IE=43.40 (12" NE) IE=43.40 (12" W) FLOW SPLITTER AND SPILL CONTROL DEVICE. SEE DETAIL 3/C5.4
YARD DRAIN #2, W/BEEHIVE GRATE RIM=48.93 IE=47.43 (6" E) IE=47.43 (6" N)

UTILITY CONFLICT NOTE:

THE CONTRACTOR SHALL BE RESPONSIBLE FOR VERIFYING THE LOCATION, DIMENSION, AND DEPTH OF ALL EXISTING UTILITIES WHETHER SHOWN ON THESE PLANS OR NOT BY POTHOLING THE UTILITIES AND SURVEYING THE HORIZONTAL AND VERTICAL LOCATION PRIOR TO CONSTRUCTION. THIS SHALL INCLUDE CALLING UTILITY LOCATE AT 811 48 HOURS IN ADVANCE AND THEN POTHOLING ALL OF THE EXISTING UTILITIES AT LOCATIONS OF NEW UTILITY CROSSINGS TO PHYSICALLY VERIFY WHETHER OR NOT CONFLICTS EXIST. LOCATIONS OF SAID UTILITIES AS SHOWN ON THESE PLANS ARE BASED UPON THE UNVERIFIED PUBLIC INFORMATION AND ARE SUBJECT TO VARIATION. IF CONFLICTS SHOULD OCCUR, THE CONTRACTOR SHALL NOTIFY BARGHAUSEN CONSULTING ENGINEERS, INC. TO RESOLVE ALL PROBLEMS PRIOR TO PROCEEDING WITH CONSTRUCTION.

811 Know what's **below.** **Call** before you dig. Dial 811

UTILITY PROTECTION NOTE:

APPROXIMATE LOCATION OF EXISTING UTILITIES ARE SHOWN ON THESE PLANS. CONTRACTOR TO COORDINATE WITH PURVEYOR AND USE EXTREME CAUTION WHEN EXCAVATING ON-SITE, UNTIL EXISTING GAS AND POWER SERVICE LOCATIONS ARE CONFIRMED. CONTRACTOR TO ORDER INDEPENDENT UTILITY LOCATES (INCLUDING GAS AND POWER) FOR THE FULL SCOPE OF WORK PRIOR TO CONSTRUCTION OR ANY GROUND DISTURBING ACTIVITIES.

APPROVED

BY _____
CITY OF PUYALLUP
DEVELOPMENT ENGINEERING

DATE _____

NOTE: THIS APPROVAL IS VOID AFTER 180 DAYS FROM APPROVAL DATE.
THE CITY WILL NOT BE RESPONSIBLE FOR ERRORS AND/OR OMISSIONS ON THESE PLANS.
FIELD CONDITIONS MAY DICTATE CHANGES TO THESE PLANS AS DETERMINED BY THE DEVELOPMENT ENGINEERING MANAGER.

CLIENT: bp

ARCO
BP WEST COAST PRODUCTS, LLC

Barghausen Consulting Engineers, Inc.
18215 72nd Avenue South
Kent, WA 98032
425.251.6222
barghausen.com

NO.	DATE	REVISION DESCRIPTION
1		
2		
3		
4		
5		
6		
7		
8		
9		
10		
11		
12		

SEAL: ALEX WHITE, STATE OF WASHINGTON, 21036777, REGISTERED PROFESSIONAL ENGINEER
2/9/24

DEVELOPMENT INFORMATION:
ARCO NTI
3400 am/pm FUEL CANOPY w/ 6 MPD's

SITE ADDRESS:
1402 S. MERIDIAN
@ HIGHWAY 512
PUYALLUP, WASHINGTON

FACILITY #TBD

DESIGNED BY:	JDF	ALLIANCE Z&DM:	
CHECKED BY:	AW	BP REPM:	
DRAWN BY:	JDF	ALLIANCE PM:	
VERSION:	- -	PROJECT NO:	21730

DRAWING TITLE: **DRAINAGE PLAN - SOUTH**

SHEET NO: **C5.1**

P:\210008\21730\engineering\21730-M.dwg 2/8/2024 4:33 PM JFLEHARTY

DETENTION VAULT PLAN

FOR

ARCO ampm PUYALLUP

SEC. 33, TWN. 20 N, RGE. 4 E, W.M.

CITY OF PUYALLUP, PIERCE COUNTY

VAULT AREA:

CELL AREAS:
- (3) 665.51 SF
- (2) 1,618.66

TOTAL AREA = 5,236.85 SF

CONCRETE NOTE:

THE FOLLOWING NOTES HAVE BEEN REFERENCED FROM THE VAULT STRUCTURE PLANS PREPARED BY VISSER ENGINEERING. REFER TO THE COMPLETE STRUCTURAL PLANS FOR ALL CONCRETE SPECIFICATIONS.

CONCRETE SHALL BE MIXED, PROPORTIONED, CONVEYED AND PLACED IN ACCORDANCE WITH IBC SECTION 1905 AND ACI 301. STRENGTHS AT 28 DAYS AND MIX CRITERIA SHALL BE AS FOLLOWS.

TYPE OF CONCRETE CONSTRUCTION	MIN. COMPRESSIVE STRENGTH, f'c AT 28 DAYS	MAX. W/C RATION	MIN. CEMENT CONTENT PER CUBIC YARD
SLAB ON GRADE	3000 PSI	0.63	5.5 SACKS
CONCRETE WALLS, COLUMNS & CIP LID	4500 PSI	0.48	6.5 SACKS
CURBS AT 5'X10' ACCESS GRATES	4500 PSI	0.48	6.5 SACKS

DETENTION VAULT PERMIT NOTE:

A SEPARATE BUILDING PERMIT IS REQUIRED FOR THE PROPOSED DETENTION VAULT. PLEASE REFER TO SEPARATE DETENTION VAULT PERMIT DRAWINGS FOR VAULT STRUCTURAL DESIGN.

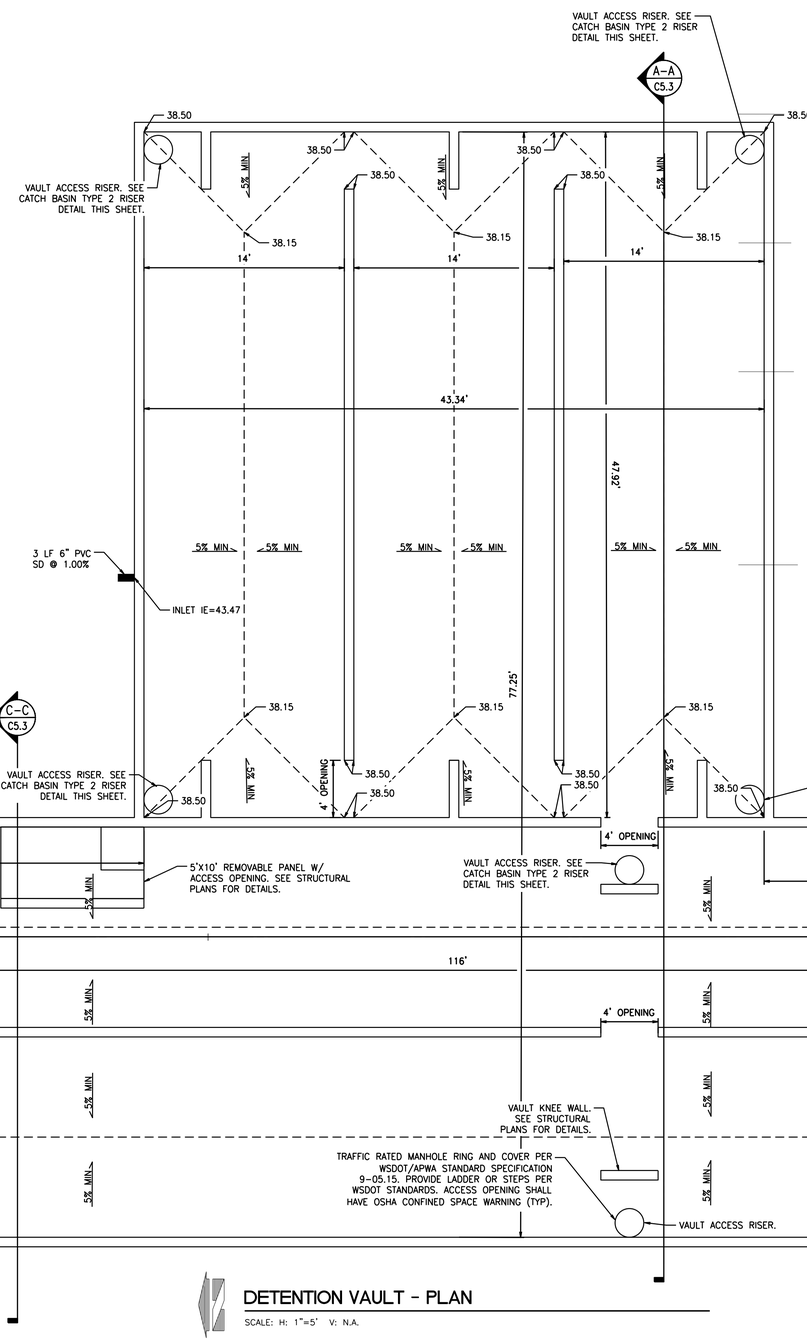

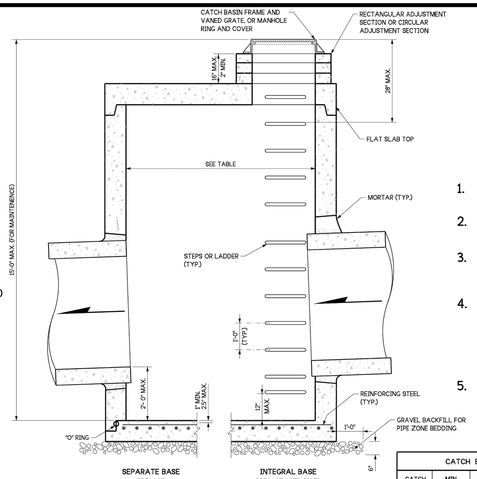

NOTES:

1. No steps are required when height is 4' or less.
2. The bottom of the precast catch basin may be sloped to facilitate cleaning.
3. The rectangular frame and grate may be installed with the flange up or down. The frame may be cast into the adjustment section.
4. Knockouts shall have a wall thickness of 2" (in) minimum to 2.5" (in) maximum. Provide a 1.5" (in) minimum gap between the knockout wall and the outside of the pipe. After the pipe is installed, fill the gap with joint mortar in accordance with **Standard Specification Section 9-04.3.**
5. Pipe allowances will vary depending on the pipe material used. Contact the Region Hydraulics Engineer for assistance.

CATCH BASIN DIMENSIONS

CATCH BASIN DIAMETER	MIN. WALL THICKNESS	MIN. BASE THICKNESS	MAXIMUM KNOCKOUT SIZE	MINIMUM DISTANCE BETWEEN KNOCKOUTS
48"	4"	6"	36"	8"
54"	4.5"	8"	42"	8"
60"	5"	8"	48"	8"
72"	6"	8"	60"	12"
84"	8"	12"	72"	12"
96"	8"	12"	84"	12"
120"	10"	12"	96"	12"
144"	12"	12"	108"	12"

PIPE ALLOWANCES

CATCH BASIN DIAMETER	PIPE MATERIAL WITH MAXIMUM INSIDE DIAMETER				
	CONCRETE	ALL METAL	CPSSP ① PP ④	SOLID WALL PVC ②	PROFILE WALL PVC ③
48"	24"	30"	24"	30"	30"
54"	30"	36"	30"	36"	36"
60"	36"	42"	36"	42"	42"
72"	42"	54"	42"	48"	48"
84"	54"	60"	54"	48"	48"
96"	60"	72"	60"	48"	48"
120"	66"	84"	60"	48"	48"
144"	78"	96"	60"	48"	48"

① Corrugated Polyethylene Storm Sewer Pipe (See Standard Specification Section 9-05.20)
② (See Standard Specification Section 9-05.12(1))
③ (See Standard Specification Section 9-05.12(2))
④ Polypropolyne Pipe (See Standard Specification Section 9-05.24)

1 / C5.2 VAULT ACCESS RISER
SCALE: NTS

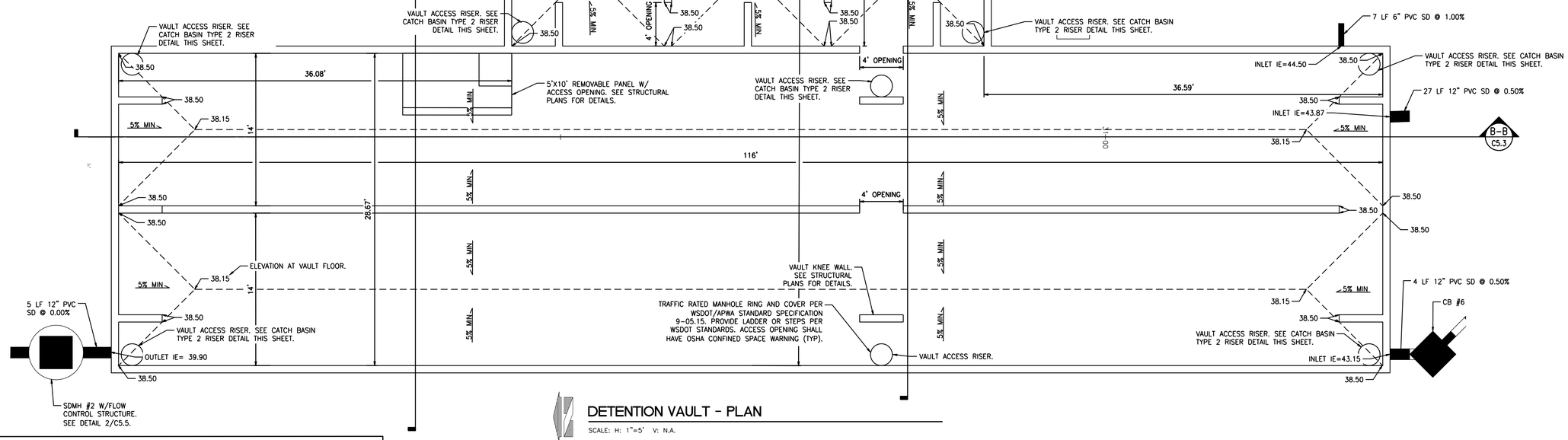

DETENTION VAULT - PLAN

SCALE: H: 1"=5' V: N.A.

UTILITY CONFLICT NOTE:

THE CONTRACTOR SHALL BE RESPONSIBLE FOR VERIFYING THE LOCATION, DIMENSION, AND DEPTH OF ALL EXISTING UTILITIES WHETHER SHOWN ON THESE PLANS OR NOT BY POTHOLING THE UTILITIES AND SURVEYING THE HORIZONTAL AND VERTICAL LOCATION PRIOR TO CONSTRUCTION. THIS SHALL INCLUDE CALLING UTILITY LOCATE AT 811 48 HOURS IN ADVANCE AND THEN POTHOLING ALL OF THE EXISTING UTILITIES AT LOCATIONS OF NEW UTILITY CROSSINGS TO PHYSICALLY VERIFY WHETHER OR NOT CONFLICTS EXIST. LOCATIONS OF SAID UTILITIES AS SHOWN ON THESE PLANS ARE BASED UPON THE UNVERIFIED PUBLIC INFORMATION AND ARE SUBJECT TO VARIATION. IF CONFLICTS SHOULD OCCUR, THE CONTRACTOR SHALL NOTIFY BARGHAUSEN CONSULTING ENGINEERS, INC. TO RESOLVE ALL PROBLEMS PRIOR TO PROCEEDING WITH CONSTRUCTION.

811 Know what's **below.** **Call** before you dig. Dial 811

STATE OF WASHINGTON ALIE HEILMAN 41819 REGISTERED PROFESSIONAL ENGINEER
Aug 23, 2023

CATCH BASIN TYPE 2

STANDARD PLAN B-10.20-03

SHEET 1 OF 1 SHEET

APPROVED FOR PUBLICATION
Aug 23, 2023
STATE DESIGN ENGINEER
Washington State Department of Transportation

CLIENT: bp ARCO BP WEST COAST PRODUCTS, LLC

Barghausen Consulting Engineers, Inc.
18215 72nd Avenue South
Kent, WA 98032
425.251.6222
barghausen.com

NO.	DATE	REVISION DESCRIPTION
1		
2		
3		
4		
5		
6		
7		
8		
9		
10		
11		
12		

SEAL: STATE OF WASHINGTON ALEX WHITE 21036777 REGISTERED PROFESSIONAL ENGINEER
2/9/24

DEVELOPMENT INFORMATION:
ARCO NTI
3400 am/pm
FUEL CANOPY w/ 6 MPD's

SITE ADDRESS:
1402 S. MERIDIAN
@ HIGHWAY 512
PUYALLUP, WASHINGTON

FACILITY #TBD

DESIGNED BY: JDF	ALLIANCE Z&DM:
CHECKED BY: AW	BP REPM:
DRAWN BY: JDF	ALLIANCE PM:
VERSION: -	PROJECT NO: 21730

DRAWING TITLE: DETENTION VAULT PLAN

SHEET NO: C5.2

APPROVED

BY _____
CITY OF PUYALLUP
DEVELOPMENT ENGINEERING

DATE _____

NOTE: THIS APPROVAL IS VOID AFTER 180 DAYS FROM APPROVAL DATE.
THE CITY WILL NOT BE RESPONSIBLE FOR ERRORS AND/OR OMISSIONS ON THESE PLANS.
FIELD CONDITIONS MAY DICTATE CHANGES TO THESE PLANS AS DETERMINED BY THE DEVELOPMENT ENGINEERING MANAGER.

P:\21000s\21730\engineering\21730-M.dwg 2/6/2024 4:33 PM JFLEHARTY

DETENTION VAULT CROSS SECTIONS

FOR

ARCO ampm PUYALLUP

SEC. 33, TWN. 20 N, RGE. 4 E, W.M.

CITY OF PUYALLUP, PIERCE COUNTY

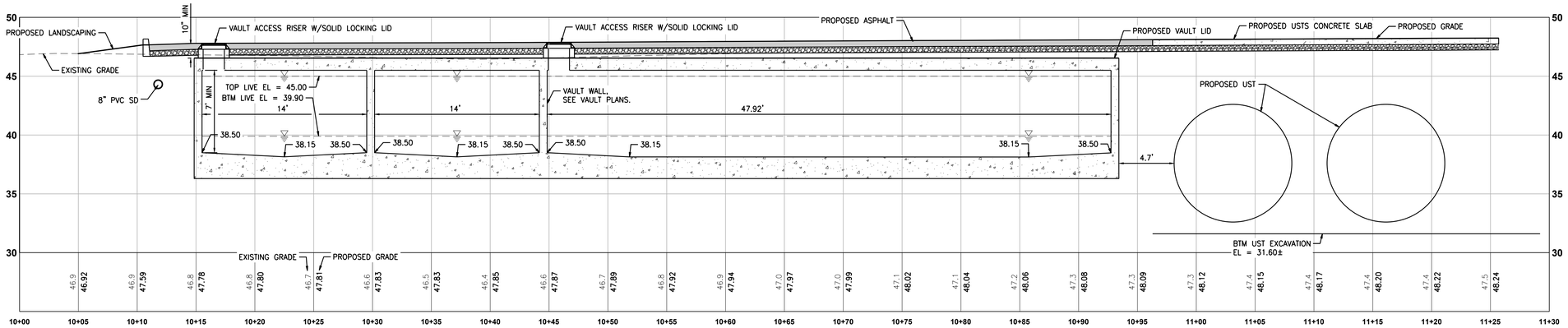

A-A / C5.3 **VAULT SECTION A-A - LOOKING NORTH**
SCALE: H: 1" = 5', V: 1" = 5'

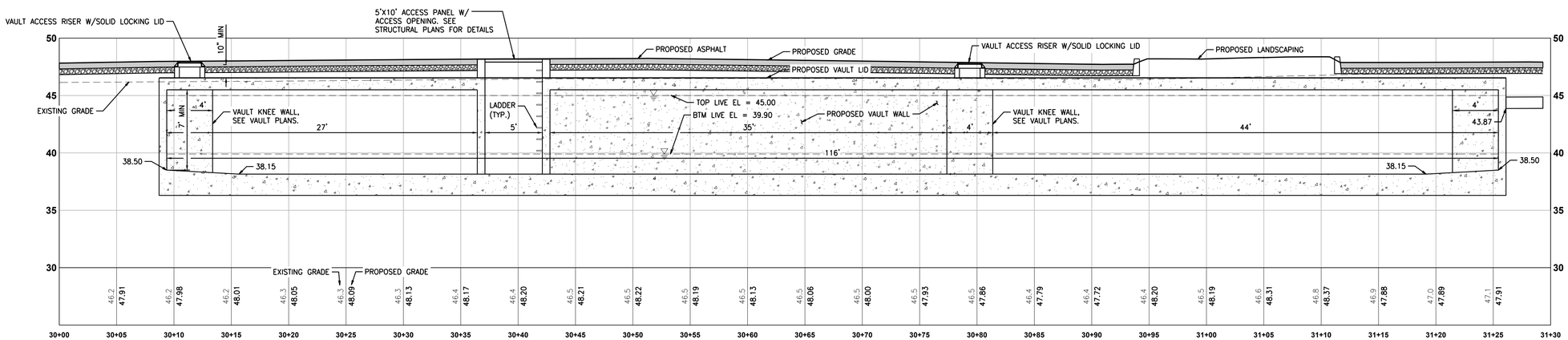

B-B / C5.3 **VAULT SECTION B-B - LOOKING EAST**
SCALE: H: 1" = 5', V: 1" = 5'

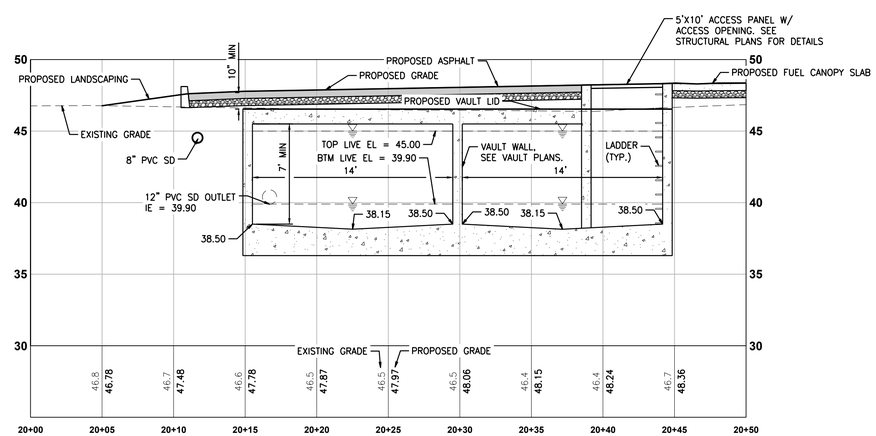

C-C / C5.3 **VAULT SECTION B-B - LOOKING NORTH**
SCALE: H: 1" = 5', V: 1" = 5'

UTILITY CONFLICT NOTE:

THE CONTRACTOR SHALL BE RESPONSIBLE FOR VERIFYING THE LOCATION, DIMENSION, AND DEPTH OF ALL EXISTING UTILITIES WHETHER SHOWN ON THESE PLANS OR NOT BY POTHOLING THE UTILITIES AND SURVEYING THE HORIZONTAL AND VERTICAL LOCATION PRIOR TO CONSTRUCTION. THIS SHALL INCLUDE CALLING UTILITY LOCATE AT 811 48 HOURS IN ADVANCE AND THEN POTHOLING ALL OF THE EXISTING UTILITIES AT LOCATIONS OF NEW UTILITY CROSSINGS TO PHYSICALLY VERIFY WHETHER OR NOT CONFLICTS EXIST. LOCATIONS OF SAID UTILITIES AS SHOWN ON THESE PLANS ARE BASED UPON THE UNVERIFIED PUBLIC INFORMATION AND ARE SUBJECT TO VARIATION. IF CONFLICTS SHOULD OCCUR, THE CONTRACTOR SHALL NOTIFY BARGHAUSEN CONSULTING ENGINEERS, INC. TO RESOLVE ALL PROBLEMS PRIOR TO PROCEEDING WITH CONSTRUCTION.

811 Know what's **below.** **Call** before you dig. Dial 811

DETENTION VAULT PERMIT NOTE:

A SEPARATE BUILDING PERMIT IS REQUIRED FOR THE PROPOSED DETENTION VAULT. PLEASE REFER TO SEPARATE DETENTION VAULT PERMIT DRAWINGS FOR VAULT STRUCTURAL DESIGN.

APPROVED

BY _____
CITY OF PUYALLUP
DEVELOPMENT ENGINEERING

DATE _____

NOTE: THIS APPROVAL IS VOID AFTER 180 DAYS FROM APPROVAL DATE.
THE CITY WILL NOT BE RESPONSIBLE FOR ERRORS AND/OR OMISSIONS ON THESE PLANS.
FIELD CONDITIONS MAY DICTATE CHANGES TO THESE PLANS AS DETERMINED BY THE DEVELOPMENT ENGINEERING MANAGER.

CLIENT: bp

ARCO
BP WEST COAST PRODUCTS, LLC

Barghausen Consulting Engineers, Inc.
18215 72nd Avenue South
Kent, WA 98032
425.251.6222
barghausen.com

NO.	DATE	REVISION DESCRIPTION
1		
2		
3		
4		
5		
6		
7		
8		
9		
10		
11		
12		

SEAL:

ALEX WHITE · STATE OF WASHINGTON · 21036777 · REGISTERED PROFESSIONAL ENGINEER

2/9/24

DEVELOPMENT INFORMATION:
ARCO NTI
3400 am/pm
FUEL CANOPY w/ 6 MPD's

SITE ADDRESS:
1402 S. MERIDIAN
@ HIGHWAY 512
PUYALLUP, WASHINGTON

FACILITY #TBD

DESIGNED BY:	JDF	ALLIANCE ZADM:	
CHECKED BY:	AW	BP REPM:	
DRAWN BY:	JDF	ALLIANCE PM:	
VERSION:	- -	PROJECT NO:	21730

DRAWING TITLE:
DETENTION VAULT CROSS SECTIONS

SHEET NO:
C5.3

P:\21000s\21730\engineering\21730-M.dwg 2/8/2024 4:33 PM JFLEHARTY

DRAINAGE NOTES AND DETAILS

FOR

ARCO ampm PUYALLUP

SEC. 33, TWN. 20 N, RGE. 4 E, W.M.

CITY OF PUYALLUP, PIERCE COUNTY

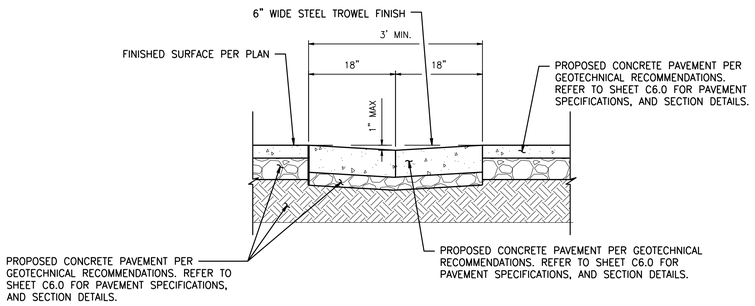

1 / C5.4 **CONCRETE DRAINAGE SWALE**
SCALE: NTS

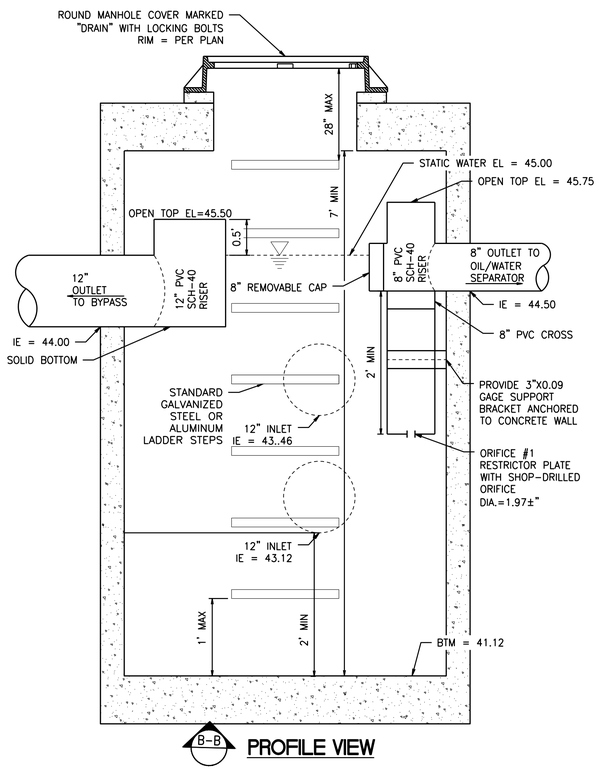

3 / C5.4 **SDMH #3 - TYPE 2 - 54" FLOW SPLITTER**
SCALE: NTS

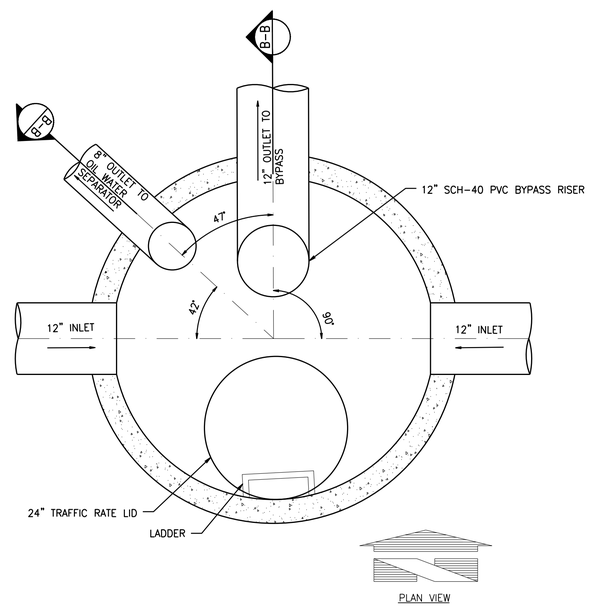

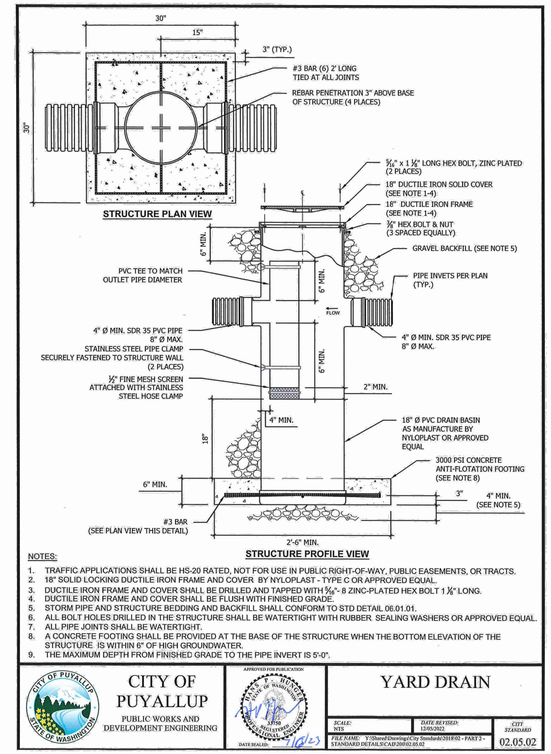

NOTES:

1. TRAFFIC APPLICATIONS SHALL BE HS-20 RATED, NOT FOR USE IN PUBLIC RIGHT-OF-WAY, PUBLIC EASEMENTS, OR TRACTS.
2. 18" SOLID LOCKING DUCTILE IRON FRAME AND COVER BY NYLOPLAST - TYPE C OR APPROVED EQUAL.
3. DUCTILE IRON FRAME AND COVER SHALL BE DRILLED AND TAPPED WITH 5/8"- 8 ZINC-PLATED HEX BOLT 1 1/4" LONG.
4. DUCTILE IRON FRAME AND COVER SHALL BE FLUSH WITH FINISHED GRADE.
5. STORM PIPE AND STRUCTURE BEDDING AND BACKFILL SHALL CONFORM TO STD DETAIL 06.01.01.
6. ALL BOLT HOLES DRILLED IN THE STRUCTURE SHALL BE WATERTIGHT WITH RUBBER SEALING WASHERS OR APPROVED EQUAL.
7. ALL PIPE JOINTS SHALL BE WATERTIGHT.
8. A CONCRETE FOOTING SHALL BE PROVIDED AT THE BASE OF THE STRUCTURE WHEN THE BOTTOM ELEVATION OF THE STRUCTURE IS WITHIN 6" OF HIGH GROUNDWATER.
9. THE MAXIMUM DEPTH FROM FINISHED GRADE TO THE PIPE INVERT IS 5'-0".

CITY OF PUYALLUP
PUBLIC WORKS AND DEVELOPMENT ENGINEERING

APPROVED FOR PUBLICATION
DATE SIGNED: 7/18/23

YARD DRAIN

SCALE: NTS	DATE REVISED: 12/05/2023	CITY STANDARD 02.05.02

FILE NAME: Y:\Shared\Drawings\City Standards\2018\02 - PART 2 - STANDARD DETAILS\CAD\2005\02.05.02

2 / C5.4 **CITY OF PUYALLUP YARD DRAIN**
SCALE: NTS

UTILITY CONFLICT NOTE:

THE CONTRACTOR SHALL BE RESPONSIBLE FOR VERIFYING THE LOCATION, DIMENSION, AND DEPTH OF ALL EXISTING UTILITIES WHETHER SHOWN ON THESE PLANS OR NOT BY POTHOLING THE UTILITIES AND SURVEYING THE HORIZONTAL AND VERTICAL LOCATION PRIOR TO CONSTRUCTION. THIS SHALL INCLUDE CALLING UTILITY LOCATE AT 811 48 HOURS IN ADVANCE AND THEN POTHOLING ALL OF THE EXISTING UTILITIES AT LOCATIONS OF NEW UTILITY CROSSINGS TO PHYSICALLY VERIFY WHETHER OR NOT CONFLICTS EXIST. LOCATIONS OF SAID UTILITIES AS SHOWN ON THESE PLANS ARE BASED UPON THE UNVERIFIED PUBLIC INFORMATION AND ARE SUBJECT TO VARIATION. IF CONFLICTS SHOULD OCCUR, THE CONTRACTOR SHALL NOTIFY BARGHAUSEN CONSULTING ENGINEERS, INC. TO RESOLVE ALL PROBLEMS PRIOR TO PROCEEDING WITH CONSTRUCTION.

811 Know what's **below.** **Call** before you dig. Dial 811

APPROVED

BY _____
CITY OF PUYALLUP
DEVELOPMENT ENGINEERING

DATE _____

NOTE: THIS APPROVAL IS VOID AFTER 180 DAYS FROM APPROVAL DATE.
THE CITY WILL NOT BE RESPONSIBLE FOR ERRORS AND/OR OMISSIONS ON THESE PLANS.
FIELD CONDITIONS MAY DICTATE CHANGES TO THESE PLANS AS DETERMINED BY THE DEVELOPMENT ENGINEERING MANAGER.

CLIENT: bp

ARCO
BP WEST COAST PRODUCTS, LLC

Barghausen Consulting Engineers, Inc.
18215 72nd Avenue South
Kent, WA 98032
425.251.6222
barghausen.com

NO.	DATE	REVISION DESCRIPTION
1		
2		
3		
4		
5		
6		
7		
8		
9		
10		
11		
12		

SEAL: ALEX WHITE, STATE OF WASHINGTON, 21036777, REGISTERED PROFESSIONAL ENGINEER
2/9/24

DEVELOPMENT INFORMATION:
ARCO NTI
3400 am/pm
FUEL CANOPY w/ 6 MPD's

SITE ADDRESS:
1402 S. MERIDIAN
@ HIGHWAY 512
PUYALLUP, WASHINGTON

FACILITY #TBD

DESIGNED BY:	JDF	ALLIANCE ZAOM:	
CHECKED BY:	AW	BP REPM:	
DRAWN BY:	JDF	ALLIANCE PM:	
VERSION:	-	PROJECT NO:	21730

DRAWING TITLE: DRAINAGE NOTES AND DETAILS

SHEET NO: C5.4

P:\21000s\21730\engineering\21730-M.dwg 2/8/2024 4:33 PM JFLEHARTY

DRAINAGE DETAILS

FOR

ARCO ampm PUYALLUP

SEC. 33, TWN. 20 N, RGE. 4 E, W.M.

CITY OF PUYALLUP, PIERCE COUNTY

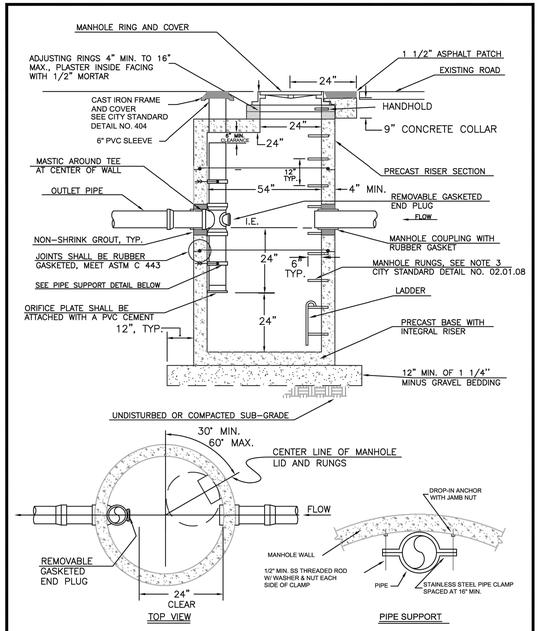

CITY OF PUYALLUP DEVELOPMENT ENGINEERING and PUBLIC WORKS DEPARTMENTS	FLOW CONTROL MANHOLE WITH FLAT TOP				
	DRAWN BY: LINDA LANSING	CHECKED BY: LINDA LIAN	APPROVED BY: COLLEEN HARRIS	REVISED BY: XXXX	CITY STANDARD
	FILE NAME: F:\DWG\COMMON\STDS\CITY\200902_SD\02.01.07		DATE APPROVED: 09/01/1992	DATE REVISED: 06/01/2003	SCALE: NTS 02.01.07

1 C5.5 **CITY OF PUYALLUP FLOW CONTROL DETAIL - FOR REFERENCE ONLY**
SCALE: NTS

NOTES FOR FLOW CONTROL MANHOLE:

1. NEAT LINE CUTS SHALL BE AT TOP WITH A HOT PAVING GRADE ASPHALT AND FACE OF CUT TACKED.
2. FLOW CONTROL MANHOLES SHALL BE USED AS A SINGLE USE STRUCTURE.
3. MANHOLE RUNG SHALL CONFORM TO SECTION R, ASTM C 478 (ASSHTO M-199) AND MEET ALL WISHA REQUIREMENTS. MANHOLE RUNGS SHALL BE PARALLEL OR APPROXIMATELY RADIAL AT THE OPTION OF THE MANUFACTURER, EXCEPT THAT ALL STEPS IN ANY MANHOLE SHALL BE SIMILAR. PENETRATION OF OUTER WALL BY A RUNG LEG IS PROHIBITED. SEE MANHOLE STEP AND LADDER DETAIL, CITY STANDARD DETAIL NO. 06.01.04.
4. PRECAST RISER SECTION SHALL BE FURNISHED WITH CUTOUTS OR KNOCKOUTS. KNOCKOUTS SHALL HAVE WALL THICKNESS OF TWO (2) INCHES MINIMUM. KNOCKOUT OR CUTOUT HOLE SIZE IS EQUAL TO PIPE OUTER DIAMETER PLUS MANHOLE WALL THICKNESS. MINIMUM DISTANCE BETWEEN HOLES IS EIGHT (8) INCHES.
5. PRECAST CONCRETE MANHOLE COMPONENTS SHALL CONFORM TO ASTM C 478.
6. FLEXIBLE JOINTS SHALL BE RUBBER GASKETED IN ACCORDANCE WITH THE WSDOT STANDARD SPECIFICATIONS. MORTARED, DRY-PACKED, OR CAST-IN-PLACE JOINTS WILL BE PERMITTED FOR CONNECTIONS TO OR THROUGH MANHOLES. A FLEXIBLE GASKETED JOINT SHALL BE INSTALLED WITHIN ONE (1) FOOT OF EACH CONNECTION TO OR THROUGH SAID MANHOLES. CONNECTIONS TO MANHOLE WITH PVC PIPE SHALL UTILIZE A MANHOLE COUPLING AND RUBBER GASKET.
7. THE COVER ON THE MANHOLE SHALL BE MARKED WITH "STORM" OR "DRAIN" IN TWO (2) INCH RAISED LETTERS. SEE MANHOLE RING AND COVER DETAIL, CITY STANDARDS DETAIL NO. 06.01.02 AND 06.01.03.
8. STAINLESS STEEL PIPE CLAMP WITH 1/2" DIAMETER STAINLESS STEEL THREADED ROD WITH WASHER AND NUT EACH SIDE OF CLAMP. PROVIDE 1/2" DIAMETER DROP-IN ANCHOR WITH JAMB NUT AT WALL. PIPE CLAMPS SHALL BE PLACED AT SIXTEEN (16) INCHES ON CENTER.
9. FLOW CONTROL UNIT SHALL BE MADE FROM PVC PIPE AND SHALL CONFORM TO THE STANDARD PIPE SPECIFICATIONS.

CITY OF PUYALLUP DEVELOPMENT ENGINEERING and PUBLIC WORKS DEPARTMENTS	FLOW CONTROL MANHOLE NOTES				
	DRAWN BY: LINDA LANSING	CHECKED BY: LINDA LIAN	APPROVED BY: COLLEEN HARRIS	REVISED BY: XXXX	CITY STANDARD
	FILE NAME: F:\DWG\COMMON\STDS\CITY\200902_SD\02.01.08		DATE APPROVED: 09/01/1992	DATE REVISED: 06/01/2003	SCALE: NTS 02.01.08

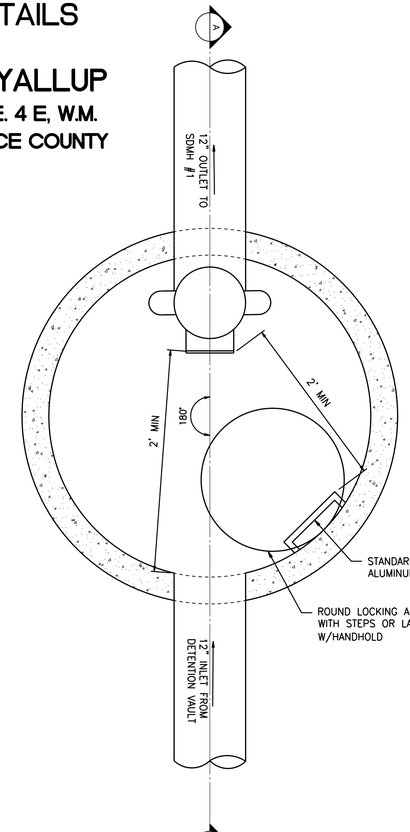

PLAN VIEW

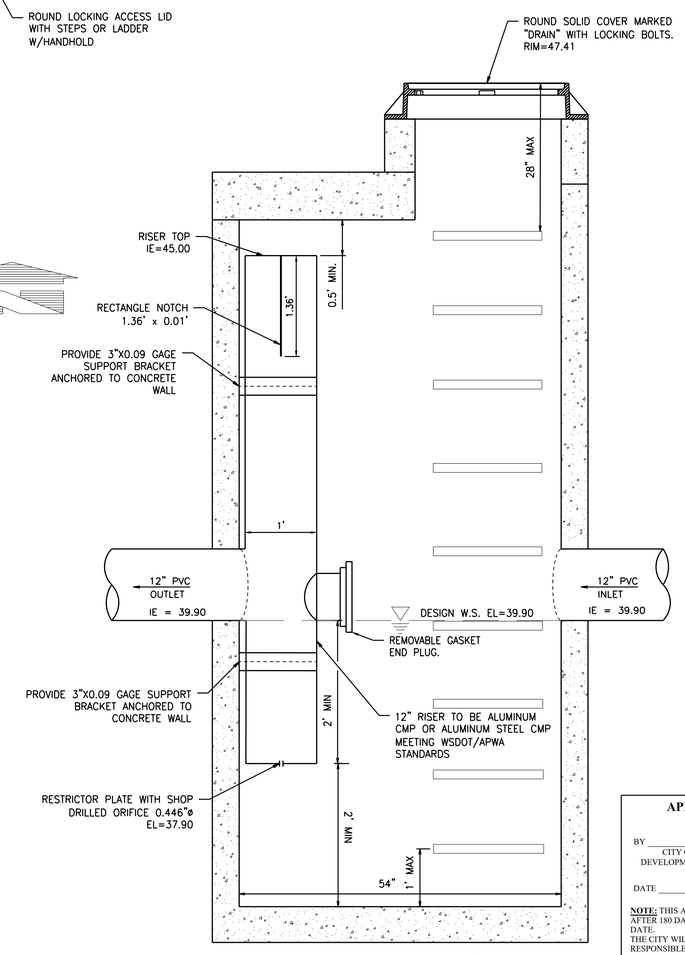

PROFILE VIEW

2 C5.5 **SDMH #2 - FLOW CONTROL MANHOLE - TYPE II-54"**
SCALE: NTS

UTILITY CONFLICT NOTE:

THE CONTRACTOR SHALL BE RESPONSIBLE FOR VERIFYING THE LOCATION, DIMENSION, AND DEPTH OF ALL EXISTING UTILITIES WHETHER SHOWN ON THESE PLANS OR NOT BY POTHOLING THE UTILITIES AND SURVEYING THE HORIZONTAL AND VERTICAL LOCATION PRIOR TO CONSTRUCTION. THIS SHALL INCLUDE CALLING UTILITY LOCATE AT 811 48 HOURS IN ADVANCE AND THEN POTHOLING ALL OF THE EXISTING UTILITIES AT LOCATIONS OF NEW UTILITY CROSSINGS TO PHYSICALLY VERIFY WHETHER OR NOT CONFLICTS EXIST. LOCATIONS OF SAID UTILITIES AS SHOWN ON THESE PLANS ARE BASED UPON THE UNVERIFIED PUBLIC INFORMATION AND ARE SUBJECT TO VARIATION. IF CONFLICTS SHOULD OCCUR, THE CONTRACTOR SHALL NOTIFY BARGHAUSEN CONSULTING ENGINEERS, INC. TO RESOLVE ALL PROBLEMS PRIOR TO PROCEEDING WITH CONSTRUCTION.

811 Know what's **below.** **Call** before you dig. Dial 811

APPROVED

BY _____
CITY OF PUYALLUP
DEVELOPMENT ENGINEERING

DATE _____

NOTE: THIS APPROVAL IS VOID AFTER 180 DAYS FROM APPROVAL DATE.
THE CITY WILL NOT BE RESPONSIBLE FOR ERRORS AND/OR OMISSIONS ON THESE PLANS.
FIELD CONDITIONS MAY DICTATE CHANGES TO THESE PLANS AS DETERMINED BY THE DEVELOPMENT ENGINEERING MANAGER.

CLIENT: bp

ARCO
BP WEST COAST PRODUCTS, LLC

Barghausen Consulting Engineers, Inc.
18215 72nd Avenue South
Kent, WA 98032
425.251.6222
barghausen.com

NO.	DATE	REVISION DESCRIPTION
1		
2		
3		
4		
5		
6		
7		
8		
9		
10		
11		
12		

SEAL: ALEX WHITE, STATE OF WASHINGTON, 21506777, REGISTERED PROFESSIONAL ENGINEER — 2/9/24

DEVELOPMENT INFORMATION:
ARCO NTI
3400 am/pm
FUEL CANOPY w/ 6 MPD's

SITE ADDRESS:
1402 S. MERIDIAN
@ HIGHWAY 512
PUYALLUP, WASHINGTON

FACILITY #TBD

DESIGNED BY: JDF	ALLIANCE Z&CM:
CHECKED BY: AW	BP REPM:
DRAWN BY: JDF	ALLIANCE PM:
VERSION: -	PROJECT NO: 21730

DRAWING TITLE: **DRAINAGE DETAILS**

SHEET NO: **C5.5**

P:\21000s\21730\engineering\21730-M.dwg 2/6/2024 4:33 PM JFLEHARTY

DRAINAGE DETAILS

FOR

ARCO ampm PUYALLUP

SEC. 33, TWN. 20 N, RGE. 4 E, W.M.

CITY OF PUYALLUP, PIERCE COUNTY

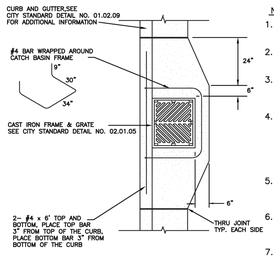

PLAN VIEW

NOTES:

1. MAXIMUM LENGTH OF PIPE BETWEEN CATCH BASINS SHALL BE 400'.
2. MAXIMUM GUTTER LINE FLOW LENGTH SHALL BE 300'.
3. TYPE II CATCH BASIN IS USED FOR DEPTHS GREATER THAN 5'–0" FROM TOP OF GRATE TO I.E.(PIPE INVERT).
4. PRECAST BASE SECTION SHALL BE FURNISHED WITH CUTOUTS OR KNOCKOUTS. KNOCKOUTS SHALL HAVE A WALL THICKNESS OF 2" MIN. KNOCKOUT OR CUTOUT HOLE SIZE SHALL EQUAL THE PIPE OUTER DIAMETER PLUS THE MANHOLE WALL THICKNESS.
5. SEE CITY STANDARD DETAIL NO. 02.01.01 FOR ADDITIONAL INFORMATION REGARDING INSTALLATION OF MANHOLE SECTION.
6. CATCH BASIN SHALL BE CONSTRUCTED IN ACCORDANCE WITH ASTM C 478 (AASHTO M 199) AND ASTM C 890 UNLESS OTHERWISE NOTED.
7. CATCH BASIN MARKER WILL BE AFFIXED WITH MANUFACTURER'S EPOXY IN DRY WEATHER, 40 DEGREES OR WARMER. IF CURB EXIST MARKER IS PLACED ON TOP OF CURB, IF A RAISED EDGE PLACE MARKER ON THE WEDGE, IF NO CURB PLACE ON PAVEMENT ON SIDE LEAST EXPOSED TO TRAFFIC

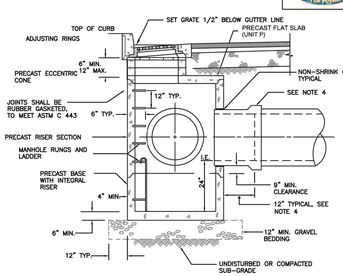

CITY OF PUYALLUP
DEVELOPMENT ENGINEERING and PUBLIC WORKS DEPARTMENTS

CATCH BASIN TYPE II

GRAPH BY	CHECKED BY	APPROVED BY	REVISED BY	CITY STANDARD
LINDA LANSING	LINDA LIAN	COLLEEN HARRIS	XXXX	02.01.04
FILE NAME: H:\DWG\COMMON\STD\CITY\2009\02_SD\02.01.04		DATE APPROVED: 04/01/1992	DATE REVISED: 06/01/2005	SCALE: NTS

1 C5.6 **TYPE 2 CATCH BASIN**
SCALE: NTS

SITE SPECIFIC DATA			
PROJECT NUMBER		773709	
PROJECT NAME		Arco Puyallup (BCE# 21730)	
PROJECT LOCATION		Puyallup, WA	
STRUCTURE ID		MWS	
TREATMENT REQUIRED			
TREATMENT FLOW (CFS)			0.074
PRETREATMENT LOADING RATE (GPM/SF)			2.1 GPM/SF
WETLAND MEDIA LOADING RATE (GPM/SF)			1.0
PEAK BYPASS REQUIRED (CFS) – IF APPLICABLE			0.8523 (CFS)
PIPE DATA	I.E.	MATERIAL	DIAMETER
INLET PIPE 1	44.97'		
INLET PIPE 2			
OUTLET PIPE	43.20'		
	PRETREATMENT	BIOFILTRATION	DISCHARGE
RIM ELEVATION	47.56'	47.56'	47.56'
SURFACE LOAD	HS-20		
NOTES: Treatment HGL = 44.95' Peak HGL = 45.15'			

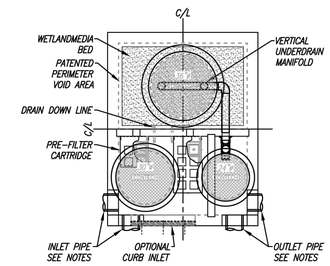

PLAN VIEW

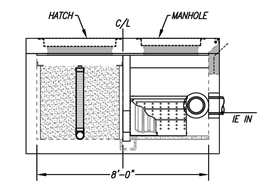

LEFT END VIEW

INSTALLATION NOTES

1. CONTRACTOR TO PROVIDE ALL LABOR, EQUIPMENT, MATERIALS AND INCIDENTALS REQUIRED TO OFFLOAD AND INSTALL THE SYSTEM AND APPURTENANCES IN ACCORDANCE WITH THIS DRAWING AND THE MANUFACTURER'S SPECIFICATIONS, UNLESS OTHERWISE STATED IN MANUFACTURER'S CONTRACT.
2. UNIT MUST BE INSTALLED ON LEVEL BASE. MANUFACTURER RECOMMENDS A MINIMUM 6" LEVEL ROCK BASE UNLESS SPECIFIED BY THE PROJECT ENGINEER. CONTRACTOR IS RESPONSIBLE FOR VERIFYING PROJECT ENGINEER'S RECOMMENDED BASE SPECIFICATIONS.
3. CONTRACTOR TO SUPPLY AND INSTALL ALL EXTERNAL CONNECTING PIPES. ALL PIPES MUST BE FLUSH WITH INSIDE SURFACE OF CONCRETE (PIPES CANNOT INTRUDE BEYOND FLUSH). INVERT OF OUTFLOW PIPE MUST BE FLUSH WITH DISCHARGE CHAMBER FLOOR. ALL PIPES SHALL BE SEALED WATERTIGHT PER MANUFACTURER'S STANDARD CONNECTION DETAIL.
4. CONTRACTOR RESPONSIBLE FOR CONTACTING CONTECH FOR ACTIVATION OF UNIT. MANUFACTURER'S WARRANTY IS VOID WITHOUT PROPER ACTIVATION BY A CONTECH REPRESENTATIVE.
5. VERTICAL HEIGHT VARIES BASED ON SITE SPECIFIC REQUIREMENTS.

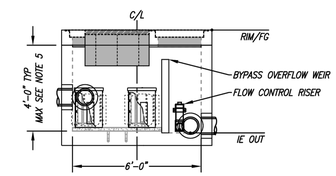

ELEVATION VIEW

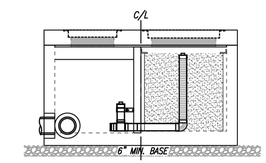

RIGHT END VIEW

MODULAR WETLANDS
FOR PATENT INFORMATION, GO TO www.ContechES.com/IP

PROPRIETARY AND CONFIDENTIAL:
THE INFORMATION CONTAINED IN THIS DOCUMENT IS THE SOLE PROPERTY OF CONTECH AND ITS COMPANIES. THIS DOCUMENT, NOR ANY PART THEREOF, MAY BE USED, REPRODUCED OR MODIFIED IN ANY MANNER WITH OUT THE WRITTEN CONSENT OF CONTECH.

CONTECH ENGINEERED SOLUTIONS LLC
www.ContechES.com

MWS-L-6-8-V-UG
STORMWATER BIOFILTRATION SYSTEM
STANDARD DETAIL

2 C5.6 **MODULAR WETLAND UNIT**
SCALE: NTS

UTILITY CONFLICT NOTE:

THE CONTRACTOR SHALL BE RESPONSIBLE FOR VERIFYING THE LOCATION, DIMENSION, AND DEPTH OF ALL EXISTING UTILITIES WHETHER SHOWN ON THESE PLANS OR NOT BY POTHOLING THE UTILITIES AND SURVEYING THE HORIZONTAL AND VERTICAL LOCATION PRIOR TO CONSTRUCTION. THIS SHALL INCLUDE CALLING UTILITY LOCATE AT 811 48 HOURS IN ADVANCE AND THEN POTHOLING ALL OF THE EXISTING UTILITIES AT LOCATIONS OF NEW UTILITY CROSSINGS TO PHYSICALLY VERIFY WHETHER OR NOT CONFLICTS EXIST. LOCATIONS OF SAID UTILITIES AS SHOWN ON THESE PLANS ARE BASED UPON THE UNVERIFIED PUBLIC INFORMATION AND ARE SUBJECT TO VARIATION. IF CONFLICTS SHOULD OCCUR, THE CONTRACTOR SHALL NOTIFY BARGHAUSEN CONSULTING ENGINEERS, INC. TO RESOLVE ALL PROBLEMS PRIOR TO PROCEEDING WITH CONSTRUCTION.

811 Know what's **below.** **Call** before you dig. Dial 811

APPROVED

BY _____
CITY OF PUYALLUP
DEVELOPMENT ENGINEERING

DATE _____

NOTE: THIS APPROVAL IS VOID AFTER 180 DAYS FROM APPROVAL DATE.
THE CITY WILL NOT BE RESPONSIBLE FOR ERRORS AND/OR OMISSIONS ON THESE PLANS.
FIELD CONDITIONS MAY DICTATE CHANGES TO THESE PLANS AS DETERMINED BY THE DEVELOPMENT ENGINEERING MANAGER.

CLIENT:
bp
ARCO
BP WEST COAST PRODUCTS, LLC

Barghausen Consulting Engineers, Inc.
18215 72nd Avenue South
Kent, WA 98032
425.251.6222
barghausen.com

NO.	DATE	REVISION DESCRIPTION
1		
2		
3		
4		
5		
6		
7		
8		
9		
10		
11		
12		

SEAL:
ALEX WHITE · STATE OF WASHINGTON · 21030777 · REGISTERED PROFESSIONAL ENGINEER
2/9/24

DEVELOPMENT INFORMATION:
ARCO NTI
3400 am/pm
FUEL CANOPY w/ 6 MPD's

SITE ADDRESS:
1402 S. MERIDIAN
@ HIGHWAY 512
PUYALLUP, WASHINGTON

FACILITY #TBD

DESIGNED BY:	JDF	ALLIANCE Z&DM:	
CHECKED BY:	AW	BP REPM:	
DRAWN BY:	JDF	ALLIANCE PM:	
VERSION:	-	PROJECT NO:	21730

DRAWING TITLE:
DRAINAGE DETAILS

SHEET NO:
C5.6

P:\21000s\21730\engineering\21730-M.dwg 2/8/2024 4:33 PM JFLEHARTY

DRAINAGE DETAILS

FOR

ARCO ampm PUYALLUP

SEC. 33, TWN. 20 N, RGE. 4 E, W.M.

CITY OF PUYALLUP, PIERCE COUNTY

Oldcastle Precast® AUBURN — *Delivering Reliability*

577-CPS OIL WATER SEPARATOR

Project Plate Area = 592 Sq/ft
Maximum Process Flow = 555 GPM

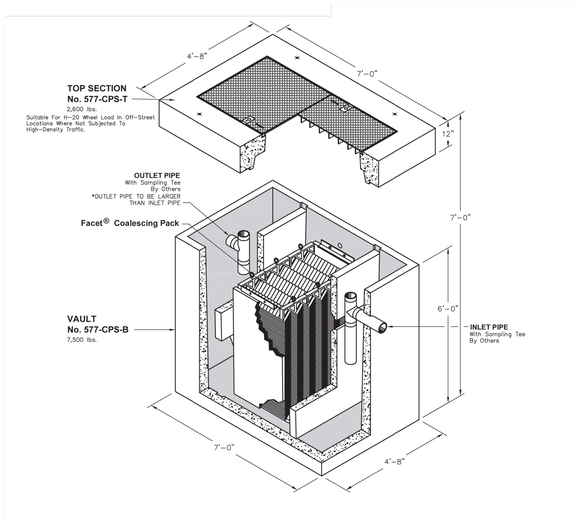

FOR DETAILS, SEE REVERSE>>

Items Shown Are Subject To Change Without Notice
Issue Date: April 2016

142

© 1995-2016 Oldcastle Precast, Inc.

Mailing Address: PO Box 588, Auburn, WA 98071
Phone: 800-892-1538
Fax: 253-735-4201
Email: opauburn@oldcastle.com
opauburn.com

Oldcastle Precast® — *Delivering Reliability*

577-CPS

Project Plate Area = 592 Sq/ft
Maximum Process Flow = 555 GPM

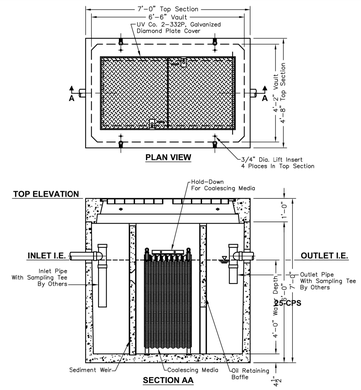

STRUCTURAL NOTES:
1. Concrete: 28 Day Compressive Strength f'c= 7000 psi
2. Rebar: ASTM A-615 Grade 60
3. Mesh: ASTM A-185 Grade 65
4. Design: ACI-318-05 Building Code
   ASTM C-890 "Minimum Structural Design Loading For Underground Precast Concrete Water and Wastewater Structures"
5. Loads: HS-20 Truck Wheel w/ 30% Impact Per AASHTO

GENERAL NOTES:
1. All Baffles and Weirs To Be Precast Concrete
2. Static Water Depth = 4'-0"
3. Contractor to:
   Supply and Install All Piping & Sampling Tees
   Grout In All Pipes
   Fill With Clean Water Prior To "Start-Up" Of System
   Verify All BLockout Sizes and Locations

INFORMATION NEEDED:
Top Of Separator Elevation: _____
Inlet Pipe Size: _____
Inlet Pipe Elevation: _____
Outlet Pipe Size _____
Outlet Pipe Elevation: _____

BASIC DESIGN INFORMATION:
INFLUENT CHARACTERISTICS:
Oil Specific Gravity: 0.88
Operating Temperature: 50°
Influent Oil Concentration: 100 ppm
Mean Oil Droplet Size: 130 Microns
0.33 ft/min. Rise Rate
Designed Per Washington State Department Of Ecology
100%

FLOW RATE	EFFLUENT QUALITY	COLLECTED SIZE
146 GPM	10 ppm	60 Micron

SCALE: 3/8"=1'-0"

142.1

© 1995-2016 Oldcastle Precast, Inc.

opauburn.com

1 / C5.7 **OLDCASTLE PRECAST 577-CPS**
SCALE: NTS

Refer to civil construction permit PRCCP20231423 for approved oil/water separator design.

OIL/WATER SEPARATOR SIZING CALCULATIONS

Project Name: Arco Puyallup
Site Location: 1402 S Meridian
Municipality: City of Puyallup
Engineer: James Fleharty
Date: 01/12/24
Our Job No.: 21730

Sizing per 2019 DOE Stormwater Management Manual for Western Washington
Section 6.6.2.1, page 6-144

Specific Gravity of Water, S_w =	1.0	
Specific Gravity of Oil, S_o =	0.85	
Absolute Viscosity of Water, μ =	0.015674	
Water Quality Design Flow Rate, Q =	0.0747	CFS
k =	4.35	
Adjusted Water Quality Flow Rate(Q * k)	19.4967	CFM
Required Effective Plate Area of Surface Media, A_o =	527.79	SF

Use OldCastle Precast Oil Water Separator 577-CPS (Plate Area = 592 SF)

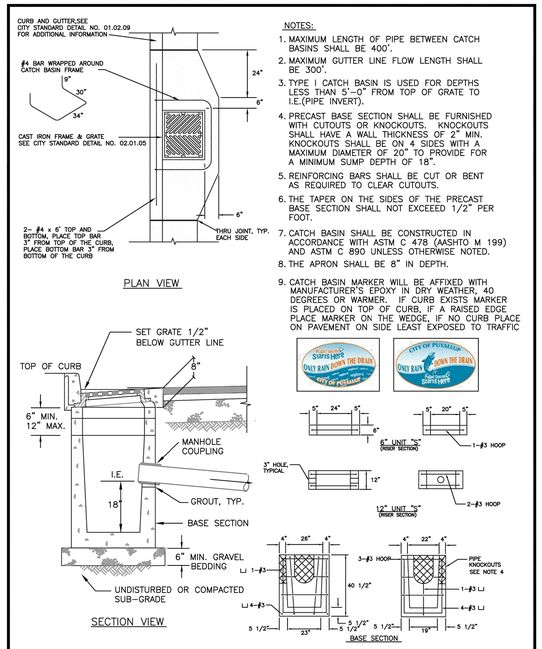

NOTES:
1. MAXIMUM LENGTH OF PIPE BETWEEN CATCH BASINS SHALL BE 400'.
2. MAXIMUM GUTTER LINE FLOW LENGTH SHALL BE 300'.
3. TYPE I CATCH BASIN IS USED FOR DEPTHS LESS THAN 5'-0" FROM TOP OF GRATE TO I.E.(PIPE INVERT).
4. PRECAST BASE SECTION SHALL BE FURNISHED WITH CUTOUTS OR KNOCKOUTS. KNOCKOUTS SHALL HAVE A WALL THICKNESS OF 2" MIN. KNOCKOUTS SHALL BE ON 4 SIDES WITH A MAXIMUM DIAMETER OF 20" TO PROVIDE FOR A MINIMUM SUMP DEPTH OF 18".
5. REINFORCING BARS SHALL BE CUT OR BENT AS REQUIRED TO CLEAR CUTOUTS.
6. THE TAPER ON THE SIDES OF THE PRECAST BASE SECTION SHALL NOT EXCEEED 1/2" PER FOOT.
7. CATCH BASIN SHALL BE CONSTRUCTED IN ACCORDANCE WITH ASTM C 478 (AASHTO M 199) AND ASTM C 890 UNLESS OTHERWISE NOTED.
8. THE APRON SHALL BE 8" IN DEPTH.
9. CATCH BASIN MARKER WILL BE AFFIXED WITH MANUFACTURER'S EPOXY IN DRY WEATHER, 40 DEGREES OR WARMER. IF CURB EXISTS MARKER IS PLACED ON TOP OF CURB, IF A RAISED EDGE PLACE MARKER ON THE WEDGE, IF NO CURB PLACE ON PAVEMENT ON SIDE LEAST EXPOSED TO TRAFFIC

CITY OF PUYALLUP — DEVELOPMENT ENGINEERING and PUBLIC WORKS DEPARTMENTS

CATCH BASIN TYPE 1 (GUTTER DRAIN)

DRAWN BY	CHECKED BY	APPROVED BY	REVISED BY	CITY STANDARD
LINDA LANSING	LINDA LIAN	COLLEEN HARRIS	XXXX	02.01.03
FILE NAME F:\DWG\COMMON\STDS\CITY\200902_SD02.01.03		DATE APPROVED 09/01/1992	DATE REVISED 06/01/2003	SCALE NTS

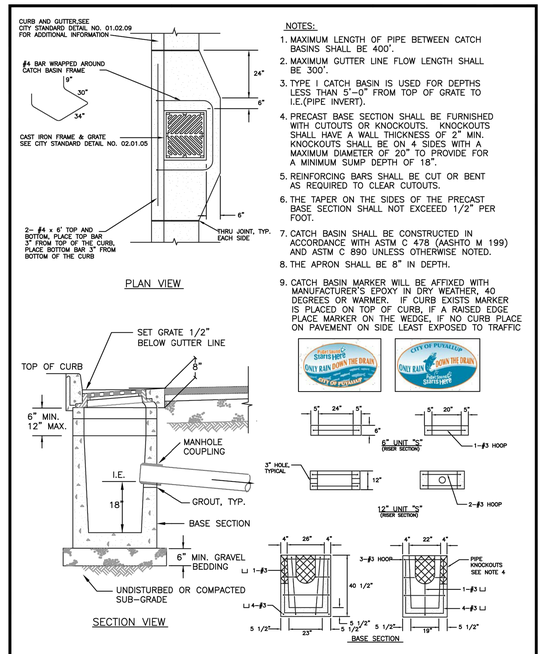

NOTES:
1. MAXIMUM LENGTH OF PIPE BETWEEN CATCH BASINS SHALL BE 400'.
2. MAXIMUM GUTTER LINE FLOW LENGTH SHALL BE 300'.
3. TYPE I CATCH BASIN IS USED FOR DEPTHS LESS THAN 5'-0" FROM TOP OF GRATE TO I.E.(PIPE INVERT).
4. PRECAST BASE SECTION SHALL BE FURNISHED WITH CUTOUTS OR KNOCKOUTS. KNOCKOUTS SHALL HAVE A WALL THICKNESS OF 2" MIN. KNOCKOUTS SHALL BE ON 4 SIDES WITH A MAXIMUM DIAMETER OF 20" TO PROVIDE FOR A MINIMUM SUMP DEPTH OF 18".
5. REINFORCING BARS SHALL BE CUT OR BENT AS REQUIRED TO CLEAR CUTOUTS.
6. THE TAPER ON THE SIDES OF THE PRECAST BASE SECTION SHALL NOT EXCEEED 1/2" PER FOOT.
7. CATCH BASIN SHALL BE CONSTRUCTED IN ACCORDANCE WITH ASTM C 478 (AASHTO M 199) AND ASTM C 890 UNLESS OTHERWISE NOTED.
8. THE APRON SHALL BE 8" IN DEPTH.
9. CATCH BASIN MARKER WILL BE AFFIXED WITH MANUFACTURER'S EPOXY IN DRY WEATHER, 40 DEGREES OR WARMER. IF CURB EXISTS MARKER IS PLACED ON TOP OF CURB, IF A RAISED EDGE PLACE MARKER ON THE WEDGE, IF NO CURB PLACE ON PAVEMENT ON SIDE LEAST EXPOSED TO TRAFFIC

CITY OF PUYALLUP — DEVELOPMENT ENGINEERING and PUBLIC WORKS DEPARTMENTS

CATCH BASIN TYPE 1 (GUTTER DRAIN)

DRAWN BY	CHECKED BY	APPROVED BY	REVISED BY	CITY STANDARD
LINDA LANSING	LINDA LIAN	COLLEEN HARRIS	XXXX	02.01.03
FILE NAME F:\DWG\COMMON\STDS\CITY\200902_SD02.01.03		DATE APPROVED 09/01/1992	DATE REVISED 06/01/2003	SCALE NTS

2 / C5.7 **TYPE 1 CATCH BASIN**
SCALE: NTS

UTILITY CONFLICT NOTE:

THE CONTRACTOR SHALL BE RESPONSIBLE FOR VERIFYING THE LOCATION, DIMENSION, AND DEPTH OF ALL EXISTING UTILITIES WHETHER SHOWN ON THESE PLANS OR NOT BY POTHOLING THE UTILITIES AND SURVEYING THE HORIZONTAL AND VERTICAL LOCATION PRIOR TO CONSTRUCTION. THIS SHALL INCLUDE CALLING UTILITY LOCATE AT 811 48 HOURS IN ADVANCE AND THEN POTHOLING ALL OF THE EXISTING UTILITIES AT LOCATIONS OF NEW UTILITY CROSSINGS TO PHYSICALLY VERIFY WHETHER OR NOT CONFLICTS EXIST. LOCATIONS OF SAID UTILITIES AS SHOWN ON THESE PLANS ARE BASED UPON THE UNVERIFIED PUBLIC INFORMATION AND ARE SUBJECT TO VARIATION. IF CONFLICTS SHOULD OCCUR, THE CONTRACTOR SHALL NOTIFY BARGHAUSEN CONSULTING ENGINEERS, INC. TO RESOLVE ALL PROBLEMS PRIOR TO PROCEEDING WITH CONSTRUCTION.

811 Know what's **below.** **Call** before you dig. Dial 811

APPROVED

BY _____
CITY OF PUYALLUP
DEVELOPMENT ENGINEERING

DATE _____

NOTE: THIS APPROVAL IS VOID AFTER 180 DAYS FROM APPROVAL DATE.
THE CITY WILL NOT BE RESPONSIBLE FOR ERRORS AND/OR OMISSIONS ON THESE PLANS.
FIELD CONDITIONS MAY DICTATE CHANGES TO THESE PLANS AS DETERMINED BY THE DEVELOPMENT ENGINEERING MANAGER.

CLIENT: bp

ARCO
BP WEST COAST PRODUCTS, LLC

Barghausen Consulting Engineers, Inc.
18215 72nd Avenue South
Kent, WA 98032
425.251.6222
barghausen.com

NO.	DATE	REVISION DESCRIPTION
1		
2		
3		
4		
5		
6		
7		
8		
9		
10		
11		
12		

SEAL: ALEX WHITE, STATE OF WASHINGTON, 21096777, REGISTERED PROFESSIONAL ENGINEER — 2/9/24

DEVELOPMENT INFORMATION:
ARCO NTI
3400 am/pm
FUEL CANOPY w/ 6 MPD's

SITE ADDRESS:
1402 S. MERIDIAN
@ HIGHWAY 512
PUYALLUP, WASHINGTON

FACILITY #TBD

DESIGNED BY: JDF	ALLIANCE ZAOM:
CHECKED BY: AW	BP REPM:
DRAWN BY: JDF	ALLIANCE PM:
VERSION: -	PROJECT NO: 21730

DRAWING TITLE: **DRAINAGE DETAILS**

SHEET NO: **C5.7**

P:\21000s\21730\engineering\21730-M.dwg 2/6/2024 4:33 PM JFLEHARTY