1. STRUCTURAL NOTES

1.1. ANY DISCREPANCY FOUND AMONG THE DRAWINGS, SPECIFICATIONS, THESE NOTES, AND THE SITE CONDITIONS SHALL BE REPORTED TO THE ARCHITECT AND THE STRUCTURAL ENGINEER, WHO SHALL CORRECT SUCH DISCREPANCY IN WRITING. ANY WORK DONE BY THE CONTRACTOR AFTER DISCOVERY OF SUCH DISCREPANCY SHALL BE DONE AT THE CONTRACTOR'S RISK. THE CONTRACTOR SHALL VERIFY AND COORDINATE THE DIMENSIONS AMONG ALL DRAWINGS PRIOR TO PROCEEDING WITH ANY WORK OR FABRICATION. THE CONTRACTOR IS RESPONSIBLE FOR ALL ERECTION BRACING, FORMWORK AND TEMPORARY CONSTRUCTION SHORING.

1.2. BY THE ACT OF SUBMITTING A BID FOR THE PROPOSED CONTRACT, THE CONTRACTOR WARRANTS THAT:

1.2.1. THE CONTRACTOR AND ALL SUBCONTRACTORS THEY INTEND TO USE (INCLUDING AGENTS AND SUPPLIERS) HAVE CAREFULLY AND THOROUGHLY REVIEWED THE DRAWINGS AND STRUCTURAL NOTES AND HAVE FOUND THEM COMPLETE AND FREE FROM AMBIGUITIES AND SUFFICIENT FOR THE PURPOSE INTENDED.

1.2.2. THE CONTRACTOR HAS CAREFULLY EXAMINED THE SITE OF THE WORK AND FROM THEIR OWN INVESTIGATIONS, THEY HAVE SATISFIED THEMSELF AS TO THE NATURE AND LOCATION OF THE WORK, AS TO THE CHARACTER, QUALITY, AND QUANTITIES OF MATERIAL AND DIFFICULTIES TO BE ENCOUNTERED, AS TO THE EXTENT OF EQUIPMENT AND OTHER FACILITIES NEEDED FOR THE PERFORMANCE OF THE WORK AND AS TO THE GENERAL AND LOCAL CONDITIONS, AND OTHER ITEMS WHICH MAY IN ANY WAY AFFECT THE WORK OR ITS PERFORMANCE.

1.2.3. THE CONTRACTOR AND ALL WORKERS THEY INTEND TO USE ARE SKILLED AND EXPERIENCED IN THE TYPE OF CONSTRUCTION REPRESENTED BY THE DRAWINGS AND DOCUMENTS BID UPON.

1.2.4. NEITHER THE CONTRACTOR NOR ANY OF THEIR EMPLOYEES, AGENTS, INTENDED SUPPLIERS, OR SUBCONTRACTORS HAVE RELIED UPON ANY VERBAL REPRESENTATIONS ALLEGEDLY AUTHORIZED OR UNAUTHORIZED FROM THE OWNER OR THEIR EMPLOYEES OR AGENTS, INCLUDING THE ARCHITECT OR ENGINEERS, IN ASSEMBLING THE BID FIGURES.

1.2.5. THE REQUIREMENTS CONTAINED WITHIN THIS SECTION SUPERSEDE REQUIREMENTS AND/OR RECOMMENDATIONS CONTAINED IN THE AISC "CODE OF STANDARD PRACTICE FOR STEEL BUILDING AND BRIDGES", AS WELL AS CASE DOCUMENT 962-D "A GUIDELINE ADDRESSING COORDINATION AND COMPLETENESS OF STRUCTURAL CONSTRUCTION DOCUMENTS"

1.2.6. THE CONTRACTOR AND ALL SUBCONTRACTORS THEY INTEND TO USE ARE AWARE OF AND ACKNOWLEDGE THAT CLOSE COORDINATION AMONG ARCHITECTURAL, STRUCTURAL, MECHANICAL, ELECTRICAL AND OTHER TRADE DRAWINGS IS REQUIRED.

1.2.7. THE CONTRACTOR AND ALL SUBCONTRACTORS THEY INTEND TO USE SHALL RECOGNIZE THAT THE PROJECT CONTRACT DOCUMENTS INCLUDE THE ARCHITECTURAL, STRUCTURAL, MECHANICAL AND ELECTRICAL AND OTHER TRADE DRAWINGS AND SPECIFICATIONS

1.2.8. CONTRACTOR AND ALL SUBCONTRACTORS ACKNOWLEDGE THAT CLOSE COORDINATION BETWEEN DISCIPLINES INCLUDED WITHIN THE CONTRACT DOCUMENTS IS NECESSARY. ELEMENTS THAT WILL REQUIRE CLOSE COORDINATION BY THE CONTRACTOR INCLUDE (BUT ARE NOT LIMITED TO):

A. VERIFICATION OF ALL DIMENSIONS INDICATED ON THE ARCHITECTURAL AND STRUCTURAL DRAWINGS
B. DETERMINATION OF ALL COLUMN LOCATIONS
C. DETERMINATION OF TOP OF FLOOR, TOP OF STEEL, WALL PLATE AND/OR TOP OF BEAM ELEVATIONS
D. DETERMINATION OF TOP OF FOOTING ELEVATIONS AND FOOTING STEP LOCATIONS
E. MECHANICAL/ELECTRICAL EQUIPMENT LOCATIONS AND WEIGHTS
F. LOCATION AND SIZE OF ALL MECHANICAL/ ELECTRICAL PENETRATIONS THROUGH WALLS AND FLOORS/ ROOFS
G. COORDINATION WITH DESIGNERS/ SUPPLIERS OF PRE-ENGINEERED COMPONENTS (JOISTS, TRUSSES, STAIRS, ETC.)

1.2.9. THE CONTRACTOR ACKNOWLEDGES THAT TEMPORARY SHORING AND/OR BRACING MAY BE REQUIRED TO COMPLETE THE PROJECT. DESIGN AND IMPLEMENTATION OF TEMPORARY SHORING AND/OR BRACING DURING CONSTRUCTION IS THE SOLE RESPONSIBILITY OF THE CONTRACTOR.

1.2.10. THE CONTRACTOR AND ALL SUBCONTRACTORS THEY INTEND TO USE SHALL MAKE CONSIDERATION FOR, AND INCLUDE MONIES FOR THE ABOVE IN THE PREPARATION OF THEIR BIDS.

1.2.11. THE CONTRACTOR SHALL NOT SCALE THE ARCHITECTURAL AND STRUCTURAL DRAWINGS FOR LOCATIONS OF ELEMENTS NOTED ABOVE.

1.2.12. ELECTRONIC COPIES OF THE STRUCTURAL DRAWINGS (PDF'S, CAD DRAWINGS OR BIM MODELS) MAY BE PROVIDED TO THE CONTRACTOR FOR THEIR USE. THESE FILES MAY BE PROVIDED AT THE REQUEST OF THE CONTRACTOR FOR THEIR CONVENIENCE ONLY. THE CONTRACTOR AGREES THAT THESE FILES SHALL NOT SUPERSEDE INFORMATION SHOWN ON THE ORIGINAL BID/ CONSTRUCTION DOCUMENTS. THE CONTRACTOR AGREES TO HOLD THE STRUCTURAL ENGINEER HARMLESS FOR ANY ERRORS OR DISCREPANCIES CONTAINED WITHIN THESE ELECTRONIC FILES.

1.2.13. THE BID FIGURE IS BASED SOLELY UPON THE CONSTRUCTION CONTRACT DOCUMENTS AND PROPERLY ISSUED WRITTEN OR VERBAL REPRESENTATIONS.

1.3. CODES

1.3.1. ALL METHODS, MATERIALS AND WORKMANSHIP SHALL CONFORM TO THE 2018 INTERNATIONAL BUILDING CODE (IBC) AS AMENDED AND ADOPTED BY THE LOCAL BUILDING AUTHORITY.

1.3.2. ALL REFERENCES TO OTHER CODES, STANDARDS AND SPECIFICATIONS, (ACI, ASTM, ETC.), SHALL BE FOR THE EDITION CURRENTLY REFERENCED BY IBC AS AMENDED AND ADOPTED BY THE LOCAL BUILDING AUTHORITY.

1.4. DESIGN CRITERIA

1.4.1. UNIFORM LOADS:

LOCATION	LIVE LOAD	DEAD LOAD
ROOF SOLAR READINESS ZONE **	25 PSF (SNOW*)	ACTUAL +4 PSF +175 PSF (INVERTER)
RESIDENTIAL (PRIVATE ROOMS AND CORRIDORS)	40 PSF	ACTUAL
RESIDENTIAL (PUBLIC ROOMS ANDCORRIDORS)	100 PSF	ACTUAL
STAIRS AND EXITS	100 PSF	ACTUAL
DECKS AND BALCONIES [1.5X OCCUPANCY SERVED, NOT EXCEEDING 100 PSF]	60 PSF	ACTUAL
MECHANICAL ROOMS	50 PSF	ACTUAL
STORAGE	125 PSF	ACTUAL
PARKING GARAGE (PASSENGER VEHICLES)	40 PSF OR 3000# WHEEL	ACTUAL
HANDRAILS AND GUARDS	50 PLF OR 200# CONCENTRATED LOAD	

* THIS IS NOT A GROUND SNOW LOAD

** SOLAR READINESS ZONE PER WA STATE ENERGY CODE, COMMERCIAL PROVISIONS, CHAPTER 51-11C WAC.

WHERE LIVE LOADS OF COMMERCIAL OR INDUSTRIAL BUILDINGS EXCEED 50 PSF, SUCH DESIGN LOADS SHALL BE POSTED IN THAT PART OF EACH STORY IN WHICH THEY APPLY

1.4.2. SNOW LOADS PER IBC SECTION 1608 AND CHAPTER 7 OF ASCE 7:

GROUND SNOW LOAD (P_g):	25.0 PSF
FLAT ROOF SNOW LOAD (P_f):	25.0 PSF
SNOW EXPOSURE FACTOR (C_e):	1.0
SNOW IMPORTANCE FACTOR (I_s):	1.0
THERMAL FACTOR (C_t):	1.0

1.4.3. CONCENTRATED LOADS: ALL MANUFACTURERS OF PRE-ENGINEERED COMPONENTS OR SYSTEMS SHALL LOCATE, COORDINATE, VERIFY WEIGHTS, ETC., OF MECHANICAL UNITS OR OTHER CONCENTRATED LOADS AND DESIGN THEIR SYSTEM FOR THESE LOADS.

1.4.4. WIND LOADS (PER IBC SECTION 1609 AND ASCE 7 CHAPTERS 26 THRU 30):

BASIC WIND SPEED (V):	98 MPH
RISK CATEGORY	II
WIND EXPOSURE:	B
APPLICABLE INTERNAL PRESSURE COEFFICIENT:	+/-0.18
ENCLOSED STRUCTURE	
TOPOGRAPHIC FACTOR (K_{zt})	1.0

COMPONENTS AND CLADDING: ULTIMATE DESIGN WIND PRESSURES TO BE USED FOR THE DESIGN OF EXTERIOR COMPONENT AND CLADDING MATERIALS IS AS FOLLOWS:

ZONE:1	+16.0/-23.1 PSF (10 SQ FT)
ZONE:2e	+16.0/-31.9 PSF (10 SQ FT)
ZONE:2r	+16.0/-31.9 PSF (10 SQ FT)
ZONE:3	+16.0/-31.9 PSF (10 SQ FT)
ZONE:4	+17.3/-18.7 PSF (10 SQ FT)
ZONE:5	+17.3/-23.1 PSF (10 SQ FT)

1.4.5. SEISMIC LOADS (PER IBC SECTION 1613 AND ASCE 7 CHAPTERS 11 THRU 13):

RISK CATEGORY:	II
SEISMIC IMPORTANCE FACTOR (I_e):	1.00
S_s:	1.257
S_1:	0.434
SITE CLASS:	C
S_{DS}:	1.000
S_{D1}:	0.434
SEISMIC DESIGN CATEGORY:	D
DESIGN BASE SHEAR:	$V = C_s \times W$
SEISMIC RESPONSE COEFFICIENT (C_s):	0.154 (WOOD SW) 0.200 (CONC SW)
ANALYSIS PROCEDURE USED:	TWO STAGE ANALYSIS EPR ASCE 7-16 12.2.3.2 USING EQUIVALENT LATERAL FORCE PROCEDURE

SEISMIC FORCE-RESISTING SYSTEM	RESPONSE MODIFICATION COEFFICIENT, R	OVERSTRENGTH FACTOR, Ω_0
A. BEARING WALL SYSTEMS:		
1. SPECIAL REINFORCED CONCRETE SHEAR WALLS	5	2 ½
15. LIGHT-FRAME (WOOD) WALLS SHEATHED WITH WOOD STRUCTURAL PANELS RATED FOR SHEAR RESISTANCE	6 ½	2 ½

NOTE: TABULATED OVERSTRENGTH FACTOR HAS BEEN REDUCED IN ACCORDANCE WITH ASCE 7 TABLE 12.2-1 FOOTNOTE B FOR STRUCTURES WITH FLEXIBLE DIAPHRAGMS.

1.5. STATEMENT OF SPECIAL INSPECTIONS

SEE STATEMENT OF SPECIAL INSPECTION AND TESTING SHEETS S0.3-B AND S0.4-B.

1.6. SHOP DRAWINGS

1.6.1. SUBMIT SHOP DRAWINGS TO THE ARCHITECT/ENGINEER FOR THE FOLLOWING:

A. CONCRETE MIX DESIGN SUBMITTALS
B. REINFORCING STEEL
C. STRUCTURAL AND MISCELLANEOUS STEEL INCLUDING WELD INSERTS AND ANCHORS
D. GLUED-LAMINATED/PARALLAM/LSL MEMBERS
E. PRE-ENGINEERED WOOD TRUSSES *
F. CONCRETE/MASONRY COORDINATION DRAWINGS
G. CONCRETE POST-TENSIONING SYSTEM
H. CONCRETE STUDRAIL REINFORCING
I. DIMENSIONED PENETRATION DRAWINGS FOR PT SLABS

* DEFERRED SUBMITTALS: PRE-ENGINEERED ITEMS SHALL BE SUBMITTED TO THE BUILDING OFFICIAL AFTER REVIEW BY THE ENGINEER OR RECORD AS A DEFERRED SUBMITTAL.

1.6.2. SHOP DRAWING REVIEW NOTES

A. ENGINEER OF RECORD SHALL REVIEW SHOP DRAWINGS FOR GENERAL CONFORMANCE WITH THE PROJECT CONSTRUCTION DOCUMENTS (PLANS AND SPECIFICATIONS).
B. ENGINEER OF RECORD REVIEW OF SHOP DRAWINGS SHALL NOT RELIEVE THE GENERAL CONTRACTOR OF THEIR RESPONSIBILITY FOR REVIEW OF THE SHOP DRAWINGS FOR COMPLIANCE WITH THE PROJECT REQUIREMENTS.
C. APPROVAL OF THE SHOP DRAWINGS BY THE ENGINEER OF RECORD SHALL NOT BE CONSIDERED AS A GUARANTEE BY THE ENGINEER THAT THE SHOP DRAWINGS COMPLY WITH ALL PROJECT REQUIREMENTS.
D. CONCURRENT SHOP DRAWING REVIEW SHALL ONLY BE PERMITTED IF APPROVED BY THE ARCHITECT/ENGINEER OF RECORD PRIOR TO THE START OF SHOP DRAWING REVIEW.

1.7. MISCELLANEOUS

1.7.1. VERIFY ALL DIMENSIONS AND CONDITIONS IN THE FIELD.

1.7.2. VERIFY SIZE AND LOCATION OF ALL OPENINGS IN THE FLOORS, ROOF AND WALLS WITH ARCHITECTURAL, MECHANICAL AND ELECTRICAL DRAWINGS.

1.7.3. CONSTRUCTION DETAILS NOT SPECIFICALLY SHOWN ON THE DRAWINGS SHALL FOLLOW SIMILAR DETAILS OF SECTIONS OF THIS PROJECT AS APPROVED BY THE ARCHITECT/ ENGINEER.

1.7.4. SEE ARCHITECTURAL, MECHANICAL AND ELECTRICAL DRAWINGS FOR DIMENSIONS AND LOCATIONS OF OPENINGS NOT DIMENSIONED OR SHOWN ON STRUCTURAL PLANS.

1.7.5. SEE ARCHITECTURAL, MECHANICAL AND ELECTRICAL DRAWINGS FOR LOCATIONS AND WEIGHTS OF ALL MECHANICAL AND ELECTRICAL EQUIPMENT INCLUDING HOUSEKEEPING PADS.

1.7.6. FOR PIPES, CONDUITS, DUCTS AND MECHANICAL EQUIPMENT SUPPORTED OR BRACED FROM STRUCTURE: CONFORM TO SHEET METAL AND AIR CONDITIONING CONTRACTORS NATIONAL ASSOCIATION, INC., PUBLICATION "APPENDIX E: SEISMIC RESTRAINT MANUAL GUIDELINES FOR MECHANICAL SYSTEMS." ALL BRACING AND SUPPORTS SHALL BE DESIGNED FOR SEISMIC HAZARD LEVEL (SHL) B. SPRINKLER LINE ATTACHMENTS SHALL CONFORM TO NFPA PAMPHLET 13.

1.7.7. THE STRUCTURE HAS BEEN DESIGNED TO RESIST CODE REQUIRED VERTICAL AND LATERAL FORCES AFTER THE CONSTRUCTION OF ALL STRUCTURAL ELEMENTS HAS BEEN COMPLETED. STABILITY OF THE STRUCTURE PRIOR TO COMPLETION IS THE SOLE RESPONSIBILITY OF THE GENERAL CONTRACTOR. THIS RESPONSIBILITY INCLUDES BUT IS NOT LIMITED TO JOB SITE SAFETY; ERECTION MEANS, METHODS, AND SEQUENCES; TEMPORARY SHORING, FORMWORK, AND BRACING; USE OF EQUIPMENT AND CONSTRUCTION PROCEDURES.

2. SITE PREPARATION/SOIL REMEDIATION

2.1. SOIL DATA

ALLOWABLE SOIL PRESSURE 3,000 PSF. ALLOW 33-1/3% INCREASE FOR LOADS FROM WIND OR SEISMIC ORIGIN. SEE GEOTECHNICAL ENGINEERING REPORT BY TERRA ASSOCIATES, INC. DATED NOVEMBER 14, 2016. SEE GEOTECH REPORT FOR ALL SUBGRADE PREPARATION REQUIREMENTS AS WELL AS CAPILLARY BREAK AND VAPOR BARRIER RECOMMENDATIONS.

2.1.1. RETAINING WALL DESIGN CRITERIA:

A. ACTIVE EARTH PRESSURE:	35 PCF
B. AT-REST EARTH PRESSURE:	100 PSF (UNIFORM)
C. SEISMIC EARTH PRESSURE:	8 x "H" PSF
D. PASSIVE EARTH PRESSURE:	350 PCF *
E. FRICTION COEFFICIENT:	0.35 *

* INCLUDES FACTOR OF SAFETY OF 1.5

2.2. EXCAVATION

EXCAVATE TO DEPTH SHOWN AND TO FIRM UNDISTURBED MATERIAL. OVER-EXCAVATIONS SHALL BE BACKFILLED WITH LEAN CONCRETE (f'_c=500-1200 PSI) OR STRUCTURAL FILL AT THE CONTRACTOR'S EXPENSE. EXERCISE EXTREME CARE DURING EXCAVATION TO AVOID DAMAGE TO BURIED LINES, TANKS, AND OTHER CONCEALED ITEMS. UPON DISCOVERY, DO NOT PROCEED WITH WORK UNTIL RECEIVING WRITTEN INSTRUCTIONS FROM THE ARCHITECT. A COMPETENT REPRESENTATIVE OF THE OWNER SHALL INSPECT ALL FOOTING EXCAVATIONS FOR SUITABILITY OF BEARING SURFACES PRIOR TO PLACEMENT OF REINFORCING STEEL. PROVIDE DRAINAGE AS NECESSARY TO AVOID WATER-SOFTENED SUBGRADE.

2.3. FILL, BACKFILL AND COMPACTION

BACKFILL AGAINST WALLS SHALL NOT BE PLACED UNTIL AFTER THE REMOVAL OF ALL MATERIAL SUBJECT TO ROT OR CORROSION. ALL FILL PLACED AGAINST RETAINING WALLS OR BASEMENT WALLS SHALL BE FREE DRAINING GRANULAR MATERIAL. STRUCTURAL FILL OTHER THAN PEA GRAVEL SHALL BE GRANULAR PLACED IN 6-INCH LIFTS AND COMPACTED TO AT LEAST 95% OF ITS MAXIMUM DRY DENSITY AS DETERMINED BY ASTM D1557 (MOD PROCTOR). PEA GRAVEL FILL SHALL HAVE A MAXIMUM PARTICLE SIZE OF 3/8" DIAMETER.

3. STRUCTURAL CONCRETE

3.1. GENERAL

ALL CONCRETE SHALL BE HARD ROCK CONCRETE MEETING THE REQUIREMENTS OF ACI-301, "SPECIFICATIONS FOR STRUCTURAL CONCRETE FOR BUILDINGS." PROPORTIONING OF INGREDIENTS FOR EACH CONCRETE MIX SHALL BE BY METHOD 2 OR THE ALTERNATE PROCEDURE GIVEN IN ACI-301. PLACE CONCRETE PER ACI-304 AND CONFORM TO ACI-604 (306) FOR WINTER CONCRETING AND ACI-605 (305) FOR HOT WEATHER CONCRETING. USE INTERIOR MECHANICAL VIBRATORS WITH 7,000 RPM MINIMUM FREQUENCY. DO NOT OVER-VIBRATE. CONCRETE SHALL BE PLACED MONOLITHICALLY BETWEEN CONSTRUCTION OR CONTROL JOINTS. PROTECT ALL CONCRETE FROM PREMATURE DRYING, EXCESSIVE HOT OR COLD TEMPERATURE FOR SEVEN DAYS AFTER PLACING.

3.2. STRENGTH

TWENTY-EIGHT DAY COMPRESSIVE STRENGTHS (f'_c) SHALL BE AS FOLLOWS WITH EXPOSURE CATEGORY AND CLASS PER ACI TABLE 19.3.1.1 GIVEN IN PARENTHESIS:

SLABS ON GRADE (F0/S0/W0/C0)	4000 PSI
NON-STRUCTURAL TOPPING SLABS (F0/S0/W0/C0)	3000 PSI
FOOTINGS (F0/S0/W0/C1)	3000 PSI
CONCRETE COLUMNS (F0/S0/W0/C0)	4000 PSI
VERTICALLY FORMED WALLS (F1/S0/W0/C0)	4000 PSI *
ALL POST-TENSIONED ELEMENTS (F0/S0/W0/C0)	5000 PSI

* MAXIMUM W/C RATIO SHALL BE 0.55

CONCRETE SUPPLIER TO PROVIDE TEST RECORDS PER SECTION 26.4 OF ACI 318. WHEN NO PRIOR EXPERIENCE OR TRIAL MIXTURE DATA ARE AVAILABLE, THE WATER/CEMENT RATIO FROM THE TABLE BELOW MAY BE USED, BUT ONLY WHEN SPECIAL PERMISSION IS GIVEN BY ENGINEER.

MAXIMUM ABSOLUTE WATER/CEMENT RATIO BY WEIGHT FOR CONCRETE MIXES WITHOUT TEST RECORDS SHALL BE AS FOLLOWS:

SPECIFIED COMPRESSIVE STRENGTH	NON-AIR ENTRAINED CONCRETE	AIR-ENTRAINED CONCRETE
3000 PSI	0.58	0.46
4000 PSI	0.44	0.35

3.3. MATERIALS

3.3.1. CEMENT: ASTM C150, TYPE I OR TYPE II. ENGINEER'S APPROVAL IS NEEDED FOR USE OF TYPE III CEMENT.

3.3.2. COARSE AND FINE AGGREGATE: ASTM C33.

3.3.3. WATER SHALL BE CLEAN AND POTABLE.

3.3.4. FLYASH: ASTM C618 CLASS C (CLASS F MAY BE ALLOWED IF APPROVED BY THE STRUCTURAL ENGINEER)

3.3.5. GROUND GRANULATED BLAST FURNACE SLAG (GGBFS): ASTM C989 GRADE 100 OR 120. GGBFS SHALL NOT BE PERMITTED UNLESS REVIEWED AND APPROVED BY THE STRUCTURAL ENGINEER. MIX DESIGNS SUBMITTED INCLUDING GGBFS SHALL INCLUDE SHRINKAGE TEST RESULTS AT 28 DAYS.

3.4. ADMIXTURES

3.4.1. WATER REDUCING ADMIXTURE: ASTM C494. ADMIXTURES SHALL BE USED IN EXACT ACCORDANCE WITH MANUFACTURER'S INSTRUCTIONS.

3.4.2. WATER REDUCING ADMIXTURES SHALL BE USED AT ALL HEAVILY CONGESTED AREAS (I.E. CONCRETE BEAMS, COLUMNS AND WALLS WITH REINFORCING SPACING OF 4" OR LESS)

3.4.3. CONCRETE USING ADMIXTURES TO PRODUCE FLOWABLE CONCRETE MAY BE USED SUBJECT TO ENGINEER'S APPROVAL.

3.4.4. AIR ENTRAINMENT: ASTM C260 AND ASTM C494 ENTRAIN 5% PLUS/MINUS 1.5% BY VOLUME IN ALL CONCRETE EXPOSED TO WEATHER.

3.4.5. NO OTHER ADMIXTURES PERMITTED UNLESS APPROVED BY THE ENGINEER.

3.5. POST TENSIONED CONCRETE MIX DESIGN

3.5.1. CONCRETE SHALL OBTAIN A MINIMUM COMPRESSIVE STRENGTH OF 3000 PSI PRIOR TO STRESSING TENDONS.

3.5.2. A MINIMUM OF 15% OF REQUIRED CEMENTITIOUS MATERIAL SHALL BE FLYASH.

3.5.3. W/C RATIO SHALL NOT EXCEED 0.38 UNLESS TEST RECORDS ARE PROVIDED THAT DEMONSTRATE SHRINKAGE DOES NOT EXCEED 0.042% AT 28 DAYS (LABORATORY CONDITIONS).

3.5.4. PROVIDE CONCRETE MIX DESIGN AND REQUIRED TEST REPORTS FOR APPROVAL BY ENGINEER OF RECORD MINIMUM TWO WEEKS PRIOR TO PLACING ANY POST TENSIONED CONCRETE.

3.6. POST-TENSIONED CIP CONCRETE

3.6.1. TENDON QUALITY: TENDONS SHALL BE COMPRISED OF SEVEN-WIRE STRAND CONFORMING TO ASTM A416 WITH A MINIMUM ULTIMATE TENSILE STRENGTH OF 270 KSI. WIRE SHALL BE STRESS RELIEVED, LOW RELAXATION, UNCOATED, CLEAN, AND FREE OF CORROSION. STRAND DIAMETER HAS BEEN ASSUMED TO BE 0.5 IN. IF 0.60 IN. IS USED, SUBMIT CALCULATIONS FOR APPROVAL WITH SHOP DRAWINGS. ONLY ONE STRAND SIZE WILL BE USED THROUGHOUT THE JOB.

1/2" DIA TENDON AREA:	0.153 SQ IN
ULTIMATE STRENGTH:	270 KSI
MIN JACKING STRESS:	216 KSI

3.6.2. MULTI-STRAND TENDONS IN BEAMS: PROVIDE THE MINIMUM NUMBER OF 1/2" DIAMETER STRANDS NOTED. STRESS TO ACHIEVE INDICATED FORCE. SUBMIT FRICTION AND LOSS CALCULATION PRIOR TO PREPARATION OF SHOP DRAWINGS.

3.6.3. TENDON ANCHORS: ANCHORAGES PROVIDED MUST BE LIMITED TO THOSE WITH A MAXIMUM SEATING LOSS OF 1/4 IN., SUCH AS MANUFACTURED BY GENERAL TECHNOLOGIES, INC. (GTI) OR APPROVED EQUIVALENT. TENDON ANCHORS SHALL BE RECESSED MIN 2". TWO #4 CONTINUOUS BARS SHALL BE PLACED BEHIND ALL ANCHORS UNLESS NOTED OTHERWISE ON THE DRAWINGS. AFTER STRESSING, ANCHORS SHALL BE CLEANED AND GREASE CAPS TIGHTLY INSTALLED BEFORE FILLING ALL POCKETS WITH NON-SHRINK GROUT.

3.6.4. UNBONDED TENDONS: TENDONS SHALL BE ENCASED IN 40 MIL SLIPPAGE SHEATHING WHICH SHALL CONSIST OF A DURABLE WATERPROOF POLYETHYLENE TUBING CAPABLE OF PREVENTING THE PENETRATION OF CEMENT PASTE AND SHALL CONTAIN A RUST-INHIBITING GREASE COATING. ALL TEARS IN SHEATHING SHALL BE REPAIRED PRIOR TO CONCRETE PLACEMENT. THE FOLLOWING FRICTION AND WOBBLE COEFFICIENTS WERE ASSUMED IN THE DESIGN OF ALL POST TENSIONED ELEMENTS:

μ = 0.07/RAD   K = 0.0014/FT

3.6.5. BONDED TENDONS: DUCT-FORMING MATERIAL FOR GROUTED MULTI-STRAND TENDONS SHALL BE STRONG ENOUGH TO RETAIN ITS SHAPE AND RESIST DAMAGE DURING CONSTRUCTION. IT SHALL PREVENT THE ENTRANCE OF CEMENT PASTE AND WATER FROM THE CONCRETE INTO THE DUCT. THE DUCT SHALL BE VENTED AS REQUIRED TO ENSURE THAT NO VOIDS ARE PRESENT AFTER GROUTING. THE FOLLOWING FRICTION AND WOBBLE COEFFICIENTS WERE ASSUMED IN THE DESIGN OF ALL POST TENSIONED ELEMENTS:

μ = 0.20/RAD   K = 0.002/FT

3.6.6. ALL GROUTED TENDONS SHALL BE PRESSURE-GROUTED IMMEDIATELY AFTER ACCEPTANCE OF TENSIONING. GROUT FOR TENDON SHALL CONSIST OF A MIXTURE OF CEMENT AND WATER.

3.6.7. TENDON ALIGNMENT: IT SHALL BE THE CONTRACTOR'S RESPONSIBILITY TO MAINTAIN THE ALIGNMENT OF THE TENDONS BEFORE, DURING, AND AFTER CONCRETE PLACEMENT.

A. TENDON ADJUSTMENTS: SLIGHT DEVIATIONS IN THE SPACING OF THE SLAB TENDONS WILL BE PERMITTED WHEN REQUIRED TO AVOID OPENINGS, INSERTS, AND DOWELS WHICH ARE SPECIFICALLY LOCATED. WHERE LOCATIONS OF TENDONS SEEM TO INTERFERE WITH EACH OTHER, ONE TENDON MAY BE MOVED HORIZONTALLY IN ORDER TO AVOID THE INTERFERENCE. VERTICAL MOVEMENT OF TENDONS SHALL NOT BE PERMITTED WITHOUT THE ENGINEER'S APPROVAL.
B. PUMPED CONCRETE: IF CONCRETE IS PLACED BY THE PUMP METHOD, HORSES SHALL BE PROVIDED TO SUPPORT THE HOSE. THE HOSE SHALL NOT BE ALLOWED TO RIDE ON THE TENDONS. NO EXCEPTIONS TO THIS REQUIREMENT WILL BE GRANTED.
C. TENDON LAYOUT: A MINIMUM OF TWO TENDONS SHALL BE PROVIDED IN EACH DIRECTION OVER COLUMNS. TENDONS SHALL BE SWEPT FROM THE TYPICAL LAYOUT AS REQUIRED TO MEET THIS REQUIREMENT.

3.6.8. SHOP DRAWINGS:

A. COMPLETE SHOP DRAWINGS OF THE POST-TENSIONING SYSTEM SHALL BE SUBMITTED FOR APPROVAL TO THE ENGINEER AND REVISED PRIOR TO INSTALLING THE POST-TENSIONING SYSTEM. SHOP DRAWINGS SHALL CLEARLY SHOW TENDON LAYOUT, DEAD END AND STRESSING END LOCATIONS, AND TENDON SUPPORT LAYOUTS WITH DETAILS NECESSARY FOR INSTALLATION.
B. PENETRATION/COORDINATION SHOP DRAWINGS SHALL BE PREPARED FOR PT SLABS AND SUBMITTED CONCURRENT WITH SHOP DRAWINGS FOR PT SYSTEM. SHOP DRAWINGS SHALL INDICATE PENETRATION SIZE AND LOCATION AND SHALL BE SUBMITTED FOR APPROVAL TO THE ENGINEER.

3.6.9. THE DRAWINGS SHOW THE GTI ZERO VOID SYSTEM. OTHER TENSIONING SYSTEMS SATISFYING THE LIMITATIONS OF FINAL FORCE, GEOMETRY, TENDON SPACING AND PROFILE, AND END DETAILS MAY BE SUBMITTED FOR APPROVAL.

3.6.10. STRESSING SEQUENCE: STRESS THE FLOOR SYSTEM IN THE FOLLOWING SEQUENCE:

SLAB:	FIRST
BEAMS:	SECOND
GIRDERS:	THIRD

3.6.11. TENDON STRESSING: TENSIONING SHALL NOT COMMENCE UNTIL CONCRETE COMPRESSIVE STRESS HAS REACHED THE SPECIFIED MIN. COMPRESSIVE STRESS NOTED ABOVE. TENSIONING SHALL BE DONE WITH A JOINTLY CALIBRATED RAM AND GAGE UNDER IMMEDIATE CONTROL OF A PERSON EXPERIENCED A MINIMUM OF 5 YEARS IN THIS TYPE OF WORK. CONTINUOUS INSPECTION AND RECORDING OF ELONGATION IS REQUIRED DURING ALL STRESSING OPERATIONS. RECORDS SHALL BE KEPT OF ALL JACKING FORCES AND TENDON ELONGATIONS. DATA SHALL BE SUBMITTED DAILY TO THE ENGINEER OF RECORD. IF ACTUAL ELONGATIONS AND CALCULATED ELONGATIONS ARE NOT IN AGREEMENT WITHIN - 5% OR +7%, THE ENGINEER AND PT SUPPLIER SHALL BE NOTIFIED PRIOR TO BURNING OFF TENDON TAIL OR GROUTING.

3.6.12. POST TENSIONED SLAB OWNER MAINTENANCE PROVISIONS: MEASURES HAVE BEEN TAKEN TO MINIMIZE THE AMOUNT OF SLAB CRACKING. HOWEVER, SOME CRACKING DUE TO THERMAL OR SHRINKAGE SHORTENING SHOULD BE ANTICIPATED. THESE CRACKS ARE NORMALLY NOT STRUCTURALLY SIGNIFICANT, HOWEVER CRACKS LARGER THAN 0.005 INCHES SHOULD BE REPAIRED. IT IS RECOMMENDED THAT TWO YEARS AFTER CONSTRUCTION, THE SLAB BE INSPECTED FOR CRACKING, AND ANY SIGNIFICANT CRACKS BE REPAIRED. FUNDS SHOULD BE SET ASIDE BY THE OWNER FOR REPAIR AND CAN BE ESTIMATED AT 9 CENTS PER SQUARE FOOT OF SLAB SURFACE.

3.7. POST-TENSIONED CONCRETE CONSTRUCTION LOADS, SHORING, RESHORING FOR POST-TENSIONED CIP CONCRETE

3.7.1. THE CONTRACTOR'S SEQUENCE OF CONSTRUCTION AND DESIGN OF SHORING AND FORMWORK SHALL BE SUBMITTED TO THE ENGINEER FOR REVIEW PRIOR TO CONSTRUCTION. INCLUDE CALCULATIONS SHOWING THAT THE SLABS, BEAMS AND GIRDERS WILL NOT BE OVER STRESSED BY FORKLIFTS OR OTHER CONSTRUCTION EQUIPMENT.

3.7.2. CONCRETE FLOOR AND ROOF CONSTRUCTION WITHOUT POST-TENSIONING SHALL BE SUPPORTED BY SHORES OR RESHORES FOR 28 DAYS OR UNTIL THE SPECIFIED DESIGN STRENGTH HAS BEEN ATTAINED.

3.7.3. POST-TENSIONED FLOORS MAY BE DESHORED AFTER POST TENSIONING IS COMPLETE EXCEPT FOR BAYS WITH POUR STRIPS. BAYS WITH POUR STRIPS SHALL REMAIN SHORED UNTIL POUR STRIPS REACH MINIMUM SPECIFIED COMPRESSIVE STRENGTH.

3.7.4. POST-TENSIONED FLOORS MUST BE RESHORED TO SUPPORT THE WEIGHT OF CONSTRUCTION ABOVE. RESHORING SHALL REMAIN IN PLACE UNTIL THE FLOOR BEAMS AND SLAB AT THE LEVELS ABOVE HAVE BEEN STRESSED.

3.7.5. SHORES OR RESHORES AND THEIR SUPPORTS SHALL BE ADEQUATE TO TRANSMIT THE WEIGHT OF ALL CONSTRUCTION IN AN UNYIELDING MANNER TO THE GROUND OR APPROPRIATE NUMBER OF LEVELS BELOW WITHOUT DISTRESS TO THE STRUCTURE.

3.8. POST-TENSIONED CONCRETE: CONSTRUCTION PHASING

3.8.1. CONCRETE FLOORS SHALL BE CAST IN SEGMENTS, SEPARATED BY CLOSURE STRIPS AS INDICATED ON THE DRAWINGS. POURS OF CLOSURE STRIPS SHALL BE MADE AS LATE AS POSSIBLE IN THE CONSTRUCTION PROCESS THEREBY MAXIMIZING THE OPPORTUNITY FOR LONG-TERM VOLUME CHANGES IN THE CONCRETE TO TAKE PLACE. CASTING OF CLOSURE POURS SHALL PROCEED IN THE SAME SEQUENCE AS THE CONSTRUCTION OF THE FLOORS. CLOSURE POURS TO REMAIN OPEN FOR A MINIMUM DURATION OF 60 DAYS UNLESS NOTED OTHERWISE ON THE DRAWINGS. DO NOT INSTALL CAST-IN-PLACE CONCRETE STAIRS OR INFILL WALLS AT ANY LEVEL UNTIL CLOSURE POURS AT THAT LEVEL ARE CAST.

3.8.2. CONCRETE FOR COLUMNS SHALL BE PLACED AT LEAST TWO HOURS BEFORE SLAB CONCRETE IS PLACED.

3.9. FORMWORK AND SHORING

3.9.1. FOLLOW RECOMMENDED PRACTICE FOR CONCRETE FORMWORK (ACI-347).

3.9.2. WHILE RESHORING OPERATIONS ARE UNDERWAY, NO CONSTRUCTION LOADS WILL BE PERMITTED ON THE NEW CONSTRUCTION.

3.9.3. ALL SHORING SHALL BE THE RESPONSIBILITY OF THE CONTRACTOR. FORMWORK SUPPORTS AND SHORING SHALL BE DESIGNED TO PROVIDE FINISHED CONCRETE SURFACES AT ALL FACES LEVEL, PLUMB AND TRUE TO THE DIMENSIONS AND ELEVATIONS SHOWN. TOLERANCES AND VARIATIONS SHALL BE AS SPECIFIED.

3.10. REINFORCING STEEL:

3.10.1. DETAIL, FABRICATE, AND PLACE PER ACI-315 AND ACI-318. SUPPORT REINFORCEMENT WITH APPROVED CHAIRS, SPACERS, OR TIES.

3.10.2. DEFORMED BAR REINFORCEMENT: ASTM A615 GR 60

3.10.3. WELDABLE DEFORMED BAR REINFORCEMENT: ASTM A706 GR 60 WHERE NOTED ON STRUCTURAL DRAWINGS

3.10.4. LONGITUDINAL (VERTICAL) REINFORCEMENT RESISTING SEISMIC MOMENT AND/OR AXIAL FORCES IN SPECIAL MOMENT FRAMES, SPECIAL STRUCTURAL WALLS INCLUDING BOUNDARY ELEMENTS, COUPLING BEAMS AND WALL PIERS SHALL BE ASTM A706 GR 60. ASTM A615 GR 60 MAY BE USED IF:

A. THE ACTUAL YIELD STRENGTH BASED ON MILL TESTS DOES NOT EXCEED THE SPECIFIED YIELD BY MORE THAN 18 KSI; AND
B. THE RATIO OF THE ACTUAL ULTIMATE TENSILE STRENGTH TO THE ACTUAL YIELD STRENGTH IS NOT LESS THAN 1.25; AND
C. MINIMUM ELONGATION IN 8-INCH SHALL BE AT LEAST 14% FOR #3 THRU #6 BARS, AT LEAST 12% FOR #7 THRU #11 BARS, AND AT LEAST 10% FOR #14 THRU #18.

3.10.5. WELDED WIRE FABRIC: ASTM 1064 GR 65

3.10.6. DEFORMED BAR ANCHORS: ASTM A496

3.10.7. HEADED SHEAR STUD REINFORCEMENT: ASTM A1044

3.10.8. PRE-STRESSED TENDONS: SEE POST TENSIONED CIP CONCRETE SECTION OF THESE NOTES FOR REQUIREMENTS.

3.10.9. EXCEPT AS NOTED SPECIFICALLY ON THE DRAWINGS, ALL CONCRETE REINFORCEMENT SHALL BE LAP-SPLICED AS INDICATED ON THE REINFORCING BAR DEVELOPMENT AND SPLICE LENGTH SCHEDULE PROVIDED ON THE STRUCTURAL DRAWINGS. NO MORE THAN 50% OF HORIZONTAL OR VERTICAL REINFORCING BARS SHALL BE SPLICED AT ANY ONE LOCATION.

3.10.10. EXCEPT AS NOTED SPECIFICALLY ON THE DRAWINGS, PROVIDE CORNER BARS TO MATCH QUANTITY AND DIAMETER OF HORIZONTAL REINFORCEMENT AND LAP WITH SPECIFIED HORIZONTAL REINFORCEMENT FOR "L_d" PER REINFORCING BAR DEVELOPMENT AND SPLICE LENGTH TABLES PROVIDED ON THE STRUCTURAL DRAWINGS. THESE CORNER BARS SHALL BE PLACED AT ALL CORNERS AND INTERSECTIONS IN CONCRETE FOOTINGS AND WALLS.

3.10.11. LAP WELDED WIRE FABRIC 12" OR ONE SPACING PLUS 2", WHICHEVER IS MORE.

3.11. CONCRETE COVER ON REINFORCING SHALL BE AS FOLLOWS (UNLESS SHOWN OTHERWISE):

BOTTOM OF FOOTINGS	3"
FORMED EARTH FACE AND SLAB ON GRADE	2"
WALLS, WEATHER FACE	1-1/2"
WALLS, INSIDE FACE	1"
COLUMNS TO TIES	1-1/2"
BEAMS TO STIRRUPS	1-1/2"
BOTTOM OF ELEVATED STRUCTURAL SLAB	3/4"

3.12. CONSTRUCTION OR CONTROL JOINTS

3.12.1. UNLESS NOTED OTHERWISE, LOCATION OF THE CONSTRUCTION OR CONTROL JOINTS IN SLAB ON GRADE SHALL NOT EXCEED THE DISTANCES NOTED BELOW. JOINTS SHALL BE LOCATED ON COLUMN GRIDS OR UNDER PERMANENT PARTITIONS TO THE GREATEST EXTENT POSSIBLE. ADDITIONAL JOINTS SHALL BE REQUIRED AT REENTRANT CORNERS AND CORNERS OF SLAB DEPRESSIONS OR PENETRATIONS. SEE ARCHITECTURAL DRAWINGS FOR JOINT LAYOUT AT EXPOSED CONCRETE CONDITIONS. PROVIDE JOINT SEALANT PER SPECIFICATIONS - INSTALL PER MANUFACTURER RECOMMENDATIONS.

4" SLAB ON GRADE   12'-0" OC

3.12.2. CONSTRUCTION OR CONTROL JOINT SPACING IN WALLS SHALL NOT EXCEED 50' ON CENTER EXCEPT AS DIRECTED BY THE ARCHITECT/ENGINEER.

3.12.3. HORIZONTAL CONSTRUCTION JOINTS IN BEAMS AND GIRDERS SHALL NOT BE PERMITTED EXCEPT WHERE INDICATED ON STRUCTURAL DRAWINGS. VERTICAL CONSTRUCTION JOINTS IN BEAMS AND SLABS SHALL BE LOCATED BETWEEN THE MIDPOINT AND THE THIRD POINT OF THE SPAN.

3.12.4. PROVIDE CONSTRUCTION OR CONTROL JOINTS IN NON-STRUCTURAL TOPPING SLABS AT 10'-0" OC EACH WAY, MAXIMUM.

3.13. CONDUIT AND PIPING EMBEDDED IN CONCRETE

3.13.1. ELECTRICAL CONDUIT SHALL NOT BE PLACED WITHIN A SLAB ON GRADE BUT PLACED BELOW THE SLAB IN THE SUB-BASE.

3.13.2. NO JOISTS, BEAMS OR GIRDERS SHALL BE SLEEVED FOR PIPING OR CONDUIT EXCEPT AS NOTED ON THE STRUCTURAL DRAWINGS OR AS APPROVED BY THE ARCHITECT/ENGINEER.

3/1/2024 7:20:13 PM

in site
architects
1000 university ave. w. suite 130
st. paul, minnesota 55104
612-252-4820

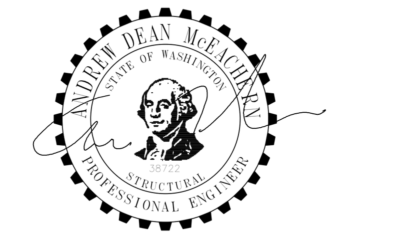

NOTICE:
ALTERATION OF THIS DOCUMENT SHALL INVALIDATE THE PROFESSIONAL SEAL AND SIGNATURE. PUBLICATION OF THIS DOCUMENT DOES NOT DEROGATE FROM RESERVED OWNERSHIP RIGHTS IN IT. THIS DOCUMENT IS FOR USE ONLY FOR THE PROJECT IDENTIFIED IN THE TITLE BLOCK AND IS NOT TO BE USED FOR REPAIR, REMODEL OR ADDITION TO THAT PROJECT OR FOR ANY OTHER PROJECT.

WESLEY BRADLEY PARK 2
EAST BROWNSTONE
707 39TH AVENUE SE
PUYALLUP, WA 98374

PERMIT
RESUBMITTAL
03/01/2024

ORIGINAL ISSUE: 08/17/16

REVISIONS

No.	Description	Date

2220236.20
PROJECT NUMBER

KJK — DRAWN BY
ADM — CHECKED BY

WESLEY BRADLEY PARK 2
EAST BROWNSTONE

AHBL
TACOMA SEATTLE SPOKANE TRI-CITIES
2215 North 30th Street, Suite 300, Tacoma,WA 98403
253.383.2422 TEL 253.383.2572 FAX www.ahbl.com WEB

STRUCTURAL NOTES

S0.1-B

3.13.3. ELECTRICAL CONDUIT AND PIPES EMBEDDED WITHIN THE POST TENSIONED SLAB SHALL SATISFY THE FOLLOWING REQUIREMENTS:

A. CONDUIT AND PIPES SHALL NOT BE LARGER THAN ONE THIRD THE OVERALL THICKNESS OF THE SLAB IN WHICH THEY ARE EMBEDDED.

B. CONDUIT AND PIPES SHALL NOT BE SPACED CLOSER THAN THREE DIAMETERS OR WIDTHS ON CENTER. AT ELECTRICAL ROOMS OR CONGESTED AREAS WHERE MINIMUM SPACING CANNOT BE ACHIEVED, PROVIDE ADDITIONAL #5 REINFORCEMENT AT 12" OC EACH WAY EXTENDING A MINIMUM OF TWO FEET BEYOND CONGESTION. MORE THAN ONE LAYER OF CONDUIT IS NOT PERMITTED UNLESS APPROVED BY THE ENGINEER OF RECORD.

C. CONDUIT AND PIPES SHALL NOT BE PLACED WITHIN 2'-0" OF A COLUMN CAP, WITHIN 1'-6" OF A TENDON ANCHOR, OR WITHIN 2" OF A TENDON.

D. CONDUIT AND PIPES SHALL NOT BE RUSTING OR HAVE OTHER DETERIORATION.

E. CONDUIT AND PIPES SHALL BE UNCOATED OR GALVANIZED IRON OR STEEL, NOT THINNER THAN STANDARD SCHEDULE 40 STEEL PIPE.

3.14. GROUT FOR BEARING PLATES

THE NON-SHRINK GROUT SHALL MEET ASTM C1107 GRADE B OR EQUIVALENT (MASTERFLOW 928 BY BASF OR APPROVED EQUIVALENT). GROUT SHALL BE A PRE-PACKAGED HYDRAULIC CEMENT BASED MINERAL AGGREGATE GROUT, MIXED, PLACED AND CURED AS RECOMMENDED BY THE MANUFACTURER. COMPRESSIVE STRENGTH SHALL EXCEED 6000 PSI AT 28 DAYS.

3.15. SHOTCRETE

3.15.1. SHOTCRETE SHALL BE DEFINED AS MORTAR OR CONCRETE PNEUMATICALLY PROJECTED AT HIGH VELOCITY ONTO A SURFACE. EXCEPT AS SPECIFIED IN THIS SECTION, SHOTCRETE SHALL CONFORM TO THE REQUIREMENTS FOR PLAIN CONCRETE OR REINFORCED CONCRETE.

3.15.2. PROPORTIONS AND MATERIALS: SHOTCRETE PROPORTIONS SHALL BE SELECTED THAT ALLOW SUITABLE PLACEMENT PROCEDURES USING THE DELIVERY EQUIPMENT SELECTED AND SHALL RESULT IN FINISHED IN-PLACE HARDENED SHOTCRETE MEETING THE SPECIFIED STRENGTH REQUIREMENTS.

3.15.3. AGGREGATE: COARSE AGGREGATE, IF USED, SHALL NOT EXCEED 3/4 INCH.

3.15.4. REINFORCEMENT: LAP SPLICES IN REINFORCING BARS SHALL BE BY THE NON-CONTACT LAP SPLICE METHOD WITH AT LEAST 2 INCHES CLEARANCE BETWEEN BARS. THE BUILDING OFFICIAL MAY PERMIT THE USE OF CONTACT LAP SPLICES WHEN NECESSARY FOR THE SUPPORT OF THE REINFORCING PROVIDED IT CAN BE DEMONSTRATED BY MEANS OF PRE-CONSTRUCTION TESTING THAT ADEQUATE ENCASEMENT OF THE BARS AT THE SPLICE CAN BE ACHIEVED, AND PROVIDED THAT THE SPLICES ARE PLACED SO THAT A LINE THROUGH THE CENTER OF THE TWO SPLICED BARS IS PERPENDICULAR TO THE SURFACE OF THE SHOTCRETE WORK.

3.15.5. PRE-CONSTRUCTION TESTS: WHEN REQUIRED BY THE SPECIFICATIONS OR BUILDING OFFICIAL, A TEST PANEL SHALL BE SHOT, CURED, CORED OR SAWN, EXAMINED AND TESTED PRIOR TO COMMENCEMENT OF THE PROJECT. THE SAMPLE PANEL SHALL BE REPRESENTATIVE OF THE PROJECT AND SIMULATE JOB CONDITIONS AS CLOSELY AS POSSIBLE. THE PANEL THICKNESS AND REINFORCING SHALL REPRODUCE THE THICKEST AND MOST CONGESTED AREA SPECIFIED IN THE STRUCTURAL DESIGN. IT SHALL BE SHOT AT THE SAME ANGLE, USING THE SAME NOZZLEMAN AND WITH THE SAME CONCRETE MIX DESIGN THAT WILL BE USED ON THE PROJECT.

3.15.6. REBOUND: ANY REBOUND OR ACCUMULATED LOOSE AGGREGATE SHALL BE REMOVED FROM THE SURFACES TO BE COVERED PRIOR TO PLACING THE INITIAL OR ANY SUCCEEDING LAYERS OF SHOTCRETE. REBOUND SHALL NOT BE REUSED AS AGGREGATE.

3.15.7. JOINTS: EXCEPT WHERE PERMITTED HEREIN, UNFINISHED WORK SHALL NOT BE ALLOWED TO STAND FOR MORE THAN 30 MINUTES UNLESS ALL EDGES ARE SLOPED TO A THIN EDGE. BEFORE PLACING ADDITIONAL MATERIAL ADJACENT TO PREVIOUSLY APPLIED WORK, SLOPING AND SQUARE EDGES SHALL BE CLEANED AND WETTED WITH A CONCRETE BONDING AGENT AS APPROPRIATE.

3.15.8. DAMAGE: IN-PLACE SHOTCRETE WHICH EXHIBITS SAGS OR SLOUGHS, SEGREGATION, HONEYCOMBING, SAND POCKETS OR OTHER OBVIOUS DEFECTS SHALL BE REMOVED AND REPLACED. SHOTCRETE ABOVE SAGS AND SLOUGHS SHALL BE REMOVED AND REPLACED WHILE STILL PLASTIC.

3.15.9. CURING: DURING THE CURING PERIODS SPECIFIED HEREIN, SHOTCRETE SHALL BE MAINTAINED ABOVE 40° F, AND IN MOIST CONDITION. IN INITIAL CURING, SHOTCRETE SHALL BE KEPT CONTINUOUSLY MOIST FOR 24 HOURS AFTER PLACEMENT IS COMPLETE. FINAL CURING SHALL CONTINUE FOR SEVEN DAYS AFTER SHOTCRETING, FOR THREE DAYS IF HIGH-EARLY-STRENGTH CEMENT IS USED, OR UNTIL THE SPECIFIED STRENGTH IS OBTAINED. FINAL CURING SHALL CONSIST OF A FOG SPRAY OR AN APPROVED MOISTURE-RETAINING COVER OR MEMBRANE. IN SECTIONS WITH A DEPTH IN EXCESS OF 12", FINAL CURING SHALL BE THE SAME AS THAT FOR INITIAL CURING.

3.15.10. STRENGTH TEST: STRENGTH TEST FOR SHOTCRETE SHALL BE MADE BY AN APPROVED AGENCY ON SPECIMENS WHICH ARE REPRESENTATIVE OF WORK AND WHICH HAVE BEEN WATER SOAKED FOR AT LEAST 24 HOURS PRIOR TO TESTING. WHEN THE MAXIMUM SIZE AGGREGATE IS LARGER THAN 3/8" SPECIMENS SHALL CONSIST OF NOT LESS THAN (3) 3" DIAMETER CORES OR 3-INCH CUBES. WHEN THE MAXIMUM SIZE AGGREGATE IS 3/8" OR SMALLER, SPECIMENS SHALL CONSIST OF NOT LESS THAN (3) 2" DIAMETER CORES OR 2" CUBES. SPECIMENS SHALL BE TAKEN IN ACCORDANCE WITH ONE OF THE FOLLOWING:

A. FROM THE IN-PLACE WORK: TAKEN AT LEAST ONCE EACH SHIFT BUT NOT LESS THAN ONE FOR EACH 50 CUBIC YARDS OF SHOTCRETE; OR

B. FROM TEST PANELS: MADE NOT LESS THAN ONCE EACH SHIFT OR NOT LESS THAN ONE FOR EACH 50 CUBIC YARDS OF SHOTCRETE PLACED. WHEN THE MAXIMUM SIZE AGGREGATE IS LARGER THAN 3/8", THE TEST PANELS SHALL HAVE A MINIMUM DIMENSION OF 18" X 18". WHEN THE MAXIMUM SIZE AGGREGATE IS 3/8" OR SMALLER, THE TEST PANELS SHALL HAVE A MINIMUM DIMENSION OF 12" X 12". PANELS SHALL BE GUNNED IN THE SAME POSITION AS THE WORK, DURING THE COURSE OF THE WORK AND BY NOZZLEMEN DOING THE WORK. THE CONDITION UNDER WHICH THE PANELS ARE CURED SHALL BE THE SAME AS THE WORK.

THE AVERAGE OF THREE CORES FROM A SINGLE PANEL SHALL BE EQUAL TO OR EXCEED 0.85 f'_c WITH NO SINGLE CORE LESS THAN 0.75 f'_c. THE AVERAGE OF THREE CUBES TAKEN FROM A SINGLE PANEL MUST EQUAL OR EXCEED f'_c WITH NO INDIVIDUAL CUBE LESS THAN 0.88 f'_c TO CHECK TESTING ACCURACY. LOCATIONS REPRESENTED BY ERRATIC CORE STRENGTHS MAY BE RETESTED.

3.15.11. INSPECTIONS

A. DURING PLACEMENT. WHEN SHOTCRETE IS USED FOR STRUCTURAL MEMBERS, A SPECIAL INSPECTOR IS REQUIRED BY IBC TABLE 1705.3. THE SPECIAL INSPECTOR SHALL PROVIDE CONTINUOUS INSPECTION OF THE PLACEMENT OF THE REINFORCEMENT AND SHOTCRETING AND SHALL SUBMIT A STATEMENT INDICATING COMPLIANCE WITH THE PLANS AND SPECIFICATIONS.

B. VISUAL EXAMINATION FOR STRUCTURAL SOUNDNESS OF IN-PLACE SHOTCRETE. COMPLETED SHOTCRETE WORK SHALL BE CHECKED VISUALLY FOR REINFORCING BAR EMBEDMENT, VOIDS, ROCK POCKETS, SAND STREAKS AND SIMILAR DEFICIENCIES BY EXAMINING A MINIMUM OF (3) 3" CORES TAKEN FROM (3) AREAS CHOSEN BY THE DESIGN ENGINEER WHICH REPRESENT THE WORST CONGESTION OF REINFORCING BARS OCCURRING IN THE PROJECT. EXTRA REINFORCING BARS MAY BE ADDED TO NON-CONGESTED AREAS TO REPRESENT THE MOST HEAVILY CONGESTED AREAS ELSEWHERE ON THE PROJECT. THE CORES SHALL BE EXAMINED BY THE SPECIAL INSPECTOR AND A REPORT SUBMITTED TO THE BUILDING OFFICIAL PRIOR TO FINAL APPROVAL OF THE SHOTCRETE.

C. TESTING EQUIPMENT. THE EQUIPMENT USED IN PRE-CONSTRUCTION TESTING SHALL BE THE SAME EQUIPMENT USED IN THE WORK REQUIRING SUCH TESTING, UNLESS SUBSTITUTE EQUIPMENT IS APPROVED BY THE STRUCTURAL ENGINEER AND BUILDING OFFICIAL.

3.16. ADHESIVE EXPANSIVE WATERSTOPS

ADHESIVE EXPANSIVE WATERSTOP SHALL BE VOLCLAY WATERSTOP-RX (AS MANUFACTURED BY CETCO), SWELLSTOP OR HYDROTIGHT (GREENSTREAK), OR APPROVED EQUIVALENT. INSTALL PER MANUFACTURER'S RECOMMENDATIONS.

3.17. CONCRETE COORDINATION DRAWINGS

PRIOR TO THE START OF CONCRETE WALL OR ELEVATED SLAB CONSTRUCTION THE CONTRACTOR SHALL SUBMIT CONCRETE COORDINATION DRAWINGS TO THE ARCHITECT/ENGINEER FOR REVIEW AND APPROVAL. COORDINATION DRAWINGS SHALL INCLUDE DIMENSIONS AND SIZES FOR EMBED LOCATIONS, DOOR AND WINDOW OPENINGS, MECHANICAL PENETRATIONS, AND OTHER APPROPRIATE ITEMS.

4. MASONRY

4.1. MORTAR

CMU:

ASTM C270, TYPE S, f'_c = 1800 PSI AT 28 DAYS

4.2. GROUT

ASTM C476, f'_c = 2500 PSI AT 28 DAYS, 5-1/2 SACK MIX (MINIMUM), 3/8" MAX AGGREGATE SLUMP 8" TO 11"

4.3. REINFORCEMENT: SEE STRUCTURAL CONCRETE MATERIALS SECTION OF THESE NOTES.

4.4. CONCRETE MASONRY UNITS (CMU)

CONFORM TO ASTM C90, MINIMUM FACE SHELL THICKNESS OF 1-1/4", GRADE N-1. MINIMUM COMPRESSIVE STRENGTH OF MASONRY (f'_m) SHALL BE 2000 PSI, UNLESS NOTED OTHERWISE.

4.5. INSTALLATION OF MASONRY UNITS.

PER THE IBC SECTION 2104 FOR UNIT MASONRY CONSTRUCTION REQUIREMENTS.

4.6. MASONRY COORDINATION DRAWINGS:

PRIOR TO THE START OF MASONRY CONSTRUCTION, THE CONTRACTOR SHALL SUBMIT MASONRY COORDINATION DRAWINGS TO THE ARCHITECT/ENGINEER FOR REVIEW AND APPROVAL. COORDINATION DRAWINGS SHALL INCLUDE DIMENSIONS AND SIZES FOR EMBED LOCATIONS, DOOR AND WINDOW OPENINGS, MECHANICAL PENETRATIONS, AND OTHER APPROPRIATE ITEMS.

4.7. CONDUIT OR PIPING EMBEDDED IN MASONRY:

4.7.1. NO MASONRY LINTELS SHALL BE SLEEVED FOR PIPING OR CONDUIT EXCEPT AS NOTED ON THE STRUCTURAL DRAWINGS OR AS APPROVED BY THE ENGINEER.

4.7.2. CONDUIT SHALL NOT BE PLACED WITHIN CELLS CONTAINING REINFORCING UNLESS APPROVED BY THE ENGINEER.

4.8. MASONRY VENEER (BRICK, CMU OR STONE UNITS)

4.8.1. MATERIALS: SEE ARCHITECTURAL DRAWINGS AND PROJECT SPECIFICATIONS.

4.8.2. ADHERED MASONRY VENEER

ADHERED UNITS SHALL NOT EXCEED 2-5/8" IN SPECIFIED THICKNESS, 36" IN ANY FACE DIMENSION, OR MORE THAN 5 SQUARE FEET OF FACE DIMENSION AND SHALL NOT WEIGH MORE THAN 15 PSF. ADHERED MASONRY VENEER SHALL CONSIST OF A FULLY ENGINEERED SYSTEM (BACKING BOARD, GROUT AND LATHE/REINFORCING) COMPLYING WITH SEISMIC DESIGN CATEGORY NOTED IN THE DESIGN CRITERIA SECTION OF THESE NOTES. THE ADHERED MASONRY VENEER SYSTEM SHALL BE SUBMITTED TO THE ENGINEER FOR REVIEW AND APPROVAL.

5. METALS

5.1. STRUCTURAL STEEL

5.1.1. STEEL W SHAPES AND C & MC SHAPES 8" OR LARGER SHALL BE ASTM A992 (F_y=50 KSI).

5.1.2. STEEL M, S, HP AND L SHAPES SHALL BE ASTM A572 Gr. 50 (F_y=50 KSI).

5.1.3. OTHER STEEL PLATES AND C & MC SHAPES SMALLER THAN 8" SHALL BE ASTM A36 (F_y=36 KSI).

5.1.4. RECTANGULAR AND ROUND HOLLOW STEEL SECTIONS (HSS) OR TUBE STEEL SECTIONS (TS) SHALL BE ASTM A500, GR. C (F_y=50 KSI).

5.1.5. BOLTS

A. MACHINE BOLTS NOT SPECIFIED AS HIGH STRENGTH SHALL BE ASTM A307 GRADE A.

B. HIGH STRENGTH BOLTS SHALL BE ASTM F3125 GRADE A325 OR GRADE A490 AS INDICATED ON STRUCTURAL DRAWINGS. ALL BOLTS SHALL BE CONSIDERED BEARING TYPE WITH THREADS INCLUDED IN SHEAR PLANE (CONNECTION TYPE N) UNLESS NOTED OTHERWISE. ALL HIGH STRENGTH BOLTED CONNECTIONS SHALL BE INSTALLED WITH NUTS CONFORMING TO ASTM A563 AND HARDENED WASHERS CONFORMING TO ASTM F436.

C. HIGH STRENGTH BOLTS WITH TWIST OFF TYPE TENSION CONTROL MAY BE SUBSTITUTED FOR CONVENTIONAL BOLTS AND SHALL BE ASTM F3125 GRADE F1852 OR GRADE F2280, AND MAY BE USED FOR GRADE A325 OR GRADE A490 RESPECTIVELY.

D. ALL HIGH STRENGTH BOLTS SHALL BE INSTALLED PER THE SPECIFICATION FOR STRUCTURAL JOINTS USING HIGH-STRENGTH BOLTS (LATEST EDITION) BY THE RESEARCH COUNCIL ON STRUCTURAL CONNECTIONS (WWW.BOLTCOUNCIL.ORG).

5.1.6. STEEL ANCHORAGE ELEMENTS:

A. THREADED RODS SHALL BE ALL-THREAD ASTM A36 (F_y=36 KSI) UNLESS NOTED OTHERWISE.

B. WELDED HEADED STUDS: "NELSON STUDS" SHALL BE BY NELSON STUD WELDING, INC. OR APPROVED EQUIVALENT COMPLYING WITH ASTM A108. STUDS SHALL HAVE A MINIMUM F_u OF 65 KSI.

C. ANCHOR RODS: ANCHOR RODS SHALL BE ASTM F1554, F_y=36 KSI WITH HOOKED, HEADED OR THREADED AND NUTTED ENDS AS INDICATED. AT COLUMN LOCATIONS ANCHOR RODS SHALL BE ASTM F1554, F_y=36 KSI WITH HEADED OR THREADED/NUTTED END. TACK WELD NUT TO ANCHOR ROD UNLESS NOTED OTHERWISE. WHERE NOTED, HIGH STRENGTH ANCHOR RODS SHALL BE ASTM F1554, F_y=105 KSI WITH DOUBLE NUTTED PLATE WASHER.

D. EXPANSION ANCHORS SHALL BE CARBON STEEL AS NOTED IN THE FOLLOWING TABLE. ANCHORS IN CONCRETE SHALL HAVE BEEN TESTED IN ACCORDANCE WITH ACI 355.2 AND/OR ICC-ES AC193 FOR CRACKED CONCRETE AND SEISMIC APPLICATIONS. ANCHORS SHALL HAVE A CURRENT CODE REPORT THAT COMPLIES WITH THE CURRENT EDITION OF THE IBC AND SHALL BE RATED FOR USE IN THE SEISMIC DESIGN CATEGORY NOTED IN THE DESIGN CRITERIA SECTION OF THESE NOTES.

EXPANSION ANCHORS IN CONCRETE	CODE REPORT
HILTI KWIK BOLT TZ	ICC ESR-1917
SIMPSON STRONG-BOLT 2	ICC ESR-3037
DEWALT POWER-STUD+ SD2	ICC ESR-2502

EXPANSION ANCHORS IN GROUT FILLED CONCRETE MASONRY	CODE REPORT
HILTI KWIK BOLT 3	ICC ESR-1385
SIMPSON STRONG-BOLT 2	IAPMO ER-240
DEWALT POWER-STUD+ SD1	ICC ESR-2966

E. HEAVY DUTY CONCRETE/MASONRY SCREW ANCHORS SHALL BE USED IN DRY INTERIOR CONDITIONS AND SHALL BE AS NOTED IN THE FOLLOWING TABLE:

HEAVY DUTY CONCRETE/ MASONRY SCREW ANCHORS	CODE REPORT
HILTI KWIK HUS-EZ	ICC ESR-3027(CONC) ICC ESR-3056 (CMU)
SIMPSON TITEN HD	ICC ESR-2713 (CONC) ICC ESR-1056 (CMU)
DEWALT SCREW BOLT+	ICC ESR-3889 (CONC) ICC ESR-4042 (CMU)

F. ADHESIVE ANCHORS SHALL BE THREADED ANCHOR RODS OR REBAR DOWELS USING AN INJECTABLE ADHESIVE AS NOTED IN THE FOLLOWING TABLE. ANCHORS IN CONCRETE SHALL HAVE BEEN TESTED IN ACCORDANCE WITH ACI 355.4 AND/OR ICC-ES AC-308 FOR CRACKED CONCRETE AND SEISMIC APPLICATIONS. ANCHORS SHALL HAVE A CURRENT CODE REPORT THAT COMPLIES WITH THE CURRENT EDITION OF THE IBC AND SHALL BE RATED FOR USE IN THE SEISMIC DESIGN CATEGORY NOTED IN THE DESIGN CRITERIA SECTION OF THESE NOTES.

ADHESIVE ANCHORS IN CONCRETE (1) (2)	CODE REPORT
HILTI HIT HY-200 SAFE SET	ICC ESR-3187
SIMPSON AT-XP (3)	IAPMO ER-263
DEWALT AC200+ DUST-X	ICC ESR-4027

ADHESIVE ANCHORS IN GROUT FILLED CONCRETE MASONRY	CODE REPORT
HILTI HIT HY-270	ICC ESR-4143
SIMPSON AT-XP *	IAPMO ER-281
DEWALT AC100+ GOLD	ICC ESR-3200

(1) ADHESIVE ANCHORS INSTALLED IN HORIZONTAL TO VERTICALLY OVERHEAD ORIENTATION TO SUPPORT SUSTAINED TENSION LOADS SHALL BE DONE BY A CERTIFIED ADHESIVE ANCHOR INSTALLER (AAI) AS CERTIFIED THROUGH ACI/CRSI, OR AN APPROVED ALTERNATE WHEN SUBMITTED AND APPROVED BY THE ENGINEER. PROOF OF CURRENT CERTIFICATION SHALL BE SUBMITTED TO THE ENGINEER FOR APPROVAL PRIOR TO COMMENCEMENT OF INSTALLATION.

(2) ADHESIVE ANCHORS MUST BE INSTALLED IN CONCRETE AGED A MINIMUM OF 21 DAYS.

(3) SIMPSON SET-XP MAY BE USED WHERE BASE MATERIAL TEMPERATURE IS ABOVE 50 DEGREES FAHRENHEIT OR FOR EMBEDMENT GREATER THAN 12-INCHES FOR LONGER GEL TIME. SEE ICC ESR-2508 (CONC) AND IAPMO ER-265 (MASONRY).

G. POWDER ACTUATED FASTENERS: PDF'S OR PAF'S SHALL BE A MINIMUM 0.157" DIA KNURLED SHANK FASTENER AS NOTED IN THE FOLLOWING TABLE, UNLESS NOTED OTHERWISE. FASTENERS DRIVEN INTO STEEL SHALL BE DRIVEN SO THAT THE POINT OF THE FASTENER COMPLETELY PENETRATES THE STEEL BASE MATERIAL. AT TOPPING SLABS, PT SLABS OR SLABS WITH RADIANT HEAT TUBES EMBEDDED WITHIN THE SLAB, LIMIT THE PDF PENETRATION TO 3/4" MAXIMUM AND COORDINATE WITH TENDON/TUBE PLACEMENT AND COVER.

POWDER ACTUATED FASTENERS	CODE REPORT
HILTI X-U	ICC ESR-2269
SIMPSON PDPA	ICC ESR-2138
DEWALT CSI PIN	ICC ESR-2024

H. CONCRETE/MASONRY SCREWS SHALL BE AS NOTED IN THE FOLLOWING TABLE:

CONCRETE/MASONRY SCREWS	CODE REPORT
HILTI KWIK CON II+	-
SIMPSON TITEN	-
DEWALT TAPPER+	ICC ESR-3068 (CONC) ICC ESR-3196 (MAS)

5.1.7. METAL PROTECTION: ALL STEEL EXPOSED TO WEATHER, MOISTURE, SOIL, OR AS NOTED SHALL BE GALVANIZED PER ASTM A123 OR A153 AS APPLICABLE. ALL OTHER STEEL SURFACES SHALL BE SHOP PRIMED AFTER FABRICATION.

REPAIR ALL DAMAGED AREAS OF GALVANIZED PARTS SUCH AS FIELD WELDS, ETC. APPLY REPAIR COATING THICKNESS GREATER THAN OR EQUAL TO ORIGINAL ZINC COATING THICKNESS.

5.1.8. PRE-ENGINEERED STEEL STAIRS AND GUARDRAILS: THE STEEL STAIR MANUFACTURER SHALL SUBMIT SHOP DRAWINGS AND CALCULATIONS SEALED BY A PROFESSIONAL ENGINEER LICENSED IN THE STATE OF THE PROJECT.

5.2. WELDING

5.2.1. ALL WELDING SHALL BE IN ACCORDANCE WITH THE "STRUCTURAL WELDING CODE," AWS D1.1, AWS D1.4 AND AWS D1.8 AS APPROPRIATE.

5.2.2. ALL WELDING SHALL BE BY CERTIFIED WELDERS; USE 70 KSI LOW HYDROGEN FILLER METAL AND SHALL BE PROTECTED PER AWS D1.1 UNTIL USE. FOR ALL FULL PENETRATION WELDS, FILLER METAL SHALL BE NOTCH TOUGH TO MEET CHARPY V-NOTCH OF 20 FOOT-POUND AT -20°F.

5.2.3. NO WELDING OF REINFORCING STEEL SHALL BE ALLOWED EXCEPT WHERE SHOWN. ALL WELDING OF REINFORCEMENT SHALL BE PER ANSI/AWS D1.4. THE FOLLOWING FILLER METAL SHALL BE USED WHEN WELDING REINFORCEMENT:

A. FOR WELDING OF ASTM A706 GR 60 REBAR, 80 KSI FILLER METAL.

B. FOR WELDING OF ASTM A615 GR 60 REBAR, NOT PERMITTED.

C. FOR WELDING OF ASTM A615 GR 40 REBAR, NOT PERMITTED.

5.2.4. ALL FULL PENETRATION FIELD AND SHOP WELDS SHALL BE FULL TIME INSPECTED AND TESTED BY NON-DESTRUCTIVE PROCEDURES. RESULTS OF TESTS SHALL BE SUBMITTED FOR REVIEW BY THE STRUCTURAL ENGINEER.

5.3. WELDING PROCEDURE SPECIFICATION (WPS)

5.3.1. FOR ALL WELDING OF REINFORCING STEEL, NON-PREQUALIFIED WELDS AND ALL WELDING OF COMPONENTS WHICH ARE PART OF THE SEISMIC FORCE RESISTING SYSTEM, CONTRACTOR SHALL SUBMIT A WELDING PROCEDURE SPECIFICATION (WPS) TO ENGINEER FOR APPROVAL. PRIOR TO WELDING, EACH WPS SHALL INCLUDE ALL NECESSARY INFORMATION REQUIRED BY AWS D1.1, AWS D1.4 AND AWS D1.8 AND AS FOLLOWS:

A. APPLICABLE BASE METAL TYPES AND THICKNESSES.

B. SKETCH OF JOINT INDICATING APPLICABLE DIMENSIONS. INDIVIDUAL PASSES SHALL BE IDENTIFIED AND NUMBERED TO IDENTIFY THE SEQUENCE. THE SKETCH SHALL IDENTIFY THE MAXIMUM THICKNESS AND BEAD WIDTH. IN NO CASE SHALL THE LAYER THICKNESS EXCEED 1/4" NOR THE BEAD WIDTH EXCEED 5/8."

C. PREHEAT REQUIREMENTS.

D. ELECTRICAL CHARACTERISTICS (I.E., CURRENT, VOLTAGE, TRAVEL SPEED, ETC.).

E. ELECTRODE REQUIREMENTS SHALL MEET THE REQUIREMENTS OF AWS A5.1, AWS A5.5, AWS A5.17, AWS A5.23, AWS A5.18, AWS A5.20, AWS A5.28, AND AWS A5.29, AS APPLICABLE FOR WELDING METHOD USED.

6. CARPENTRY

DIMENSION LUMBER SHALL BE DF No.2. SAWN LUMBER BEAMS, HEADERS AND COLUMNS SHALL BE DF No.1 OR AS SHOWN ON THE DRAWINGS. ALL 2" NOMINAL LUMBER SHALL BE KILN DRIED (KD). EACH PIECE OF LUMBER SHALL BEAR STAMP OF WEST COAST LUMBER INSPECTION BUREAU (WCLIB) AND/OR WESTERN WOOD PRODUCTS ASSOCIATION (WWPA) SHOWING GRADE MARK.

6.1. PRESSURE-PRESERVATIVE TREATMENT IN ACCORDANCE WITH AMERICAN WOOD PROTECTION ASSOCIATION (AWPA) STANDARD U1, LATEST EDITION TO THE USE CATEGORY AS FOLLOWS:

6.1.1. TREAT ALL WOOD IN CONTACT WITH CONCRETE, MORTAR, GROUT, MASONRY AND WITHIN 12" OF EARTH TO THE REQUIREMENTS OF USE CATEGORY UC2 (INTERIOR/DAMP).

6.1.2. TREAT ALL WOOD EXPOSED TO WEATHER BUT PROTECTED BY PAINT OR COVER TO THE REQUIREMENTS OF USE CATEGORY UC3A (ABOVE GROUND PROTECTED).

6.1.3. TREAT ALL WOOD EXPOSED TO WEATHER SUCH AS EXTERIOR DECKING, JOISTS, BEAMS, RAILINGS, ETC TO THE REQUIREMENTS OF USE CATEGORY UC3B (ABOVE GROUND EXPOSED).

6.1.4. TREAT ALL WOOD IN CONTACT WITH THE GROUND, SOIL OR FRESH WATER TO THE REQUIREMENTS OF USE CATEGORY UC4A (GROUND CONTACT GENERAL USE).

6.1.5. TREAT ALL LUMBER NOTED AS FIRE TREATED TO THE REQUIREMENTS OF USE CATEGORY UCFA (FIRE RETARDANT INTERIOR).

6.1.6. WHERE POSSIBLE, PRECUT MATERIAL PRIOR TO TREATMENT. ALL FIELD CUTS AND DRILLED HOLES SHALL BE FIELD TREATED IN ACCORDANCE WITH AWPA M-4.

6.2. CARPENTRY HARDWARE

6.2.1. MACHINE BOLTS SHALL BE ASTM A307.

6.2.2. PROVIDE MALLEABLE IRON WASHERS (MIW) OR HEAVY PLATE CUT WASHERS WHERE BOLT HEADS, NUTS OR LAG SCREWS BEAR ON WOOD.

6.2.3. NAILS SHALL BE COMMON, AMERICAN OR CANADIAN MANUFACTURER ONLY WITH MIN. DIAMETERS AS FOLLOWS:

NAIL SIZE	MINIMUM NAIL SHANK DIAMETER	MINIMUM NAIL LENGTH
8d	0.131"	2 1/2"
10d	0.148"	3"
12d	0.148"	3 1/4"
16d SINKER	0.148"	3 1/4"
16d	0.162"	3 1/2"
20d	0.192"	4"

6.2.4. LAG SCREWS SHALL MEET THE REQUIREMENTS OF ANSI/ASME B18.2.1. WOOD SCREWS SHALL MEET THE REQUIREMENTS OF ANSI/ASME B18.6.1.

6.2.5. ANCHORS AND CONNECTIONS SHALL BE SIMPSON, USP, OR ICC (INTERNATIONAL CODE COUNCIL) APPROVED. ALL FASTENERS SHALL BE INSTALLED PER MANUFACTURER'S RECOMMENDATIONS UNLESS OTHERWISE SHOWN. SUBSTITUTED CONNECTIONS SHALL HAVE A TABULATED CAPACITY EQUAL TO OR GREATER THAN THE SPECIFIED CONNECTOR.

6.2.6. CORROSION RESISTANT HARDWARE AND FASTENERS:

A. FASTENERS AND HARDWARE EXPOSED TO WEATHER OR IN UNHEATED PORTIONS OF THE BUILDING SHALL BE MECHANICALLY OR HOT DIPPED GALVANIZED PER ASTM B695 - CLASS 55 OR ASTM A153 - CLASS D. HARDWARE IN CONTACT WITH TREATED WOOD SHALL CONFORM TO A MINIMUM GALVANIZED COATING OF G185 OR AS NOTED BELOW.

B. IF PRESERVATIVE TREATMENT USED IS ACZA (AMMONIACAL COPPER ZINC ARSENATE), IF THE CHEMICAL RETENTION LEVEL IS AWPA USE CATEGORY UC4A OR GREATER, OR IF THE PRESERVATIVE TREATMENT USED IS NOT KNOWN, HARDWARE SHALL BE TYPE 316L STAINLESS STEEL. FASTENERS SHALL BE TYPE 304 OR 305 STAINLESS STEEL.

C. HARDWARE IN MARINE ENVIRONMENT SHALL BE TYPE 316L STAINLESS STEEL. FASTENERS SHALL BE TYPE 316 STAINLESS STEEL, HOT DIPPED GALVANIZED TO ASTM A153 - CLASS C, SILICON BRONZE, OR COPPER.

D. IN THE EVENT OF A CONFLICT BETWEEN THE HARDWARE MANUFACTURER'S RECOMMENDATIONS FOR SELECTING CORROSION-RESISTANT HARDWARE AND FASTENERS, THESE NOTES, AND THE SPECIFICATIONS, THE MOST STRINGENT REQUIREMENT SHALL BE USED UNLESS APPROVED BY THE ENGINEER.

6.3. MINIMUM NAILING: PER IBC TABLE 2304.10.1 FASTENING SCHEDULE.

6.4. COORDINATION AT HOLES IN WOOD STUD WALLS

6.4.1. PIPES IN INTERIOR NONBEARING WALLS: STUD PARTITIONS CONTAINING PIPES SHALL BE FRAMED, AND THE JOISTS SHALL BE SPACED, SO AS TO GIVE PROPER CLEARANCE FOR THE PIPING. WHERE A PARTITION CONTAINING PIPING RUNS PARALLEL TO THE JOISTS, THE JOISTS SHALL BE DOUBLED AND SPACED SO AS TO PERMIT THE PASSAGE OF SUCH PIPING AND SHALL BE BRIDGED. WHERE PIPES ARE PLACED IN, OR PARTIALLY IN, A PARTITION NECESSITATING THE CUTTING OF THE SOLES OR PLATES, A SIMPSON RPS STRAP SHALL BE FASTENED TO EACH PLATE ACROSS AND TO EACH SIDE OF THE OPENING WITH NOT LESS THAN SIX 16d NAILS.

6.4.2. CUTTING AND NOTCHING SAWN LUMBER: IN EXTERIOR WALLS AND BEARING PARTITIONS, ANY WOOD STUD IS PERMITTED TO BE CUT OR NOTCHED TO A DEPTH NOT EXCEEDING 15 PERCENT OF ITS WIDTH. CUTTING OR NOTCHING OF STUDS TO A DEPTH NOT GREATER THAN 40 PERCENT OF THE WIDTH OF THE STUD IS PERMITTED IN NONBEARING PARTITIONS SUPPORTING NO LOADS OTHER THAN THE WEIGHT OF THE PARTITION.

6.4.3. CUTTING AND NOTCHING ENGINEERED LUMBER: CUTTING AND NOTCHING SHALL NOT BE PERMITTED IN ENGINEERED LUMBER (LSL) STUDS WITHOUT APPROVAL FROM THE ENGINEER OF RECORD.

6.4.4. BORED HOLES IN SAWN LUMBER: A HOLE NOT GREATER IN DIAMETER THAN 33 PERCENT OF THE STUD WIDTH IS PERMITTED TO BE BORED IN ANY WOOD STUD WITHOUT ENGINEERING VERIFICATION. BORED HOLES NOT GREATER THAN 60 PERCENT OF THE WIDTH OF THE STUD ARE PERMITTED IN NONBEARING PARTITIONS, PROVIDED NOT MORE THAN ANY TWO ADJACENT STUDS ARE SO BORED. IN NO CASE SHALL THE EDGE OF THE BORED HOLE BE NEARER THAN 5/8-INCH FROM THE EDGE OF THE STUD. BORED HOLES SHALL NOT BE LOCATED AT THE SAME SECTION OF STUD AS A NOTCH OR CUT AND SHALL NOT BE LOCATED WITHIN 8-INCHES OF THE END OF THE STUD.

6.4.5. BORED HOLES IN ENGINEERED LUMBER: BORED HOLES SHALL NOT BE PERMITTED IN ENGINEERED LUMBER (LSL) STUDS WITHOUT APPROVAL FROM THE ENGINEER OF RECORD.

6.5. SHEATHING (PLYWOOD/ORIENTED STRAND BOARD)

EACH SHEET SHALL BEAR THE TRADEMARK OF THE AMERICAN PLYWOOD ASSOCIATION; ALL SHEATHING SHALL CONFORM TO STANDARD PS 2 OR PRP-108. THICKNESS, NUMBER OF PLIES AND LAY-UP AS SHOWN. ALL PLYWOOD SHALL BE C-D INTERIOR WITH EXTERIOR GLUE OR AS NOTED ON THE DRAWINGS AND SHALL BE GROUP I OR II SPECIES. EXCEPT AS OTHERWISE SHOWN, PROVIDE THE FOLLOWING MINIMUM NAILING: PANEL EDGES 10d AT 6" ON CENTER, INTERMEDIATE SUPPORT 10d AT 12" ON CENTER. GAP SHEETS 1/8" FOR 4'x8' SHEETS AND 1/4" FOR 8'x8' AND LARGER SHEETS. THE MOISTURE CONTENT SHALL NOT BE GREATER THAN 15% AT TIME OF ROOFING.

6.6. GLUED-LAMINATED TIMBER

MATERIALS, MANUFACTURE AND QUALITY CONTROL PER ANSI/AITC A190 "STRUCTURAL GLUED LAMINATED TIMBER." CAMBER 1-1/2 TIMES DEAD LOAD DEFLECTION WHERE NOT INDICATED ON DRAWINGS. ALL BEAM MEMBERS SHALL BE COMBINATION 24F-V4 FOR SIMPLE SPANS AND 24F-V8 FOR CONTINUOUS OR CANTILEVERED SPANS AND HAVE EXTERIOR GLUE. ALL COLUMN MEMBERS SHALL BE 24F-V8 UNLESS NOTED OTHERWISE. ALL MEMBERS EXPOSED TO VIEW SHALL BE ARCHITECTURAL APPEARANCE GRADE UNLESS NOTED OTHERWISE. ALL MEMBERS CONCEALED FROM VIEW SHALL BE INDUSTRIAL APPEARANCE UNLESS NOTED OTHERWISE. SEE ARCHITECTURAL DRAWINGS AND PROJECT SPECIFICATIONS FOR ADDITIONAL REQUIREMENTS.

6.6.1. ADHESIVES SHALL MEET THE REQUIREMENTS FOR WET CONDITIONS OF SERVICE.

6.6.2. MEMBERS SHALL BE MARKED INDICATING CONFORMANCE WITH ANSI/AITC 190.1. IN ADDITION, A CERTIFICATE OF SUCH CONFORMANCE SHALL BE PROVIDED TO THE BUYER.

6.7. MANUFACTURED STRUCTURAL WOOD MEMBERS

6.7.1. PARALLAM PSL POSTS AND COLUMNS SHALL BE PARALLAM 1.8E AS MANUFACTURED BY WEYERHAEUSER OR APPROVED EQUIVALENT. PARALLAM PSL BEAMS SHALL BE PARALLAM 2.2E AS MANUFACTURED BY WEYERHAEUSER OR APPROVED EQUIVALENT.

6.7.2. TIMBERSTRAND LSL STUDS SHALL BE TIMBERSTRAND 1.3E AS MANUFACTURED BY WEYERHAEUSER OR APPROVED EQUIVALENT.

6.7.3. MICROLLAM LVL MEMBERS SHALL BE MICROLLAM 2.0E AS MANUFACTURED BY WEYERHAEUSER OR APPROVED EQUIVALENT.

6.8. PRE-ENGINEERED METAL-PLATE-CONNECTED WOOD TRUSSES

6.8.1. GEOMETRY AND SPACING SHALL BE AS SHOWN. THE MANUFACTURER SHALL PROVIDE ADDITIONAL FRAMING MEMBERS AS SHOWN OR AS NECESSARY TO SUPPORT MECHANICAL EQUIPMENT, WALLS AND/OR PARTITIONS, SNOW DRIFT LOADS, ETC.

6.8.2. WHERE NOTED, PRECUT BLOCKING, BRIDGING, BRACING AND/OR FILLER PIECES SHOWN ON THE STRUCTURAL DRAWINGS SHALL BE PROVIDED BY THE TRUSS MANUFACTURER.

6.8.3. TRUSS MANUFACTURER SHALL DESIGN AND PROVIDE ALL PERMANENT INDIVIDUAL MEMBER RESTRAINT/BRACING, INCLUDING WIND UPLIFT BRACING.

6.8.4. GENERAL CONTRACTOR SHALL PROVIDE TEMPORARY INSTALLATION RESTRAINT/BRACING IN ACCORDANCE WITH BCSI-2013 (UPDATE MARCH 2015) BUILDING COMPONENT SAFETY INFORMATION - GUIDE TO GOOD PRACTICE FOR HANDLING, INSTALLING, RESTRAINING AND BRACING OF METAL PLATE CONNECTED WOOD TRUSSES.

6.8.5. FOR TRUSSES SPANNING 35-FEET OR GREATER TRUSS MANUFACTURER SHALL DESIGN THE HEEL PLATES CONSIDERING THE EFFECT OF ECCENTRIC LOADING.

6.8.6. DESIGN LOADS SHALL BE AS STATED IN THE DESIGN CRITERIA SECTION OF THESE NOTES PLUS ANY SPECIAL LOADS INDICATED ON THE DRAWINGS. UNLESS NOTED OTHERWISE, MINIMUM DESIGN LOADS SHALL INCLUDE:

A. TOTAL DEAD LOAD OF 30 PSF AT FLOORS AND 15 PSF AT ROOFS (INCLUDING TRUSS SYSTEM DEAD LOADS).

B. BOTTOM CHORD SUPERIMPOSED DEAD LOAD OF 5 PSF (INCLUDED IN TOTAL DEAD LOAD NOTED ABOVE).

C. MINIMUM NET UPLIFT LOAD OF 10 PSF OR AS DETERMINED USING SITE SPECIFIC "COMPONENTS AND CLADDING" WIND FORCES IN ACCORDANCE WITH THE CRITERIA NOTED IN THE DESIGN CRITERIA SECTION OF THESE NOTES, WHICHEVER IS GREATER.

6.8.7. PROPRIETARY COMPONENTS SHALL HAVE ICC (INTERNATIONAL CODE COUNCIL) APPROVAL.

6.8.8. SHOP DRAWINGS SHALL INCLUDE A TRUSS PLACEMENT DIAGRAM AND TRUSS DESIGN DRAWINGS. TRUSS DESIGN DRAWINGS SHALL INCLUDE DETAILS OF ALL PERMANENT INDIVIDUAL TRUSS MEMBER RESTRAINT/BRACING (INCLUDING BOTTOM CHORD AND WEB BRACING REQUIRED TO RESIST WIND UPLIFT FORCES). TRUSS DESIGN DRAWINGS SHALL INCLUDE STRUCTURAL CALCULATIONS THAT INDICATE MEMBER STRESSES, SPECIES/GRADES AND APPLICABLE ICC APPROVAL. TRUSS DESIGN DRAWINGS SHALL BE SEALED BY A PROFESSIONAL ENGINEER REGISTERED IN THE STATE OF THE PROJECT.

6.8.9. UNLESS NOTED OTHERWISE, THE TRUSS MANUFACTURER SHALL SPECIFY AND FURNISH CONNECTION HARDWARE NECESSARY FOR INSTALLATION OF THEIR SYSTEM.

6.8.10. DESIGN AND MANUFACTURE OF METAL-PLATE-CONNECTED TRUSSES SHALL CONFORM TO CURRENT STANDARDS OF THE TRUSS PLATE INSTITUTE (TPI): TPI 1-2014: NATIONAL DESIGN STANDARDS FOR METAL-PLATE-CONNECTED WOOD TRUSS CONSTRUCTION.

6.8.11. DELIVERED COMPONENTS SHALL BE ACCOMPANIED BY FABRICATOR'S CERTIFICATE OF CONFORMANCE TO THE REFERENCED STANDARDS, AND BY USER ADVISORY NOTICES EQUIVALENT TO BUILDING COMPONENT SAFETY INFORMATION, BCSI (CURRENT EDITION) - GUIDE TO GOOD PRACTICE FOR HANDLING, INSTALLING, RESTRAINING, AND BRACING OF METAL-PLATE-CONNECTED WOOD TRUSSES.

3/1/2024 7:20:18 PM

in site architects
1000 university ave. w. suite 130
st. paul, minnesota 55104
612-252-4820

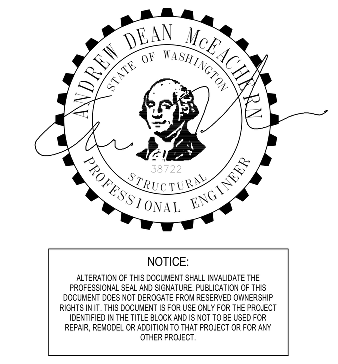

NOTICE:
ALTERATION OF THIS DOCUMENT SHALL INVALIDATE THE PROFESSIONAL SEAL AND SIGNATURE. PUBLICATION OF THIS DOCUMENT DOES NOT DEROGATE FROM RESERVED OWNERSHIP RIGHTS IN IT. THIS DOCUMENT IS FOR USE ONLY FOR THE PROJECT IDENTIFIED IN THE TITLE BLOCK AND IS NOT TO BE USED FOR REPAIR, REMODEL OR ADDITION TO THAT PROJECT OR FOR ANY OTHER PROJECT.

WESLEY BRADLEY PARK 2
EAST BROWNSTONE
707 39TH AVENUE SE
PUYALLUP, WA 98374

PERMIT RESUBMITTAL
03/01/2024

ORIGINAL ISSUE: 08/17/16

REVISIONS

No.	Description	Date

2220236.20
PROJECT NUMBER

KJK DRAWN BY
ADM CHECKED BY

WESLEY BRADLEY PARK 2
EAST BROWNSTONE

AHBL
TACOMA SEATTLE SPOKANE TRI-CITIES
2215 North 30th Street, Suite 300, Tacoma,WA 98403
253.383.2422 TEL 253.383.2572 FAX www.ahbl.com WEB

STRUCTURAL NOTES

S0.2-B

11. STATEMENT OF SPECIAL INSPECTIONS

IBC	SI	SO	TITLE
1705.2	✓	✓	STEEL CONSTRUCTION (SEE TABLES 15A, 15B, 15C, AND 15D)
1705.3	✓	✓	CONCRETE CONSTRUCTION (SEE TABLE 13)
1705.4	✓	✓	MASONRY CONSTRUCTION (SEE TABLES 14A, 14B, 14C, 14D & 14E)
1705.6	✓	N/R	SOILS (SEE TABLE 12A)
1705.12.2	✓	✓	STRUCTURAL WOOD - SEISMIC FORCE RESISTING SYSTEM (SEE TABLE 18)

SI = SPECIAL INSPECTION

SO = STRUCTURAL OBSERVATION

✓ = ITEM IS REQUIRED

N/R = ITEM IS NOT REQUIRED

SPECIAL INSPECTIONS INDICATED ARE FOR STRUCTURAL ELEMENTS ONLY. SEE ARCH, MECH AND ELEC DRAWINGS FOR ADDITIONAL SPECIAL INSPECTIONS.

11.

11.1. INSPECTION/TESTING REQUIREMENTS:

SEE DRAWINGS, SPECIFICATIONS, AND IBC SECTIONS 110, AND CHAPTER 17.

11.2. INSPECTIONS BY THE BUILDING OFFICIAL (IBC SECTION 110):

11.2.1. FOOTING AND FOUNDATION INSPECTIONS SHALL BE MADE AFTER EXCAVATIONS ARE COMPLETE AND ANY REQUIRED REINFORCING IS IN PLACE. ANY REQUIRED FORMS SHALL BE IN PLACE PRIOR TO INSPECTION.

11.2.2. CONCRETE SLAB AND UNDER FLOOR INSPECTIONS SHALL BE MADE AFTER ALL IN SLAB OR UNDER FLOOR REINFORCING, CONDUIT, PIPING AND OTHER ANCILLARY EQUIPMENT ITEMS AND ACCESSORIES ARE IN PLACE BUT PRIOR TO CONCRETE PLACEMENT OR FLOOR SHEATHING INSTALLATION.

11.2.3. FRAMING INSPECTIONS SHALL BE MADE AFTER ALL SHEATHING, FRAMING, BLOCKING AND BRACING ARE COMPLETE AND ALL PIPES, DUCTS, ELECTRICAL, PLUMBING, ETC., ARE INSTALLED AND APPROVED PRIOR TO COVER.

11.2.4. IN ADDITION TO THE INSPECTIONS SPECIFIED ABOVE, THE BUILDING OFFICIAL IS AUTHORIZED TO MAKE OR REQUIRE OTHER INSPECTIONS OF ANY CONSTRUCTION WORK TO ASCERTAIN COMPLIANCE WITH THE PROVISIONS OF THE IBC OR OTHER LAWS ENFORCED BY THE BUILDING OFFICIAL.

11.3. STRUCTURAL TESTS AND SPECIAL INSPECTIONS (IBC CHAPTER 17):

11.3.1. SEE PROJECT SPECIFICATIONS FOR ADDITIONAL REQUIREMENTS.

11.3.2. STRUCTURAL TESTS AND SPECIAL INSPECTIONS SHALL BE PERFORMED IN ACCORDANCE WITH THE REQUIREMENTS OF CHAPTER 17 OF THE IBC AS WELL AS ANY ADDITIONAL REQUIREMENTS OF THE BUILDING OFFICIAL. OMISSION FROM THE LIST BELOW OF TESTING AND INSPECTION REQUIREMENTS SHALL NOT RELIEVE THE CONTRACTOR FROM PROVIDING TESTING AND INSPECTION REQUIRED BY THE SPECIFICATIONS, THE IBC AND THE BUILDING OFFICIAL.

11.3.3. TESTING AND SPECIAL INSPECTIONS SHALL BE COMPLETED IN ACCORDANCE WITH THE REQUIREMENTS OF CHAPTER 17 OF THE IBC FOR THE ITEMS LISTED IN THIS SECTION.

11.4. STRUCTURAL OBSERVATION

11.4.1. STRUCTURAL OBSERVATION MAY BE PERFORMED DURING CONSTRUCTION IN A MANNER AS REQUIRED TO BECOME GENERALLY FAMILIAR WITH THE IN-PLACE CONSTRUCTION.

11.4.2. STRUCTURAL OBSERVATION EXTENT SHALL BE AS INDICATED ABOVE. TIMING AND DURATION OF OBSERVATIONS SHALL BE COORDINATED WITH THE GENERAL CONTRACTOR DURING CONSTRUCTION.

11.4.3. CONSTRUCTION OBSERVATION REPORTS AND FINDINGS SHALL NOT BE VIEWED AS A WARRANTY OR GUARANTEE BY THE STRUCTURAL ENGINEER.

11.5. SPECIAL INSPECTOR: SHALL BE CURRENTLY WABO CERTIFIED.

11.5.1. THE SPECIAL INSPECTOR SHALL OBSERVE THE WORK ASSIGNED FOR CONFORMANCE WITH THE APPROVED DESIGN DRAWINGS AND SPECIFICATIONS.

11.5.2. THE SPECIAL INSPECTOR SHALL FURNISH INSPECTION REPORTS TO THE BUILDING OFFICIAL, ENGINEER OF RECORD, ARCHITECT OF RECORD, AND OTHER DESIGNATED PERSONS. ALL DISCREPANCIES SHALL BE BROUGHT TO THE IMMEDIATE ATTENTION OF THE GENERAL CONTRACTOR FOR CORRECTION, THEN, IF NOT IN CONFORMANCE, TO THE PROPER DESIGN AUTHORITY AND BUILDING OFFICIAL.

11.5.3. THE SPECIAL INSPECTOR SHALL SUBMIT A FINAL REPORT STATING WHETHER THE WORK REQUIRING SPECIAL INSPECTION WAS IN CONFORMANCE WITH THE APPROVED PLANS AND SPECIFICATIONS AND THE APPLICABLE WORKMANSHIP PROVISIONS OF THE IBC.

12A. REQUIRED SPECIAL INSPECTIONS AND TEST OF SOILS

IBC TABLE 1705.6

SPECIAL INSPECTION OR TEST TYPE	CONTINUOUS SPECIAL INSPECTION	PERIODIC SPECIAL INSPECTION
1. VERIFY MATERIALS BELOW SHALLOW FOUNDATIONS ARE ADEQUATE TO ACHIEVE THE DESIGN BEARING CAPACITY	N/R	✓
2. VERIFY EXCAVATIONS ARE EXTENDED TO PROPER DEPTH AND HAVE REACHED PROPER MATERIAL	N/R	✓
3. PERFORM CLASSIFICATION AND TESTING OF COMPACTED FILL MATERIAL	N/R	✓
4. VERIFY USE OF PROPER MATERIALS, DENSITIES, AND LIFT THICKNESSES DURING PLACEMENT AND COMPACTION OF COMPACTED FILL	✓	N/R
5. PRIOR TO PLACEMENT OF COMPACTED FILL, INSPECT SUBGRADE AND VERIFY THAT SITE HAS BEEN PREPARED PROPERLY	N/R	✓

12.

12.1. SPECIAL INSPECTIONS AND TESTS FOR EXISTING SITE SOIL CONDITIONS, FILL PLACEMENT, AND LOAD-BEARING REQUIREMENTS PER IBC 1705.6., AS NOTED IN TABLE 12A.

12.1.1. THE APPROVED GEOTECHNICAL REPORT AND THE CONSTRUCTION DOCUMENTS PREPARED BY THE REGISTERED DESIGN PROFESSIONALS SHALL BE USED TO DETERMINE COMPLIANCE.

13. REQUIRED SPECIAL INSPECTIONS AND TESTS OF CONCRETE CONSTRUCTION

IBC TABLE 1705.3

	SPECIAL INSPECTION OR TEST TYPE	CONTINUOUS SPECIAL INSPECTION	PERIODIC SPECIAL INSPECTION	REFERENCED STANDARD	IBC REFERENCE
1.	INSPECT REINFORCEMENT, INCLUDING PRESTRESSING TENDONS, AND VERIFY PLACEMENT	N/R	✓	ACI 318: CH. 20, 25.2, 25.3, 26.6.1-26.6.3	1908.4
2.	REINFORCING BAR WELDING:				
A.	VERIFY WELDABILITY OF REINFORCING BARS OTHER THAN ASTM A706	N/R	✓	AWS D1.4 ACI 318:26.6.4	
B.	INSPECT SINGLE-PASS FILLET WELDS, MAXIMUM 5/16"	N/R	✓		
C.	INSPECT ALL OTHER WELDS	✓	N/R		
3.	INSPECT ANCHORS CAST IN CONCRETE	N/R	▯	ACI 318: 17.8.2	
4.	INSPECTION OF ANCHORS POST-INSTALLED IN HARDENED CONCRETE MEMBERS				
A.	ADHESIVE ANCHORS INSTALLED IN HORIZONTALLY OR UPWARDLY INCLINED ORIENTATIONS TO RESIST SUSTAINED TENSION LOADS	✓	N/R	ACI 318: 17.8.2.4	
B.	MECHANICAL ANCHORS AND ADHESIVE ANCHORS NOT DEFINED IN 4A	N/R	✓	ACI 318: 17.8.2	
5.	VERIFY USE OF REQUIRED DESIGN MIX	N/R	✓	ACI [illegible] CH. [illegible] 26.4.[illegible]	
6.	PRIOR TO CONCRETE PLACEMENT, FABRICATE SPECIMENS FOR STRENGTH TESTS, PERFORM SLUMP AND AIR CONTENT TESTS, AND DETERMINE THE TEMPERATURE OF THE CONCRETE	✓	N/R	ASTM [illegible] ASTM [illegible] ACI3[illegible] 26.12[illegible]	
7.	INSPECT CONCRETE AND SHOTCRETE PLACEMENT FOR PROPER APPLICATION TECHNIQUES	✓	N/R	ACI 3[illegible]	
8.	VERIFY MAINTENANCE OF SPECIFIED CURING TEMPERATURE AND TECHNIQUES	N/R	✓	ACI 318: 26.5.3-26.5.5	1908.9
9.	INSPECT PRESTRESSED CONCRETE FOR:				
A.	APPLICATION OF PRESTRESSING FORCES	✓	N/R	ACI 318: 26.10	
B.	GROUTING OF BONDED PRESTRESSING TENDONS IN THE SEISMIC FORCE RESISTING SYSTEM	✓	N/R		
10.	INSPECT ERECTION OF PRECAST CONCRETE MEMBERS	N/R	✓	ACI 318: 26.9	
11.	VERIFY IN-SITU CONCRETE STRENGTH, PRIOR TO STRESSING OF TENDONS IN POST-TENSIONED CONCRETE AND PRIOR TO REMOVAL OF SHORES AND FORMS FROM BEAMS AND STRUCTURAL SLABS	N/R	✓	ACI 318: 26.10.2	
12.	INSPECT FORMWORK FOR SHAPE, LOCATION AND DIMENSIONS OF THE CONCRETE MEMBER BEING FORMED	N/R	✓	ACI 318: 26.11.1.2(b)	

13.

13.1. CONCRETE: SPECIAL INSPECTION AND TESTING PER IBC TABLE 1705.3 AS NOTED IN TABLE 13, INCLUDING:

13.1.1. CONTINUOUS SPECIAL INSPECTION OF PRESTRESSED CONCRETE TENDON PLACEMENT, INTEGRITY OF PROTECTIVE WRAPPING, GROUTING OF BONDED PRESTRESSED TENDONS IN THE SEISMIC FORCE RESISTING SYSTEM AND APPLICATION OF PRESTRESSING FORCES.

13.1.2. CONTINUOUS SPECIAL INSPECTION OF CONCRETE AND SHOTCRETE PLACEMENT FOR PROPER APPLICATION TECHNIQUES.

13.1.3. CONTINUOUS SPECIAL INSPECTION OF BOLTS INSTALLED IN CONCRETE PRIOR TO AND DURING PLACEMENT OF CONCRETE.

13.1.4. SHOTCRETE: SEE STRUCTURAL NOTES FOR ADDITIONAL REQUIREMENTS.

13.1.5. SPECIFIC REQUIREMENTS FOR SPECIAL INSPECTION OF ANCHORS INSTALLED IN HARDENED CONCRETE SHALL BE AS DESCRIBED IN THE RESEARCH REPORT ISSUED BY AN APPROVED SOURCE (ICC, IAPMO, ETC.).

13.1.6. CONTINUOUS SPECIAL INSPECTION FOR CONCRETE REINFORCING BARS, CONCRETE MATERIALS OR PLACEMENT OF CONCRETE FOR COMPOSITE MEMBERS.

13.2. SPECIAL INSPECTIONS AND TESTS SHALL NOT BE REQUIRED FOR THE FOLLOWING:

13.2.1. ISOLATED SPREAD FOOTINGS OF BUILDINGS THREE STORIES OR LESS ABOVE THE GRADE PLANE THAT ARE FULLY SUPPORTED BY EARTH OR ROCK.

13.2.2. NON-STRUCTURAL CONCRETE SLABS ON GRADE.

14.A REQUIRED SPECIAL INSPECTION AND TEST OF MASONRY CONSTRUCTION – MINIMUM VERIFICATION REQUIREMENTS

TMS 602 TABLE 3

MINIMUM VERIFICATION REQUIREMENTS	REQUIRED FOR QUALITY ASSURANCE LEVEL 1	REQUIRED FOR QUALITY ASSURANCE LEVEL 2	REFERENCE FOR CRITERIA TMS 602
1. PRIOR TO CONSTRUCTION, VERIFICATION OF COMPLIANCE OF SUBMITTALS.	✓	✓	ART. 1.5
2. PRIOR TO CONSTRUCTION, VERIFICATION OF f'_m AND f'_{acc}, EXCEPT WHERE SPECIFICALLY EXEMPTED BY THE CODE.	N/R	✓	ART. 1.4 B
3. DURING CONSTRUCTION, VERIFICATION OF SLUMP FLOW AND VISUAL STABILITY INDEX (VSI) WHEN SELF- CONSOLIDATING GROUT IS DELIVERED TO THE PROJECT SITE.	N/R	✓	ART. 1.5 & 1.6.3
4. DURING CONSTRUCTION, VERIFICATION OF f'_m AND f'_{acc}, FOR EVERY 5,000 SQUARE FEET	N/R	N/R	ART. 1.4 B
5. DURING CONSTRUCTION, VERIFICATION OF PROPORTIONS OF MATERIALS AS DELIVERED TO THE PROJECT SITE FOR PREMIXED OR PREBLENDED MORTAR, PRESTRESSING GROUT, AND GROUT OTHER THAN SELF-CONSOLIDATING GROUT.	N/R	N/R	ART. 1.4 B

14.B REQUIRED SPECIAL INSPECTION AND TEST OF MASONRY CONSTRUCTION – MINIMUM SPECIAL INSPECTION REQUIREMENTS

TMS 602 TABLE 4

	INSPECTION TASK	CONTINUOUS SPECIAL INSPECTION LEVEL 2	PERIODIC SPECIAL INSPECTION LEVEL 2	REFERENCE FOR CRITERIA TMS 402	REFERENCE FOR CRITERIA TMS 602
1.	AS MASONRY CONSTRUCTION BEGINS, VERIFY THAT THE FOLLOWING ARE IN COMPLIANCE:				
A.	PROPORTIONS OF SITE-PREPARED MORTAR	N/R	✓		ART. 2.1, 2.6 A, & 2.6 C
B.	GRADE AND SIZE OF PRESTRESSING TENDONS AND ANCHORAGES	N/R	✓		ART. 2.4 B & 2.4 H
C.	GRADE, TYPE AND SIZE OF REINFORCEMENT, CONNECTORS, ANCHOR BOLTS, AND PRESTRESSING TENDONS AND ANCHORAGES	N/R	✓		Art. 3.4 & 3.6 A
D.	PRESTRESSING TECHNIQUE	N/R	✓		Art. 3.6 B
E.	PROPERTIES OF THIN-BED MORTAR FOR AAC MASONRY	REQUIRED FOR FIRST 5000 SF	REQUIRED AFTER FIRST 5000 SF		Art. 2.1 C.1
F.	SAMPLE PANEL CONSTRUCTION	N/R	✓		Art. 1.6 D
2.	PRIOR TO GROUTING, VERIFY THAT THE FOLLOWING ARE IN COMPLIANCE:				
A.	GROUT SPACE	N/R	✓		Art. 3.2 D & 3.2 F
B.	PLACEMENT OF PRESTRESSING TENDONS AND [illegible]	[illegible]	✓	Sec. 10.8 & [illegible]	[illegible]
[illegible]	[illegible] JOINT CONSTRUCTION	[illegible]	[illegible]	[illegible]	[illegible]
C.	SIZE AND LOCATION OF STRUCTURAL MEMBERS	N/R	✓		Art. 3.3 F
D.	TYPE, SIZE, AND LOCATION OF ANCHORS, INCLUDING OTHER DETAILS OF ANCHORAGE OF MASONRY TO STRUCTURAL MEMBERS, FRAME, OR OTHER CONSTRUCTION	N/R	ü	Sec. 1.2.1(E), 6.2.1, & 6.3.1	
E.	WELDING OF REINFORCEMENT	✓	N/R	Sec.6.1.6.1.2	
F.	PREPARATION, CONSTRUCTION, AND PROTECTION OF MASONRY DURING COLD WEATHER (TEMPERATURE BELOW 40°F) OR HOT WEATHER (TEMPERATURES ABOVE 90°F)	N/R	✓		Art. 1.8 C & 1.8 D
G.	APPLICATION AND MEASUREMENT OF PRESTRESSING FORCE	✓	N/R		Art. 3.6 B
H.	PLACEMENT OF GROUT AND PRESTRESSING GROUT FOR BONDED TENDONS IS IN COMPLIANCE	✓	N/R		Art. 3.5 & 3.6 C
I.	PLACEMENT OF AAC MASONRY UNITS AND CONSTRUCTION OF THIN-BED MORTAR JOINTS	REQUIRED FOR FIRST 5000 SF	REQUIRED AFTER FIRST 5000 SF		Art. 3.3 B.9 & 3.3 F.1.b
4.	OBSERVE PREPARATION OF GROUT SPECIMENS, MORTAR SPECIMENS, AND/OR PRISMS	N/R	✓		Art. 1.4 B.2.a.3, 1.4 B.2.b.3, 1.4 B.2.c.3, 1.4 B.3, & 1.4 B.4

NOTE: SPECIAL INSPECTION PER TABLE 14.B NOT REQUIRED FOR QUALITY ASSURANCE LEVEL 1

14.

14.1. SPECIAL INSPECTION AND VERIFICATION OF MASONRY CONSTRUCTION SHALL BE IN ACCORDANCE WITH TMS 402 AND TMS 602 QUALITY ASSURANCE REQUIREMENTS, AS NOTED IN THE TABLES ABOVE INCLUDING:

14.1.1. COMPRESSIVE STRENGTH OF MASONRY SHALL BE CONSIDERED SATISFACTORY IF THE COMPRESSIVE STRENGTH OF EACH MASONRY WYTHE AND GROUTED COLLAR JOINT MEETS OR EXCEEDS THE SPECIFIED f'_m.

14.1.2. COMPRESSIVE STRENGTH OF MASONRY SHALL BE DETERMINED IN ACCORDANCE WITH THE PROVISIONS OF TMS 602 USING THE UNIT STRENGTH METHOD.

14.1.3. FOR RISK CATEGORY I, II, OR III, MINIMUM QUALITY ASSURANCE LEVEL FOR STRUCTURAL MASONRY SHALL BE LEVEL 2 AS NOTED IN TABLES 14A AND 14B.

SEE ALL SPECIAL INSPECTIONS IDENTIFIED AND PROVIDE REPORTS TO BUILDING INSPECTOR TO OBTAIN BUILDING FINAL

Special Inspection required per Chapter 17 of the 2018 IBC

15.A REQUIRED SPECIAL INSPECTION AND TESTS OF STRUCTURAL STEEL CONSTRUCTION – INSPECTION OF WELDING

	SPECIAL INSPECTION OR TEST TYPE	CONTINUOUS SPECIAL INSPECTION	PERIODIC SPECIAL INSPECTION	REFERENCED STANDARD
	AISC TABLE N5.4-1			
1.	PRIOR TO WELDING, VERIFY AND INSPECT THE FOLLOWING:	N/R	✓	
A.	WELDER QUALIFICATION RECORDS AND CONTINUITY RECORDS	✓	N/R	
B.	WELDING PROCEDURE SPECIFICATIONS (WPS)	✓	N/R	
C.	MANUFACTURER CERTIFICATIONS FOR WELDING CONSUMABLES	✓	N/R	AISC 360 A3.5
C.	MATERIAL IDENTIFICATION OF STRUCTURAL STEEL MEMBERS	N/R	✓	AISC 360 A3.1
E.	WELDER IDENTIFICATION SYSTEM	N/R	✓	
F.	FIT-UP OF GROOVE WELDS, INCLUDING JOINT GEOMETRY			
	1) JOINT PREPARATION	N/R	✓	
	2) DIMENSIONS: ALIGNMENT, ROOT OPENING, ROOT FACE, BEVEL	N/R	✓	
	3) CLEANLINESS: CONDITION OF STEEL SURFACES	N/R	✓	
	4) TACKING: TACK WELD QUALITY AND LOCATION	N/R	✓	
	5) BACKING TYPE AND FIT (IF APPLICABLE)	N/R	✓	
G.	FIT-UP OF CJP GROOVE WELDS OF HSS T-,Y- AND K-JOINTS WITHOUT BACKING, INCLUDING JOINT GEOMETRY.			
	1) JOINT PREPARATION	✓	N/R	
	2) DIMENSIONS: ALIGNMENT, ROOT OPENING, ROOT FACE, BEVEL	✓	N/R	
	[illegible]ESS: CONDITION OF STEEL SURFACES	✓	N/R	
	[illegible] TACK WELD QUALITY AND LOCATION	✓	N/R	
[illegible]	[illegible]TION AND FINISH OF ACCESS HOLES	N/R	✓	
[illegible]	[illegible]ILLET WELDS			
	[illegible]NS: ALIGNMENT, GAPS AT ROOT	N/R	✓	
	[illegible]ESS: CONDITION OF STEEL SURFACES	N/R	✓	
	[illegible] TACK WELD QUALITY AND LOCATION	N/R	✓	
[illegible]	[illegible]DING EQUIPMENT	N/R	✓	
	AISC 360 TABLE N5.4-2			
2.	DURING WELDING, VERIFY AND INSPECT THE FOLLOWING:			
A.	USE OF QUALIFIED WELDERS	N/R	✓	
B.	CONTROL AND HANDLING OF WELDING CONSUMABLES			
	1) PACKAGING	N/R	✓	
	2) EXPOSURE CONTROL	N/R	✓	
C.	NO WELDING OVER CRACKED TACK WELDS	N/R	✓	
D.	ENVIRONMENTAL CONDITIONS			
	1) WIND SPEED WITHIN LIMITS	N/R	✓	
	2) PRECIPITATION AND TEMPERATURE	N/R	✓	
E.	WELDING PROCEDURE SPECIFICATIONS FOLLOWED			
	1) SETTINGS ON WELDING EQUIPMENT	N/R	✓	
	2) TRAVEL SPEED	N/R	✓	
	3) SELECTED WELDING MATERIALS	N/R	✓	
	4) SHIELDING GAS TYPE AND FLOW RATE	N/R	✓	
	5) PREHEAT APPLIED	N/R	✓	
	6) INTERPASS TEMPERATURE MAINTAINED	N/R	✓	
	7) PROPER POSITION	N/R	✓	
F.	WELDING TECHNIQUES			
	1) INTERPASS AND FINAL CLEANING	N/R	✓	
	2) EACH PASS WITHIN PROFILE LIMITATIONS	N/R	✓	
	3) EACH PASS MEETS QUALITY REQUIREMENTS	N/R	✓	
G.	PLACEMENT AND INSTALLATION OF STEEL HEADED STUD ANCHORS	✓	N/R	
	AISC 360 TABLE N5.4-3			
3.	AFTER WELDING, VERIFY AND INSPECT THE FOLLOWING:			
A.	WELDS CLEANED	N/R	✓	
B.	SIZE, LENGTH, AND LOCATION OF WELDS	✓	N/R	
C.	WELDS MEET VISUAL ACCEPTANCE CRITERIA			
	1) CRACK PROHIBITION	✓	N/R	
	2) WELD TO BASE METAL FUSION	✓	N/R	
	3) CRATER CROSS SECTION	✓	N/R	
	4) WELD PROFILES	✓	N/R	
	5) WELD SIZE	✓	N/R	
	6) UNDERCUT	✓	N/R	
	7) POROSITY	✓	N/R	
D.	ARC STRIKES	✓	N/R	
E.	k-AREA	✓	N/R	
F.	BACKING REMOVED AND WELD TABS REMOVED, IF REQUIRED	✓	N/R	
G.	REPAIR ACTIVITIES	✓	N/R	
H.	DOCUMENT ACCEPTANCE OR REJECTION OF WELDED JOINT OR MEMBER	✓	N/R	
I.	NO PROHIBITED WELDS HAVE BEEN ADDED WITHOUT THE APPROVAL OF THE ENGINEER OF RECORD	N/R	✓	

in site architects
1000 university ave. w. suite 130
st. paul, minnesota 55104
612-252-4820

ANDREW DEAN McEACHRAN
STATE OF WASHINGTON
38722
STRUCTURAL
PROFESSIONAL ENGINEER

NOTICE:
ALTERATION OF THIS DOCUMENT SHALL INVALIDATE THE PROFESSIONAL SEAL AND SIGNATURE. PUBLICATION OF THIS DOCUMENT DOES NOT DEROGATE FROM RESERVED OWNERSHIP RIGHTS IN IT. THIS DOCUMENT IS FOR USE ONLY FOR THE PROJECT IDENTIFIED IN THE TITLE BLOCK AND IS NOT TO BE USED FOR REPAIR, REMODEL OR ADDITION TO THAT PROJECT OR FOR ANY OTHER PROJECT.

WESLEY BRADLEY PARK 2
EAST BROWNSTONE
707 39TH AVENUE SE
PUYALLUP, WA 98374

PERMIT RESUBMITTAL 03/01/2024

ORIGINAL ISSUE: 08/17/16

REVISIONS

No.	Description	Date

2220236.20
PROJECT NUMBER

KJK DRAWN BY
ADM CHECKED BY

WESLEY BRADLEY PARK 2
EAST BROWNSTONE

AHBL
TACOMA SEATTLE SPOKANE TRI-CITIES
2215 North 30th Street, Suite 300, Tacoma,WA 98403
253.383.2422 TEL 253.383.2572 FAX www.ahbl.com WEB

QUALITY ASSURANCE NOTES

S0.3-B

3/1/2024 7:20:23 PM

15.B REQUIRED SPECIAL INSPECTION AND TESTS OF STRUCTURAL STEEL CONSTRUCTION – INSPECTION OF BOLTING			
SPECIAL INSPECTION OR TEST TYPE	CONTINUOUS SPECIAL INSPECTION	PERIODIC SPECIAL INSPECTION	REFERENCED STANDARD
AISC 360 TABLE N5.6-1			
1. PRIOR TO BOLTING, VERIFY AND INSPECT THE FOLLOWING:			
A. MANUFACTURER'S CERTIFICATIONS FOR FASTENER MATERIALS	✓	N/R	
B. FASTENERS MARKED IN ACCORDANCE WITH ASTM REQUIREMENTS	N/R	✓	
C. PROPER FASTENER SELECTED FOR JOINT DETAIL	N/R	✓	AISC 360 A3.1
D. PROPER BOLTING PROCEDURE SELECTED FOR JOINT DETAIL	N/R	✓	
E. CONNECTING ELEMENTS, INCLUDING THE APPROPRIATE FAYING SURFACE CONDITIONS AND HOLE PREPARATION, IF SPECIFIED, MEET APPLICABLE REQUIREMENTS	N/R	✓	
F. PRE-INSTALLATION VERIFICATION TESTING BY INSTALLATION PERSONNEL OBSERVED AND DOCUMENTED FOR FASTENER ASSEMBLIES AND METHODS USED	✓	N/R	
G. PROPER STORAGE PROVIDED FOR BOLTS, NUTS, WASHERS, AND OTHER FASTENER COMPONENTS	N/R	✓	
AISC 360 TABLE N5.6-2			
2. DURING BOLTING, VERIFY AND INSPECT THE FOLLOWING:			
A. FASTENER ASSEMBLIES, OF SUITABLE CONDITION, PLACED IN ALL HOLES AND WASHERS (IF REQUIRED) ARE POSITIONED AS REQUIRED	N/R	✓	
B. JOINT BROUGHT TO THE SNUG-TIGHT CONDITION PRIOR TO THE PRETENSIONING OPERATION	N/R	✓	
C. FASTENER COMPONENT NOT TURNED BY THE WRENCH PREVENTED FROM ROTATING	N/R	✓	
D. FASTENERS ARE PRETENSIONED IN ACCORDANCE WITH THE RCSC SPECIFICATION, PROGRESSING SYSTEMATICALLY FROM THE MOST RIGID POINT TOWARD THE FREE EDGES	N/R	✓	
AISC 360 TABLE N5.6-3			
3. AFTER BOLTING, VERIFY AND INSPECT THE FOLLOWING:			
A. DOCUMENT ACCEPTANCE OR REJECTION OF BOLTED CONNECTIONS	✓	N/R	

15.

15.1. STRUCTURAL STEEL CONSTRUCTION:

SPECIAL INSPECTION AND NONDESTRUCTIVE TESTING OF STRUCTURAL STEEL ELEMENTS SHALL BE IN ACCORDANCE WITH THE QUALITY CONTROL AND QUALITY ASSURANCE REQUIREMENTS OF AISC 360, AS NOTED IN TABLES 15A, 15B, AND AWS D1.1, INCLUDING:

15.1.1. REVIEW OF MATERIAL TEST REPORTS AND CERTIFICATIONS FOR COMPLIANCE WITH THE CONSTRUCTION DOCUMENTS.

15.1.2. OBSERVATION OF WELDING OPERATIONS AND VISUAL INSPECTION OF IN-PROCESS AND COMPLETED WELDS SHALL BE AS FOLLOWS:

A. VERIFY THAT WELD FILLER MATERIAL AND MANUFACTURER'S CERTIFICATE OF COMPLIANCE CONFORM TO AWS SPECIFICATION SPECIFIED. VERIFY WELDERS ARE CERTIFIED BY WABO, THAT PROPER ELECTRODES IN OVEN DRY CONDITIONS ARE USED, AND THAT PROPER METHODS AND PREPARATIONS ARE USED.

B. PERIODIC SPECIAL INSPECTION OF WELDING SHALL BE PERFORMED FOR SINGLE PASS FILLET WELDS LESS THAN OR EQUAL TO 5/16" AND FLOOR AND DECK WELDS.

C. CONTINUOUS SPECIAL INSPECTION OF WELDING SHALL BE PERFORMED ON COMPLETE AND PARTIAL PENETRATION GROOVE WELDS AND FILLET WELDS GREATER THAN 5/16".

D. ALL WELDS SHALL BE CHECKED VISUALLY.

E. ALL SHOP AND FIELD WELDING SHALL BE SUBJECT TO INSPECTION BY A WABO CERTIFIED WELDING INSPECTOR EMPLOYED BY THE OWNER. THE INSPECTOR SHALL UTILIZE RADIOGRAPHIC, ULTRASONIC, OR MAGNETIC PARTICLE TESTING AND ANY OTHER AID TO VISUAL INSPECTION THAT MAY BE DEEMED NECESSARY TO ASSURE THE ADEQUACY OF WELDING. THE OWNER SHALL CARRY OUT TESTING AND INTERPRETATION AT ANY STAGE AFTER WELDING.

F. 10% OF ALL FILLET WELDS SHALL BE CHECKED BY MAGNETIC PARTICLE TESTING.

G. 100% OF ALL COMPLETE PENETRATION WELDS SHALL BE CHECKED BY ULTRASONIC TESTING.

H. ALL WELDS FOUND DEFECTIVE AND REPAIRED SHALL BE REINSPECTED BY THE SAME METHOD ORIGINALLY USED. THE COST OF REPAIR AND REINSPECTION SHALL BE BORNE BY THE CONTRACTOR.

I. STANDARDS FOR ACCEPTANCE SHALL BE AS GIVEN IN AWS D1.1.

15.1.3. OBSERVATION OF BOLTING OPERATIONS.

15.1.4. WHERE CONTINUOUS SPECIAL INSPECTION IS NOTED, IT SHALL BE PERFORMED FOR EACH JOINT OR MEMBER. WHERE PERIODIC SPECIAL INSPECTION IS NOTED, IT SHALL BE PERFORMED ON ITEMS ON A RANDOM BASIS. PERIODIC SPECIAL INSPECTION NEED NOT DELAY FABRICATION OR ERECTION OPERATIONS.

15.1.5. EPOXY ANCHORS: SPECIFIC REQUIREMENTS FOR INSPECTION OF ANCHORS INSTALLED IN HARDENED CONCRETE OR MASONRY SHALL BE AS DESCRIBED IN THE RESEARCH REPORT ISSUED BY AN APPROVED SOURCE (ICC, IAPMO, ETC.).

15.1.6. EXPANSION ANCHORS: SPECIFIC REQUIREMENTS FOR INSPECTION OF ANCHORS INSTALLED IN HARDENED CONCRETE OR MASONRY SHALL BE AS DESCRIBED IN THE RESEARCH REPORT ISSUED BY AN APPROVED SOURCE (ICC, IAPMO, ETC.).

16.

16.1. REQUIRED VERIFICATION AND INSPECTION OF WOOD CONSTRUCTION:

16.1.1. SPECIAL INSPECTION OF THE FABRICATION PROCESS OF PREFABRICATED WOOD STRUCTURAL ELEMENTS AND ASSEMBLIES SHALL BE IN ACCORDANCE WITH IBC SECTION 1704.2.5.

18. REQUIRED SPECIAL INSPECTION AND TESTS FOR SEISMIC RESISTANCE		
SPECIAL INSPECTION OR TEST TYPE	CONTINUOUS SPECIAL INSPECTION	PERIODIC SPECIAL INSPECTION
1. B. STRUCTURAL WOOD IN SEISMIC DESIGN CATEGORY C, D, E OR F: NAILING, BOLTING, ANCHORING AND OTHER FASTENING OF COMPONENTS WITHIN THE MAIN SEISMIC FORCE-RESISTING SYSTEM, INCLUDING WOOD SHEAR WALLS, WOOD DIAPHRAGMS, DRAG STRUTS, BRACES AND HOLDOWNS.	N/R	✓
3. A. ARCHITECTURAL COMPONENTS IN SEISMIC DESIGN CATEGORY D, E OR F: THE ERECTION AND FASTENING OF EXTERIOR CLADDING, INTERIOR AND EXTERIOR NON-BEARING WALLS, AND INTERIOR AND EXTERIOR VENEER	N/R	✓

18.

18.1. SPECIAL INSPECTIONS AND TESTING FOR SEISMIC RESISTANCE:

18.1.1. SPECIAL INSPECTIONS FOR SEISMIC RESISTANCE PER IBC 1705.12 SHALL BE REQUIRED FOR SEISMIC FORCE-RESISTING SYSTEMS IN STRUCTURES ASSIGNED TO SEISMIC DESIGN CATEGORY B, C, D, E OR F PER TABLE 18.

18.1.2. SPECIAL INSPECTION IS NOT REQUIRED FOR THE FOLLOWING:

A. STRUCTURAL WOOD WHERE THE FASTENER SPACING OF THE SHEATHING IS GREATER THAN 4 INCHES ON CENTER.

B. SPECIAL INSPECTION IS NOT REQUIRED FOR ARCHITECTURAL COMPONENTS WHERE:

a. EXTERIOR CLADDING, INTERIOR AND EXTERIOR NONBEARING WALLS AND INTERIOR AND EXTERIOR VENEER ARE 30 FEET OR LESS IN HEIGHT ABOVE GRADE OR WALING SURFACE.

b. EXTERIOR CLADDING AND INTERIOR AND EXTERIOR VENEERS WEIGHTING 5 PSF OR LESS.

c. INTERIOR NONBEARING WALLS WEIGHING 15 PSF OR LESS.

Special Inspection required per Chapter 17 of the 2018 IBC

SEE ALL SPECIAL INSPECTIONS IDENTIFIED AND PROVIDE REPORTS TO BUILDING INSPECTOR TO OBTAIN BUILDING FINAL

3/1/2024 7:20:26 PM

AHBL
TACOMA SEATTLE SPOKANE TRI-CITIES
2215 North 30th Street, Suite 300, Tacoma,WA 98403
253.383.2422 TEL 253.383.2572 FAX www.ahbl.com WEB

in site architects
1000 university ave. w. # suite 130
st. paul, minnesota 55104
612-252-4820

NOTICE:
ALTERATION OF THIS DOCUMENT SHALL INVALIDATE THE PROFESSIONAL ENGINEER'S SEAL AND SIGNATURE. THIS DOCUMENT DOES NOT SURRENDER FROM RESERVED OWNERSHIP RIGHTS IN IT. THIS DOCUMENT IS FOR USE ON LY FOR THE PROJECT DESCRIBED IN IT. IT MAY NOT BE USED FOR ANY OTHER PURPOSE, REPAIR, REMODEL, OR ADDITION TO THIS PROJECT OR FOR ANY OTHER PROJECT.

WESLEY BRADLEY PARK 2
EAST BROWNSTONE

707 39TH AVENUE SE
PUYALLUP, WA 98374

PERMIT RESUBMITTAL
03/01/2024

ORIGINAL ISSUE: 08/17/16

REVISIONS

No.	Description	Date

2220236.20
PROJECT NUMBER

KJK DRAWN BY
ADM CHECKED BY

WESLEY BRADLEY PARK 2
EAST BROWNSTONE

QUALITY ASSURANCE NOTES

S0.4-B

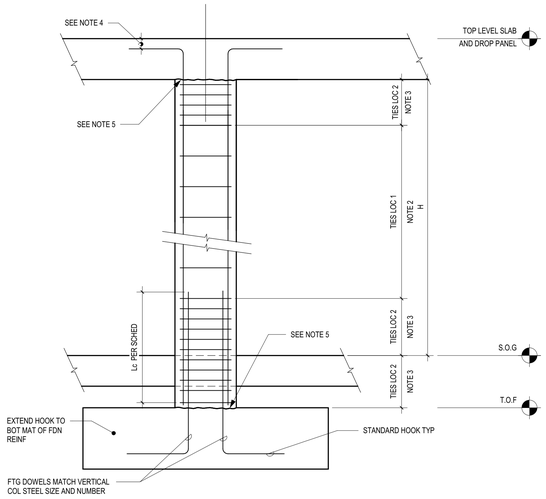

NOTES:

1. SEE CONCRETE COLUMN SCHEDULE FOR COLUMN SIZE AND VERTICAL REINFORCING. FOR COLUMN TIE TYPE, SEE THE COLUMN SCHEDULE, AND THE TYPICAL CONCRETE COLUMN TIE CONFIGURATION DETAIL.
2. SEE CONCRETE COLUMN SCHEDULE UNDER "TIES LOC 1" FOR TIE SIZE, SPACING, AND COLUMN TIE CONFIGURATION TYPE. FOR TIE CONFIGURATION SEE THE TYPICAL CONCRETE COLUMN TIE CONFIGURATION DETAIL.
3. FOR H6, MAXIMUM COLUMN DIMENSION, OR 18 INCHES (WHICHEVER IS GREATER) SEE CONCRETE COLUMN SCHEDULE UNDER "TIES LOC 2" FOR TIE SIZE, SPACING, AND COLUMN TIE CONFIGURATION TYPE. FOR TIE CONFIGURATION SEE THE TYPICAL CONCRETE COLUMN TIE CONFIGURATION DETAIL.
4. PLACE HORIZONTAL HOOKS DIRECTLY BELOW TOP BARS OF BEAMS OR SLABS. SPLAY HOOKS AS NECESSARY TO RELIEVE BAR CONGESTION. AT CONTRACTOR'S OPTION, HOOKS MAY BE PLACED TOWARDS THE INSIDE OF THE COLUMN.
5. UNLESS NOTED OTHERWISE, COLUMN CONSTRUCTION JOINTS SHALL BE AT THE UNDERSIDE OF FLOOR SLABS, BEAMS, OR GIRDERS, AND AT THE TOPS OF FOOTINGS OR FLOOR SLABS. UNLESS NOTED OTHERWISE, INTEGRAL BEAMS, GIRDERS, BRACKETS, COLUMN CAPITALS, HAUNCHES AND DROP PANELS SHALL BE PLACED AT THE SAME TIME AS SLABS.

TYPICAL CONCRETE COLUMN ELEVATION

1 SCHEDULE

1" = 1'-0"

NOTES:

A. SEE CONCRETE COLUMN SCHEDULE FOR TYPE OF REINFORCING CONFIGURATION.

B. A TYPICAL CROSSTIE SHALL HAVE A 135 DGR HOOK AT ONE END AND A 90 DGR HOOK AT THE OTHER END. AT CONTRACTOR'S OPTION, THE 135 DGR HOOK MAY BE REPLACED WITH A 180 DGR HOOK AND THE 90 DGR HOOK MAY BE REPLACED WITH A 135 DGR OR A 180 DGR HOOK.

C. CROSSTIES WITH 90 DGR HOOKS SHALL HAVE THE CONSECUTIVE CROSSTIES ALTERNATED END FOR END ALONG THE LONGITUDINAL REINFORCEMENT.

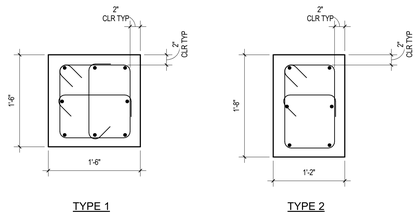

TYPICAL CONCRETE COLUMN REINFORCING CONFIGURATION

CONCRETE COLUMN SCHEDULE

MARK	DIMENSIONS		REINFORCING CONFIGURATION TYPE	REINFORCING			COMMENTS
	DEPTH	WIDTH		DESCRIPTION	TRANSVERSE REINFORCING (TIES)		
					LOC 1	LOC 2	
CC1420-8	1'-2"	1'-8"	TYPE 2	(6) #8	#4 AT 6" OC	#4 AT 4" OC	
CC1818-7	1'-6"	1'-6"	TYPE 1	(8) #7	#4 AT 6" OC	#4 AT 4" OC	

2 SCHEDULE

1" = 1'-0"

FOOTING SCHEDULE

MARK	SIZE	REINFORCING	REMARKS
F3.0	F3'-0" x 3'-0" x 1'-0"	(4) #5 EA WAY AT BOTTOM OF FOOTING	
F3x3	F3'-0" x 3'-0" x 2'-0"	(6) #5 EA WAY AT TOP AND BOTTOM OF FOOTING	(8) #5 DOWELS W/ STD HOOK EA END
F6.0	F6'-0" x 6'-0" x 1'-2"	(7) #5 EA WAY AT BOTTOM OF FOOTING	
F8.0	F8'-0" x 8'-0" x 1'-8"	(9) #6 EA WAY AT BOTTOM OF FOOTING	
F10.0	F10'-0" x 10'-0" x 2'-0"	(11) #7 EA WAY AT BOTTOM OF FOOTING	
F11.0	F11'-0" x 11'-0" x 2'-2"	(12) #7 EA WAY AT BOTTOM OF FOOTING	

FOOTINGS SCHEDULE NOTES:

1. TOP OF FOOTING ELEVATION = -1'-0" UNLESS NOTED OTHERWISE ON PLAN.
2. FOOTING DESIGN BASED ON 3000 PSF ALLOWABLE SOIL BEARING PRESSURE.
3. EQUALLY SPACE REINFORCING IN EACH DIRECTION.
4. PROVIDE 3" CLEAR TO REINFORCING AT BOTTOM OF FOOTING.

REBAR SCHEDULE

MARK	QUANTITY	SIZE	LOCATION	LENGTH	COMMENTS
A10	8	#5	TOP	10'-0	
A12	8	#5	TOP	12'-0"	
B10	10	#5	TOP	10'-0	
B12	10	#5	TOP	12'-0"	
C12	12	#5	TOP	12'-0"	
C15	12	#5	TOP	15'-0"	
D12	16	#5	TOP	12'-0"	
E12	20	#5	TOP	12'-0"	
H	- -	#5	TOP	12'-0"	12" AT 18" OC
J	- -	#5	TOP & BOT	5'-0"	TRIM BARS PER 1 / S4.2-B
K	6	#5	TOP	8'-0"	CORNER BARS 8 / S4.2-B
M	- -	#5	TOP	10'-0"	AT 18" OC

REBAR SCHEDULE NOTES:

1. ALL DIMENSIONS MEASURED FROM OUTSIDE TO OUTSIDE OF REBAR.

3 SCHEDULE

1" = 1'-0"

F'c = 3000 PSI				
BAR SIZE	Ld	Lt	Lsb	Lsbt
#3	17	23	23	30
#4	22	29	29	38
#5	28	37	37	49
#6	33	43	43	56
#7	48	63	63	82
#8	55	72	72	94
#9	62	81	81	106
#10	70	91	91	119
#11	78	102	102	133
#14	93	121	-	-
#18	124	162	-	-

F'c = 4000 PSI				
BAR SIZE	Ld	Lt	Lsb	Lsbt
#3	15	20	20	26
#4	19	25	25	33
#5	24	32	32	42
#6	29	38	38	50
#7	42	55	55	72
#8	48	63	63	82
#9	54	71	71	93
#10	61	80	80	104
#11	67	88	88	115
#14	81	106	-	-
#18	108	141	-	-

F'c = 5000 PSI				
BAR SIZE	Ld	Lt	Lsb	Lsbt
#3	13	17	17	23
#4	17	23	23	30
#5	22	29	29	38
#6	26	34	34	45
#7	38	50	50	65
#8	43	56	56	73
#9	48	63	63	82
#10	54	71	71	93
#11	60	78	78	102
#14	72	94	-	-
#18	96	125	-	-

ALL CONCRETE STRENGTHS				
BAR SIZE	Lb	Lc	Lcs	-
#3	9	12	12	
#4	11	15	12	
#5	14	19	15	
#6	17	23	17	
#7	20	27	20	
#8	22	30	23	
#9	25	34	26	
#10	28	39	29	
#11	31	43	32	
#14	38	-	-	
#18	50	-	-	

NOTES:

1. REINFORCEMENT DEVELOPMENT AND SPLICE LENGTHS ARE IN ACCORDANCE WITH ACI 318.
2. NOTATIONS:
   - db: NOMINAL BAR DIAMETER (IN)
   - Ld: TENSION DEVELOPMENT LENGTH (IN) FOR REINFORCEMENT SATISFYING THE FOLLOWING REQUIREMENTS: SLABS AND WALLS: CLEAR SPACING GREATER THAN 2db, AND CONCRETE CLEAR COVER GREATER THAN db BEAMS AND COLUMNS: CLEAR SPACING GREATER THAN db, AND CONCRETE CLEAR COVER GREATER THAN db
   - Lt: DEVELOPMENT LENGTH OF TOP BARS IN TENSION = 1.3 X Ld (IN)
   - Lb: DEVELOPMENT LENGTH OF BARS OR DOWELS IN COMPRESSION = 22 X db (IN)
   - Lc: TIED COLUMN LAP SPLICE IN COMPRESSION = 30 X db (IN)
   - Lcs: SPIRAL COLUMN LAP SPLICE IN COMPRESSION = 22.5 X db (IN)
   - Lsb: TENSION LAP SPLICE LENGTH FOR OTHER THAN TOP BARS = 1.3 X Ld (IN)
   - Lsbt: TENSION LAP SPLICE LENGTH OF TOP BARS = 1.69 X Ld (IN)
3. MULTIPLY VALUES IN THE TABLE BY 1.5 IF CLEAR SPACING OR CONCRETE COVER DO NOT MEET THE REQUIREMENTS FOR Ld IN NOTE 2.
4. TOP BARS: HORIZONTAL BEAM REINFORCING WITH MORE THAN 12 INCHES OF CONCRETE CAST BELOW.
5. THE DEVELOPMENT AND SPLICE LENGTHS ARE BASED ON REINFORCEMENT STRENGTH Fy = 60 KSI. 6. #14 AND #18 BARS SHALL NOT BE LAP SPLICED. SEE GENERAL NOTES.

REINFORCING BAR DEVELOPMENT AND SPLICE LENGTH TABLES

4 SCHEDULE

1" = 1'-0"

STUDRAIL SCHEDULE

MARK	NUMBER OF RAILS	STUDS PER RAIL	STUD DIA	SO	S	HT	LOCATION
NR	NONE	REQUIRED	-	-	-	-	-
A	8	10	1/2	3 3/4	3 3/4	9 1/2	INTERIOR
B	8	16	1/2	2 3/4	2 3/4	9 1/2	INTERIOR
C	8	24	1/2	2 1/4	2 1/4	9 1/2	INTERIOR
D	10	8	1/2	4 3/8	5 1/4	9 1/2	INTERIOR
E	10	12	1/2	3 3/4	3 3/4	9 1/2	INTERIOR
F	10	15	1/2	3 1/4	3 1/4	9 1/2	INTERIOR
G	10	18	1/2	3	3	9 1/2	INTERIOR

STUDRAIL SCHEDULE NOTES:

1 STUDRAILS MUST BE VERTICAL
2 PROVIDE 3/4" TOP AND 3/4" BOTTOM COVER ABOVE AND BELOW STUDRAIL
3 SPACE STUDRAILS EVENLY ACROSS COLUMN FACE
4 STUDRAILS SHALL BE MANUFACTURED BY DECON, USA. OR APPROVED EQUIVALENT
5 SEE (6 / S4.2-B) FOR TYPICAL COLUMN W/ STUDRAILS

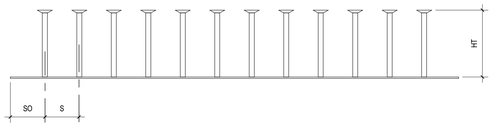

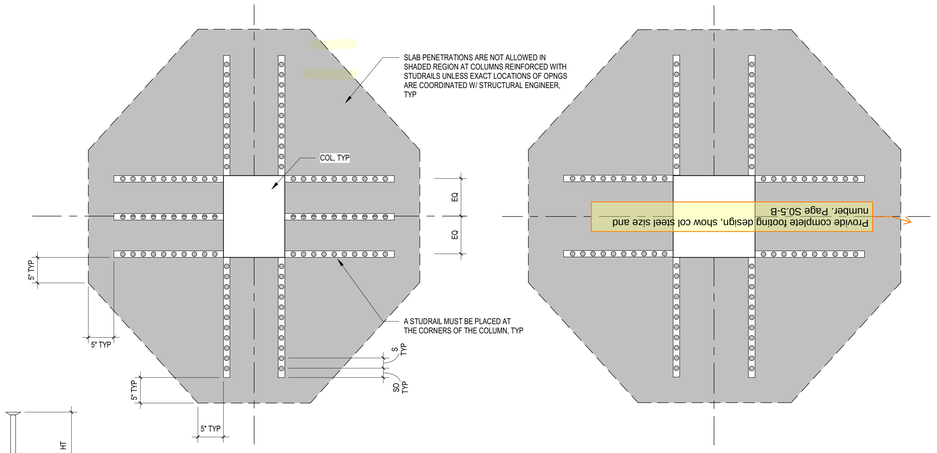

CONFIGURATON W/ (10) STUDRAILS

CONFIGURATON W/ (8) STUDRAILS

5 SCHEDULE

NTS

in site architects
1000 university ave. w. suite 130
st. paul, minnesota 55104
612-252-4820

NOTICE:
ATTENTION OF THIS DOCUMENT SHALL INVALIDATE THE ARCHITECT'S SEAL AND SIGNATURE. THE ARCHITECT'S THIS DOCUMENT DOES NOT DERIVE FROM RESERVED OWNERSHIP RIGHTS W.T. THIS DOCUMENT IS FOR USE ONLY FOR THE PROJECT IDENTIFIED IN IT. THE DOCUMENT IS NOT TO BE USED FOR REPAIR, REMODEL, OR ADDITION TO THIS PROJECT OR FOR ANY OTHER PROJECT.

WESLEY BRADLEY PARK 2
EAST BROWNSTONE
707 39TH AVENUE SE
PUYALLUP, WA 98374

PERMIT RESUBMITTAL
03/01/2024

ORIGINAL ISSUE: 08/17/16

REVISIONS

No.	Description	Date

2220236.20
PROJECT NUMBER

KJK DRAWN BY
ADM CHECKED BY

WESLEY BRADLEY PARK 2
EAST BROWNSTONE

CONCRETE SCHEDULES

S0.5-B

AHBL
TACOMA SEATTLE SPOKANE TRI-CITIES
2215 North 30th Street, Suite 300, Tacoma,WA 98403
253.383.2422 TEL 253.383.2572 FAX www.ahbl.com WEB

3/1/2024 7:20:32 PM

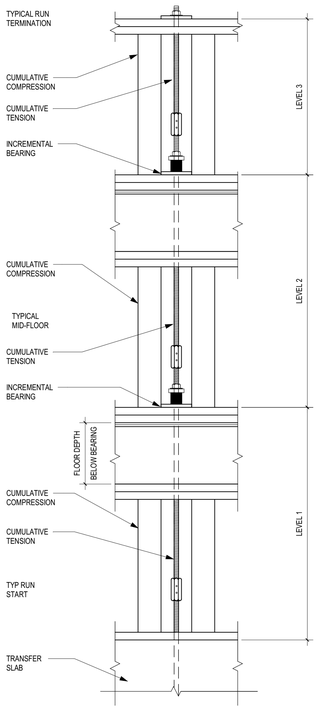

1 SCHEDULE

1" = 1'-0"

1A. PROJECT DETAILS

FLOOR CONSTRUCTION	SHRINKAGE PER FLOOR
WOOD TRUSS FLOOR	0.5 INCHES PER FLOOR

ANCHOR TIEDOWN SYSTEM GENERAL NOTES:

1 SIMPSON STRONG-TIE SHALL PROVIDE THE ANCHOR TIEDOWN SYSTEM TO MEET THE DESIGN FORCES AND ELONGATION LIMITS PROVIDED IN THE SIMPSON STRONG-TIE ATS RUN DESIGN TABLE AND ATS DETAILS PROVIDED ON THE STRUCTURAL DRAWINGS. ATS DRAWINGS AND CALCULATIONS SHALL BE PROVIDED FOR REVIEW AND APPROVAL.

2 SHEAR WALLS SHALL BE SUPPORTED WITH A BEARING PLATE AND NUT AT EVERY STORY LEVEL. SKIPPING SHEAR WALL OVERTURNING RESTRAINT AT ANY LEVEL IS NOT PERMITTED.

3 SHRINKAGE COMPENSATION DEVICES SHALL BE USED TO ACCOUNT FOR THE SHRINKAGE AT EACH LEVEL INDICATED IN THE PROJECT DETAILS TABLE.

4 ANCHOR BOLTS SHALL NOT BE IN CONTACT WITH PRESSURE TREATED WOOD (PTW). PTW PLATES SHALL HAVE OVERSIZE HOLES ¼ INCH MINIMUM AND 3/8 INCH MAXIMUM LARGER THAN ROD SIZE. AS AN ALTERNATE, THE ANCHOR SHALL BE GALVANIZED IN ACCORDANCE WITH ASTM A653.

5 DO NOT WELD PRODUCTS UNLESS THESE DRAWINGS SPECIFICALLY IDENTIFY A PRODUCT AS DO NOT WELD PRODUCTS UNLESS THESE DRAWINGS SPECIFICALLY IDENTIFY A PRODUCT AS SIMPSON STRONG-TIE. SOME STEELS HAVE POOR WELDABILITY AND A TENDENCY TO CRACK WHEN WELDED. CRACKED STEEL WILL NOT CARRY LOAD AND MUST BE REPLACED. NUTS AND COUPLER SHALL NOT BE WELDED.

6 IN THE EVENT OF A DISCREPANCY BETWEEN THESE STRUCTURAL DRAWINGS AND THE ATS DRAWINGS, THE STRUCTURAL DRAWINGS ALWAYS GOVERN.

7 THESE DRAWINGS ARE SPECIFIC TO ATS AND ARE NOT APPLICABLE TO OTHER MANUFACTURER TIEDOWN SYSTEMS. CONTRACTOR'S PROPOSED SUBSTITUTION OF OTHER MANUFACTURER'S CONNECTORS SHALL BE SUBMITTED TO THE STRUCTURAL ENGINEER AND BUILDING JURISDICTION FOR REVIEW AND WRITTEN APPROVAL PRIOR TO ORDERING AT THE EXPENSE OF THE CONTRACTOR. REQUESTS FOR SUBSTITUTION SHALL INCLUDE CURRENT ICC-ES EVALUATION REPORTS AND A LIST STATING THE PROPOSED ITEM-FOR-ITEM SUBSTITUTION HAS EQUIVALENT OR GREATER LOAD CAPACITY AND DEFLECTION LIMITATION. IN ADDITION, SUBSTITUTIONS SHALL COMPLY WITH CURRENT ICC-ES ACCEPTANCE CRITERIA FOR SHRINKAGE COMPENSATING DEVICES (AC316).

8 A PRE-CONSTRUCTION MEETING IS RECOMMENDED WITH SIMPSON STRONG-TIE PRIOR TO PLACEMENT OF THE CONCRETE TO ASSIST IN THE INSTALLATION PROCESS AND VERIFY QUANTITIES. TO COORDINATE THIS MEETING, CALL SIMPSON SALES AT 800-999-5099.

SIMPSON STRONG-TIE ATS RUN DESIGN NOTES:

1. SPECIFY "WB" FOR WOOD BEAM OR "SB" FOR STEEL BEAM IF RUN DOES NOT BEGIN ON CONCRETE. SEE DETAIL 4 / S0.07 FOR TYPICAL DETAIL AT RUN STARTS.
2. SPECIFY "TP" FOR TOP PLATES, "BB" FOR BRIDGE BLOCK OR "ST" FOR STRAPS. SEE DETAIL 2 / S0.07 FOR TYPICAL DETAIL AT RUN TERMINATIONS.
3. SEE PLANS FOR RUN MARK AND LOCATIONS.

1B. SIMPSON STRONG-TIE ATS RUN DESIGN

RUN MARK	RUN START (1)	CUMULATIVE TENSION LOADS...			CUMULATIVE COMPRESSION LOADS (KIPS)			WALL HEIGHT (FLOOR TO FLOOR)			FLOOR DEPTH (BELOW LEVEL)			ANCHOR DIAMETER	RUN TERMINATION (2)
		LEVEL 3	LEVEL 2	LEVEL 1	LEVEL 3	LEVEL 2	LEVEL 1	LEVEL 3	LEVEL 2	LEVEL 1	LEVEL 3	LEVEL 2	LEVEL 1		
HD1	CONCRETE	1.0K	2.2K	4.8K	3.K	7.0K	11.8K	9'-0 1/4"	11'-4"	11'-5 1/2"	2'-0 3/4"	2'-0 3/4"	N/A	3/4"	TP OR BB
HD2	CONCRETE	1.0K	2.2K	4.8K	4.3K	9.9K	16.5K	9'-0 1/4"	11'-4"	11'-5 1/2"	2'-0 3/4"	2'-0 3/4"	N/A	3/4"	TP OR BB
HD3	CONCRETE	2.0K	4.0K	6.3K	2.5K	5.9K	10.9K	9'-0 1/4"	11'-4"	11'-5 1/2"	2'-0 3/4"	2'-0 3/4"	N/A	3/4"	TP OR BB
HD4	CONCRETE	2.0K	4.0K	6.3K	4.5K	10.9K	18.7K	9'-0 1/4"	11'-4"	11'-5 1/2"	2'-0 3/4"	2'-0 3/4"	N/A	3/4"	TP OR BB
HD5	CONCRETE	2.8L	4.8K	7.9K	3.9K	9.0K	16.4K	9'-0 1/4"	11'-4"	11'-5 1/2"	2'-0 3/4"	2'-0 3/4"	N/A	3/4"	TP OR BB
HD6	CONCRETE	2.8K	4.8K	7.9K	6.3K	13.5K	22.2K	9'-0 1/4"	11'-4"	11'-5 1/2"	2'-0 3/4"	2'-0 3/4"	N/A	3/4"	TP OR BB
HD7	CONCRETE	3.2K	6.3K	9.9K	3.8K	8.5K	14.7K	9'-0 1/4"	11'-4"	11'-5 1/2"	2'-0 3/4"	2'-0 3/4"	N/A	3/4"	TP OR BB
HD8	CONCRETE	3.2K	6.3K	9.9K	6.3K	15.3K	24.2K	9'-0 1/4"	11'-4"	11'-5 1/2"	2'-0 3/4"	2'-0 3/4"	N/A	3/4"	TP OR BB
HD9	CONCRETE	3.7K	6.5K	11.7K	4.0K	9.8K	17.8K	9'-0 1/4"	11'-4"	11'-5 1/2"	2'-0 3/4"	2'-0 3/4"	N/A	3/4"	TP OR BB
HD10	CONCRETE	3.7K	6.5K	11.7K	6.6K	15.4K	24.6K	9'-0 1/4"	11'-4"	11'-5 1/2"	2'-0 3/4"	2'-0 3/4"	N/A	3/4"	TP OR BB
HD11	CONCRETE	3.6L	8.0K	12.8K	2.1K	5.2K	8.6K	9'-0 1/4"	11'-4"	11'-5 1/2"	2'-0 3/4"	2'-0 3/4"	N/A	3/4"	TP OR BB
HD12	CONCRETE	3.6K	8.0K	12.8K	4.6K	10.9K	17.5K	9'-0 1/4"	11'-4"	11'-5 1/2"	2'-0 3/4"	2'-0 3/4"	N/A	3/4"	TP OR BB
HD13	CONCRETE	4.2K	9.3K	15.4K	3.6K	8.8K	15.4L	9'-0 1/4"	11'-4"	11'-5 1/2"	2'-0 3/4"	2'-0 3/4"	N/A	3/4"	TP OR BB
HD14	CONCRETE	4.2K	9.3K	15.4K	4.5K	11.6K	19.8K	9'-0 1/4"	11'-4"	11'-5 1/2"	2'-0 3/4"	2'-0 3/4"	N/A	3/4"	TP OR BB
HD15	CONCRETE	4.6K	9.9K	16.6K	3.8K	8.6K	14.3K	9'-0 1/4"	11'-4"	11'-5 1/2"	2'-0 3/4"	2'-0 3/4"	N/A	3/4"	TP OR BB
HD16	CONCRETE	4.6K	10.4K	17.3K	3.9K	8.2K	13.5K	9'-0 1/4"	11'-4"	11'-5 1/2"	2'-0 3/4"	2'-0 3/4"	N/A	3/4"	TP OR BB
HD17	CONCRETE	4.5K	10.8K	18.0K	3.5K	8.2K	13.2K	9'-0 1/4"	11'-4"	11'-5 1/2"	2'-0 3/4"	2'-0 3/4"	N/A	3/4"	TP OR BB
HD18	CONCRETE	5.0K	11.6K	19.0K	3.7K	8.62K	13.7K	9'-0 1/4"	11'-4"	11'-5 1/2"	2'-0 3/4"	2'-0 3/4"	N/A	3/4"	TP OR BB

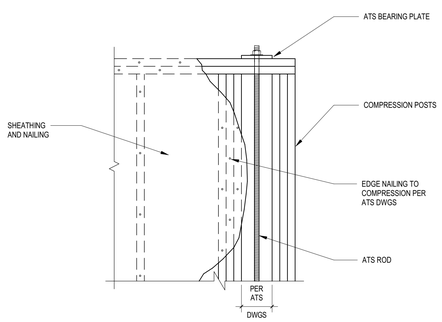

AT TOP PLATE DETAIL

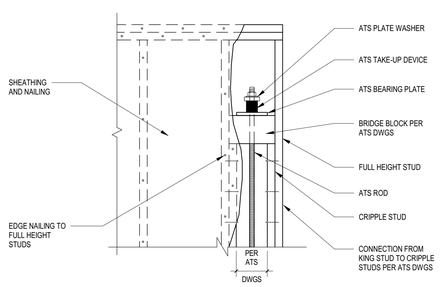

ALTERNATE BRIDGE BLOCK DETAIL

TYPICAL RUN TERMINATION DETAILS

2 SECTION

1" = 1'-0" S0.9-2

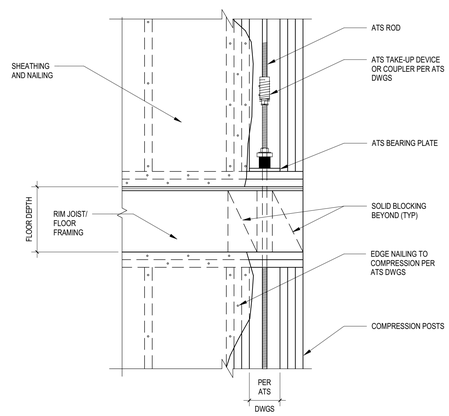

TYPICAL MID FLOOR DETAILS

3 SECTION

1" = 1'-0" S0.9-3

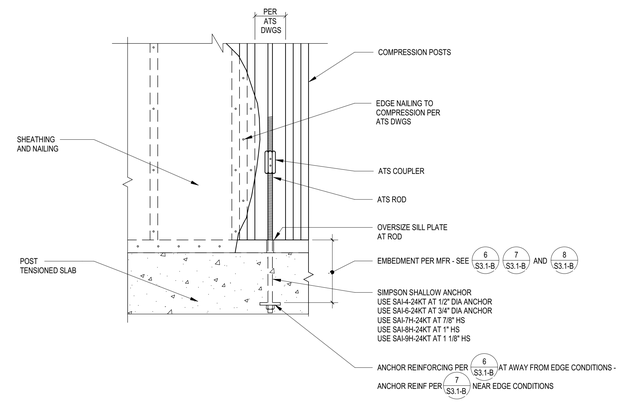

TYPICAL RUN START DETAIL

4 SECTION

1" = 1'-0" S0.9-4

in site architects
1000 university ave. w.# suite 130
st. paul, minnesota 55104
612-252-4820 #fax - 844-270-3946

I hereby certify that this document was prepared by me or under my direct supervision and that I am a duly licensed architect under the laws of the State of Washington

Typed or Printed Name

License # Date

WESLEY BRADLEY PARK 2
EAST BROWNSTONE
707 39TH AVENUE SE
PUYALLUP, WA 98374

PERMIT RESUBMITTAL 03/01/2024

ORIGINAL ISSUE: 01/10/20

REVISIONS

No.	Description	Date

AHBL
TACOMA SEATTLE SPOKANE TRI-CITIES
2215 North 30th Street, Suite 300, Tacoma,WA 98403
253.383.2422 TEL 253.383.2572 FAX www.ahbl.com WEB

2220236.20
PROJECT NUMBER

WESLEY BRADLEY PARK 2
EAST BROWNSTONE

WOOD SCHEDULES

S0.6–B

3/1/2024 7:20:38 PM

WOOD STUD SHEARWALL SCHEDULE

MARK	SHEATHING	NAILING SIZE	NAILING SPACING	STUD SIZE AT ADJOINING PANEL EDGES	BLOCKING SIZE	FOUNDATION SILL PL ATTACHMENT	2x BOTTOM PLATE ATTACHMENT TO WOOD BELOW	CLIP SPACING RIM/BLKG TO TOP PLATE	ASD ALLOWABLE UNIT SHEAR - SEISMIC	ASD ALLOWABLE UNIT SHEAR - WIND
W 6	15/32" APA RATED SHEATHING	10d COMMON (0.148" DIA x 2 1/4 MIN)	6" OC EDGES 12" OC FIELD	2x	2x FLAT OR 2x	3/4" DIA. AT 48" OC	16d AT 6" OC STAGGERED	SIMP A35 OR LTP4 AT 24"OC	310 PLF	435 PLF
W 4	15/32" APA RATED SHEATHING	10d COMMON (0.148" DIA x 2 1/4 MIN)	4" OC EDGES 12" OC FIELD	3x (12)	2x FLAT OR 3x (12)	3/4" DIA. AT 48" OC	(2) ROWS 16d AT 8" O.C. STAGGERED	SIMP A35 OR LTP4 AT 16"OC	460 PLF	645 PLF
W 3	15/32" APA RATED SHEATHING	10d COMMON (0.148" DIA x 2 1/4 MIN)	3" OC EDGES 12" OC FIELD	3x (12)	2x FLAT OR 3x (12)	3/4" DIA. AT 32" OC	(2) ROWS 16d AT 6" OC STAGGERED	SIMP A35 OR LTP4 AT 12"OC	600 PLF	840 PLF
W 2	15/32" APA RATED SHEATHING	10d COMMON (0.148" DIA x 2 1/4 MIN)	2" OC EDGES 12" OC FIELD	3x (12)	2x FLAT OR 3x (12)	3/4" DIA. AT 16" OC	(3) ROWS 16d AT 8" OC STAGGERED	SIMP A35 OR LTP4 AT 10"OC	770 PLF	1078 PLF
2W 6	15/32" APA RATED SHEATHING TWO SIDES OF WALL	10d COMMON (0.148" DIA x 2 1/4 MIN)	6" OC EDGES 12" OC FIELD	2x	2x FLAT OR 2x	3/4" DIA. AT 32" OC	(2) ROWS 16d AT 6" OC STAGGERED	SIMP A35 OR LTP4 AT 24"OC EA FACE	620 PLF	870 PLF
2W 4	15/32" APA RATED SHEATHING TWO SIDES OF WALL	10d COMMON (0.148" DIA x 2 1/4 MIN)	4" OC EDGES 12" OC FIELD	3x (12)	2x FLAT OR 3x (12)	3/4" DIA. AT 16" OC	(2) ROWS 16d AT 4" OC STAGGERED	SIMP A35 OR LTP4 AT 16"OC EA FACE	920 PLF	1290 PLF
2W 3	15/32" APA RATED SHEATHING TWO SIDES OF WALL	10d COMMON (0.148" DIA x 2 1/4 MIN)	3" OC EDGES 12" OC FIELD	3x (12)	2x FLAT OR 3x (12)	3/4" DIA. AT 16" OC	SEE DETAIL 2/S0.7	SIMP A35 OR LTP4 AT 12"OC EA FACE	1200 PLF	1680 PLF
2W 2	15/32" APA RATED SHEATHING TWO SIDES OF WALL	10d COMMON (0.148" DIA x 2 1/4 MIN)	2" OC EDGES 12" OC FIELD	3x (12)	2x FLAT OR 3x (12)	3/4" DIA. AT 8" OC	SEE DETAIL 2/S0.7	SIMP A35 OR LTP4 AT 10"OC EA FACE	1540 PLF	2155 PLF

APA RATED SHEATHING SHEARWALL NOTES

1. NAILS SHALL BE COMMON FROM AN AMERICAN OR CANADIAN MFR ONLY. MINIMUM NAIL PENETRATION INTO WOOD FRAMING SHALL BE 1 1/2" FOR 10d NAILS. UNLESS NOTED OTHERWISE, NAIL DIAMETERS AND LENGTHS SHALL BE PER NOTE 6.2.3 OF THE STRUCTURAL NOTES. GALVANIZED NAILS SHALL BE HOT DIPPED OR TUMBLED.
2. APA RATED SHEATHING MATERIAL MAY BE EITHER PLYWOOD OR ORIENTED STRAND BOARD CONFORMING TO DOC PS 1 OR PS 2. SHEATHING MAY BE ORIENTED EITHER HORIZONTALLY OR VERTICALLY.
3. SHEATHING PANELS SHALL NOT BE LESS THAN 4' x 8' EXCEPT AT SHEARWALL BOUNDARIES AND CHANGES IN FRAMING. ALL EDGES OF ALL PANELS SHALL BE SUPPORTED BY AND FASTENED TO FRAMING MEMBERS OR BLOCKING.
4. ALL INTERIOR SHEAR WALLS HAVE BEEN DESIGNATED. ALL EXTERIOR WALLS WITHOUT DESIGNATION SHALL BE TYPE W6. WHERE THE SHEARWALL HAS BEEN DESIGNATED ON THE PLANS TO EXTEND ALONG LENGTHS OF WALLS WITH PENETRATIONS, SHEATHING AND NAILING OF THAT TYPE SHALL BE REQUIRED ABOVE AND BELOW WALL OPENINGS. OTHERWISE, SHEATHING AND NAILING ABOVE AND BELOW OPENINGS MAY BE TYPE W6.
5. UNLESS NOTED OTHERWISE, THE SHEARWALL DESIGNATION APPLIES TO FULL EXTENT OF WALL BETWEEN CORNERS OF WALLS.
6. SHEARWALLS SHALL RUN CONTINUOUS THROUGH BREAKS CAUSED BY INTERSECTING WALLS.
7. WHEN SHEATHING IS REQUIRED ON ONE SIDE ONLY, PLACE ON THE SIDE OF THE SYMBOL. WHERE THE SHEATHING IS NOTED ON TWO SIDES OF THE WALL, STAGGER VERTICAL PANEL JOINTS SUCH THAT JOINTS ON OPPOSITE SIDES OF THE WALL DO NOT FALL ON THE SAME FRAMING MEMBER.
8. NAIL SPACING INDICATED ON SCHEDULE APPLIES TO ALL STUDS, TOP AND BOTTOM PLATES AND BLOCKING. NAIL SPACINGS OF 3" ON CENTER OR LESS AT ADJOINING PANEL EDGES SHALL BE STAGGERED. NAILS SHALL BE LOCATED AT LEAST 3/8" FROM PANEL EDGES.
9. PROVIDE SHEATHING EDGE NAILING TO ALL COLUMNS WITH HOLDOWNS AND STUDS ATTACHED TO STEEL TUBE COLUMNS.
10. HOT DIPPED GALVANIZED FASTENERS SHALL BE USED TO ATTACH TO ALL TREATED WOOD MEMBERS. ELECTROPLATED FASTENERS ARE NOT ACCEPTABLE.
11. SPACING OF WALL STUDS SHALL BE AS NOTED ON THE PLANS. SPACING OF STUDS SHALL NOT EXCEED 24" O.C.
12. WHERE NOTED, THE WIDTH OF THE NAILED FACE OF FRAMING MEMBERS AT ADJOINING PANEL EDGES SHALL BE 3" NOMINAL. TWO 2" NOMINAL FRAMING MEMBERS SHALL BE PERMITTED TO BE USED IN LIEU OF A SINGLE 3" NOMINAL MEMBER PROVIDED THE 2" NOMINAL MEMBERS ARE LAMINATED TOGETHER WITH NAILS OR BOLTS AS NOTED IN "2x BOTTOM PLATE ATTACHMENT TO WOOD BELOW" COLUMN IN SCHEDULE ABOVE.
13. ANCHOR BOLTS SHALL NOT BE SPACED GREATER THAN 48" OC, AND SHALL HAVE 7" MIN. EMBED. EXPANSION BOLTS SHALL HAVE 5" MIN EMBED. SEE DETAILS FOR TYPE OF CONNECTION REQUIRED. PROVIDE A MINIMUM OF (2) ANCHOR BOLTS PER PIECE, WITH ONE ANCHOR LOCATED NOT MORE THAN 12" OR LESS THAN 4" FROM EACH END OF EACH PIECE. AT NON-SHEAR WALLS, PROVIDE SPECIFIED ANCHOR BOLTS AT 48" OC MAX, UNLESS NOTED OTHERWISE.
14. FOUNDATION ANCHOR BOLTS SHALL HAVE A STEEL PLATE WASHER AT EA ANCHOR BOLT NO LESS THAN 0.229" x 3" x 3" IN SIZE. THE HOLE IN THE PLATE WASHER SHALL BE PERMITTED TO BE DIAGONALLY SLOTTED WITH A WIDTH OF UP TO 3/16" LARGER THAN THE BOLT DIAMETER AND A SLOT LENGTH NOT TO EXCEED 1 - 3/4", PROVIDED A STANDARD CUT WASHER IS PLACED BETWEEN THE PLATE WASHER AND THE NUT. THE PLATE WASHER SHALL EXTEND TO WITHIN 1/2" OF THE EDGE OF THE FOUNDATION SILL PLATE. SLOTTED PLATE WASHERS SHALL BE A MINIMUM 4" x 4" FOR 2x6 WALLS, AND 6" x 6" FOR 2x8 WALLS.
15. STANDARD CUT WASHERS MAY BE SUBSTITUTED IN LIEU OF PLATE WASHERS FOR ALL TYPE W6 WALLS LONGER THAN 10 FEET.
16. SIMPSON A35 CLIPS MAY BE OMITTED PER ALTERNATE CONNECTION SCHEDULE 2/S0.7.

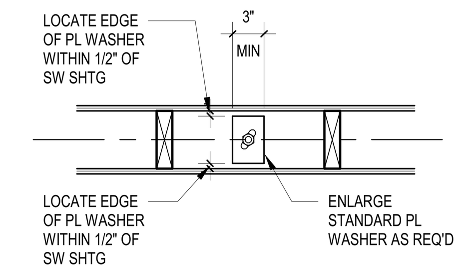

CONDITION AT WALLS SHEATHED BOTH SIDES

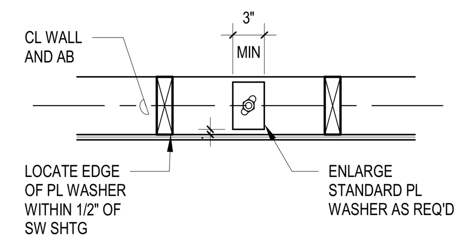

CONDITION AT 2x6 AND LARGER WALLS

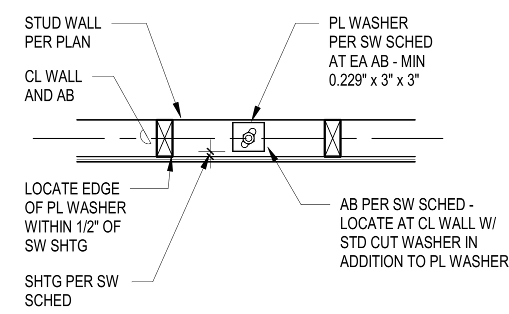

TYPICAL CONDITION

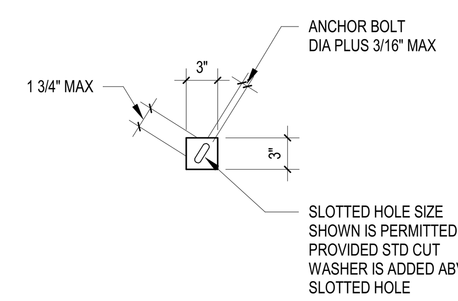

STANDARD (MINIMUM) PL WASHER

1 SCHEDULE

1" = 1'-0"

SHEARWALL CONNECTION SCHEDULE

MARK	SIMPSON A35 OPTION	SIMPSON SDWC OPTION	SIMPSON SDWH OPTION
W 6	A35 AT 24"OC	0.152 DIA AT 5" OC	0.276 DIA AT 12" OC
W 4	A35 AT 16"OC	0.152 DIA AT 3" OC	0.276 DIA AT 10" OC
W 3	A35 AT 12"OC	0.152 DIA AT 2 1/2" OC	0.276 DIA AT 8" OC
W 2	A35 AT 10"OC	0.152 DIA AT 2" OC	0.276 DIA AT 6" OC
2W 6	A35 AT 12"OC	0.152 DIA AT 2 1/2" OC	0.276 DIA AT 6" OC
2W 4	A35 AT 9"OC	0.152 DIA AT 1 1/2" OC	0.276 DIA AT 5" OC
2W 3	A35 AT 6"OC	N/A	0.276 DIA AT 4" OC
2W 2	N/A	N/A	0.276 DIA AT 3" OC

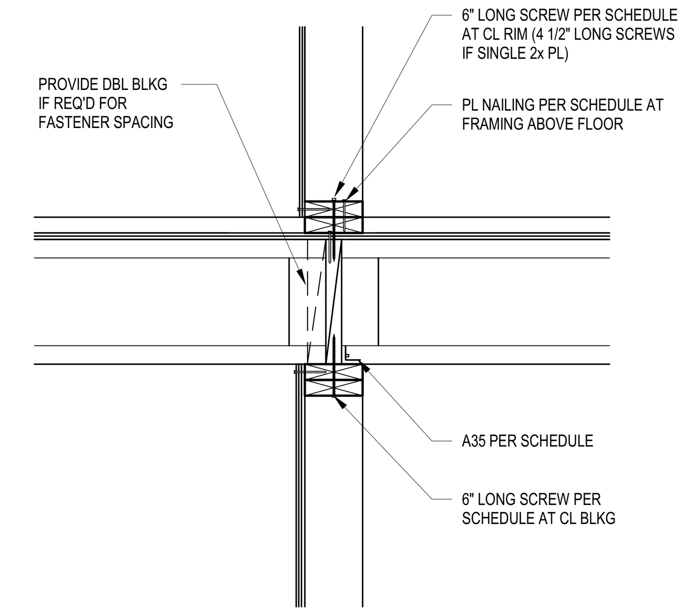

INTERIOR SHEARWALL CONDITION

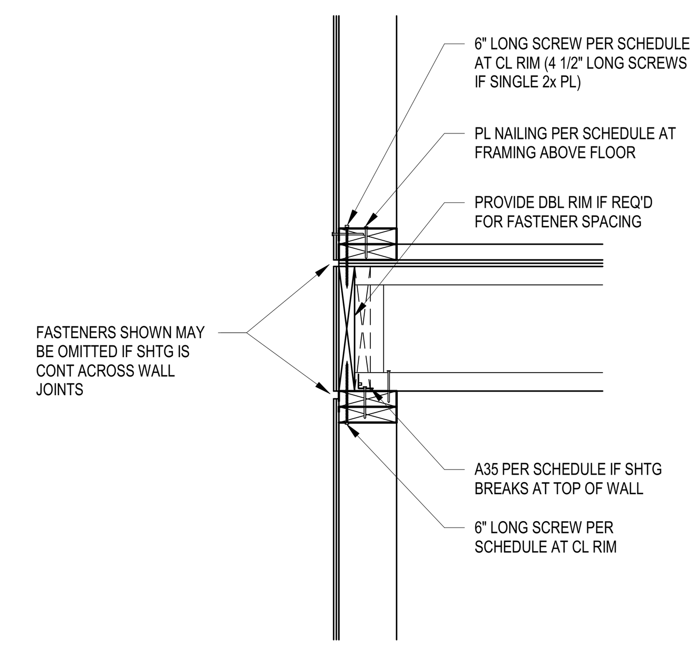

EXTERIOR SHEARWALL CONDITION

2 SCHEDULE

1" = 1'-0"

TYPICAL WOOD STUD WALL SCHEDULE

		LEVEL 1	LEVEL 2	LEVEL 3
BROWNSTONE	EXTERIOR WALL	2 x 6 DF #2 AT 16" OC	2 x 6 DF #2 AT 16" OC	2 x 6 DF #2 AT 16" OC
	CORRIDOR WALL	2 x 6 DF #2 AT 16" OC	2 x 6 DF #2 AT 16" OC	2 x 6 DF #2 AT 16" OC
	INTERIOR BEARING WALL	(2) 2 x 4 DF #2 AT 12" OC	(2) 2 x 4 DF #2 AT 16" OC	2 x 4 DF #2 AT 16" OC
	INTERIOR SHEAR WALL	2 x 4 DF #2 AT 16" OC	2 x 4 DF #2 AT 16" OC	2 x 4 DF #2 AT 16" OC
	INTERIOR PARTY WALL	(2) WALLS OF 2 x 4 DF #2 AT 16" OC	(2) WALLS OF 2 x 4 DF #2 AT 16" OC	(2) WALLS OF 2 x 4 DF #2 AT 16" OC

WOOD WALL SCHEDULE NOTES:

1. SEE PLANS FOR WALL TYPE AND LOCATIONS.
2. SEE DETAIL 9 / S0.8-B FOR TYPICAL WOOD BEARING WALL ELEVATION.

3 SCHEDULE

1" = 1'-0"

TYPICAL BUILT-UP STUD COL SCHEDULE

	LOCATION	OPENING SIZE	LEVEL 1	LEVEL 2	LEVEL 3
BROWNSTONE	EXTERIOR	4'-0" OR LESS	(2) FULL HT (2) BRG	(2) FULL HT (1) BRG	(2) FULL HT (1) BRG
		6'-0" OR LESS	(2) FULL HT (2) BRG	(2) FULL HT (2) BRG	(2) FULL HT (2) BRG
		8'-0" OR LESS	(3) FULL HT (3) BRG	(3) FULL HT (2) BRG	(3) FULL HT (2) BRG
		14'-0" OR LESS	(4) FULL HT (3) BRG	(4) FULL HT (2) BRG	(4) FULL HT (2) BRG
	INTERIOR	4'-0" OR LESS	(1) FULL HT (2) BRG	(1) FULL HT (1) BRG	(1) FULL HT (1) BRG
		6'-0" OR LESS	(2) FULL HT (2) BRG	(1) FULL HT (2) BRG	(1) FULL HT (2) BRG
		8'-0" OR LESS	(2) FULL HT (3) BRG	(2) FULL HT (2) BRG	(2) FULL HT (2) BRG
		14'-0" OR LESS	(3) FULL HT (3) BRG	(2) FULL HT (2) BRG	(2) FULL HT (2) BRG

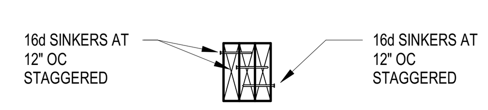

CONDITION AT BU COL

TYPICAL BUILT-UP COLUMN CONSTRUCTION

4 SCHEDULE

1" = 1'-0"

TYPICAL WOOD HEADER SCHEDULE

	LOCATION	OPENING SIZE	LEVEL 2	LEVEL 3	ROOF
BROWNSTONE	EXTERIOR	4'-0" OR LESS	(2) 2 x 8 DF #2	(2) 2 x 8 DF #2	(2) 2 x 8 DF #2
		6'-0" OR LESS	(3) 2 x 10 DF #2	(3) 2 x 10 DF #2	(2) 2 x 12 DF #2
		8'-0" OR LESS	6 x 10 DF #1	6 x 10 DF #1	(3) 2 x 12 DF #2
		14'-0" OR LESS	GL 5 1/2 x 9 1/2	GL 5 1/2 x 9 1/2	GL 5 1/2 x 12
	INTERIOR	4'-0" OR LESS	(2) 2 x 8 DF #2	(2) 2 x 8 DF #2	(2) 2 x 8 DF #2
		6'-0" OR LESS	(3) 2 x 12 DF #2	(3) 2 x 12 DF #2	(2) 2 x 12 DF #2
		8'-0" OR LESS	6 x 12 DF #1	6 x 12 DF #1	(3) 2 x 12 DF #2
		14'-0" OR LESS	GL 5 1/2 x 13 1/2	GL 5 1/2 x 13 1/2	GL 5 1/2 x 12

5 SCHEDULE

1" = 1'-0"

3/1/2024 7:20:38 PM

in site architects
1000 university ave. w. suite 130
st. paul, minnesota 55104
612-252-4820

ANDREW DEAN McEACHRAN STATE OF WASHINGTON 38722 PROFESSIONAL STRUCTURAL ENGINEER

NOTICE:
ALTERATION OF THIS DOCUMENT SHALL INVALIDATE THE PROFESSIONAL SEAL AND SIGNATURE. PUBLICATION OF THIS DOCUMENT DOES NOT DEROGATE FROM RESERVED OWNERSHIP RIGHTS IN IT. THIS DOCUMENT IS FOR USE ONLY FOR THE PROJECT IDENTIFIED IN THE TITLE BLOCK AND IS NOT TO BE USED FOR REPAIR, REMODEL OR ADDITION TO THAT PROJECT OR FOR ANY OTHER PROJECT.

WESLEY BRADLEY PARK 2
EAST BROWNSTONE
707 39TH AVENUE SE
PUYALLUP, WA 98374

PERMIT RESUBMITTAL 03/01/2024

ORIGINAL ISSUE: 01/10/19

REVISIONS

No. Description Date

2220236.20
PROJECT NUMBER

KJK DRAWN BY
ADM CHECKED BY

WESLEY BRADLEY PARK 2
EAST BROWNSTONE

AHBL
TACOMA SEATTLE SPOKANE TRI-CITIES
2215 North 30th Street, Suite 300, Tacoma,WA 98403
253.383.2422 TEL 253.383.2572 FAX www.ahbl.com WEB

WOOD SCHEDULES

S0.7-B

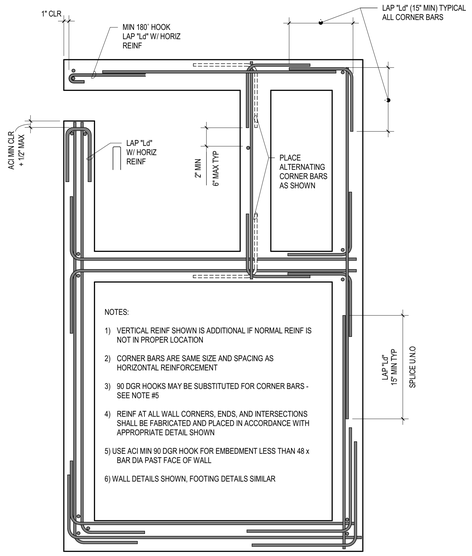

TYPICAL REINFORCEMENT PLACING DETAIL

1 TYPICAL

1" = 1'-0" 1 / S0.8-B

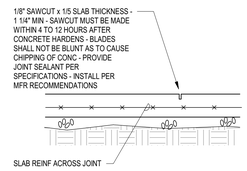

TYPICAL CONTROL JOINT

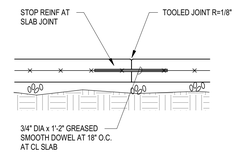

TYPICAL CONSTRUCTION JOINT

2 TYPICAL

1" = 1'-0" 2 / S0.8-B

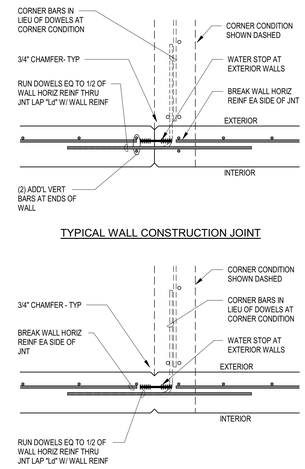

TYPICAL WALL CONSTRUCTION JOINT

TYPICAL WALL CONTROL JOINT

3 TYPICAL

1" = 1'-0" 3 / S0.8-B

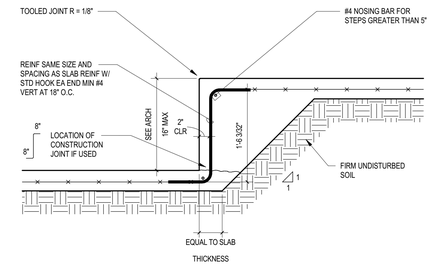

TYPICAL AT STEPS IN CONC SLAB ON GRADE

4 TYPICAL

1" = 1'-0" 4 / S0.8-B

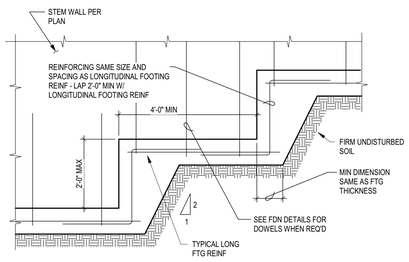

TYPICAL STEPPED FOOTING

5 TYPICAL

1" = 1'-0" 5 / S0.8-B

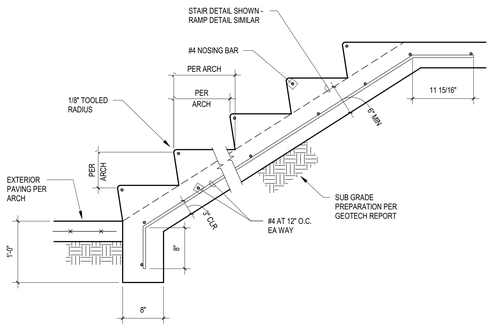

TYP CONCRETE STAIR CONSTRUCTION

6 TYPICAL

1" = 1'-0" 6 / S0.8-B

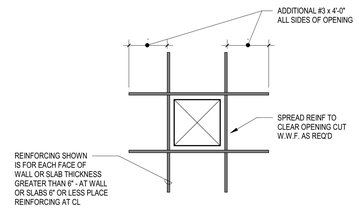

TYPICAL AT OPENINGS LESS THAN 12" IN CONC WALL OR SLAB

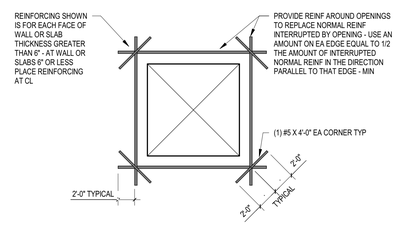

TYPICAL AT OPENINGS GREATER THAN 12" IN CONC WALL OR SLAB

7 TYPICAL

1" = 1'-0" 7 / S0.8-B

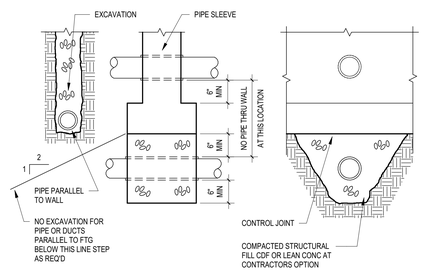

TYP DETAIL OF PIPE AT CONCRETE FTG

8 TYPICAL

1" = 1'-0" 8 / S0.8-B

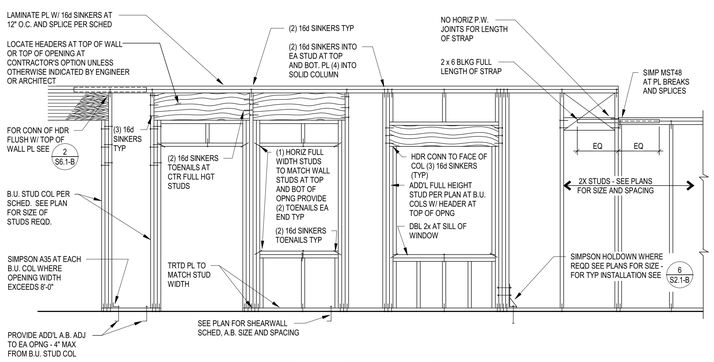

TYPICAL BEARING WALL ELEVATION

9 TYPICAL

1" = 1'-0" 9 / S0.8-B

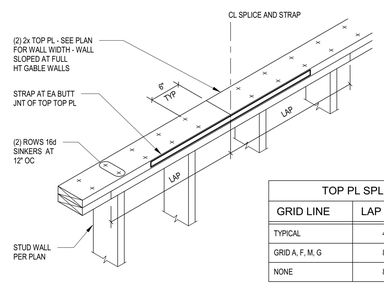

TOP PL SPLICE SCHEDULE		
GRID LINE	LAP LENGTH	STRAP
TYPICAL	4'-0" MIN	NONE
GRID A, F, M, G	8'-0" MIN	SIMP MSTA 36
NONE	8'-0" MIN	(2) SIMP MSTA 36

TYPICAL TOP PL SPLICE SCHEDULE

10 TYPICAL

1" = 1'-0" TYPICAL

3/1/2024 7:20:43 PM

in site architects
1000 university ave. w. suite 130
st. paul, minnesota 55104
612-252-4820

NOTICE:
ALTERATION OF THIS DOCUMENT SHALL INVALIDATE THE ARCHITECT'S OPINION AND SEAL. THE ARCHITECT'S SEAL ON THIS DOCUMENT DOES NOT DERIVE FROM RESERVED OWNERSHIP RIGHTS IN IT. THIS DOCUMENT IS FOR USE ONLY FOR THE PROJECT IDENTIFIED IN IT. IT IS NOT TO BE USED FOR ANY OTHER PURPOSE OR ON ANY OTHER PROJECT OR FOR ANY REPAIR, REMODEL, OR ADDITION TO THIS PROJECT OR FOR ANY OTHER PROJECT.

WESLEY BRADLEY PARK 2
EAST BROWNSTONE
707 39TH AVENUE SE
PUYALLUP, WA 98374

PERMIT RESUBMITTAL
03/01/2024

ORIGINAL ISSUE: 01/07/19

REVISIONS

No.	Description	Date

2220236.20
PROJECT NUMBER

KJK DRAWN BY
ADM CHECKED BY

WESLEY BRADLEY PARK 2
EAST BROWNSTONE

TYPICAL DETAILS

S0.8-B

AHBL
TACOMA SEATTLE SPOKANE TRI-CITIES
2215 North 30th Street, Suite 300, Tacoma,WA 98403
253.383.2422 TEL 253.383.2572 FAX www.ahbl.com WEB

FOUNDATION NOTES

1. SEE SHEETS S0.1-B - S0.2-B FOR STRUCTURAL NOTES, SEE SHEET S0.8-B FOR TYPICAL DETAILS, AND SHEETS S0.3-B - S0.4-B FOR TESTING AND INSPECTION NOTES.
2. SEE SHEET S0.5-B FOR FOOTING SCHEDULE AND FOR CONCRETE COLUMN SCHEDULE.
3. SEE ARCHITECTURAL / MECJANICAL DRAWINGS FOR DRAINS, SLOPES, AND OTHER FLOOR DEPRESSIONS NPT SHOWN.
4. SEE ARCHITECTURAL DRAWINGS FOR DIMENSIONS, ELEVATIONS, AND WALLS NOT SHOWN.
5. VERIFY ALL WINDOW AND DOOR WIDTHS AND HEIGHTS WITH ARCHITECTURAL DRAWINGS.
6. SEE ARCHITECTURAL DRAWINGS FOR STUD SIZE, SPACING, AND CALLOUTS AT NON-STRUCTURAL WALLS.
7. FOR TYPICAL CONNECTION OF NON-LOAD BEARING WALLS TO SLAB, USE POWDER ACTUATED FASTENERS AT 16" OC.
8. SEE GEOTECHNICAL ENGINEERING REPORT FOR ALL FOUNDATION AND SLAB SUPPORT REQUIREMENTS. THIS INCLUDES ALL EXCAVATION, FILL AND FILL PLACEMENT REQUIREMENTS.

FLOOR FRAMING NOTES - PT CONSTRUCTION

1. SEE SHEETS S4.1-B - S4.2-B FOR TYPICAL POST TENSION SLAB DETAILS.
2. VERIFY ALL TOP OF SLAB AND TOP OF WALL ELEVATIONS WITH ARCHITECTURAL DRAWINGS.
3. VERIFY ALL DOOR AND WINDOW WIDTHS AND HEIGHTS WITH ARCHITECTURAL DRAWINGS.
4. VERIFY SIZE AND LOCATION OF ALL MECHANICAL PENETRATIONS WITH ARCHITECTURAL AND MECHANICAL DRAWINGS. GC SHALL SUBMIT PENETRATION LAYOUT PER GENERAL NOTES.
5. TOP = TOP MAT, BOT = BOTTOM MAT, MID = MID-DEPTH.
6. ALL TENDON PROFILES NOTED ON THE PLANS ARE MEASURED FROM THE BOTTOM OF SLAB AT MID-SPAN TO THE CENTER OF STRAND.
7. CONTRACTOR SHALL VERIFY ALL DIMENSIONS, INCLUDING SLAB ELEVATIONS AND DOOR AND WINDOW WIDTHS AND HEIGHTS, WITH ARCHITECTURAL DRAWINGS AND NOTIFY ARCHITECT OF ANY DISCREPANCIES.
8. SEE DETAIL 1 / S0.6-B FOR STUDRAIL REQUIREMENTS.
9. SEE DETAIL 3 / S0.5-B FOR REQUIRED LAP LENGTHS AND REINFORCING BAR DEVELOPMENT LENGTHS.
10. SEE DETAIL 2 / S4.2-B FOR REQUIREMENTS AT HORIZONTAL TENDON CURVES.
11. SEE DETAIL 7 / S4.1-B FOR TYPICAL PT TENDON AND MILD STEEL PLACEMENT AND RELATIONSHIPS.
12. SEE DETAIL 5 / S4.2-B FOR METHOD OF MARKING PT LOCATIONS.
13. SEE SHEET 1 / S0.5-B FOR COLUMN TYPES AND REINFORCING REQUIREMENTS.
14. SEE DETAIL 1 / S4.1-B FOR PT ENCAPSULATION REQUIREMENTS.
15. SEE DETAIL 4 / S4.2-B FOR PENETRATION REQUIREMENTS NEAR TENDON ANCHORS.
16. SEE DETAIL 3 / S4.2-B FOR HORIZONTAL AND VERTICAL TENDON PLACEMENT AT ADDED TENDON ANCHORAGE.
17. ATTACH NON STRUCTURAL WALLS TO FLOOR PER DETAIL 1 / S3.2-B.

FLOOR FRAMING NOTES - WOOD TRUSS CONSTRUCTIION

1. SEE S0.7-B FOR WOOD FRAMING SCHEDULES.
2. ALIGN BEAMS SHALL HAVE 0" CAMBER UNLESS NOTED OTHERWISE.
3. ALIGN TRUSSES WITH STUDS BELOW WHERE SPACINGS ARE EQUAL
4. VERIFY ALL TOP OF BEAM AND TOP OF WALL ELEVATIONS WITH ARCHITECTURAL DRAWINGS.
5. VERIFY ALL DOOR AND WINDOW WIDTHS AND HEIGHTS WITH ARCHITECTURAL DRAWINGS.
6. VERIFY SIZE AND LOCATION OF ALL MECHANICAL PENETRATIONS WITH ARCHITECTURAL AND MECHANICAL DRAWINGS.
7. ALL SAWN HEADERS SHOWN SHALL BE DF No. 1 UNLESS NOTED OTHERWISE.
8. .ALL PRE-ENGINEERED JOIST SPACINGS SHALL BE 2'-0" EXCEPT AS SHOWN OR NOTED.
9. TRUSS MANUFACTURER SHALL SUBMIT CERTIFICATION THAT TRUSES DESIGNED AND INSTALLED AS INDICATED IN THE ARCHITECTURAL, STRUCTURAL, AND SHOP DRAWINGS RESULT IN A FLOOR SYSTEM WITH AN ACCEPTABLE VIBRATION PERCEPTIBILITY PERFORMANCE.
10. TRUSS MANUFACTURER SHALL SUBMIT CERTIFICATION THAT TRUSSES DESIGNED AND INSTALLED AS INDICATED IN THE ARCHITECTURAL, STRUCTURAL, AND SHOP DRAWINGS RESULT IN A FLOOR SYSTEM WITH AN ACCEPTABLE VIBRATION PERCEPTIBILITY PERFORMANCE.
11. ATTACH NON STRUCTURAL WALLS TO FLOOR PER DETAIL 4 /S6.1-B AND 5 /S6.1-B.
12. UNLESS NOTED OTHERWISE, SHEATHING SHALL BE UNBLOCKED AND ORIENTED WITH LONG EDGE OF PANEL (OR FACE GRAIN IF PLYWOOD IS USED) PERPENDICULAR TO SUPPORTS. PANELS SHALL BE STAGGERED WITH OFFSET JOINTS OCCURRING OVER SUPPORTS. MINIMUM SHEATHING DIMENSION PERPENDICULAR TO SUPPORTS SHALL BE 24" UNLESS EDGES OF PANEL ARE BLOCKED.
13. GYPCRETE (OR EQUIVALENT) TOPPING IS A NON-STRUCTURAL FLOOR FINISH PRODUCT, AND HAS NOT BEEN SPECIFIED OR DESIGNED BY THE STRUCTURAL ENGINEER OF RECORD. THE MATERIAL IS SHOWN ON THESE DRAWINGS SOLELY FOR THE PURPOSE OF ITS INCLUSION IN THE DESIGN OF FLOOR JOISTS. THE ENGINEER OF RECORD ACCEPTS NO RESPONSIBILITY FOR THE APPROPRIATENESS, DESIGN, OR PROPER INSTALLATION OF THE TOPPING.

14 SEE THE SHEARWALL SCHEDULE FOR SHEATHING, NAILING AND ANCHOR BOLT REQUIREMENTS AT ALL WALLS INDICATED AS SHEARWALLS, EXTENT OF THE SHEARWALL REQUIREMENTS INCLUDE THE TOTAL LENGTH OF THE WALL INCLUDING ABOVE AND BELOW WINDOWS AND DOORS UNLESS NOTED OTHERWISE.

15 ALL LOAD BEARING WALL STUDS SHALL BE COVERED WITH A MIN. OF 1/2" SHEATHING (EITHER GWB, PW, OR OSB AS APPLICABLE) (1) SIDE OF STUDS. SEE ARCHTIECTURAL DRAWINGS FOR ADDITIONAL WALL COVERING REQUIREMENTS.

16 ALL 2x STUDS SHALL BE CONTINUOUS BETWEEN DETAIL CUTS. POSITION BUILT-UP STUDS TO ALIGN WITH THE TRUSSES ABOVE.

17 FOR TYPICAL CONNECTION OF NON-LOAD BEARING WALLS TO SLAB, USE POWDER ACTUATED FASTENERS AT 16" OC.

ROOF FRAMING NOTES - WOOD TRUSS CONSTRUCTION

1. ALL BEAMS SHALL HAVE 0" CAMBER UNLESS NOTED OTHERWISE.
2. VERIFY ALL TOP OF BEAM AND TOP OF WALL ELEVATIONS WITH ARCHITECTURAL DRAWINGS.
3. VERIFY ALL DOOR AND WINDOW WIDTHS AND HEIGHTS WITH ARCHITECTURAL DRAWINGS.
4. VERIFY SIZE AND LOCATION OF ALL MECHANICAL PENETRATIONS WITH ARCHITECTURAL AND MECHANICAL DRAWINGS.
5. ALL SHADED AREAS SHALL BE OVERFRAMING AT 24" OC BY TRUSS MANUFACTURER.
6. BOTTOM CHORD ELEVATIONS MAY VARY. SEE ARCHITECTURAL DRAWINGS.
7. ALL SAWN HEADERS SHOWN SHALL BE DF No. 1 UNLESS NOTED OTHERWISE.
8. ALIGN WOOD TRUSSES WITH STUDS BELOW WHERE SPACINGS ARE EQUAL.
9. ATTACH NON-STRUCTURAL WALLS TO ROOF PER SHEET S7.1-B.
10. FOR SPECIAL NOTES REGARDING PRE-ENGINEERED METAL-PLATE-CONNECTION WOOD TRUSS DESIGN, COORDINATION AND FABRICATION, SEE "PRE-ENGINEERED METAL-PLATE-CONNECTION WOOD TRUSS NOTES."
11. ALL PRE-ENGINEERED WOOD TRUSS SPACINGS SHALL BE 2'-0" OC UNLESS NOTED OTHERWISE.

PRE-ENGINEERED METAL-PLATE-CONNECTED WOOD TRUSS NOTES

1. THE TRUSS ENGINEER SHALL BE A PROFESSIONAL ENGINEER LICENSED IN THE STATE OF THE PROJECT.
2. THE TRUSS SHOP DRAWINGS SHALL INCLUDE A TRUSS PLACEMENT DIAGRAM AND TRUSS DESIGN DRAWINGS. THE TRUSS PLACEMENT DIAGRAM SHALL SHOW EACH TRUSS, TEMPORARY AND PERMANENT BRACING REQUIREMENTS INCLUDING PLACEMENT AND CONNECTION DETAILS, TRUSS TO TRUSS CONNECTION DETAILS AND REQUIRED HARDWARE, AND OVERFRAMING PLACEMENT AND CONNECTION DETAILS. TRUSS DESIGN DRAWING SHALL BE SEALED BY THE TRUSS ENGINEER AND SHALL INCLUDE SLOPE, DEPTH, SPAN AND SPACING; LOCATION OF JOINTS AND SUPPORTS; NUMBER OF PILES; REQUIRED BEARING WIDTHS; DESIGN LOADS; DESIGN ADJUSTMENT FACTORS; REACTIONS; CONNECTOR NUMBER, TYPE AND SIZE; SIZE, SPECIES AND GRADE FOR EACH MEMBER; TRUSS TO TRUSS CONNECTIONS; MAXIMUM DEFLECTIONS FOR LIVE AND TOTAL LOAD; MAXIMUM AXIAL TENSION AND COMPRESSION FORCES IN EACH MEMBER; AND REQUIRED PERMANENT INDIVIDUAL TRUSS MEMBER RESTRAINT/BRACING AND THE METHOD AND DETAILS OF RESTRAINT/BRACING. SHOP DRAWINGS MAY CONTAIN THE MANUFACTURER'S ENGINEERING RESPONSIBILITY LIMITATIONS. HOWEVER, THE SHOP DRAWINGS SHALL MAKE NO STATEMENT AS TO ENGINEER OF RECORD RESPONSIBILITIES.
3. ALL ROOF TRUSSES SHALL BE DESIGNED UNDER THE DIRECT SUPERVISION OF THE THE PRE-ENGINEERED TRUSS ENGINEER.
4. ROOF TRUSSES SHALL BE PROVIDED TO COMPLETE THE ROOF FRAMING FROM THE ROOF SHEATHING TO THE SUPPORTING STRUCTURE BELOW.
5. WHERE TRUSSES ARE NOT PROVIDED TO COMPLETE THE ROOF SYSTEM, OVERFRAMING MEMBERS AND THEIR CONNECTIONS SHALL BE PROVIDED. OVERFRAMING DETAILS SHALL BE INCLUDED IN THE TRUSS DESIGN DRAWINGS. IN ORDER TO PROVIDE LOADING CONDITIONS CONSISTENT WITH THE MODELING OF THE TRUSSES, THE OVERFRAMING AND RELATED DETAILS SHALL BE DESIGNED UNDER THE DIRECTION OF THE TRUSS ENGINEER.
6. TRUSS LOCATIONS ARE SCHEMATICALLY SHOWN ON THE PLANS. IT IS NOT THE INTENT OF THE PLANS TO GRAPHICALLY LOCATE ALL FRAMING MEMBERS EXCEPT WHERE SPECIFICALLY INDICATED. THE GENERAL CONTRACTOR SHALL BE RESPONSIBLE FOR CHECKING THE TRUSS SHOP DRAWINGS FOR MEMBER LAYOUT, CONTRACTIBILITY, AND QUANTITY TAKEOFFS.
7. ALL TRUSS TO TRUSS CONNECTIONS SHALL BE DESIGNED BY THE TRUSS ENGINEER AND SHOWN IN THE TRUSS DESIGN DRAWINGS,
8. THE TRUSS ENGINEER SHALL VERIFY TRUSS BEARING CAPACITY ON HEM-FIR NO. 2 PLATES.
9. WHERE TRUSSES ALIGN WITH SHEARWALLS, A SPECIAL TRUSS SHALL BE PROVIDED THAT HAS BEEN DESIGNED BY THE TRUSS ENGINEER TO TRANSFER THE SPECIFIC WIND OR SEISMIC LOAD SHOWN ON THE PLANS. THE TRUSS SHALL BE DESIGNED TO TRANSFER THE LOAD BETWEEN THE ROOF SHEATHING OR DECKING AND THE SHEARWALL BELOW. THE TRUSS SHALL BE DESIGNED TO TRANSFER A MINIMUM OF 150 PLF ALONG THE LENGTH OF THE TRUSS. THE SPECIAL TRUSS SHALL BE DESIGNED CONSIDERING THE ACTUAL SUPPORT CONDITIONS AS SHOWN ON THE PLANS - HORIZONTAL REACTIONS SHALL BE RESISTED ONLY BY LATERAL FORCE RESISTING ELEMENTS SUCH AS SHEARWALLS.
10. ALL PERMANENT INDIVIDUAL TRUSS MEMBER RESTRAINT/BRACING REQUIRED FOR THE STABILITY OF THE TRUSS ELEMENTS UNDER GRAVITY LOADS, IN-PLANE WIND OR SEISMIC LOADS, AND WIND UPLIFT LOADS SHALL BE DESIGNED BY THE TRUSS ENGINEER. WHERE THE TOP CHORD IS NOT DIRECTLY ATTACHED TO THE ROOF SHEATHING, THE TRUSS ENGINEER SHALL DESIGN AND SHOW THE PLACEMENT OF ALL REQUIRED TOP CHORD BRACING AND CONNECTIONS ON THE TRUSS SHOP DRAWINGS. ANY BRACING LOADS TRANSFERRED TO THE MAIN BUILDING SYSTEM SHALL BE IDENTIFIED AND SUBMITTED TO THE ENGINEER OF RECORD FOR REVIEW.
11. THE GENERAL CONTRACTOR SHALL PROVIDE TEMPORARY INSTALLATION, RESTRAINT/BRACING IN ACCORDANCE WITH BCSI-2008 BUILDING COMPONENT SAFETY INFORMATION - GUIDE TO GOOD PRACTICE FOR HANDLING, INSTALLING, RESTRAINING AND BRACING OF METAL-PLATE-CONNECTED WOOD TRUSSES.
12. FOR TRUSSES SPANNING 60-FEET OR GREATER, THE GENERAL CONTRACTOR SHALL CONTRACT WITH A PROFESSIONAL ENGINEER LICENSED IN THE STATE OF THE PROJECT FOR THE DESIGN OF BOTH TEMPORARY INSTALLATION RESTRAING/BRACING AND PERMANENT INDIVIDUAL TRUSS MEMBER RESTRAINT/BRACING.

WALL LEGEND:

W 6 — SHEARWALL - REFER TO SHEARWALL SCHEDULE ON SHEET S0.7-B.

W 6 FT — FORCE TRANSFER SHEARWALL - SHEATHING, NAILING AND BLOCKING SPECIFIED IN THE SHEARWALL SCHEDULE SHALL BE PROVIDED ABOVE AND BELOW OPENINGS FOR LENGTH INDICATED. SEE DETAIL 8 / S6.1-B FOR STRAPPING AND NAILING REQUIREMENTS AT OPENINGS.

W 6 P — PERFORATED SHEARWALL - SHEATHING, NAILING AND BLOCKING SPECIFIED IN THE SHEARWALL SCHEDULE SHALL BE PROVIDED ABOVE AND BELOW OPENINGS FOR LENGTH INDICATED.

WOOD STUD FRAMED WALL ORIGINATING ON FOUNDATION OR FLOOR FRAMING PLAN ON WHICH IT IS NOTED. SEE DETAIL 9 / S0.8-B FOR REQUIREMENTS, SEE WOOD WALL SCHEDULE ON SHEET S0.7-B FOR STUD SIZE AND SPACING.

COLUMN ORIGINATING ON FOUNDATION OR FLOOR FRAMING PLAN ON WHICH IT IS NOTED. COLUMNS SHALL BE (3) BUILT-UP STUDS UNLESS NOTED OTHERWISE. SEE BUILT-UP STUD COLUMN SCHEDULE FOR STUDS REQUIRED EACH SIDE OF OPENINGS.

WALL BELOW FLOOR OR ROOF FRAMING PLAN ON WHICH IT IS NOTED - SEE PLAN BELOW FOR REQUIREMENTS.

6 x 8 — COLUMN BELOW WITH HEADER SUPPORTING FLOOR OR ROOF FRAMING ON THE LEVEL ON WHICH IT IS NOTED - SEE PLAN BELOW FOR COLUMN REQUIREMENTS.

HD# — INDICATES ANCHOR TIE DOWN TYPE TYPE - REFER TO ANCHOR TIE DOWN SCHEDULE AND DETAILS ON SHEET S0.6-B.

WOOD STRUCTURAL WALL WITH BRICK VENEER. SEE SECTION 4.9 OF THE STRUCTURAL NOTES AND PROJECT SPECIFICATIONS FOR VENEER ATTACHMENT REQUIREMENTS.

CONC WALL - SEE PLAN AND DETAILS FOR REINFORCING REQUIREMENTS

CMU WALL PER PLAN - SEE SHEET S5.1-B FOR DETAILS.

PT LEGEND:

31* 1 #T — PT TENDON

PROFILE POINT - NUMBER INDICATES DISTANCE FROM SLAB SOFFIT TO CGS OF TENDON

T — # T INDICATES NUMBER OF TENDONS IN BAND

* — INDICATES PROFILE POINT IS MEASURED FROM BEAM OR DROP PANEL SOFFIT TO CGS OF TENDON

4 1 — STRESSING END OF TENDON

4 1 — DEAD END OF TENDON

KEY TO ABBREVIATIONS

AB	ANCHOR BOLT	L	ANGLE
ABV	ABOVE	LLH	LONG LEG HORIZONTAL
ADDL	ADDITIONAL	LLV	LONG LEG VERTICAL
ADJ	ADJACENT	LOC	LOCATION
AFF	ABOVE FINISH FLOOR	LONGIT	LONGITUDINAL
ALT	ALTERNATE	MAX	MAXIMUM
ARCH	ARCHITECTURAL, ARCHITECT	MB	MACHINE BOLT
ASD	ALLOWABLE STRESS DESIGN	MECH	MECHANICAL
BEL	BELOW	MFR	MANUFACTURER
BLKG	BLOCKING	MIN	MINIMUM
BM	BEAM	MIW	MALLEABLE IRON WASHER
BNDY	BOUNDARY	NS	NEAR SIDE
BOT	BOTTOM	NTS	NOT TO SCALE
BRG	BEARING	NWT	NORMAL WEIGHT
BS	BOTH SIDES	O/	OVER
BTWN	BETWEEN	OC	ON CENTER
BU	BUILT UP	O.F.	OUTSIDE FACE
CIP	CAST IN PLACE	OPP	OPPOSITE HAND
CJ	CONSTRUCTION/CONTROL JOINT	OPNG	OPENING
CL	CENTERLINE	OSB	ORIENTED STRAND BOARD
CLG	CEILING	PC	PRE-CAST
CLR	CLEAR	PDF	POWER DRIVEN FASTENERS, PAF
CMU	CONCRETE MASONRY UNIT	PAF	POWER ACTUATED FASTENERS, PDF
COL	COLUMN	PERP	PERPENDICULAR
CONC	CONCRETE	PL	PLATE
CONN	CONNECT, CONNECTION	PLF	POUNDS PER LINEAR FOOT
CONT	CONTINUOUS	PNL	PANEL
COORD	COORDINATE	PRE-ENGR	PRE-ENGINEERED
CSK	COUNTERSINK	PROV	PROVIDE
CTR	CENTER	PT	POST TENSIONED
CVR	COVER	PW	PLYWOOD
DEG	DEGREE	REF	REFERENCE
DIA	DIAMETER	REINF	REINFORCE, REINFORCEMENT
DBL	DOUBLE	REQ'D	REQUIRED
EA	EACH	RF	ROOF
EF	EACH FACE	SCHED	SCHEDULE
ELEV	ELEVATION, ELEVATOR	SFRS	SEISMIC FORCE RESISTING SYSTEM
EMB	EMBEDMENT	SHTG	SHEATHING
ENGR	ENGINEER	SIM	SIMILAR
EQ	EQUAL/EQUIVALENT	SIMP	SIMPSON STRONG-TIE
EQUIV	EQUIVALENT	SOG	SLAB ON GRADE
ES	EACH SIDE	SPCG	SPACING
EW	EACH WAY	SQ	SQUARE
(E)	EXISTING	STD	STANDARD
EXP	EXPANSION	STIFF	STIFFENER
EXT	EXTERIOR	SW	SHEARWALL
FDN	FOUNDATION	T&G	TONGUE AND GROOVE
FF	FINISH FLOOR	THK	THICK
FFE	FINISH FLOOR ELEVATION	THRD	THREADED
FOC	FACE OF CONCRETE	T.O.	TOP OF
FOM	FACE OF MASONRY	TOC	TOP OF CONCRETE
FOS	FACE OF STUD	TOF	TOP OF FOOTING
FS	FAR SIDE	TOPL	TOP OF PLATE
FTG	FOOTING	TOS	TOP OF STEEL
GA	GAGE	T.O.W.	TOP OF WALL
GALV	GALVANIZED	TRANSV	TRANSVERSE
GC	GENERAL CONTRACTOR	TRTD	TREATED
GL	GLUE LAMINATED	TYP	TYPICAL
GWB	GYPSUM WALL BOARD	UNO	UNLESS NOTED OTHERWISE
HGR	HANGER	VFY	VERIFY
HORIZ	HORIZONTAL	VERT	VERTICAL
HSS	HOLLOW STEEL SECTION	W/	WITH
HT	HEIGHT	W/O	WITHOUT
I.F.	INSIDE FACE	WF	WIDE FLANGE
INT	INTERIOR	WHS	WELDED HEADED STUD
JNT	JOINT	WP	WORK POINT
JST	JOIST	WTS	WELDED THREADED STUD
K, KIPS	KIPS=1000 LBS	WWF	WELDED WIRE FABRIC

in site architects
1000 university ave. w. suite 130
st. paul, minnesota 55104
612-252-4820

ANDREW DEAN McEACHERN
STATE OF WASHINGTON
38722
PROFESSIONAL STRUCTURAL ENGINEER

NOTICE:
ALTERATION OF THIS DOCUMENT SHALL INVALIDATE THE PROFESSIONAL SEAL AND SIGNATURE. PUBLICATION OF THIS DOCUMENT DOES NOT DEROGATE FROM RESERVED OWNERSHIP RIGHTS IN IT. THIS DOCUMENT IS FOR USE ONLY FOR THE PROJECT IDENTIFIED IN THE TITLE BLOCK AND IS NOT TO BE USED FOR REPAIR, REMODEL OR ADDITION TO THAT PROJECT OR FOR ANY OTHER PROJECT.

WESLEY BRADLEY PARK 2
EAST BROWNSTONE
707 39TH AVENUE SE
PUYALLUP, WA 98374

PERMIT
RESUBMITTAL
03/01/2024

ORIGINAL ISSUE: 08/17/16

REVISIONS

No.	Description	Date

AHBL
TACOMA SEATTLE SPOKANE TRI-CITIES
2215 North 30th Street, Suite 300, Tacoma,WA 98403
253.383.2422 TEL 253.383.2572 FAX www.ahbl.com WEB

2220236.20
PROJECT NUMBER

KJK
DRAWN BY

ADM
CHECKED BY

WESLEY BRADLEY PARK 2
EAST BROWNSTONE

FRAMING NOTES

S0.9-B

3/1/2024 7:20:50 PM

GENERAL PLAN NOTES

1. SEE SHEET S0.1-B AND S0.2-B FOR STRUCTURAL NOTES.
2. SEE SHEET S0.8-B FOR TYPICAL DETAILS.
3. SEE SHEETS S0.3-B AND S0.4-B FOR STRUCTURAL NOTES.
4. SEE SHEETS S0.5-B THRU S0.7-B FOR SCHEDULES.
5. SEE SHEET S0.9-B FOR FRAMING NOTES AND LEGENDS.

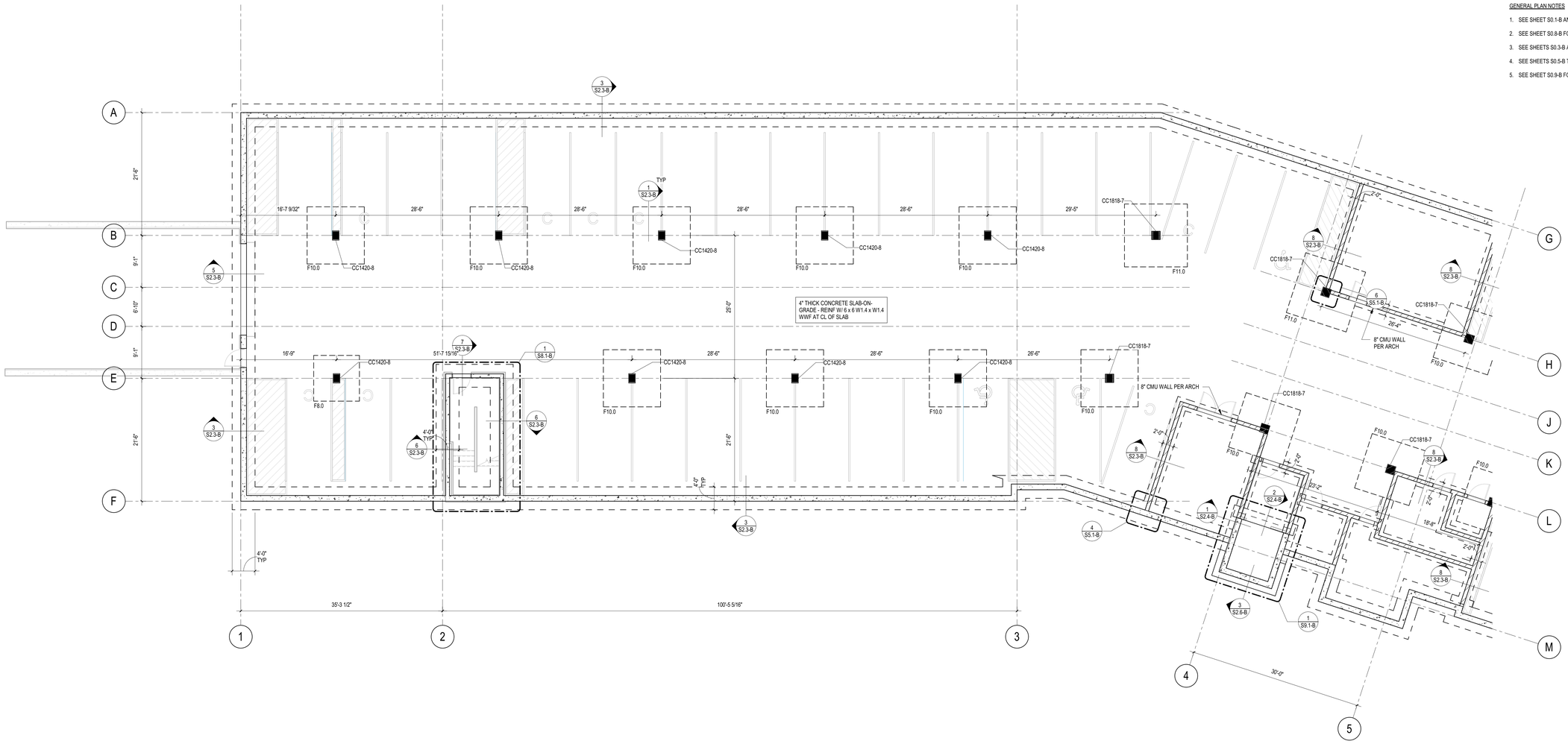

1 LEVEL 0 FOUNDATION PLAN - NORTH

1/8" = 1'-0"

SCALE IN FEET

in site architects
1000 university ave. w. suite 130
st. paul, minnesota 55104
612-252-4820

NOTICE:
ALTERATION OF THIS DOCUMENT SHALL INVALIDATE THE ARCHITECT'S OPINION AND SEAL ON THIS DOCUMENT. THIS DOCUMENT DOES NOT DERIVE FROM RESERVED OWNERSHIP RIGHTS W.P. THIS DOCUMENT IS FOR USE ONLY FOR THE PROJECT IDENTIFIED IN THE TITLE BLOCK AND MAY NOT BE USED FOR REPAIR, REMODEL, OR ADDITION TO THIS PROJECT OR FOR ANY OTHER PROJECT.

WESLEY BRADLEY PARK 2
EAST BROWNSTONE
707 39TH AVENUE SE
PUYALLUP, WA 98374

PERMIT RESUBMITTAL
03/01/2024

ORIGINAL ISSUE: 3/22/2022

REVISIONS

No.	Description	Date

2220236.20
PROJECT NUMBER

KJK DRAWN BY
ADM CHECKED BY

WESLEY BRADLEY PARK 2
EAST BROWNSTONE

LEVEL 0 FOUNDATION PLAN - NORTH

S1.0-BN

AHBL
TACOMA SEATTLE SPOKANE TRI-CITIES
2215 North 30th Street, Suite 300, Tacoma,WA 98403
253.383.2422 TEL 253.383.2572 FAX www.ahbl.com WEB

3/1/2024 7:20:55 PM

GENERAL PLAN NOTES

1. SEE SHEET S0.1-B AND S0.2-B FOR STRUCTURAL NOTES.
2. SEE SHEET S0.8-B FOR TYPICAL DETAILS.
3. SEE SHEETS S0.3-B AND S0.4-B FOR STRUCTURAL NOTES.
4. SEE SHEETS S0.5-B THRU S0.7-B FOR SCHEDULES.
5. SEE SHEET S0.9-B FOR FRAMING NOTES AND LEGENDS.

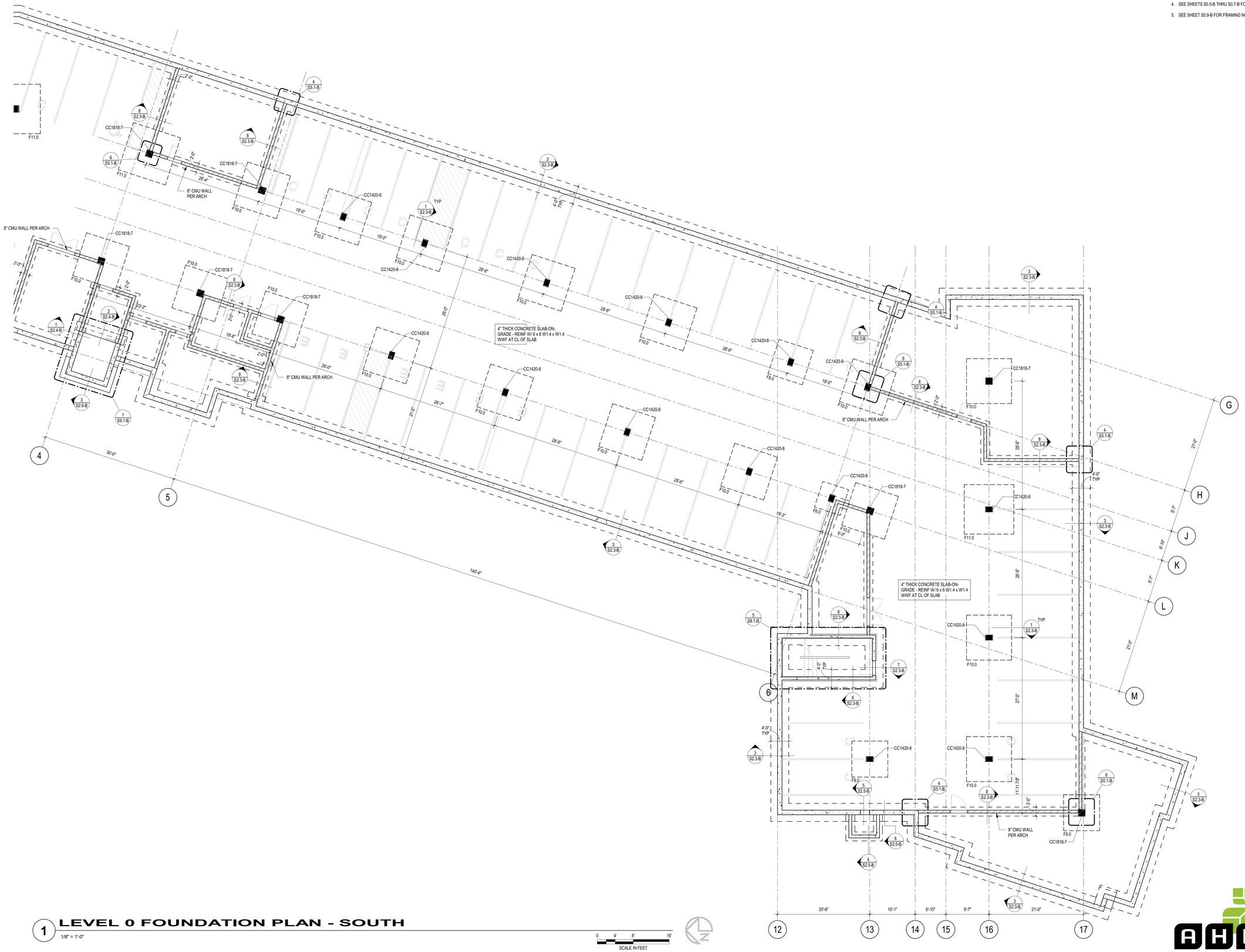

1 LEVEL 0 FOUNDATION PLAN - SOUTH

1/8" = 1'-0"

0 4' 8' 16'
SCALE IN FEET

3/1/2024 7:21:00 PM

in site architects
1000 university ave. w. suite 130
st. paul, minnesota 55104
612-252-4820

NOTICE:
ALTERATION OF THIS DOCUMENT SHALL INVALIDATE THE PROFESSIONAL ENGINEER'S SEAL AND SIGNATURE. THIS DOCUMENT DOES NOT SURRENDER FROM RESERVED OWNERSHIP RIGHTS IN IT. THIS DOCUMENT IS FOR USE ON ONLY FOR THE PROJECT IDENTIFIED IN IT. THIS DOCUMENT IS NOT TO BE USED FOR REPAIR, REMODEL, OR ADDITION TO THIS PROJECT OR FOR ANY OTHER PROJECT.

WESLEY BRADLEY PARK 2
EAST BROWNSTONE

707 39TH AVENUE SE
PUYALLUP, WA 98374

PERMIT RESUBMITTAL
03/01/2024

ORIGINAL ISSUE: 3/22/2022

REVISIONS

No.	Description	Date

2220236.20
PROJECT NUMBER

KJK DRAWN BY
ADM CHECKED BY

WESLEY BRADLEY PARK 2
EAST BROWNSTONE

LEVEL 0 FOUNDATION PLAN - SOUTH

S1.0-BS

AHBL
TACOMA SEATTLE SPOKANE TRI-CITIES
2215 North 30th Street, Suite 300, Tacoma,WA 98403
253.383.2422 TEL 253.383.2572 FAX www.ahbl.com WEB

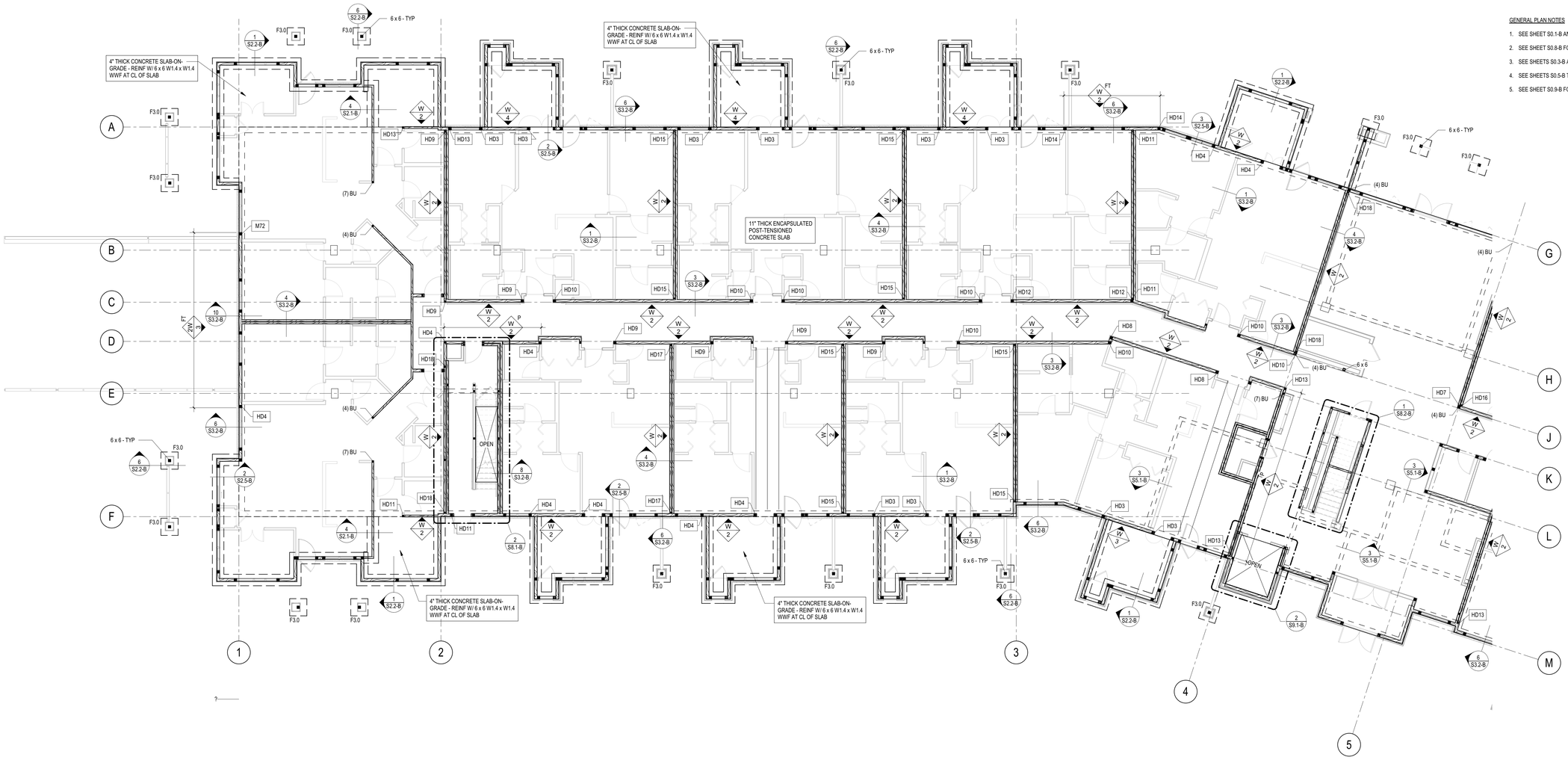

GENERAL PLAN NOTES

1. SEE SHEET S0.1-B AND S0.2-B FOR STRUCTURAL NOTES.
2. SEE SHEET S0.8-B FOR TYPICAL DETAILS.
3. SEE SHEETS S0.3-B AND S0.4-B FOR STRUCTURAL NOTES.
4. SEE SHEETS S0.5-B THRU S0.7-B FOR SCHEDULES.
5. SEE SHEET S0.9-B FOR FRAMING NOTES AND LEGENDS.

1 LEVEL 1 FRAMING PLAN - NORTH

1/8" = 1'-0"

0 4' 8' 16'
SCALE IN FEET

in site architects
1000 university ave. w. # suite 130
st. paul, minnesota 55104
612-252-4820

NOTICE:
ALTERATION OF THIS DOCUMENT SHALL INVALIDATE THE PROFESSIONAL ENGINEER'S SEAL AND SIGNATURE. THIS DOCUMENT DOES NOT SURRENDER FROM RESERVED OWNERSHIP RIGHTS IN IT. THIS DOCUMENT IS FOR USE ONLY FOR THE PROJECT SHOWN BELOW. IT SHOULD NOT BE REUSED OR REPRODUCED FOR REPAIR, REMODEL, OR ADDITION TO THIS PROJECT OR FOR ANY OTHER PROJECT.

WESLEY BRADLEY PARK 2
EAST BROWNSTONE

707 39TH AVENUE SE
PUYALLUP, WA 98374

PERMIT
RESUBMITTAL
03/01/2024

ORIGINAL ISSUE: 05/22/15

REVISIONS

No.	Description	Date

2220236.20
PROJECT NUMBER

KJK DRAWN BY
ADM CHECKED BY

WESLEY BRADLEY PARK 2
EAST BROWNSTONE

LEVEL 1 FRAMING PLAN - NORTH

S1.1-BN

AHBL
TACOMA SEATTLE SPOKANE TRI-CITIES
2215 North 30th Street, Suite 300, Tacoma,WA 98403
253.383.2422 TEL 253.383.2572 FAX www.ahbl.com WEB

3/1/2024 7:21:09 PM

GENERAL PLAN NOTES

1. SEE SHEET S0.1-B AND S0.2-B FOR STRUCTURAL NOTES.
2. SEE SHEET S0.8-B FOR TYPICAL DETAILS.
3. SEE SHEETS S0.3-B AND S0.4-B FOR STRUCTURAL NOTES.
4. SEE SHEETS S0.5-B THRU S0.7-B FOR SCHEDULES.
5. SEE SHEET S0.9-B FOR FRAMING NOTES AND LEGENDS.

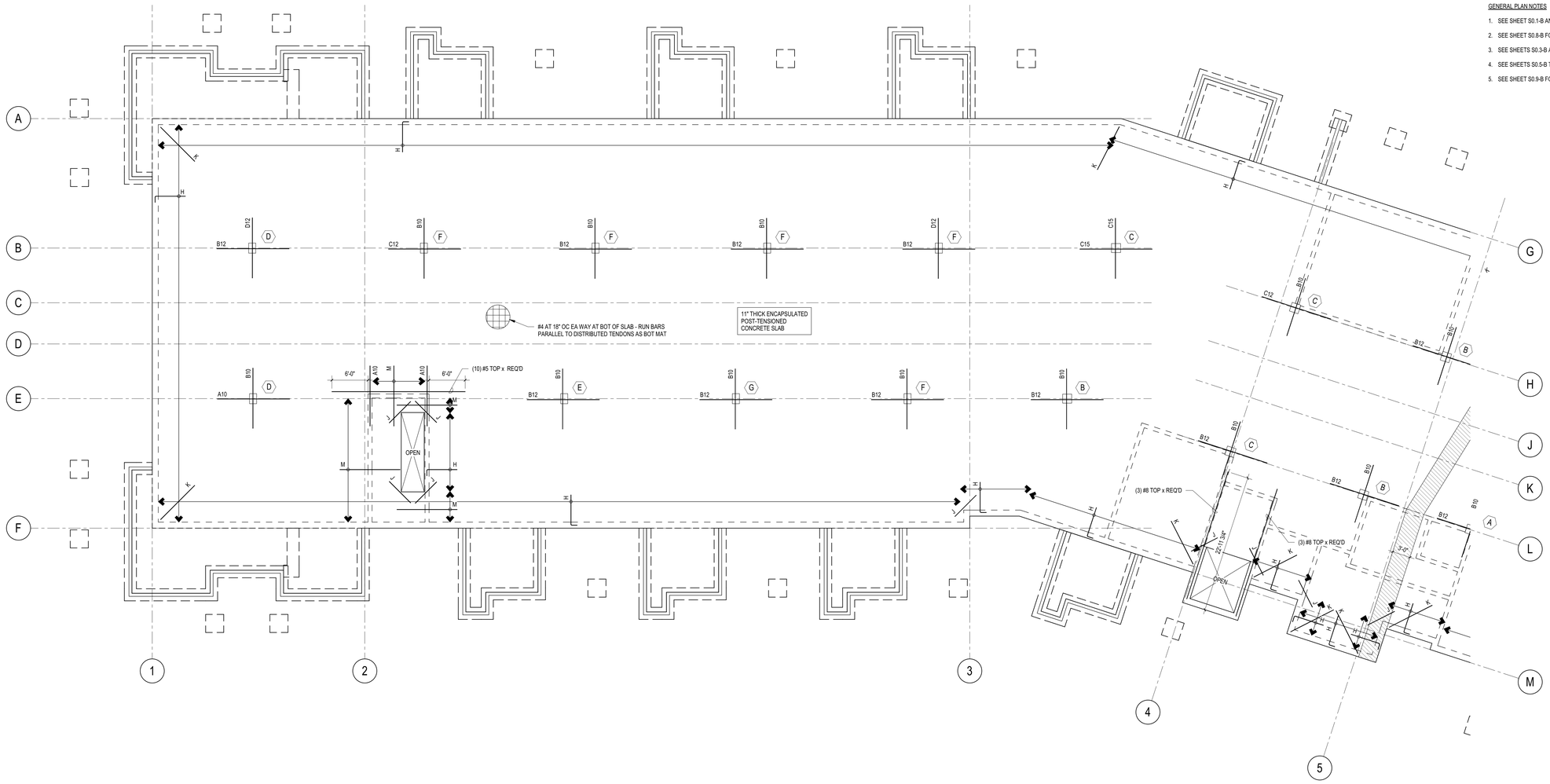

1 LEVEL 1 MILD STEEL PLAN - NORTH

1/8" = 1'-0"

0 4' 8' 16'
SCALE IN FEET

in site architects
1000 university ave. w. # suite 130
st. paul, minnesota 55104
612-252-4820

NOTICE:
ALTERATION OF THIS DOCUMENT SHALL INVALIDATE THE PROFESSIONAL ENGINEER'S SEAL AND SIGNATURE. THIS DOCUMENT DOES NOT DERIVE FROM RESERVED OWNERSHIP RIGHTS N.F.T. THIS DOCUMENT IS FOR USE ONLY FOR THE PROJECT STATED BELOW. IT IS NOT INTENDED TO BE USED FOR REPAIR, REMODEL, OR ADDITION TO THIS PROJECT OR FOR ANY OTHER PROJECT.

WESLEY BRADLEY PARK 2
EAST BROWNSTONE
707 39TH AVENUE SE
PUYALLUP, WA 98374

PERMIT RESUBMITTAL
03/01/2024

ORIGINAL ISSUE: 05/22/15

REVISIONS

No.	Description	Date

2220236.20
PROJECT NUMBER

KJK DRAWN BY
ADM CHECKED BY

WESLEY BRADLEY PARK 2
EAST BROWNSTONE

LEVEL 1 MILD STEEL PLAN - NORTH

AHBL
TACOMA SEATTLE SPOKANE TRI-CITIES
2215 North 30th Street, Suite 300, Tacoma,WA 98403
253.383.2422 TEL 253.383.2572 FAX www.ahbl.com WEB

S1.1-BNM

3/1/2024 7:21:12 PM

GENERAL PLAN NOTES

1. SEE SHEET S0.1-B AND S0.2-B FOR STRUCTURAL NOTES.
2. SEE SHEET S0.8-B FOR TYPICAL DETAILS.
3. SEE SHEETS S0.3-B AND S0.4-B FOR STRUCTURAL NOTES.
4. SEE SHEETS S0.5-B THRU S0.7-B FOR SCHEDULES.
5. SEE SHEET S0.9-B FOR FRAMING NOTES AND LEGENDS.

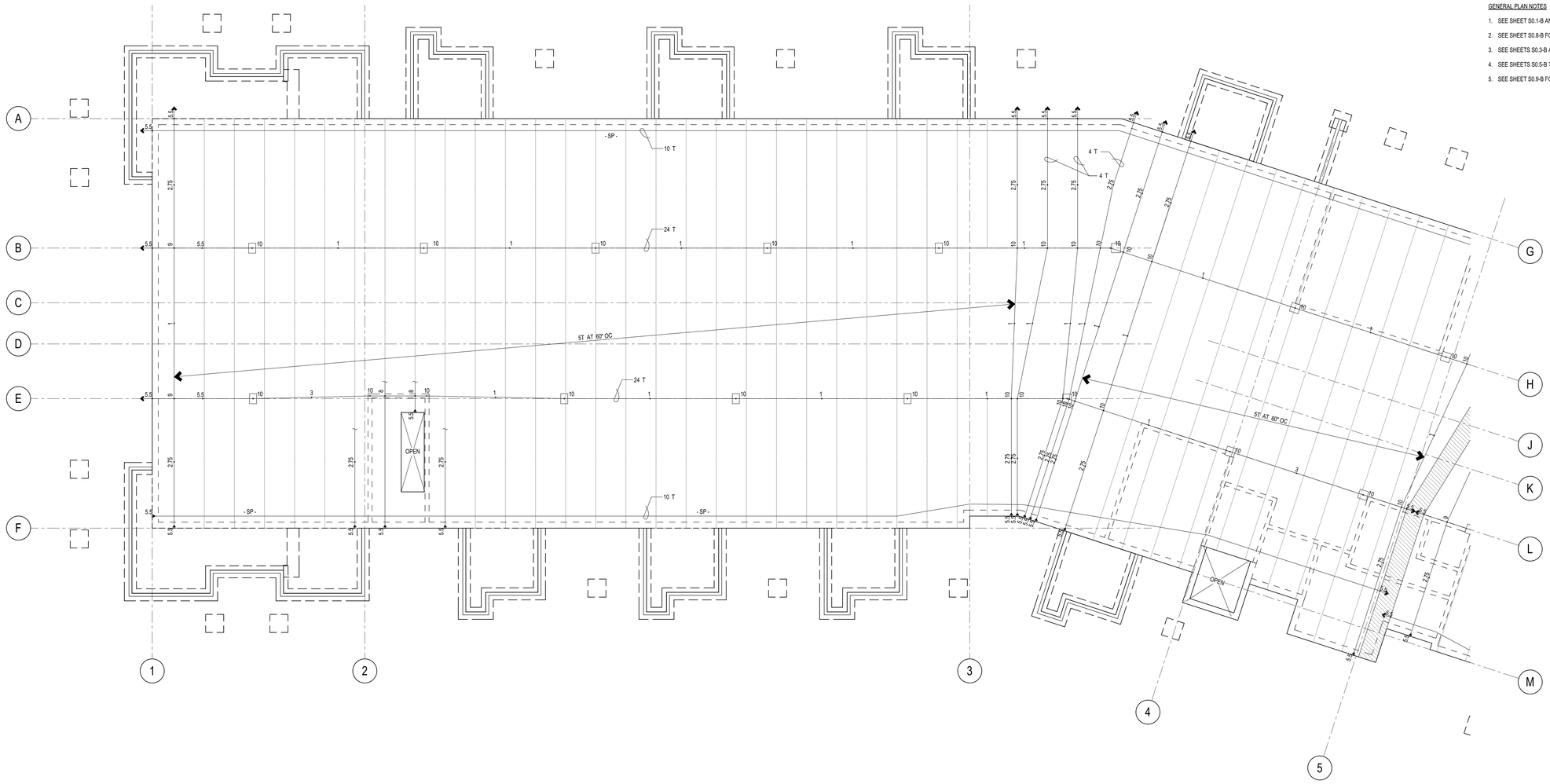

1 LEVEL 1 POST-TENSIONING PLAN - NORTH

1/8" = 1'-0"

0 4' 8' 16'
SCALE IN FEET

in site architects
1000 university ave. w. suite 130
st. paul, minnesota 55104
612-252-4820

NOTICE:
ALTERATION OF THIS DOCUMENT SHALL INVALIDATE THE PROFESSIONAL ENGINEER'S SEAL AND SIGNATURE. THIS DOCUMENT DOES NOT DERIVE FROM RESERVED OWNERSHIP RIGHTS N.F.T. THIS DOCUMENT IS FOR USE ONLY FOR THE PROJECT STATED BELOW. IT IS NOT TO BE USED FOR ANY OTHER PURPOSE, REPAIR, REMODEL, OR ADDITION TO THIS PROJECT OR FOR ANY OTHER PROJECT.

WESLEY BRADLEY PARK 2
EAST BROWNSTONE

707 39TH AVENUE SE
PUYALLUP, WA 98374

PERMIT
RESUBMITTAL
03/01/2024

ORIGINAL ISSUE: 05/22/15

REVISIONS

No.	Description	Date

2220236.20
PROJECT NUMBER

KJK DRAWN BY
ADM CHECKED BY

WESLEY BRADLEY PARK 2
EAST BROWNSTONE

LEVEL 1 POST-TENSIONING PLAN - NORTH

AHBL
TACOMA SEATTLE SPOKANE TRI-CITIES
2215 North 30th Street, Suite 300, Tacoma,WA 98403
253.383.2422 TEL 253.383.2572 FAX www.ahbl.com WEB

S1.1-BNP

3/1/2024 7:21:15 PM

GENERAL PLAN NOTES

1. SEE SHEET S0.1-B AND S0.2-B FOR STRUCTURAL NOTES.
2. SEE SHEET S0.8-B FOR TYPICAL DETAILS.
3. SEE SHEETS S0.3-B AND S0.4-B FOR STRUCTURAL NOTES.
4. SEE SHEETS S0.5-B THRU S0.7-B FOR SCHEDULES.
5. SEE SHEET S0.9-B FOR FRAMING NOTES AND LEGENDS.

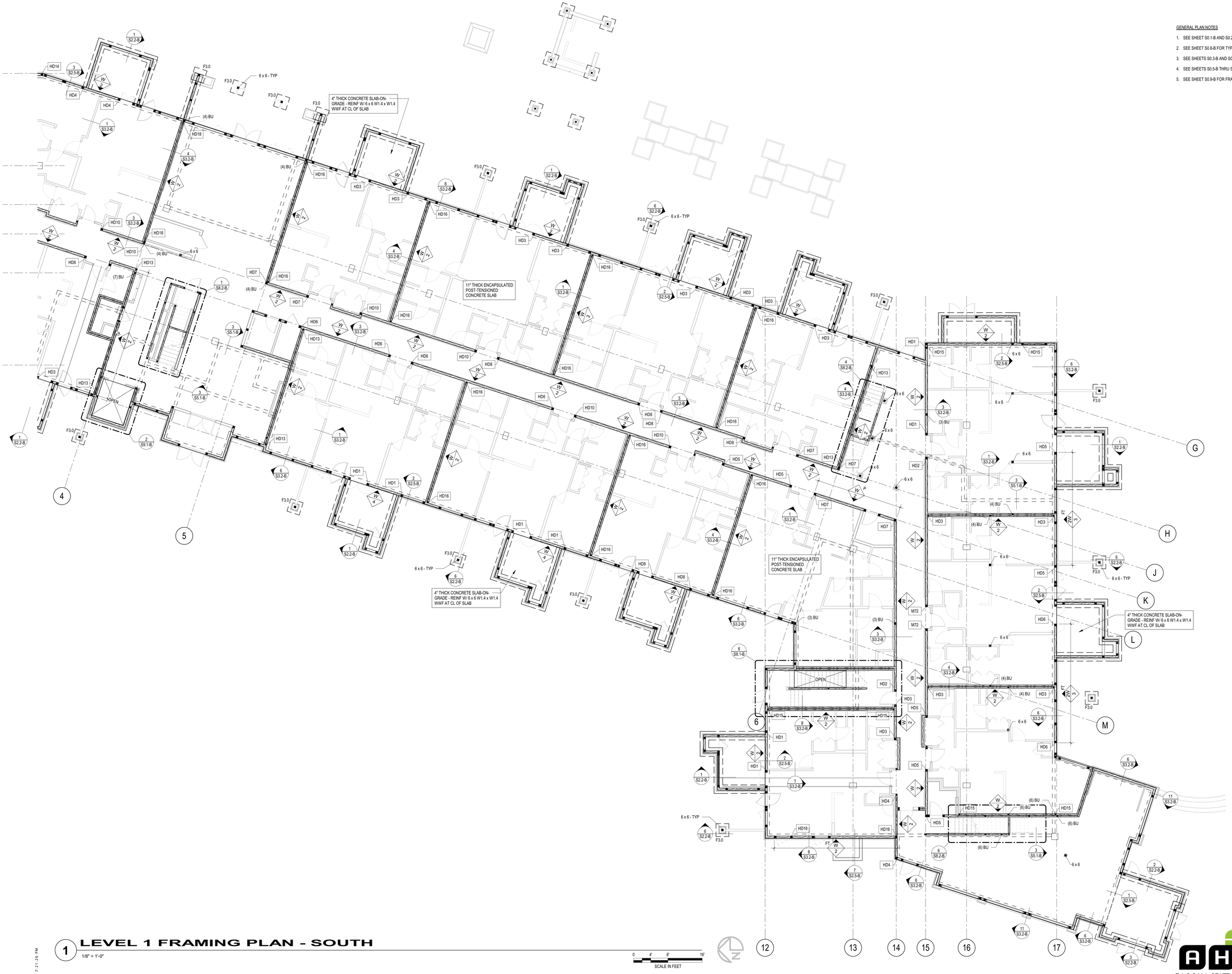

1 LEVEL 1 FRAMING PLAN - SOUTH

1/8" = 1'-0"

0 4' 8' 16'
SCALE IN FEET

in site architects
1000 university ave. w. suite 130
st. paul, minnesota 55104
612-252-4820

NOTICE:
ALTERATION OF THIS DOCUMENT SHALL INVALIDATE THE PROFESSIONAL ENGINEER'S SEAL AND SIGNATURE. THIS DOCUMENT DOES NOT DERIVE FROM RESERVED OWNERSHIP RIGHTS W.T. THIS DOCUMENT IS FOR USE ONLY FOR THE PROJECT IDENTIFIED IN THE TITLE BLOCK. DO NOT USE THIS DOCUMENT FOR REPAIR, REMODEL, OR ADDITION TO THIS PROJECT OR FOR ANY OTHER PROJECT.

WESLEY BRADLEY PARK 2
EAST BROWNSTONE
707 39TH AVENUE SE
PUYALLUP, WA 98374

PERMIT RESUBMITTAL
03/01/2024

ORIGINAL ISSUE: 05/22/15

REVISIONS

No.	Description	Date

2220236.20
PROJECT NUMBER

KJK DRAWN BY
ADM CHECKED BY

WESLEY BRADLEY PARK 2
EAST BROWNSTONE

LEVEL 1 FRAMING PLAN - SOUTH

S1.1-BS

AHBL
TACOMA SEATTLE SPOKANE TRI-CITIES
2215 North 30th Street, Suite 300, Tacoma,WA 98403
253.383.2422 TEL 253.383.2572 FAX www.ahbl.com WEB

3/1/2024 7:21:26 PM

GENERAL PLAN NOTES

1. SEE SHEET S0.1-B AND S0.2-B FOR STRUCTURAL NOTES.
2. SEE SHEET S0.8-B FOR TYPICAL DETAILS.
3. SEE SHEETS S0.3-B AND S0.4-B FOR STRUCTURAL NOTES.
4. SEE SHEETS S0.5-B THRU S0.7-B FOR SCHEDULES.
5. SEE SHEET S0.9-B FOR FRAMING NOTES AND LEGENDS.

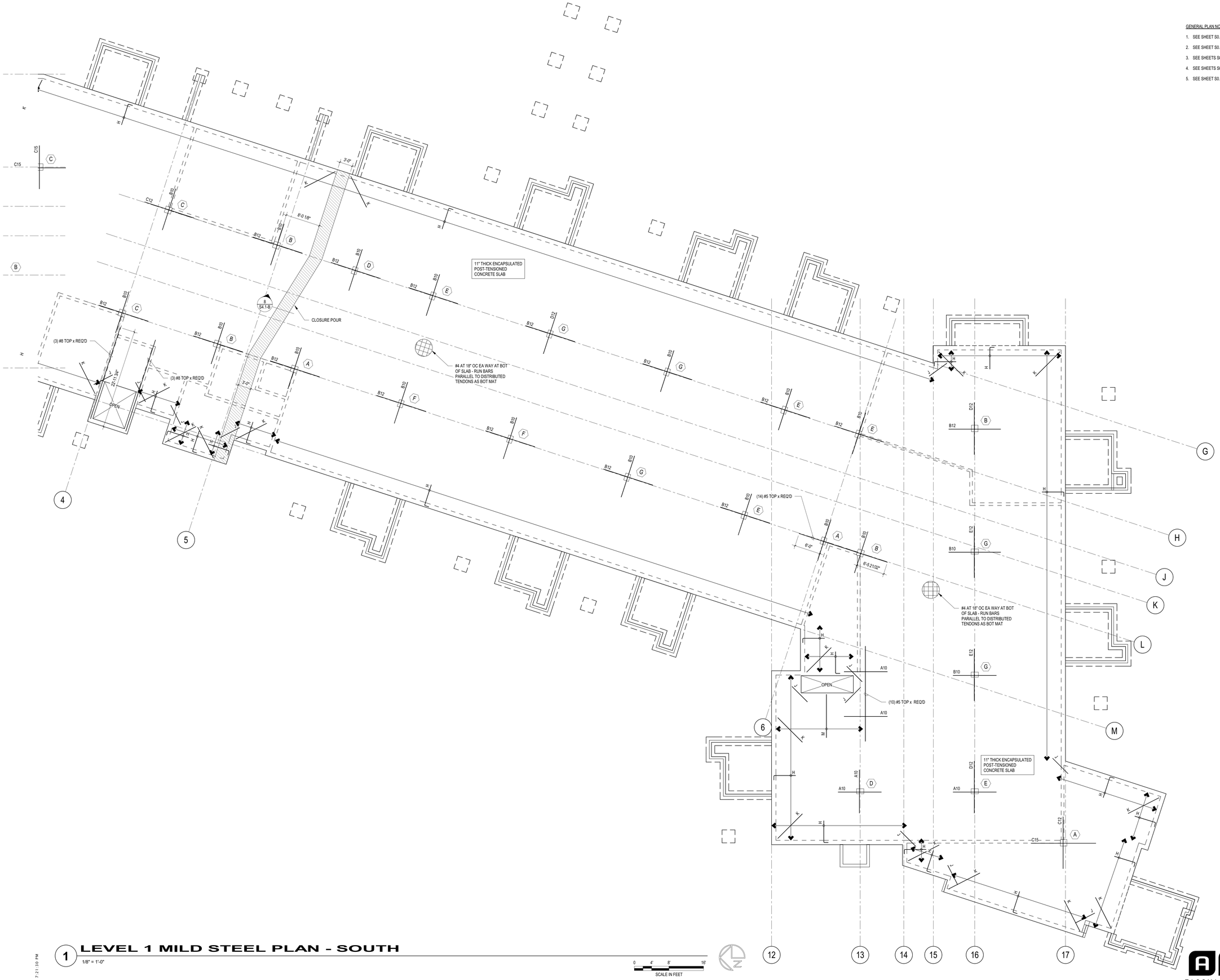

1 LEVEL 1 MILD STEEL PLAN - SOUTH

1/8" = 1'-0"

0 4' 8' 16'
SCALE IN FEET

in site architects
1000 university ave. w. # suite 130
st. paul, minnesota 55104
612-252-4820

NOTICE:
ALTERATION OF THIS DOCUMENT SHALL INVALIDATE THE ARCHITECT'S OPINION AND SEAL. ALTERATION OF THIS DOCUMENT DOES NOT DERIVE FROM RESERVED OWNERSHIP RIGHTS W.T. THIS DOCUMENT IS FOR USE ON ONLY FOR THE PROJECT IDENTIFIED IN THE TITLE BLOCK. IT IS NOT TO BE USED FOR REPAIR, REMODEL, OR ADDITION TO THIS PROJECT OR FOR ANY OTHER PROJECT.

WESLEY BRADLEY PARK 2
EAST BROWNSTONE

707 39TH AVENUE SE
PUYALLUP, WA 98374

PERMIT RESUBMITTAL
03/01/2024

ORIGINAL ISSUE: 05/22/15

REVISIONS

No.	Description	Date

2220236.20
PROJECT NUMBER

KJK DRAWN BY
ADM CHECKED BY

WESLEY BRADLEY PARK 2
EAST BROWNSTONE

LEVEL 1 MILD STEEL PLAN - SOUTH

AHBL
TACOMA SEATTLE SPOKANE TRI-CITIES
2215 North 30th Street, Suite 300, Tacoma,WA 98403
253.383.2422 TEL 253.383.2572 FAX www.ahbl.com WEB

S1.1-BSM

3/1/2024 7:21:30 PM

GENERAL PLAN NOTES

1. SEE SHEET S0.1-B AND S0.2-B FOR STRUCTURAL NOTES.
2. SEE SHEET S0.8-B FOR TYPICAL DETAILS.
3. SEE SHEETS S0.3-B AND S0.4-B FOR STRUCTURAL NOTES.
4. SEE SHEETS S0.5-B THRU S0.7-B FOR SCHEDULES.
5. SEE SHEET S0.9-B FOR FRAMING NOTES AND LEGENDS.

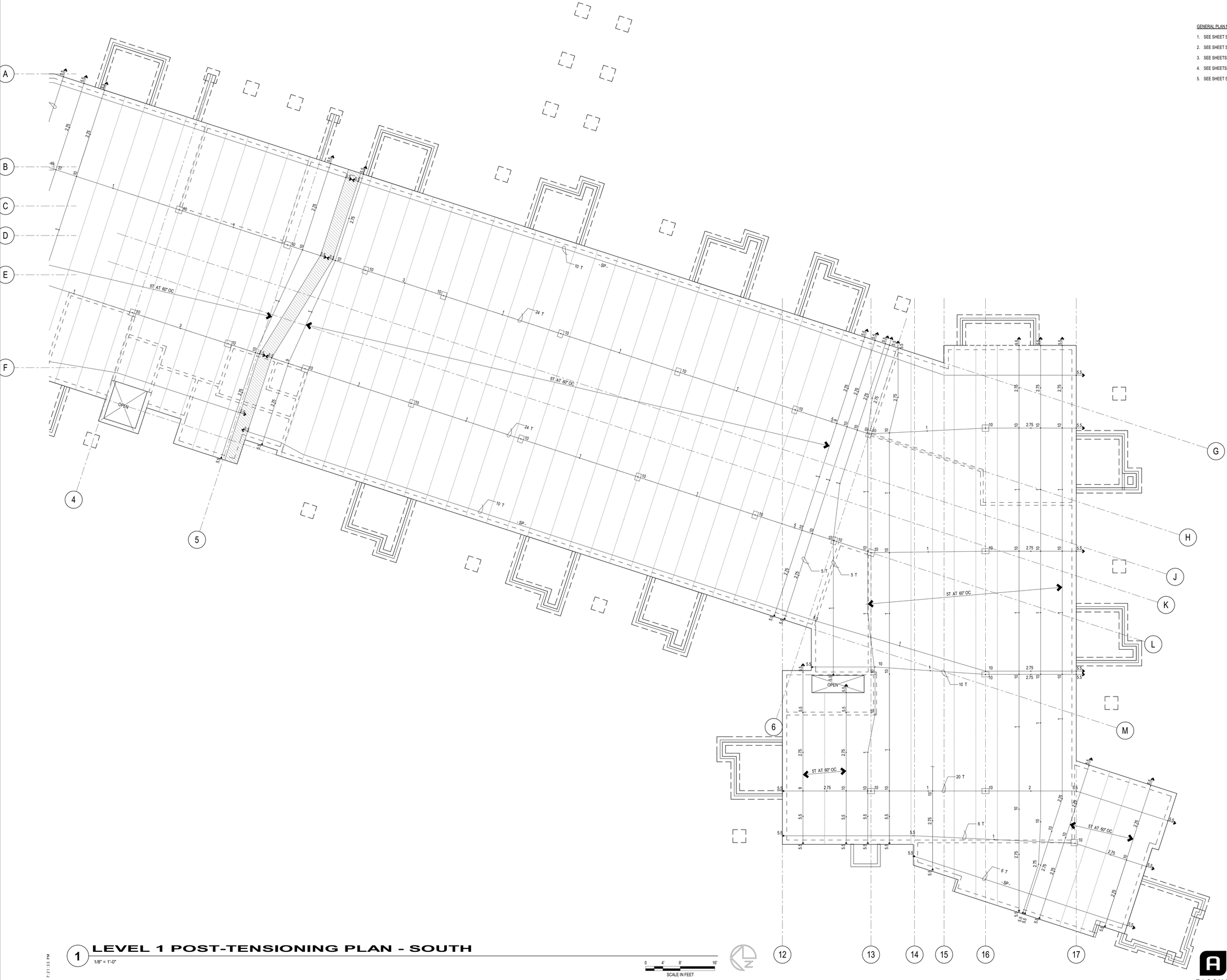

1 LEVEL 1 POST-TENSIONING PLAN - SOUTH

1/8" = 1'-0"

0 4' 8' 16'
SCALE IN FEET

in site architects
1000 university ave. w. suite 130
st. paul, minnesota 55104
612-252-4820

NOTICE:
ALTERATION OF THIS DOCUMENT SHALL INVALIDATE THE PROFESSIONAL ENGINEER'S SEAL AND SIGNATURE. THIS DOCUMENT DOES NOT SURRENDER FROM RESERVED OWNERSHIP RIGHTS IN IT. THIS DOCUMENT IS FOR USE ON ONLY FOR THE PROJECT IDENTIFIED IN IT. THIS DOCUMENT IS NOT TO BE USED FOR REPAIR, REMODEL, OR ADDITION TO THIS PROJECT OR FOR ANY OTHER PROJECT.

WESLEY BRADLEY PARK 2
EAST BROWNSTONE

707 39TH AVENUE SE
PUYALLUP, WA 98374

PERMIT RESUBMITTAL
03/01/2024

ORIGINAL ISSUE: 05/22/15

REVISIONS

No.	Description	Date

2220236.20
PROJECT NUMBER

KJK DRAWN BY
ADM CHECKED BY

WESLEY BRADLEY PARK 2
EAST BROWNSTONE

LEVEL 1 POST-TENSIONING PLAN - SOUTH

AHBL
TACOMA SEATTLE SPOKANE TRI-CITIES
2215 North 30th Street, Suite 300, Tacoma,WA 98403
253.383.2422 TEL 253.383.2572 FAX www.ahbl.com WEB

S1.1-BSP

3/1/2024 7:21:33 PM

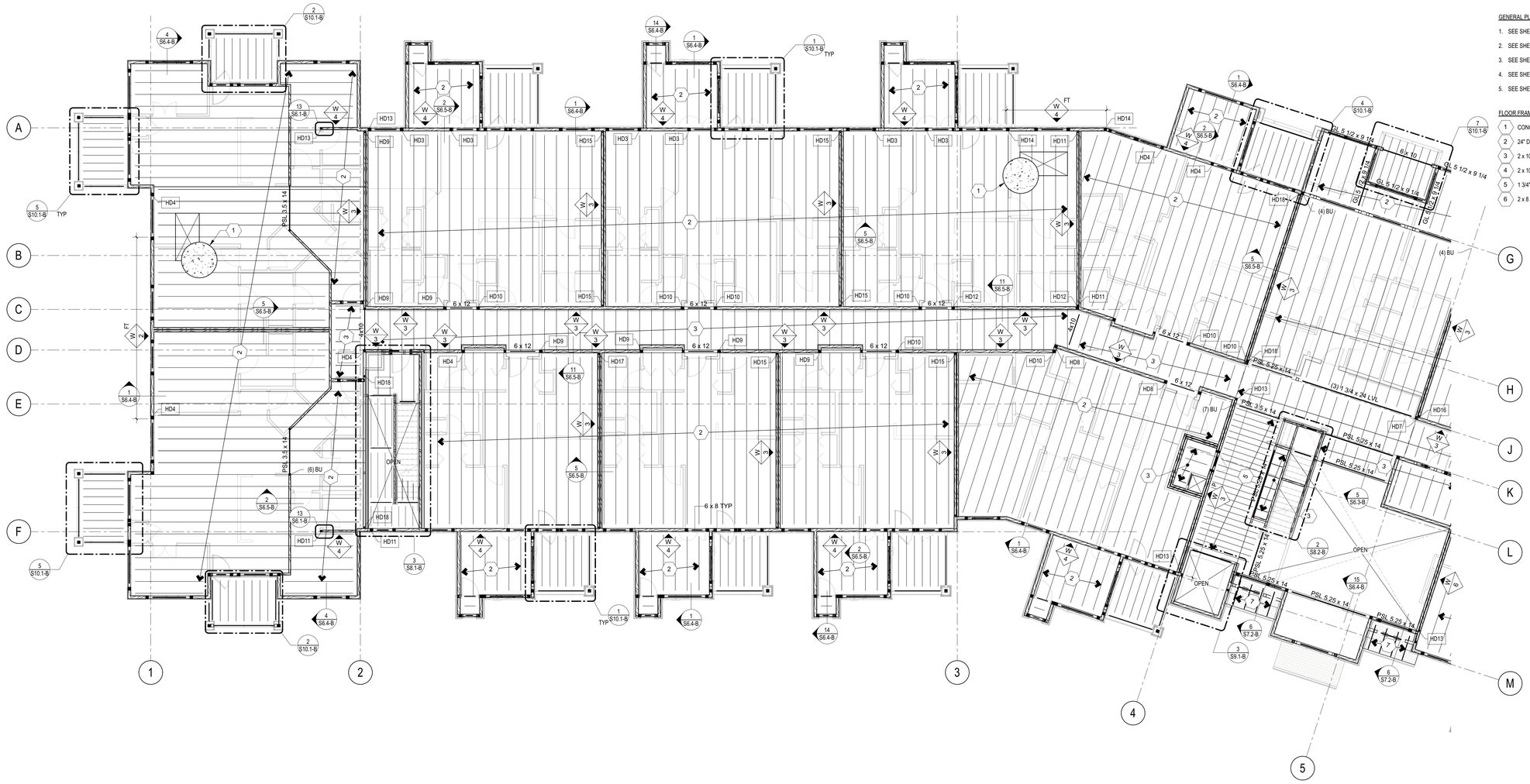

GENERAL PLAN NOTES

1. SEE SHEET S0.1-B AND S0.2-B FOR STRUCTURAL NOTES.
2. SEE SHEET S0.8-B FOR TYPICAL DETAILS.
3. SEE SHEETS S0.3-B AND S0.4-B FOR STRUCTURAL NOTES.
4. SEE SHEETS S0.5-B THRU S0.7-B FOR SCHEDULES.
5. SEE SHEET S0.9-B FOR FRAMING NOTES AND LEGENDS.

FLOOR FRAMING KEYNOTES

1. CONC TOPPING PER ARCH O/ SHTG PER DIAPHRAGM PLAN
2. 24" DEEP PRE-ENGR WOOD FLOOR TRUSSES AT 24" OC MAX
3. 2 x 10 AT 24" OC
4. 2 x 10 AT 16" OC
5. 1 3/4" x 11 7/8" LVL AT 16" OC
6. 2 x 8 AT 24" OC

1 LEVEL 2 FRAMING PLAN - NORTH

1/8" = 1'-0"

0 4' 8' 16'
SCALE IN FEET

AHBL
TACOMA SEATTLE SPOKANE TRI-CITIES
2215 North 30th Street, Suite 300, Tacoma,WA 98403
253.383.2422 TEL 253.383.2572 FAX www.ahbl.com WEB

in site architects
1000 university ave. w. # suite 130
st. paul, minnesota 55104
612-252-4820

NOTICE:
ALTERATION OF THIS DOCUMENT SHALL INVALIDATE THE PROFESSIONAL ENGINEER'S SEAL AND SIGNATURE. THIS DOCUMENT DOES NOT DEROGATE FROM RESERVED OWNERSHIP RIGHTS W.I.T. THIS DOCUMENT IS FOR USE ONLY FOR THE PROJECT SHOWN BELOW. IT SHOULD NOT BE USED FOR ANY OTHER REPAIR, REMODEL, OR ADDITION TO THIS PROJECT OR FOR ANY OTHER PROJECT.

WESLEY BRADLEY PARK 2
EAST BROWNSTONE

707 39TH AVENUE SE
PUYALLUP, WA 98374

PERMIT
RESUBMITTAL
03/01/2024

ORIGINAL ISSUE: 05/22/15

REVISIONS

No.	Description	Date

2220236.20
PROJECT NUMBER

KJK DRAWN BY
ADM CHECKED BY

WESLEY BRADLEY PARK 2
EAST BROWNSTONE

LEVEL 2 FRAMING PLAN - NORTH

S1.2-BN

3/1/2024 7:21:43 PM

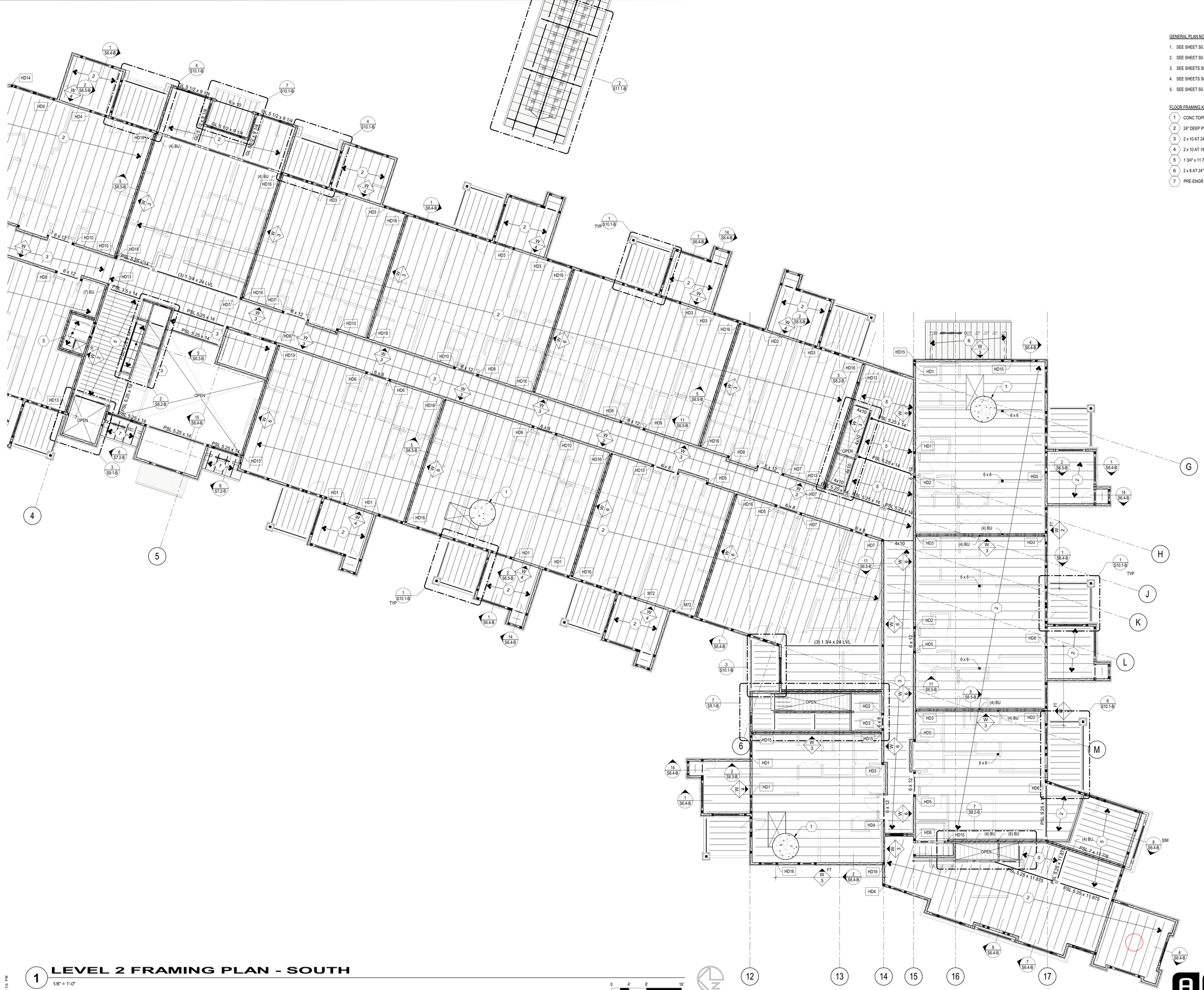

GENERAL PLAN NOTES

1. SEE SHEET S0.1-B AND S0.2-B FOR STRUCTURAL NOTES.
2. SEE SHEET S0.8-B FOR TYPICAL DETAILS.
3. SEE SHEETS S0.3-B AND S0.4-B FOR STRUCTURAL NOTES.
4. SEE SHEETS S0.5-B THRU S0.7-B FOR SCHEDULES.
5. SEE SHEET S0.9-B FOR FRAMING NOTES AND LEGENDS.

FLOOR FRAMING KEYNOTES

1. CONC TOPPING PER ARCH O/ SHTG PER DIAPHRAGM PLAN
2. 24" DEEP PRE-ENGR WOOD FLOOR TRUSSES AT 24" OC MAX
3. 2 x 10 AT 24" OC
4. 2 x 10 AT 16" OC
5. 1 3/4" x 11 7/8" LVL AT 16" OC
6. 2 x 8 AT 24" OC
7. PRE-ENGR WOOD ROOF TRUSSES AT 24" OC

in site architects
1000 university ave. w. suite 130
st. paul, minnesota 55104
612-252-4820

NOTICE:
ALTERATION OF THIS DOCUMENT SHALL INVALIDATE THE PROFESSIONAL ENGINEER'S SEAL AND SIGNATURE. THIS DOCUMENT DOES NOT SURRENDER FROM RESERVED OWNERSHIP RIGHTS IN IT. THIS DOCUMENT IS FOR USE ONLY FOR THE PROJECT IDENTIFIED IN IT. IT SHALL NOT BE USED FOR ANY OTHER PURPOSE, REPAIR, REMODEL, IN ADDITION TO THAT PROJECT OR FOR ANY OTHER PROJECT.

WESLEY BRADLEY PARK 2
EAST BROWNSTONE

707 39TH AVENUE SE
PUYALLUP, WA 98374

PERMIT RESUBMITTAL
03/01/2024

ORIGINAL ISSUE: 05/22/15

REVISIONS

No.	Description	Date

2220236.20
PROJECT NUMBER

KJK — DRAWN BY
ADM — CHECKED BY

WESLEY BRADLEY PARK 2
EAST BROWNSTONE

LEVEL 2 FRAMING PLAN - SOUTH

S1.2-BS

1 LEVEL 2 FRAMING PLAN - SOUTH

1/8" = 1'-0"

0 4' 8' 16'
SCALE IN FEET

AHBL
TACOMA SEATTLE SPOKANE TRI-CITIES
2215 North 30th Street, Suite 300, Tacoma,WA 98403
253.383.2422 TEL 253.383.2572 FAX www.ahbl.com WEB

3/1/2024 7:21:56 PM

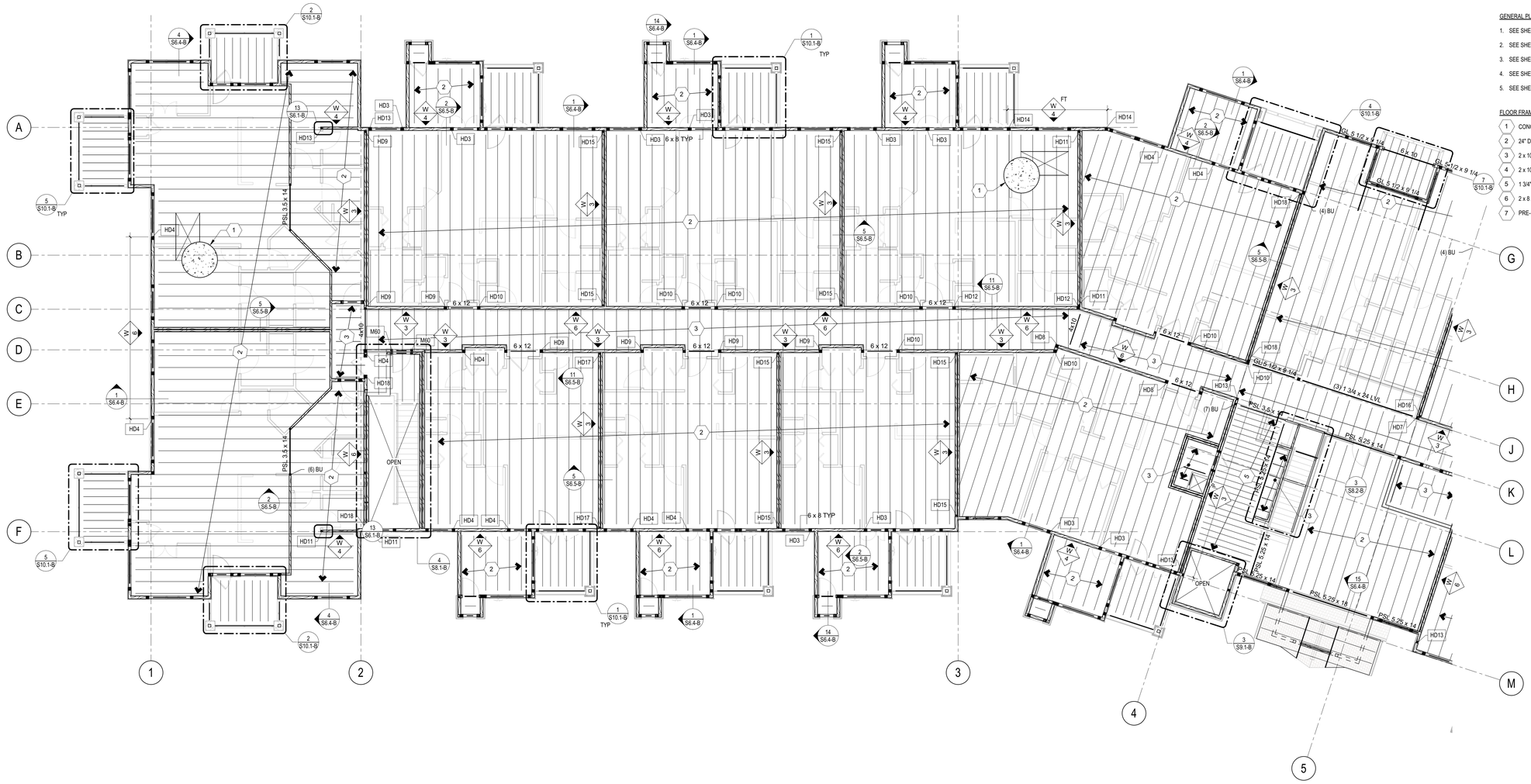

GENERAL PLAN NOTES

1. SEE SHEET S0.1-B AND S0.2-B FOR STRUCTURAL NOTES.
2. SEE SHEET S0.8-B FOR TYPICAL DETAILS.
3. SEE SHEETS S0.3-B AND S0.4-B FOR STRUCTURAL NOTES.
4. SEE SHEETS S0.5-B THRU S0.7-B FOR SCHEDULES.
5. SEE SHEET S0.9-B FOR FRAMING NOTES AND LEGENDS.

FLOOR FRAMING KEYNOTES

1. CONC TOPPING PER ARCH O/ SHTG PER DIAPHRAGM PLAN
2. 24" DEEP PRE-ENGR WOOD FLOOR TRUSSES AT 24" OC MAX
3. 2 x 10 AT 24" OC
4. 2 x 10 AT 16" OC
5. 1 3/4" x 11 7/8" LVL AT 16" OC
6. 2 x 8 AT 24" OC
7. PRE-ENGR WOOD ROOF TRUSSES AT 24" OC

1 LEVEL 3 FRAMING PLAN - NORTH

1/8" = 1'-0"

0 4' 8' 16'
SCALE IN FEET

in site architects
1000 university ave. w. # suite 130
st. paul, minnesota 55104
612-252-4820

NOTICE:
ALTERATION OF THIS DOCUMENT SHALL INVALIDATE THE PROFESSIONAL ENGINEER'S SEAL AND SIGNATURE. THIS DOCUMENT DOES NOT DEROGATE FROM RESERVED OWNERSHIP RIGHTS W.I.T. THIS DOCUMENT IS FOR USE ONLY FOR THE PROJECT SHOWN BELOW. IT IS NOT TO BE USED FOR ANY OTHER PURPOSE, REPAIR, REMODEL, OR ADDITION TO THIS PROJECT OR FOR ANY OTHER PROJECT.

WESLEY BRADLEY PARK 2
EAST BROWNSTONE

707 39TH AVENUE SE
PUYALLUP, WA 98374

PERMIT
RESUBMITTAL
03/01/2024

ORIGINAL ISSUE: 05/22/15

REVISIONS

No.	Description	Date

2220236.20
PROJECT NUMBER

KJK DRAWN BY
ADM CHECKED BY

WESLEY BRADLEY PARK 2
EAST BROWNSTONE

LEVEL 3 FRAMING PLAN - NORTH

S1.3-BN

AHBL
TACOMA SEATTLE SPOKANE TRI-CITIES
2215 North 30th Street, Suite 300, Tacoma,WA 98403
253.383.2422 TEL 253.383.2572 FAX www.ahbl.com WEB

3/1/2024 7:22:55 PM

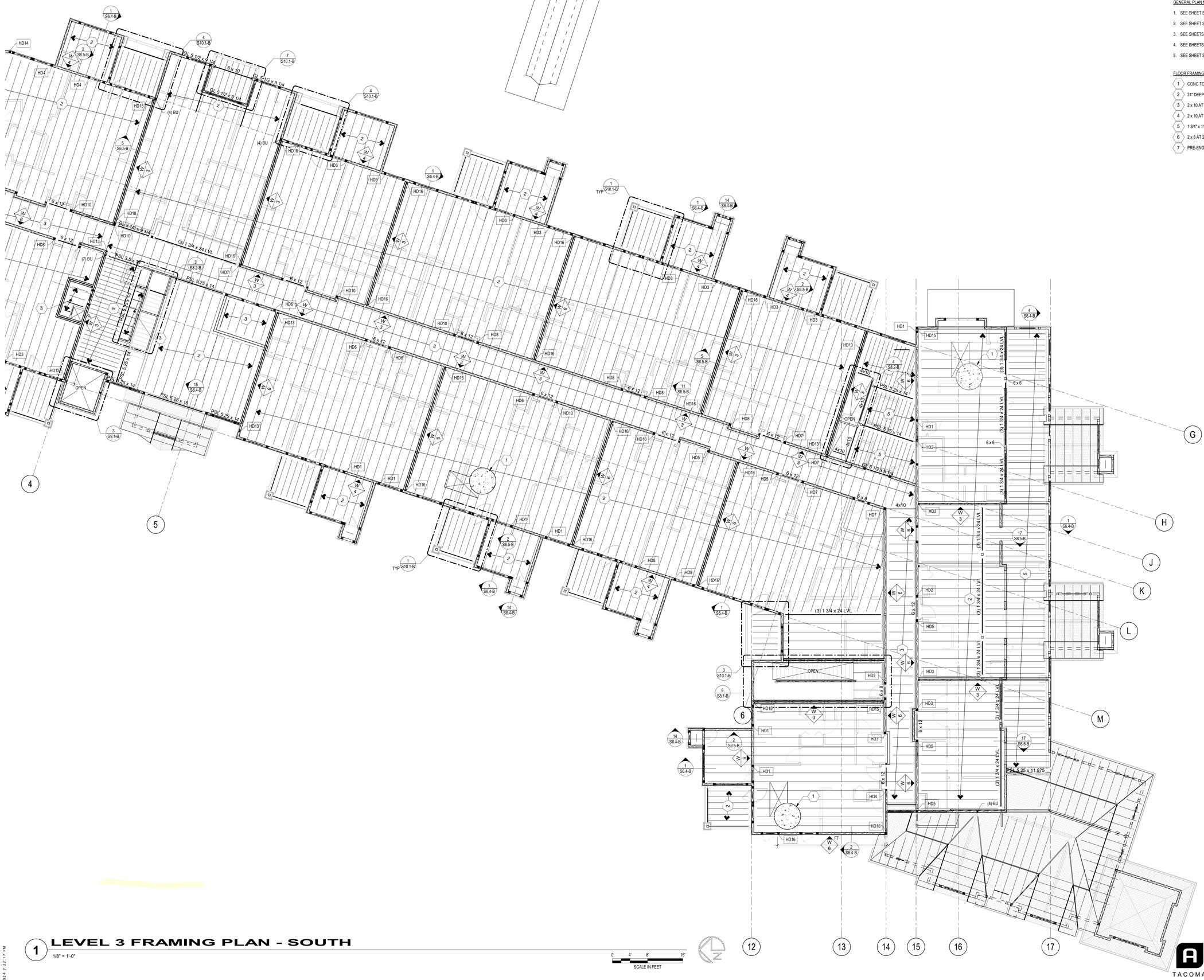

1 LEVEL 3 FRAMING PLAN - SOUTH

1/8" = 1'-0"

0 4' 8' 16'
SCALE IN FEET

GENERAL PLAN NOTES

1. SEE SHEET S0.1-B AND S0.2-B FOR STRUCTURAL NOTES.
2. SEE SHEET S0.8-B FOR TYPICAL DETAILS.
3. SEE SHEETS S0.3-B AND S0.4-B FOR STRUCTURAL NOTES.
4. SEE SHEETS S0.5-B THRU S0.7-B FOR SCHEDULES.
5. SEE SHEET S0.9-B FOR FRAMING NOTES AND LEGENDS.

FLOOR FRAMING KEYNOTES

1. CONC TOPPING PER ARCH O/ SHTG PER DIAPHRAGM PLAN
2. 24" DEEP PRE-ENGR WOOD FLOOR TRUSSES AT 24" OC MAX
3. 2 x 10 AT 24" OC
4. 2 x 10 AT 16" OC
5. 1 3/4" x 11 7/8" LVL AT 16" OC
6. 2 x 8 AT 24" OC
7. PRE-ENGR WOOD ROOF TRUSSES AT 24" OC

in site architects
1000 university ave. w. suite 130
st. paul, minnesota 55104
612-252-4820

NOTICE:
ALTERATION OF THIS DOCUMENT SHALL INVALIDATE THE PROFESSIONAL ENGINEER'S SEAL AND SIGNATURE. THIS DOCUMENT DOES NOT SERVE AS A TRANSFER OF OWNERSHIP RIGHTS IN IT. THIS DOCUMENT IS FOR USE ONLY FOR THE PROJECT DESCRIBED IN IT. IT SHOULD NOT BE USED FOR ANY OTHER PROJECT, REMODEL, OR ADDITION TO THIS PROJECT OR FOR ANY OTHER PROJECT.

WESLEY BRADLEY PARK 2
EAST BROWNSTONE

707 39TH AVENUE SE
PUYALLUP, WA 98374

PERMIT RESUBMITTAL
03/01/2024

ORIGINAL ISSUE: 05/22/15

REVISIONS

No.	Description	Date

2220236.20
PROJECT NUMBER

KJK DRAWN BY
ADM CHECKED BY

WESLEY BRADLEY PARK 2
EAST BROWNSTONE

LEVEL 3 FRAMING PLAN - SOUTH

S1.3-BS

AHBL
TACOMA SEATTLE SPOKANE TRI-CITIES
2215 North 30th Street, Suite 300, Tacoma,WA 98403
253.383.2422 TEL 253.383.2572 FAX www.ahbl.com WEB

3/1/2024 7:22:17 PM

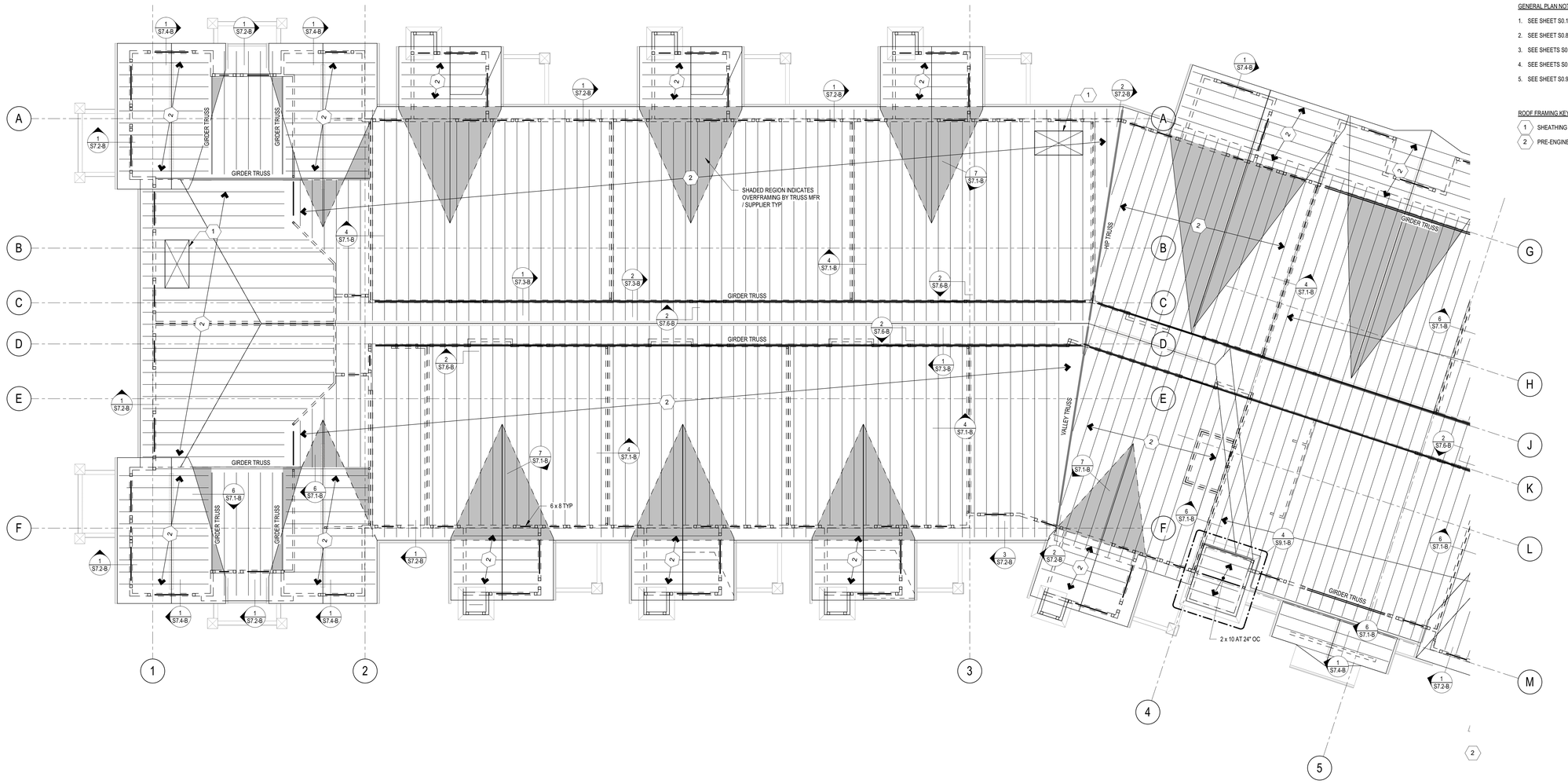

1 ROOF FRAMING PLAN - NORTH

1/8" = 1'-0"

SCALE IN FEET

GENERAL PLAN NOTES

1. SEE SHEET S0.1-B AND S0.2-B FOR STRUCTURAL NOTES.
2. SEE SHEET S0.8-B FOR TYPICAL DETAILS.
3. SEE SHEETS S0.3-B AND S0.4-B FOR STRUCTURAL NOTES.
4. SEE SHEETS S0.5-B THRU S0.7-B FOR SCHEDULES.
5. SEE SHEET S0.9-B FOR FRAMING NOTES AND LEGENDS.

ROOF FRAMING KEYNOTES

1. SHEATHING PER DIAPHRAGM PLAN
2. PRE-ENGINEERED WOOD ROOF TRUSSES AT 24" OC

in site architects
1000 university ave. w. # suite 130
st. paul, minnesota 55104
612-252-4820

NOTICE:
ALTERATION OF THIS DOCUMENT SHALL INVALIDATE THE PROFESSIONAL ENGINEER'S SEAL AND SIGNATURE. THIS DOCUMENT DOES NOT SURRENDER FROM RESERVED OWNERSHIP RIGHTS IN IT. THIS DOCUMENT IS FOR USE ON ONLY FOR THE PROJECT DESCRIBED IN IT. IT SHOULD NOT BE REUSED OR REPRODUCED FOR REPAIR, REMODEL, OR ADDITION TO THIS PROJECT OR FOR ANY OTHER PROJECT.

WESLEY BRADLEY PARK 2
EAST BROWNSTONE

707 39TH AVENUE SE
PUYALLUP, WA 98374

PERMIT RESUBMITTAL
03/01/2024

ORIGINAL ISSUE: 08/17/16

REVISIONS

No.	Description	Date

2220236.20
PROJECT NUMBER

KJK DRAWN BY
ADM CHECKED BY

WESLEY BRADLEY PARK 2
EAST BROWNSTONE

ROOF FRAMING PLAN - NORTH

S1.4-BN

AHBL
TACOMA SEATTLE SPOKANE TRI-CITIES
2215 North 30th Street, Suite 300, Tacoma,WA 98403
253.383.2422 TEL 253.383.2572 FAX www.ahbl.com WEB

3/1/2024 7:22:24 PM

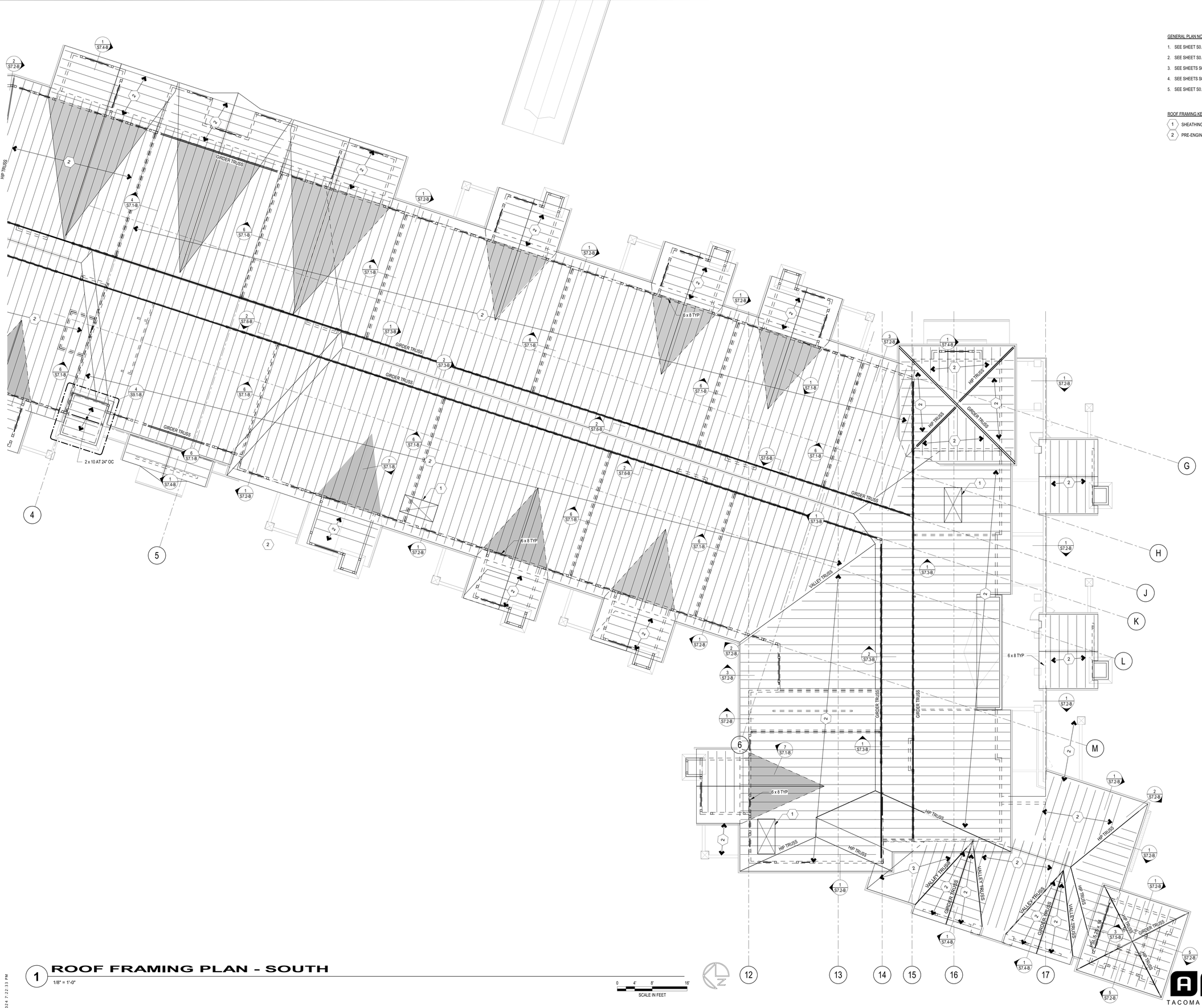

1 ROOF FRAMING PLAN - SOUTH

1/8" = 1'-0"

0 4' 8' 16'
SCALE IN FEET

GENERAL PLAN NOTES

1. SEE SHEET S0.1-B AND S0.2-B FOR STRUCTURAL NOTES.
2. SEE SHEET S0.8-B FOR TYPICAL DETAILS.
3. SEE SHEETS S0.3-B AND S0.4-B FOR STRUCTURAL NOTES.
4. SEE SHEETS S0.5-B THRU S0.7-B FOR SCHEDULES.
5. SEE SHEET S0.9-B FOR FRAMING NOTES AND LEGENDS.

ROOF FRAMING KEYNOTES

1. SHEATHING PER DIAPHRAGM PLAN
2. PRE-ENGINEERED WOOD ROOF TRUSSES AT 24" OC

in site architects
1000 university ave. w. # suite 130
st. paul, minnesota 55104
612-252-4820

NOTICE:
ALTERATION OF THIS DOCUMENT SHALL INVALIDATE THE ARCHITECT'S SEAL AND SIGNATURE. THE USE OF THIS DOCUMENT DOES NOT DERIVE FROM RESERVED OWNERSHIP RIGHTS IN IT. THIS DOCUMENT IS FOR USE ONLY FOR THE PROJECT IDENTIFIED IN IT. THE DOCUMENT MAY NOT BE USED FOR REPAIR, REMODEL, OR ADDITION TO THIS PROJECT OR FOR ANY OTHER PROJECT.

WESLEY BRADLEY PARK 2
EAST BROWNSTONE

707 39TH AVENUE SE
PUYALLUP, WA 98374

PERMIT RESUBMITTAL
03/01/2024

ORIGINAL ISSUE: 08/17/16

REVISIONS

No.	Description	Date

2220236.20
PROJECT NUMBER

KJK DRAWN BY
ADM CHECKED BY

WESLEY BRADLEY PARK 2
EAST BROWNSTONE

ROOF FRAMING PLAN - SOUTH

S1.4-BS

AHBL
TACOMA SEATTLE SPOKANE TRI-CITIES
2215 North 30th Street, Suite 300, Tacoma,WA 98403
253.383.2422 TEL 253.383.2572 FAX www.ahbl.com WEB

3/11/2024 7:22:33 PM

DIAPHRAGM SCHEDULE

MARK	SHEATHING	NAILING		
		DIAPHRAGM BOUNDARIES	ALL JOINTS AND PANEL EDGES	FIELD
FA	23/32" APA RATED SHEATHING	10d AT 6" OC	10d AT 6" OC	10d AT 12" OC
RA	19/32" APA RATED SHEATHING	10d AT 6" OC	10d AT 6" OC	10d AT 12" OC

DIAPHRAGM NOTES:

1. ALL NAILS SHALL BE COMMON, MINIMUM 0.148" DIAMETER AND SHALL PENETRATE INTO FRAMING MEMBERS MINIMUM 1 1/2" UNO NAILS SHALL BE LOCATED AT LEAST 3/8" FROM THE EDGES OF PANELS.
2. ALL SHEATHING PANELS SHALL BE NOT LESS THAN 4'-0" x 8'-0" UNLESS OTHERWISE APPROVED BY THE ENGINEER AT BOUNDARIES AND CHANGES IN FRAMING IRECTION, PANELS MAY BE ANY SIZE PROVIDED ALL EDGES OF THE UNDERSIZED PANELS ARE SUPPORTED BY AND FASTENED TO FRAMING MEMBERS OR BLOCKING ITH 3x NOMINAL WIDTH.
3. ALL FLOOR SHEATHING SHALL BE GLUED AND NAILED TO SUPPORTS.
4. ALL SHEATHING SHALL BE UNBLOCKED T&G FOR SHTG THICKNESS 19/32" OR GREATER AT CONTRACTOR'S OPTION T&G EDGES MAY BE OMITTED AT ROOF SHTG IF PW LIPS ARE INSTALLED.

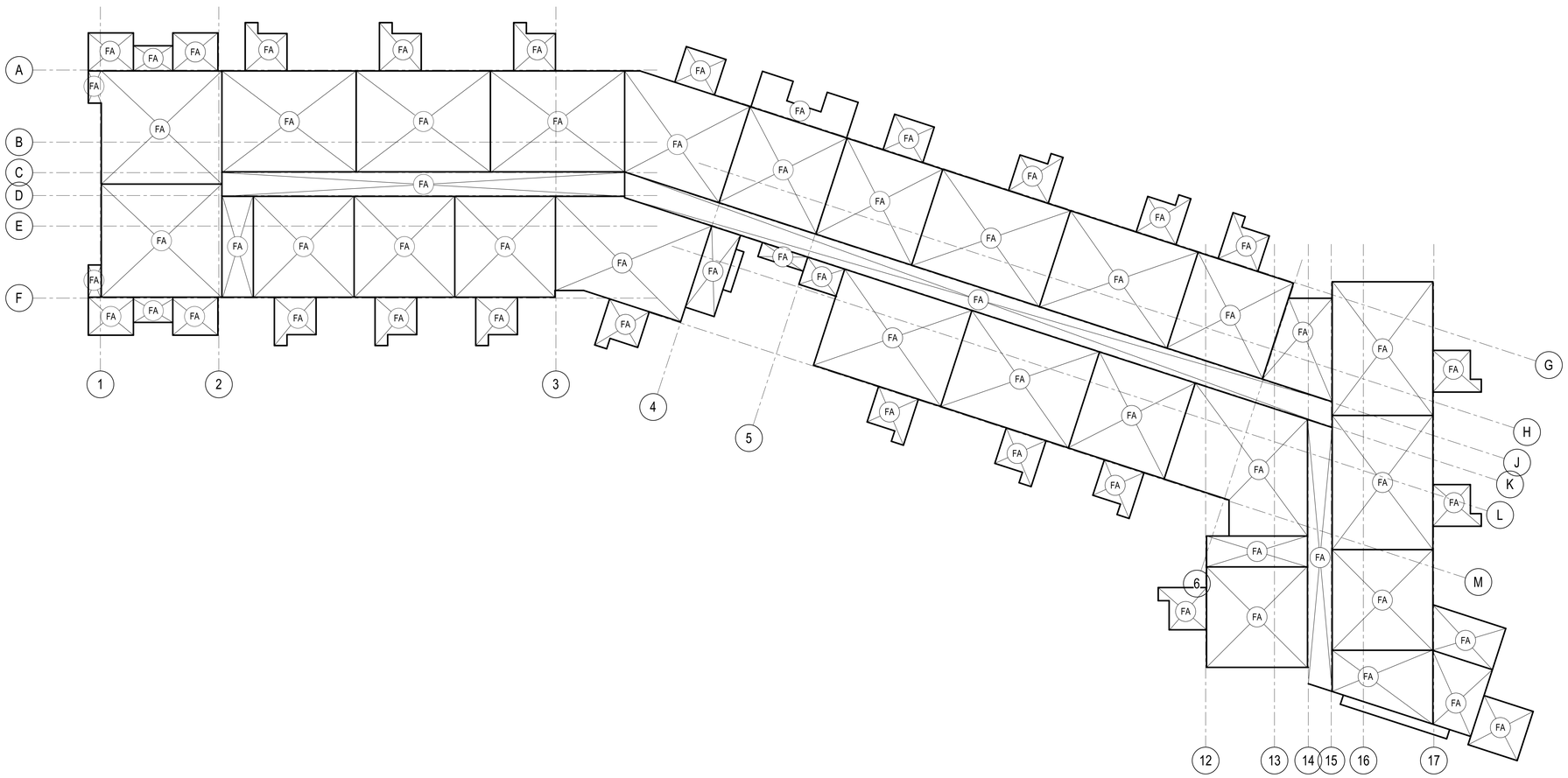

1 **LEVEL 2 DIAPHRAGM PLAN**

1/16" = 1'-0"

0 8' 16' 32'
SCALE IN FEET

in site architects
1000 university ave. w. # suite 130
st. paul, minnesota 55104
612-252-4820

NOTICE:
ALTERATION OF THIS DOCUMENT SHALL INVALIDATE THE PROFESSIONAL ENGINEER'S SEAL AND SIGNATURE. THIS DOCUMENT DOES NOT SURRUGATE FROM RESERVED OWNERSHIP RIGHTS IN IT. THIS DOCUMENT IS FOR USE ONLY FOR THE PROJECT DESCRIBED IN IT. THE DOCUMENT MAY NOT BE USED FOR REPAIR, REMODEL, OR ADDITION TO THIS PROJECT OR FOR ANY OTHER PROJECT.

WESLEY BRADLEY PARK 2
EAST BROWNSTONE
707 39TH AVENUE SE
PUYALLUP, WA 98374

PERMIT
RESUBMITTAL
03/01/2024

ORIGINAL ISSUE: 05/22/15

REVISIONS

No.	Description	Date

2220236.20
PROJECT NUMBER

KJK DRAWN BY
ADM CHECKED BY

WESLEY BRADLEY PARK 2
EAST BROWNSTONE

LEVEL 2 DIAPHRAGM PLAN

S1.5-B

AHBL
TACOMA SEATTLE SPOKANE TRI-CITIES
2215 North 30th Street, Suite 300, Tacoma,WA 98403
253.383.2422 TEL 253.383.2572 FAX www.ahbl.com WEB

3/1/2024 7:22:36 PM

DIAPHRAGM SCHEDULE

MARK	SHEATHING	NAILING		
		DIAPHRAGM BOUNDARIES	ALL JOINTS AND PANEL EDGES	FIELD
FA	23/32" APA RATED SHEATHING	10d AT 6" OC	10d AT 6" OC	10d AT 12" OC
RA	19/32" APA RATED SHEATHING	10d AT 6" OC	10d AT 6" OC	10d AT 12" OC

DIAPHRAGM NOTES:

1. ALL NAILS SHALL BE COMMON, MINIMUM 0.148" DIAMETER AND SHALL PENETRATE INTO FRAMING MEMBERS MINIMUM 1 1/2" UNO NAILS SHALL BE LOCATED AT LEAST 3/8" FROM THE EDGES OF PANELS.
2. ALL SHEATHING PANELS SHALL BE NOT LESS THAN 4'-0" x 8'-0" UNLESS OTHERWISE APPROVED BY THE ENGINEER AT BOUNDARIES AND CHANGES IN FRAMING IRECTION, PANELS MAY BE ANY SIZE PROVIDED ALL EDGES OF THE UNDERSIZED PANELS ARE SUPPORTED BY AND FASTENED TO FRAMING MEMBERS OR BLOCKING ITH 3x NOMINAL WIDTH.
3. ALL FLOOR SHEATHING SHALL BE GLUED AND NAILED TO SUPPORTS.
4. ALL SHEATHING SHALL BE UNBLOCKED T&G FOR SHTG THICKNESS 19/32" OR GREATER AT CONTRACTOR'S OPTION T&G EDGES MAY BE OMITTED AT ROOF SHTG IF PW LIPS ARE INSTALLED.

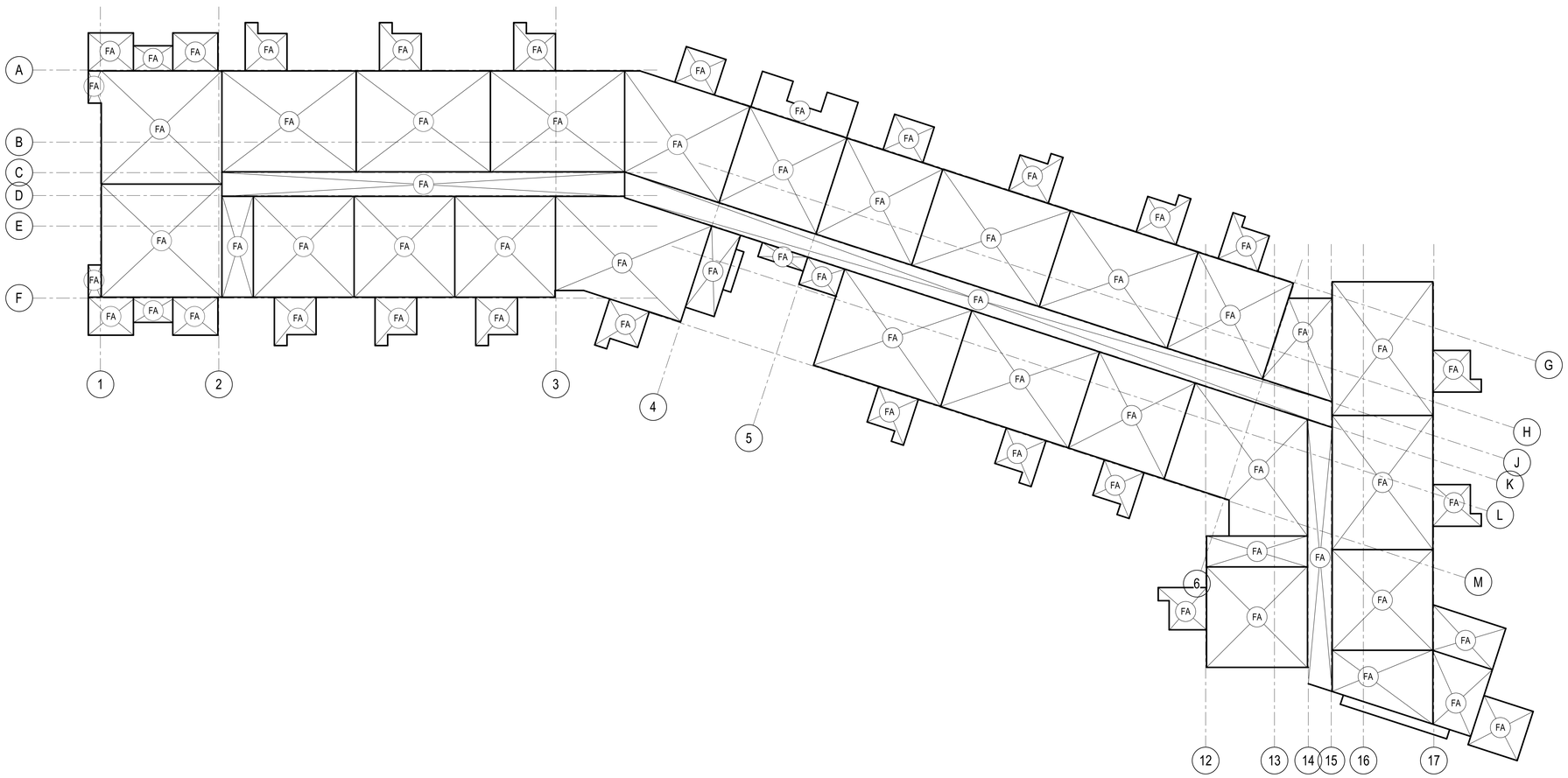

1 **LEVEL 3 DIAPHRAGM PLAN**

1/16" = 1'-0"

0 8' 16' 32'
SCALE IN FEET

in site architects
1000 university ave. w. # suite 130
st. paul, minnesota 55104
612-252-4820

NOTICE:
ALTERATION OF THIS DOCUMENT SHALL INVALIDATE THE PROFESSIONAL ENGINEER'S SEAL AND SIGNATURE. THIS DOCUMENT DOES NOT SURRENDER FROM RESERVED OWNERSHIP RIGHTS IN IT. THIS DOCUMENT IS FOR USE ONLY FOR THE PROJECT DESCRIBED IN IT. IT SHOULD NOT BE USED FOR OTHER PURPOSES, REPAIR, REMODEL, OR ADDITION TO THIS PROJECT OR FOR ANY OTHER PROJECT.

WESLEY BRADLEY PARK 2
EAST BROWNSTONE
707 39TH AVENUE SE
PUYALLUP, WA 98374

PERMIT
RESUBMITTAL
03/01/2024

ORIGINAL ISSUE: 05/22/15

REVISIONS

No.	Description	Date

2220236.20
PROJECT NUMBER

KJK DRAWN BY
ADM CHECKED BY

WESLEY BRADLEY PARK 2
EAST BROWNSTONE

LEVEL 3 DIAPHRAGM PLAN

S1.6-B

AHBL
TACOMA SEATTLE SPOKANE TRI-CITIES
2215 North 30th Street, Suite 300, Tacoma,WA 98403
253.383.2422 TEL 253.383.2572 FAX www.ahbl.com WEB

3/1/2024 7:22:48 PM

DIAPHRAGM SCHEDULE

MARK	SHEATHING	NAILING		
		DIAPHRAGM BOUNDARIES	ALL JOINTS AND PANEL EDGES	FIELD
FA	23/32" APA RATED SHEATHING	10d AT 6" OC	10d AT 6" OC	10d AT 12" OC
FA	19/32" APA RATED SHEATHING	10d AT 6" OC	10d AT 6" OC	10d AT 12" OC

DIAPHRAGM NOTES:

1. ALL NAILS SHALL BE COMMON, MINIMUM 0.148" DIAMETER AND SHALL PENETRATE INTO FRAMING MEMBERS MINIMUM 1 1/2" UNO NAILS SHALL BE LOCATED AT LEAST 3/8" FROM THE EDGES OF PANELS.
2. ALL SHEATHING PANELS SHALL BE NOT LESS THAN 4'-0" x 8'-0" UNLESS OTHERWISE APPROVED BY THE ENGINEER AT BOUNDARIES AND CHANGES IN FRAMING IRECTION, PANELS MAY BE ANY SIZE PROVIDED ALL EDGES OF THE UNDERSIZED PANELS ARE SUPPORTED BY AND FASTENED TO FRAMING MEMBERS OR BLOCKING ITH 3x NOMINAL WIDTH.
3. ALL FLOOR SHEATHING SHALL BE GLUED AND NAILED TO SUPPORTS.
4. ALL SHEATHING SHALL BE UNBLOCKED T&G FOR SHTG THICKNESS 19/32" OR GREATER AT CONTRACTOR'S OPTION T&G EDGES MAY BE OMITTED AT ROOF SHTG IF PW LIPS ARE INSTALLED.

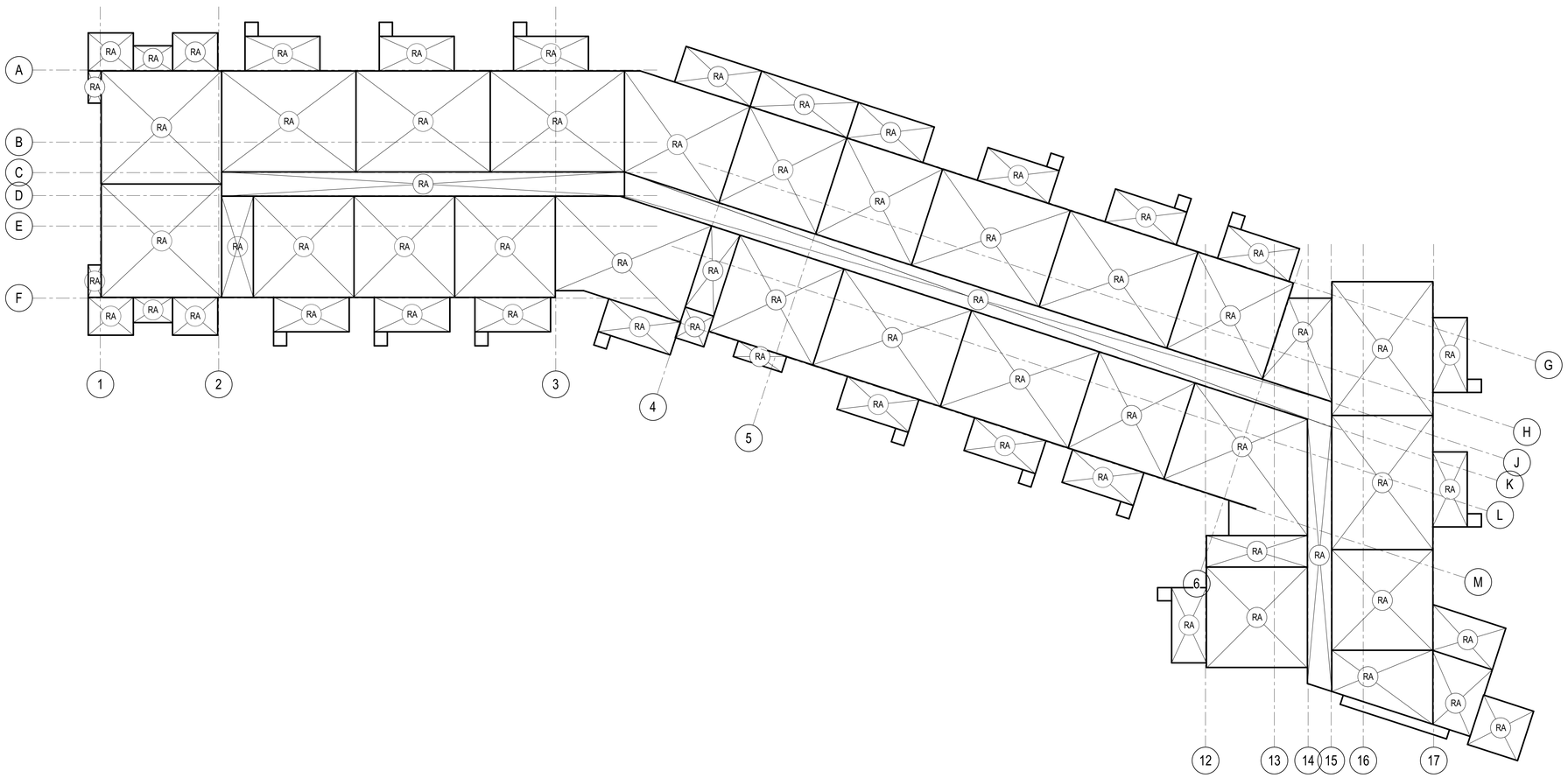

1 **ROOF DIAPHRAGM PLAN**

1/16" = 1'-0"

0 4' 8' 16'
SCALE IN FEET

in site architects
1000 university ave. w. suite 130
st. paul, minnesota 55104
612-252-4820

NOTICE:
ALTERATION OF THIS DOCUMENT SHALL INVALIDATE THE PROFESSIONAL ENGINEER'S SEAL AND SIGNATURE. THIS DOCUMENT DOES NOT SURRUGATE FROM RESERVED OWNERSHIP RIGHTS IN IT. THIS DOCUMENT IS FOR USE ONLY FOR THE PROJECT DESCRIBED IN THE TITLE BLOCK AND MAY NOT TO BE USED FOR REPAIR, REMODEL, OR ADDITION TO THIS PROJECT OR FOR ANY OTHER PROJECT.

WESLEY BRADLEY PARK 2
EAST BROWNSTONE

707 39TH AVENUE SE
PUYALLUP, WA 98374

PERMIT
RESUBMITTAL
03/01/2024

ORIGINAL ISSUE: 08/17/16

REVISIONS

No.	Description	Date

2220236.20
PROJECT NUMBER

KJK DRAWN BY
ADM CHECKED BY

WESLEY BRADLEY PARK 2
EAST BROWNSTONE

ROOF DIAPHRAGM PLAN

S1.7-B

AHBL
TACOMA SEATTLE SPOKANE TRI-CITIES
2215 North 30th Street, Suite 300, Tacoma,WA 98403
253.383.2422 TEL 253.383.2572 FAX www.ahbl.com WEB

3/1/2024 7:22:43 PM

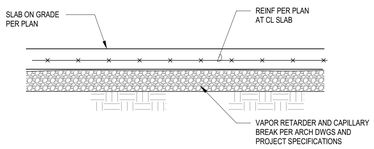

1 SECTION
1" = 1'-0" 1 / S2.1-B

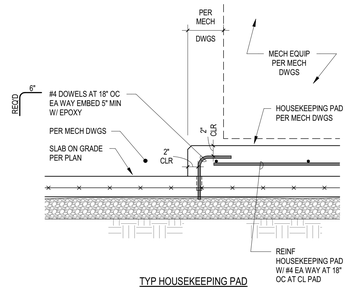

TYP HOUSEKEEPING PAD

2 SECTION
1" = 1'-0" 2 / S2.1-B

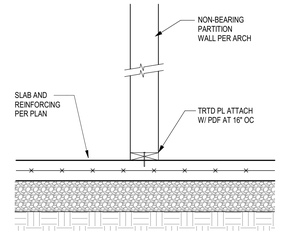

3 SECTION
1" = 1'-0" 3 / S2.1-B

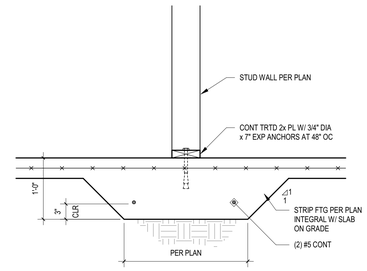

4 SECTION
1" = 1'-0" 4 / S2.1-B

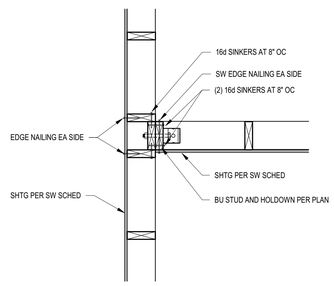

TYPICAL SHEAR WALL INTERSECTION

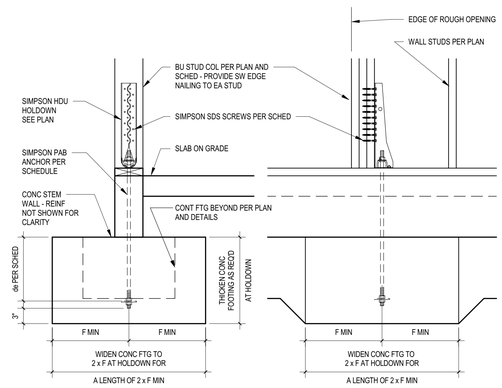

TYPICAL HOLDOWN REQUIREMENTS

HOLDOWN SCHEDULE

MARK	HOLDOWN	FOUNDATION ANCHOR	de	F	FASTENERS	MINIMUM WOOD MEMBER THICKNESS	ALLOWABLE TENSION LOAD
H2	SIMP HDU2	SIMP PAB5	6"	9"	(6) SIMP SDS 1/4" x 2 1/2"	3"	3075#
H4	SIMP HDU4	SIMP PAB5	6"	9"	(10) SIMP SDS 1/4" x 2 1/2"	3"	4565#
H5	SIMP HDU5	SIMP PAB5	6"	9"	(14) SIMP SDS 1/4" x 2 1/2"	3"	5645#
H8	SIMP HDU8	SIMP PAB7	10"	15"	(20) SIMP SDS 1/4" x 2 1/2"	4 1/2"	7870#
H11	SIMP HDU11	SIMP PAB8	12"	18"	(30) SIMP SDS 1/4" x 2 1/2"	5 1/2"	9535#
H14	SIMP HDU14	SIMP PAB8	12"	18"	(36) SIMP SDS 1/4" x 2 1/2"	6x6	14445#

HOLDOWN SCHEDULE NOTES:

1. ALLOWABLE LOADS ARE VALID FOR HOLDOWN FLUSH OR RAISED OFF SILL PLATE.
2. TABULATED LOADS MAY BE DOUBLED WHEN THE HDU IS INSTALLED ON OPPOSITE SIDES OF THE WOOD MEMBER PROVIDED EITHER THE POST IS LARGE ENOUGH TO PREVENT OPPOSING HOLDOWN SCREW INTERFERENCE, OR THE HOLDOWNS ARE OFFSET TO ELIMINATE SCREW INTERFERENCE.
3. SIMP PAB8 SHALL USE A HEAVY HEX ANCHOR NUT.
4. AT POST-TENSIONED SLAB SEE 6 / S3.1-B AND 7 / S3.1-B.
5. AT CONCRETE WALL SEE 8 / S3.1-B.

5 PLAN
1" = 1'-0" 5 / S2.1-B

6 SECTION
1" = 1'-0" 6 / S2.1-B

in site architects
1000 university ave. w. suite 130
st. paul, minnesota 55104
612-252-4820

NOTICE:
ALTERATION OF THIS DOCUMENT SHALL INVALIDATE THE PROFESSIONAL ENGINEER'S SEAL AND SIGNATURE. THIS DOCUMENT DOES NOT DERIVE FROM RESERVED OWNERSHIP RIGHTS IN IT. THIS DOCUMENT IS FOR USE ONLY FOR THE PROJECT SHOWN ABOVE. IT SHOULD NOT BE USED FOR ANY OTHER PURPOSE, REPAIR, REMODEL, OR ADDITION TO THIS PROJECT OR FOR ANY OTHER PROJECT.

WESLEY BRADLEY PARK 2
EAST BROWNSTONE
707 39TH AVENUE SE
PUYALLUP, WA 98374

PERMIT
RESUBMITTAL
03/01/2024

ORIGINAL ISSUE: 08/11/17

REVISIONS

No.	Description	Date

2220236.20
PROJECT NUMBER

KJK DRAWN BY
ADM CHECKED BY

WESLEY BRADLEY PARK 2
EAST BROWNSTONE

AHBL
TACOMA SEATTLE SPOKANE TRI-CITIES
2215 North 30th Street, Suite 300, Tacoma,WA 98403
253.383.2422 TEL 253.383.2572 FAX www.ahbl.com WEB

FOUNDATION DETAILS
S2.1-B

3/1/2024 7:22:47 PM

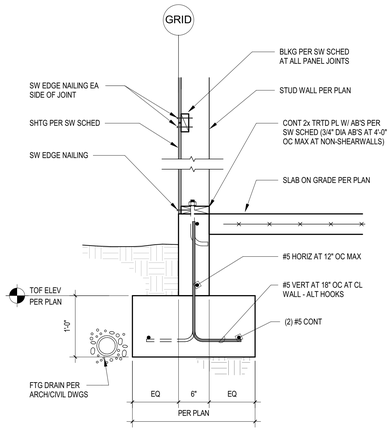

1 **SECTION**

1" = 1'-0" 1 / S2.2-B

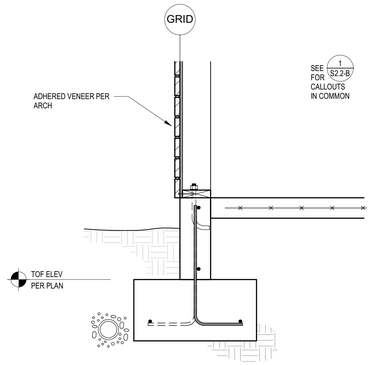

2 **SECTION**

1" = 1'-0" 2 / S2.2-B

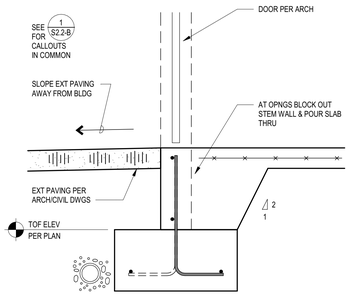

3 **SECTION**

1" = 1'-0" 3 / S2.2-B

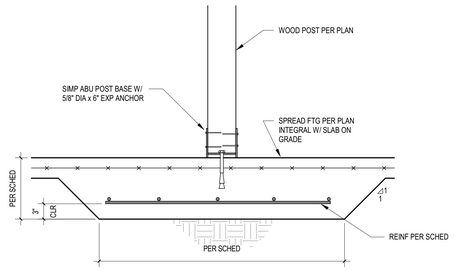

4 **SECTION**

1" = 1'-0" 4 / S2.2-B

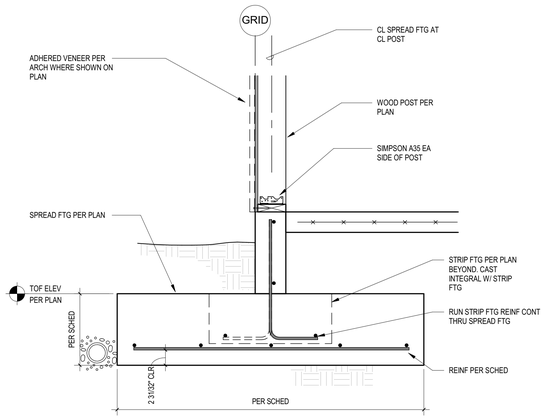

5 **SECTION**

1" = 1'-0" 5 / S2.2-B

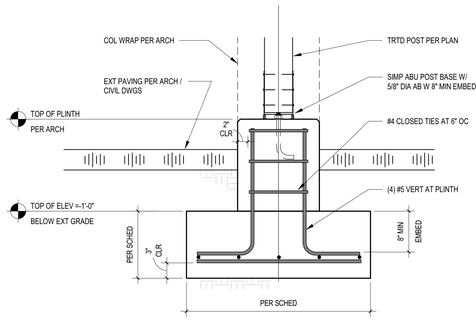

6 **SECTION**

1" = 1'-0" 6 / S2.2-B

in site architects
1000 university ave. w. # suite 130
st. paul, minnesota 55104
612-252-4820

NOTICE:
ALTERATION OF THIS DOCUMENT SHALL INVALIDATE THE PROFESSIONAL ENGINEER'S SEAL AND SIGNATURE. THIS DOCUMENT DOES NOT DERIVE FROM RESERVED OWNERSHIP RIGHTS IN IT. THIS DOCUMENT IS FOR USE ON ONLY FOR THE PROJECT SHOWN HEREIN. IN ADDITION, IT MAY NOT BE USED FOR REPAIR, REMODEL, OR ADDITION TO THIS PROJECT OR FOR ANY OTHER PROJECT.

WESLEY BRADLEY PARK 2
EAST BROWNSTONE

707 39TH AVENUE SE
PUYALLUP, WA 98374

PERMIT RESUBMITTAL
03/01/2024

ORIGINAL ISSUE: 01/25/19

REVISIONS

No.	Description	Date

2220236.20
PROJECT NUMBER

KJK DRAWN BY
ADM CHECKED BY

WESLEY BRADLEY PARK 2
EAST BROWNSTONE

FOUNDATION DETAILS

S2.2-B

AHBL
TACOMA SEATTLE SPOKANE TRI-CITIES
2215 North 30th Street, Suite 300, Tacoma,WA 98403
253.383.2422 TEL 253.383.2572 FAX www.ahbl.com WEB

3/1/2024 7:22:50 PM

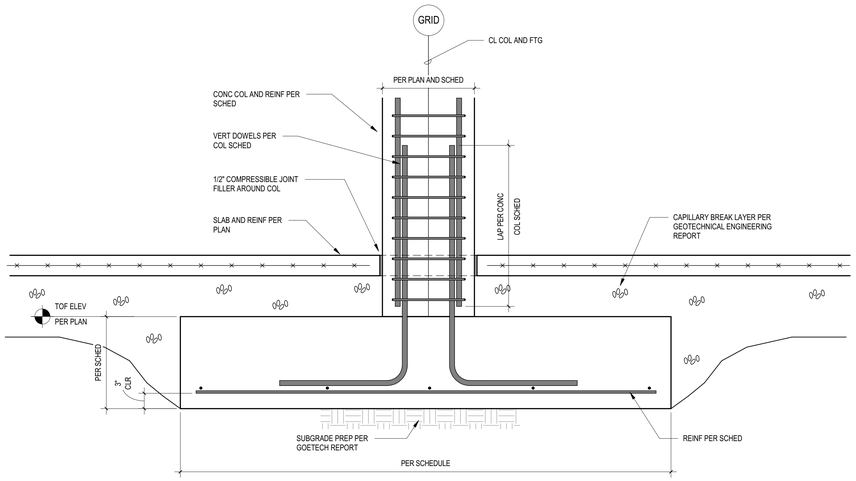

1 SECTION

1" = 1'-0" 1 / S2.3-B

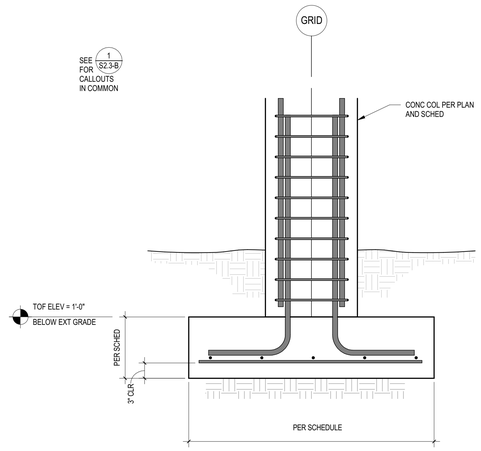

2 SECTION

1" = 1'-0" 2 / S2.3-B

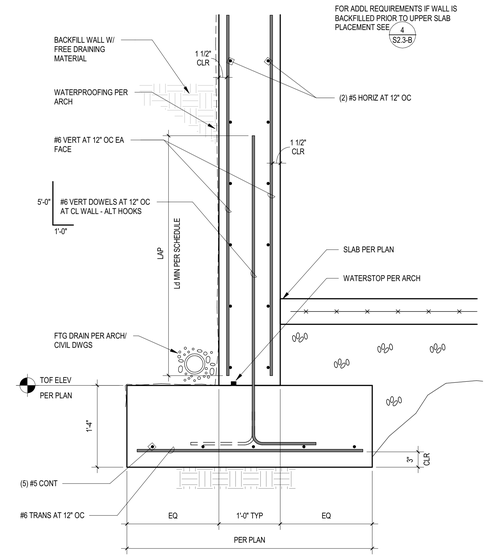

3 SECTION

1" = 1'-0" 3 / S2.3-B

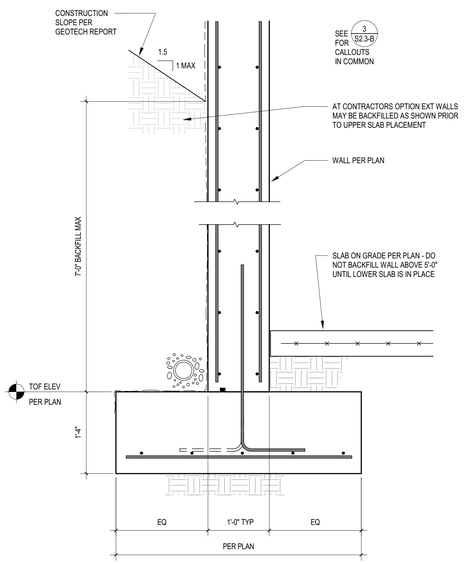

4 SECTION

1" = 1'-0" 4 / S2.3-B

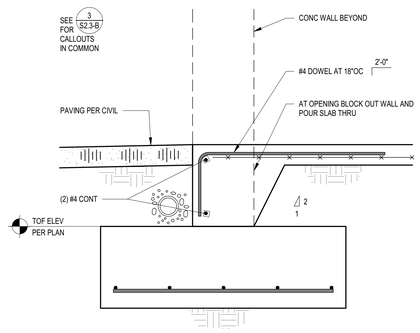

5 SECTION

1" = 1'-0" 5 / S2.3-B

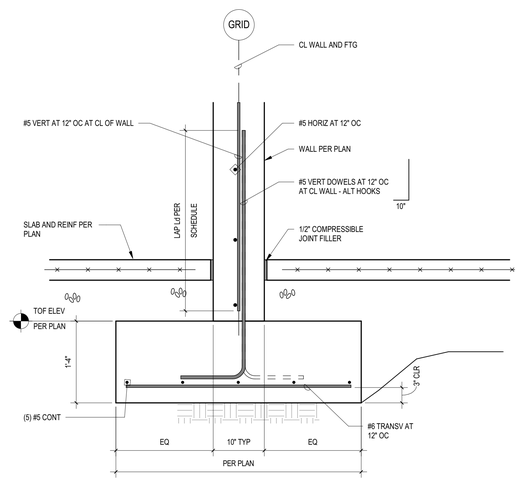

6 SECTION

1" = 1'-0" 6 / S2.3-B

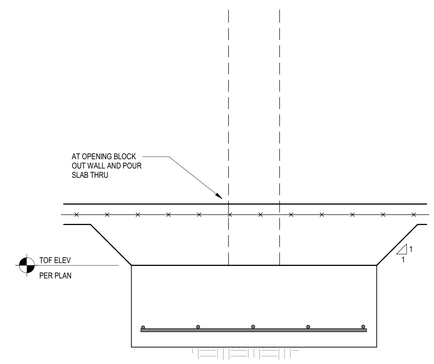

7 SECTION

1" = 1'-0" 7 / S2.3-B

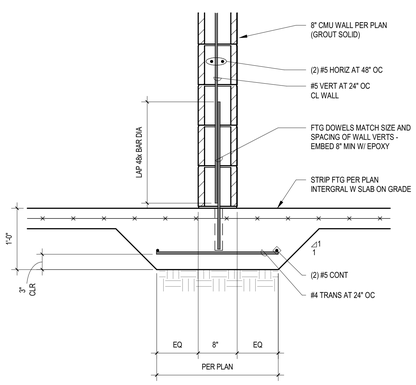

8 SECTION

1" = 1'-0" 8 / S2.3-B

3/1/2024 7:22:54 PM

in site architects
1000 university ave. w. suite 130
st. paul, minnesota 55104
612-252-4820

NOTICE:
ALTERATION OF THIS DOCUMENT SHALL INVALIDATE THE PROFESSIONAL ENGINEER'S SEAL AND SIGNATURE. THIS DOCUMENT DOES NOT DEROGATE FROM RESERVED OWNERSHIP RIGHTS W.I.T. THIS DOCUMENT IS FOR USE ONLY FOR THE PROJECT IDENTIFIED IN THE TITLE BLOCK AND NOT TO BE USED FOR REPAIR, REMODEL, OR ADDITION TO THIS PROJECT OR FOR ANY OTHER PROJECT.

WESLEY BRADLEY PARK 2
EAST BROWNSTONE

707 39TH AVENUE SE
PUYALLUP, WA 98374

PERMIT RESUBMITTAL 03/01/2024

ORIGINAL ISSUE: 11/10/15

REVISIONS

No.	Description	Date

2220236.20
PROJECT NUMBER

KJK DRAWN BY
ADM CHECKED BY

WESLEY BRADLEY PARK 2
EAST BROWNSTONE

FOUNDATION DETAILS

S2.3–B

AHBL
TACOMA SEATTLE SPOKANE TRI-CITIES
2215 North 30th Street, Suite 300, Tacoma,WA 98403
253.383.2422 TEL 253.383.2572 FAX www.ahbl.com WEB

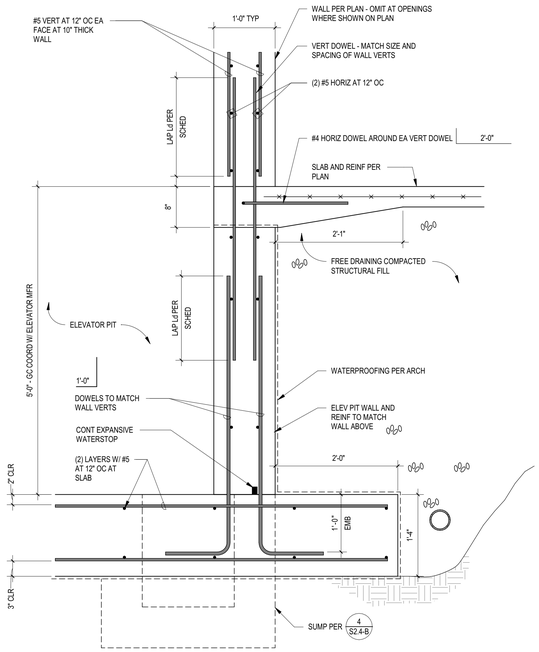

1 SECTION

1" = 1'-0" 1 / S2.4-B

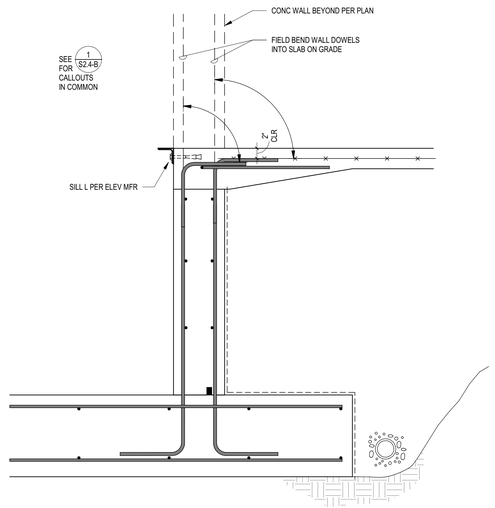

2 SECTION

1" = 1'-0" 2 / S2.4-B

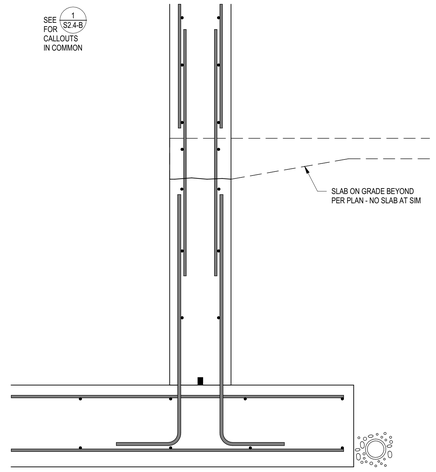

3 SECTION

1" = 1'-0" 3 / S2.4-B

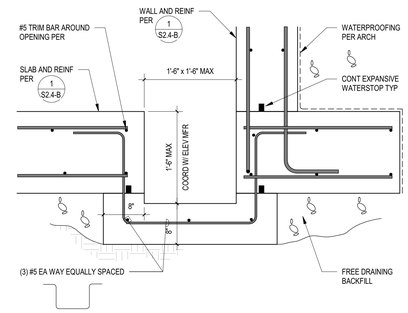

4 SECTION

1" = 1'-0" 4 / S2.4-B

in site architects
1000 university ave. w. suite 130
st. paul, minnesota 55104
612-252-4820

NOTICE:
ALTERATION OF THIS DOCUMENT SHALL INVALIDATE THE PROFESSIONAL ENGINEER'S SEAL AND SIGNATURE. THIS DOCUMENT DOES NOT SURRENDER FROM RESERVED OWNERSHIP RIGHTS IN IT. THIS DOCUMENT IS FOR USE ONLY FOR THE PROJECT IDENTIFIED IN IT. IT SHOULD NOT BE USED FOR ANY OTHER REPAIR, REMODEL, OR ADDITION TO THAT PROJECT OR FOR ANY OTHER PROJECT.

WESLEY BRADLEY PARK 2
EAST BROWNSTONE

707 39TH AVENUE SE
PUYALLUP, WA 98374

PERMIT RESUBMITTAL
03/01/2024

ORIGINAL ISSUE: 02/07/18

REVISIONS

No.	Description	Date

2220236.20
PROJECT NUMBER

KJK DRAWN BY
ADM CHECKED BY

WESLEY BRADLEY PARK 2
EAST BROWNSTONE

AHBL
TACOMA SEATTLE SPOKANE TRI-CITIES
2215 North 30th Street, Suite 300, Tacoma,WA 98403
253.383.2422 TEL 253.383.2572 FAX www.ahbl.com WEB

FOUNDATION DETAILS

S2.4-B

3/1/2024 7:22:57 PM

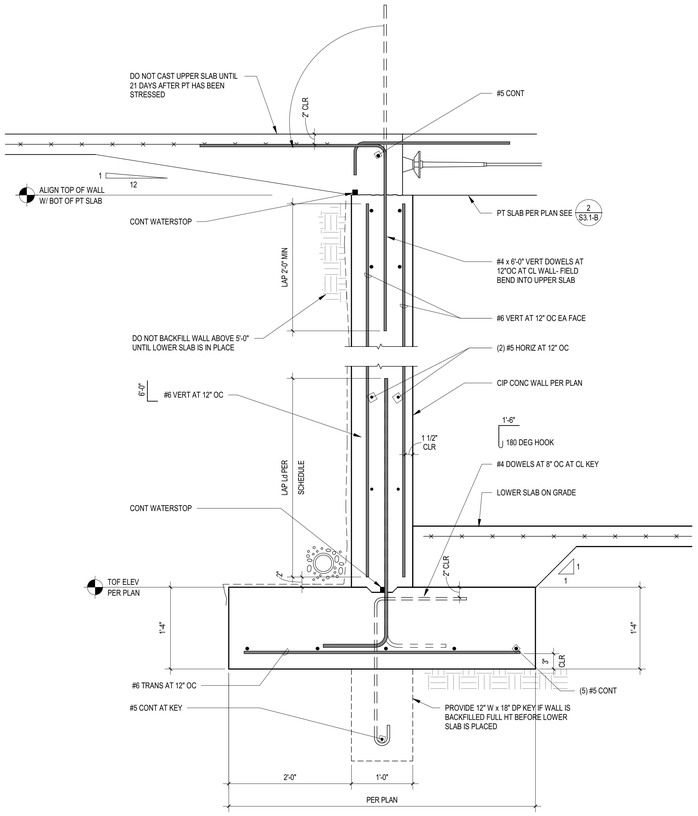

1 SECTION

1" = 1'-0" 1 / S2.5-B

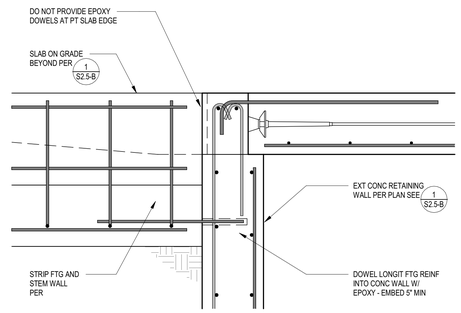

2 SECTION

1" = 1'-0" 2 / S2.5-B

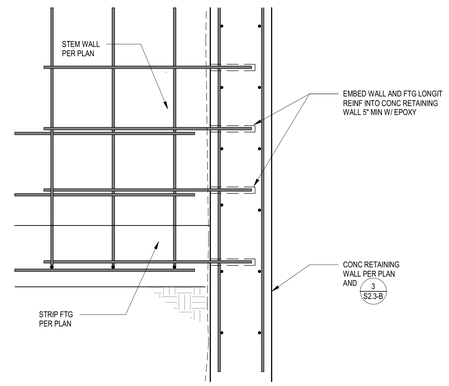

3 SECTION

1" = 1'-0" 3 / S2.5-B

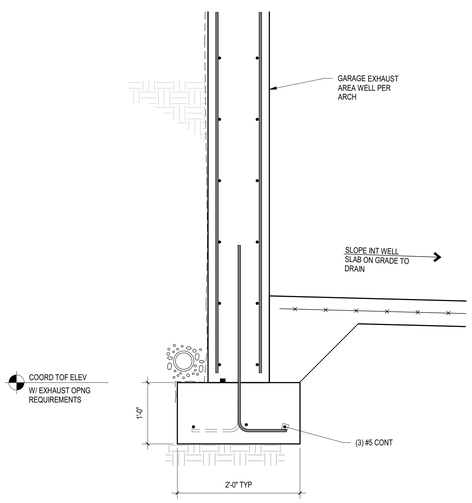

4 SECTION

1" = 1'-0" 4 / S2.5-B

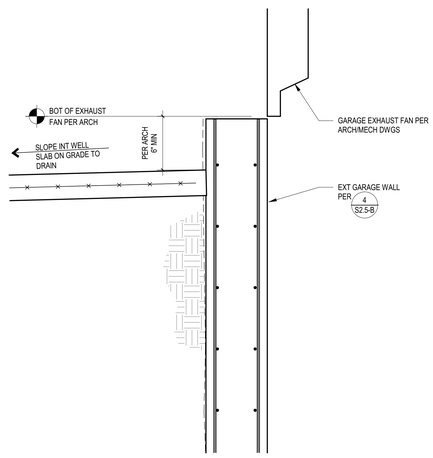

5 SECTION

1" = 1'-0" 5 / S2.5-B

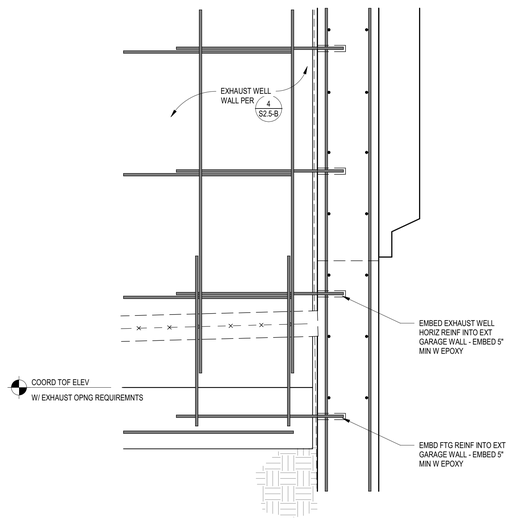

6 SECTION

1" = 1'-0" 6 / S2.5-B

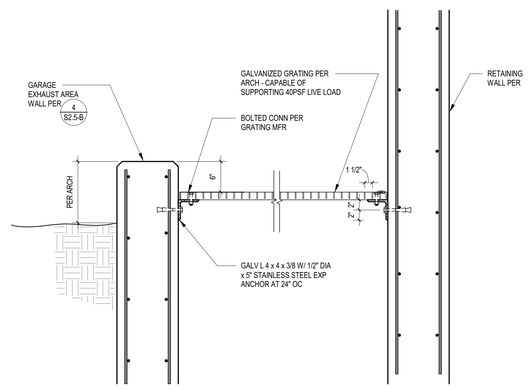

7 SECTION

1" = 1'-0" 7 / S2.5-B

in site architects
1000 university ave. w. suite 130
st. paul, minnesota 55104
612-252-4820

NOTICE:
ALTERATION OF THIS DOCUMENT SHALL INVALIDATE THE PROFESSIONAL ENGINEER'S SEAL AND SIGNATURE. THIS DOCUMENT DOES NOT SURRENDER FROM RESERVED OWNERSHIP RIGHTS IN IT. THIS DOCUMENT IS FOR USE ON ONLY FOR THE PROJECT SHOWN HEREIN. IT SHOULD NOT BE USED FOR ANY OTHER PURPOSE, REPAIR, REMODEL, OR ADDITION TO THIS PROJECT OR FOR ANY OTHER PROJECT.

WESLEY BRADLEY PARK 2
EAST BROWNSTONE

707 39TH AVENUE SE
PUYALLUP, WA 98374

PERMIT RESUBMITTAL
03/01/2024

ORIGINAL ISSUE: 02/27/19

REVISIONS

No.	Description	Date

2220236.20
PROJECT NUMBER

KJK DRAWN BY
ADM CHECKED BY

WESLEY BRADLEY PARK 2
EAST BROWNSTONE

FOUNDATION DETAILS

S2.5-B

AHBL
TACOMA SEATTLE SPOKANE TRI-CITIES
2215 North 30th Street, Suite 300, Tacoma,WA 98403
253.383.2422 TEL 253.383.2572 FAX www.ahbl.com WEB

3/1/2024 7:23:01 PM

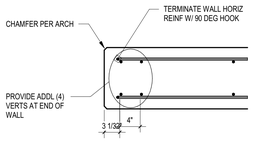

TYPICAL ENDWALL CONDITION

1 SECTION
1" = 1'-0" 1/ S2.6-B

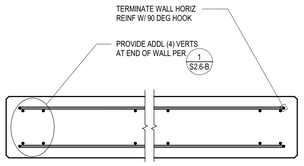

WALL PIERS 6'-0" OR LESS

2 SECTION
1" = 1'-0" 2 / S2.6-B

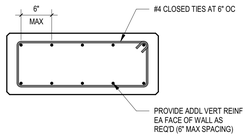

WALL PIERS 2'-0" OR LESS

3 SECTION
1" = 1'-0" 3 / S2.6-B

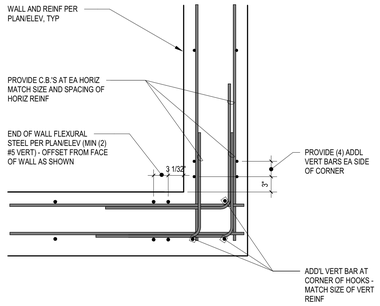

4 SECTION
1" = 1'-0" 4 / S2.6-B

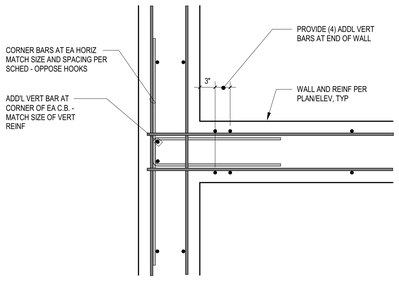

5 SECTION
1" = 1'-0" 5 / S2.6-B

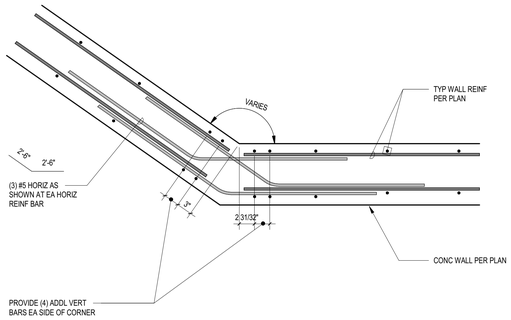

6 SECTION
1" = 1'-0" 6 / S2.6-B

in site architects
1000 university ave. w. suite 130
st. paul, minnesota 55104
612-252-4820

NOTICE:
ALTERATION OF THIS DOCUMENT SHALL INVALIDATE THE PROFESSIONAL ENGINEER'S SEAL AND SIGNATURE. THIS DOCUMENT DOES NOT SEPARATE FROM RESERVED OWNERSHIP RIGHTS IN IT. THIS DOCUMENT IS FOR USE ONLY FOR THE PROJECT SHOWN BELOW. IT IS NOT TO BE USED FOR ANY OTHER PURPOSE, NOR ADDITIONS TO THIS PROJECT OR FOR ANY OTHER PROJECT.

WESLEY BRADLEY PARK 2
EAST BROWNSTONE
707 39TH AVENUE SE
PUYALLUP, WA 98374

PERMIT RESUBMITTAL
03/01/2024

ORIGINAL ISSUE: 02/27/19

REVISIONS

No.	Description	Date

2220236.20
PROJECT NUMBER

KJK DRAWN BY
ADM CHECKED BY

WESLEY BRADLEY PARK 2
EAST BROWNSTONE

AHBL
TACOMA SEATTLE SPOKANE TRI-CITIES
2215 North 30th Street, Suite 300, Tacoma,WA 98403
253.383.2422 TEL 253.383.2572 FAX www.ahbl.com WEB

FOUNDATION DETAILS
S2.6-B

3/1/2024 7:23:04 PM

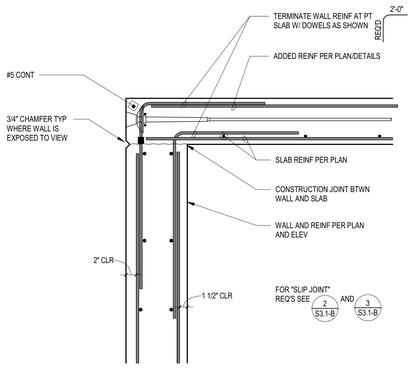

TYPICAL PT SLAB TO WALL CONN

1 SECTION

1" = 1'-0" 1 / S3.1-B

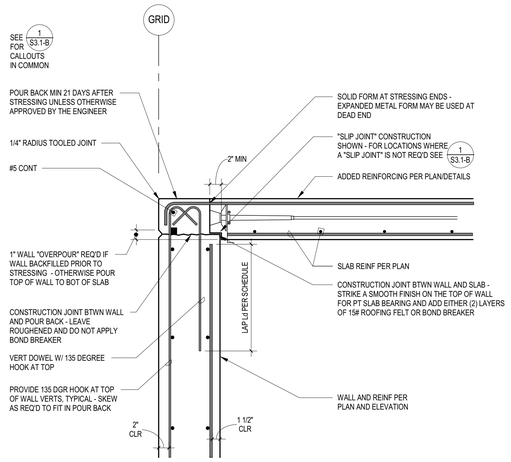

"SLIP JOINT" CONN

2 SECTION

1" = 1'-0" 2 / S3.1-B

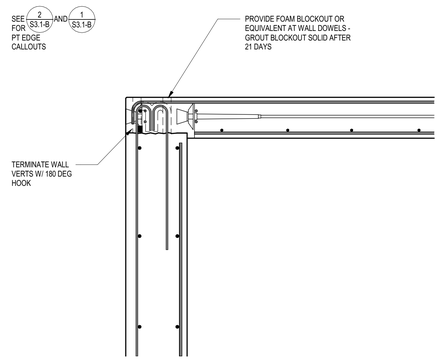

ALTERNATE "SLIP JOINT" CONN

3 SECTION

1" = 1'-0" 3 / S3.1-B

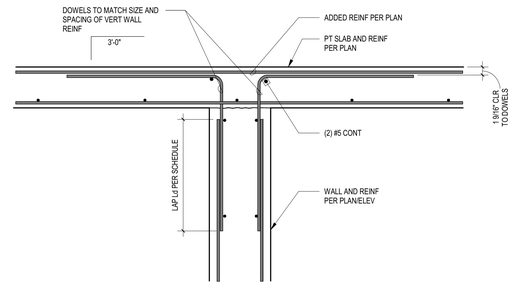

TYPICAL INTERIOR WALL JOINT - WALL BELOW

4 SECTION

1" = 1'-0" 4 / S3.1-B

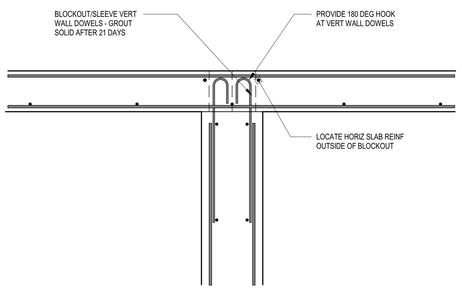

"SLIP JOINT" CONNECTION

5 SECTION

1" = 1'-0" 5 / S3.1-B

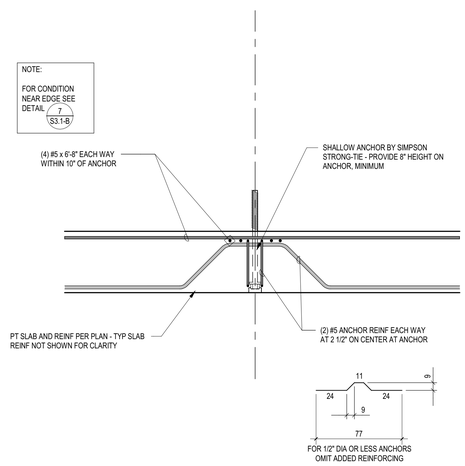

6 SECTION

1" = 1'-0" 6 / S3.1-B

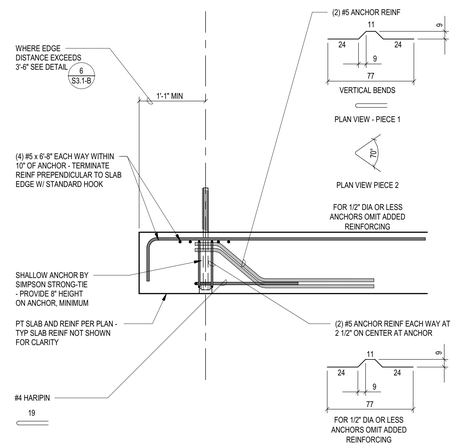

7 SECTION

1" = 1'-0" 7 / S3.1-B

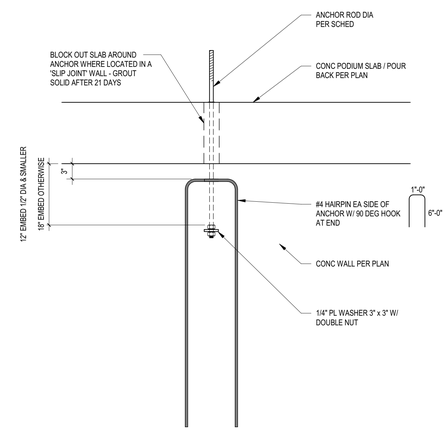

8 SECTION

1" = 1'-0" 8 / S3.1-B

in site architects
1000 university ave. w. suite 130
st. paul, minnesota 55104
612-252-4820

NOTICE:
ALTERATION OF THIS DOCUMENT SHALL INVALIDATE THE PROFESSIONAL ENGINEER'S SEAL AND SIGNATURE. THIS DOCUMENT DOES NOT DERIVE FROM RESERVED OWNERSHIP RIGHTS IN IT. THIS DOCUMENT IS FOR USE ONLY FOR THE PROJECT IDENTIFIED IN IT. THIS DOCUMENT IS NOT TO BE USED FOR REPAIR, REMODEL, OR ADDITION TO THIS PROJECT OR FOR ANY OTHER PROJECT.

WESLEY BRADLEY PARK 2
EAST BROWNSTONE

707 39TH AVENUE SE
PUYALLUP, WA 98374

PERMIT RESUBMITTAL
03/01/2024

ORIGINAL ISSUE: 08/17/16

REVISIONS

No.	Description	Date

2220236.20
PROJECT NUMBER

KJK DRAWN BY
ADM CHECKED BY

WESLEY BRADLEY PARK 2
EAST BROWNSTONE

CONCRETE FLOOR DETAILS

S3.1-B

AHBL
TACOMA SEATTLE SPOKANE TRI-CITIES
2215 North 30th Street, Suite 300, Tacoma,WA 98403
253.383.2422 TEL 253.383.2572 FAX www.ahbl.com WEB

3/1/2024 7:23:08 PM

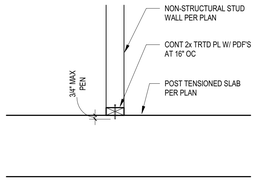

1 SECTION
1" = 1'-0" 1 / S3.2-B

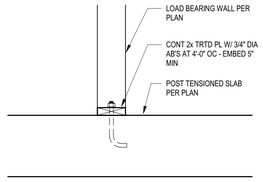

2 SECTION
1" = 1'-0" 2 / S3.2-B

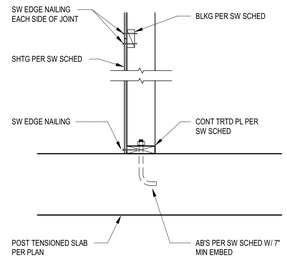

3 SECTION
1" = 1'-0" 3 / S3.2-B

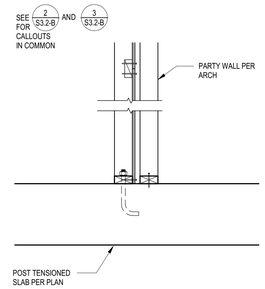

4 SECTION
1" = 1'-0" 4 / S3.2-B

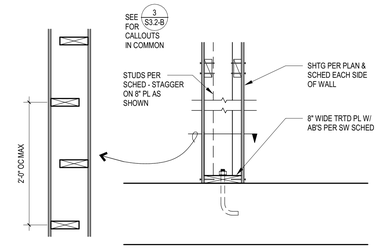

5 SECTION
1" = 1'-0" 5 / S3.2-B

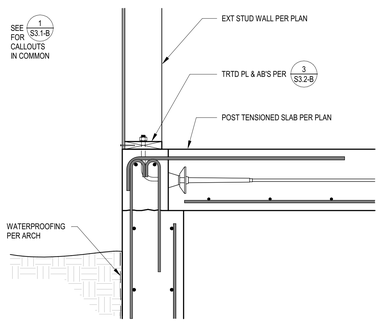

6 SECTION
1" = 1'-0" 6 / S3.2-B

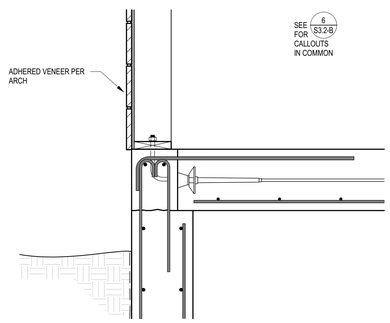

7 SECTION
1" = 1'-0" 7 / S3.2-B

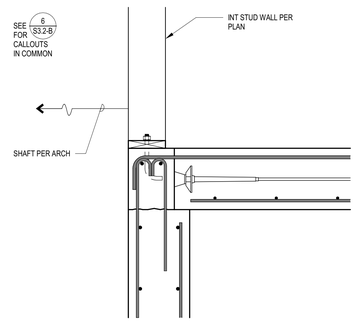

8 SECTION
1" = 1'-0" 8 / S3.2-B

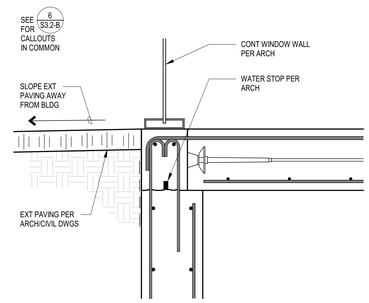

9 SECTION
1" = 1'-0" 9 / S3.2-B

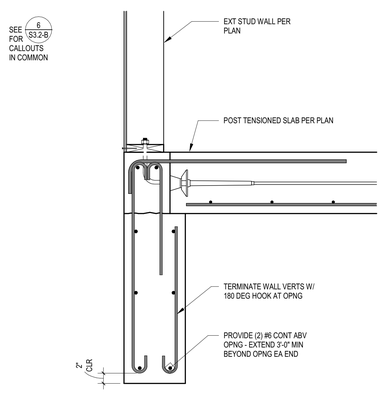

TYPICAL OPENING CONDITION

10 SECTION
1" = 1'-0" 10 / S3.2-B

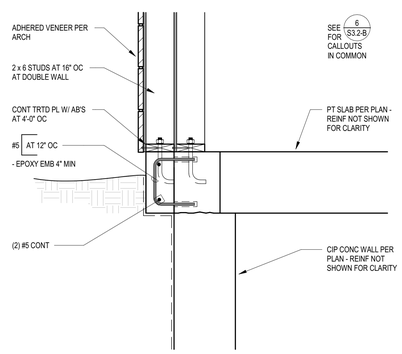

11 SECTION
1" = 1'-0" 11 / S3.2-B

in site architects
1000 university ave. w. suite 130
st. paul, minnesota 55104
612-252-4820

NOTICE:
ALTERATION OF THIS DOCUMENT SHALL INVALIDATE THE PROFESSIONAL ENGINEER'S SEAL AND SIGNATURE. THIS DOCUMENT DOES NOT DERIVE FROM RESERVED OWNERSHIP RIGHTS IN IT. THIS DOCUMENT IS FOR USE ON ONLY FOR THE PROJECT DESCRIBED IN IT. IT SHOULD NOT BE USED FOR ANY OTHER PURPOSE, REPAIR, REMODEL, OR ADDITION TO THIS PROJECT OR FOR ANY OTHER PROJECT.

WESLEY BRADLEY PARK 2
EAST BROWNSTONE
707 39TH AVENUE SE
PUYALLUP, WA 98374

PERMIT RESUBMITTAL
03/01/2024

ORIGINAL ISSUE: 02/07/18

REVISIONS

No.	Description	Date

2220236.20
PROJECT NUMBER

KJK DRAWN BY
ADM CHECKED BY

WESLEY BRADLEY PARK 2
EAST BROWNSTONE

CONCRETE FLOOR DETAILS

S3.2-B

AHBL
TACOMA SEATTLE SPOKANE TRI-CITIES
2215 North 30th Street, Suite 300, Tacoma,WA 98403
253.383.2422 TEL 253.383.2572 FAX www.ahbl.com WEB

3/1/2024 7:23:12 PM

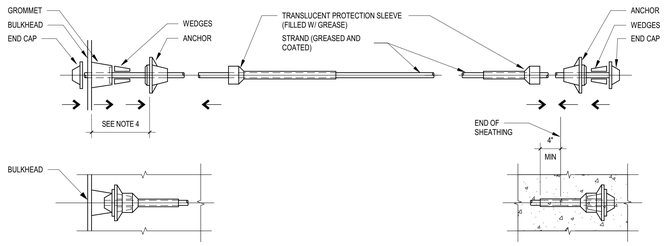

AT STRESSING END

NOTES:

1 LOCATE ANCHOR AT BULKHEAD PER FRAMING PLANS.

2 INSTALL GROMMET FLUSH BETWEEN BULKHEAD AND ANCHOR FOR TIGHT SEAL.

3 SLIDE GREASE-FILLED PROTECTION SLEEVE TIGHT AGAINST ANCHOR PROVIDING 4" MIN OVERLAP BETWEEN SLEEVE AND END OF SHEATHING.

4 AFTER POURING, AT TIME OF STRESSING, REMOVE GROMMET AND INSERT WEDGES.

5 AFTER STRESSING AND ENGINEER'S APPROVAL OF STRESSING RECORD, CUT STRAND 1 1/2" - 1" BEYOND WEDGES PER SHEET S0.1 AND GREASE END CAP PRIOR TO INSERTING IT TIGHT AGAINST ANCHOR. SEE STRUCTURAL NOTES FOR ADDITIONAL INFORMATION.

6 FILL STRESSING POCKET PER STRUCTURAL NOTES.

AT DEAD END

NOTES:

1 LOCATE ANCHOR AT BULKHEAD PER FRAMING PLANS.

2 IF FABRICATED IN SHOP INCLUDE WEDGES, GREASE CAP AND GREASE-FILLED.

3 IF FIELD SEATING IS REQUIRED, BE SURE ALL COMPONENTS ARE TIGHT TO ANCHOR.

TYPICAL POST-TENSIONING ENCAPSULATION DETAILS

1 SECTION

NTS 1 / S4.1-B

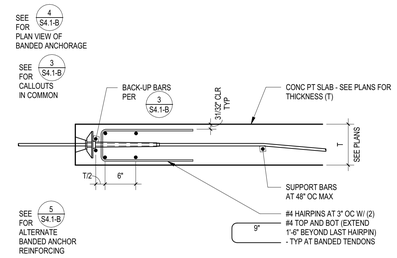

TYPICAL SLAB EDGE AT BANDED TENDONS

2 SECTION

1" = 1'-0" 2 / S4.1-B

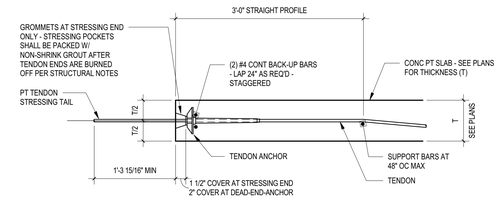

TYPICAL SLAB EDGE AT DISTRIBUTED TENDONS

3 SECTION

1" = 1'-0" 3 / S4.1-B

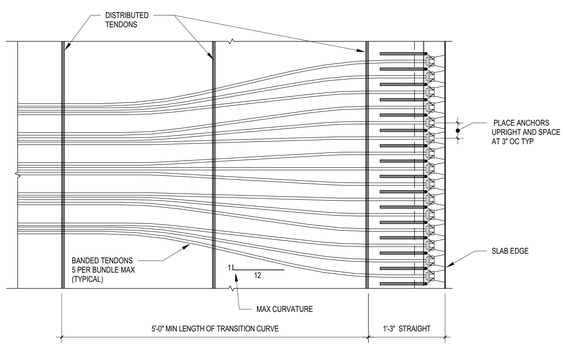

TYPICAL PLAN VIEW OF BANDED TENDON ANCHORAGE

4 SECTION

NTS 4 / S4.1-B

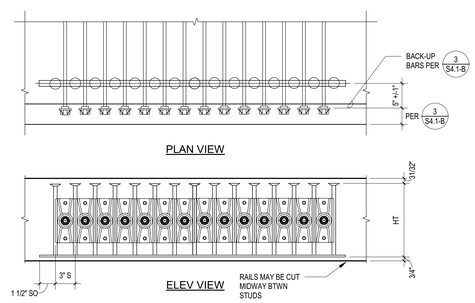

USE NUMBER OF RAILS AS REQUIRED TO ENCLOSE ALL BANDED TENDONS AT STRESSING ENDS.

ALTERNATE BANDED ANCHOR REINFORCING	
	10" SLAB
NUMBER OF RAILS	AS REQ'D
STUD PER RAILS	AS REQ'D
SO	1 1/2"
STUD DIA	3/8"
STUD SPACING, S	3"
O.A. RAIL HT	8 1/4"

5 TYPICAL

1" = 1'-0" 5 / S4.1-B

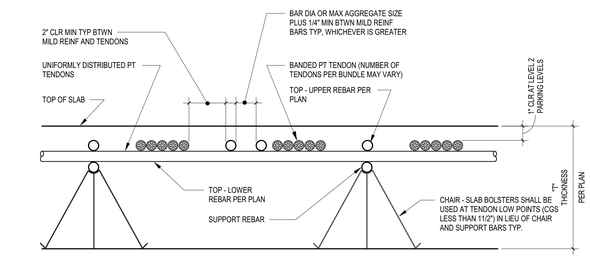

TYPICAL SECTION THRU BANDED PT TENDONS

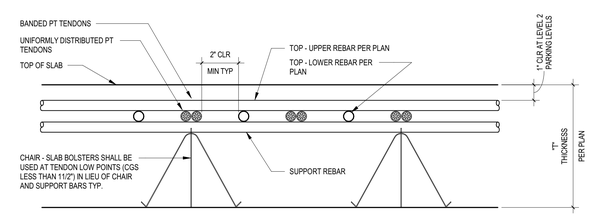

TYPICAL SECTION THRU UNIFORMLY DISTRIBUTED PT TENDONS

6 TYPICAL

NTS 6 / S4.1-B

NOTES:

1. SHORING MUST BE SIZED FOR WEIGHT OF SLAB PLUS ALL CONSTRUCTION LOADS.
2. RE-SHORING CAN BE DONE PROVIDED THE RE-SHORE SYSTEM DOES NOT DEFLECT AXIALLY AND IF THE RE-SHORING PROCEDURE DOES NOT ALLOW THE SLAB TO DEFLECT VERTICALLY.

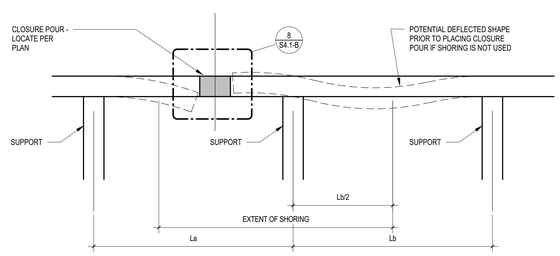

CLOSURE POUR SHORING REQUIREMENTS

7 SECTION

NTS 7 / S4.1-B

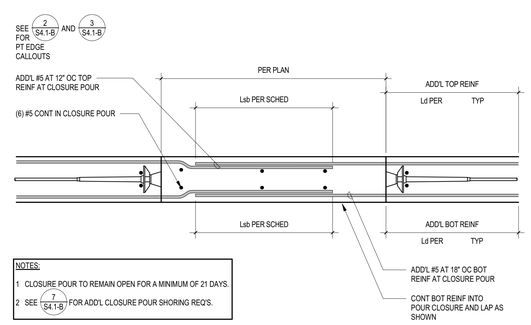

NOTES:

1 CLOSURE POUR TO REMAIN OPEN FOR A MINIMUM OF 21 DAYS.

2 SEE 7 S4.1-B FOR ADD'L CLOSURE POUR SHORING REQ'S.

CLOSURE POUR DETAILS

8 SECTION

1" = 1'-0" 8 / S4.1-B

in site architects
1000 university ave. w. suite 130
st. paul, minnesota 55104
612-252-4820

NOTICE:

ALTERATION OF THIS DOCUMENT SHALL INVALIDATE THE PROFESSIONAL ENGINEER'S SEAL AND SIGNATURE. THIS DOCUMENT DOES NOT DEROGATE FROM RESERVED OWNERSHIP RIGHTS W.I.T. THIS DOCUMENT IS FOR USE ONLY FOR THE PROJECT SPECIFIED IN IT. IT SHOULD NOT BE USED AT THIS OR ANY OTHER SITE, REMODEL, OR ADDITION TO THIS PROJECT OR FOR ANY OTHER PROJECT.

WESLEY BRADLEY PARK 2
EAST BROWNSTONE

707 39TH AVENUE SE
PUYALLUP, WA 98374

PERMIT RESUBMITTAL 03/01/2024

ORIGINAL ISSUE: 02/07/18

REVISIONS

No.	Description	Date

2220236.20
PROJECT NUMBER

KJK ADM
DRAWN BY CHECKED BY

WESLEY BRADLEY PARK 2
EAST BROWNSTONE

POST-TENSIONED SLAB DETAILS

S4.1-B

AHBL
TACOMA SEATTLE SPOKANE TRI-CITIES
2215 North 30th Street, Suite 300, Tacoma,WA 98403
253.383.2422 TEL 253.383.2572 FAX www.ahbl.com WEB

3/1/2024 7:25:16 PM

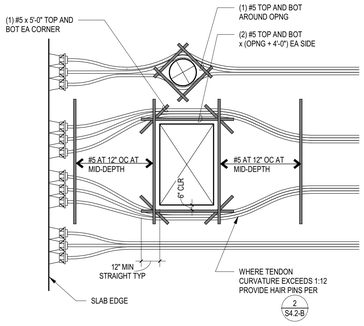

NOTES:

1. OPENING SHALL NOT BE PLACED WITHIN 4'-0" OF ANY COLUMN UNLESS EXACT LOCATIONS OF OPENINGS ARE COORDINATED WITH STRUCTURAL ENGINEER.

2. ROUND OPENINGS MAY BE GROUPED AND REINFORCED SIMILAR TO RECTANGULAR OPENINGS.

3. SPACING OF CIRCULAR OPENINGS:

4. MAX OPENING SIZE: LARGER OF D1 OR D2/D - SPAN: ROUND: 48" DIA RECTANGULAR: 36" x 36"

TYPICAL HORIZONTAL TENDON CURVATURE AND TRIM BARS AROUND OPENINGS

1 PLAN

NTS 1 / S4.2-B

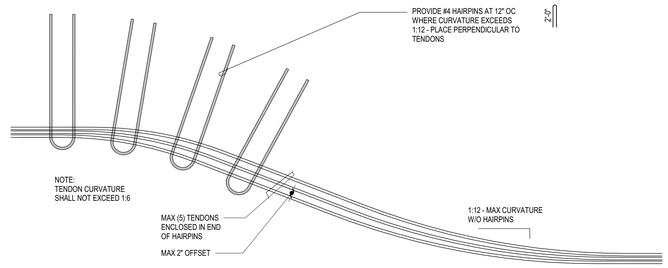

TYPICAL HAIRPINS AT HORIZONTAL TENDON CURVES

2 PLAN

1" = 1'-0" 2 / S4.2-B

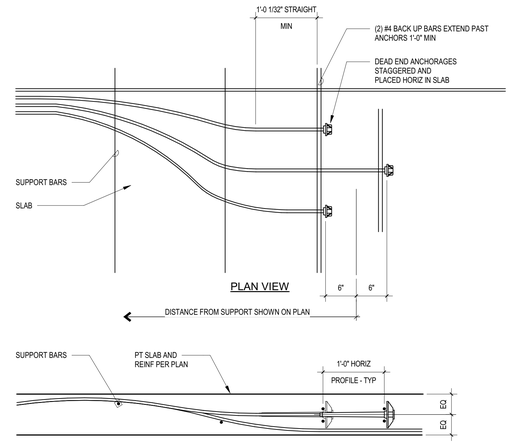

TYPICAL PLACEMENT OF ADDED TENDONS

3 SECTION

1" = 1'-0" 3 / S4.2-B

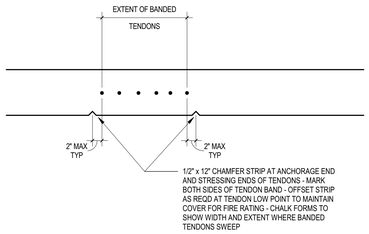

TYPICAL TENDON MARKING - BANDED TENDONS

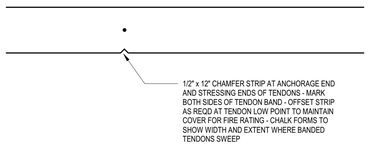

TYPICAL TENDON MARKING - DISTRIBUTED TENDONS

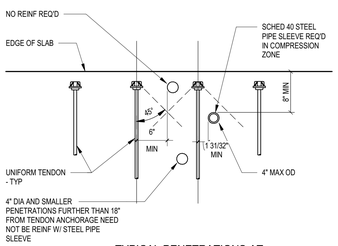

TYPICAL PENETRATIONS AT TENDON ANCHORS

4 PLAN

1" = 1'-0" 4 / S4.2-B

5 SECTION

1" = 1'-0" 5 / S4.2-B

NOTES:

1. (2) STRANDS MINIMUM SHALL PASS DIRECTLY OVER COL IN EACH DIRECTION.

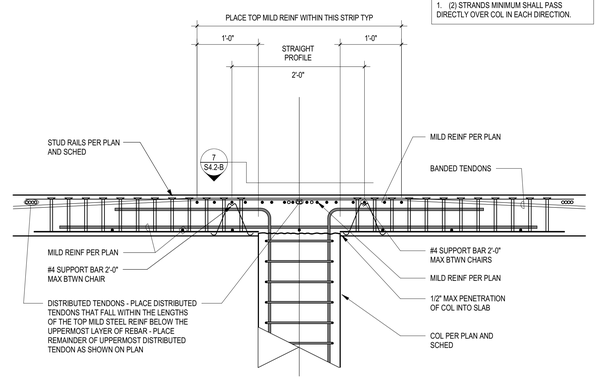

6 SECTION

1" = 1'-0" 6 / S4.2-B

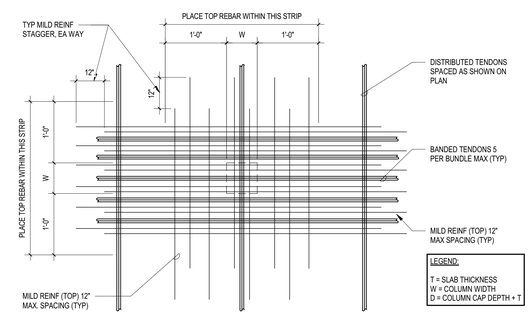

7 PLAN

1" = 1'-0" 7 / S4.2-B

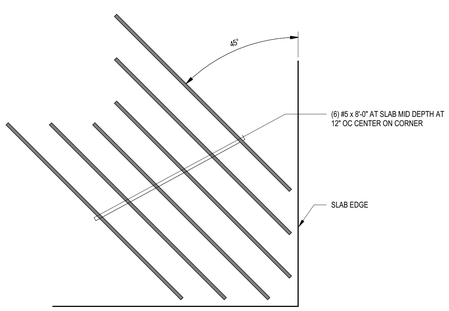

TYPICAL SLAB OUTSIDE CORNER

8 PLAN

1" = 1'-0" 8 / S4.2-B

in site architects
1000 university ave. w. suite 130
st. paul, minnesota 55104
612-252-4820

NOTICE:
ALTERATION OF THIS DOCUMENT SHALL INVALIDATE THE PROFESSIONAL ENGINEER'S SEAL AND SIGNATURE. THIS DOCUMENT DOES NOT SURRENDER FROM RESERVED OWNERSHIP RIGHTS IN IT. THIS DOCUMENT IS FOR USE ONLY FOR THE PROJECT SHOWN HEREON. IT SHALL NOT BE REPRODUCED OR REPRINTED, REMODEL, OR REDESIGN TO THIS PROJECT OR FOR ANY OTHER PROJECT.

WESLEY BRADLEY PARK 2
EAST BROWNSTONE

707 39TH AVENUE SE
PUYALLUP, WA 98374

PERMIT RESUBMITTAL
03/01/2024

ORIGINAL ISSUE: 09/29/15

REVISIONS

No.	Description	Date

2220236.20
PROJECT NUMBER

KJK DRAWN BY
ADM CHECKED BY

WESLEY BRADLEY PARK 2
EAST BROWNSTONE

POST TENSIONED DETAILS

S4.2-B

AHBL
TACOMA SEATTLE SPOKANE TRI-CITIES
2215 North 30th Street, Suite 300, Tacoma,WA 98403
253.383.2422 TEL 253.383.2572 FAX www.ahbl.com WEB

3/1/2024 7:23:19 PM

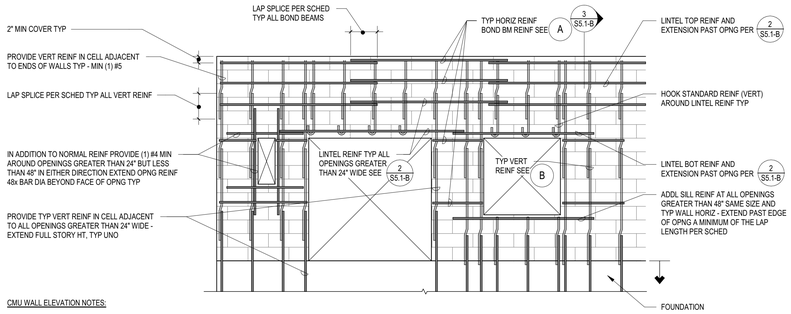

CMU WALL ELEVATION NOTES:

1. TYPICAL REINFORCEMENT SHOWN. PROVIDE MORE IF REQUIRED BY DETAILS.
2. PROVIDE CONTINUOUS BOND BM AT TOP OF WALL.
3. FOR CORNER BARS USE SAME SIZE AND SPACING OF TYPICAL HORIZONTAL REINFORCING. LAP CORNER BARS WITH TYPICAL HORIZONTAL REINFORCING WITH A LAP SPLICE PER SCHEDULE.
4. HOOK ALL REINFORCING THAT CANNOT BE EXTENDED.
5. GROUT ALL CELLS CONTAINING REINFORCING, ANCHOR BOLTS OR OTHER EMBEDDED ITEMS.

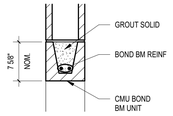

TYPICAL BOND BEAM A

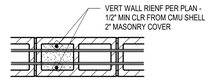

TYPICAL PLACEMENT OF VERT REINF WHEN (2) BARS REQ'D B

TYPICAL MASONRY WALL ELEVATION

1 SECTION

1" = 1'-0" TYPICAL

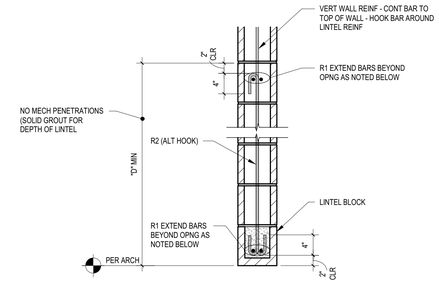

CMU LINTEL SCHEDULE				
MARK	"D" INCHES	R1	R2	REMARKS
ML1	16"	(2) #5	#4 AT 8" OC	EXTEND R1 REINF 3'-6" PAST OPNG EA SIDE

CMU LINTEL SCHEDULE NOTES:

1. PROVIDE ML1 LINTEL TYP FOR ALL OPNGS 24" WIDE OR GREATER.

TYPICAL LINTEL DETAIL

2 SECTION

1" = 1'-0" TYPICAL

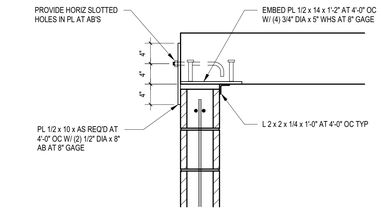

CONDITION AT EDGE OF PT SLAB

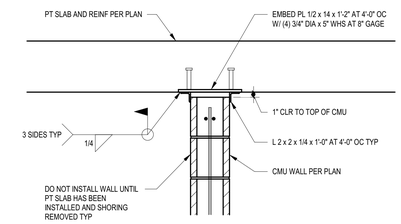

3 SECTION

1" = 1'-0" TYPICAL

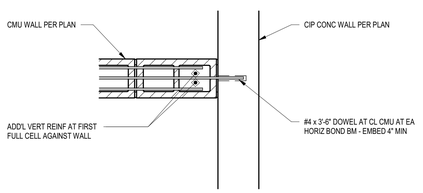

4 PLAN

1" = 1'-0" 4 / S5.1-B

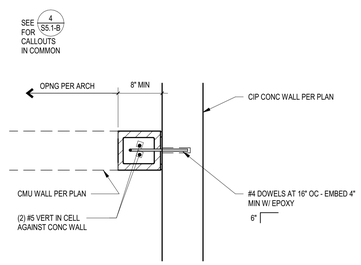

5 PLAN

1" = 1'-0" 5 / S5.1-B

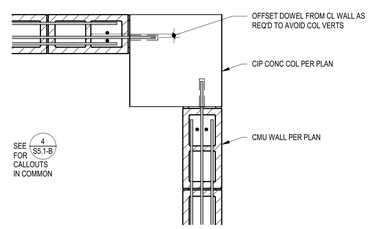

6 PLAN

1" = 1'-0" 6 / S5.1-B

in site architects
1000 university ave. w. suite 130
st. paul, minnesota 55104
612-252-4820

NOTICE:
ALTERATION OF THIS DOCUMENT SHALL INVALIDATE THE ARCHITECT'S SEAL AND SIGNATURE. THIS DOCUMENT AND THIS DOCUMENT DOES NOT SURRENDER FROM RESERVED OWNERSHIP RIGHTS IN IT. THIS DOCUMENT IS FOR USE ONLY FOR THE PROJECT IDENTIFIED IN IT. IT SHOULD NOT BE USED FOR ANY OTHER PURPOSE, REVISED, OR ADDED TO THIS PROJECT OR FOR ANY OTHER PROJECT.

WESLEY BRADLEY PARK 2
EAST BROWNSTONE

707 39TH AVENUE SE
PUYALLUP, WA 98374

PERMIT RESUBMITTAL
03/01/2024

ORIGINAL ISSUE: 08/11/17

REVISIONS

No.	Description	Date

2220236.20
PROJECT NUMBER

KJK DRAWN BY
ADM CHECKED BY

WESLEY BRADLEY PARK 2
EAST BROWNSTONE

CMU WALL DETAILS

S5.1-B

AHBL
TACOMA SEATTLE SPOKANE TRI-CITIES
2215 North 30th Street, Suite 300, Tacoma,WA 98403
253.383.2422 TEL 253.383.2572 FAX www.ahbl.com WEB

3/1/2024 7:23:23 PM

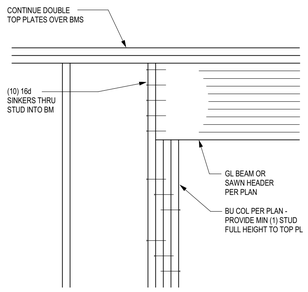

1 **SECTION**
1" = 1'-0" 1 / S6.1-B

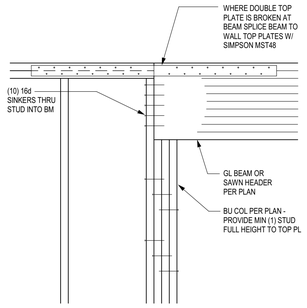

2 **SECTION**
1" = 1'-0" 2 / S6.1-B

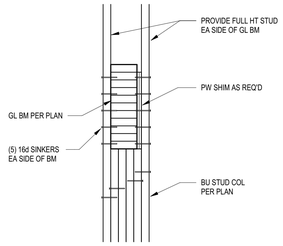

3 **SECTION**
1" = 1'-0" 3 / S6.1-B

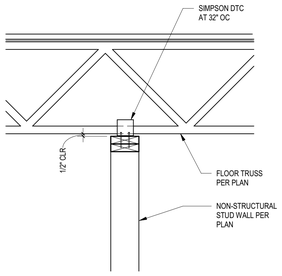

TYPICAL INTERIOR NON-STRUCTURAL WALL CONNECTION

4 **SECTION**
1" = 1'-0" 4 / S6.1-B

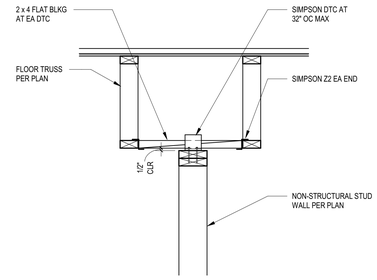

TYPICAL INTERIOR NON-STRUCTURAL WALL CONNECTION

5 **SECTION**
1" = 1'-0" 5 / S6.1-B

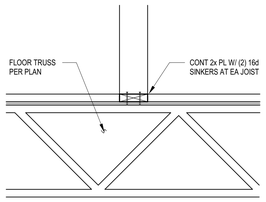

TRUSS PERPENDICULAR TO WALL

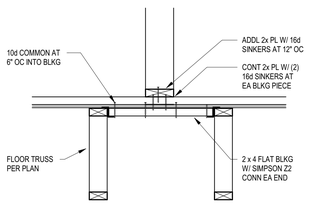

TRUSS PARALLEL TO WALL

INTERIOR NON-STRUCTURAL WALL CONN AT 2ND FLOOR

6 **SECTION**
1" = 1'-0" 6 / S6.1-B

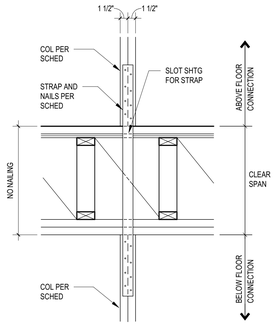

COORDINATE STRAP AND JOIST LAYOUT TO AVOID CONFLICTS

STRAP ATTACHMENT DETAIL

STRAP SCHEDULE			
DESIGNATION	STRAP	CONNECTION ABOVE AND BELOW FLOOR	ALLOWABLE TENSION LOAD
M60	MST60	(17) 16d x 2 1/2" NAILS TO (2) 2x STUDS	4605#
M72	MST72	(24) 16d x 2 1/2" NAILS TO (2) 2x STUDS	6505#

7 **SECTION**
1" = 1'-0" 7 / S6.1-B

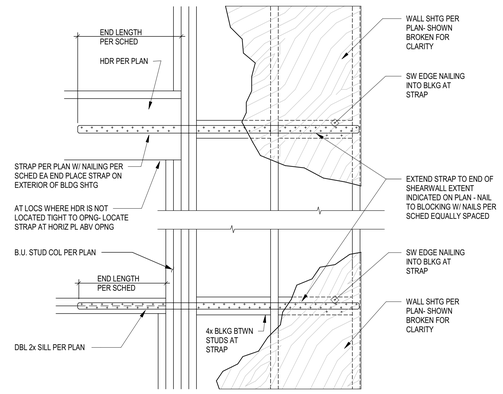

STRAP DESIGNATION	END LENGTH	NAILING
CS16	13"	(11) 10d EA END

NOTE:
NAIL SPACING SHALL BE 2 1/16" OC PER ROW

8 **SECTION**
1" = 1'-0" 8 / S6.1-B

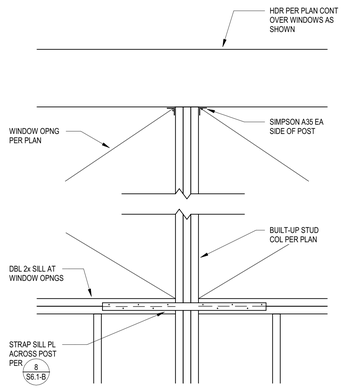

9 **SECTION**
1" = 1'-0" 9 / S6.1-B

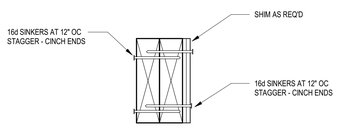

BUILT-UP DBL 2x

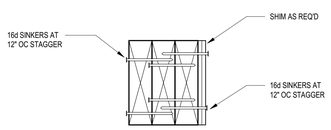

BUILT-UP TRIPLE 2x

10 **SECTION**
3" = 1'-0" 10 / S6.1-B

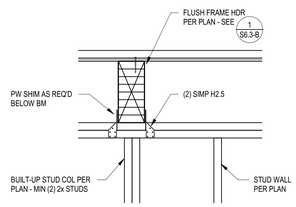

11 **SECTION**
1" = 1'-0" 11 / S6.1-B

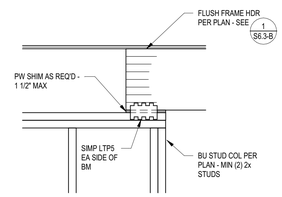

12 **SECTION**
1" = 1'-0" 12 / S6.1-B

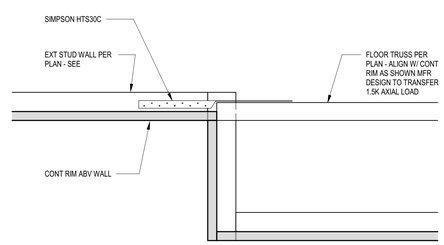

TYPICAL DIAPHRAGM CHORD SPLICE

13 **PLAN**
1" = 1'-0" 13 / S6.1-B

in site architects
1000 university ave. w. suite 130
st. paul, minnesota 55104
612-252-4820

NOTICE:
ALTERATION OF THIS DOCUMENT SHALL INVALIDATE THE PROFESSIONAL ENGINEER'S SEAL AND SIGNATURE. THIS DOCUMENT DOES NOT SERVE AS A TRANSFER OF OWNERSHIP RIGHTS IN IT. THIS DOCUMENT IS FOR USE ON ONLY FOR THE PROJECT IDENTIFIED IN THIS TITLE BLOCK. IT IS NOT TO BE USED FOR REPAIR, REMODEL, OR ADDITION TO THIS PROJECT OR FOR ANY OTHER PROJECT.

WESLEY BRADLEY PARK 2
EAST BROWNSTONE
707 39TH AVENUE SE
PUYALLUP, WA 98374

PERMIT RESUBMITTAL
03/01/2024

ORIGINAL ISSUE: 12/17/15

REVISIONS

No.	Description	Date

2220236.20
PROJECT NUMBER

KJK DRAWN BY
ADM CHECKED BY

WESLEY BRADLEY PARK 2
EAST BROWNSTONE

FLOOR FRAMING DETAILS

S6.1-B

AHBL
TACOMA SEATTLE SPOKANE TRI-CITIES
2215 North 30th Street, Suite 300, Tacoma,WA 98403
253.383.2422 TEL 253.383.2572 FAX www.ahbl.com WEB

3/1/2024 7:23:27 PM

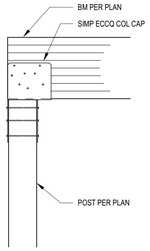

1 **SECTION**
1" = 1'-0" 1 / S6.2-B

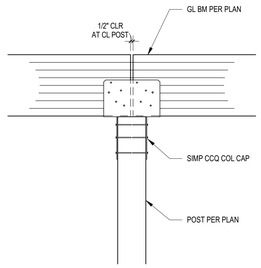

2 **SECTION**
1" = 1'-0" 2 / S6.2-B

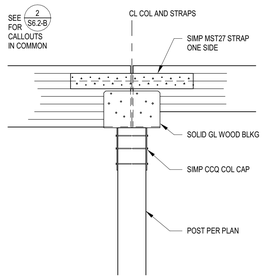

3 **SECTION**
1" = 1'-0" 3 / S6.2-B

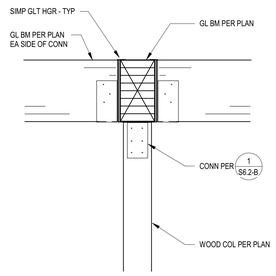

4 **SECTION**
1" = 1'-0" 6 / S6.2-B

in site architects
1000 university ave. w. # suite 130
st. paul, minnesota 55104
612-252-4820

NOTICE:
ALTERATION OF THIS DOCUMENT SHALL INVALIDATE THE PROFESSIONAL ENGINEER'S SEAL AND SIGNATURE. THIS DOCUMENT DOES NOT SURRENDER FROM RESERVED OWNERSHIP RIGHTS IN IT. THIS DOCUMENT IS FOR USE ON LY FOR THE PROJECT IDENTIFIED IN IT. IT SHOULD NOT BE USED FOR ANY OTHER PURPOSE, OR TO ADD OR ALTER THE PROJECT OR FOR ANY OTHER PROJECT.

WESLEY BRADLEY PARK 2
EAST BROWNSTONE

707 39TH AVENUE SE
PUYALLUP, WA 98374

PERMIT
RESUBMITTAL
03/01/2024

ORIGINAL ISSUE: 01/24/18

REVISIONS

No.	Description	Date

2220236.20
PROJECT NUMBER

KJK DRAWN BY
ADM CHECKED BY

WESLEY BRADLEY PARK 2
EAST BROWNSTONE

FLOOR FRAMING DETAILS

S6.2-B

AHBL
TACOMA SEATTLE SPOKANE TRI-CITIES
2215 North 30th Street, Suite 300, Tacoma,WA 98403
253.383.2422 TEL 253.383.2572 FAX www.ahbl.com WEB

3/1/2024 7:23:30 PM

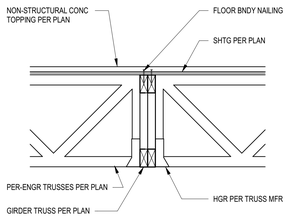

1 SECTION

1" = 1'-0" 1 / S6.3-B

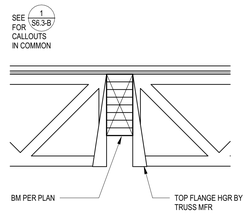

2 SECTION

1" = 1'-0" 2 / S6.3-B

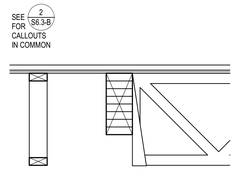

3 SECTION

1" = 1'-0" 3 / S6.3-B

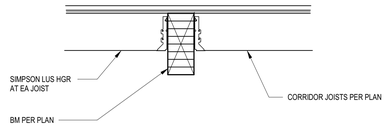

4 SECTION

1" = 1'-0" 4 / S6.3-B

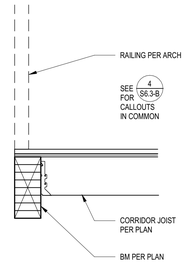

5 SECTION

1" = 1'-0" 5 / S6.3-B

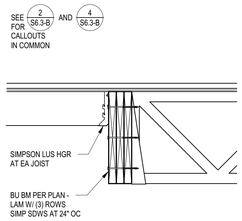

6 SECTION

1" = 1'-0" 6 / S6.3-B

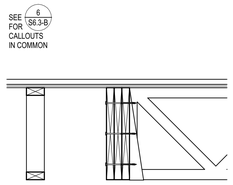

7 SECTION

1" = 1'-0" 7 / S6.3-B

3/1/2024 7:23:33 PM

in site architects
1000 university ave. w. suite 130
st. paul, minnesota 55104
612-252-4820

NOTICE:
ALTERATION OF THIS DOCUMENT SHALL INVALIDATE THE PROFESSIONAL ENGINEER'S SEAL AND SIGNATURE. THIS DOCUMENT DOES NOT DEROGATE FROM RESERVED OWNERSHIP RIGHTS IN IT. THIS DOCUMENT IS FOR USE ONLY FOR THE PROJECT IDENTIFIED IN IT. IT SHOULD NOT BE REUSED OR REPRODUCED FOR REPAIR, REMODEL, OR ADDITION TO THIS PROJECT OR FOR ANY OTHER PROJECT.

WESLEY BRADLEY PARK 2
EAST BROWNSTONE

707 39TH AVENUE SE
PUYALLUP, WA 98374

PERMIT RESUBMITTAL
03/01/2024

ORIGINAL ISSUE: 08/11/17

REVISIONS

No.	Description	Date

2220236.20
PROJECT NUMBER

KJK DRAWN BY
ADM CHECKED BY

WESLEY BRADLEY PARK 2
EAST BROWNSTONE

AHBL
TACOMA SEATTLE SPOKANE TRI-CITIES
2215 North 30th Street, Suite 300, Tacoma,WA 98403
253.383.2422 TEL 253.383.2572 FAX www.ahbl.com WEB

FLOOR FRAMING DETAILS

S6.3-B

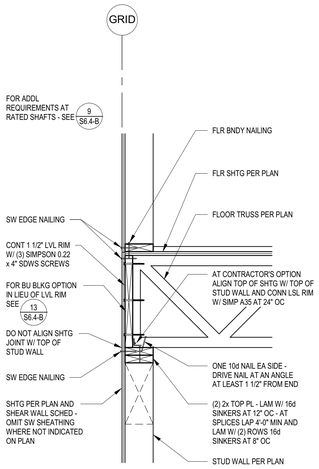

1 **SECTION**
1" = 1'-0" 1 / S6.4-B

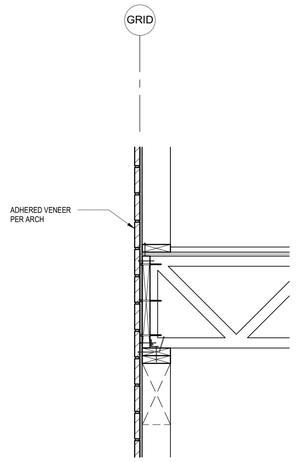

2 **SECTION**
1" = 1'-0" 2 / S6.4-B

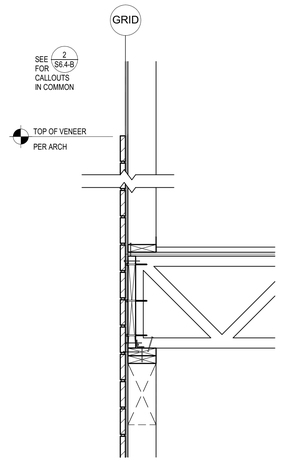

3 **SECTION**
1" = 1'-0" 3 / S6.4-B

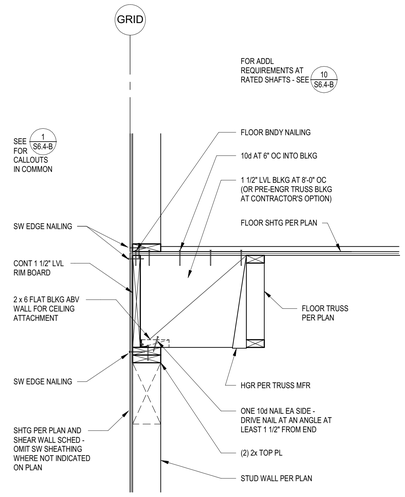

4 **SECTION**
1" = 1'-0" 4 / S6.4-B

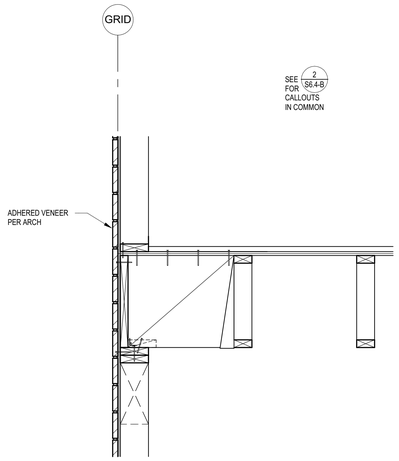

5 **SECTION**
1" = 1'-0" 5 / S6.4-B

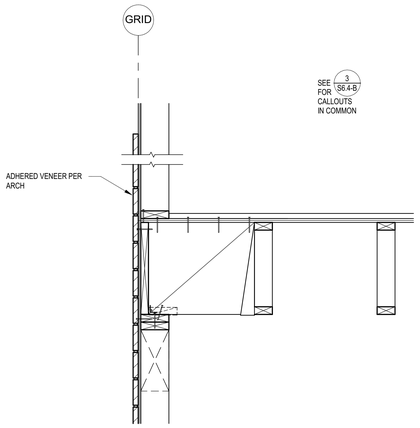

6 **SECTION**
1" = 1'-0" 6 / S6.4-B

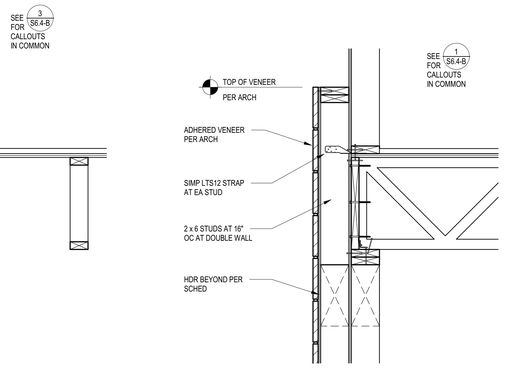

7 **SECTION**
1" = 1'-0" 7 / S6.4-B

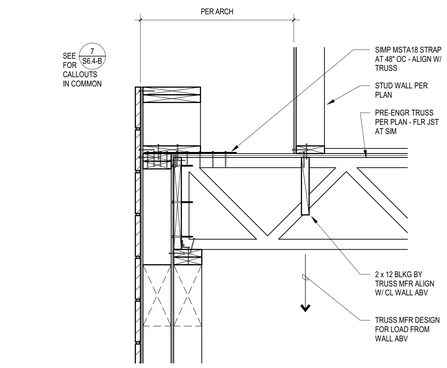

8 **SECTION**
1" = 1'-0" 8 / S6.4-B

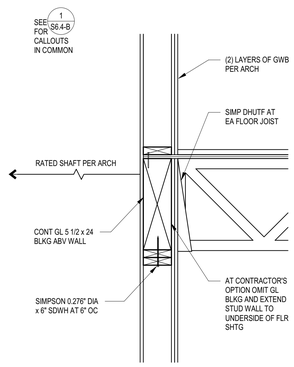

9 **SECTION**
1" = 1'-0" 9 / S6.4-B

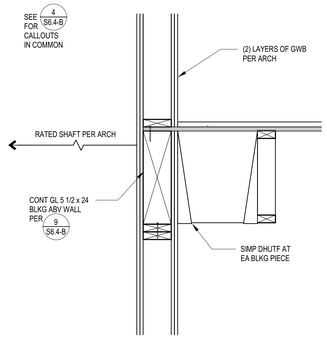

10 **SECTION**
1" = 1'-0" 10 / S6.4-B

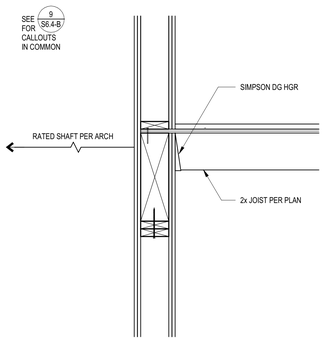

11 **SECTION**
1" = 1'-0" 11 / S6.4-B

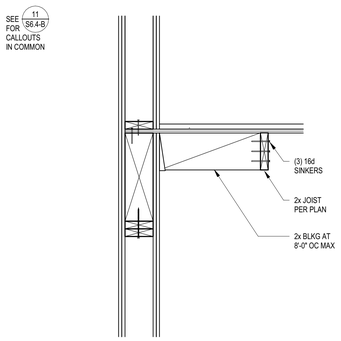

12 **SECTION**
1" = 1'-0" 12 / S6.4-B

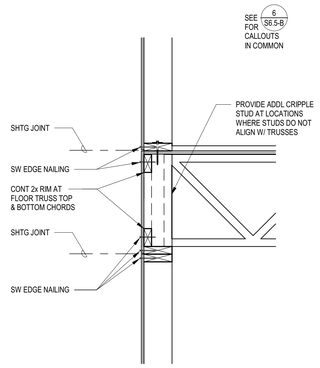

13 **SECTION**
1" = 1'-0" 13 / S6.4-B

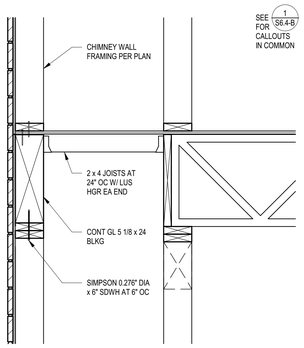

14 **SECTION**
1" = 1'-0" 14 / S6.4-B

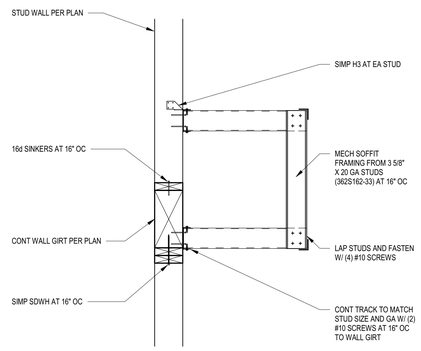

15 **SECTION**
1" = 1'-0" 15 / S6.4-B

in site architects
1000 university ave. w. suite 130
st. paul, minnesota 55104
612-252-4820

NOTICE:
ALTERATION OF THIS DOCUMENT SHALL INVALIDATE THE ARCHITECT'S OPINION AND SEAL ON THIS DOCUMENT. THIS DOCUMENT DOES NOT SURRGATE FROM RESERVED OWNERSHIP RIGHTS IN IT. THIS DOCUMENT IS FOR USE ONLY FOR THE PROJECT STATED IN IT. IN ADDITION TO THE ABOVE, DO NOT TOUCH USED FOR REPAIR, REMODEL, OR ADDITION TO THIS PROJECT OR FOR ANY OTHER PROJECT.

WESLEY BRADLEY PARK 2
EAST BROWNSTONE
707 39TH AVENUE SE
PUYALLUP, WA 98374

PERMIT RESUBMITTAL
03/01/2024

ORIGINAL ISSUE: 08/11/17

REVISIONS

No.	Description	Date

2220236.20
PROJECT NUMBER

KJK — DRAWN BY
ADM — CHECKED BY

WESLEY BRADLEY PARK 2
EAST BROWNSTONE

AHBL
TACOMA SEATTLE SPOKANE TRI-CITIES
2215 North 30th Street, Suite 300, Tacoma,WA 98403
253.383.2422 TEL 253.383.2572 FAX www.ahbl.com WEB

FLOOR FRAMING DETAILS

S6.4–B

3/1/2024 7:23:37 PM

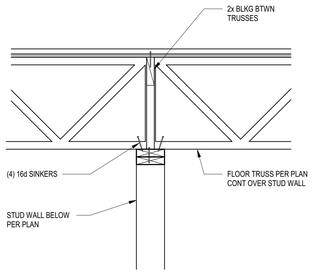

1 SECTION
1" = 1'-0" 1 / S6.5-B

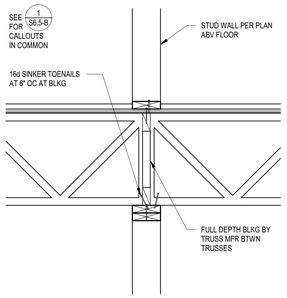

2 SECTION
1" = 1'-0" 2 / S6.5-B

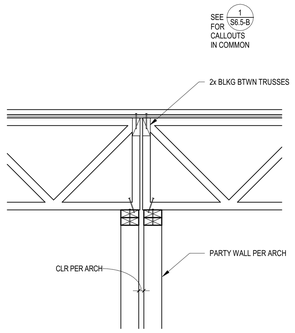

3 SECTION
1" = 1'-0" 3 / S6.5-B

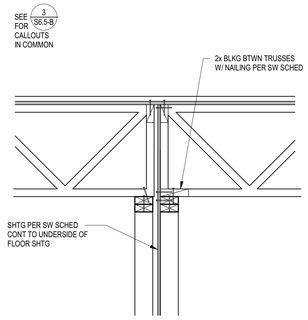

4 SECTION
1" = 1'-0" 4 / S6.5-B

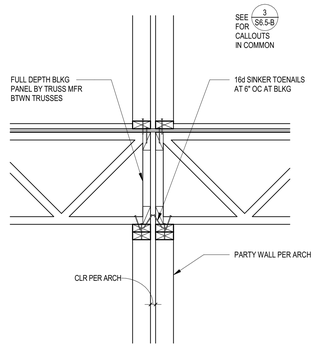

5 SECTION
1" = 1'-0" 5 / S6.5-B

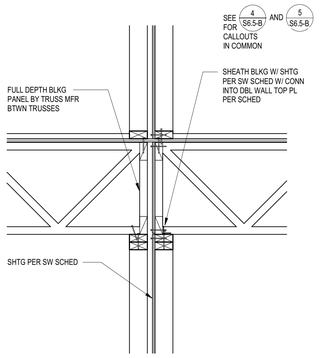

6 SECTION
1" = 1'-0" 6 / S6.5-B

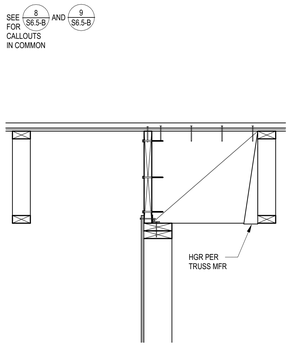

7 SECTION
1" = 1'-0" 7 / S6.5-B

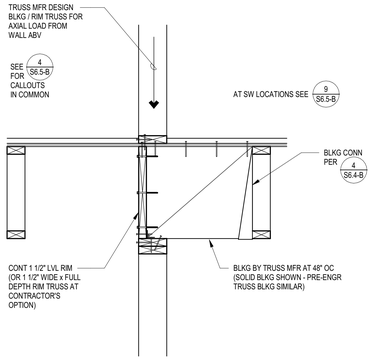

8 SECTION
1" = 1'-0" 8 / S6.5-B

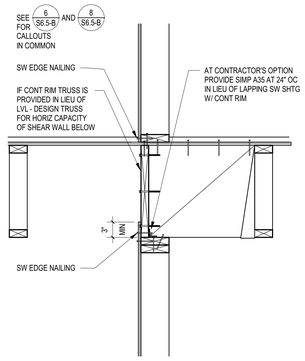

9 SECTION
1" = 1'-0" 9 / S6.5-B

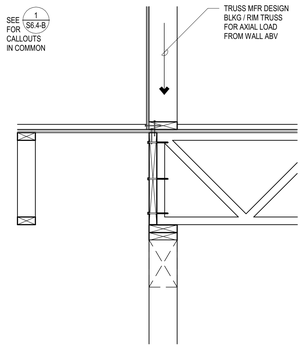

10 SECTION
1" = 1'-0" 10 / S6.5-B

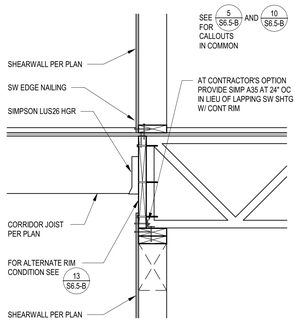

11 SECTION
1" = 1'-0" 11 / S6.5-B

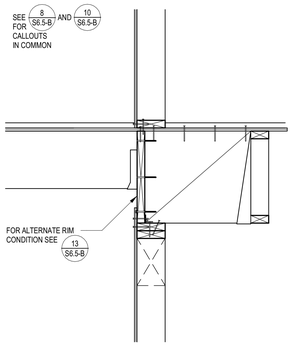

12 SECTION
1" = 1'-0" 12 / S6.5-B

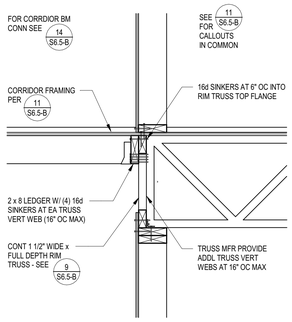

13 SECTION
1" = 1'-0" 13 / S6.5-B

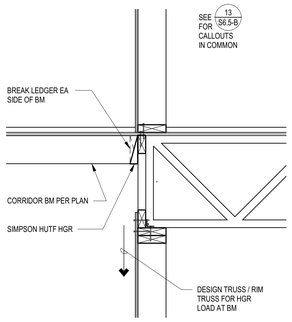

14 SECTION
1" = 1'-0" 14 / S6.5-B

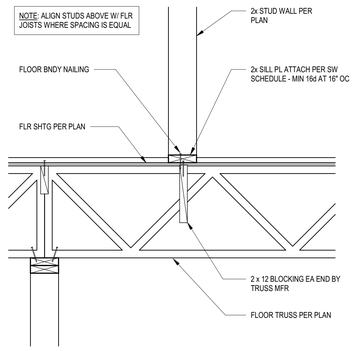

15 SECTION
1" = 1'-0" 15 / S6.5-B

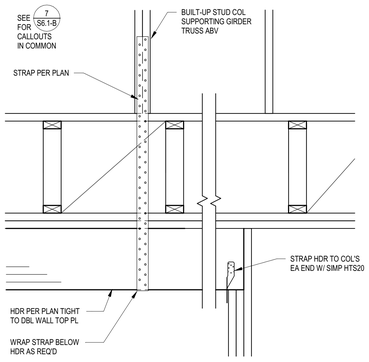

16 SECTION
1" = 1'-0" 16 / S6.5-B

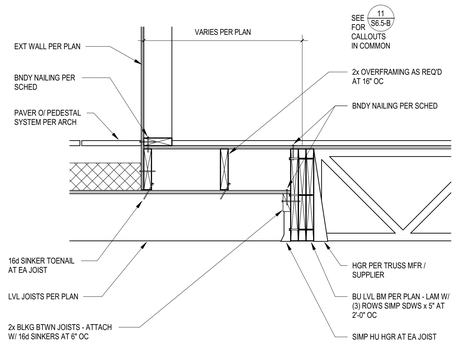

17 SECTION
1" = 1'-0" 17 / S6.5-B

3/1/2024 7:23:42 PM

in site architects
1000 university ave. w. suite 130
st. paul, minnesota 55104
612-252-4820

NOTICE:
ALTERATION OF THIS DOCUMENT SHALL INVALIDATE THE PROFESSIONAL ENGINEER'S SEAL AND SIGNATURE. THIS DOCUMENT DOES NOT DERIVE FROM RESERVED OWNERSHIP RIGHTS W.I.T. THIS DOCUMENT IS FOR USE ON ONLY FOR THE PROJECT DESCRIBED IN IT. IT SHOULD NOT BE REUSED OR REPRODUCED FOR REPAIR, REMODEL, OR ADDITION TO THIS PROJECT OR FOR ANY OTHER PROJECT.

WESLEY BRADLEY PARK 2
EAST BROWNSTONE
707 39TH AVENUE SE
PUYALLUP, WA 98374

PERMIT RESUBMITTAL
03/01/2024

ORIGINAL ISSUE: 08/11/17

REVISIONS

No.	Description	Date

2220236.20
PROJECT NUMBER

KJK DRAWN BY
ADM CHECKED BY

WESLEY BRADLEY PARK 2
EAST BROWNSTONE

AHBL
TACOMA SEATTLE SPOKANE TRI-CITIES
2215 North 30th Street, Suite 300, Tacoma,WA 98403
253.383.2422 TEL 253.383.2572 FAX www.ahbl.com WEB

FLOOR FRAMING DETAILS
S6.5-B

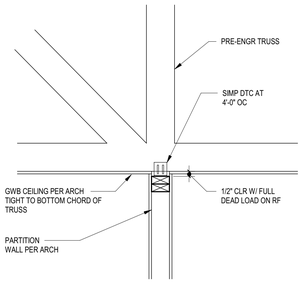

1 SECTION
1" = 1'-0" 1 / S7.1-B

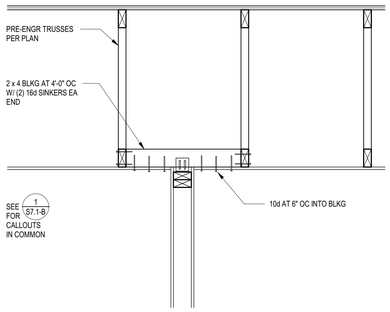

2 SECTION
1" = 1'-0" 2 / S7.1-B

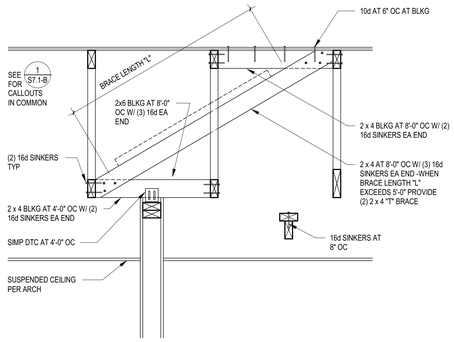

3 SECTION
1" = 1'-0" 3 / S7.1-B

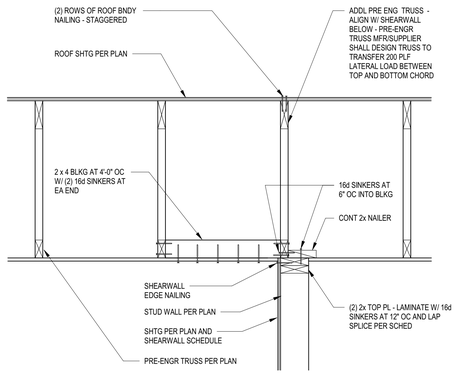

4 SECTION
1" = 1'-0" 4 / S7.1-B

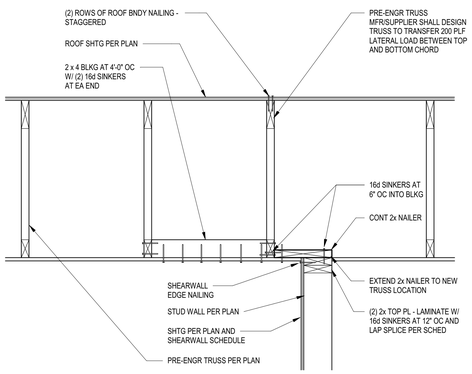

5 SECTION
1" = 1'-0" 5 / S7.1-B

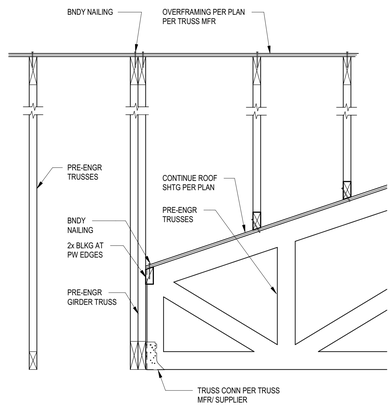

6 SECTION
1" = 1'-0" 6 / S7.1-B

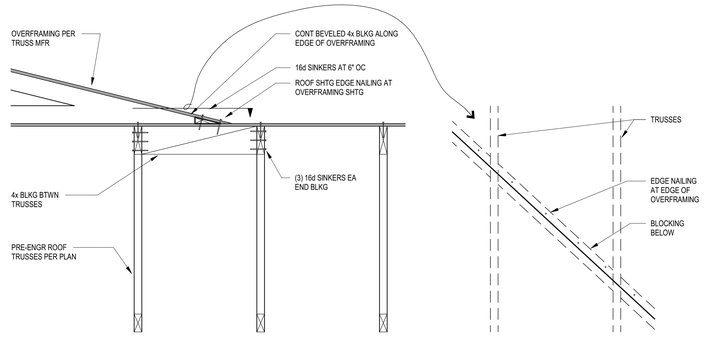

7 SECTION
1" = 1'-0" 7 / S7.1-B

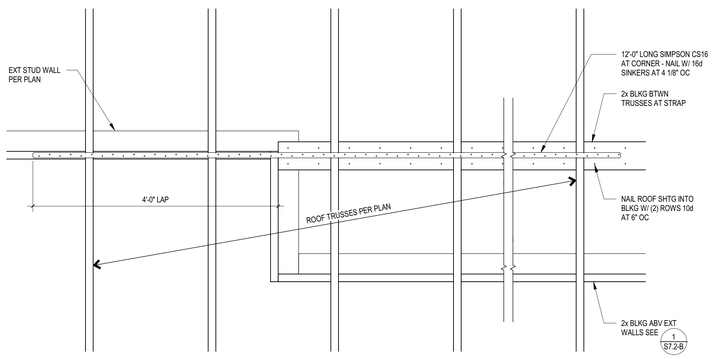

ROOF CHORD SPLICES

8 PLAN
1" = 1'-0" 8 / S7.1-B

3 / 1 / 2024 7:23:45 PM

in site architects
1000 university ave. w. suite 130
st. paul, minnesota 55104
612-252-4820

NOTICE:
ALTERATION OF THIS DOCUMENT SHALL INVALIDATE THE ARCHITECT'S SEAL AND SIGNATURE. THE ARCHITECT'S THIS DOCUMENT DOES NOT DERIVE FROM RESERVED OWNERSHIP RIGHTS IN IT. THIS DOCUMENT IS FOR USE ONLY FOR THE PROJECT IDENTIFIED IN IT. IT SHOULD NOT BE USED FOR ANY OTHER PURPOSE, REMODEL, OR ADDITION TO THIS PROJECT OR FOR ANY OTHER PROJECT.

WESLEY BRADLEY PARK 2
EAST BROWNSTONE
707 39TH AVENUE SE
PUYALLUP, WA 98374

PERMIT RESUBMITTAL
03/01/2024

ORIGINAL ISSUE: 08/11/17

REVISIONS

No.	Description	Date

2220236.20
PROJECT NUMBER

KJK DRAWN BY
ADM CHECKED BY

WESLEY BRADLEY PARK 2
EAST BROWNSTONE

ROOF FRAMING DETAILS

S7.1-B

AHBL
TACOMA SEATTLE SPOKANE TRI-CITIES
2215 North 30th Street, Suite 300, Tacoma,WA 98403
253.383.2422 TEL 253.383.2572 FAX www.ahbl.com WEB

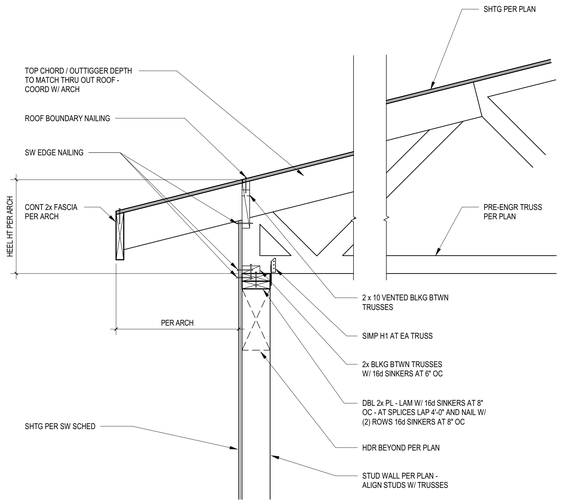

1 SECTION

1" = 1'-0" 1 / S7.2-B

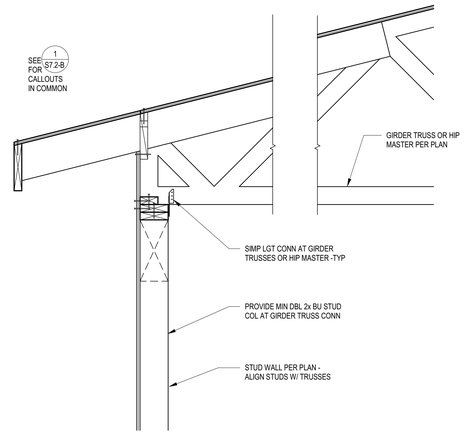

2 SECTION

1" = 1'-0" 2 / S7.2-B

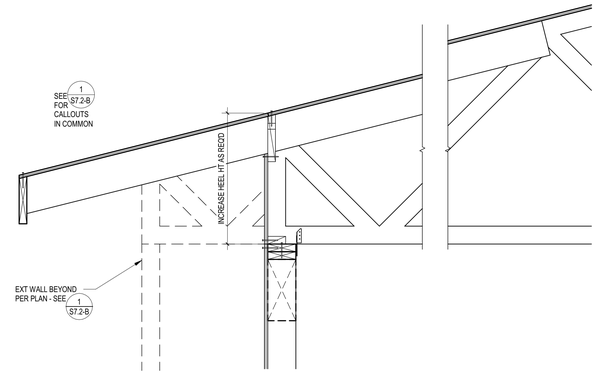

3 SECTION

1" = 1'-0" 3 / S7.2-B

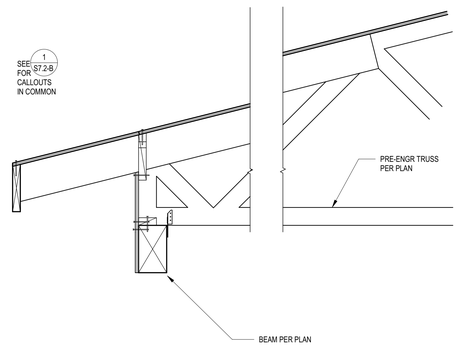

4 SECTION

1" = 1'-0" 4 / S7.2-B

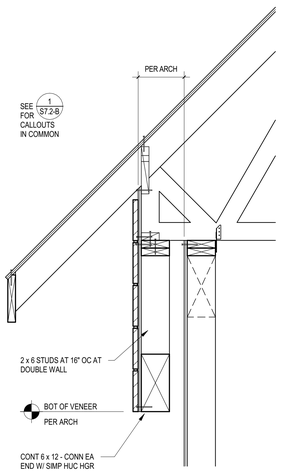

5 SECTION

1" = 1'-0" 5 / S7.2-B

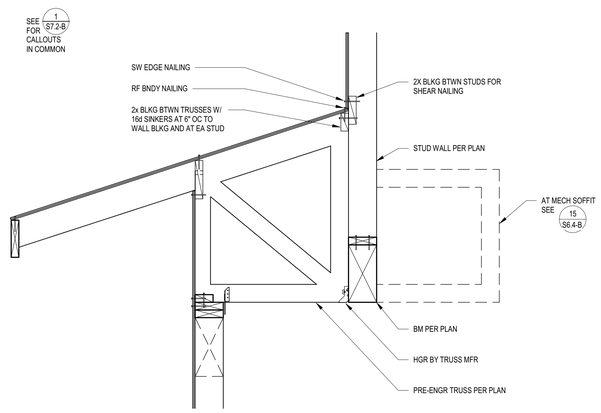

6 SECTION

1" = 1'-0" 6 / S7.2-B

in site architects
1000 university ave. w. suite 130
st. paul, minnesota 55104
612-252-4820

NOTICE:
ALTERATION OF THIS DOCUMENT SHALL INVALIDATE THE PROFESSIONAL ENGINEER'S SEAL AND SIGNATURE. THIS DOCUMENT DOES NOT SURRENDER FROM RESERVED OWNERSHIP RIGHTS IN IT. THIS DOCUMENT IS FOR USE ON ONLY FOR THE PROJECT IDENTIFIED IN IT. THE DOCUMENT MAY NOT BE USED FOR REPAIR, REMODEL, OR ADDITION TO THIS PROJECT OR FOR ANY OTHER PROJECT.

WESLEY BRADLEY PARK 2
EAST BROWNSTONE
707 39TH AVENUE SE
PUYALLUP, WA 98374

PERMIT RESUBMITTAL
03/01/2024

ORIGINAL ISSUE: 03/11/19

REVISIONS

No.	Description	Date

2220236.20
PROJECT NUMBER

KJK DRAWN BY
ADM CHECKED BY

WESLEY BRADLEY PARK 2
EAST BROWNSTONE

AHBL
TACOMA SEATTLE SPOKANE TRI-CITIES
2215 North 30th Street, Suite 300, Tacoma,WA 98403
253.383.2422 TEL 253.383.2572 FAX www.ahbl.com WEB

ROOF FRAMING DETAILS
S7.2-B

3/1/2024 7:23:48 PM

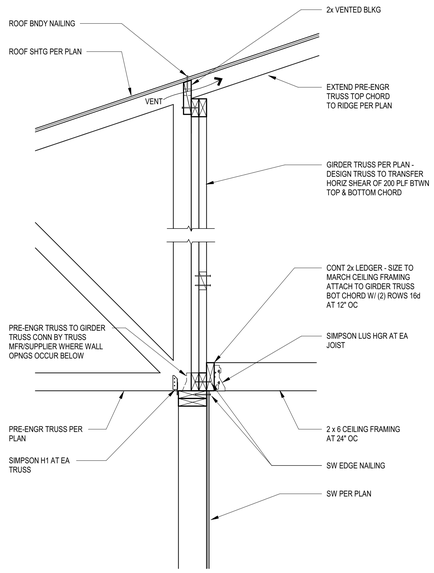

1 **SECTION**
1" = 1'-0" 1 / S7.3-B

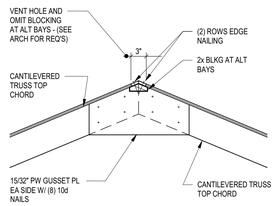

2 **SECTION**
1" = 1'-0" 2 / S7.3-B

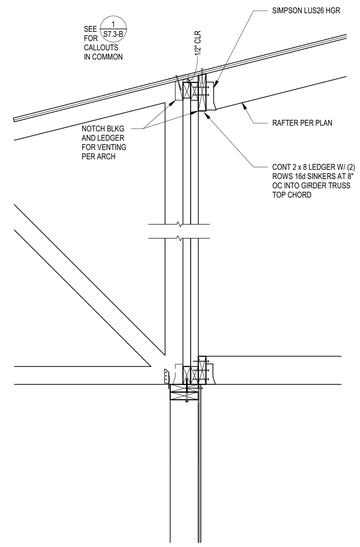

3 **SECTION**
1" = 1'-0" 3 / S7.3-B

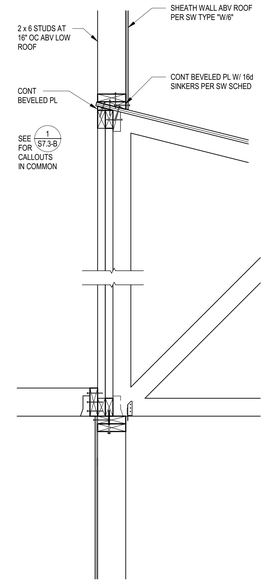

4 **SECTION**
1" = 1'-0" 4 / S7.3-B

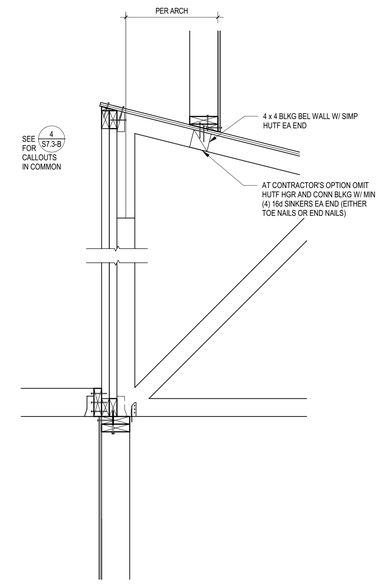

5 **SECTION**
1" = 1'-0" 5 / S7.3-B

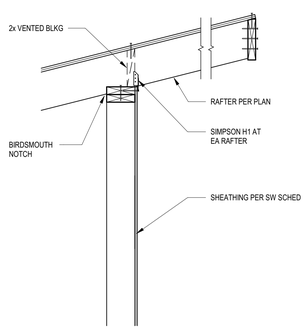

6 **SECTION**
1" = 1'-0" 6 / S7.3-B

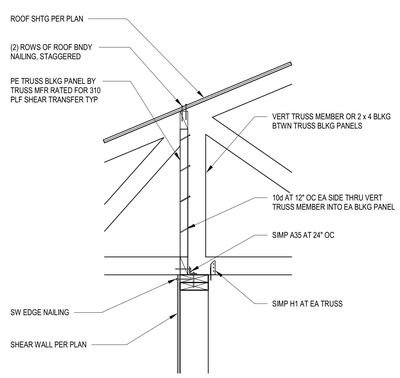

7 **SECTION**
1" = 1'-0" 7 / S7.3-B

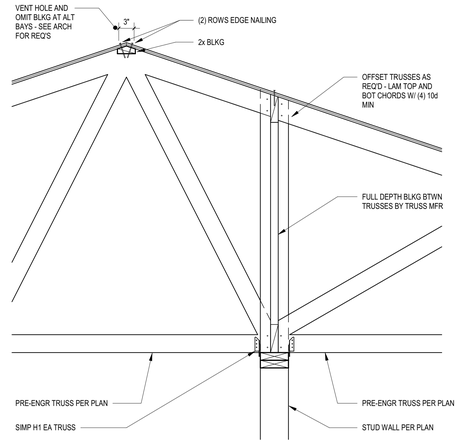

8 **SECTION**
1" = 1'-0" 8 / S7.3-B

in site architects
1000 university ave. w. suite 130
st. paul, minnesota 55104
612-252-4820

NOTICE:
ALTERATION OF THIS DOCUMENT SHALL INVALIDATE THE PROFESSIONAL ENGINEER'S SEAL AND SIGNATURE. THIS DOCUMENT DOES NOT DEROGATE FROM RESERVED OWNERSHIP RIGHTS IN IT. THIS DOCUMENT IS FOR USE ON LY FOR THE PROJECT DESCRIBED IN IT. IT IS NOT TO BE USED FOR ANY OTHER PURPOSE OR ADDITION TO OR FOR THE PROJECT OR FOR ANY OTHER PROJECT.

WESLEY BRADLEY PARK 2
EAST BROWNSTONE
707 39TH AVENUE SE
PUYALLUP, WA 98374

PERMIT RESUBMITTAL
03/01/2024

ORIGINAL ISSUE: 03/11/19

REVISIONS

No.	Description	Date

2220236.20
PROJECT NUMBER

KJK DRAWN BY
ADM CHECKED BY

WESLEY BRADLEY PARK 2
EAST BROWNSTONE

ROOF FRAMING DETAILS

S7.3-B

AHBL
TACOMA SEATTLE SPOKANE TRI-CITIES
2215 North 30th Street, Suite 300, Tacoma,WA 98403
253.383.2422 TEL 253.383.2572 FAX www.ahbl.com WEB

3/1/2024 7:23:51 PM

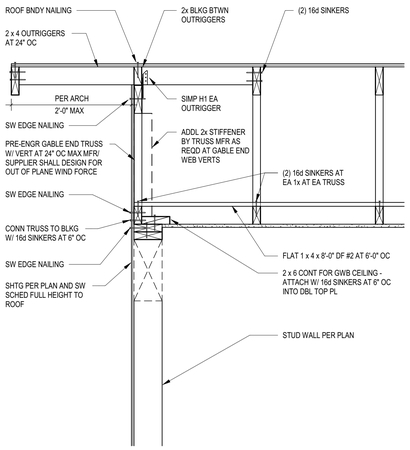

1 **SECTION**
1" = 1'-0" 1 / S7.4-B

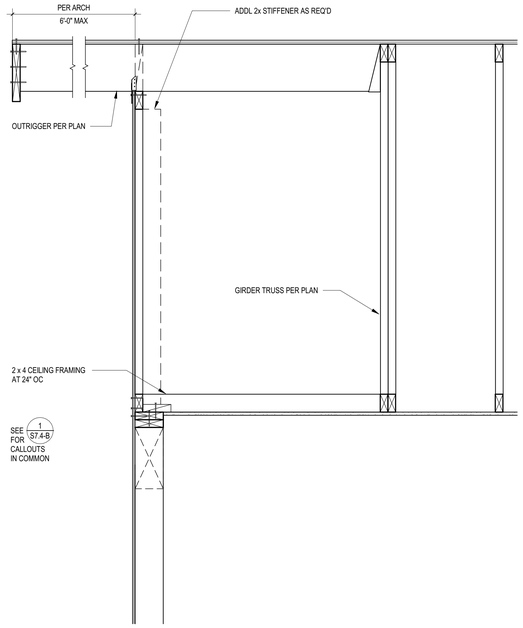

2 **SECTION**
1" = 1'-0" 2 / S7.4-B

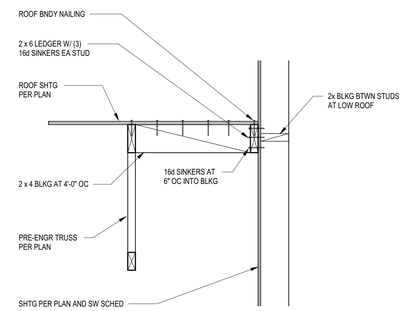

3 **SECTION**
1" = 1'-0" 3 / S7.4-B

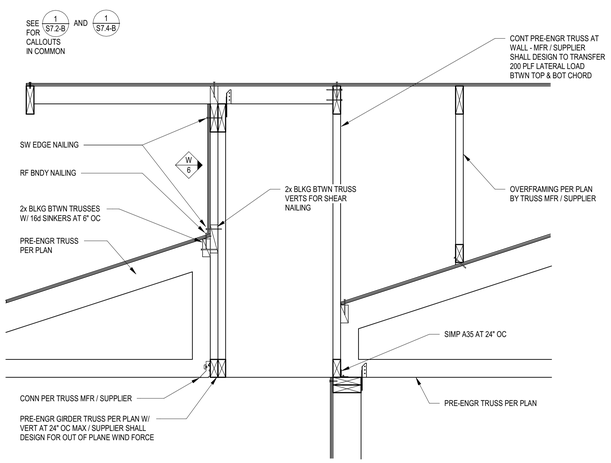

4 **SECTION**
1" = 1'-0" 4 / S7.4-B

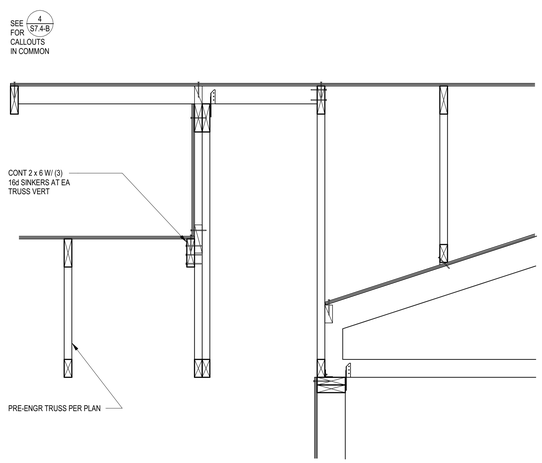

5 **SECTION**
1" = 1'-0" 5 / S7.4-B

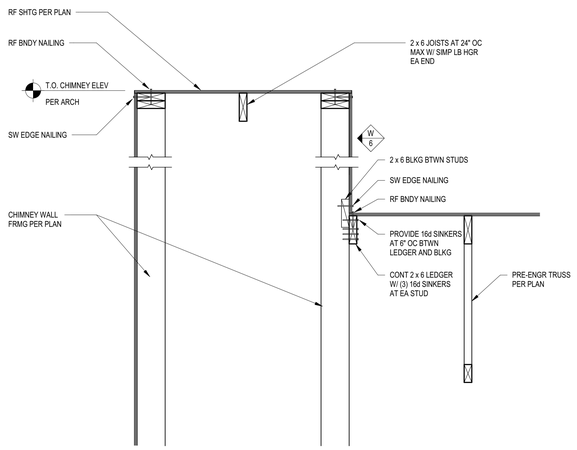

6 **SECTION**
1" = 1'-0" 6 / S7.4-B

in site architects
1000 university ave. w. suite 130
st. paul, minnesota 55104
612-252-4820

NOTICE:
ALTERATION OF THIS DOCUMENT SHALL INVALIDATE THE ARCHITECT'S OPINION AND SEAL. THE ARCHITECT'S OPINION AND SEAL THIS DOCUMENT DOES NOT DERIVE FROM RESERVED OWNERSHIP RIGHTS IN IT. THIS DOCUMENT IS FOR USE ONLY FOR THE PROJECT IDENTIFIED IN IT. THIS DOCUMENT IS NOT TO BE USED FOR REPAIR, REMODEL, OR ADDITION TO THIS PROJECT OR FOR ANY OTHER PROJECT.

WESLEY BRADLEY PARK 2
EAST BROWNSTONE
707 39TH AVENUE SE
PUYALLUP, WA 98374

PERMIT RESUBMITTAL
03/01/2024

ORIGINAL ISSUE: 03/11/19

REVISIONS

No.	Description	Date

2220236.20
PROJECT NUMBER

KJK DRAWN BY
ADM CHECKED BY

WESLEY BRADLEY PARK 2
EAST BROWNSTONE

ROOF FRAMING DETAILS

S7.4-B

AHBL
TACOMA SEATTLE SPOKANE TRI-CITIES
2215 North 30th Street, Suite 300, Tacoma,WA 98403
253.383.2422 TEL 253.383.2572 FAX www.ahbl.com WEB

3/1/2024 7:23:55 PM

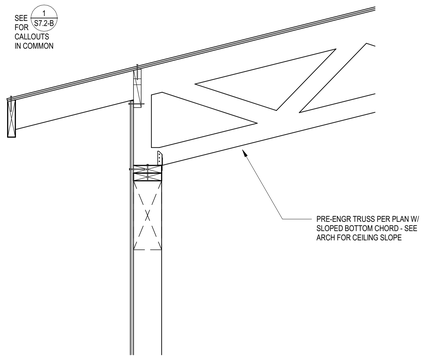

1 **SECTION**
1" = 1'-0" 1 / S7.5-B

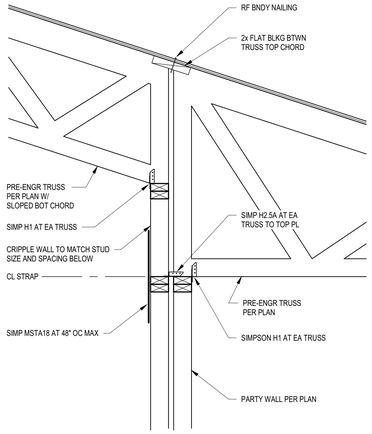

2 **SECTION**
1" = 1'-0" 2 / S7.5-B

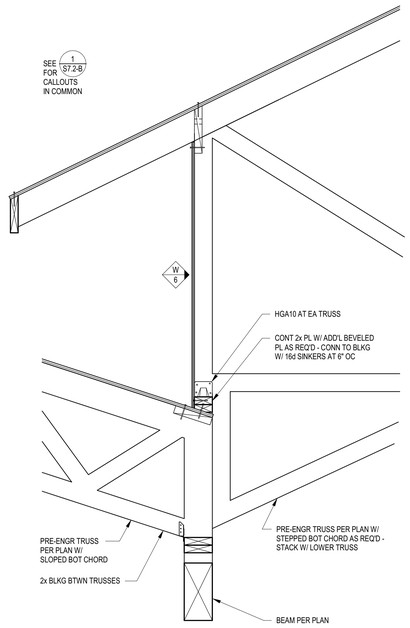

3 **SECTION**
1" = 1'-0" 3 / S7.5-B

in site architects
1000 university ave. w. # suite 130
st. paul, minnesota 55104
612-252-4820

NOTICE:
ALTERATION OF THIS DOCUMENT SHALL INVALIDATE THE PROFESSIONAL ENGINEER'S SEAL AND SIGNATURE. THIS DOCUMENT DOES NOT SURRENDER FROM RESERVED OWNERSHIP RIGHTS IN IT. THIS DOCUMENT IS FOR USE ONLY FOR THE PROJECT IDENTIFIED IN IT. IT SHOULD NOT BE USED FOR ANY OTHER PURPOSE, REMODEL, OR ADDITION TO THIS PROJECT OR FOR ANY OTHER PROJECT.

WESLEY BRADLEY PARK 2
EAST BROWNSTONE
707 39TH AVENUE SE
PUYALLUP, WA 98374

PERMIT
RESUBMITTAL
03/01/2024

ORIGINAL ISSUE: 03/11/19

REVISIONS

No.	Description	Date

2220236.20
PROJECT NUMBER

KJK DRAWN BY
ADM CHECKED BY

WESLEY BRADLEY PARK 2
EAST BROWNSTONE

AHBL
TACOMA SEATTLE SPOKANE TRI-CITIES
2215 North 30th Street, Suite 300, Tacoma,WA 98403
253.383.2422 TEL 253.383.2572 FAX www.ahbl.com WEB

ROOF FRAMING DETAILS
S7.5-B

3/1/2024 7:23:58 PM

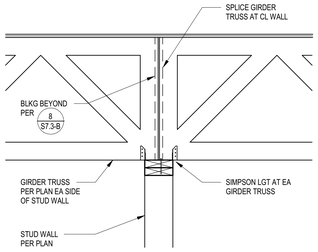

1 **SECTION**

1" = 1'-0" 1 / S7.6-B

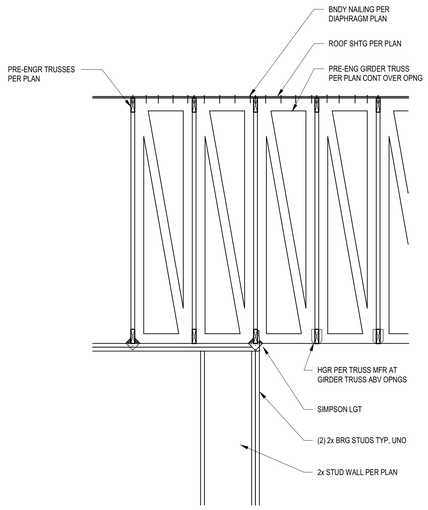

2 **SECTION**

1/2" = 1'-0" 2 / S7.6-B

in site architects
1000 university ave. w. suite 130
st. paul, minnesota 55104
612-252-4820

NOTICE:
ALTERATION OF THIS DOCUMENT SHALL INVALIDATE THE PROFESSIONAL ENGINEER'S SEAL AND SIGNATURE. THIS DOCUMENT DOES NOT SURRGATE FROM RESERVED OWNERSHIP RIGHTS W.I.T. THIS DOCUMENT IS FOR USE ON LY FOR THE PROJECT IDENTIFIED IN IT. IT IS NOT TO BE USED FOR ANY OTHER PURPOSE, REPAIR, REMODEL, OR ADDITION TO THIS PROJECT OR FOR ANY OTHER PROJECT.

WESLEY BRADLEY PARK 2
EAST BROWNSTONE

707 39TH AVENUE SE
PUYALLUP, WA 98374

PERMIT
RESUBMITTAL
03/01/2024

ORIGINAL ISSUE: 03/11/19

REVISIONS

No.	Description	Date

2220236.20
PROJECT NUMBER

KJK DRAWN BY
ADM CHECKED BY

WESLEY BRADLEY PARK 2
EAST BROWNSTONE

ROOF FRAMING DETAILS

S7.6-B

AHBL
TACOMA SEATTLE SPOKANE TRI-CITIES
2215 North 30th Street, Suite 300, Tacoma,WA 98403
253.383.2422 TEL 253.383.2572 FAX www.ahbl.com WEB

3/11/2024 7:24:00 PM

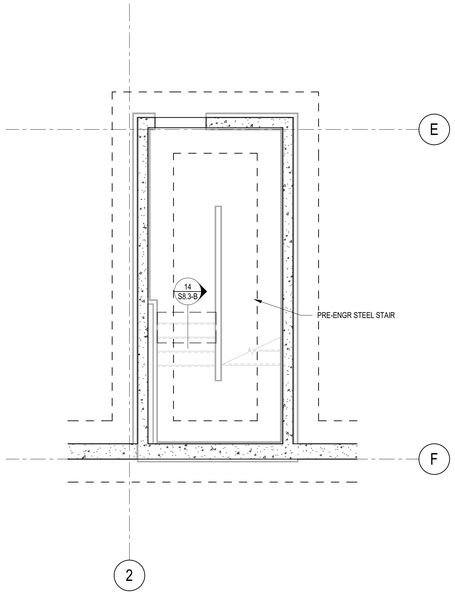

1 STAIR A L0 PLAN

1/4" = 1'-0"

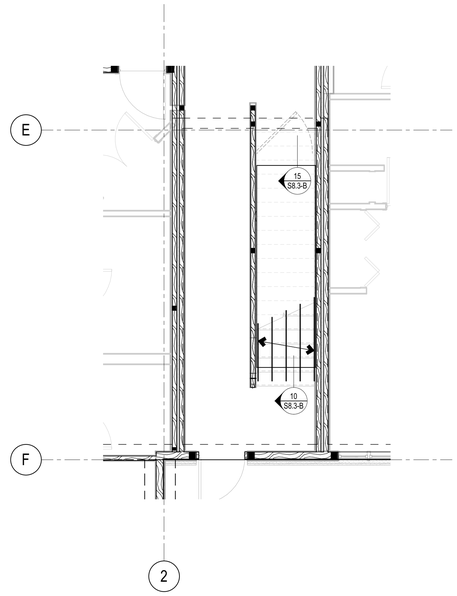

2 STAIR A L1 PLAN

1/4" = 1'-0"

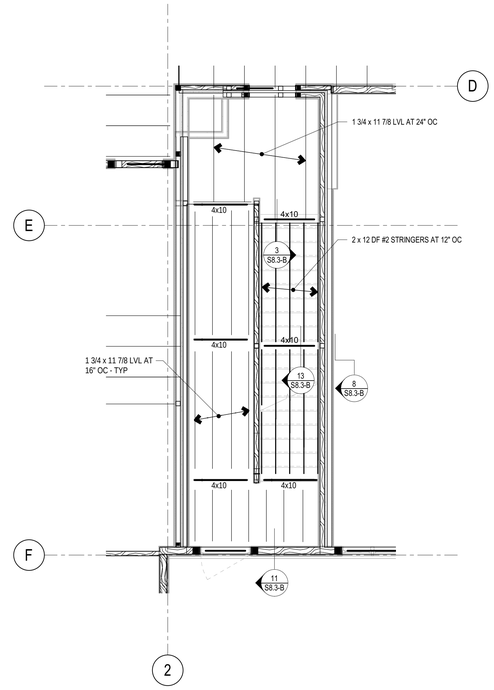

3 STAIR A L2 PLAN

1/4" = 1'-0"

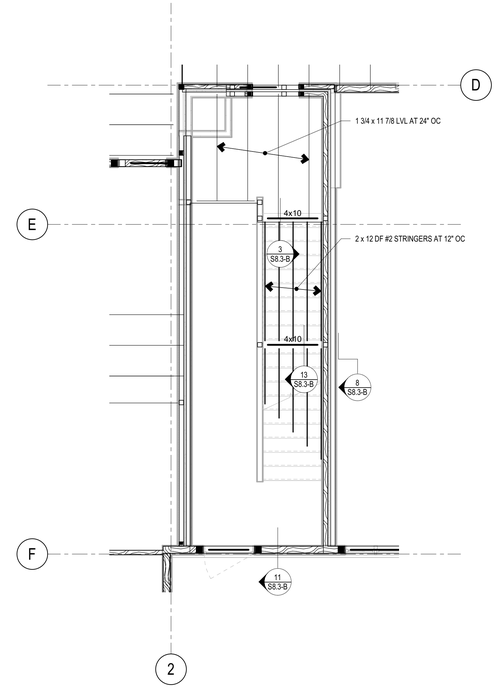

4 STAIR A L3 PLAN

1/4" = 1'-0"

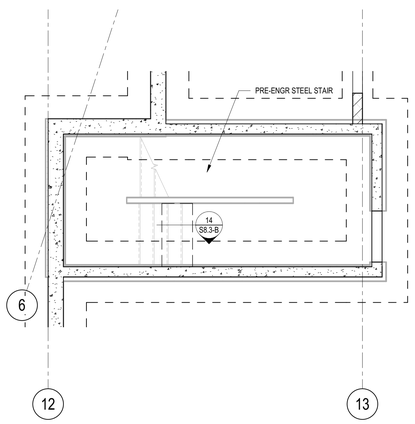

5 STAIR B L0 PLAN

1/4" = 1'-0"

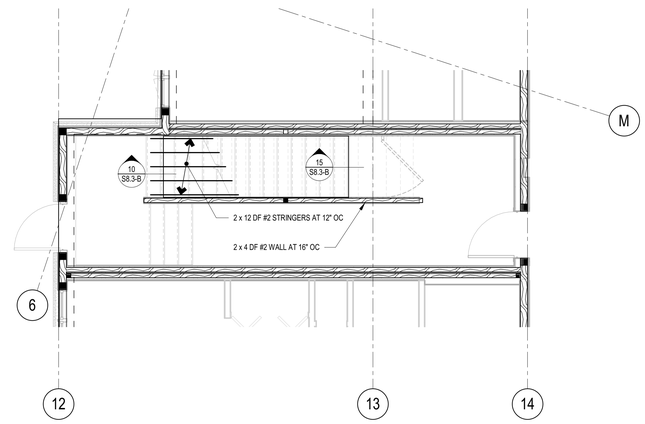

6 STAIR B L1 PLAN

1/4" = 1'-0"

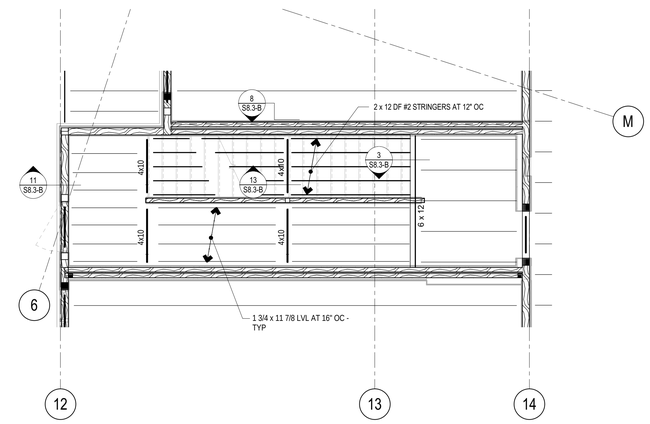

7 STAIR B L2 PLAN

1/4" = 1'-0"

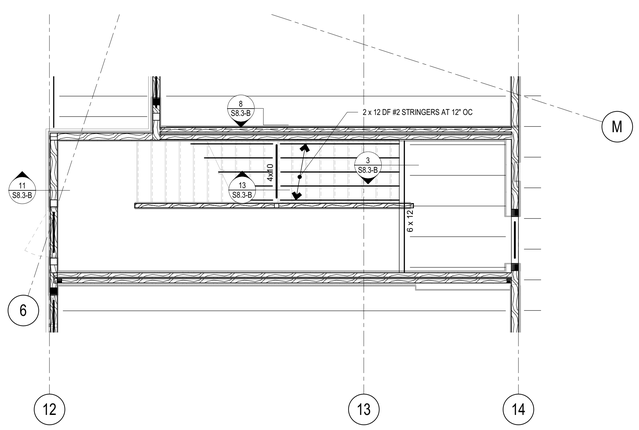

8 STAIR B L3 PLAN

1/4" = 1'-0"

in site architects
1000 university ave. w. suite 130
st. paul, minnesota 55104
612-252-4820

NOTICE:
ALTERATION OF THIS DOCUMENT SHALL INVALIDATE THE PROFESSIONAL ENGINEER'S SEAL AND SIGNATURE. THIS DOCUMENT DOES NOT DERIVE FROM RESERVED OWNERSHIP RIGHTS W.I.T. THIS DOCUMENT IS FOR USE ONLY FOR THE PROJECT IDENTIFIED IN THE TITLE BLOCK AND NOT TO BE USED FOR REPAIR, REMODEL, OR ADDITION TO THIS PROJECT OR FOR ANY OTHER PROJECT.

WESLEY BRADLEY PARK 2
EAST BROWNSTONE

707 39TH AVENUE SE
PUYALLUP, WA 98374

PERMIT
RESUBMITTAL
03/01/2024

ORIGINAL ISSUE: 3/22/2022

REVISIONS

No.	Description	Date

2220236.20
PROJECT NUMBER

KJK DRAWN BY
ADM CHECKED BY

WESLEY BRADLEY PARK 2
EAST BROWNSTONE

AHBL
TACOMA SEATTLE SPOKANE TRI-CITIES
2215 North 30th Street, Suite 300, Tacoma,WA 98403
253.383.2422 TEL 253.383.2572 FAX www.ahbl.com WEB

STAIR PLAN

S8.1-B

3/1/2024 7:24:07 PM

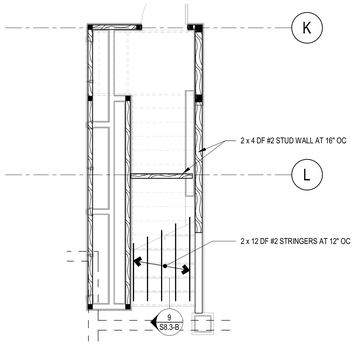

1 **LOBBY STAIR L1 PLAN**
1/4" = 1'-0"

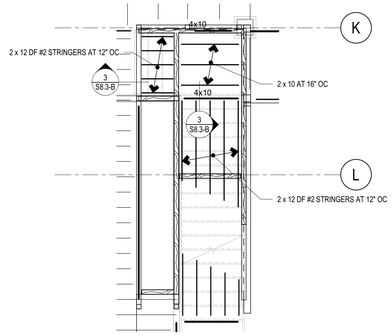

2 **LOBBY STAIR L2 PLAN**
1/4" = 1'-0"

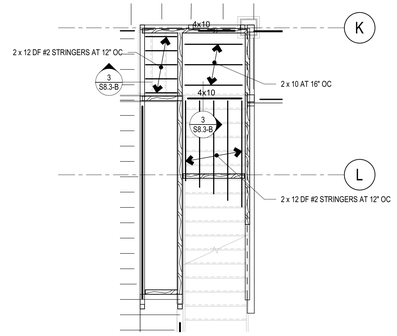

3 **LOBBY STAIR L3 PLAN**
1/4" = 1'-0"

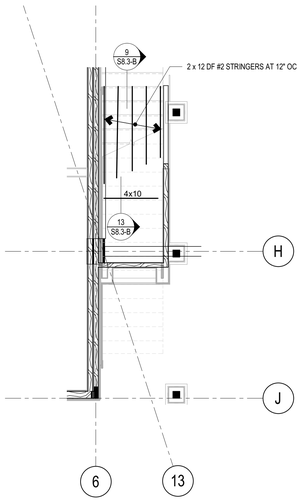

4 **SOUTH STAIR L1 PLAN**
1/4" = 1'-0"

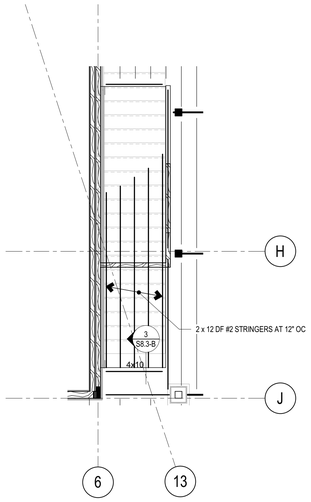

5 **SOUTH STAIR L2 PLAN**
1/4" = 1'-0"

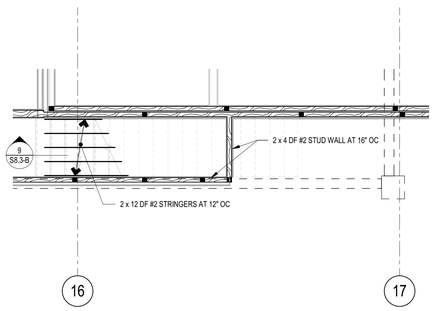

6 **GAME ROOM STAIR L1 PLAN**
1/4" = 1'-0"

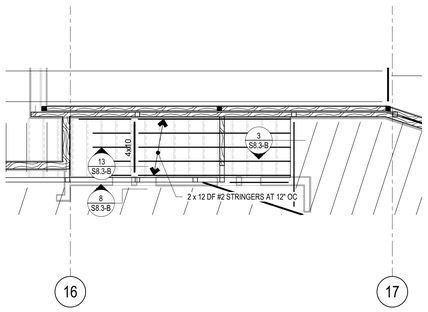

7 **GAME ROOM STAIR L2 PLAN**
1/4" = 1'-0"

3/1/2024 7:24:13 PM

in site architects
1000 university ave. w. suite 130
st. paul, minnesota 55104
612-252-4820

NOTICE:
ALTERATION OF THIS DOCUMENT SHALL INVALIDATE THE PROFESSIONAL ENGINEER'S SEAL AND SIGNATURE. THIS DOCUMENT DOES NOT DERIVE FROM RESERVED OWNERSHIP RIGHTS IN IT. THIS DOCUMENT IS FOR USE ONLY FOR THE PROJECT IDENTIFIED IN IT. THIS DOCUMENT MAY NOT BE USED FOR REPAIR, REMODEL, OR ADDITION TO THIS PROJECT OR FOR ANY OTHER PROJECT.

WESLEY BRADLEY PARK 2
EAST BROWNSTONE
707 39TH AVENUE SE
PUYALLUP, WA 98374

PERMIT
RESUBMITTAL
03/01/2024

ORIGINAL ISSUE: 3/22/2022

REVISIONS

No.	Description	Date

2220236.20
PROJECT NUMBER

KJK DRAWN BY
ADM CHECKED BY

WESLEY BRADLEY PARK 2
EAST BROWNSTONE

AHBL
TACOMA SEATTLE SPOKANE TRI-CITIES
2215 North 30th Street, Suite 300, Tacoma,WA 98403
253.383.2422 TEL 253.383.2572 FAX www.ahbl.com WEB

STAIR PLAN
S8.2-B

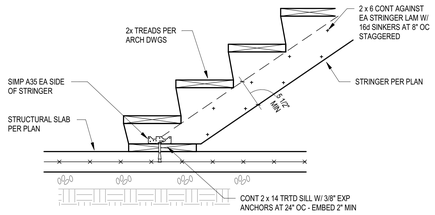

TYP STRINGER TO SLAB CONNECTION

1 SECTION
1" = 1'-0" 1 / S8.3B

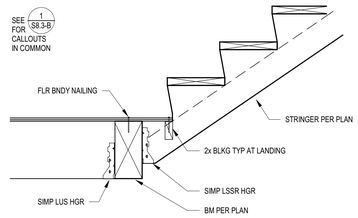

2 SECTION
1" = 1'-0" 2 / S8.3B

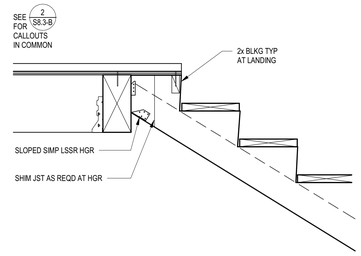

3 SECTION
1" = 1'-0" 3 / S8.3B

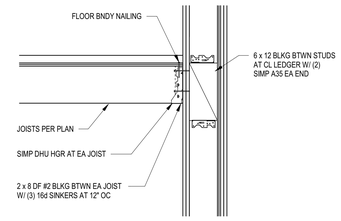

4 SECTION
1" = 1'-0" 4 / S8.3B

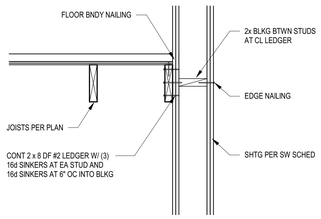

5 SECTION
1" = 1'-0" 5 / S8.3B

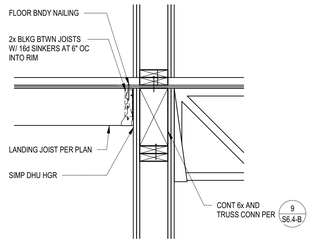

6 SECTION
1" = 1'-0" 6 / S8.3B

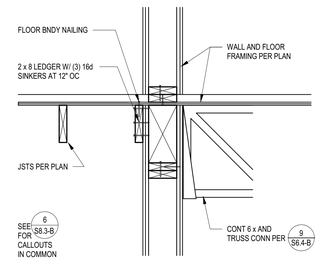

7 SECTION
1" = 1'-0" 7 / S8.3B

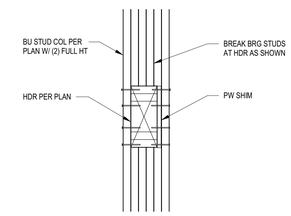

8 SECTION
1" = 1'-0" 8 / S8.3B

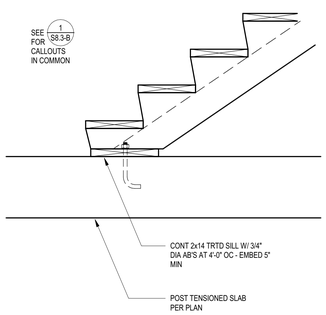

9 SECTION
1" = 1'-0" 9 / S8.3B

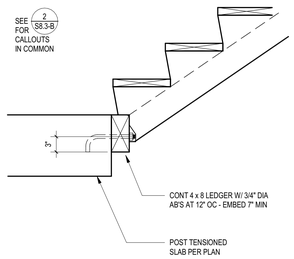

10 SECTION
1" = 1'-0" 10/ S8.3B

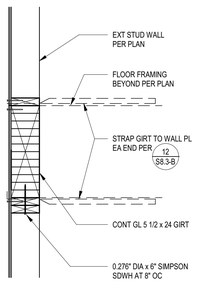

11 SECTION
1" = 1'-0" 11 / S8.3B

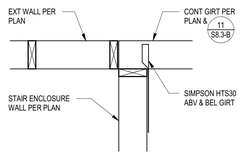

12 SECTION
1" = 1'-0" 12 / S8.3B

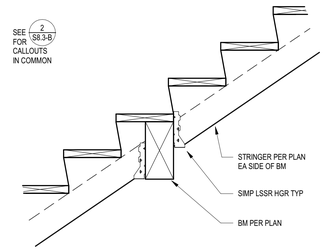

13 SECTION
1" = 1'-0" 13 / S8.3B

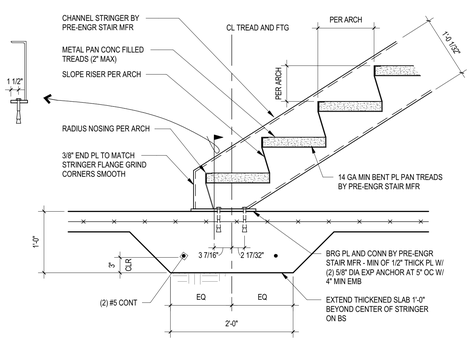

14 SECTION
1" = 1'-0" 14 / S8.3B

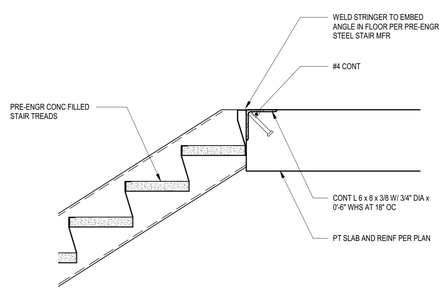

15 SECTION
1" = 1'-0" 15 / S8.3B

3/1/2024 7:24:18 PM

in site architects
1000 university ave. w. suite 130
st. paul, minnesota 55104
612-252-4820

NOTICE:
ALTERATION OF THIS DOCUMENT SHALL INVALIDATE THE PROFESSIONAL ENGINEER'S SEAL AND SIGNATURE. THIS DOCUMENT DOES NOT SURRENDER FROM RESERVED OWNERSHIP RIGHTS IN IT. THIS DOCUMENT IS FOR USE ONLY FOR THE PROJECT DESCRIBED IN IT. IT SHOULD NOT BE USED FOR ANY OTHER PURPOSE, INCLUDING, BY WAY OF EXAMPLE, ADDITIONS TO THIS PROJECT OR FOR ANY OTHER PROJECT.

WESLEY BRADLEY PARK 2
EAST BROWNSTONE
707 39TH AVENUE SE
PUYALLUP, WA 98374

PERMIT RESUBMITTAL
03/01/2024

ORIGINAL ISSUE: 3/22/2022

REVISIONS

No.	Description	Date

2220236.20
PROJECT NUMBER

KJK — DRAWN BY
ADM — CHECKED BY

WESLEY BRADLEY PARK 2
EAST BROWNSTONE

STAIR DETAILS

S8.3-B

AHBL
TACOMA SEATTLE SPOKANE TRI-CITIES
2215 North 30th Street, Suite 300, Tacoma, WA 98403
253.383.2422 TEL 253.383.2572 FAX www.ahbl.com WEB

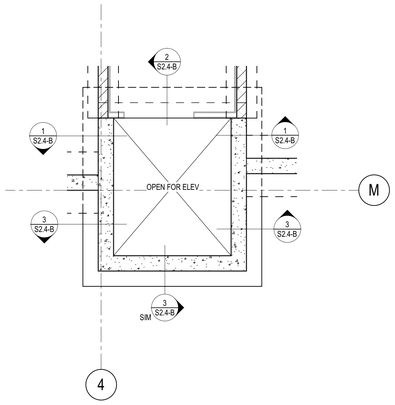

1 ELEVATOR L0 PLAN

1/4" = 1'-0"

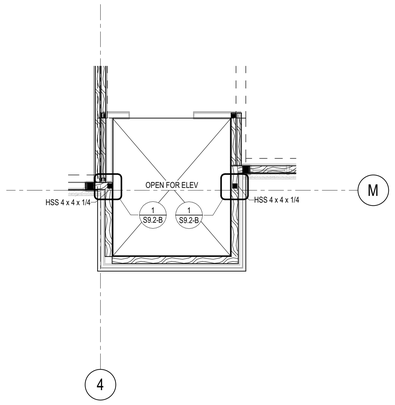

2 ELEVATOR L1 PLAN

1/4" = 1'-0"

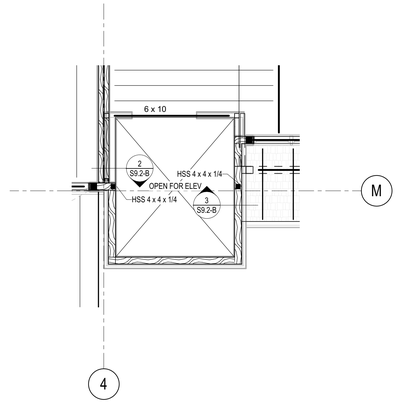

3 ELEVATOR L2-L3 PLAN

1/4" = 1'-0"

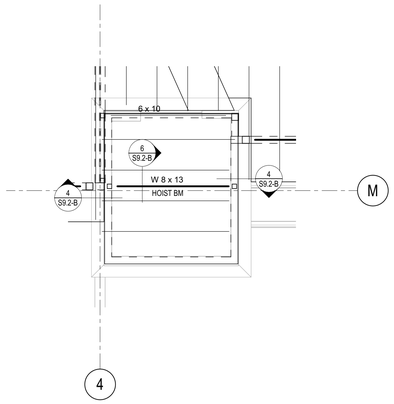

4 ELEVATOR ROOF PLAN

1/4" = 1'-0"

in site architects
1000 university ave. w. suite 130
st. paul, minnesota 55104
612-252-4820

NOTICE:
ALTERATION OF THIS DOCUMENT SHALL INVALIDATE THE PROFESSIONAL ENGINEER'S SEAL AND SIGNATURE. THIS DOCUMENT DOES NOT SEPARATE FROM RESERVED OWNERSHIP RIGHTS W.I.T. THIS DOCUMENT IS FOR USE ONLY FOR THE PROJECT IDENTIFIED IN THE TITLE BLOCK. DO NOT USE THIS DOCUMENT FOR REPAIR, REMODEL, OR ADDITION TO THIS PROJECT OR FOR ANY OTHER PROJECT.

WESLEY BRADLEY PARK 2
EAST BROWNSTONE

707 39TH AVENUE SE
PUYALLUP, WA 98374

PERMIT
RESUBMITTAL
03/01/2024

ORIGINAL ISSUE: 3/22/2022

REVISIONS

No.	Description	Date

2220236.20
PROJECT NUMBER

KJK DRAWN BY
ADM CHECKED BY

WESLEY BRADLEY PARK 2
EAST BROWNSTONE

ELEVATOR PLAN

S9.1-B

AHBL
TACOMA SEATTLE SPOKANE TRI-CITIES
2215 North 30th Street, Suite 300, Tacoma,WA 98403
253.383.2422 TEL 253.383.2572 FAX www.ahbl.com WEB

3/11/2024 7:24:22 PM

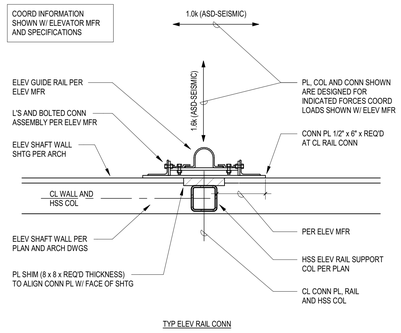

1 SECTION
1" = 1'-0" 1 / S9.2B

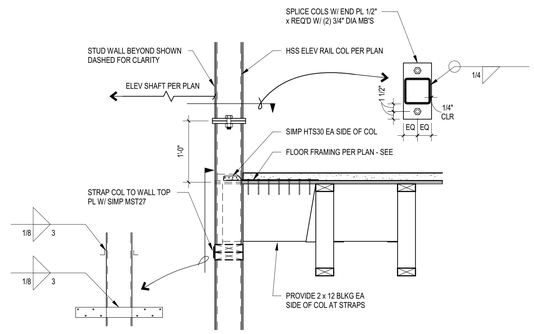

2 SECTION
1" = 1'-0" 2 / S9.2B

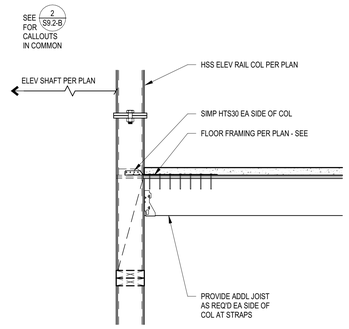

3 SECTION
1" = 1'-0" 3 / S9.2B

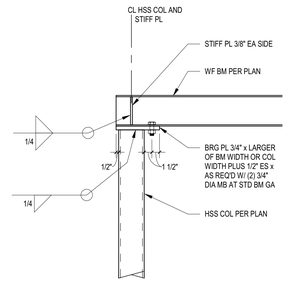

4 SECTION
1" = 1'-0" 4 / S9.2B

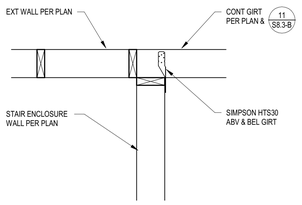

5 SECTION
1" = 1'-0" 5 / S9.2B

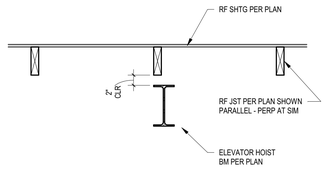

6 SECTION
1" = 1'-0" 6 / S9.2B

in site architects
1000 university ave. w. suite 130
st. paul, minnesota 55104
612-252-4820

NOTICE:
ALTERATION OF THIS DOCUMENT SHALL INVALIDATE THE PROFESSIONAL ENGINEER'S SEAL AND SIGNATURE. THIS DOCUMENT DOES NOT SURRENDER FROM RESERVED OWNERSHIP RIGHTS IN IT. THIS DOCUMENT IS FOR USE ON ONLY FOR THE PROJECT IDENTIFIED IN IT. THIS DOCUMENT MAY NOT BE USED FOR REPAIR, REMODEL, OR ADDITION TO THIS PROJECT OR FOR ANY OTHER PROJECT.

WESLEY BRADLEY PARK 2
EAST BROWNSTONE
707 39TH AVENUE SE
PUYALLUP, WA 98374

PERMIT RESUBMITTAL
03/01/2024

ORIGINAL ISSUE: 3/22/2022

REVISIONS

No.	Description	Date

2220236.20
PROJECT NUMBER

KJK DRAWN BY
ADM CHECKED BY

WESLEY BRADLEY PARK 2
EAST BROWNSTONE

ELEVATOR DETAILS
S9.2-B

AHBL
TACOMA SEATTLE SPOKANE TRI-CITIES
2215 North 30th Street, Suite 300, Tacoma,WA 98403
253.383.2422 TEL 253.383.2572 FAX www.ahbl.com WEB

3/1/2024 7:24:26 PM

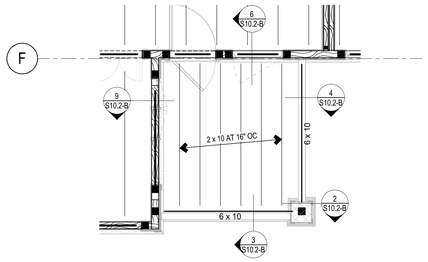

1 **BALCONY A FRAMING**
1/4" = 1'-0"

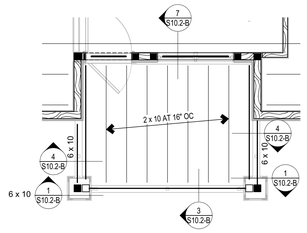

2 **BALCONY B FRAMING**
1/4" = 1'-0"

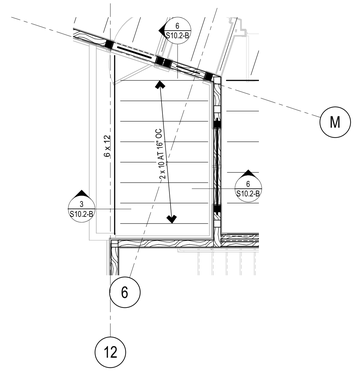

3 **BALCONY C FRAMING**
1/4" = 1'-0"

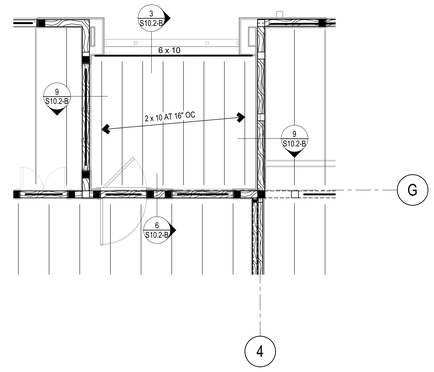

4 **BALCONY D FRAMING**
1/4" = 1'-0"

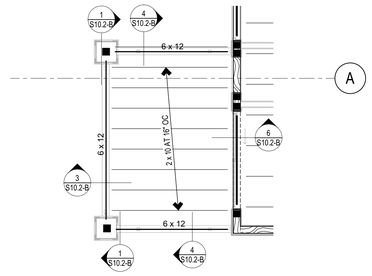

5 **BALCONY E FRAMING**
1/4" = 1'-0"

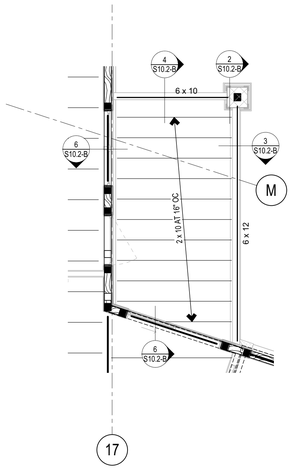

6 **BALCONY F FRAMING**
1/4" = 1'-0"

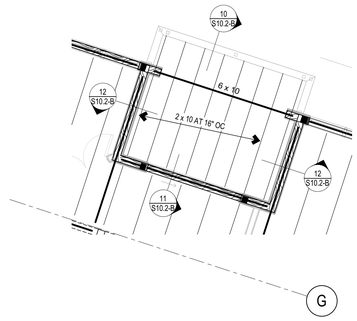

7 **BALCONY G FRAMING**
1/4" = 1'-0"

in site architects
1000 university ave. w. suite 130
st. paul, minnesota 55104
612-252-4820

NOTICE:
ALTERATION OF THIS DOCUMENT SHALL INVALIDATE THE PROFESSIONAL ENGINEER'S SEAL AND SIGNATURE. THIS DOCUMENT DOES NOT SURRENDER FROM RESERVED OWNERSHIP RIGHTS IN IT. THIS DOCUMENT IS FOR USE ON ONLY FOR THE PROJECT IDENTIFIED IN IT. THIS DOCUMENT MAY NOT BE USED FOR REPAIR, REMODEL, OR ADDITION TO THIS PROJECT OR FOR ANY OTHER PROJECT.

WESLEY BRADLEY PARK 2
EAST BROWNSTONE

707 39TH AVENUE SE
PUYALLUP, WA 98374

PERMIT
RESUBMITTAL
03/01/2024

ORIGINAL ISSUE: 3/22/2022

REVISIONS

No.	Description	Date

2220236.20
PROJECT NUMBER

KJK DRAWN BY
ADM CHECKED BY

WESLEY BRADLEY PARK 2
EAST BROWNSTONE

BALCONY PLANS

S10.1-B

AHBL
TACOMA SEATTLE SPOKANE TRI-CITIES
2215 North 30th Street, Suite 300, Tacoma,WA 98403
253.383.2422 TEL 253.383.2572 FAX www.ahbl.com WEB

3/1/2024 7:24:34 PM

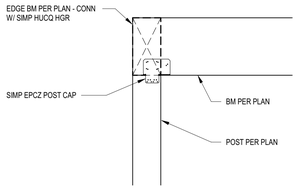

1 **SECTION**
1" = 1'-0" 1 / S10.2B

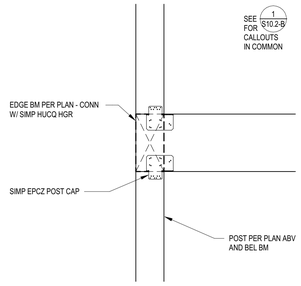

2 **SECTION**
1" = 1'-0" 2 / S10.2B

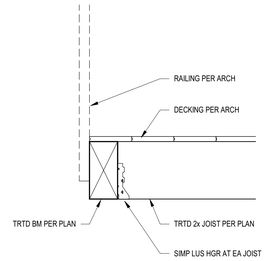

3 **SECTION**
1" = 1'-0" 3 / S10.2B

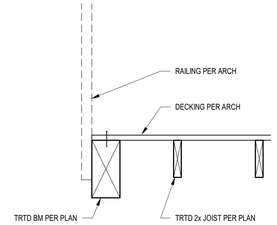

4 **SECTION**
1" = 1'-0" 4 / S10.2B

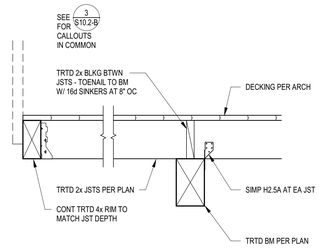

5 **SECTION**
1" = 1'-0" 5 / S10.2B

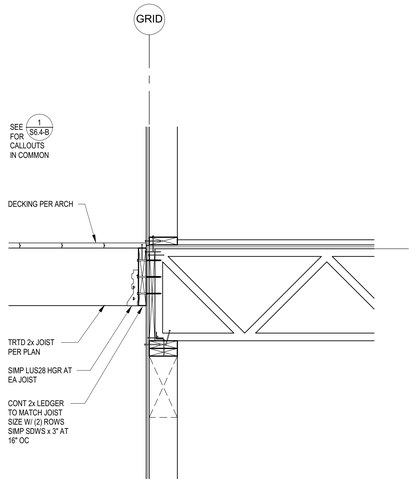

6 **SECTION**
1" = 1'-0" 6 / S10.2B

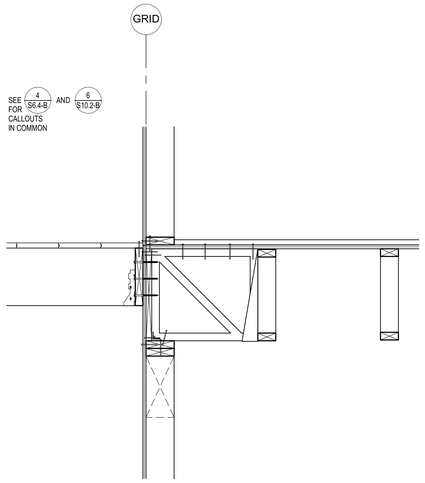

7 **SECTION**
1" = 1'-0" 7 / S10.2B

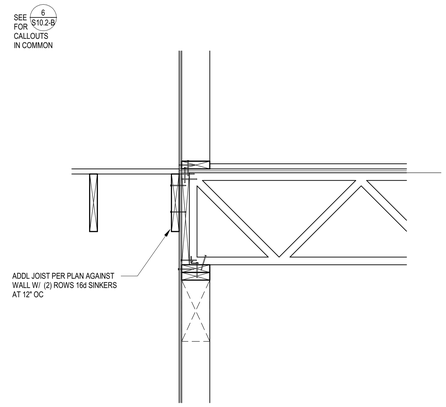

8 **SECTION**
1" = 1'-0" 8 / S10.2B

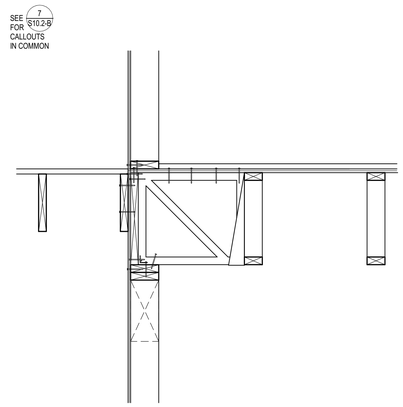

9 **SECTION**
1" = 1'-0" 9 / S10.2B

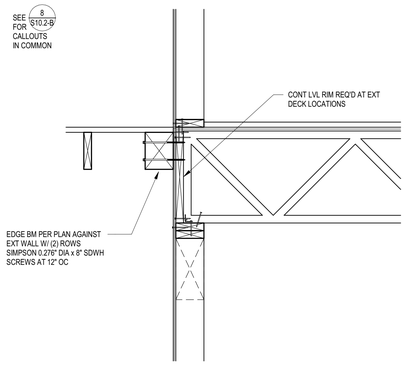

10 **SECTION**
1" = 1'-0" 10 / S10.2B

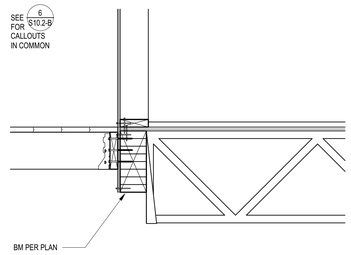

11 **SECTION**
1" = 1'-0" 11 / S10.2B

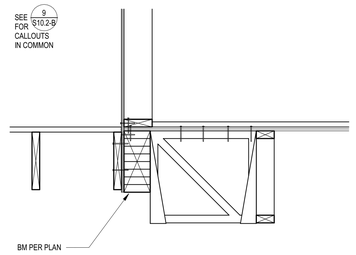

12 **SECTION**
1" = 1'-0" 12 / S10.2B

in site architects
1000 university ave. w. suite 130
st. paul, minnesota 55104
612-252-4820

NOTICE:
ALTERATION OF THIS DOCUMENT SHALL INVALIDATE THE PROFESSIONAL ENGINEER'S SEAL AND SIGNATURE. THIS DOCUMENT DOES NOT SEPARATE FROM RESERVED OWNERSHIP RIGHTS W.I.T. THIS DOCUMENT IS FOR USE ON( ) FOR THE PROJECT IDENTIFIED IN THE TITLE BLOCK. DO NOT USE THIS DOCUMENT FOR REPAIR, REMODEL, OR ADDITION TO THIS PROJECT OR FOR ANY OTHER PROJECT.

WESLEY BRADLEY PARK 2
EAST BROWNSTONE
707 39TH AVENUE SE
PUYALLUP, WA 98374

PERMIT
RESUBMITTAL
03/01/2024

ORIGINAL ISSUE: 3/22/2022

REVISIONS

No.	Description	Date

2220236.20
PROJECT NUMBER

KJK DRAWN BY
ADM CHECKED BY

WESLEY BRADLEY PARK 2
EAST BROWNSTONE

BALCONY FRAMING
DETAILS

S10.2-B

AHBL
TACOMA SEATTLE SPOKANE TRI-CITIES
2215 North 30th Street, Suite 300, Tacoma,WA 98403
253.383.2422 TEL 253.383.2572 FAX www.ahbl.com WEB

3/1/2024 7:24:38 PM

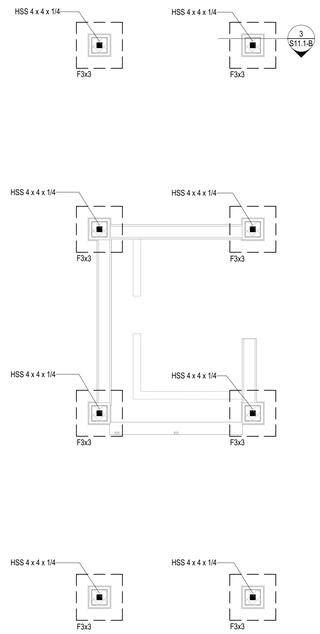

1 CANOPY FOUNDATION PLAN

1/4" = 1'-0"

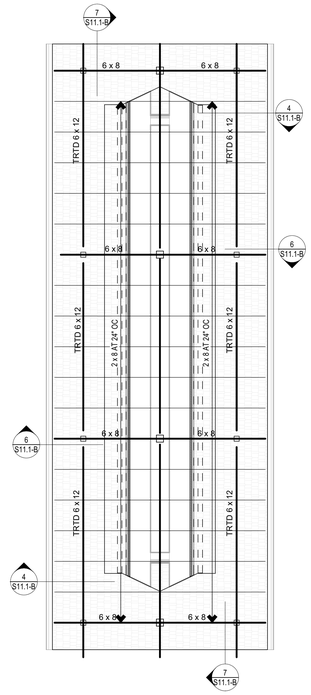

2 CANOPY FRAMING PLAN

1/4" = 1'-0"

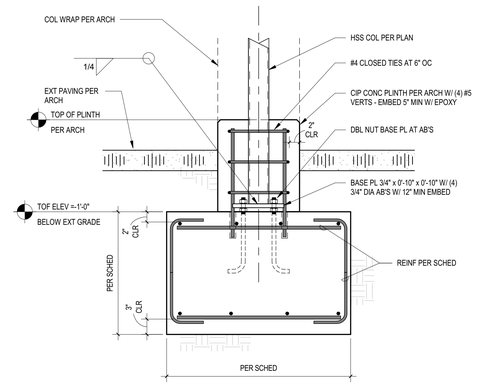

3 SECTION

1" = 1'-0" 3/ S 11.1-B

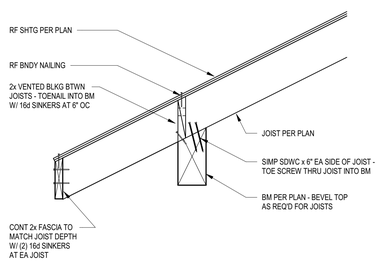

4 SECTION

1" = 1'-0" 4 / S11.1-B

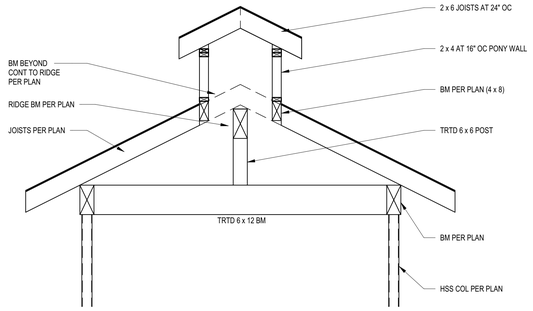

TYPICAL CANOPY ELEVATION

5 SECTION

1/2" = 1'-0" 5 / S11.1-B

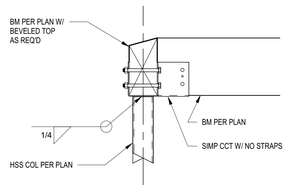

6 SECTION

1" = 1'-0" 6 / S11.1-B

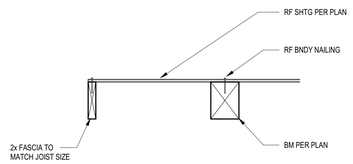

7 SECTION

1" = 1'-0" 7 / S11.1-B

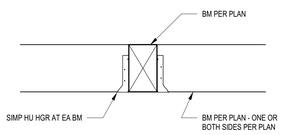

8 SECTION

1" = 1'-0" 8 / S11.1-B

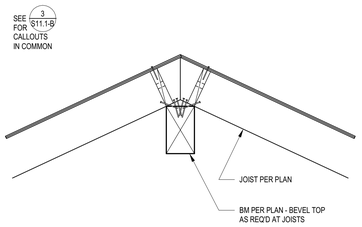

9 SECTION

1" = 1'-0" 9 / S11.1-B

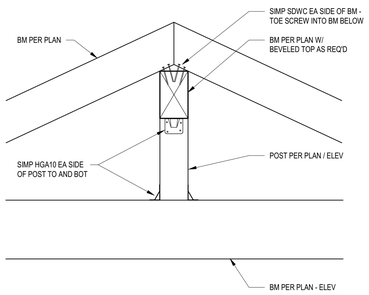

10 SECTION

1" = 1'-0" 10 / S11.1-B

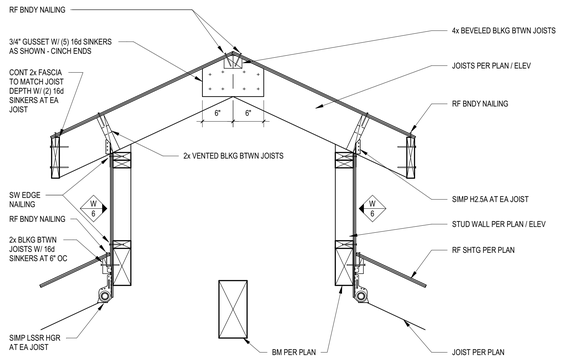

11 SECTION

1" = 1'-0" 11 / S11.1-B

in site architects
1000 university ave. w. suite 130
st. paul, minnesota 55104
612-252-4820

NOTICE:
ALTERATION OF THIS DOCUMENT SHALL INVALIDATE THE PROFESSIONAL ENGINEER'S SEAL AND SIGNATURE. THIS DOCUMENT DOES NOT DERIVE FROM RESERVED OWNERSHIP RIGHTS IN IT. THIS DOCUMENT IS FOR USE ONLY FOR THE PROJECT IDENTIFIED IN IT. IT SHOULD NOT BE USED FOR ANY OTHER PURPOSE, REPAIR, REMODEL, OR ADDITION TO THIS PROJECT OR FOR ANY OTHER PROJECT.

WESLEY BRADLEY PARK 2
EAST BROWNSTONE

707 39TH AVENUE SE
PUYALLUP, WA 98374

PERMIT RESUBMITTAL
03/01/2024

ORIGINAL ISSUE: 3/22/2022

REVISIONS

No.	Description	Date

2220236.20
PROJECT NUMBER

KJK DRAWN BY
ADM CHECKED BY

WESLEY BRADLEY PARK 2
EAST BROWNSTONE

CANOPY PLANS AND DETAILS

S11.1-B

AHBL
TACOMA SEATTLE SPOKANE TRI-CITIES
2215 North 30th Street, Suite 300, Tacoma,WA 98403
253.383.2422 TEL 253.383.2572 FAX www.ahbl.com WEB

3/1/2024 7:24:43 PM

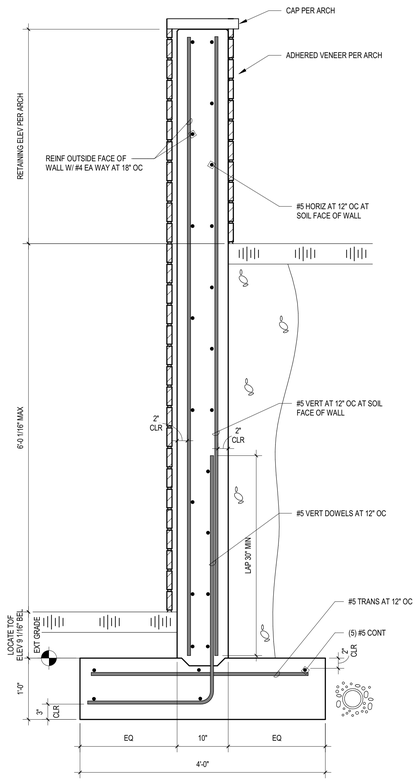

AREA "C" EXT RETAINING WALL

1 SECTION

1" = 1'-0" 1 / S12.1-B

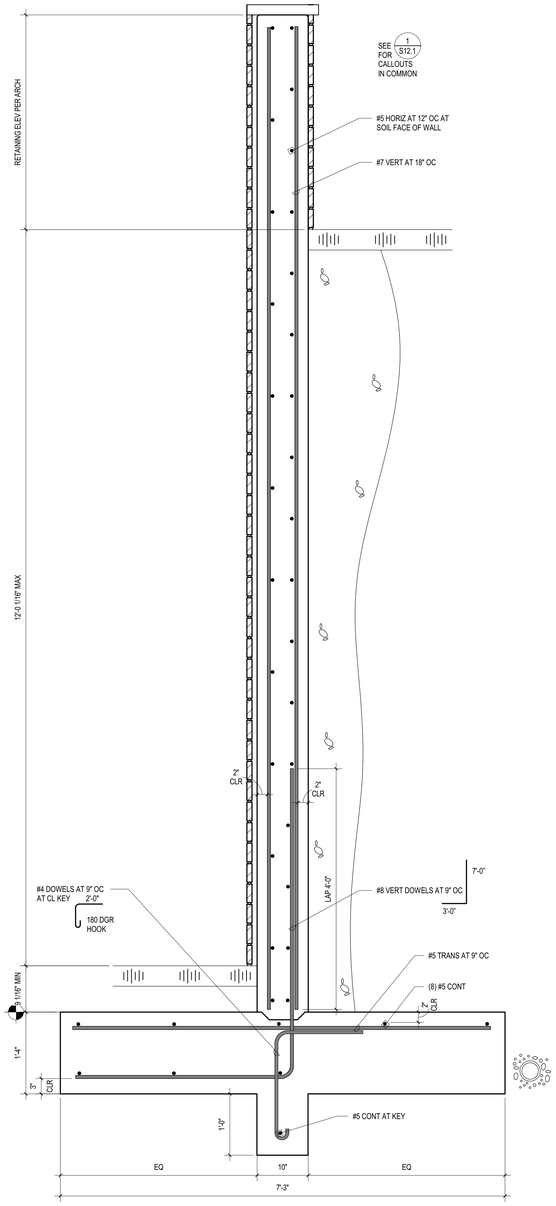

AREA "C" EXT RETAINING WALL

2 SECTION

1" = 1'-0" 2 / S12.1-B

3/1/2024 7:24:46 PM

in site architects
1000 university ave. w. suite 130
st. paul, minnesota 55104
612-252-4820

NOTICE:
ALTERATION OF THIS DOCUMENT SHALL INVALIDATE THE PROFESSIONAL ENGINEER'S SEAL AND SIGNATURE. THIS DOCUMENT DOES NOT DERIVE FROM RESERVED OWNERSHIP RIGHTS IN IT. THIS DOCUMENT IS FOR USE ON ONLY FOR THE PROJECT IDENTIFIED IN IT. IT SHOULD NOT BE USED FOR OTHER PURPOSES OR ADDITIONS TO THIS PROJECT OR FOR ANY OTHER PROJECT.

WESLEY BRADLEY PARK 2
EAST BROWNSTONE

707 39TH AVENUE SE
PUYALLUP, WA 98374

PERMIT RESUBMITTAL
03/01/2024

ORIGINAL ISSUE: 06/23/23

REVISIONS

No.	Description	Date

2220236.20
PROJECT NUMBER

Author_ Checker
DRAWN BY CHECKED BY

WESLEY BRADLEY PARK 2
EAST BROWNSTONE

AHBL
TACOMA SEATTLE SPOKANE TRI-CITIES
2215 North 30th Street, Suite 300, Tacoma,WA 98403
253.383.2422 TEL 253.383.2572 FAX www.ahbl.com WEB

SITE DETAILS

S12.1