City of Puyallup Development Engineering APPROVED

See permit for additional requirements.

Linda Lian
04/04/2024
11:36:46 AM

The applicant shall request a sediment control and erosion inspection with a City Engineering Inspector through the CityView portal at least 48 hours in advance of job start. Refer to the Stormwater Fact Sheet and City Standards 02.03.02 & 05.02.01

Sediment control and erosion procedures shall be practiced eliminating and preventing off site damage. Stormwater runoff originating upgrade of exposed areas shall be controlled to reduce erosion and sediment loss during the period of exposure. See civil permit PRCCP20230970 for specifications

Roof downspout control is required. Steps shall be taken to prevent drainage onto adjacent lots. See civil permit PRCCP20230970 for specifications

Call Before You Dig. It's the law. Locate all utilities prior to starting work Dial 811 or call 1-800-424-5555.

TYPICAL AT EACH APARTMENT BUILDING
A stand of trees with a canopy of 1,000 square feet (as measured in frontal view rather than top view) located no farther than 20 feet from a facade of the building, consisting of either existing trees, or planted trees. (Per PMC 20.26.200 (4) (b) (v))

The applicant is responsible to show onsite private utilities services for each building on a site plan. This includes sewer or septic, storm and water. [Site Plan Sheet 1 of]

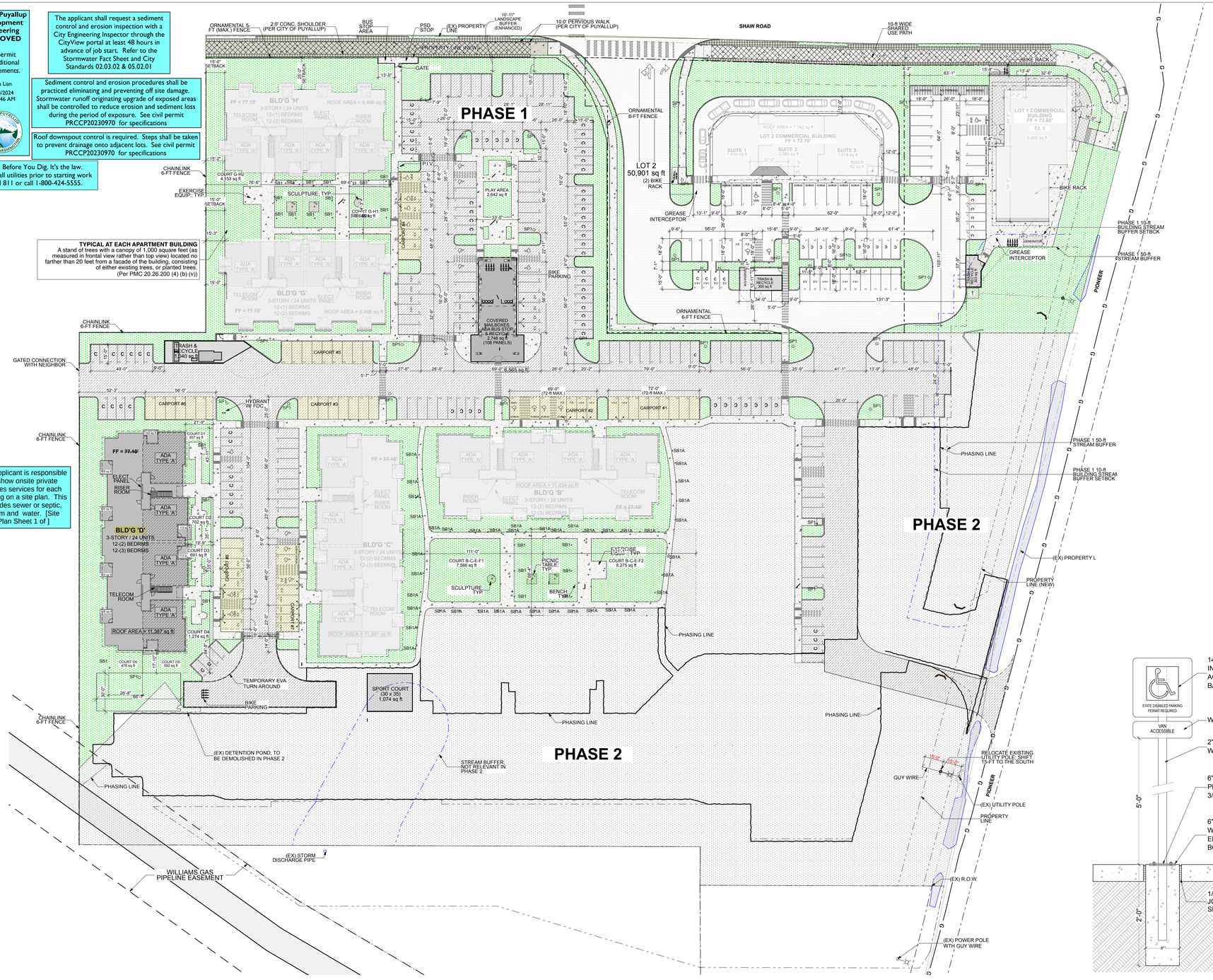

1 OVERALL SITE PLAN - PHASE 1
SCALE: 1" = 40'

N

ACCESSIBLE MAILBOX REQUIREMENTS

905.1 General. Accessible storage facilities shall comply with ICC A117.1. Section 905.
905.2 Clear Floor Space. A clear floor space complying with ICC A117.1. Section 305 shall be provided.
905.3 Height. Accessible storage elements shall comply with at least one of the reach ranges specified in ICC A117.1. Section 308.
905.4 Operable Parts. Operable parts of storage facilities shall comply with ICC A117.1. Section 309.

309.4 Operation. Operable parts shall be operable with one hand and shall not require tight grasping, pinching, or twisting of the wrist. The force required to activate operable parts shall be 5.0 pounds maximum.

308.2 Forward Reach.
308.2.1 Unobstructed. Where a forward reach is unobstructed, the high forward reach shall be 48 inches maximum and the low forward reach shall be 15 inches minimum above the floor.
308.3 Side Reach.
308.3.1 Unobstructed. Where a clear floor space allows a parallel approach to an element and the side reach is unobstructed, the high side reach shall be 48 inches maximum and the low side reach shall be 15 inches minimum above the floor.

LAND USE SITE LIGHTING REQUIREMENTS

1. Light trespass. Light trespass from sites in non-residential zoning districts shall not exceed 3 lux (0.3 foot candles) at parcel boundaries with residential zoning districts. This luminance value shall be measured at the eye in a plane perpendicular to the line-of-sight when looking at the brightest source in the field of view at any point on the property line of any residential parcel.
2. Residential light pollution. To ensure control of and to minimize glare, any lighting within 100 feet of an R District shall use luminaries which meet the Illuminating Engineering Society's cutoff light distribution specification.
3. General light pollution. To control and minimize glare, all other luminaries for area and/or off-street parking shall meet the Illuminating Engineering Society's semi-cutoff light distribution specification. Lighting shall be directed toward the site, with cutoff shields or other means, to prevent spillover glare to adjacent properties or vehicular traffic.
Luminaires with a light source not greater than 1800 lumens (100 watt incandescent) are exempt from this requirement.

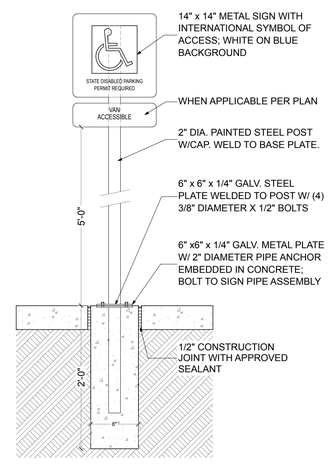

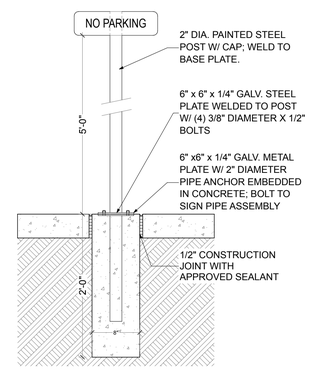

2 SITE SIGNAGE
SCALE: 1" = 1'-0"

PRMU20240401

City of Puyallup Building REVIEWED FOR COMPLIANCE
BSnowden
05/13/2024
2:42:42 PM

SYNTHESIS 9, LLC
523 N. D ST.
TACOMA, WA 98403

REUSE OF DOCUMENTS
THIS DOCUMENT AND THE IDEAS AND DESIGNS INCORPORATED HERIN, AS INSTRUMENTS OF PROFESSIONAL SERVICE, ARE THE PROPERTY OF SYNTHESIS 9, LLC AND ARE NOT TO BE USED OR REPRODUCED IN WHOLE OR IN PART WITHOUT THE WRITTEN AUTHORIZATION OF SYNTHESIS 9, LLC.

REGISTERED ARCHITECT
9251
BRIAN LIAN DOBKIN
STATE OF WASHINGTON

EAST TOWN CROSSING
BUILDING 'D'
PIONEER & SHAW PUYALLUP WA

REVISIONS

REVISIONS

DRAWN BY:	BL / CM
CHECKED BY:	BL
DATE:	24.03.11
TITLE:	SITE PLAN *REF. ONLY
PROJECT # :	2016
SHEET:	AS1.0

AGENCY REVIEW | 24.03.11