JOHNSTON BURKHOLDER ASSOCIATES

consulting structural engineers

PRCTI20241065

City of Puyallup
Development & Permitting Services
ISSUED PERMIT
Building | Planning
Engineering | Public Works
Fire | Traffic

STRUCTURAL FIXTURE ANCHORAGE CALCULATIONS

FOR

Puyallup, WA

310 31st Ave SE
Store #02403

PREPARED FOR

CITY OF PUYALLUP, WA

04/25/24

JBA PROJECT #2401802403

930 CENTRAL • KANSAS CITY, MO 64105
(816) 421-4200 • WWW.JBAENGR.COM

Calculation Index

JOHNSTON BURKHOLDER ASSOCIATES consulting structural engineers	PROJECT NO: 2401802403	Sheet No: 1	Of: 66
	PROJECT NAME: #02403 - Puyallup, WA		
	MADE BY: KSH	DATE: 04/19/24	
	CHECKED BY:	DATE:	

Lateral Seismic Analysis

IBC 2021 / ASCE 7-16 / 2016 RMI (ANSI/MH16.3-16)

	Braced	Down Aisle	
Response Modification Factor, R =	4.0	6.0	ASCE-7, Table 15.4-1
Overstrength Factor, Omega, Ω_o =	2.0		ASCE-7, Table 15.4-1
Deflection Amplification Factor, C_d =	3.5		ASCE-7, Table 15.4-1
Detail Reference Section =	15.5.3		ASCE-7, Table 15.4-1
Occupancy Category =	II		IBC, Table 1604.5
Importance Factor, I_p =	1.0		ASCE-7 Sect. 15.5.3
0.2 Second Period Accel., S_s =	1.261 g		IBC Figs. 1613.2.1(1-10), ASCE-7 Figs. 22-1 thru 22-8
1.0 Second Period Accel., S_1 =	0.435 g		IBC Figs. 1613.2.1(1-10), ASCE-7 Figs. 22-1 thru 22-8
(Soil) Site Class =	D (Default)		IBC 1613.2.2 -> ASCE-7, Table 20.3-1
F_a =	1.200		IBC Table 1613.2.3(1), ASCE-7 Table 11.4-1
F_v =	1.865		IBC Table 1613.2.3(2), ASCE-7 Table 11.4-2 + Sect. 11.4.8
S_{MS} =	1.513 g		IBC eq. 16-20, ASCE-7 eq. 11.4-1
S_{M1} =	0.811 g		IBC eq. 16-21, ASCE-7 eq. 11.4-2
S_{DS} =	0.841 g		IBC eq. 16-22, ASCE-7 eq. 11.4-3
S_{D1} =	0.541 g		IBC eq. 16-23, ASCE-7 eq. 11.4-4
Seismic Design Category			
--based on S_{DS} =	D		IBC Table 1613.2.5(1), ASCE-7 Table 11.6-1
-- based on S_{D1} =	D		IBC Table 1613.2.5(2), ASCE-7 Table 11.6-2

Store Latitude/Longitude Coordinates (per Google):

N	47° 09' 40"	47.1611
W	122° 17' 20"	122.2889

Shelving Fixture

C_s =	0.210	RMI sect. 2.6.3 w/ ASCE-7, Sect. 11.4.8
C_s, min =	0.037	RMI sect. 2.6.3 and ASCE-7 sect. 15.5.3
Base Shear, $V = C_s I_p W$ =	0.210 W	RMI sect. 2.6.2

Rack Fixture

	Braced	Down Aisle	
Period, T ($H_{rack} \le 96"$) =	0.265	1.249	sec. - RMI sect. 2.6.3
Period, T ($96" < H_{rack} \le 120"$) =	0.483	1.182	sec. - RMI sect. 2.6.3
Period, T ($H_{rack} > 120"$) =	0.352	1.348	sec. - RMI sect. 2.6.3
Period, T (H_{rack} = 168" w/Base Isolator) =	NA	NA	sec. - RMI sect. 2.6.3 <--- Not Applicable for this project
C_s ($H_{rack} \le 96"$) =	0.210	0.072	--> min[S_{DS}/R , $S_{D1}/((T)(R))$]
C_s ($96" < H_{rack} \le 120"$) =	0.210	0.076	--> min[S_{DS}/R , $S_{D1}/((T)(R))$]
C_s ($H_{rack} > 120"$) =	0.210	0.067	--> min[S_{DS}/R , $S_{D1}/((T)(R))$]
C_s (H_{rack} = 168" w/Base Isolator) =	NA	NA	--> min[S_{DS}/R , $S_{D1}/((T)(R))$]
C_s, min =	0.037	0.037	--> RMI sect. 2.6.3 and ASCE-7 sect. 15.5.3

T_S, (S_{D1}/S_{DS}) = 0.643 sec.

T_L = 6 sec.

Base Shear:

	Braced	Down Aisle	
V ($H_{rack} \le 96"$) = $C_s I_p W_s$ =	0.210	0.072 W_s	--> RMI sect. 2.6.2
V ($96" < H_{rack} \le 120"$) = $C_s I_p W_s$ =	0.210	0.076 W_s	--> RMI sect. 2.6.2
V ($H_{rack} > 120"$) = $C_s I_p W_s$ =	0.210	0.067 W_s	--> RMI sect. 2.6.2
V (H_{rack}=168"w/Base Iso) = $C_s I_p W_s$ =	NA	NA W_s	--> RMI sect. 2.6.2

Load Combinations for LRFD Member Design (RMI, Section 2.2):

for RISA Frame analysis

DL = Dead Load

PL = Maximum load from pallets/product stored on racks

EL = Seismic Load - RMI section 2.6.6 - Vert. Distribution

LC #1: 1.4DL + 1.2PL

LC #2: 1.2DL + 1.4PL

LC #7a: $(0.9-0.2S_{DS})DL + (0.9-0.2S_{DS})PL_{app} + \rho(1.0)EL$ <--- PL_{app} = (0.67)PL at each shelf level; ρ = 1.3 at "Braced" frames

0.7318 DL 0.7318 PL_{app} 1.0000 EL

LC #7b: $(0.9-0.2S_{DS})DL + (0.9-0.2S_{DS})PL_{app} + \rho(1.0)EL$ <--- PL_{app} = (1.0)PL at top shelf only; ρ = 1.3 at "Braced" frames

0.7318 DL 0.7318 PL_{app} 1.0000 EL

LC #5: $(1.2+0.2S_{DS})DL + (0.85+0.2S_{DS})\beta PL + \rho(1.0)EL$ <--- ρ = 1.3 at "Braced" frames, β = 0.7, RMI, sect. 2.1

1.3682 DL 0.7127 PL 1.0000 EL

JOHNSTON BURKHOLDER ASSOCIATES consulting structural engineers	PROJECT NO: 2401802403	Sheet No: 2	Of: 66
	PROJECT NAME: #02403 - Puyallup, WA		
	MADE BY: KSH	DATE: 04/19/24	
	CHECKED BY:	DATE:	

Lateral Seismic Analysis

IBC 2021 / ASCE 7-16 / 2016 RMI (ANSI/MH16.3-16)

	Braced	Down Aisle	
Response Modification Factor, R =	4.0	6.0	ASCE-7, Table 15.4-1
Overstrength Factor, Omega, Ω_o =	2.0		ASCE-7, Table 15.4-1
Deflection Amplification Factor, C_d =	3.5		ASCE-7, Table 15.4-1
Detail Reference Section =	15.5.3		ASCE-7, Table 15.4-1
Occupancy Category =	II		IBC, Table 1604.5
Importance Factor, I_p =	1.5		ASCE-7 Sect. 15.5.3
0.2 Second Period Accel., S_s =	1.261 g		IBC Figs. 1613.2.1(1-10), ASCE-7 Figs. 22-1 thru 22-8
1.0 Second Period Accel., S_1 =	0.435 g		IBC Figs. 1613.2.1(1-10), ASCE-7 Figs. 22-1 thru 22-8
(Soil) Site Class =	D (Default)		IBC 1613.2.2 -> ASCE-7, Table 20.3-1
F_a =	1.20		IBC Table 1613.2.3(1), ASCE-7 Table 11.4-1
F_v =	1.87		IBC Table 1613.2.3(2), ASCE-7 Table 11.4-2 + Sect. 11.4.8
S_{MS} =	1.513 g		IBC eq. 16-20, ASCE-7 eq. 11.4-1
S_{M1} =	0.811 g		IBC eq. 16-21, ASCE-7 eq. 11.4-2
S_{DS} =	0.841 g		IBC eq. 16-22, ASCE-7 eq. 11.4-3
S_{D1} =	0.541 g		IBC eq. 16-23, ASCE-7 eq. 11.4-4
Seismic Design Category			
--based on S_{DS} =	D		IBC Table 1613.2.5(1), ASCE-7 Table 11.6-1
-- based on S_{D1} =	D		IBC Table 1613.2.5(2), ASCE-7 Table 11.6-2

Store Latitude/Longitude Coordinates (per Google):

N	47° 09' 40"	47.1611
W	122° 17' 20"	122.2889

Shelving Fixture

C_s =	0.210	RMI sect. 2.6.3 w/ ASCE-7, Sect. 11.4.8
C_s, min =	0.037	RMI sect. 2.6.3 and ASCE-7 sect. 15.5.3
Base Shear, $V = C_s I_p W$ =	0.315 W	RMI sect. 2.6.2

Rack Fixture

	Braced	Down Aisle	
Period, T ($H_{rack} \le 96"$) =	0.265	1.249	sec. - RMI sect. 2.6.3
Period, T ($96" < H_{rack} \le 120"$) =	0.483	1.182	sec. - RMI sect. 2.6.3
Period, T ($H_{rack} > 120"$) =	0.352	1.348	sec. - RMI sect. 2.6.3
Period, T (H_{rack} = 168" w/Base Isolator) =	NA	NA	sec. - RMI sect. 2.6.3 <--- Not Applicable for this project
C_s ($H_{rack} \le 96"$) =	0.210	0.072	--> min[S_{DS}/R , $S_{D1}/((T)(R))$]
C_s ($96" < H_{rack} \le 120"$) =	0.210	0.076	--> min[S_{DS}/R , $S_{D1}/((T)(R))$]
C_s ($H_{rack} > 120"$) =	0.210	0.067	--> min[S_{DS}/R , $S_{D1}/((T)(R))$]
C_s (H_{rack} = 168" w/Base Isolator) =	NA	NA	--> min[S_{DS}/R , $S_{D1}/((T)(R))$]
C_s, min =	0.037	0.037	--> RMI sect. 2.6.3 and ASCE-7 sect. 15.5.3

Base Shear:

	Braced	Down Aisle	
V ($H_{rack} \le 96"$) = $C_s I_p W_s$ =	0.315	0.108 W_s	--> RMI sect. 2.6.2
V ($96" < H_{rack} \le 120"$) = $C_s I_p W_s$ =	0.315	0.114 W_s	--> RMI sect. 2.6.2
V ($H_{rack} > 120"$) = $C_s I_p W_s$ =	0.315	0.100 W_s	--> RMI sect. 2.6.2
V (H_{rack}=168"w/Base Iso) = $C_s I_p W_s$ =	NA	NA W_s	--> RMI sect. 2.6.2

JOHNSTON BURKHOLDER ASSOCIATES consulting structural engineers	PROJECT NO: 2401802403	Sheet No: 3	Of: 66
	PROJECT NAME: #02403 - Puyallup, WA		
	MADE BY: KSH	DATE: 04/19/24	
	CHECKED BY:	DATE:	

Gondola (Shelving) Anchorage Design - Load Diagrams

IBC 2021 / ASCE 7-16 / 2016 RMI (ANSI/MH16.3-16)

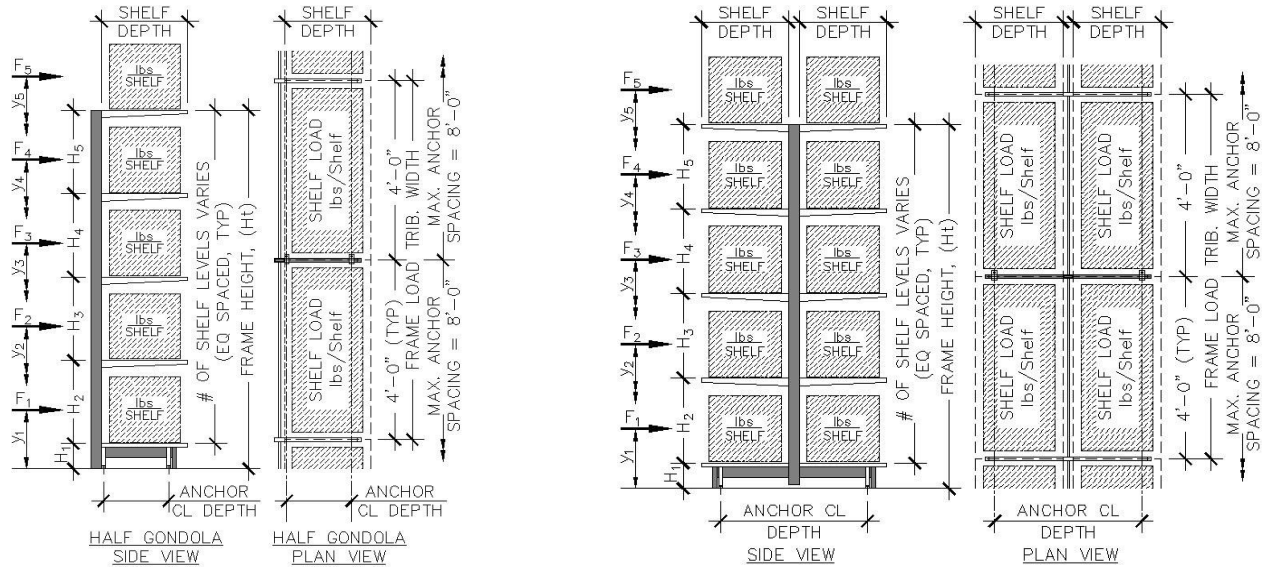

Base Shear, RMI, sect. 2.6.2:

$V = (C_s)(I_p)(W_s)$ C_sI_p, C_s based on frame height and I_p = 1.0 or 1.5 with Public Access

$W_s = (0.67(PL_{RF})(PL)) + DL$ PL_{RF} = 1.0,for Cross-Aisle frames

PL = (0.67)PL, for RMI, sect. 2.6.9(1) & ASCE 7, 15.5.3.6(a)

(1.0)PL, for RMI, sect. 2.6.9(2) & ASCE 7, 15.5.3.6(b)

Overturning Stability:

Center of Mass (CM) of Product Load (PL) is typically 6" above the shelf or (1/2)(Shelf height, H_i) when shelf height is < 12".

$F_{x = 1..n}$, is set at a Service Load level using $V = (0.7)[C_sI_pW_s]$

Load Case #1: (2/3)PL at each shelf level RMI, sect.2.6.9(1) & ASCE 7, 15.5.3.3.2(a)

ω_x= (0.67)PL	$h_x = y_i$	(0.7V)(ω_x)(h_x)		Ovturn'g Mom,M_{OT}	Resist'g Mom, M_{RST}
		(ω_x)(h_x)	$\sum\omega_x h_x$		
ω_5	y_5	(ω_5)(y_5)	F_5	(F_5)(y_5)	ω_5(D/2)
ω_4	y_4	(ω_4)(y_4)	F_4	(F_4)(y_4)	ω_4(D/2)
ω_3	y_3	(ω_3)(y_3)	F_3	(F_3)(y_3)	ω_3(D/2)
ω_2	y_2	(ω_2)(y_2)	F_2	(F_2)(y_2)	ω_2(D/2)
ω_1	y_1	(ω_1)(y_1)	F_1	(F_1)(y_1)	ω_1(D/2)
ω_u=DL_{frame}	y_u=Ht/2	(ω_u)(y_u)	F_u	(F_u)(y_u)	ω_u(D/2)
		$\sum(\omega_x)(h_x)$	$\sum(F_u+F_i)$=0.7V	$M_{OT}=\sum(F)(y)$	$M_{RST}=\sum(\omega)(D/2)$

Load Case #2: (1.0)PL at top shelf level only RMI, sect.2.6.9(2) & ASCE 7, 15.5.3.3.2(b

ω_x= (1.0)PL	$h_x = y_i$	(0.7V)(ω_x)(h_x)		Ovturn'g Mom,M_{OT}	Resist'g Mom, M_{RST}
		(ω_x)(h_x)	$\sum\omega_x h_x$		
ω_5	y_5	(ω_5)(y_5)	F_5	(F_5)(y_5)	ω_5(D/2)
ω_u=DL_{frame}	y_u=Ht/2	(ω_u)(y_u)	F_u	(F_u)(y_u)	ω_u(D/2)
		$\sum(\omega_x)(h_x)$	$\sum(F_u+F_5)$=0.7V	$M_{OT}=\sum(F)(y)$	$M_{RST}=\sum(\omega)(D/2)$

Design Shelf Loads:	
9" Shelf	= 15 lbs/shelf (Pharmacy)
12" Shelf	= 50 lbs/shelf
15"-16" Shelf	= 50 lbs/shelf (incl Apparel)
18"-20" Shelf	= 125 lbs/shelf
	= 50 lbs/shelf (Apparel)
24"+ Shelf	= 150 lbs/shelf
	= 100 lbs/shelf (End Cap)
	= 225 lbs/shelf (Grocery)
30" (HD TV) Shelf	= 75 lbs/shelf

No. of Shelf Levels / Fixture Height (Ht):
(4) Levels at Ht <= 48"
(5) Levels at 48" < Ht <= 90"
(7) Levels at Ht > 90"
(4) Levels at "24V" & "24X" (Full) = 69" & 81" (Top Shelf)
(4) Levels at HD TV = 96" (Top Shelf) (120" tall fixture)
(9) Levels at Pharmacy = 84" ("3RX" fixture)

Factor Of Safety against Overturning at Load Case #1 & #2, $FOS_{OT} = M_{RST}/M_{OT}$:

FOS_{OT} < 1.0; Anchor Bolts required for both Shear & Tension

FOS_{OT} >= 1.0; Anchor Bolts required for Shear only, no net uplift tension at base connection

FOS_{OT} >= 1.5; No Anchor Bolts required (Except for Half Gondola Frames per owner's requirements)

Anchorage Connection Design Load Combinations: RMI, section 2.2 - Strength Design

RMI LC #7: $(0.9-0.2S_{DS})DL + (0.9-0.2S_{DS})(0.67)PL - \Omega_o(EL)$, for Load Case #1 Shear, $R_{uh} = (\Omega_o)V/2$

$(0.9-0.2S_{DS})DL + (0.9-0.2S_{DS})PL - \Omega_o(EL)$, for Load Case #2 Tension, $R_{uv} = [(\Omega_o M_{OT}/0.7)-(0.9-0.2S_{DS})M_{RST}]/(FrameDepth)$

JOHNSTON BURKHOLDER ASSOCIATES consulting structural engineers	PROJECT NO: 2401802403	Sheet No: 4	Of: 66
	PROJECT NAME: #02403 - Puyallup, WA		
	MADE BY: KSH	DATE: 04/19/24	
	CHECKED BY:	DATE:	

Racking Anchorage Design - Frame Load Diagram

IBC 2021 / ASCE 7-16 / 2016 RMI (ANSI/MH16.3-16)

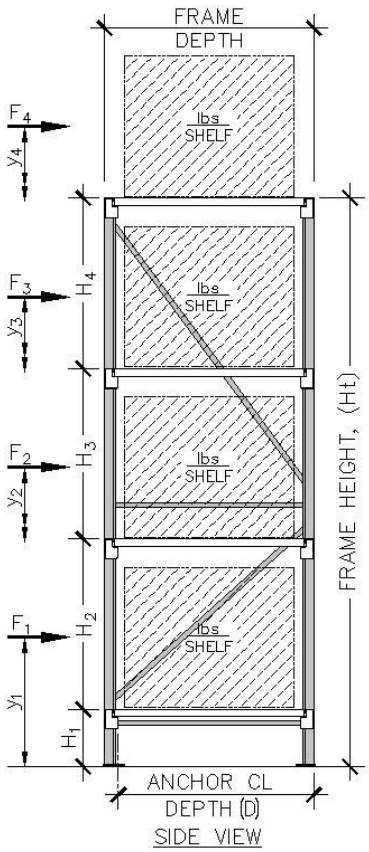

Base Shear, RMI, sect. 2.6.2:

$V = (C_s)(I_p)(W_s)$ C_sI_p, C_s based on frame height and I_p = 1.0 or 1.5 with Public Access

$W_s = (0.67(PL_{RF})(PL)) + DL$

PL_{RF} = 1.0 for Cross-Aisle and Down-Aisle frames

PL = (0.67)PL for RMI, sect. 2.6.9(1) & ASCE 7, 15.5.3.3.2(a)

(1.0)PL for RMI, sect. 2.6.9(2) & ASCE 7, 15.5.3.3.2(b)

Overturning Stability:

Center of Mass (CM) of Product Load (PL) is typically 20" above the shelf or (1/2)(Shelf height, H_i) when shelf height is < 40" (which is the assumed pallet height).

$F_{x = 1..n}$, is set at a Service Load level using $V= (0.7)[C_sI_pW_s]$

Load Case #1: (2/3)PL at each shelf level, RMI, sect.2.6.9(1) & ASCE 7, 15.5.3.3.2(a)

ω_x= (0.67)PL	$h_x = y_i$	(0.7V)(ω_x)(h_x)		Ovrturn'g Mom,M_{OT}	Resist'g Mom, M_{RST}
		(ω_x)(h_x)	$\sum\omega_xh_x$		
ω_4	y_4	(ω_4)(y_4)	F_{x4}	(F_{x4})(y_4)	ω_4(D/2)
ω_3	y_3	(ω_3)(y_3)	F_{x3}	(F_{x3})(y_3)	ω_3(D/2)
ω_2	y_2	(ω_2)(y_2)	F_{x2}	(F_{x2})(y_2)	ω_2(D/2)
ω_1	y_1	(ω_1)(y_1)	F_{x1}	(F_{x1})(y_1)	ω_1(D/2)
ω_u=DL_{frame}	y_u=Ht/2	(ω_u)(y_u)	F_{xu}	(F_{xu})(y_u)	ω_u(D/2)
		$\sum(\omega_x)(h_x)$	$\sum(F_{xu}+F_{xi})$=0.7V	$M_{OT}=\sum(F)(y)$	$M_{RST}=\sum(\omega)(D/2)$

Load Case #2: (1.0)PL at top shelf level only, RMI, sect.2.6.9(2) & ASCE 7, 15.5.3.3.2(b)

ω_x= (1.0)PL	$h_x = y_i$	(0.7V)(ω_x)(h_x)		Ovrturn'g Mom,M_{OT}	Resist'g Mom, M_{RST}
		(ω_x)(h_x)	$\sum\omega_xh_x$		
ω_4	y_4	(ω_4)(y_4)	F_{x4}	(F_{x4})(y_4)	ω_4(D/2)
ω_u=DL_{frame}	y_u=Ht/2	(ω_u)(y_u)	F_{xu}	(F_{xu})(y_u)	ω_u(D/2)
		$\sum(\omega_x)(h_x)$	$\sum(F_{xu}+F_{x4})$=0.7V	$M_{OT}=\sum(F)(y)$	$M_{RST}=\sum(\omega)(D/2)$

Factor Of Safety against Overturning at Load Case #1 & #2, $FOS_{OT} = M_{RST}/M_{OT}$:

FOS_{OT} < 1.0; Anchor Bolts required for both Shear & Tension

FOS_{OT} >= 1.0; Anchor Bolts required for Shear only, no net uplift tension at base connection

FOS_{OT} >= 1.5; Anchor Bolts required for Shear only for frames 96" tall and taller at sales floor area and for all frames taller than 48" in storage areas (non sales floor).

Anchorage Connection Design Load Combinations: RMI, section 2.2 - Strength Design

RMI LC #6: $(0.9-0.2S_{DS})DL + (0.9-0.2S_{DS})(0.67)PL - \Omega_o(EL)$, for Load Case #1 Shear, $R_{uh} = (\Omega_o)V/2$

$(0.9-0.2S_{DS})DL + (0.9-0.2S_{DS})PL - \Omega_o(EL)$, for Load Case #2 Tension, $R_{uv} = [(\Omega_oM_{OT}/0.7)-(0.9-0.2S_{DS})M_{RST}]/(FrameDepth)$

Rack Frame Member Design Load Combinations: RMI, section 2.2 - Strength Design

RMI LC #1: 1.4DL + 1.2PL Redundancy factor, ρ = 1.0 <- SDC "A"/"B"/"C", RMI, sect. 2.6.2.1

RMI LC #2: 1.2DL + 1.4PL 1.3 <- SDC "D"/"E"/"F", RMI, sect. 2.6.2.1

RMI LC #5: $(1.2+0.2S_{DS})DL + (0.85+0.2S_{DS})(0.67)\beta PL + \rho EL$, for Load Case #1 β = 0.7, RMI, sect. 2.1

$(1.2+0.2S_{DS})DL + (0.85+0.2S_{DS})\beta PL + \rho EL$, for Load Case #2

RMI LC #7: $(0.9-0.2S_{DS})DL + (0.9-0.2S_{DS})(0.67)PL - \rho EL$, for Load Case #1

$(0.9-0.2S_{DS})DL + (0.9-0.2S_{DS})PL - \rho EL$, for Load Case #2

Rack Framing Member Design: RMI, section 6.3

Per ANSI/MH16.1, Section 6.3, effective lengths may be determined by rational methods consistent with AISI or AISC. AISC Design by Second-Order Analysis, Section C2.2a is used. Notional loads are applied to gravity load cases and K=1.0 is used since the ratio of second-order drift to first-order drift (P-δ) / (P-Δ) < 1.1.

JOHNSTON BURKHOLDER ASSOCIATES
consulting structural engineers
930 CENTRAL · KANSAS CITY, MO 64105
816.421.4200 · WWW.JBAENGR.COM

PROJECT NO: 2401802403	SHEET NO: 5	OF: 66	
PROJECT NAME: #02403 - Puyallup, WA			
MADE BY: KSH	DATE: 04/19/24		
CHECKED BY:	DATE:		

Shelving / Single Sided — 48" Tall "R" 4 Level — 18R

IBC 2021 / ASCE 7-16 / 2016 RMI (ANSI/MH16.3-16)

Seismic Importance Factor =	1.5	
Supported on Elevated Floor (Y/N):	No	
Total Load per shelf =	125 lbs	
# of Levels =	Wall 4 Level	
Uniform Weight per level =	20.83 psf/shelf	
Weight of Unit =	100 lbs	
Anchorage spacing/Trib width =	4 ft	*(Frames are assumed to be 4'-0" oc)*
Shelf depth =	18 in	Shelf Load / Level
h_9 =	0 in	
h_8 =	0 in	
h_7 =	0 in	
h_6 =	0 in	
h_5 =	0 in	
h_4 =	14 in	125 lbs
h_3 =	14 in	125 lbs
h_2 =	14 in	125 lbs
h_1 =	6 in	125 lbs
Total Shelf Height, H_t =	48 in	
Unit Height, H_u =	48 in	
Unit Base Depth, D =	11 in	

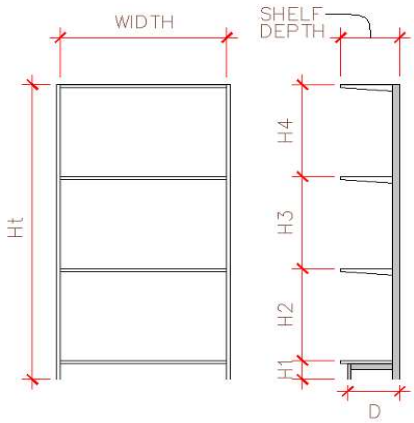

Overturning Stability (Load cases are per ASCE 7 sect. 15.5.3.6):

Load Case 1* [per RMI sect. 2.6.8(1) - PL=0.67(PL)]
[per RMI sect. 2.6.2, PL_{RF} = 1.0]

Seismic $(C_s)(I_p)$ =	0.315	W_s (Cross-Aisle)
$W_s = (0.67)(PL_{RF})((0.67)PL)+DL$ =	324.5 lbs	
Base Shear, $V = C_sI_pW_s$ =	102.3 lbs	
Horizontal forces per level, $F_x = C_{vx}V$ (RMI sect 2.6.6)		
(Service Loads, E = 0.7) F_9 =	0.0 lbs	@ 0 in (CM)
F_8 =	0.0 lbs	@ 0 in (CM)
F_7 =	0.0 lbs	@ 0 in (CM)
F_6 =	0.0 lbs	@ 0 in (CM)
F_5 =	0.0 lbs	@ 0 in (CM)
F_4 =	24.1 lbs	@ 54 in (CM)
F_3 =	17.8 lbs	@ 40 in (CM)
F_2 =	11.6 lbs	@ 26 in (CM)
F_1 =	5.4 lbs	@ 12 in (CM)
F_u =	12.8 lbs	@ 24 in (CM)
Σf_i =	102.3 lbs	(@ Factored Loads)
Calculate Overturning Moment (Service), $M_{OT} = \Sigma f_i h_i$		
M_{OT} =	2686 in-lbs	
Calculate Resisting Moment (Service), M_{RST}		
M_{RST} =	2383 in-lbs	
Factor of Safety		
FOS =	0.887	

Note: (CM) = Product Center of Mass typically 6 inches above the top of shelf at each level.

UPLIFT - ANCHORS REQUIRED

Load Case 2* [per RMI sect. 2.6.8(2) - PL=1.0(PL)]
[per RMI sect. 2.6.2, PL_{RF} = 1.0]

Seismic $(C_s)(I_p)$ =	0.315	W_s (Cross-Aisle)
$W_s = (0.67)(PL_{RF})((1)PL)+DL$ =	183.8 lbs	
Base Shear, $V = C_sI_pW_s$ =	58.0 lbs	
Horizontal forces per level, $F_x = C_{vx}V$ (RMI sect 2.6.6)		
(Service Loads) F_9 =	0.0 lbs	
F_8 =	0.0 lbs	
F_7 =	0.0 lbs	
F_6 =	0.0 lbs	
F_5 =	0.0 lbs	
F_4 =	29.9 lbs	@ 54in (CM)
F_3 =	0.0 lbs	
F_2 =	0.0 lbs	
F_1 =	0.0 lbs	
F_u =	10.6 lbs	@ 24in (CM)
Σf_i =	58.0 lbs	(@ Factored Loads)
Calculate Overturning Moment (Service), $M_{OT} = \Sigma f_i h_i$		
M_{OT} =	1871 in-lbs	
Calculate Resisting Moment (Service), M_{RST}		
M_{RST} =	1238 in-lbs	
Factor of Safety		
FOS =	0.661	

UPLIFT - ANCHORS REQUIRED

Base Reactions:

Reactions (Service Loads):	LC #1		LC #2	
R_h =	36 lbs		20 lbs	
R_v =	27 lbs	(Uplift)	58 lbs	(Uplift)
Overturning FOS =	0.887	< 1.5--ABs Reqd	0.661	<1.5--ABs Reqd
Sliding Restraint force, R_{RST} / FOS =	102lbs / 2.837 >= 1.5 OK		65lbs / 3.229 >= 1.5 OK	
Reactions (Factored Loads):	LC #1		LC #2	
Base Shear (R_{uh}) =	102 lbs		58 lbs	
Net Uplift (R_{uv}) =	539 lbs		404 lbs	
Overturning + Gravity (P_u) =	844 lbs		495 lbs	

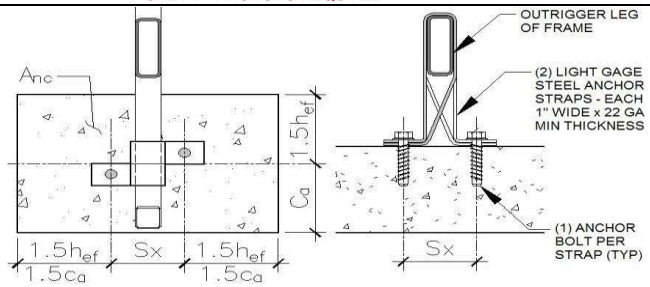

Anchor Design (using "Cracked Concrete" Properties)

Try: 3/8" DIA Hilti Kwik Bolt-TZ2 (CS) Anchor - 2 1/2" embed.

Embedment =	2.5 in	
f'_c =	3500 psi	
e_n' =	0 in	<--- Eccen. Of Anchor
h_{ef} =	2 in	$1.5(h_{ef})$ = 3.000 in
c_a =	3.5 in	$1.5(c_a)$ = 5.250 in
Conc. thickness, t =	4 in	
# of Anchors, n =	2	- anchors per connection
S_X =	2.5 in	
A_{se} =	0.051 in^2	

Tension Allowables

Steel Strength, ϕN_{sa} =	8437 lbs	<--ACI 318-14 Eq 17.4.1.2		
Concrete Breakout, $(0.75)\phi N_{cbq}$ =	2427 lbs	<--ACI 318-14 Eq 17.4.2.1b		
Pullout Strength, $(0.75)\phi N_{pn}$ =	NA	<--ACI 318-14 Eq 17.4.3.1		
	LC #1		LC #2	
Factored Tension Load (N_u) =	539 lbs		404 lbs	
max tension stress ratio (TSR) =	0.222	OK	0.166	OK

Shear Allowables

Steel Strength, ϕV_{sa} =	4062 lbs	<--ACI 318-14 Eq 17.5.1.2c		
Concrete breakout, ϕV_{cbq} =	1533 lbs	<--ACI 318-14 Eq 17.5.2.1b		
Concrete pryout, ϕV_{cpq} =	3485 lbs	<--ACI 318-14 Eq 17.5.3.1b		
	LC #1		LC #2	
Factored Shear Load (V_u) =	102 lbs		58 lbs	
Max shear stress ratio (VSR) =	0.067	OK	0.038	OK
Combined shear and tension stress ratio (TSR + VSR) =	0.289	< 1.2 OK - LC#1 (controls)		

USE: (2) 3/8" DIA Hilti Kwik Bolt-TZ2 (CS) Anchor - 2 1/2" embed. ICC REPORT #ESR-4266

JOHNSTON BURKHOLDER ASSOCIATES
consulting structural engineers
930 CENTRAL · KANSAS CITY, MO 64105
816.421.4200 · WWW.JBAENGR.COM

PROJECT NO: 2401802403	SHEET NO: 6	OF: 66
PROJECT NAME: #02403 - Puyallup, WA		
MADE BY: KSH	DATE: 04/19/24	
CHECKED BY:	DATE:	

Shelving / Single Sided 48" Tall "R" 4 Level 18R

IBC 2021 / ASCE 7-16 / 2016 RMI (ANSI/MH16.3-16)

Punching Shear Check:
(Design per ACI 318-14 section 14.5.5)

Max. Factored Vertical Load (P_u) =	844	lbs
Slab Concrete f'_c =	3500	psi
Slab thickness (t) =	4	in.
Rack Post X-X =	2	in.
Rack Post Y-Y =	2	in.
b_o =	24.00	in.
β =	1.00	
V_n =	22718	lbs Eq. (22-10)
V_n max =	15107	lbs Eq. (22-10)
ϕV_n =	9064.38	lbs
$V_u/\phi V_n$ =	0.093	< 1.0 O.K.

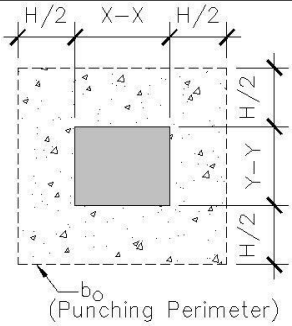

Slab tension based on Soil bearing area check:

Allowable soil bearing =	1500	psf
Max. Vertical Load (Service) (P) =	447	lbs
Area reqd. for bearing (A_{reqd}) =	0.30	ft^2
"b" distance =	6.55	in
Slab thickness (t) =	4.00	in
S = $(1")(t)^2/6$ =	2.67	in^3/in
ϕM_{nt} (tension allowable) = $\phi_t(7.5)[(f'_c)^{1/2}](S)$ =	710	in-lb/in
Factored uniform bearing, $w_u = P_u / A_{reqd}$ =	20	lb/in/in
$M_u = w_u L^2/3 = (w_u)[(b-(2"))/2)^2] / 3$ =	33.94	in-lb/in - Defl. End M1 = 17 in-lb/in
$M_u/\phi M_{nt}$ =	0.048	< 1.0 O.K.

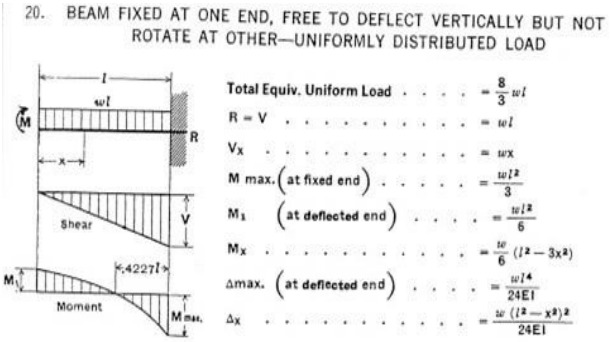

Shelving Fixture FOS Overturning with Resistance from Effective Weight of Slab on Grade:

Width of Single Rack =	11	in
Slab thickness (t) =	4.0	in
Modulus of Rupture, f_r = 7.5*SQRT(f'c) =	443.7	psi
Concrete Slab Section Modulus, S = $b(t)^2/6$ =	32.0	in^3/ft
Allowable Concrete Slab Bending Moment, $M_{all}/FS = S*f_r/1.5$ =	1183.2	ft*lbs/ft
Effective Cantilever Span Length (L_c) at M_{all} =	6.9	ft
Total Length of Slab (l_c + Width of Single Rack) =	7.8	ft
Trib. Width of Slab = Trib width of Rack =	4.0	ft
Weight of Concrete Slab at Rack (P_{conc}) =	1559	lbs
Resisting Moment - Concrete Slab at Rack, $M_{RST(slab)} = P_{conc} * L_c/2$ =	72938	in*lbs
Load Combination #1: M_{OT} =	2686	in*lbs
$M_{RST(Rack)} + M_{RST(slab)}$ =	75321	in*lbs
Total Overturning FOS =	28.046	OK
Load Combination #2: M_{OT} =	1871	in*lbs
$M_{RST(Rack)} + M_{RST(slab)}$ =	74175	in*lbs
Total Overturning FOS =	39.638	OK

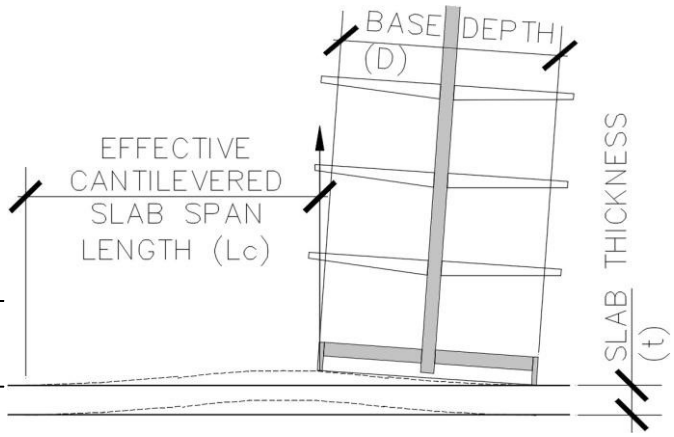

JOHNSTON BURKHOLDER ASSOCIATES
consulting structural engineers
930 CENTRAL · KANSAS CITY, MO 64105
816.421.4200 · WWW.JBAENGR.COM

PROJECT NO: 2401802403		SHEET NO: 7	OF: 66
PROJECT NAME: #02403 - Puyallup, WA			
MADE BY: KSH		DATE: 04/19/24	
CHECKED BY:		DATE:	

Shelving / Single Sided | 54" Tall "S" 5 Level | 18S

IBC 2021 / ASCE 7-16 / 2016 RMI (ANSI/MH16.3-16)

Seismic Importance Factor =	1.5	
Supported on Elevated Floor (Y/N):	No	
Total Load per shelf =	125 lbs	
# of Levels =	Wall 5 Level	
Uniform Weight per level =	20.83 psf/shelf	
Weight of Unit =	100 lbs	
Anchorage spacing/Trib width =	4 ft	*(Frames are assumed to be 4'-0" oc)*
Shelf depth =	18 in	Shelf Load / Level
h_9 =	0 in	
h_8 =	0 in	
h_7 =	0 in	
h_6 =	0 in	
h_5 =	12 in	125 lbs
h_4 =	12 in	125 lbs
h_3 =	12 in	125 lbs
h_2 =	12 in	125 lbs
h_1 =	6 in	125 lbs
Total Shelf Height, H_t =	54 in	
Unit Height, H_u =	54 in	
Unit Base Depth, D =	11 in	

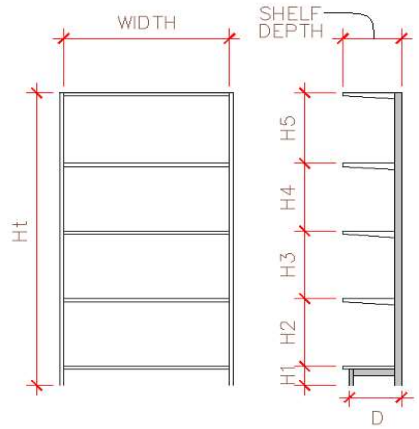

Overturning Stability (Load cases are per ASCE 7 sect. 15.5.3.6):

Load Case 1* [per RMI sect. 2.6.8(1) - PL=0.67(PL)]
[per RMI sect. 2.6.2, PL_{RF} = 1.0]

Seismic $(C_s)(I_p)$ =	0.315	W_s (Cross-Aisle)
$W_s = (0.67)(PL_{RF})((0.67)PL)+DL$ =	380.6 lbs	
Base Shear, $V = C_s I_p W_s$ =	120.0 lbs	
Horizontal forces per level, $F_x = C_{vx}V$ (RMI sect 2.6.6)		
(Service Loads, E = 0.7) F_9 =	0.0 lbs	@ 0 in (CM)
F_8 =	0.0 lbs	@ 0 in (CM)
F_7 =	0.0 lbs	@ 0 in (CM)
F_6 =	0.0 lbs	@ 0 in (CM)
F_5 =	23.8 lbs	@ 60 in (CM)
F_4 =	19.0 lbs	@ 48 in (CM)
F_3 =	14.3 lbs	@ 36 in (CM)
F_2 =	9.5 lbs	@ 24 in (CM)
F_1 =	4.8 lbs	@ 12 in (CM)
F_u =	12.8 lbs	@ 27 in (CM)
Σf_i =	120.0 lbs	(@ Factored Loads)
Calculate Overturning Moment (Service), $M_{OT} = \Sigma f_i h_i$		
M_{OT} =	3480 in-lbs	
Calculate Resisting Moment (Service), M_{RST}		
M_{RST} =	2842 in-lbs	
Factor of Safety		
FOS =	0.817	

Note: (CM) = Product Center of Mass typically 6 inches above the top of shelf at each level.

UPLIFT - ANCHORS REQUIRED

Load Case 2* [per RMI sect. 2.6.8(2) - PL=1.0(PL)]
[per RMI sect. 2.6.2, PL_{RF} = 1.0]

Seismic $(C_s)(I_p)$ =	0.315	W_s (Cross-Aisle)
$W_s = (0.67)(PL_{RF})((1)PL)+DL$ =	183.8 lbs	
Base Shear, $V = C_s I_p W_s$ =	58.0 lbs	
Horizontal forces per level, $F_x = C_{vx}V$ (RMI sect 2.6.6)		
(Service Loads) F_9 =	0.0 lbs	
F_8 =	0.0 lbs	
F_7 =	0.0 lbs	
F_6 =	0.0 lbs	
F_5 =	29.8 lbs	@ 60in (CM)
F_4 =	0.0 lbs	
F_3 =	0.0 lbs	
F_2 =	0.0 lbs	
F_1 =	0.0 lbs	
F_u =	10.7 lbs	@ 27in (CM)
Σf_i =	58.0 lbs	(@ Factored Loads)
Calculate Overturning Moment (Service), $M_{OT} = \Sigma f_i h_i$		
M_{OT} =	2080 in-lbs	
Calculate Resisting Moment (Service), M_{RST}		
M_{RST} =	1238 in-lbs	
Factor of Safety		
FOS =	0.595	

UPLIFT - ANCHORS REQUIRED

Base Reactions:

Reactions (Service Loads):	LC #1		LC #2	
R_h =	42 lbs		20 lbs	
R_v =	58 lbs	(Uplift)	77 lbs	(Uplift)
Overturning FOS =	0.817	< 1.5--ABs Reqd	0.595	<1.5--ABs Reqd
Sliding Restraint force, R_{RST} / FOS =	127lbs / 3.015 >= 1.5 OK		70lbs / 3.463 >= 1.5 OK	
Reactions (Factored Loads):	LC #1		LC #2	
Base Shear (R_{uh}) =	120 lbs		58 lbs	
Net Uplift (R_{uv}) =	715 lbs		458 lbs	
Overturning + Gravity (P_u) =	1061 lbs		535 lbs	

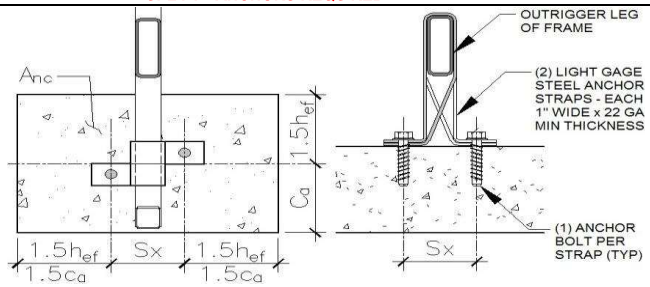

Anchor Design (using "Cracked Concrete" Properties)

Try: 3/8" DIA Hilti Kwik Bolt-TZ2 (CS) Anchor - 2 1/2" embed.

Embedment =	2.5 in	
f'_c =	3500 psi	
e_h' =	0 in	<--- Eccen. Of Anchor
h_{ef} =	2 in	$1.5(h_{ef})$ = 3.000 in
c_a =	3.5 in	$1.5(c_a)$ = 5.250 in
Conc. thickness, t =	4 in	
# of Anchors, n =	2	- anchors per connection
S_X =	2.5 in	
A_{se} =	0.051 in^2	

Tension Allowables

Steel Strength, ϕN_{sa} =	8437 lbs	<--ACI 318-14 Eq 17.4.1.2		
Concrete Breakout, $(0.75)\phi N_{cbq}$ =	2427 lbs	<--ACI 318-14 Eq 17.4.2.1b		
Pullout Strength, $(0.75)\phi N_{pn}$ =	NA	<--ACI 318-14 Eq 17.4.3.1		
	LC #1		LC #2	
Factored Tension Load (N_u) =	715 lbs		458 lbs	
max tension stress ratio (TSR) =	0.295	OK	0.189	OK

Shear Allowables

Steel Strength, ϕV_{sa} =	4062 lbs	<--ACI 318-14 Eq 17.5.1.2c		
Concrete breakout, ϕV_{cbq} =	1533 lbs	<--ACI 318-14 Eq 17.5.2.1b		
Concrete pryout, ϕV_{cpq} =	3485 lbs	<--ACI 318-14 Eq 17.5.3.1b		
	LC #1		LC #2	
Factored Shear Load (V_u) =	120 lbs		58 lbs	
Max shear stress ratio (VSR) =	0.078	OK	0.038	OK
Combined shear and tension stress ratio (TSR + VSR) =	0.373	< 1.2 OK - LC#1 (controls)		

USE: (2) 3/8" DIA Hilti Kwik Bolt-TZ2 (CS) Anchor - 2 1/2" embed. ICC REPORT #ESR-4266

JOHNSTON BURKHOLDER ASSOCIATES
consulting structural engineers
930 CENTRAL · KANSAS CITY, MO 64105
816.421.4200 · WWW.JBAENGR.COM

PROJECT NO:	SHEET NO:	OF:
2401802403	8	66
PROJECT NAME: #02403 - Puyallup, WA		
MADE BY: KSH	DATE: 04/19/24	
CHECKED BY:	DATE:	

Shelving / Single Sided 54" Tall "S" 5 Level 18S

IBC 2021 / ASCE 7-16 / 2016 RMI (ANSI/MH16.3-16)

Punching Shear Check:
(Design per ACI 318-14 section 14.5.5)

Max. Factored Vertical Load (P_u) =	1061	lbs
Slab Concrete f'_c =	3500	psi
Slab thickness (t) =	4	in.
Rack Post X-X =	2	in.
Rack Post Y-Y =	2	in.
b_o =	24.00	in.
β =	1.00	
V_n =	22718	lbs Eq. (22-10)
V_n max =	15107	lbs Eq. (22-10)
ϕV_n =	9064.38	lbs
$V_u/\phi V_n$ =	0.117	< 1.0 O.K.

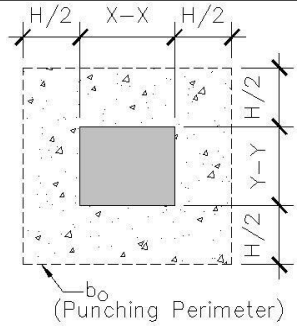

Slab tension based on Soil bearing area check:

Allowable soil bearing =	1500	psf
Max. Vertical Load (Service) (P) =	554	lbs
Area reqd. for bearing (A_{reqd}) =	0.37	ft^2
"b" distance =	7.29	in
Slab thickness (t) =	4.00	in
S = (1")$(t)^2$/6 =	2.67	in^3/in
ϕM_{nt} (tension allowable) = $\phi_t(7.5)[(f'_c)^{1/2}](S)$ =	710	in-lb/in
Factored uniform bearing, $w_u = P_u / A_{reqd}$ =	20	lb/in/in
$M_u = w_u L^2/3 = (w_u)[(b-(2"))/2)^2] / 3$ =	46.57	in-lb/in - Defl. End M1 = 24 in-lb/in
$M_u/\phi M_{nt}$ =	0.066	< 1.0 O.K.

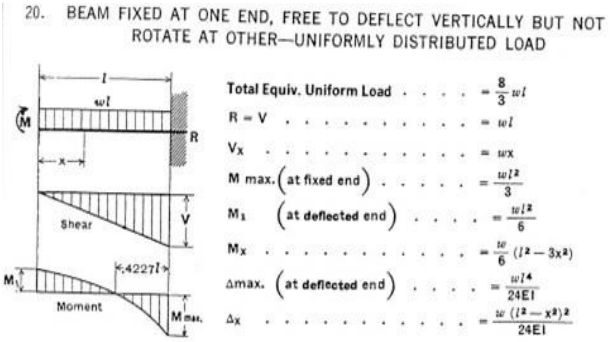

Shelving Fixture FOS Overturning with Resistance from Effective Weight of Slab on Grade:

Width of Single Rack =	11	in
Slab thickness (t) =	4.0	in
Modulus of Rupture, f_r = 7.5*SQRT(f'c) =	443.7	psi
Concrete Slab Section Modulus, S = $b(t)^2/6$ =	32.0	in^3/ft
Allowable Concrete Slab Bending Moment, $M_{all}/FS = S*f_r/1.5$ =	1183.2	ft*lbs/ft
Effective Cantilever Span Length (L_c) at M_{all} =	6.9	ft
Total Length of Slab (l_c + Width of Single Rack) =	7.8	ft
Trib. Width of Slab = Trib width of Rack =	4.0	ft
Weight of Concrete Slab at Rack (P_{conc}) =	1559	lbs
Resisting Moment - Concrete Slab at Rack, $M_{RST(slab)} = P_{conc} * L_c/2$ =	72938	in*lbs
Load Combination #1: M_{OT} =	3480	in*lbs
$M_{RST(Rack)} + M_{RST(slab)}$ =	75779	in*lbs
Total Overturning FOS =	21.778	OK
Load Combination #2: M_{OT} =	2080	in*lbs
$M_{RST(Rack)} + M_{RST(slab)}$ =	74175	in*lbs
Total Overturning FOS =	35.669	OK

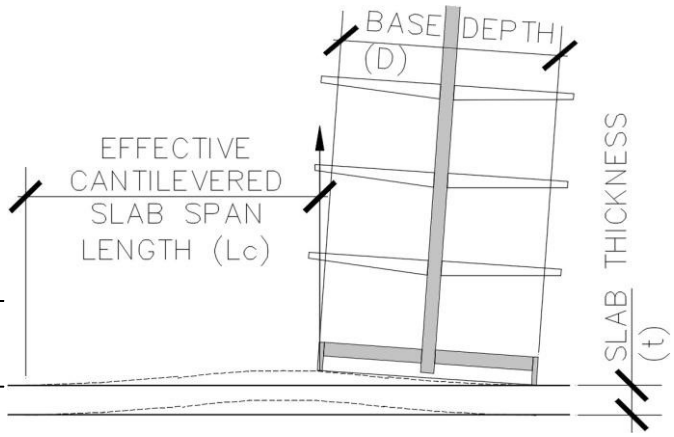

JOHNSTON BURKHOLDER ASSOCIATES
consulting structural engineers
930 CENTRAL · KANSAS CITY, MO 64105
816.421.4200 · WWW.JBAENGR.COM

PROJECT NO: 2401802403		SHEET NO: 9	OF: 66
PROJECT NAME: #02403 - Puyallup, WA			
MADE BY: KSH		DATE: 04/19/24	
CHECKED BY:		DATE:	

Shelving / Single Sided | 60" Tall "T" 5 Level | 18T

IBC 2021 / ASCE 7-16 / 2016 RMI (ANSI/MH16.3-16)

Seismic Importance Factor =	1.5	
Supported on Elevated Floor (Y/N):	No	
Total Load per shelf =	125 lbs	
# of Levels =	Wall 5 Level	
Uniform Weight per level =	20.83 psf/shelf	
Weight of Unit =	100 lbs	
Anchorage spacing/Trib width =	4 ft	*(Frames are assumed to be 4'-0" oc)*
Shelf depth =	18 in	Shelf Load / Level
h_9 =	0 in	
h_8 =	0 in	
h_7 =	0 in	
h_6 =	0 in	
h_5 =	13.5 in	125 lbs
h_4 =	13.5 in	125 lbs
h_3 =	13.5 in	125 lbs
h_2 =	13.5 in	125 lbs
h_1 =	6 in	125 lbs
Total Shelf Height, H_t =	60 in	
Unit Height, H_u =	60 in	
Unit Base Depth, D =	11 in	

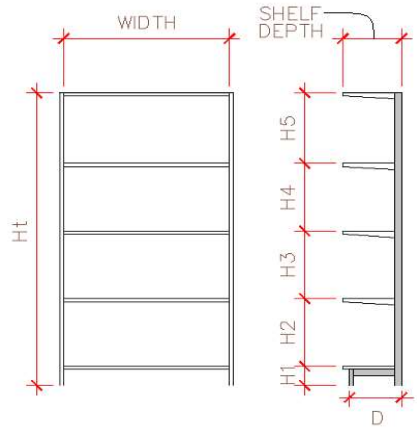

Overturning Stability (Load cases are per ASCE 7 sect. 15.5.3.6):

Load Case 1* [per RMI sect. 2.6.8(1) - PL=0.67(PL)]
[per RMI sect. 2.6.2, PL_{RF} = 1.0]

Seismic $(C_s)(I_p)$ =	0.315	W_s (Cross-Aisle)
$W_s = (0.67)(PL_{RF})((0.67)PL)+DL$ =	380.6 lbs	
Base Shear, $V = C_sI_pW_s$ =	120.0 lbs	
Horizontal forces per level, $F_x = C_{vx}V$ (RMI sect 2.6.6)		
(Service Loads, E = 0.7) F_9 =	0.0 lbs	@ 0 in (CM)
F_8 =	0.0 lbs	@ 0 in (CM)
F_7 =	0.0 lbs	@ 0 in (CM)
F_6 =	0.0 lbs	@ 0 in (CM)
F_5 =	24.0 lbs	@ 66 in (CM)
F_4 =	19.1 lbs	@ 52.5 in (CM)
F_3 =	14.2 lbs	@ 39 in (CM)
F_2 =	9.3 lbs	@ 25.5 in (CM)
F_1 =	4.4 lbs	@ 12 in (CM)
F_u =	13.0 lbs	@ 30 in (CM)
Σf_i =	120.0 lbs	(@ Factored Loads)
Calculate Overturning Moment (Service), $M_{OT} = \Sigma f_i h_i$		
M_{OT} =	3823 in-lbs	
Calculate Resisting Moment (Service), M_{RST}		
M_{RST} =	2842 in-lbs	
Factor of Safety		
FOS =	0.743	

Note:
(CM) = Product Center of Mass typically 6 inches above the top of shelf at each level.

UPLIFT - ANCHORS REQUIRED

Load Case 2* [per RMI sect. 2.6.8(2) - PL=1.0(PL)]
[per RMI sect. 2.6.2, PL_{RF} = 1.0]

Seismic $(C_s)(I_p)$ =	0.315	W_s (Cross-Aisle)
$W_s = (0.67)(PL_{RF})((1)PL)+DL$ =	183.8 lbs	
Base Shear, $V = C_sI_pW_s$ =	58.0 lbs	
Horizontal forces per level, $F_x = C_{vx}V$ (RMI sect 2.6.6)		
(Service Loads) F_9 =	0.0 lbs	
F_8 =	0.0 lbs	
F_7 =	0.0 lbs	
F_6 =	0.0 lbs	
F_5 =	29.7 lbs	@ 66in (CM)
F_4 =	0.0 lbs	
F_3 =	0.0 lbs	
F_2 =	0.0 lbs	
F_1 =	0.0 lbs	
F_u =	10.8 lbs	@ 30in (CM)
Σf_i =	58.0 lbs	(@ Factored Loads)
Calculate Overturning Moment (Service), $M_{OT} = \Sigma f_i h_i$		
M_{OT} =	2288 in-lbs	
Calculate Resisting Moment (Service), M_{RST}		
M_{RST} =	1238 in-lbs	
Factor of Safety		
FOS =	0.541	

UPLIFT - ANCHORS REQUIRED

Base Reactions:

Reactions (Service Loads):	LC #1		LC #2	
R_h =	42 lbs		20 lbs	
R_v =	89 lbs	(Uplift)	95 lbs	(Uplift)
Overturning FOS =	0.743	< 1.5--ABs Reqd	0.541	<1.5--ABs Reqd
Sliding Restraint force, R_{RST} / FOS =	134lbs / 3.201 >= 1.5 OK		75lbs / 3.696 >= 1.5 OK	
Reactions (Factored Loads):	**LC #1**		**LC #2**	
Base Shear (R_{uh}) =	120 lbs		58 lbs	
Net Uplift (R_{uv}) =	804 lbs		512 lbs	
Overturning + Gravity (P_u) =	1128 lbs		576 lbs	

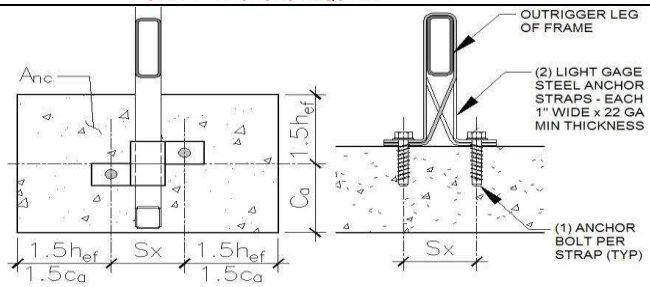

Anchor Design (using "Cracked Concrete" Properties)

Try:	3/8" DIA Hilti Kwik Bolt-TZ2 (CS) Anchor - 2 1/2" embed.	
Embedment =	2.5 in	
f'_c =	3500 psi	
e_h' =	0 in	<--- Eccen. Of Anchor
h_{ef} =	2 in	$1.5(h_{ef})$ = 3.000 in
c_a =	3.5 in	$1.5(c_a)$ = 5.250 in
Conc. thickness, t =	4 in	
# of Anchors, n =	2	- anchors per connection
S_X =	2.5 in	
A_{se} =	0.051 in^2	

Tension Allowables

Steel Strength, ϕN_{sa} =	8437 lbs	<--ACI 318-14 Eq 17.4.1.2		
Concrete Breakout, $(0.75)\phi N_{cbq}$ =	2427 lbs	<--ACI 318-14 Eq 17.4.2.1b		
Pullout Strength, $(0.75)\phi N_{pn}$ =	NA	<--ACI 318-14 Eq 17.4.3.1		
	LC #1		LC #2	
Factored Tension Load (N_u) =	804 lbs		512 lbs	
max tension stress ratio (TSR) =	0.331	OK	0.211	OK

Shear Allowables

Steel Strength, ϕV_{sa} =	4062 lbs	<--ACI 318-14 Eq 17.5.1.2c		
Concrete breakout, ϕV_{cbq} =	1533 lbs	<--ACI 318-14 Eq 17.5.2.1b		
Concrete pryout, ϕV_{cpq} =	3485 lbs	<--ACI 318-14 Eq 17.5.3.1b		
	LC #1		LC #2	
Factored Shear Load (V_u) =	120 lbs		58 lbs	
Max shear stress ratio (VSR) =	0.078	OK	0.038	OK
Combined shear and tension stress ratio (TSR + VSR) =	0.410	< 1.2 OK - LC#1 (controls)		

USE: (2) 3/8" DIA Hilti Kwik Bolt-TZ2 (CS) Anchor - 2 1/2" embed. ICC REPORT #ESR-4266

JOHNSTON BURKHOLDER ASSOCIATES
consulting structural engineers
930 CENTRAL · KANSAS CITY, MO 64105
816.421.4200 · WWW.JBAENGR.COM

PROJECT NO: 2401802403	SHEET NO: 10	OF: 66
PROJECT NAME: #02403 - Puyallup, WA		
MADE BY: KSH	DATE: 04/19/24	
CHECKED BY:	DATE:	

Shelving / Single Sided 60" Tall "T" 5 Level 18T

IBC 2021 / ASCE 7-16 / 2016 RMI (ANSI/MH16.3-16)

Punching Shear Check:
(Design per ACI 318-14 section 14.5.5)

Max. Factored Vertical Load (P_u) =	1128	lbs
Slab Concrete f '$_c$ =	3500	psi
Slab thickness (t) =	4	in.
Rack Post X-X =	2	in.
Rack Post Y-Y =	2	in.
b_o =	24.00	in.
β =	1.00	
V_n =	22718	lbs Eq. (22-10)
V_n max =	15107	lbs Eq. (22-10)
ϕV_n =	9064.38	lbs
$V_u/\phi V_n$ =	0.124	< 1.0 O.K.

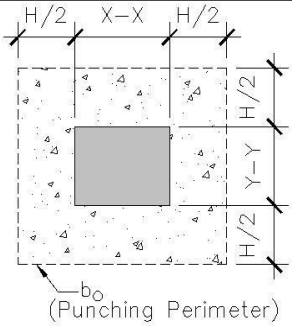

Slab tension based on Soil bearing area check:

Allowable soil bearing =	1500	psf
Max. Vertical Load (Service) (P) =	577	lbs
Area reqd. for bearing (A_{reqd}) =	0.38	ft^2
"b" distance =	7.44	in
Slab thickness (t) =	4.00	in
S = (1")(t)^2/6 =	2.67	in^3/in
ϕM_{nt} (tension allowable) = $\phi_t(7.5)[(f'_c)^{1/2}](S)$ =	710	in-lb/in
Factored uniform bearing, $w_u = P_u / A_{reqd}$ =	20	lb/in/in
$M_u = w_u L^2/3 = (w_u)[(b-(2''))/2)^2] / 3$ =	50.27	in-lb/in - Defl. End M1 = 26 in-lb/in
$M_u/\phi M_{nt}$ =	0.071	< 1.0 O.K.

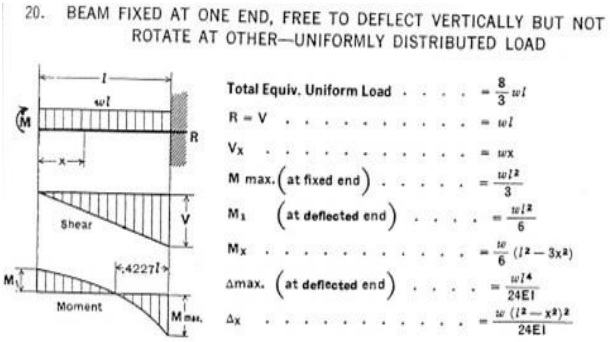

Shelving Fixture FOS Overturning with Resistance from Effective Weight of Slab on Grade:

Width of Single Rack =	11	in
Slab thickness (t) =	4.0	in
Modulus of Rupture, f_r = 7.5*SQRT(f'c) =	443.7	psi
Concrete Slab Section Modulus, S = b(t)^2/6 =	32.0	in^3/ft
Allowable Concrete Slab Bending Moment, $M_{all}/FS = S*f_r/1.5$ =	1183.2	ft*lbs/ft
Effective Cantilever Span Length (L_c) at M_{all} =	6.9	ft
Total Length of Slab (l_c + Width of Single Rack) =	7.8	ft
Trib. Width of Slab = Trib width of Rack =	4.0	ft
Weight of Concrete Slab at Rack (P_{conc}) =	1559	lbs
Resisting Moment - Concrete Slab at Rack, $M_{RST(slab)} = P_{conc} * L_c/2$ =	72938	in*lbs
Load Combination #1: M_{OT} =	3823	in*lbs
$M_{RST(Rack)} + M_{RST(slab)}$ =	75779	in*lbs
Total Overturning FOS =	19.824	OK
Load Combination #2: M_{OT} =	2288	in*lbs
$M_{RST(Rack)} + M_{RST(slab)}$ =	74175	in*lbs
Total Overturning FOS =	32.421	OK

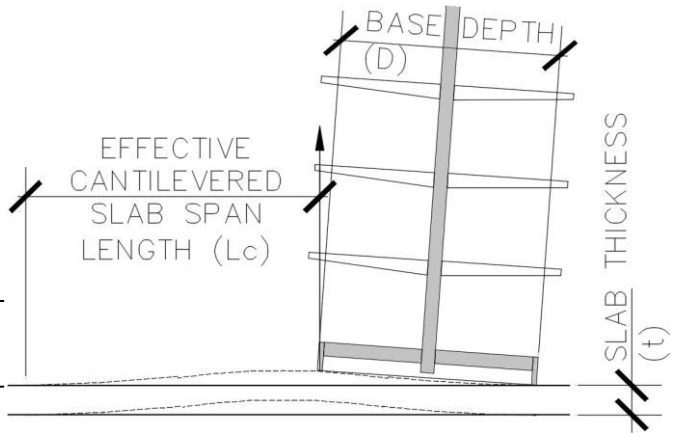

JOHNSTON BURKHOLDER ASSOCIATES
consulting structural engineers
930 CENTRAL · KANSAS CITY, MO 64105
816.421.4200 · WWW.JBAENGR.COM

PROJECT NO: 2401802403	SHEET NO: 11	OF: 66	
PROJECT NAME: #02403 - Puyallup, WA			
MADE BY: KSH	DATE: 04/19/24		
CHECKED BY:	DATE:		

Shelving / Single Sided | 78" Tall "V" 5 Level | 18V

IBC 2021 / ASCE 7-16 / 2016 RMI (ANSI/MH16.3-16)

Seismic Importance Factor =	1.5		
Supported on Elevated Floor (Y/N):	No		
Total Load per shelf =	125 lbs		
# of Levels =	Wall 5 Level		
Uniform Weight per level =	20.83 psf/shelf		
Weight of Unit =	100 lbs		
Anchorage spacing/Trib width =	4 ft	(*Frames are assumed to be 4'-0" oc*)	
Shelf depth =	18 in		Shelf Load / Level
h_9 =	0 in		
h_8 =	0 in		
h_7 =	0 in		
h_6 =	0 in		
h_5 =	18 in		125 lbs
h_4 =	18 in		125 lbs
h_3 =	18 in		125 lbs
h_2 =	18 in		125 lbs
h_1 =	6 in		125 lbs
Total Shelf Height, H_t =	78 in		
Unit Height, H_u =	78 in		
Unit Base Depth, D =	11 in		

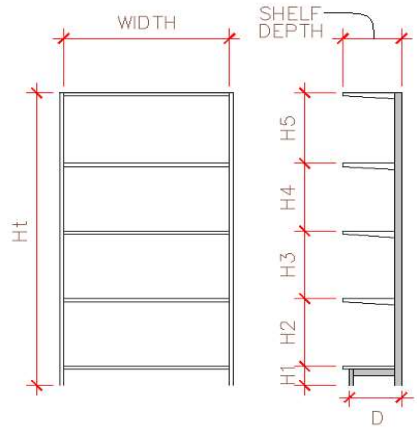

Overturning Stability (Load cases are per ASCE 7 sect. 15.5.3.6):

Load Case 1* [per RMI sect. 2.6.8(1) - PL=0.67(PL)]
[per RMI sect. 2.6.2, PL_{RF} = 1.0]

Seismic $(C_s)(I_p)$ =	0.315	W_s (Cross-Aisle)
$W_s = (0.67)(PL_{RF})((0.67)PL)+DL$ =	380.6 lbs	
Base Shear, $V = C_s I_p W_s$ =	120.0 lbs	
Horizontal forces per level, $F_x = C_{vx}V$ (RMI sect 2.6.6)		
(Service Loads, E = 0.7) F_9 =	0.0 lbs	@ 0 in (CM)
F_8 =	0.0 lbs	@ 0 in (CM)
F_7 =	0.0 lbs	@ 0 in (CM)
F_6 =	0.0 lbs	@ 0 in (CM)
F_5 =	24.6 lbs	@ 84 in (CM)
F_4 =	19.3 lbs	@ 66 in (CM)
F_3 =	14.1 lbs	@ 48 in (CM)
F_2 =	8.8 lbs	@ 30 in (CM)
F_1 =	3.5 lbs	@ 12 in (CM)
F_u =	13.7 lbs	@ 39 in (CM)
Σf_i =	120.0 lbs	(@ Factored Loads)
Calculate Overturning Moment (Service), $M_{OT} = \Sigma f_i h_i$		
M_{OT} =	4860 in-lbs	
Calculate Resisting Moment (Service), M_{RST}		
M_{RST} =	2842 in-lbs	
Factor of Safety		
FOS =	0.585	

Note: (CM) = Product Center of Mass typically 6 inches above the top of shelf at each level.

UPLIFT - ANCHORS REQUIRED

Load Case 2* [per RMI sect. 2.6.8(2) - PL=1.0(PL)]
[per RMI sect. 2.6.2, PL_{RF} = 1.0]

Seismic $(C_s)(I_p)$ =	0.315	W_s (Cross-Aisle)
$W_s = (0.67)(PL_{RF})((1)PL)+DL$ =	183.8 lbs	
Base Shear, $V = C_s I_p W_s$ =	58.0 lbs	
Horizontal forces per level, $F_x = C_{vx}V$ (RMI sect 2.6.6)		
(Service Loads) F_9 =	0.0 lbs	
F_8 =	0.0 lbs	
F_7 =	0.0 lbs	
F_6 =	0.0 lbs	
F_5 =	29.6 lbs	@ 84in (CM)
F_4 =	0.0 lbs	
F_3 =	0.0 lbs	
F_2 =	0.0 lbs	
F_1 =	0.0 lbs	
F_u =	11.0 lbs	@ 39in (CM)
Σf_i =	58.0 lbs	(@ Factored Loads)
Calculate Overturning Moment (Service), $M_{OT} = \Sigma f_i h_i$		
M_{OT} =	2913 in-lbs	
Calculate Resisting Moment (Service), M_{RST}		
M_{RST} =	1238 in-lbs	
Factor of Safety		
FOS =	0.425	

UPLIFT - ANCHORS REQUIRED

Base Reactions:

Reactions (Service Loads):	LC #1		LC #2	
R_h =	42 lbs		20 lbs	
R_v =	183 lbs	(Uplift)	152 lbs	(Uplift)
Overturning FOS =	0.585	< 1.5--ABs Reqd	0.425	<1.5--ABs Reqd
Sliding Restraint force, R_{RST} / FOS =	158lbs / 3.762 >= 1.5 OK		89lbs / 4.397 >= 1.5 OK	
Reactions (Factored Loads):	LC #1		LC #2	
Base Shear (R_{uh}) =	120 lbs		58 lbs	
Net Uplift (R_{uv}) =	1073 lbs		674 lbs	
Overturning + Gravity (P_u) =	1329 lbs		697 lbs	

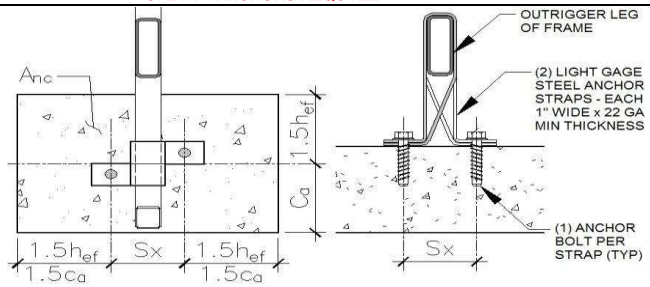

Anchor Design (using "Cracked Concrete" Properties)

Try: 3/8" DIA Hilti Kwik Bolt-TZ2 (CS) Anchor - 2 1/2" embed.

Embedment =	2.5 in		
f'_c =	3500 psi		
e_h' =	0 in	<--- Eccen. Of Anchor	
h_{ef} =	2 in	$1.5(h_{ef})$ =	3.000 in
c_a =	3.5 in	$1.5(c_a)$ =	5.250 in
Conc. thickness, t =	4 in		
# of Anchors, n =	2	- anchors per connection	
S_X =	2.5 in		
A_{se} =	0.051 in^2		

Tension Allowables

Steel Strength, ϕN_{sa} =	8437 lbs	<--ACI 318-14 Eq 17.4.1.2		
Concrete Breakout, $(0.75)\phi N_{cbq}$ =	2427 lbs	<--ACI 318-14 Eq 17.4.2.1b		
Pullout Strength, $(0.75)\phi N_{pn}$ =	NA	<--ACI 318-14 Eq 17.4.3.1		
	LC #1		LC #2	
Factored Tension Load (N_u) =	1073 lbs		674 lbs	
max tension stress ratio (TSR) =	0.442	OK	0.278	OK

Shear Allowables

Steel Strength, ϕV_{sa} =	4062 lbs	<--ACI 318-14 Eq 17.5.1.2c		
Concrete breakout, ϕV_{cbq} =	1533 lbs	<--ACI 318-14 Eq 17.5.2.1b		
Concrete pryout, ϕV_{cpq} =	3485 lbs	<--ACI 318-14 Eq 17.5.3.1b		
	LC #1		LC #2	
Factored Shear Load (V_u) =	120 lbs		58 lbs	
Max shear stress ratio (VSR) =	0.078	OK	0.038	OK
Combined shear and tension stress ratio (TSR + VSR) =	0.521	< 1.2 OK - LC#1 (controls)		

USE: (2) 3/8" DIA Hilti Kwik Bolt-TZ2 (CS) Anchor - 2 1/2" embed. ICC REPORT #ESR-4266

JOHNSTON BURKHOLDER ASSOCIATES
consulting structural engineers
930 CENTRAL · KANSAS CITY, MO 64105
816.421.4200 · WWW.JBAENGR.COM

PROJECT NO:	SHEET NO:	OF:
2401802403	12	66
PROJECT NAME: #02403 - Puyallup, WA		
MADE BY: KSH	DATE: 04/19/24	
CHECKED BY:	DATE:	

Shelving / Single Sided 78" Tall "V" 5 Level 18V

IBC 2021 / ASCE 7-16 / 2016 RMI (ANSI/MH16.3-16)

Punching Shear Check:
(Design per ACI 318-14 section 14.5.5)

Max. Factored Vertical Load (P_u) =	1329	lbs
Slab Concrete f '$_c$ =	3500	psi
Slab thickness (t) =	4	in.
Rack Post X-X =	2	in.
Rack Post Y-Y =	2	in.
b_o =	24.00	in.
β =	1.00	
V_n =	22718	lbs Eq. (22-10)
V_n max =	15107	lbs Eq. (22-10)
ϕV_n =	9064.38	lbs
$V_u/\phi V_n$ =	0.147	< 1.0 O.K.

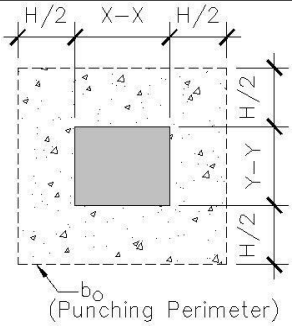

Slab tension based on Soil bearing area check:

Allowable soil bearing =	1500	psf
Max. Vertical Load (Service) (P) =	648	lbs
Area reqd. for bearing (A_{reqd}) =	0.43	ft^2
"b" distance =	7.89	in
Slab thickness (t) =	4.00	in
S = (1")(t)^2/6 =	2.67	in^3/in
ϕM_{nt} (tension allowable) = $\phi_t(7.5)[(f'_c)^{1/2}](S)$ =	710	in-lb/in
Factored uniform bearing, $w_u = P_u / A_{reqd}$ =	21	lb/in/in
$M_u = w_u L^2/3 = (w_u)[(b-(2''))/2)^2] / 3$ =	61.70	in-lb/in - Defl. End M1 = 31 in-lb/in
$M_u/\phi M_{nt}$ =	0.087	< 1.0 O.K.

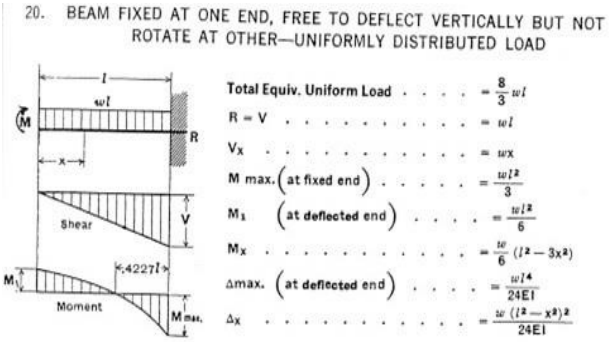

Shelving Fixture FOS Overturning with Resistance from Effective Weight of Slab on Grade:

Width of Single Rack =	11	in
Slab thickness (t) =	4.0	in
Modulus of Rupture, f_r = 7.5*SQRT(f'c) =	443.7	psi
Concrete Slab Section Modulus, S = b(t)^2/6 =	32.0	in^3/ft
Allowable Concrete Slab Bending Moment, $M_{all}/FS = S*f_r/1.5$ =	1183.2	ft*lbs/ft
Effective Cantilever Span Length (L_c) at M_{all} =	6.9	ft
Total Length of Slab (l_c + Width of Single Rack) =	7.8	ft
Trib. Width of Slab = Trib width of Rack =	4.0	ft
Weight of Concrete Slab at Rack (P_{conc}) =	1559	lbs
Resisting Moment - Concrete Slab at Rack, $M_{RST(slab)} = P_{conc} * L_c/2$ =	72938	in*lbs
Load Combination #1: M_{OT} =	4860	in*lbs
$M_{RST(Rack)} + M_{RST(slab)}$ =	75779	in*lbs
Total Overturning FOS =	15.594	OK
Load Combination #2: M_{OT} =	2913	in*lbs
$M_{RST(Rack)} + M_{RST(slab)}$ =	74175	in*lbs
Total Overturning FOS =	25.463	OK

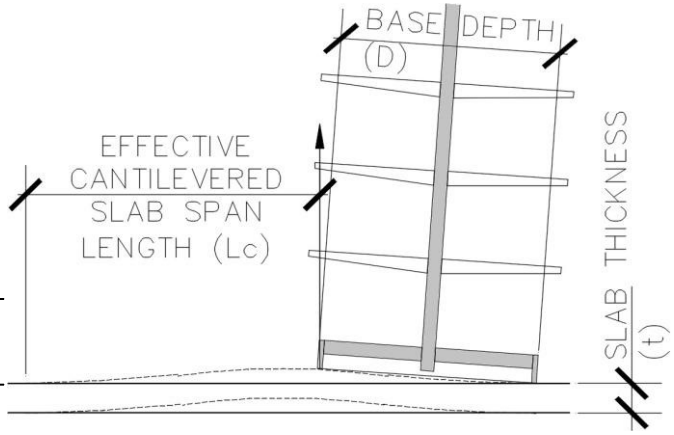

JOHNSTON BURKHOLDER ASSOCIATES
consulting structural engineers
930 CENTRAL · KANSAS CITY, MO 64105
816.421.4200 · WWW.JBAENGR.COM

PROJECT NO: 2401802403	SHEET NO: 13	OF: 66
PROJECT NAME: #02403 - Puyallup, WA		
MADE BY: KSH	DATE: 04/19/24	
CHECKED BY:	DATE:	

Shelving / Single Sided | 60" Tall "T" 5 Level | 24T

IBC 2021 / ASCE 7-16 / 2016 RMI (ANSI/MH16.3-16)

Seismic Importance Factor =	1.5	
Supported on Elevated Floor (Y/N):	No	
Total Load per shelf =	150 lbs	
# of Levels =	Wall 5 Level	
Uniform Weight per level =	18.75 psf/shelf	
Weight of Unit =	100 lbs	
Anchorage spacing/Trib width =	4 ft	*(Frames are assumed to be 4'-0" oc)*
Shelf depth =	24 in	Shelf Load / Level
h_9 =	0 in	
h_8 =	0 in	
h_7 =	0 in	
h_6 =	0 in	
h_5 =	13.5 in	150 lbs
h_4 =	13.5 in	150 lbs
h_3 =	13.5 in	150 lbs
h_2 =	13.5 in	150 lbs
h_1 =	6 in	150 lbs
Total Shelf Height, H_t =	60 in	
Unit Height, H_u =	60 in	
Unit Base Depth, D =	15 in	

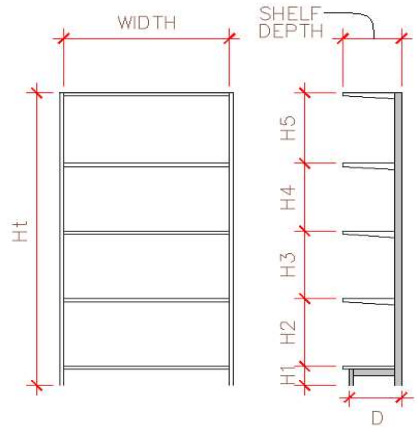

Overturning Stability (Load cases are per ASCE 7 sect. 15.5.3.6):

Load Case 1* [per RMI sect. 2.6.8(1) - PL=0.67(PL)]
[per RMI sect. 2.6.2, PL_{RF} = 1.0]

Seismic $(C_s)(I_p)$ =	0.315	W_s (Cross-Aisle)
$W_s = (0.67)(PL_{RF})((0.67)PL)+DL$ =	436.7 lbs	
Base Shear, $V = C_s I_p W_s$ =	137.7 lbs	
Horizontal forces per level, $F_x = C_{vx}V$ (RMI sect 2.6.6)		
(Service Loads, E = 0.7) F_9 =	0.0 lbs	@ 0 in (CM)
F_8 =	0.0 lbs	@ 0 in (CM)
F_7 =	0.0 lbs	@ 0 in (CM)
F_6 =	0.0 lbs	@ 0 in (CM)
F_5 =	28.3 lbs	@ 66 in (CM)
F_4 =	22.5 lbs	@ 52.5 in (CM)
F_3 =	16.7 lbs	@ 39 in (CM)
F_2 =	10.9 lbs	@ 25.5 in (CM)
F_1 =	5.1 lbs	@ 12 in (CM)
F_u =	12.8 lbs	@ 30 in (CM)
Σf_i =	137.7 lbs	(@ Factored Loads)
Calculate Overturning Moment (Service), $M_{OT} = \Sigma f_i h_i$		
M_{OT} =	4426 in-lbs	
Calculate Resisting Moment (Service), M_{RST}		
M_{RST} =	4500 in-lbs	
Factor of Safety		
FOS =	1.017	

Note: (CM) = Product Center of Mass typically 6 inches above the top of shelf at each level.

NO UPLIFT - ANCHORS REQUIRED

Load Case 2* [per RMI sect. 2.6.8(2) - PL=1.0(PL)]
[per RMI sect. 2.6.2, PL_{RF} = 1.0]

Seismic $(C_s)(I_p)$ =	0.315	W_s (Cross-Aisle)
$W_s = (0.67)(PL_{RF})((1)PL)+DL$ =	200.5 lbs	
Base Shear, $V = C_s I_p W_s$ =	63.2 lbs	
Horizontal forces per level, $F_x = C_{vx}V$ (RMI sect 2.6.6)		
(Service Loads) F_9 =	0.0 lbs	
F_8 =	0.0 lbs	
F_7 =	0.0 lbs	
F_6 =	0.0 lbs	
F_5 =	34.0 lbs	@ 66in (CM)
F_4 =	0.0 lbs	
F_3 =	0.0 lbs	
F_2 =	0.0 lbs	
F_1 =	0.0 lbs	
F_u =	10.3 lbs	@ 30in (CM)
Σf_i =	63.2 lbs	(@ Factored Loads)
Calculate Overturning Moment (Service), $M_{OT} = \Sigma f_i h_i$		
M_{OT} =	2551 in-lbs	
Calculate Resisting Moment (Service), M_{RST}		
M_{RST} =	1875 in-lbs	
Factor of Safety		
FOS =	0.735	

UPLIFT - ANCHORS REQUIRED

Base Reactions:

Reactions (Service Loads):	LC #1		LC #2	
R_h =	48 lbs		22 lbs	
R_v =	0 lbs	(No Uplift)	45 lbs	(Uplift)
Overturning FOS =	1.017	< 1.5--ABs Reqd	0.735	<1.5--ABs Reqd
Sliding Restraint force, R_{RST} / FOS =	128lbs / 2.663 >= 1.5 OK		68lbs / 3.053 >= 1.5 OK	
Reactions (Factored Loads):	LC #1		LC #2	
Base Shear (R_{uh}) =	138 lbs		63 lbs	
Net Uplift (R_{uv}) =	0 lbs		394 lbs	
Overturning + Gravity (P_u) =	1079 lbs		507 lbs	

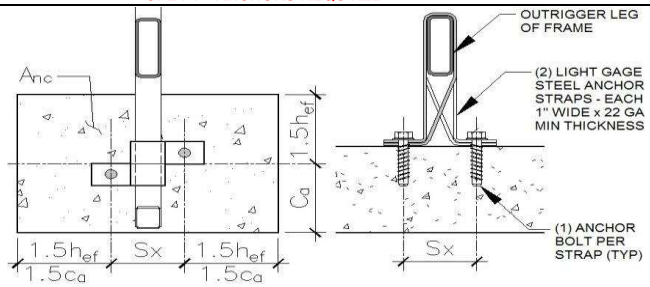

Anchor Design (using "Cracked Concrete" Properties)

Try:	3/8" DIA Hilti Kwik Bolt-TZ2 (CS) Anchor - 2 1/2" embed.	
Embedment =	2.5 in	
f'_c =	3500 psi	
e_h' =	0 in	<--- Eccen. Of Anchor
h_{ef} =	2 in	$1.5(h_{ef})$ = 3.000 in
c_a =	3.5 in	$1.5(c_a)$ = 5.250 in
Conc. thickness, t =	4 in	
# of Anchors, n =	2	- anchors per connection
S_X =	2.5 in	
A_{se} =	0.051 in^2	

Tension Allowables

Steel Strength, ϕN_{sa} =	8437 lbs	<--ACI 318-14 Eq 17.4.1.2
Concrete Breakout, $(0.75)\phi N_{cbq}$ =	2427 lbs	<--ACI 318-14 Eq 17.4.2.1b
Pullout Strength, $(0.75)\phi N_{pn}$ =	NA	<--ACI 318-14 Eq 17.4.3.1

	LC #1		LC #2	
Factored Tension Load (N_u) =	0 lbs		394 lbs	
max tension stress ratio (TSR) =	0.000	OK	0.163	OK

Shear Allowables

Steel Strength, ϕV_{sa} =	4062 lbs	<--ACI 318-14 Eq 17.5.1.2c
Concrete breakout, ϕV_{cbq} =	1533 lbs	<--ACI 318-14 Eq 17.5.2.1b
Concrete pryout, ϕV_{cpq} =	3485 lbs	<--ACI 318-14 Eq 17.5.3.1b

	LC #1		LC #2	
Factored Shear Load (V_u) =	138 lbs		63 lbs	
Max shear stress ratio (VSR) =	0.090	OK	0.041	OK
Combined shear and tension stress ratio (TSR + VSR) =	0.204	< 1.2 OK - LC#2 (controls)		

USE: (2) 3/8" DIA Hilti Kwik Bolt-TZ2 (CS) Anchor - 2 1/2" embed. ICC REPORT #ESR-4266

JOHNSTON BURKHOLDER ASSOCIATES
consulting structural engineers
930 CENTRAL · KANSAS CITY, MO 64105
816.421.4200 · WWW.JBAENGR.COM

PROJECT NO:	SHEET NO:	OF:
2401802403	14	66
PROJECT NAME: #02403 - Puyallup, WA		
MADE BY: KSH	DATE: 04/19/24	
CHECKED BY:	DATE:	

Shelving / Single Sided 60" Tall "T" 5 Level 24T

IBC 2021 / ASCE 7-16 / 2016 RMI (ANSI/MH16.3-16)

Punching Shear Check:
(Design per ACI 318-14 section 14.5.5)

Max. Factored Vertical Load (P_u) =	1079	lbs
Slab Concrete f'_c =	3500	psi
Slab thickness (t) =	4	in.
Rack Post X-X =	2	in.
Rack Post Y-Y =	2	in.
b_o =	24.00	in.
β =	1.00	
V_n =	22718	lbs Eq. (22-10)
V_n max =	15107	lbs Eq. (22-10)
ϕV_n =	9064.38	lbs
$V_u/\phi V_n$ =	0.119	< 1.0 O.K.

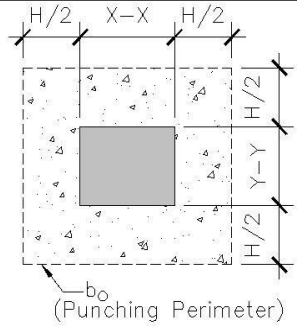

Slab tension based on Soil bearing area check:

Allowable soil bearing =	1500	psf
Max. Vertical Load (Service) (P) =	590	lbs
Area reqd. for bearing (A_{reqd}) =	0.39	ft^2
"b" distance =	7.53	in
Slab thickness (t) =	4.00	in
S = (1")$(t)^2$/6 =	2.67	in^3/in
ϕM_{nt} (tension allowable) = $\phi_t(7.5)[(f'_c)^{1/2}](S)$ =	710	in-lb/in
Factored uniform bearing, $w_u = P_u / A_{reqd}$ =	19	lb/in/in
$M_u = w_u L^2/3 = (w_u)[(b-(2"))/2)^2] / 3$ =	48.48	in-lb/in - Defl. End M1 = 25 in-lb/in
$M_u/\phi M_{nt}$ =	0.068	< 1.0 O.K.

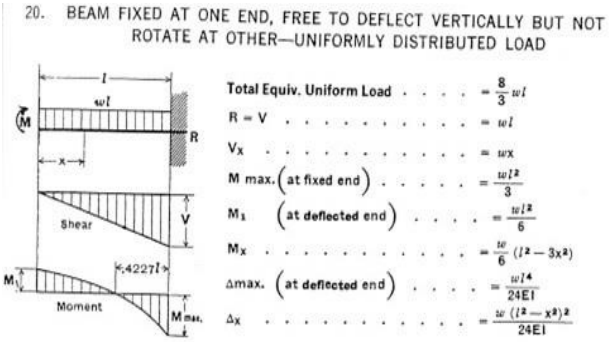

Shelving Fixture FOS Overturning with Resistance from Effective Weight of Slab on Grade:

Width of Single Rack =	15	in
Slab thickness (t) =	4.0	in
Modulus of Rupture, f_r = 7.5*SQRT(f'c) =	443.7	psi
Concrete Slab Section Modulus, S = $b(t)^2/6$ =	32.0	in^3/ft
Allowable Concrete Slab Bending Moment, $M_{all}/FS = S*f_r/1.5$ =	1183.2	ft*lbs/ft
Effective Cantilever Span Length (L_c) at M_{all} =	6.9	ft
Total Length of Slab (l_c + Width of Single Rack) =	8.1	ft
Trib. Width of Slab = Trib width of Rack =	4.0	ft
Weight of Concrete Slab at Rack (P_{conc}) =	1626	lbs
Resisting Moment - Concrete Slab at Rack, $M_{RST(slab)} = P_{conc} * L_c/2$ =	79308	in*lbs
Load Combination #1: M_{OT} =	4426	in*lbs
$M_{RST(Rack)} + M_{RST(slab)}$ =	83808	in*lbs
Total Overturning FOS =	18.936	OK
Load Combination #2: M_{OT} =	2551	in*lbs
$M_{RST(Rack)} + M_{RST(slab)}$ =	81183	in*lbs
Total Overturning FOS =	31.827	OK

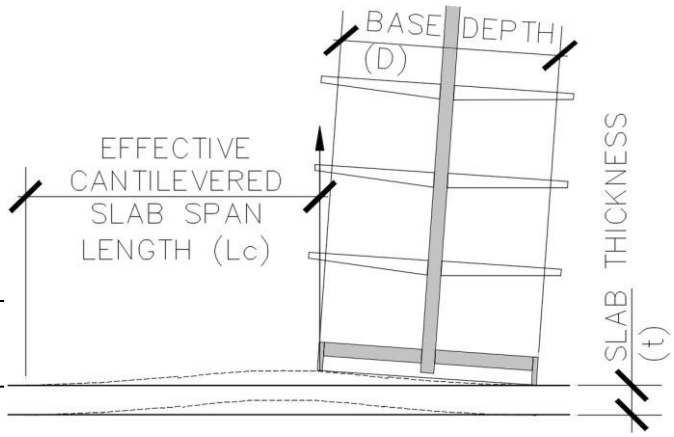

JOHNSTON BURKHOLDER ASSOCIATES
consulting structural engineers
930 CENTRAL · KANSAS CITY, MO 64105
816.421.4200 · WWW.JBAENGR.COM

PROJECT NO: 2401802403	SHEET NO: 15	OF: 66	
PROJECT NAME: #02403 - Puyallup, WA			
MADE BY: KSH	DATE: 04/19/24		
CHECKED BY:	DATE:		

Shelving / Single Sided | 66" Tall "U" 5 Level | 24U

IBC 2021 / ASCE 7-16 / 2016 RMI (ANSI/MH16.3-16)

Seismic Importance Factor =	1.5		
Supported on Elevated Floor (Y/N):	No		
Total Load per shelf =	150 lbs		
# of Levels =	Wall 5 Level		
Uniform Weight per level =	18.75 psf/shelf		
Weight of Unit =	100 lbs		
Anchorage spacing/Trib width =	4 ft	(*Frames are assumed to be 4'-0" oc*)	
Shelf depth =	24 in		Shelf Load / Level
h_9 =	0 in		
h_8 =	0 in		
h_7 =	0 in		
h_6 =	0 in		
h_5 =	15 in		150 lbs
h_4 =	15 in		150 lbs
h_3 =	15 in		150 lbs
h_2 =	15 in		150 lbs
h_1 =	6 in		150 lbs
Total Shelf Height, H_t =	66 in		
Unit Height, H_u =	66 in		
Unit Base Depth, D =	15 in		

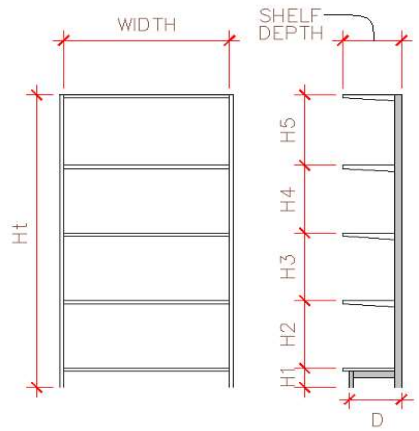

Overturning Stability (Load cases are per ASCE 7 sect. 15.5.3.6):

Load Case 1* [per RMI sect. 2.6.8(1) - PL=0.67(PL)]
[per RMI sect. 2.6.2, PL_{RF} = 1.0]

Seismic $(C_s)(I_p)$ =	0.315	W_s (Cross-Aisle)
$W_s = (0.67)(PL_{RF})((0.67)PL)+DL$ =	436.7 lbs	
Base Shear, $V = C_s I_p W_s$ =	137.7 lbs	
Horizontal forces per level, $F_x = C_{vx}V$ (RMI sect 2.6.6)		
(Service Loads, E = 0.7) F_9 =	0.0 lbs	@ 0 in (CM)
F_8 =	0.0 lbs	@ 0 in (CM)
F_7 =	0.0 lbs	@ 0 in (CM)
F_6 =	0.0 lbs	@ 0 in (CM)
F_5 =	28.6 lbs	@ 72 in (CM)
F_4 =	22.6 lbs	@ 57 in (CM)
F_3 =	16.7 lbs	@ 42 in (CM)
F_2 =	10.7 lbs	@ 27 in (CM)
F_1 =	4.8 lbs	@ 12 in (CM)
F_u =	13.0 lbs	@ 33 in (CM)
Σf_i =	137.7 lbs	(@ Factored Loads)
Calculate Overturning Moment (Service), $M_{OT} = \Sigma f_i h_i$		
M_{OT} =	4825 in-lbs	
Calculate Resisting Moment (Service), M_{RST}		
M_{RST} =	4500 in-lbs	
Factor of Safety		
FOS =	0.933	

Note: (CM) = Product Center of Mass typically 6 inches above the top of shelf at each level.

UPLIFT - ANCHORS REQUIRED

Load Case 2* [per RMI sect. 2.6.8(2) - PL=1.0(PL)]
[per RMI sect. 2.6.2, PL_{RF} = 1.0]

Seismic $(C_s)(I_p)$ =	0.315	W_s (Cross-Aisle)
$W_s = (0.67)(PL_{RF})((1)PL)+DL$ =	200.5 lbs	
Base Shear, $V = C_s I_p W_s$ =	63.2 lbs	
Horizontal forces per level, $F_x = C_{vx}V$ (RMI sect 2.6.6)		
(Service Loads) F_9 =	0.0 lbs	
F_8 =	0.0 lbs	
F_7 =	0.0 lbs	
F_6 =	0.0 lbs	
F_5 =	33.9 lbs	@ 72in (CM)
F_4 =	0.0 lbs	
F_3 =	0.0 lbs	
F_2 =	0.0 lbs	
F_1 =	0.0 lbs	
F_u =	10.4 lbs	@ 33in (CM)
Σf_i =	63.2 lbs	(@ Factored Loads)
Calculate Overturning Moment (Service), $M_{OT} = \Sigma f_i h_i$		
M_{OT} =	2783 in-lbs	
Calculate Resisting Moment (Service), M_{RST}		
M_{RST} =	1875 in-lbs	
Factor of Safety		
FOS =	0.674	

UPLIFT - ANCHORS REQUIRED

Base Reactions:

Reactions (Service Loads):	LC #1		LC #2	
R_h =	48 lbs		22 lbs	
R_v =	22 lbs	(Uplift)	61 lbs	(Uplift)
Overturning FOS =	0.933	< 1.5--ABs Reqd	0.674	<1.5--ABs Reqd
Sliding Restraint force, R_{RST} / FOS =	135lbs / 2.801 >= 1.5 OK		71lbs / 3.228 >= 1.5 OK	
Reactions (Factored Loads):	LC #1		LC #2	
Base Shear (R_{uh}) =	138 lbs		63 lbs	
Net Uplift (R_{uv}) =	699 lbs		439 lbs	
Overturning + Gravity (P_u) =	1136 lbs		540 lbs	

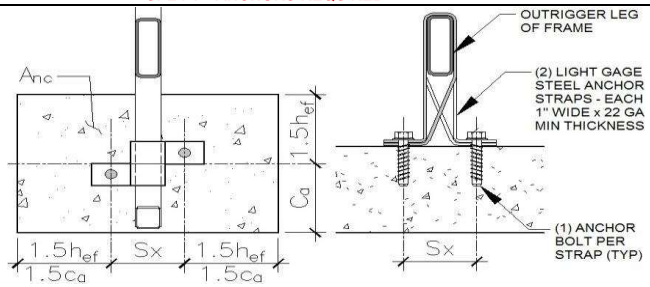

Anchor Design (using "Cracked Concrete" Properties)

Try: 3/8" DIA Hilti Kwik Bolt-TZ2 (CS) Anchor - 2 1/2" embed.

Embedment =	2.5 in		
f'_c =	3500 psi		
e_n' =	0 in	<--- Eccen. Of Anchor	
h_{ef} =	2 in	$1.5(h_{ef})$ =	3.000 in
c_a =	3.5 in	$1.5(c_a)$ =	5.250 in
Conc. thickness, t =	4 in		
# of Anchors, n =	2	- anchors per connection	
S_X =	2.5 in		
A_{se} =	0.051 in^2		

Tension Allowables

Steel Strength, ϕN_{sa} =	8437 lbs	<--ACI 318-14 Eq 17.4.1.2		
Concrete Breakout, $(0.75)\phi N_{cbq}$ =	2427 lbs	<--ACI 318-14 Eq 17.4.2.1b		
Pullout Strength, $(0.75)\phi N_{pn}$ =	NA	<--ACI 318-14 Eq 17.4.3.1		
	LC #1		LC #2	
Factored Tension Load (N_u) =	699 lbs		439 lbs	
max tension stress ratio (TSR) =	0.288	OK	0.181	OK

Shear Allowables

Steel Strength, ϕV_{sa} =	4062 lbs	<--ACI 318-14 Eq 17.5.1.2c		
Concrete breakout, ϕV_{cbq} =	1533 lbs	<--ACI 318-14 Eq 17.5.2.1b		
Concrete pryout, ϕV_{cpq} =	3485 lbs	<--ACI 318-14 Eq 17.5.3.1b		
	LC #1		LC #2	
Factored Shear Load (V_u) =	138 lbs		63 lbs	
Max shear stress ratio (VSR) =	0.090	OK	0.041	OK
Combined shear and tension stress ratio (TSR + VSR) =	0.378	< 1.2 OK - LC#1 (controls)		

USE: (2) 3/8" DIA Hilti Kwik Bolt-TZ2 (CS) Anchor - 2 1/2" embed. ICC REPORT #ESR-4266

JOHNSTON BURKHOLDER ASSOCIATES
consulting structural engineers
930 CENTRAL · KANSAS CITY, MO 64105
816.421.4200 · WWW.JBAENGR.COM

PROJECT NO:	SHEET NO:	OF:
2401802403	16	66
PROJECT NAME: #02403 - Puyallup, WA		
MADE BY: KSH	DATE: 04/19/24	
CHECKED BY:	DATE:	

Shelving / Single Sided 66" Tall "U" 5 Level 24U

IBC 2021 / ASCE 7-16 / 2016 RMI (ANSI/MH16.3-16)

Punching Shear Check:
(Design per ACI 318-14 section 14.5.5)

Max. Factored Vertical Load (P_u) =	1136	lbs
Slab Concrete f '$_c$ =	3500	psi
Slab thickness (t) =	4	in.
Rack Post X-X =	2	in.
Rack Post Y-Y =	2	in.
b_o =	24.00	in.
β =	1.00	
V_n =	22718	lbs Eq. (22-10)
V_n max =	15107	lbs Eq. (22-10)
ϕV_n =	9064.38	lbs
$V_u/\phi V_n$ =	0.125	< 1.0 O.K.

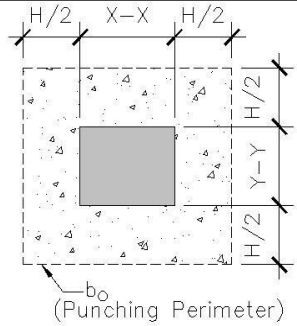

Slab tension based on Soil bearing area check:

Allowable soil bearing =	1500	psf
Max. Vertical Load (Service) (P) =	610	lbs
Area reqd. for bearing (A_{reqd}) =	0.41	ft^2
"b" distance =	7.65	in
Slab thickness (t) =	4.00	in
S = (1")$(t)^2$/6 =	2.67	in^3/in
ϕM_{nt} (tension allowable) = $\phi_t(7.5)[(f'_c)^{1/2}](S)$ =	710	in-lb/in
Factored uniform bearing, $w_u = P_u / A_{reqd}$ =	19	lb/in/in
$M_u = w_u L^2/3 = (w_u)[(b-(2''))/2)^2] / 3$ =	51.65	in-lb/in - Defl. End M1 = 26 in-lb/in
$M_u/\phi M_{nt}$ =	0.073	< 1.0 O.K.

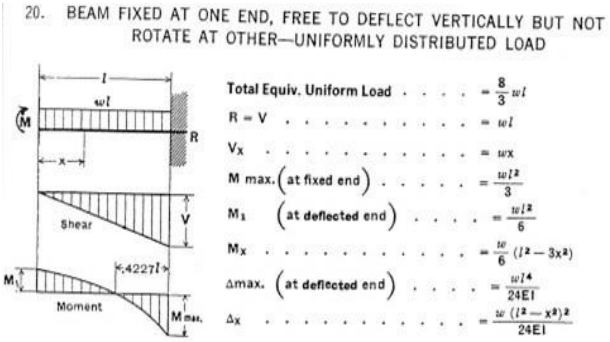

Shelving Fixture FOS Overturning with Resistance from Effective Weight of Slab on Grade:

Width of Single Rack =	15	in
Slab thickness (t) =	4.0	in
Modulus of Rupture, f_r = 7.5*SQRT(f'c) =	443.7	psi
Concrete Slab Section Modulus, S = $b(t)^2$/6 =	32.0	in^3/ft
Allowable Concrete Slab Bending Moment, $M_{all}/FS = S*f_r/1.5$ =	1183.2	ft*lbs/ft
Effective Cantilever Span Length (L_c) at M_{all} =	6.9	ft
Total Length of Slab (l_c + Width of Single Rack) =	8.1	ft
Trib. Width of Slab = Trib width of Rack =	4.0	ft
Weight of Concrete Slab at Rack (P_{conc}) =	1626	lbs
Resisting Moment - Concrete Slab at Rack, $M_{RST(slab)} = P_{conc} * L_c/2$ =	79308	in*lbs
Load Combination #1: M_{OT} =	4825	in*lbs
$M_{RST(Rack)} + M_{RST(slab)}$ =	83808	in*lbs
Total Overturning FOS =	17.370	OK
Load Combination #2: M_{OT} =	2783	in*lbs
$M_{RST(Rack)} + M_{RST(slab)}$ =	81183	in*lbs
Total Overturning FOS =	29.172	OK

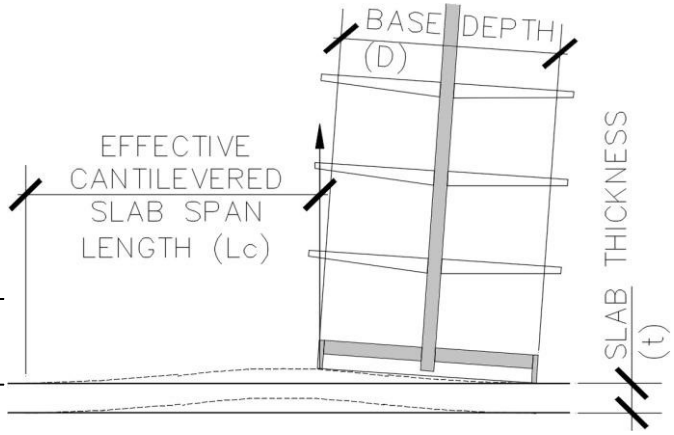

JOHNSTON BURKHOLDER ASSOCIATES
consulting structural engineers
930 CENTRAL · KANSAS CITY, MO 64105
816.421.4200 · WWW.JBAENGR.COM

PROJECT NO: 2401802403	SHEET NO: 17	OF: 66	
PROJECT NAME: #02403 - Puyallup, WA			
MADE BY: KSH	DATE: 04/19/24		
CHECKED BY:	DATE:		

Shelving / Single Sided | 78" Tall "V" 5 Level | 24V

IBC 2021 / ASCE 7-16 / 2016 RMI (ANSI/MH16.3-16)

Seismic Importance Factor =	1.5		
Supported on Elevated Floor (Y/N):	No		
Total Load per shelf =	150 lbs		
# of Levels =	Wall 5 Level		
Uniform Weight per level =	18.75 psf/shelf		
Weight of Unit =	100 lbs		
Anchorage spacing/Trib width =	4 ft	(*Frames are assumed to be 4'-0" oc*)	
Shelf depth =	24 in		Shelf Load / Level
h_9 =	0 in		
h_8 =	0 in		
h_7 =	0 in		
h_6 =	0 in		
h_5 =	18 in		150 lbs
h_4 =	18 in		150 lbs
h_3 =	18 in		150 lbs
h_2 =	18 in		150 lbs
h_1 =	6 in		150 lbs
Total Shelf Height, H_t =	78 in		
Unit Height, H_u =	78 in		
Unit Base Depth, D =	15 in		

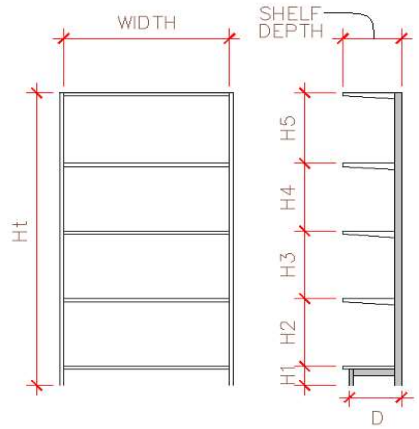

Overturning Stability (Load cases are per ASCE 7 sect. 15.5.3.6):

Load Case 1* [per RMI sect. 2.6.8(1) - PL=0.67(PL)]
[per RMI sect. 2.6.2, PL_{RF} = 1.0]

Seismic $(C_s)(I_p)$ =	0.315	W_s (Cross-Aisle)
$W_s = (0.67)(PL_{RF})((0.67)PL)+DL$ =	436.7 lbs	
Base Shear, $V = C_s I_p W_s$ =	137.7 lbs	
Horizontal forces per level, $F_x = C_{vx}V$ (RMI sect 2.6.6)		
(Service Loads, E = 0.7) F_9 =	0.0 lbs	@ 0 in (CM)
F_8 =	0.0 lbs	@ 0 in (CM)
F_7 =	0.0 lbs	@ 0 in (CM)
F_6 =	0.0 lbs	@ 0 in (CM)
F_5 =	29.0 lbs	@ 84 in (CM)
F_4 =	22.8 lbs	@ 66 in (CM)
F_3 =	16.6 lbs	@ 48 in (CM)
F_2 =	10.4 lbs	@ 30 in (CM)
F_1 =	4.1 lbs	@ 12 in (CM)
F_u =	13.4 lbs	@ 39 in (CM)
Σf_i =	137.7 lbs	(@ Factored Loads)
Calculate Overturning Moment (Service), $M_{OT} = \Sigma f_i h_i$		
M_{OT} =	5627 in-lbs	
Calculate Resisting Moment (Service), M_{RST}		
M_{RST} =	4500 in-lbs	
Factor of Safety		
FOS =	0.800	

Note: (CM) = Product Center of Mass typically 6 inches above the top of shelf at each level.

UPLIFT - ANCHORS REQUIRED

Load Case 2* [per RMI sect. 2.6.8(2) - PL=1.0(PL)]
[per RMI sect. 2.6.2, PL_{RF} = 1.0]

Seismic $(C_s)(I_p)$ =	0.315	W_s (Cross-Aisle)
$W_s = (0.67)(PL_{RF})((1)PL)+DL$ =	200.5 lbs	
Base Shear, $V = C_s I_p W_s$ =	63.2 lbs	
Horizontal forces per level, $F_x = C_{vx}V$ (RMI sect 2.6.6)		
(Service Loads) F_9 =	0.0 lbs	
F_8 =	0.0 lbs	
F_7 =	0.0 lbs	
F_6 =	0.0 lbs	
F_5 =	33.8 lbs	@ 84in (CM)
F_4 =	0.0 lbs	
F_3 =	0.0 lbs	
F_2 =	0.0 lbs	
F_1 =	0.0 lbs	
F_u =	10.5 lbs	@ 39in (CM)
Σf_i =	63.2 lbs	(@ Factored Loads)
Calculate Overturning Moment (Service), $M_{OT} = \Sigma f_i h_i$		
M_{OT} =	3247 in-lbs	
Calculate Resisting Moment (Service), M_{RST}		
M_{RST} =	1875 in-lbs	
Factor of Safety		
FOS =	0.577	

UPLIFT - ANCHORS REQUIRED

Base Reactions:

Reactions (Service Loads):	LC #1		LC #2	
R_h =	48 lbs		22 lbs	
R_v =	75 lbs	(Uplift)	91 lbs	(Uplift)
Overturning FOS =	0.800	< 1.5--ABs Reqd	0.577	<1.5--ABs Reqd
Sliding Restraint force, R_{RST} / FOS =	148lbs / 3.078 >= 1.5 OK		79lbs / 3.578 >= 1.5 OK	
Reactions (Factored Loads):	LC #1		LC #2	
Base Shear (R_{uh}) =	138 lbs		63 lbs	
Net Uplift (R_{uv}) =	852 lbs		527 lbs	
Overturning + Gravity (P_u) =	1250 lbs		606 lbs	

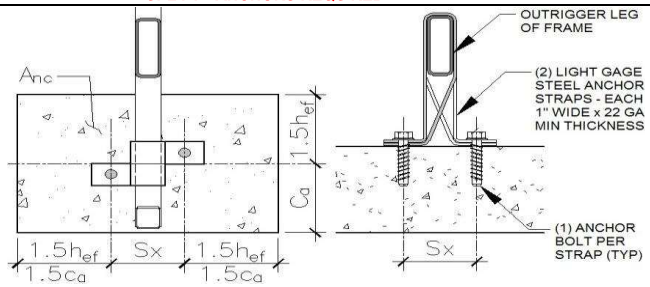

Anchor Design (using "Cracked Concrete" Properties)

Try:	3/8" DIA Hilti Kwik Bolt-TZ2 (CS) Anchor - 2 1/2" embed.	
Embedment =	2.5 in	
f'_c =	3500 psi	
e_h' =	0 in	<--- Eccen. Of Anchor
h_{ef} =	2 in	$1.5(h_{ef})$ = 3.000 in
c_a =	3.5 in	$1.5(c_a)$ = 5.250 in
Conc. thickness, t =	4 in	
# of Anchors, n =	2	- anchors per connection
S_X =	2.5 in	
A_{se} =	0.051 in^2	

Tension Allowables

Steel Strength, ϕN_{sa} =	8437 lbs	<--ACI 318-14 Eq 17.4.1.2		
Concrete Breakout, $(0.75)\phi N_{cbq}$ =	2427 lbs	<--ACI 318-14 Eq 17.4.2.1b		
Pullout Strength, $(0.75)\phi N_{pn}$ =	NA	<--ACI 318-14 Eq 17.4.3.1		
	LC #1		LC #2	
Factored Tension Load (N_u) =	852 lbs		527 lbs	
max tension stress ratio (TSR) =	0.351	OK	0.217	OK

Shear Allowables

Steel Strength, ϕV_{sa} =	4062 lbs	<--ACI 318-14 Eq 17.5.1.2c		
Concrete breakout, ϕV_{cbq} =	1533 lbs	<--ACI 318-14 Eq 17.5.2.1b		
Concrete pryout, ϕV_{cpq} =	3485 lbs	<--ACI 318-14 Eq 17.5.3.1b		
	LC #1		LC #2	
Factored Shear Load (V_u) =	138 lbs		63 lbs	
Max shear stress ratio (VSR) =	0.090	OK	0.041	OK
Combined shear and tension stress ratio (TSR + VSR) =	0.441	< 1.2 OK - LC#1 (controls)		

USE: (2) 3/8" DIA Hilti Kwik Bolt-TZ2 (CS) Anchor - 2 1/2" embed. ICC REPORT #ESR-4266

JOHNSTON BURKHOLDER ASSOCIATES
consulting structural engineers
930 CENTRAL · KANSAS CITY, MO 64105
816.421.4200 · WWW.JBAENGR.COM

PROJECT NO:	SHEET NO:	OF:
2401802403	18	66
PROJECT NAME: #02403 - Puyallup, WA		
MADE BY: KSH	DATE: 04/19/24	
CHECKED BY:	DATE:	

Shelving / Single Sided 78" Tall "V" 5 Level 24V

IBC 2021 / ASCE 7-16 / 2016 RMI (ANSI/MH16.3-16)

Punching Shear Check:
(Design per ACI 318-14 section 14.5.5)

Max. Factored Vertical Load (P_u) =	1250	lbs
Slab Concrete f '$_c$ =	3500	psi
Slab thickness (t) =	4	in.
Rack Post X-X =	2	in.
Rack Post Y-Y =	2	in.
b_o =	24.00	in.
β =	1.00	
V_n =	22718	lbs Eq. (22-10)
V_n max =	15107	lbs Eq. (22-10)
ϕV_n =	9064.38	lbs
$V_u/\phi V_n$ =	0.138	< 1.0 O.K.

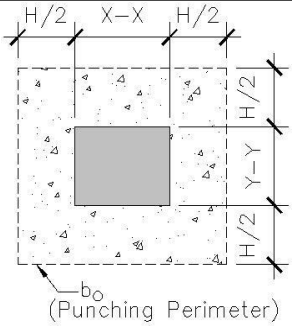

Slab tension based on Soil bearing area check:

Allowable soil bearing =	1500	psf
Max. Vertical Load (Service) (P) =	650	lbs
Area reqd. for bearing (A_{reqd}) =	0.43	ft^2
"b" distance =	7.90	in
Slab thickness (t) =	4.00	in
S = (1")(t)^2/6 =	2.67	in^3/in
ϕM_{nt} (tension allowable) = $\phi_t(7.5)[(f'_c)^{1/2}](S)$ =	710	in-lb/in
Factored uniform bearing, $w_u = P_u / A_{reqd}$ =	20	lb/in/in
$M_u = w_u L^2/3 = (w_u)[(b-(2''))/2)^2] / 3$ =	58.10	in-lb/in - Defl. End M1 = 30 in-lb/in
$M_u/\phi M_{nt}$ =	0.082	< 1.0 O.K.

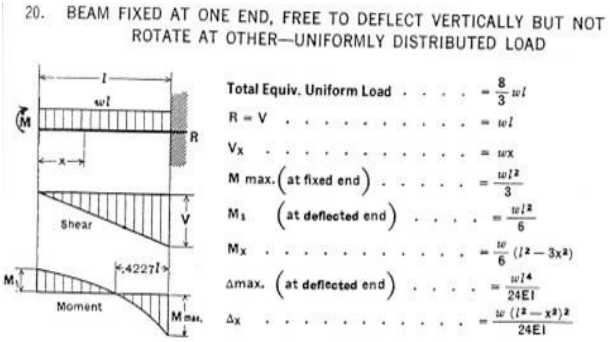

Shelving Fixture FOS Overturning with Resistance from Effective Weight of Slab on Grade:

Width of Single Rack =	15	in
Slab thickness (t) =	4.0	in
Modulus of Rupture, f_r = 7.5*SQRT(f'c) =	443.7	psi
Concrete Slab Section Modulus, S = b(t)^2/6 =	32.0	in^3/ft
Allowable Concrete Slab Bending Moment, $M_{all}/FS = S*f_r/1.5$ =	1183.2	ft*lbs/ft
Effective Cantilever Span Length (L_c) at M_{all} =	6.9	ft
Total Length of Slab (l_c + Width of Single Rack) =	8.1	ft
Trib. Width of Slab = Trib width of Rack =	4.0	ft
Weight of Concrete Slab at Rack (P_{conc}) =	1626	lbs
Resisting Moment - Concrete Slab at Rack, $M_{RST(slab)} = P_{conc} * L_c/2$ =	79308	in*lbs
Load Combination #1: M_{OT} =	5627	in*lbs
$M_{RST(Rack)} + M_{RST(slab)}$ =	83808	in*lbs
Total Overturning FOS =	14.894	OK
Load Combination #2: M_{OT} =	3247	in*lbs
$M_{RST(Rack)} + M_{RST(slab)}$ =	81183	in*lbs
Total Overturning FOS =	25.000	OK

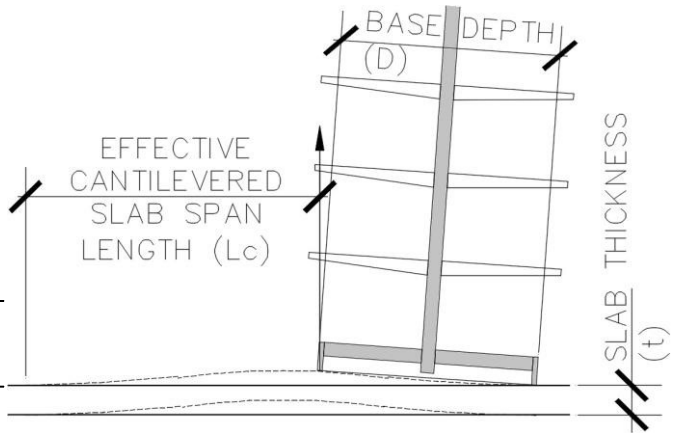

JOHNSTON BURKHOLDER ASSOCIATES
consulting structural engineers
930 CENTRAL · KANSAS CITY, MO 64105
816.421.4200 · WWW.JBAENGR.COM

PROJECT NO: 2401802403	SHEET NO: 19	OF: 66	
PROJECT NAME: #02403 - Puyallup, WA			
MADE BY: KSH	DATE: 04/19/24		
CHECKED BY:	DATE:		

Shelving / Single Sided | 84" Tall "W" 5 Level | 24W

IBC 2021 / ASCE 7-16 / 2016 RMI (ANSI/MH16.3-16)

Seismic Importance Factor =	1.5	
Supported on Elevated Floor (Y/N):	No	
Total Load per shelf =	150 lbs	
# of Levels =	Wall 5 Level	
Uniform Weight per level =	18.75 psf/shelf	
Weight of Unit =	100 lbs	
Anchorage spacing/Trib width =	4 ft	(*Frames are assumed to be 4'-0" oc*)
Shelf depth =	24 in	Shelf Load / Level
h_9 =	0 in	
h_8 =	0 in	
h_7 =	0 in	
h_6 =	0 in	
h_5 =	20 in	150 lbs
h_4 =	19 in	150 lbs
h_3 =	20 in	150 lbs
h_2 =	19 in	150 lbs
h_1 =	6 in	150 lbs
Total Shelf Height, H_t =	84 in	
Unit Height, H_u =	84 in	
Unit Base Depth, D =	15 in	

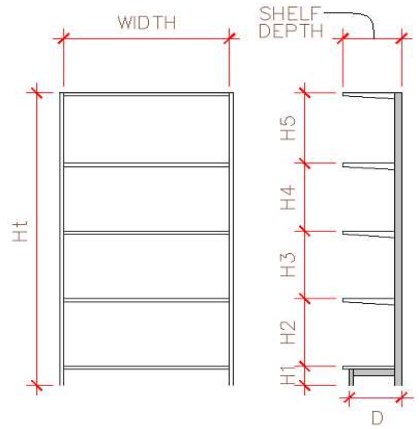

Overturning Stability (Load cases are per ASCE 7 sect. 15.5.3.6):

Load Case 1* [per RMI sect. 2.6.8(1) - PL=0.67(PL)]
[per RMI sect. 2.6.2, PL_{RF} = 1.0]

Seismic $(C_s)(I_p)$ = 0.315 W_s (Cross-Aisle)
$W_s = (0.67)(PL_{RF})((0.67)PL)+DL$ = 436.7 lbs
Base Shear, $V = C_s I_p W_s$ = 137.7 lbs
Horizontal forces per level, $F_x = C_{vx}V$ (RMI sect 2.6.6)

(Service Loads, E = 0.7)		
F_9 =	0.0 lbs	@ 0 in (CM)
F_8 =	0.0 lbs	@ 0 in (CM)
F_7 =	0.0 lbs	@ 0 in (CM)
F_6 =	0.0 lbs	@ 0 in (CM)
F_5 =	29.3 lbs	@ 90 in (CM)
F_4 =	22.8 lbs	@ 70 in (CM)
F_3 =	16.6 lbs	@ 51 in (CM)
F_2 =	10.1 lbs	@ 31 in (CM)
F_1 =	3.9 lbs	@ 12 in (CM)
F_u =	13.6 lbs	@ 42 in (CM)
Σf_i =	137.7 lbs	(@ Factored Loads)

Note:
(CM) = Product Center of Mass typically 6 inches above the top of shelf at each level.

Calculate Overturning Moment (Service), $M_{OT} = \Sigma f_i h_i$
M_{OT} = 6017 in-lbs
Calculate Resisting Moment (Service), M_{RST}
M_{RST} = 4500 in-lbs
Factor of Safety
FOS = 0.748
UPLIFT - ANCHORS REQUIRED

Load Case 2* [per RMI sect. 2.6.8(2) - PL=1.0(PL)]
[per RMI sect. 2.6.2, PL_{RF} = 1.0]

Seismic $(C_s)(I_p)$ = 0.315 W_s (Cross-Aisle)
$W_s = (0.67)(PL_{RF})((1)PL)+DL$ = 200.5 lbs
Base Shear, $V = C_s I_p W_s$ = 63.2 lbs
Horizontal forces per level, $F_x = C_{vx}V$ (RMI sect 2.6.6)

(Service Loads)		
F_9 =	0.0 lbs	
F_8 =	0.0 lbs	
F_7 =	0.0 lbs	
F_6 =	0.0 lbs	
F_5 =	33.8 lbs	@ 90in (CM)
F_4 =	0.0 lbs	
F_3 =	0.0 lbs	
F_2 =	0.0 lbs	
F_1 =	0.0 lbs	
F_u =	10.5 lbs	@ 42in (CM)
Σf_i =	63.2 lbs	(@ Factored Loads)

Calculate Overturning Moment (Service), $M_{OT} = \Sigma f_i h_i$
M_{OT} = 3480 in-lbs
Calculate Resisting Moment (Service), M_{RST}
M_{RST} = 1875 in-lbs
Factor of Safety
FOS = 0.539
UPLIFT - ANCHORS REQUIRED

Base Reactions:

Reactions (Service Loads):	LC #1		LC #2	
R_h =	48 lbs		22 lbs	
R_v =	101 lbs	(Uplift)	107 lbs	(Uplift)
Overturning FOS =	0.748	< 1.5--ABs Reqd	0.539	<1.5--ABs Reqd
Sliding Restraint force, R_{RST} / FOS =	155lbs / 3.213 >= 1.5 OK		83lbs / 3.753 >= 1.5 OK	
Reactions (Factored Loads):	**LC #1**		**LC #2**	
Base Shear (R_{uh}) =	138 lbs		63 lbs	
Net Uplift (R_{uv}) =	927 lbs		571 lbs	
Overturning + Gravity (P_u) =	1305 lbs		639 lbs	

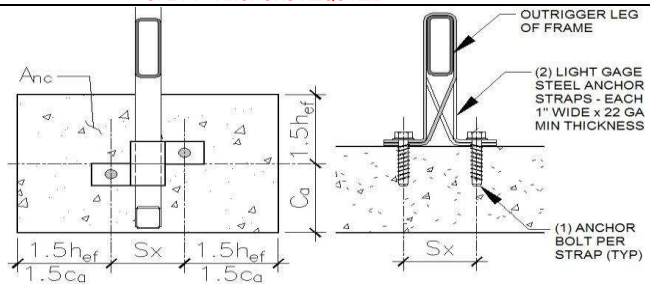

Anchor Design (using "Cracked Concrete" Properties)

Try: 3/8" DIA Hilti Kwik Bolt-TZ2 (CS) Anchor - 2 1/2" embed.

Embedment =	2.5 in	
f'_c =	3500 psi	
e_h' =	0 in	<--- Eccen. Of Anchor
h_{ef} =	2 in	$1.5(h_{ef})$ = 3.000 in
c_a =	3.5 in	$1.5(c_a)$ = 5.250 in
Conc. thickness, t =	4 in	
# of Anchors, n =	2	- anchors per connection
S_X =	2.5 in	
A_{se} =	0.051 in^2	

Tension Allowables

Steel Strength, ϕN_{sa} =	8437 lbs	<--ACI 318-14 Eq 17.4.1.2
Concrete Breakout, $(0.75)\phi N_{cbq}$ =	2427 lbs	<--ACI 318-14 Eq 17.4.2.1b
Pullout Strength, $(0.75)\phi N_{pn}$ =	NA	<--ACI 318-14 Eq 17.4.3.1

	LC #1		LC #2	
Factored Tension Load (N_u) =	927 lbs		571 lbs	
max tension stress ratio (TSR) =	0.382	OK	0.235	OK

Shear Allowables

Steel Strength, ϕV_{sa} =	4062 lbs	<--ACI 318-14 Eq 17.5.1.2c
Concrete breakout, ϕV_{cbq} =	1533 lbs	<--ACI 318-14 Eq 17.5.2.1b
Concrete pryout, ϕV_{cpq} =	3485 lbs	<--ACI 318-14 Eq 17.5.3.1b

	LC #1		LC #2	
Factored Shear Load (V_u) =	138 lbs		63 lbs	
Max shear stress ratio (VSR) =	0.090	OK	0.041	OK
Combined shear and tension stress ratio (TSR + VSR) =	0.472	< 1.2 OK - LC#1 (controls)		

USE: (2) 3/8" DIA Hilti Kwik Bolt-TZ2 (CS) Anchor - 2 1/2" embed. ICC REPORT #ESR-4266

JOHNSTON BURKHOLDER ASSOCIATES
consulting structural engineers
930 CENTRAL · KANSAS CITY, MO 64105
816.421.4200 · WWW.JBAENGR.COM

PROJECT NO: 2401802403	SHEET NO: 20	OF: 66
PROJECT NAME: #02403 - Puyallup, WA		
MADE BY: KSH	DATE: 04/19/24	
CHECKED BY:	DATE:	

Shelving / Single Sided 84" Tall "W" 5 Level 24W

IBC 2021 / ASCE 7-16 / 2016 RMI (ANSI/MH16.3-16)

Punching Shear Check:
(Design per ACI 318-14 section 14.5.5)

Max. Factored Vertical Load (P_u) =	1305	lbs
Slab Concrete f'_c =	3500	psi
Slab thickness (t) =	4	in.
Rack Post X-X =	2	in.
Rack Post Y-Y =	2	in.
b_o =	24.00	in.
β =	1.00	
V_n =	22718	lbs Eq. (22-10)
V_n max =	15107	lbs Eq. (22-10)
ϕV_n =	9064.38	lbs
$V_u/\phi V_n$ =	0.144	< 1.0 O.K.

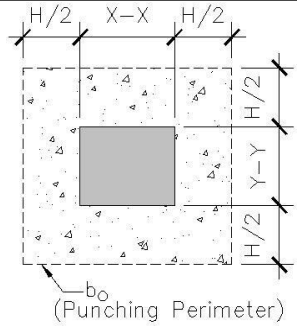

Slab tension based on Soil bearing area check:

Allowable soil bearing =	1500	psf
Max. Vertical Load (Service) (P) =	670	lbs
Area reqd. for bearing (A_{reqd}) =	0.45	ft^2
"b" distance =	8.02	in
Slab thickness (t) =	4.00	in
S = $(1")(t)^2/6$ =	2.67	in^3/in
ϕM_{nt} (tension allowable) = $\phi_t(7.5)[(f'_c)^{1/2}](S)$ =	710	in-lb/in
Factored uniform bearing, $w_u = P_u / A_{reqd}$ =	20	lb/in/in
$M_u = w_u L^2/3 = (w_u)[(b-(2"))/2)^2] / 3$ =	61.27	in-lb/in - Defl. End M1 = 31 in-lb/in
$M_u/\phi M_{nt}$ =	0.086	< 1.0 O.K.

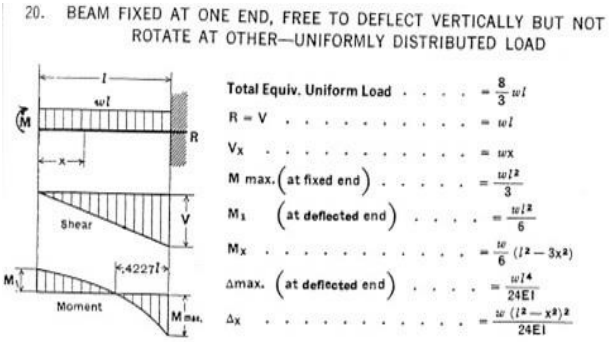

Shelving Fixture FOS Overturning with Resistance from Effective Weight of Slab on Grade:

Width of Single Rack =	15	in
Slab thickness (t) =	4.0	in
Modulus of Rupture, f_r = 7.5*SQRT(f'c) =	443.7	psi
Concrete Slab Section Modulus, S = $b(t)^2/6$ =	32.0	in^3/ft
Allowable Concrete Slab Bending Moment, $M_{all}/FS = S*f_r/1.5$ =	1183.2	ft*lbs/ft
Effective Cantilever Span Length (L_c) at M_{all} =	6.9	ft
Total Length of Slab (l_c + Width of Single Rack) =	8.1	ft
Trib. Width of Slab = Trib width of Rack =	4.0	ft
Weight of Concrete Slab at Rack (P_{conc}) =	1626	lbs
Resisting Moment - Concrete Slab at Rack, $M_{RST(slab)} = P_{conc} * L_c/2$ =	79308	in*lbs
Load Combination #1: M_{OT} =	6017	in*lbs
$M_{RST(Rack)} + M_{RST(slab)}$ =	83808	in*lbs
Total Overturning FOS =	13.929	OK
Load Combination #2: M_{OT} =	3480	in*lbs
$M_{RST(Rack)} + M_{RST(slab)}$ =	81183	in*lbs
Total Overturning FOS =	23.332	OK

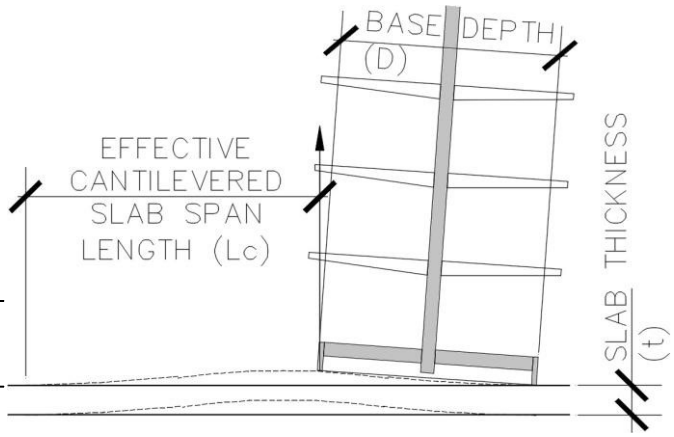

JOHNSTON BURKHOLDER ASSOCIATES
consulting structural engineers
930 CENTRAL · KANSAS CITY, MO 64105
816.421.4200 · WWW.JBAENGR.COM

PROJECT NO: 2401802403		SHEET NO: 21	OF: 66
PROJECT NAME: #02403 - Puyallup, WA			
MADE BY: KSH		DATE: 04/19/24	
CHECKED BY:		DATE:	

Shelving / Single Sided | 90" Tall "X" 5 Level | 24X

IBC 2021 / ASCE 7-16 / 2016 RMI (ANSI/MH16.3-16)

Seismic Importance Factor =	1.5	
Supported on Elevated Floor (Y/N):	No	
Total Load per shelf =	150 lbs	
# of Levels =	Wall 5 Level	
Uniform Weight per level =	18.75 psf/shelf	
Weight of Unit =	100 lbs	
Anchorage spacing/Trib width =	4 ft	(*Frames are assumed to be 4'-0" oc*)
Shelf depth =	24 in	Shelf Load / Level
h_9 =	0 in	
h_8 =	0 in	
h_7 =	0 in	
h_6 =	0 in	
h_5 =	21 in	150 lbs
h_4 =	21 in	150 lbs
h_3 =	21 in	150 lbs
h_2 =	21 in	150 lbs
h_1 =	6 in	150 lbs
Total Shelf Height, H_t =	90 in	
Unit Height, H_u =	90 in	
Unit Base Depth, D =	15 in	

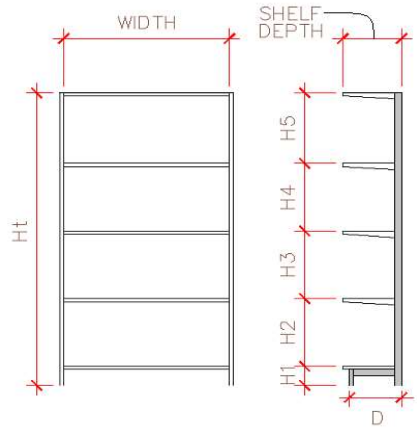

Overturning Stability (Load cases are per ASCE 7 sect. 15.5.3.6):

Load Case 1* [per RMI sect. 2.6.8(1) - PL=0.67(PL)]
[per RMI sect. 2.6.2, PL_{RF} = 1.0]

Seismic $(C_s)(I_p)$ =	0.315	W_s (Cross-Aisle)
$W_s = (0.67)(PL_{RF})((0.67)PL)+DL$ =	436.7 lbs	
Base Shear, $V = C_sI_pW_s$ =	137.7 lbs	
Horizontal forces per level, $F_x = C_{vx}V$ (RMI sect 2.6.6)		
(Service Loads, E = 0.7) F_9 =	0.0 lbs	@ 0 in (CM)
F_8 =	0.0 lbs	@ 0 in (CM)
F_7 =	0.0 lbs	@ 0 in (CM)
F_6 =	0.0 lbs	@ 0 in (CM)
F_5 =	29.4 lbs	@ 96 in (CM)
F_4 =	23.0 lbs	@ 75 in (CM)
F_3 =	16.5 lbs	@ 54 in (CM)
F_2 =	10.1 lbs	@ 33 in (CM)
F_1 =	3.7 lbs	@ 12 in (CM)
F_u =	13.7 lbs	@ 45 in (CM)
Σf_i =	137.7 lbs	(@ Factored Loads)
Calculate Overturning Moment (Service), $M_{OT} = \Sigma f_i h_i$		
M_{OT} =	6433 in-lbs	
Calculate Resisting Moment (Service), M_{RST}		
M_{RST} =	4500 in-lbs	
Factor of Safety		
FOS =	0.700	

Note: (CM) = Product Center of Mass typically 6 inches above the top of shelf at each level.

UPLIFT - ANCHORS REQUIRED

Load Case 2* [per RMI sect. 2.6.8(2) - PL=1.0(PL)]
[per RMI sect. 2.6.2, PL_{RF} = 1.0]

Seismic $(C_s)(I_p)$ =	0.315	W_s (Cross-Aisle)
$W_s = (0.67)(PL_{RF})((1)PL)+DL$ =	200.5 lbs	
Base Shear, $V = C_sI_pW_s$ =	63.2 lbs	
Horizontal forces per level, $F_x = C_{vx}V$ (RMI sect 2.6.6)		
(Service Loads) F_9 =	0.0 lbs	
F_8 =	0.0 lbs	
F_7 =	0.0 lbs	
F_6 =	0.0 lbs	
F_5 =	33.7 lbs	@ 96in (CM)
F_4 =	0.0 lbs	
F_3 =	0.0 lbs	
F_2 =	0.0 lbs	
F_1 =	0.0 lbs	
F_u =	10.5 lbs	@ 45in (CM)
Σf_i =	63.2 lbs	(@ Factored Loads)
Calculate Overturning Moment (Service), $M_{OT} = \Sigma f_i h_i$		
M_{OT} =	3712 in-lbs	
Calculate Resisting Moment (Service), M_{RST}		
M_{RST} =	1875 in-lbs	
Factor of Safety		
FOS =	0.505	

UPLIFT - ANCHORS REQUIRED

Base Reactions:

Reactions (Service Loads):	LC #1		LC #2	
R_h =	48 lbs		22 lbs	
R_v =	129 lbs	(Uplift)	122 lbs	(Uplift)
Overturning FOS =	0.700	< 1.5--ABs Reqd	0.505	<1.5--ABs Reqd
Sliding Restraint force, R_{RST} / FOS =	162lbs / 3.357 >= 1.5 OK		87lbs / 3.928 >= 1.5 OK	
Reactions (Factored Loads):	LC #1		LC #2	
Base Shear (R_{uh}) =	138 lbs		63 lbs	
Net Uplift (R_{uv}) =	1006 lbs		616 lbs	
Overturning + Gravity (P_u) =	1365 lbs		672 lbs	

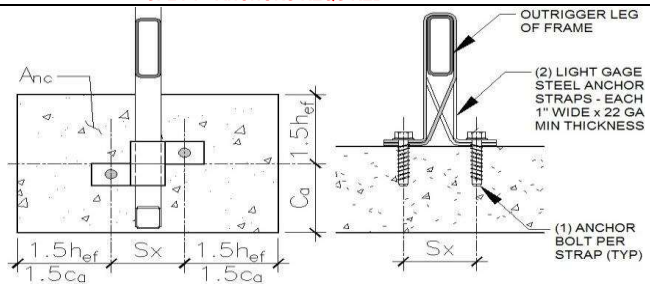

Anchor Design (using "Cracked Concrete" Properties)

Try: 3/8" DIA Hilti Kwik Bolt-TZ2 (CS) Anchor - 2 1/2" embed.

Embedment =	2.5 in	
f'_c =	3500 psi	
e_h' =	0 in	<--- Eccen. Of Anchor
h_{ef} =	2 in	$1.5(h_{ef})$ = 3.000 in
c_a =	3.5 in	$1.5(c_a)$ = 5.250 in
Conc. thickness, t =	4 in	
# of Anchors, n =	2	- anchors per connection
S_X =	2.5 in	
A_{se} =	0.051 in^2	

Tension Allowables

Steel Strength, ϕN_{sa} =	8437 lbs	<--ACI 318-14 Eq 17.4.1.2		
Concrete Breakout, $(0.75)\phi N_{cbq}$ =	2427 lbs	<--ACI 318-14 Eq 17.4.2.1b		
Pullout Strength, $(0.75)\phi N_{pn}$ =	NA	<--ACI 318-14 Eq 17.4.3.1		
	LC #1		LC #2	
Factored Tension Load (N_u) =	1006 lbs		616 lbs	
max tension stress ratio (TSR) =	0.414	OK	0.254	OK

Shear Allowables

Steel Strength, ϕV_{sa} =	4062 lbs	<--ACI 318-14 Eq 17.5.1.2c		
Concrete breakout, ϕV_{cbq} =	1533 lbs	<--ACI 318-14 Eq 17.5.2.1b		
Concrete pryout, ϕV_{cpq} =	3485 lbs	<--ACI 318-14 Eq 17.5.3.1b		
	LC #1		LC #2	
Factored Shear Load (V_u) =	138 lbs		63 lbs	
Max shear stress ratio (VSR) =	0.090	OK	0.041	OK
Combined shear and tension stress ratio (TSR + VSR) =	0.504	< 1.2 OK - LC#1 (controls)		

USE: (2) 3/8" DIA Hilti Kwik Bolt-TZ2 (CS) Anchor - 2 1/2" embed. ICC REPORT #ESR-4266

JOHNSTON BURKHOLDER ASSOCIATES
consulting structural engineers
930 CENTRAL · KANSAS CITY, MO 64105
816.421.4200 · WWW.JBAENGR.COM

PROJECT NO:	SHEET NO:	OF:
2401802403	22	66
PROJECT NAME: #02403 - Puyallup, WA		
MADE BY: KSH	DATE: 04/19/24	
CHECKED BY:	DATE:	

Shelving / Single Sided 90" Tall "X" 5 Level 24X

IBC 2021 / ASCE 7-16 / 2016 RMI (ANSI/MH16.3-16)

Punching Shear Check:
(Design per ACI 318-14 section 14.5.5)

Max. Factored Vertical Load (P_u) =	1365	lbs
Slab Concrete f'_c =	3500	psi
Slab thickness (t) =	4	in.
Rack Post X-X =	2	in.
Rack Post Y-Y =	2	in.
b_o =	24.00	in.
β =	1.00	
V_n =	22718	lbs Eq. (22-10)
V_n max =	15107	lbs Eq. (22-10)
ϕV_n =	9064.38	lbs
$V_u/\phi V_n$ =	0.151	< 1.0 O.K.

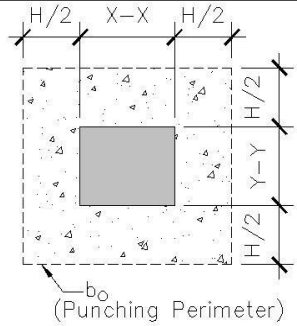

Slab tension based on Soil bearing area check:

Allowable soil bearing =	1500	psf
Max. Vertical Load (Service) (P) =	691	lbs
Area reqd. for bearing (A_{reqd}) =	0.46	ft^2
"b" distance =	8.14	in
Slab thickness (t) =	4.00	in
S = $(1")(t)^2/6$ =	2.67	in^3/in
ϕM_{nt} (tension allowable) = $\phi_t(7.5)[(f'_c)^{1/2}](S)$ =	710	in-lb/in
Factored uniform bearing, $w_u = P_u / A_{reqd}$ =	21	lb/in/in
$M_u = w_u L^2/3 = (w_u)[(b-(2"))/2)^2] / 3$ =	64.74	in-lb/in - Defl. End M1 = 33 in-lb/in
$M_u/\phi M_{nt}$ =	0.091	< 1.0 O.K.

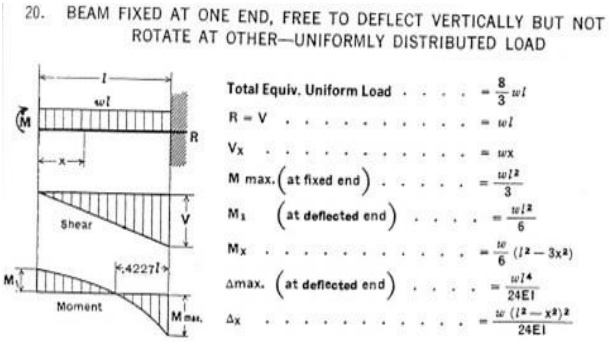

Shelving Fixture FOS Overturning with Resistance from Effective Weight of Slab on Grade:

Width of Single Rack =	15	in
Slab thickness (t) =	4.0	in
Modulus of Rupture, f_r = 7.5*SQRT(f'c) =	443.7	psi
Concrete Slab Section Modulus, S = $b(t)^2/6$ =	32.0	in^3/ft
Allowable Concrete Slab Bending Moment, $M_{all}/FS = S*f_r/1.5$ =	1183.2	ft*lbs/ft
Effective Cantilever Span Length (L_c) at M_{all} =	6.9	ft
Total Length of Slab (l_c + Width of Single Rack) =	8.1	ft
Trib. Width of Slab = Trib width of Rack =	4.0	ft
Weight of Concrete Slab at Rack (P_{conc}) =	1626	lbs
Resisting Moment - Concrete Slab at Rack, $M_{RST(slab)} = P_{conc} * L_c/2$ =	79308	in*lbs
Load Combination #1: M_{OT} =	6433	in*lbs
$M_{RST(Rack)} + M_{RST(slab)}$ =	83808	in*lbs
Total Overturning FOS =	13.028	OK
Load Combination #2: M_{OT} =	3712	in*lbs
$M_{RST(Rack)} + M_{RST(slab)}$ =	81183	in*lbs
Total Overturning FOS =	21.872	OK

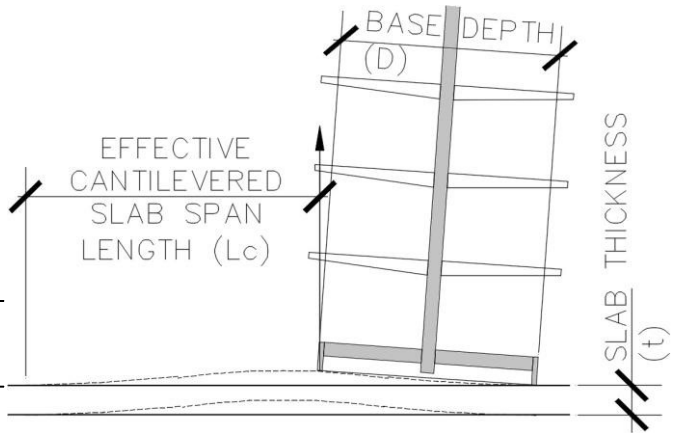

JOHNSTON BURKHOLDER ASSOCIATES
consulting structural engineers
930 CENTRAL · KANSAS CITY, MO 64105
816.421.4200 · WWW.JBAENGR.COM

PROJECT NO: 2401802403	SHEET NO: 23	OF: 66
PROJECT NAME: #02403 - Puyallup, WA		
MADE BY: KSH	DATE: 04/19/24	
CHECKED BY:	DATE:	

Shelving / Single Sided | 90" Tall "X" 5 Level | 24XSD

IBC 2021 / ASCE 7-16 / 2016 RMI (ANSI/MH16.3-16)

Seismic Importance Factor =	1.5		
Supported on Elevated Floor (Y/N):	No		
Total Load per shelf =	225 lbs		
# of Levels =	Wall 5 Level		
Uniform Weight per level =	28.13 psf/shelf		
Weight of Unit =	100 lbs		
Anchorage spacing/Trib width =	4 ft	(*Frames are assumed to be 4'-0" oc*)	
Shelf depth =	24 in		Shelf Load / Level
h_9 =	0 in		
h_8 =	0 in		
h_7 =	0 in		
h_6 =	0 in		
h_5 =	21 in		225 lbs
h_4 =	21 in		225 lbs
h_3 =	21 in		225 lbs
h_2 =	21 in		225 lbs
h_1 =	6 in		225 lbs
Total Shelf Height, H_t =	90 in		
Unit Height, H_u =	90 in		
Unit Base Depth, D =	15 in		

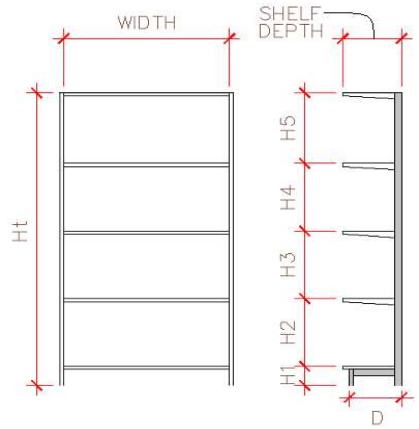

Overturning Stability (Load cases are per ASCE 7 sect. 15.5.3.6):

Load Case 1* [per RMI sect. 2.6.8(1) - PL=0.67(PL)]
[per RMI sect. 2.6.2, PL_{RF} = 1.0]

Seismic $(C_s)(I_p)$ =	0.315	W_s (Cross-Aisle)
$W_s = (0.67)(PL_{RF})((0.67)PL)+DL$ =	605.0 lbs	
Base Shear, $V = C_s I_p W_s$ =	190.8 lbs	
Horizontal forces per level, $F_x = C_{vx}V$ (RMI sect 2.6.6)		
(Service Loads, E = 0.7) F_9 =	0.0 lbs	@ 0 in (CM)
F_8 =	0.0 lbs	@ 0 in (CM)
F_7 =	0.0 lbs	@ 0 in (CM)
F_6 =	0.0 lbs	@ 0 in (CM)
F_5 =	42.8 lbs	@ 96 in (CM)
F_4 =	33.4 lbs	@ 75 in (CM)
F_3 =	24.1 lbs	@ 54 in (CM)
F_2 =	14.7 lbs	@ 33 in (CM)
F_1 =	5.3 lbs	@ 12 in (CM)
F_u =	13.3 lbs	@ 45 in (CM)
Σf_i =	190.8 lbs	(@ Factored Loads)
Calculate Overturning Moment (Service), $M_{OT} = \Sigma f_i h_i$		
M_{OT} =	9057 in-lbs	
Calculate Resisting Moment (Service), M_{RST}		
M_{RST} =	6375 in-lbs	
Factor of Safety		
FOS =	0.704	

Note: (CM) = Product Center of Mass typically 6 inches above the top of shelf at each level.

UPLIFT - ANCHORS REQUIRED

Load Case 2* [per RMI sect. 2.6.8(2) - PL=1.0(PL)]
[per RMI sect. 2.6.2, PL_{RF} = 1.0]

Seismic $(C_s)(I_p)$ =	0.315	W_s (Cross-Aisle)
$W_s = (0.67)(PL_{RF})((1)PL)+DL$ =	250.8 lbs	
Base Shear, $V = C_s I_p W_s$ =	79.1 lbs	
Horizontal forces per level, $F_x = C_{vx}V$ (RMI sect 2.6.6)		
(Service Loads) F_9 =	0.0 lbs	
F_8 =	0.0 lbs	
F_7 =	0.0 lbs	
F_6 =	0.0 lbs	
F_5 =	45.8 lbs	@ 96in (CM)
F_4 =	0.0 lbs	
F_3 =	0.0 lbs	
F_2 =	0.0 lbs	
F_1 =	0.0 lbs	
F_u =	9.5 lbs	@ 45in (CM)
Σf_i =	79.1 lbs	(@ Factored Loads)
Calculate Overturning Moment (Service), $M_{OT} = \Sigma f_i h_i$		
M_{OT} =	4827 in-lbs	
Calculate Resisting Moment (Service), M_{RST}		
M_{RST} =	2438 in-lbs	
Factor of Safety		
FOS =	0.505	

UPLIFT - ANCHORS REQUIRED

Base Reactions:

Reactions (Service Loads):	LC #1		LC #2	
R_h =	67 lbs		28 lbs	
R_v =	179 lbs	(Uplift)	159 lbs	(Uplift)
Overturning FOS =	0.704	< 1.5--ABs Reqd	0.505	<1.5--ABs Reqd
Sliding Restraint force, R_{RST} / FOS =	227lbs / 3.393 >= 1.5 OK		112lbs / 4.039 >= 1.5 OK	
Reactions (Factored Loads):	LC #1		LC #2	
Base Shear (R_{uh}) =	191 lbs		79 lbs	
Net Uplift (R_{uv}) =	1414 lbs		801 lbs	
Overturning + Gravity (P_u) =	1929 lbs		869 lbs	

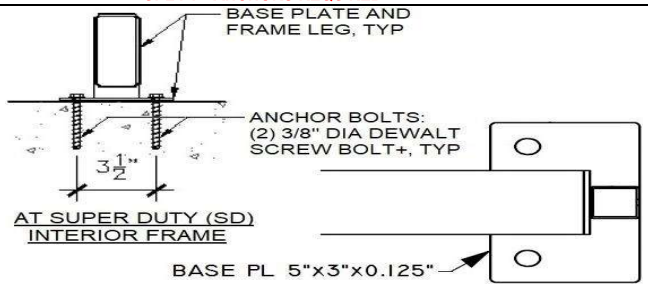

Anchor Design (using "Cracked Concrete" Properties)

Try:	3/8" DIA Hilti Kwik Bolt-TZ2 (CS) Anchor - 2 1/2" embed.	
Embedment =	2.5 in	
f'_c =	3500 psi	
e_h' =	0 in	<--- Eccen. Of Anchor
h_{ef} =	2 in	$1.5(h_{ef})$ = 3.000 in
c_a =	3.5 in	$1.5(c_a)$ = 5.250 in
Conc. thickness, t =	4 in	
# of Anchors, n =	2	- anchors per connection
S_X =	2.5 in	
A_{se} =	0.051 in^2	

Tension Allowables

Steel Strength, ϕN_{sa} =	8437 lbs	<--ACI 318-14 Eq 17.4.1.2		
Concrete Breakout, $(0.75)\phi N_{cbq}$ =	2427 lbs	<--ACI 318-14 Eq 17.4.2.1b		
Pullout Strength, $(0.75)\phi N_{pn}$ =	NA	<--ACI 318-14 Eq 17.4.3.1		
	LC #1		LC #2	
Factored Tension Load (N_u) =	1414 lbs		801 lbs	
max tension stress ratio (TSR) =	0.583	OK	0.330	OK

Shear Allowables

Steel Strength, ϕV_{sa} =	4062 lbs	<--ACI 318-14 Eq 17.5.1.2c		
Concrete breakout, ϕV_{cbq} =	1533 lbs	<--ACI 318-14 Eq 17.5.2.1b		
Concrete pryout, ϕV_{cpq} =	3485 lbs	<--ACI 318-14 Eq 17.5.3.1b		
	LC #1		LC #2	
Factored Shear Load (V_u) =	191 lbs		79 lbs	
Max shear stress ratio (VSR) =	0.125	OK	0.052	OK
Combined shear and tension stress ratio (TSR + VSR) =	0.707	< 1.2 OK - LC#1 (controls)		

USE: (2) 3/8" DIA Hilti Kwik Bolt-TZ2 (CS) Anchor - 2 1/2" embed. ICC REPORT #ESR-4266

JOHNSTON BURKHOLDER ASSOCIATES
consulting structural engineers
930 CENTRAL · KANSAS CITY, MO 64105
816.421.4200 · WWW.JBAENGR.COM

PROJECT NO:	SHEET NO:	OF:
2401802403	24	66
PROJECT NAME: #02403 - Puyallup, WA		
MADE BY: KSH	DATE: 04/19/24	
CHECKED BY:	DATE:	

Shelving / Single Sided 90" Tall "X" 5 Level 24XSD

IBC 2021 / ASCE 7-16 / 2016 RMI (ANSI/MH16.3-16)

Punching Shear Check:
(Design per ACI 318-14 section 14.5.5)

Max. Factored Vertical Load (P_u) =	1929	lbs
Slab Concrete f'_c =	3500	psi
Slab thickness (t) =	4	in.
Rack Post X-X =	2	in.
Rack Post Y-Y =	2	in.
b_o =	24.00	in.
β =	1.00	
V_n =	22718	lbs Eq. (22-10)
V_n max =	15107	lbs Eq. (22-10)
ϕV_n =	9064.38	lbs
$V_u/\phi V_n$ =	0.213	< 1.0 O.K.

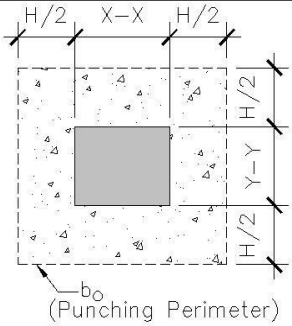

Slab tension based on Soil bearing area check:

Allowable soil bearing =	1500	psf
Max. Vertical Load (Service) (P) =	979	lbs
Area reqd. for bearing (A_{reqd}) =	0.65	ft^2
"b" distance =	9.69	in
Slab thickness (t) =	4.00	in
S = (1")$(t)^2$/6 =	2.67	in^3/in
ϕM_{nt} (tension allowable) = $\phi_t(7.5)[(f'_c)^{1/2}](S)$ =	710	in-lb/in
Factored uniform bearing, $w_u = P_u / A_{reqd}$ =	21	lb/in/in
$M_u = w_u L^2/3 = (w_u)[(b-(2"))/2)^2] / 3$ =	101.27	in-lb/in - Defl. End M1 = 51 in-lb/in
$M_u/\phi M_{nt}$ =	0.143	< 1.0 O.K.

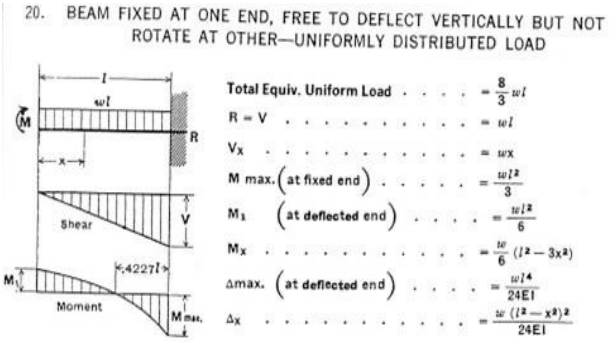

Shelving Fixture FOS Overturning with Resistance from Effective Weight of Slab on Grade:

Width of Single Rack =	15	in
Slab thickness (t) =	4.0	in
Modulus of Rupture, f_r = 7.5*SQRT(f'c) =	443.7	psi
Concrete Slab Section Modulus, S = $b(t)^2/6$ =	32.0	in^3/ft
Allowable Concrete Slab Bending Moment, $M_{all}/FS = S*f_r/1.5$ =	1183.2	ft*lbs/ft
Effective Cantilever Span Length (L_c) at M_{all} =	6.9	ft
Total Length of Slab (l_c + Width of Single Rack) =	8.1	ft
Trib. Width of Slab = Trib width of Rack =	4.0	ft
Weight of Concrete Slab at Rack (P_{conc}) =	1626	lbs
Resisting Moment - Concrete Slab at Rack, $M_{RST(slab)} = P_{conc} * L_c/2$ =	79308	in*lbs
Load Combination #1: M_{OT} =	9057	in*lbs
$M_{RST(Rack)} + M_{RST(slab)}$ =	85683	in*lbs
Total Overturning FOS =	9.460	OK
Load Combination #2: M_{OT} =	4827	in*lbs
$M_{RST(Rack)} + M_{RST(slab)}$ =	81746	in*lbs
Total Overturning FOS =	16.934	OK

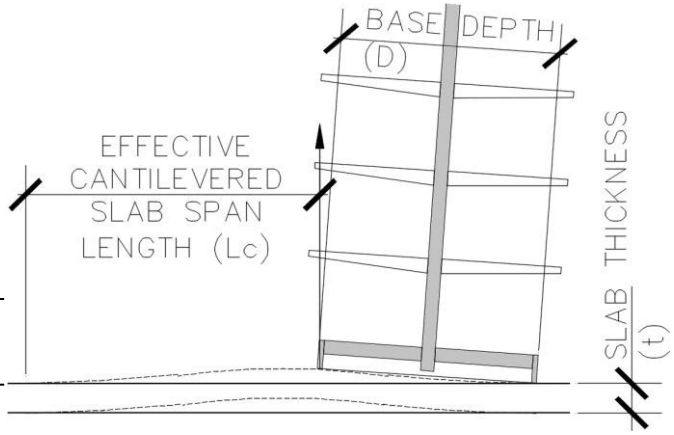

JOHNSTON BURKHOLDER ASSOCIATES
consulting structural engineers
930 CENTRAL · KANSAS CITY, MO 64105
816.421.4200 · WWW.JBAENGR.COM

PROJECT NO: 2401802403	SHEET NO: 25	OF: 66
PROJECT NAME: #02403 - Puyallup, WA		
MADE BY: KSH	DATE: 04/19/24	
CHECKED BY:	DATE:	

Shelving / Single Sided | 120" Tall "YZ" 4 Level | 30YZ

IBC 2021 / ASCE 7-16 / 2016 RMI (ANSI/MH16.3-16)

Seismic Importance Factor =	1.5	
Supported on Elevated Floor (Y/N):	No	
Total Load per shelf =	75 lbs	
# of Levels =	Wall 4 Level - HD TV	
Uniform Weight per level =	7.50 psf/shelf	
Weight of Unit =	100 lbs	
Anchorage spacing/Trib width =	4 ft	(*Frames are assumed to be 4'-0" oc*)
Shelf depth =	30 in	Shelf Load / Level
h_9 =	0 in	
h_8 =	0 in	
h_7 =	0 in	
h_6 =	0 in	
h_5 =	0 in	
h_4 =	30 in	75 lbs
h_3 =	30 in	75 lbs
h_2 =	30 in	75 lbs
h_1 =	6 in	75 lbs
Total Shelf Height, H_t =	96 in	
Unit Height, H_u =	120 in	
Unit Base Depth, D =	21 in	

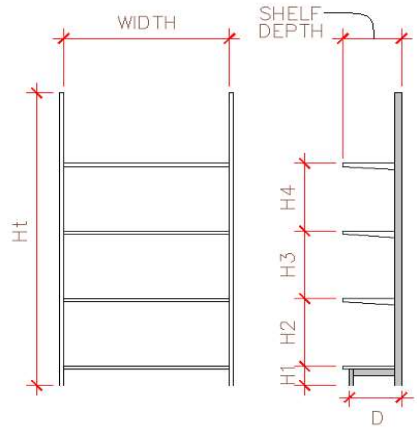

Overturning Stability (Load cases are per ASCE 7 sect. 15.5.3.6):

Load Case 1* [per RMI sect. 2.6.8(1) - PL=0.67(PL)]
[per RMI sect. 2.6.2, PL_{RF} = 1.0]

Seismic $(C_s)(I_p)$ = 0.315 W_s (Cross-Aisle)
$W_s = (0.67)(PL_{RF})((0.67)PL)+DL$ = 234.7 lbs
Base Shear, $V = C_s I_p W_s$ = 74.0 lbs
Horizontal forces per level, $F_x = C_{vx}V$ (RMI sect 2.6.6)

(Service Loads, E = 0.7)

F_9 =	0.0 lbs	@ 0 in (CM)
F_8 =	0.0 lbs	@ 0 in (CM)
F_7 =	0.0 lbs	@ 0 in (CM)
F_6 =	0.0 lbs	@ 0 in (CM)
F_5 =	0.0 lbs	@ 0 in (CM)
F_4 =	15.2 lbs	@ 102 in (CM)
F_3 =	10.7 lbs	@ 72 in (CM)
F_2 =	6.3 lbs	@ 42 in (CM)
F_1 =	1.8 lbs	@ 12 in (CM)
F_u =	17.8 lbs	@ 60 in (CM)
Σf_i =	74.0 lbs	(@ Factored Loads)

Note:
(CM) = Product Center of Mass typically 6 inches above the top of shelf at each level.

Calculate Overturning Moment (Service), $M_{OT} = \Sigma f_i h_i$
M_{OT} = 3677 in-lbs
Calculate Resisting Moment (Service), M_{RST}
M_{RST} = 3150 in-lbs
Factor of Safety
FOS = 0.857
UPLIFT - ANCHORS REQUIRED

Load Case 2* [per RMI sect. 2.6.8(2) - PL=1.0(PL)]
[per RMI sect. 2.6.2, PL_{RF} = 1.0]

Seismic $(C_s)(I_p)$ = 0.315 W_s (Cross-Aisle)
$W_s = (0.67)(PL_{RF})((1)PL)+DL$ = 150.3 lbs
Base Shear, $V = C_s I_p W_s$ = 47.4 lbs
Horizontal forces per level, $F_x = C_{vx}V$ (RMI sect 2.6.6)

(Service Loads)

F_9 =	0.0 lbs	
F_8 =	0.0 lbs	
F_7 =	0.0 lbs	
F_6 =	0.0 lbs	
F_5 =	0.0 lbs	
F_4 =	18.6 lbs	@ 102in (CM)
F_3 =	0.0 lbs	
F_2 =	0.0 lbs	
F_1 =	0.0 lbs	
F_u =	14.6 lbs	@ 60in (CM)
Σf_i =	47.4 lbs	(@ Factored Loads)

Calculate Overturning Moment (Service), $M_{OT} = \Sigma f_i h_i$
M_{OT} = 2771 in-lbs
Calculate Resisting Moment (Service), M_{RST}
M_{RST} = 1838 in-lbs
Factor of Safety
FOS = 0.663
UPLIFT - ANCHORS REQUIRED

Base Reactions:

Reactions (Service Loads):	LC #1		LC #2	
R_h =	26 lbs		17 lbs	
R_v =	25 lbs	(Uplift)	44 lbs	(Uplift)
Overturning FOS =	0.857	< 1.5--ABs Reqd	0.663	<1.5--ABs Reqd
Sliding Restraint force, R_{RST} / FOS =	73lbs / 2.823 >= 1.5 OK		52lbs / 3.121 >= 1.5 OK	
Reactions (Factored Loads):	**LC #1**		**LC #2**	
Base Shear (R_{uh}) =	74 lbs		47 lbs	
Net Uplift (R_{uv}) =	391 lbs		313 lbs	
Overturning + Gravity (P_u) =	595 lbs		388 lbs	

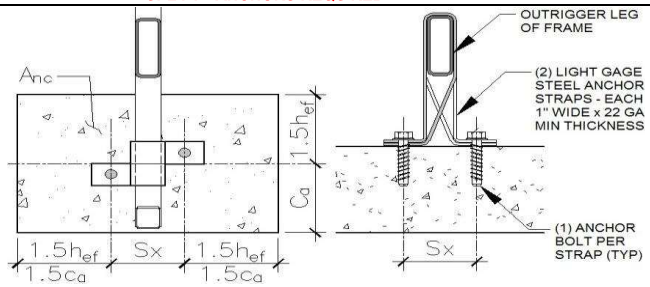

Anchor Design (using "Cracked Concrete" Properties)

Try: 3/8" DIA Hilti Kwik Bolt-TZ2 (CS) Anchor - 2 1/2" embed.

Embedment =	2.5 in	
f'_c =	3500 psi	
e_h' =	0 in	<--- Eccen. Of Anchor
h_{ef} =	2 in	$1.5(h_{ef})$ = 3.000 in
c_a =	3.5 in	$1.5(c_a)$ = 5.250 in
Conc. thickness, t =	4 in	
# of Anchors, n =	2	- anchors per connection
S_X =	2.5 in	
A_{se} =	0.051 in^2	

Tension Allowables

Steel Strength, ϕN_{sa} =	8437 lbs	<--ACI 318-14 Eq 17.4.1.2		
Concrete Breakout, $(0.75)\phi N_{cbq}$ =	2427 lbs	<--ACI 318-14 Eq 17.4.2.1b		
Pullout Strength, $(0.75)\phi N_{pn}$ =	NA	<--ACI 318-14 Eq 17.4.3.1		
	LC #1		LC #2	
Factored Tension Load (N_u) =	391 lbs		313 lbs	
max tension stress ratio (TSR) =	0.161	OK	0.129	OK

Shear Allowables

Steel Strength, ϕV_{sa} =	4062 lbs	<--ACI 318-14 Eq 17.5.1.2c
Concrete breakout, ϕV_{cbq} =	1533 lbs	<--ACI 318-14 Eq 17.5.2.1b
Concrete pryout, ϕV_{cpq} =	3485 lbs	<--ACI 318-14 Eq 17.5.3.1b

	LC #1		LC #2	
Factored Shear Load (V_u) =	74 lbs		47 lbs	
Max shear stress ratio (VSR) =	0.048	OK	0.031	OK
Combined shear and tension stress ratio (TSR + VSR) =	0.209	< 1.2 OK - LC#1 (controls)		

USE: (2) 3/8" DIA Hilti Kwik Bolt-TZ2 (CS) Anchor - 2 1/2" embed. ICC REPORT #ESR-4266

JOHNSTON BURKHOLDER ASSOCIATES
consulting structural engineers
930 CENTRAL · KANSAS CITY, MO 64105
816.421.4200 · WWW.JBAENGR.COM

PROJECT NO:	SHEET NO:	OF:
2401802403	26	66
PROJECT NAME: #02403 - Puyallup, WA		
MADE BY: KSH	DATE: 04/19/24	
CHECKED BY:	DATE:	

Shelving / Single Sided 120" Tall "YZ" 4 Level 30YZ

IBC 2021 / ASCE 7-16 / 2016 RMI (ANSI/MH16.3-16)

Punching Shear Check:
(Design per ACI 318-14 section 14.5.5)

Max. Factored Vertical Load (P_u) =	595	lbs
Slab Concrete f '$_c$ =	3500	psi
Slab thickness (t) =	4	in.
Rack Post X-X =	2	in.
Rack Post Y-Y =	2	in.
b_o =	24.00	in.
β =	1.00	
V_n =	22718	lbs Eq. (22-10)
V_n max =	15107	lbs Eq. (22-10)
ϕV_n =	9064.38	lbs
$V_u/\phi V_n$ =	0.066	< 1.0 O.K.

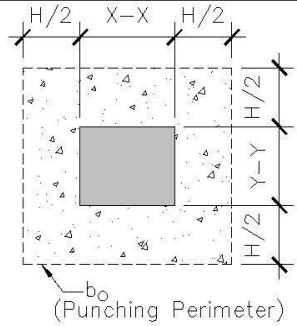

Slab tension based on Soil bearing area check:

Allowable soil bearing =	1500	psf
Max. Vertical Load (Service) (P) =	312	lbs
Area reqd. for bearing (A_{reqd}) =	0.21	ft^2
"b" distance =	5.47	in
Slab thickness (t) =	4.00	in
S = (1")$(t)^2$/6 =	2.67	in^3/in
ϕM_{nt} (tension allowable) = $\phi_t(7.5)[(f'_c)^{1/2}](S)$ =	710	in-lb/in
Factored uniform bearing, $w_u = P_u / A_{reqd}$ =	20	lb/in/in
$M_u = w_u L^2/3 = (w_u)[(b-(2''))/2)^2] / 3$ =	19.97	in-lb/in - Defl. End M1 = 10 in-lb/in
$M_u/\phi M_{nt}$ =	0.028	< 1.0 O.K.

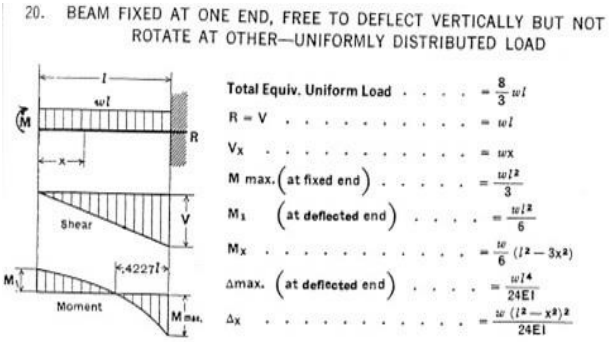

Shelving Fixture FOS Overturning with Resistance from Effective Weight of Slab on Grade:

Width of Single Rack =	21	in
Slab thickness (t) =	4.0	in
Modulus of Rupture, f_r = 7.5*SQRT(f'c) =	443.7	psi
Concrete Slab Section Modulus, S = $b(t)^2$/6 =	32.0	in^3/ft
Allowable Concrete Slab Bending Moment, $M_{all}/FS = S*f_r/1.5$ =	1183.2	ft*lbs/ft
Effective Cantilever Span Length (L_c) at M_{all} =	6.9	ft
Total Length of Slab (l_c + Width of Single Rack) =	8.6	ft
Trib. Width of Slab = Trib width of Rack =	4.0	ft
Weight of Concrete Slab at Rack (P_{conc}) =	1726	lbs
Resisting Moment - Concrete Slab at Rack, $M_{RST(slab)} = P_{conc} * L_c/2$ =	89364	in*lbs
Load Combination #1: M_{OT} =	3677	in*lbs
$M_{RST(Rack)} + M_{RST(slab)}$ =	92514	in*lbs
Total Overturning FOS =	25.157	OK
Load Combination #2: M_{OT} =	2771	in*lbs
$M_{RST(Rack)} + M_{RST(slab)}$ =	91201	in*lbs
Total Overturning FOS =	32.913	OK

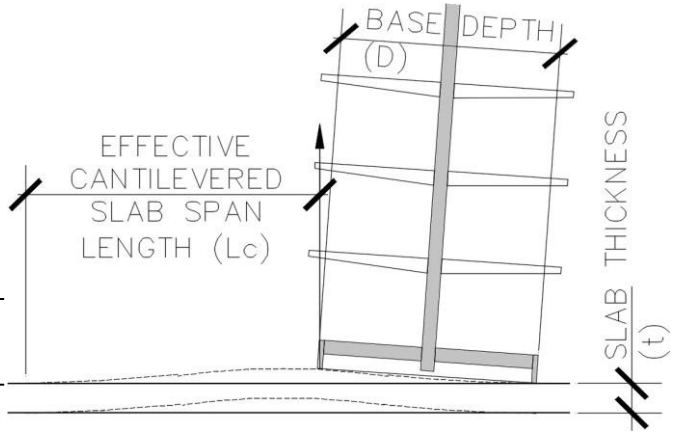

JOHNSTON BURKHOLDER ASSOCIATES
consulting structural engineers
930 CENTRAL · KANSAS CITY, MO 64105
816.421.4200 · WWW.JBAENGR.COM

PROJECT NO: 2401802403	SHEET NO: 27	OF: 66	
PROJECT NAME: #02403 - Puyallup, WA			
MADE BY: KSH	DATE: 04/19/24		
CHECKED BY:	DATE:		

Shelving / Single Sided — 78" Tall "V" 5 Level — 36V

IBC 2021 / ASCE 7-16 / 2016 RMI (ANSI/MH16.3-16)

Seismic Importance Factor =	1.5	
Supported on Elevated Floor (Y/N):	No	
Total Load per shelf =	150 lbs	
# of Levels =	Wall 5 Level	
Uniform Weight per level =	12.50 psf/shelf	
Weight of Unit =	100 lbs	
Anchorage spacing/Trib width =	4 ft	*(Frames are assumed to be 4'-0" oc)*
Shelf depth =	36 in	Shelf Load / Level
h_9 =	0 in	
h_8 =	0 in	
h_7 =	0 in	
h_6 =	0 in	
h_5 =	18 in	150 lbs
h_4 =	18 in	150 lbs
h_3 =	18 in	150 lbs
h_2 =	18 in	150 lbs
h_1 =	6 in	150 lbs
Total Shelf Height, H_t =	78 in	
Unit Height, H_u =	78 in	
Unit Base Depth, D =	27 in	

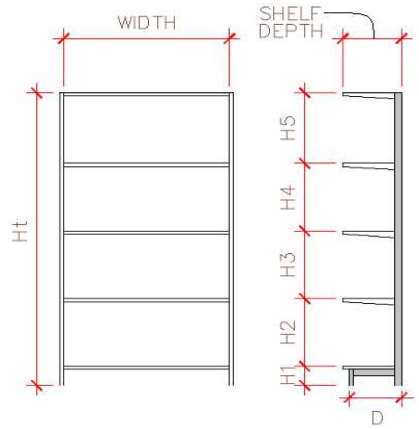

Overturning Stability (Load cases are per ASCE 7 sect. 15.5.3.6):

Load Case 1* [per RMI sect. 2.6.8(1) - PL=0.67(PL)]
[per RMI sect. 2.6.2, PL_{RF} = 1.0]

Seismic $(C_s)(I_p)$ =	0.315	W_s (Cross-Aisle)
$W_s = (0.67)(PL_{RF})((0.67)PL)+DL$ =	436.7 lbs	
Base Shear, $V = C_s I_p W_s$ =	137.7 lbs	
Horizontal forces per level, $F_x = C_{vx}V$ (RMI sect 2.6.6)		
(Service Loads, E = 0.7) F_9 =	0.0 lbs	@ 0 in (CM)
F_8 =	0.0 lbs	@ 0 in (CM)
F_7 =	0.0 lbs	@ 0 in (CM)
F_6 =	0.0 lbs	@ 0 in (CM)
F_5 =	29.0 lbs	@ 84 in (CM)
F_4 =	22.8 lbs	@ 66 in (CM)
F_3 =	16.6 lbs	@ 48 in (CM)
F_2 =	10.4 lbs	@ 30 in (CM)
F_1 =	4.1 lbs	@ 12 in (CM)
F_u =	13.4 lbs	@ 39 in (CM)
Σf_i =	137.7 lbs	(@ Factored Loads)
Calculate Overturning Moment (Service), $M_{OT} = \Sigma f_i h_i$		
M_{OT} =	5627 in-lbs	
Calculate Resisting Moment (Service), M_{RST}		
M_{RST} =	8100 in-lbs	
Factor of Safety		
FOS =	1.440	

Note: (CM) = Product Center of Mass typically 6 inches above the top of shelf at each level.

NO UPLIFT - ANCHORS REQUIRED

Load Case 2* [per RMI sect. 2.6.8(2) - PL=1.0(PL)]
[per RMI sect. 2.6.2, PL_{RF} = 1.0]

Seismic $(C_s)(I_p)$ =	0.315	W_s (Cross-Aisle)
$W_s = (0.67)(PL_{RF})((1)PL)+DL$ =	200.5 lbs	
Base Shear, $V = C_s I_p W_s$ =	63.2 lbs	
Horizontal forces per level, $F_x = C_{vx}V$ (RMI sect 2.6.6)		
(Service Loads) F_9 =	0.0 lbs	
F_8 =	0.0 lbs	
F_7 =	0.0 lbs	
F_6 =	0.0 lbs	
F_5 =	33.8 lbs	@ 84in (CM)
F_4 =	0.0 lbs	
F_3 =	0.0 lbs	
F_2 =	0.0 lbs	
F_1 =	0.0 lbs	
F_u =	10.5 lbs	@ 39in (CM)
Σf_i =	63.2 lbs	(@ Factored Loads)
Calculate Overturning Moment (Service), $M_{OT} = \Sigma f_i h_i$		
M_{OT} =	3247 in-lbs	
Calculate Resisting Moment (Service), M_{RST}		
M_{RST} =	3375 in-lbs	
Factor of Safety		
FOS =	1.039	

NO UPLIFT - ANCHORS REQUIRED

Base Reactions:

Reactions (Service Loads):	LC #1		LC #2	
R_h =	48 lbs		22 lbs	
R_v =	0 lbs	(No Uplift)	0 lbs	(No Uplift)
Overturning FOS =	1.440	< 1.5--ABs Reqd	1.039	<1.5--ABs Reqd
Sliding Restraint force, R_{RST} / FOS =	107lbs / 2.213 >= 1.5 OK		55lbs / 2.491 >= 1.5 OK	
Reactions (Factored Loads):	**LC #1**		**LC #2**	
Base Shear (R_{uh}) =	138 lbs		63 lbs	
Net Uplift (R_{uv}) =	0 lbs		0 lbs	
Overturning + Gravity (P_u) =	895 lbs		401 lbs	

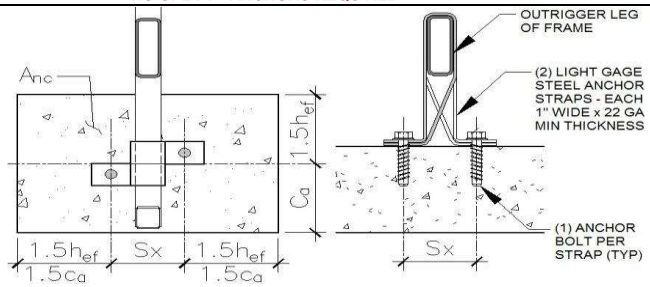

Anchor Design (using "Cracked Concrete" Properties)

Try: 3/8" DIA Hilti Kwik Bolt-TZ2 (CS) Anchor - 2 1/2" embed.

Embedment =	2.5 in	
f'_c =	3500 psi	
e_n' =	0 in	<--- Eccen. Of Anchor
h_{ef} =	2 in	$1.5(h_{ef})$ = 3.000 in
c_a =	3.5 in	$1.5(c_a)$ = 5.250 in
Conc. thickness, t =	4 in	
# of Anchors, n =	2	- anchors per connection
S_X =	2.5 in	
A_{se} =	0.051 in^2	

Tension Allowables

Steel Strength, ϕN_{sa} =	8437 lbs	<--ACI 318-14 Eq 17.4.1.2		
Concrete Breakout, $(0.75)\phi N_{cbq}$ =	2427 lbs	<--ACI 318-14 Eq 17.4.2.1b		
Pullout Strength, $(0.75)\phi N_{pn}$ =	NA	<--ACI 318-14 Eq 17.4.3.1		
	LC #1		LC #2	
Factored Tension Load (N_u) =	0 lbs		0 lbs	
max tension stress ratio (TSR) =	0.000	OK	0.000	OK

Shear Allowables

Steel Strength, ϕV_{sa} =	4062 lbs	<--ACI 318-14 Eq 17.5.1.2c		
Concrete breakout, ϕV_{cbq} =	1533 lbs	<--ACI 318-14 Eq 17.5.2.1b		
Concrete pryout, ϕV_{cpq} =	3485 lbs	<--ACI 318-14 Eq 17.5.3.1b		
	LC #1		LC #2	
Factored Shear Load (V_u) =	138 lbs		63 lbs	
Max shear stress ratio (VSR) =	0.090	OK	0.041	OK
Combined shear and tension stress ratio (TSR + VSR) =	0.090	< 1.2 OK - LC#1 (controls)		

USE: (2) 3/8" DIA Hilti Kwik Bolt-TZ2 (CS) Anchor - 2 1/2" embed. ICC REPORT #ESR-4266

JOHNSTON BURKHOLDER ASSOCIATES
consulting structural engineers
930 CENTRAL · KANSAS CITY, MO 64105
816.421.4200 · WWW.JBAENGR.COM

PROJECT NO:	SHEET NO:	OF:
2401802403	28	66
PROJECT NAME: #02403 - Puyallup, WA		
MADE BY: KSH	DATE: 04/19/24	
CHECKED BY:	DATE:	

Shelving / Single Sided 78" Tall "V" 5 Level 36V

IBC 2021 / ASCE 7-16 / 2016 RMI (ANSI/MH16.3-16)

Punching Shear Check:
(Design per ACI 318-14 section 14.5.5)

Max. Factored Vertical Load (P_u) =	895	lbs
Slab Concrete f '$_c$ =	3500	psi
Slab thickness (t) =	4	in.
Rack Post X-X =	2	in.
Rack Post Y-Y =	2	in.
b_o =	24.00	in.
β =	1.00	
V_n =	22718	lbs Eq. (22-10)
V_n max =	15107	lbs Eq. (22-10)
ϕV_n =	9064.38	lbs
$V_u/\phi V_n$ =	0.099	< 1.0 O.K.

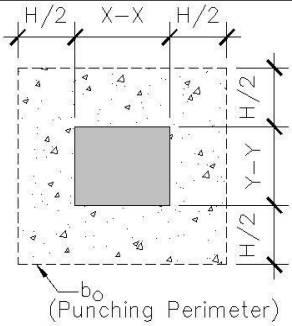

Slab tension based on Soil bearing area check:

Allowable soil bearing =	1500	psf
Max. Vertical Load (Service) (P) =	525	lbs
Area reqd. for bearing (A_{reqd}) =	0.35	ft^2
"b" distance =	7.10	in
Slab thickness (t) =	4.00	in
S = (1")(t)^2/6 =	2.67	in^3/in
ϕM_{nt} (tension allowable) = $\phi_t(7.5)[(f'_c)^{1/2}](S)$ =	710	in-lb/in
Factored uniform bearing, $w_u = P_u / A_{reqd}$ =	18	lb/in/in
$M_u = w_u L^2/3 = (w_u)[(b-(2''))/2)^2] / 3$ =	38.48	in-lb/in - Defl. End M1 = 20 in-lb/in
$M_u/\phi M_{nt}$ =	0.054	< 1.0 O.K.

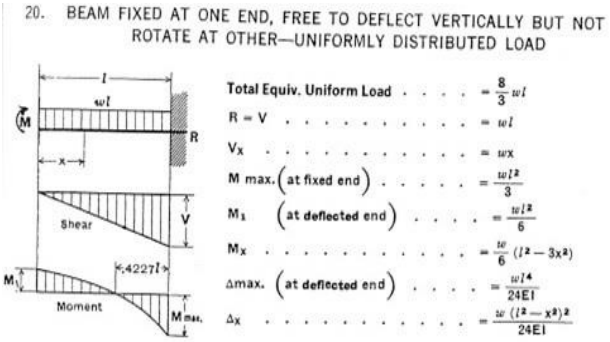

Shelving Fixture FOS Overturning with Resistance from Effective Weight of Slab on Grade:

Width of Single Rack =	27	in
Slab thickness (t) =	4.0	in
Modulus of Rupture, f_r = 7.5*SQRT(f'c) =	443.7	psi
Concrete Slab Section Modulus, S = b(t)^2/6 =	32.0	in^3/ft
Allowable Concrete Slab Bending Moment, $M_{all}/FS = S*f_r/1.5$ =	1183.2	ft*lbs/ft
Effective Cantilever Span Length (L_c) at M_{all} =	6.9	ft
Total Length of Slab (l_c + Width of Single Rack) =	9.1	ft
Trib. Width of Slab = Trib width of Rack =	4.0	ft
Weight of Concrete Slab at Rack (P_{conc}) =	1826	lbs
Resisting Moment - Concrete Slab at Rack, $M_{RST(slab)} = P_{conc} * L_c/2$ =	100019	in*lbs
Load Combination #1: M_{OT} =	5627	in*lbs
$M_{RST(Rack)} + M_{RST(slab)}$ =	108119	in*lbs
Total Overturning FOS =	19.215	OK
Load Combination #2: M_{OT} =	3247	in*lbs
$M_{RST(Rack)} + M_{RST(slab)}$ =	103394	in*lbs
Total Overturning FOS =	31.840	OK

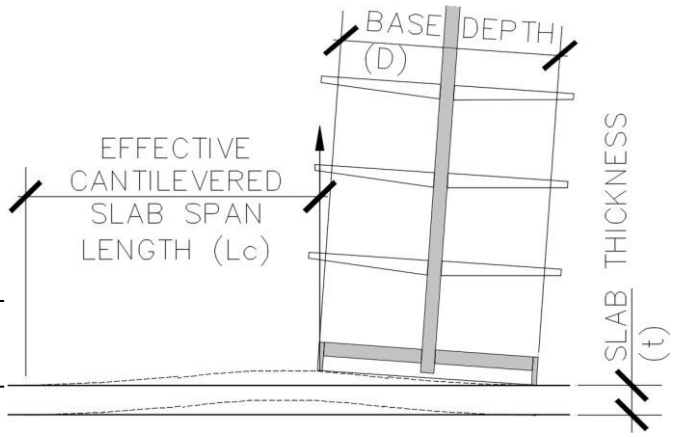

JOHNSTON BURKHOLDER ASSOCIATES
consulting structural engineers
930 CENTRAL · KANSAS CITY, MO 64105
816.421.4200 · WWW.JBAENGR.COM

PROJECT NO: 2401802403	SHEET NO: 29	OF: 66
PROJECT NAME: #02403 - Puyallup, WA		
MADE BY: KSH	DATE: 04/19/24	
CHECKED BY:	DATE:	

Shelving / Single Sided | 90" Tall "EC" 5 Level | 2490 EC

IBC 2021 / ASCE 7-16 / 2016 RMI (ANSI/MH16.3-16)

Seismic Importance Factor =	1.5		
Supported on Elevated Floor (Y/N):	No		
Total Load per shelf =	100 lbs		
# of Levels =	Wall 5 Level		
Uniform Weight per level =	12.50 psf/shelf		
Weight of Unit =	100 lbs		
Anchorage spacing/Trib width =	4 ft	(*Frames are assumed to be 4'-0" oc*)	
Shelf depth =	24 in		Shelf Load / Level
h_9 =	0 in		
h_8 =	0 in		
h_7 =	0 in		
h_6 =	0 in		
h_5 =	21 in		100 lbs
h_4 =	21 in		100 lbs
h_3 =	21 in		100 lbs
h_2 =	21 in		100 lbs
h_1 =	6 in		100 lbs
Total Shelf Height, H_t =	90 in		
Unit Height, H_u =	90 in		
Unit Base Depth, D =	15 in		

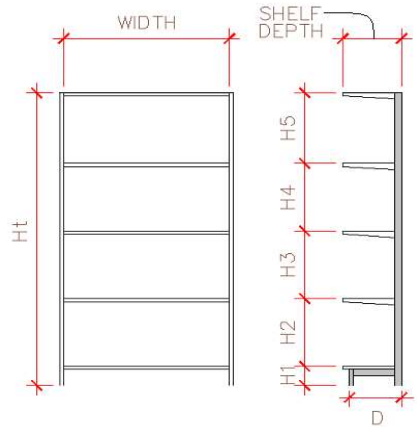

Overturning Stability (Load cases are per ASCE 7 sect. 15.5.3.6):

Load Case 1* [per RMI sect. 2.6.8(1) - PL=0.67(PL)]
[per RMI sect. 2.6.2, PL_{RF} = 1.0]

Seismic $(C_s)(I_p)$ =	0.315	W_s (Cross-Aisle)
$W_s = (0.67)(PL_{RF})((0.67)PL)+DL$ =	324.5 lbs	
Base Shear, $V = C_sI_pW_s$ =	102.3 lbs	
Horizontal forces per level, $F_x = C_{vx}V$ (RMI sect 2.6.6)		
(Service Loads, E = 0.7) F_9 =	0.0 lbs	@ 0 in (CM)
F_8 =	0.0 lbs	@ 0 in (CM)
F_7 =	0.0 lbs	@ 0 in (CM)
F_6 =	0.0 lbs	@ 0 in (CM)
F_5 =	20.4 lbs	@ 96 in (CM)
F_4 =	15.9 lbs	@ 75 in (CM)
F_3 =	11.5 lbs	@ 54 in (CM)
F_2 =	7.0 lbs	@ 33 in (CM)
F_1 =	2.5 lbs	@ 12 in (CM)
F_u =	14.3 lbs	@ 45 in (CM)
Σf_i =	102.3 lbs	(@ Factored Loads)
Calculate Overturning Moment (Service), $M_{OT} = \Sigma f_i h_i$		
M_{OT} =	4676 in-lbs	
Calculate Resisting Moment (Service), M_{RST}		
M_{RST} =	3250 in-lbs	
Factor of Safety		
FOS =	0.695	

Note: (CM) = Product Center of Mass typically 6 inches above the top of shelf at each level.

UPLIFT - ANCHORS REQUIRED

Load Case 2* [per RMI sect. 2.6.8(2) - PL=1.0(PL)]
[per RMI sect. 2.6.2, PL_{RF} = 1.0]

Seismic $(C_s)(I_p)$ =	0.315	W_s (Cross-Aisle)
$W_s = (0.67)(PL_{RF})((1)PL)+DL$ =	167.0 lbs	
Base Shear, $V = C_sI_pW_s$ =	52.7 lbs	
Horizontal forces per level, $F_x = C_{vx}V$ (RMI sect 2.6.6)		
(Service Loads) F_9 =	0.0 lbs	
F_8 =	0.0 lbs	
F_7 =	0.0 lbs	
F_6 =	0.0 lbs	
F_5 =	25.1 lbs	@ 96in (CM)
F_4 =	0.0 lbs	
F_3 =	0.0 lbs	
F_2 =	0.0 lbs	
F_1 =	0.0 lbs	
F_u =	11.8 lbs	@ 45in (CM)
Σf_i =	52.7 lbs	(@ Factored Loads)
Calculate Overturning Moment (Service), $M_{OT} = \Sigma f_i h_i$		
M_{OT} =	2939 in-lbs	
Calculate Resisting Moment (Service), M_{RST}		
M_{RST} =	1500 in-lbs	
Factor of Safety		
FOS =	0.510	

UPLIFT - ANCHORS REQUIRED

Base Reactions:

Reactions (Service Loads):	LC #1		LC #2	
R_h =	36 lbs		18 lbs	
R_v =	95 lbs	(Uplift)	96 lbs	(Uplift)
Overturning FOS =	0.695	< 1.5--ABs Reqd	0.510	<1.5--ABs Reqd
Sliding Restraint force, R_{RST} / FOS =	118lbs / 3.309 >= 1.5 OK		70lbs / 3.79 >= 1.5 OK	
Reactions (Factored Loads):	**LC #1**		**LC #2**	
Base Shear (R_{uh}) =	102 lbs		53 lbs	
Net Uplift (R_{uv}) =	732 lbs		487 lbs	
Overturning + Gravity (P_u) =	988 lbs		537 lbs	

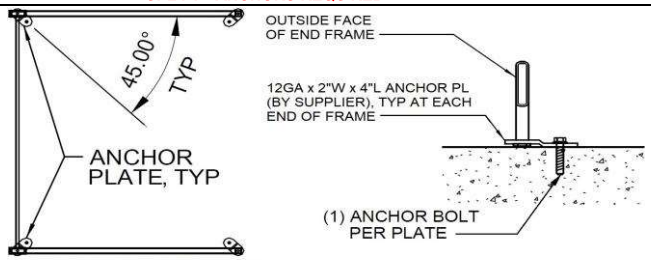

END CAP PLAN VIEW

Anchor Design (using "Cracked Concrete" Properties)

Try: 3/8" DIA Hilti Kwik Bolt-TZ2 (CS) Anchor - 2 1/2" embed.

Embedment =	2.5 in	
f'_c =	3500 psi	
e_n' =	0 in	<--- Eccen. Of Anchor
h_{ef} =	2 in	$1.5(h_{ef})$ = 3.000 in
c_a =	3.5 in	$1.5(c_a)$ = 5.250 in
Conc. thickness, t =	4 in	
# of Anchors, n =	1	- anchors per connection
S_X =	0 in	
A_{se} =	0.051 in^2	

Tension Allowables

Steel Strength, ϕN_{sa} =	4219 lbs	<--ACI 318-14 Eq 17.4.1.2		
Concrete Breakout, $(0.75)\phi N_{cbq}$ =	1713 lbs	<--ACI 318-14 Eq 17.4.2.1a		
Pullout Strength, $(0.75)\phi N_{pn}$ =	NA	<--ACI 318-14 Eq 17.4.3.1		
	LC #1		LC #2	
Factored Tension Load (N_u) =	732 lbs		487 lbs	
max tension stress ratio (TSR) =	0.427	OK	0.284	OK

Shear Allowables

Steel Strength, ϕV_{sa} =	2031 lbs	<--ACI 318-14 Eq 17.5.1.2c		
Concrete breakout, ϕV_{cbq} =	1238 lbs	<--ACI 318-14 Eq 17.5.2.1b		
Concrete pryout, ϕV_{cpq} =	2460 lbs	<--ACI 318-14 Eq 17.5.3.1b		
	LC #1		LC #2	
Factored Shear Load (V_u) =	102 lbs		53 lbs	
Max shear stress ratio (VSR) =	0.083	OK	0.043	OK
Combined shear and tension stress ratio (TSR + VSR) =	0.510	< 1.2 OK - LC#1 (controls)		

USE: (1) 3/8" DIA Hilti Kwik Bolt-TZ2 (CS) Anchor - 2 1/2" embed. ICC REPORT #ESR-4266

JOHNSTON BURKHOLDER ASSOCIATES
consulting structural engineers
930 CENTRAL · KANSAS CITY, MO 64105
816.421.4200 · WWW.JBAENGR.COM

PROJECT NO:	SHEET NO:	OF:
2401802403	30	66
PROJECT NAME: #02403 - Puyallup, WA		
MADE BY: KSH	DATE: 04/19/24	
CHECKED BY:	DATE:	

Shelving / Single Sided 90" Tall "EC" 5 Level 2490 EC

IBC 2021 / ASCE 7-16 / 2016 RMI (ANSI/MH16.3-16)

Punching Shear Check:
(Design per ACI 318-14 section 14.5.5)

Max. Factored Vertical Load (P_u) =	988	lbs
Slab Concrete f'_c =	3500	psi
Slab thickness (t) =	4	in.
Rack Post X-X =	2	in.
Rack Post Y-Y =	2	in.
b_o =	24.00	in.
β =	1.00	
V_n =	22718	lbs Eq. (22-10)
V_n max =	15107	lbs Eq. (22-10)
ϕV_n =	9064.38	lbs
$V_u/\phi V_n$ =	0.109	< 1.0 O.K.

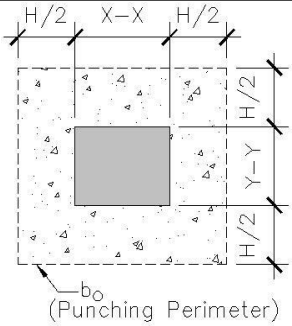

Slab tension based on Soil bearing area check:

Allowable soil bearing =	1500	psf
Max. Vertical Load (Service) (P) =	498	lbs
Area reqd. for bearing (A_{reqd}) =	0.33	ft^2
"b" distance =	6.91	in
Slab thickness (t) =	4.00	in
S = (1")$(t)^2$/6 =	2.67	in^3/in
ϕM_{nt} (tension allowable) = $\phi_t(7.5)[(f'_c)^{1/2}](S)$ =	710	in-lb/in
Factored uniform bearing, $w_u = P_u / A_{reqd}$ =	21	lb/in/in
$M_u = w_u L^2/3 = (w_u)[(b-(2"))/2)^2] / 3$ =	41.59	in-lb/in - Defl. End M1 = 21 in-lb/in
$M_u/\phi M_{nt}$ =	0.059	< 1.0 O.K.

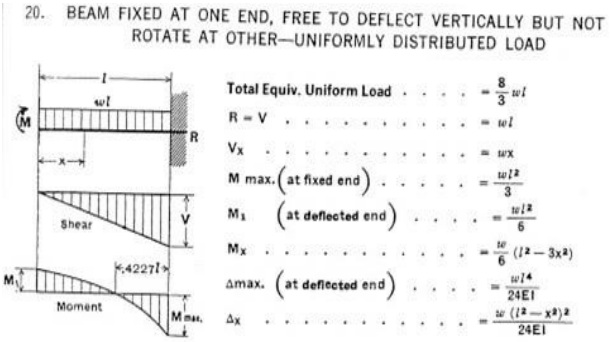

Shelving Fixture FOS Overturning with Resistance from Effective Weight of Slab on Grade:

Width of Single Rack =	15	in
Slab thickness (t) =	4.0	in
Modulus of Rupture, f_r = 7.5*SQRT(f'c) =	443.7	psi
Concrete Slab Section Modulus, S = $b(t)^2/6$ =	32.0	in^3/ft
Allowable Concrete Slab Bending Moment, $M_{all}/FS = S*f_r/1.5$ =	1183.2	ft*lbs/ft
Effective Cantilever Span Length (L_c) at M_{all} =	6.9	ft
Total Length of Slab (l_c + Width of Single Rack) =	8.1	ft
Trib. Width of Slab = Trib width of Rack =	4.0	ft
Weight of Concrete Slab at Rack (P_{conc}) =	1626	lbs
Resisting Moment - Concrete Slab at Rack, $M_{RST(slab)} = P_{conc} * L_c/2$ =	79308	in*lbs
Load Combination #1: M_{OT} =	4676	in*lbs
$M_{RST(Rack)} + M_{RST(slab)}$ =	82558	in*lbs
Total Overturning FOS =	17.655	OK
Load Combination #2: M_{OT} =	2939	in*lbs
$M_{RST(Rack)} + M_{RST(slab)}$ =	80808	in*lbs
Total Overturning FOS =	27.493	OK

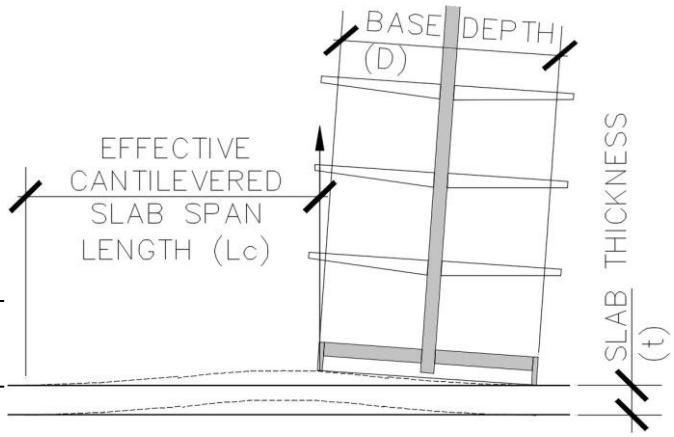

JOHNSTON BURKHOLDER ASSOCIATES
consulting structural engineers
930 CENTRAL · KANSAS CITY, MO 64105
816.421.4200 · WWW.JBAENGR.COM

PROJECT NO: 2401802403	SHEET NO: 31	OF: 66	
PROJECT NAME: #02403 - Puyallup, WA			
MADE BY: KSH	DATE: 04/19/24		
CHECKED BY:	DATE:		

Shelving / Single Sided | 78" Tall "EC" 5 Level | 3678 EC

IBC 2021 / ASCE 7-16 / 2016 RMI (ANSI/MH16.3-16)

Seismic Importance Factor =	1.5		
Supported on Elevated Floor (Y/N):	No		
Total Load per shelf =	100 lbs		
# of Levels =	Wall 5 Level		
Uniform Weight per level =	8.33 psf/shelf		
Weight of Unit =	100 lbs		
Anchorage spacing/Trib width =	4 ft	(*Frames are assumed to be 4'-0" oc*)	
Shelf depth =	36 in		Shelf Load / Level
h_9 =	0 in		
h_8 =	0 in		
h_7 =	0 in		
h_6 =	0 in		
h_5 =	18 in		100 lbs
h_4 =	18 in		100 lbs
h_3 =	18 in		100 lbs
h_2 =	18 in		100 lbs
h_1 =	6 in		100 lbs
Total Shelf Height, H_t =	78 in		
Unit Height, H_u =	78 in		
Unit Base Depth, D =	27 in		

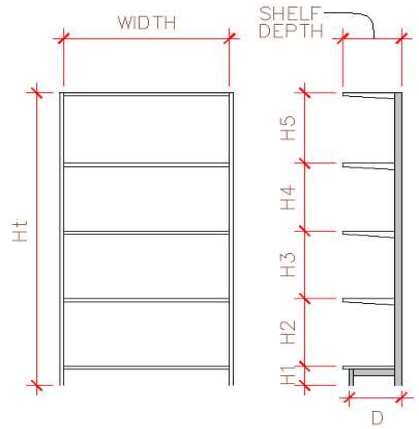

Overturning Stability (Load cases are per ASCE 7 sect. 15.5.3.6):

Load Case 1* [per RMI sect. 2.6.8(1) - PL=0.67(PL)]
[per RMI sect. 2.6.2, PL_{RF} = 1.0]

Seismic $(C_s)(I_p)$ =	0.315	W_s (Cross-Aisle)
$W_s = (0.67)(PL_{RF})((0.67)PL)+DL$ =	324.5 lbs	
Base Shear, $V = C_sI_pW_s$ =	102.3 lbs	

Horizontal forces per level, $F_x = C_{vx}V$ (RMI sect 2.6.6)

(Service Loads, E = 0.7)

F_9 =	0.0 lbs	@ 0 in (CM)
F_8 =	0.0 lbs	@ 0 in (CM)
F_7 =	0.0 lbs	@ 0 in (CM)
F_6 =	0.0 lbs	@ 0 in (CM)
F_5 =	20.2 lbs	@ 84 in (CM)
F_4 =	15.9 lbs	@ 66 in (CM)
F_3 =	11.5 lbs	@ 48 in (CM)
F_2 =	7.2 lbs	@ 30 in (CM)
F_1 =	2.9 lbs	@ 12 in (CM)
F_u =	14.0 lbs	@ 39 in (CM)
Σf_i =	102.3 lbs	(@ Factored Loads)

Note: (CM) = Product Center of Mass typically 6 inches above the top of shelf at each level.

Calculate Overturning Moment (Service), $M_{OT} = \Sigma f_i h_i$
M_{OT} = 4090 in-lbs
Calculate Resisting Moment (Service), M_{RST}
M_{RST} = 5850 in-lbs
Factor of Safety
FOS = 1.430
NO UPLIFT - ANCHORS REQUIRED

Load Case 2* [per RMI sect. 2.6.8(2) - PL=1.0(PL)]
[per RMI sect. 2.6.2, PL_{RF} = 1.0]

Seismic $(C_s)(I_p)$ =	0.315	W_s (Cross-Aisle)
$W_s = (0.67)(PL_{RF})((1)PL)+DL$ =	167.0 lbs	
Base Shear, $V = C_sI_pW_s$ =	52.7 lbs	

Horizontal forces per level, $F_x = C_{vx}V$ (RMI sect 2.6.6)

(Service Loads)

F_9 =	0.0 lbs	
F_8 =	0.0 lbs	
F_7 =	0.0 lbs	
F_6 =	0.0 lbs	
F_5 =	25.2 lbs	@ 84in (CM)
F_4 =	0.0 lbs	
F_3 =	0.0 lbs	
F_2 =	0.0 lbs	
F_1 =	0.0 lbs	
F_u =	11.7 lbs	@ 39in (CM)
Σf_i =	52.7 lbs	(@ Factored Loads)

Calculate Overturning Moment (Service), $M_{OT} = \Sigma f_i h_i$
M_{OT} = 2571 in-lbs
Calculate Resisting Moment (Service), M_{RST}
M_{RST} = 2700 in-lbs
Factor of Safety
FOS = 1.050
NO UPLIFT - ANCHORS REQUIRED

Base Reactions:

Reactions (Service Loads):	LC #1		LC #2	
R_h =	36 lbs		18 lbs	
R_v =	0 lbs	(No Uplift)	0 lbs	(No Uplift)
Overturning FOS =	1.430	< 1.5--ABs Reqd	1.050	<1.5--ABs Reqd
Sliding Restraint force, R_{RST} / FOS =	78lbs / 2.19 >= 1.5 OK		45lbs / 2.424 >= 1.5 OK	
Reactions (Factored Loads):	**LC #1**		**LC #2**	
Base Shear (R_{uh}) =	102 lbs		53 lbs	
Net Uplift (R_{uv}) =	0 lbs		0 lbs	
Overturning + Gravity (P_u) =	646 lbs		322 lbs	

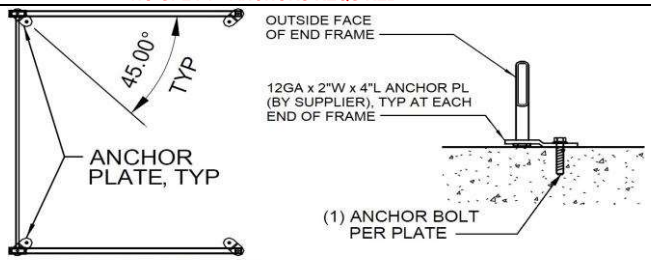

END CAP PLAN VIEW

Anchor Design (using "Cracked Concrete" Properties)

Try: 3/8" DIA Hilti Kwik Bolt-TZ2 (CS) Anchor - 2 1/2" embed.

Embedment =	2.5 in	
f'_c =	3500 psi	
e_n' =	0 in	<--- Eccen. Of Anchor
h_{ef} =	2 in	$1.5(h_{ef})$ = 3.000 in
c_a =	3.5 in	$1.5(c_a)$ = 5.250 in
Conc. thickness, t =	4 in	
# of Anchors, n =	1	- anchors per connection
S_X =	0 in	
A_{se} =	0.051 in^2	

Tension Allowables

Steel Strength, ϕN_{sa} =	4219 lbs	<--ACI 318-14 Eq 17.4.1.2
Concrete Breakout, $(0.75)\phi N_{cbq}$ =	1713 lbs	<--ACI 318-14 Eq 17.4.2.1a
Pullout Strength, $(0.75)\phi N_{pn}$ =	NA	<--ACI 318-14 Eq 17.4.3.1

	LC #1		LC #2	
Factored Tension Load (N_u) =	0 lbs		0 lbs	
max tension stress ratio (TSR) =	0.000	OK	0.000	OK

Shear Allowables

Steel Strength, ϕV_{sa} =	2031 lbs	<--ACI 318-14 Eq 17.5.1.2c
Concrete breakout, ϕV_{cbq} =	1238 lbs	<--ACI 318-14 Eq 17.5.2.1b
Concrete pryout, ϕV_{cpq} =	2460 lbs	<--ACI 318-14 Eq 17.5.3.1b

	LC #1		LC #2	
Factored Shear Load (V_u) =	102 lbs		53 lbs	
Max shear stress ratio (VSR) =	0.083	OK	0.043	OK
Combined shear and tension stress ratio (TSR + VSR) =	0.083	< 1.2 OK - LC#1 (controls)		

USE: (1) 3/8" DIA Hilti Kwik Bolt-TZ2 (CS) Anchor - 2 1/2" embed. ICC REPORT #ESR-4266

JOHNSTON BURKHOLDER ASSOCIATES
consulting structural engineers
930 CENTRAL · KANSAS CITY, MO 64105
816.421.4200 · WWW.JBAENGR.COM

PROJECT NO:	SHEET NO:	OF:
2401802403	32	66
PROJECT NAME: #02403 - Puyallup, WA		
MADE BY: KSH	DATE: 04/19/24	
CHECKED BY:	DATE:	

Shelving / Single Sided 78" Tall "EC" 5 Level 3678 EC

IBC 2021 / ASCE 7-16 / 2016 RMI (ANSI/MH16.3-16)

Punching Shear Check:
(Design per ACI 318-14 section 14.5.5)

Max. Factored Vertical Load (P_u) =	646	lbs
Slab Concrete f'_c =	3500	psi
Slab thickness (t) =	4	in.
Rack Post X-X =	2	in.
Rack Post Y-Y =	2	in.
b_o =	24.00	in.
β =	1.00	
V_n =	22718	lbs Eq. (22-10)
V_n max =	15107	lbs Eq. (22-10)
ϕV_n =	9064.38	lbs
$V_u/\phi V_n$ =	0.071	< 1.0 O.K.

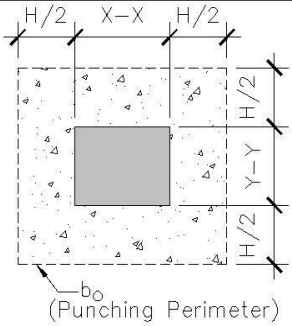

Slab tension based on Soil bearing area check:

Allowable soil bearing =	1500	psf
Max. Vertical Load (Service) (P) =	378	lbs
Area reqd. for bearing (A_{reqd}) =	0.25	ft^2
"b" distance =	6.02	in
Slab thickness (t) =	4.00	in
S = (1")$(t)^2$/6 =	2.67	in^3/in
ϕM_{nt} (tension allowable) = $\phi_t(7.5)[(f'_c)^{1/2}](S)$ =	710	in-lb/in
Factored uniform bearing, $w_u = P_u / A_{reqd}$ =	18	lb/in/in
$M_u = w_u L^2/3 = (w_u)[(b-(2"))/2)^2] / 3$ =	24.02	in-lb/in - Defl. End M1 = 13 in-lb/in
$M_u/\phi M_{nt}$ =	0.034	< 1.0 O.K.

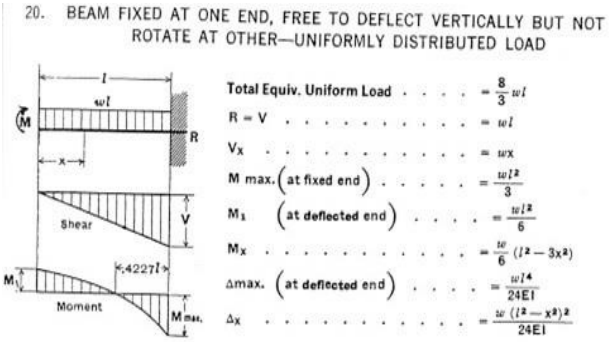

Shelving Fixture FOS Overturning with Resistance from Effective Weight of Slab on Grade:

Width of Single Rack =	27	in
Slab thickness (t) =	4.0	in
Modulus of Rupture, f_r = 7.5*SQRT(f'c) =	443.7	psi
Concrete Slab Section Modulus, S = $b(t)^2$/6 =	32.0	in^3/ft
Allowable Concrete Slab Bending Moment, $M_{all}/FS = S*f_r/1.5$ =	1183.2	ft*lbs/ft
Effective Cantilever Span Length (L_c) at M_{all} =	6.9	ft
Total Length of Slab (l_c + Width of Single Rack) =	9.1	ft
Trib. Width of Slab = Trib width of Rack =	4.0	ft
Weight of Concrete Slab at Rack (P_{conc}) =	1826	lbs
Resisting Moment - Concrete Slab at Rack, $M_{RST(slab)} = P_{conc} * L_c/2$ =	100019	in*lbs
Load Combination #1: M_{OT} =	4090	in*lbs
$M_{RST(Rack)} + M_{RST(slab)}$ =	105869	in*lbs
Total Overturning FOS =	25.882	OK
Load Combination #2: M_{OT} =	2571	in*lbs
$M_{RST(Rack)} + M_{RST(slab)}$ =	102719	in*lbs
Total Overturning FOS =	39.956	OK

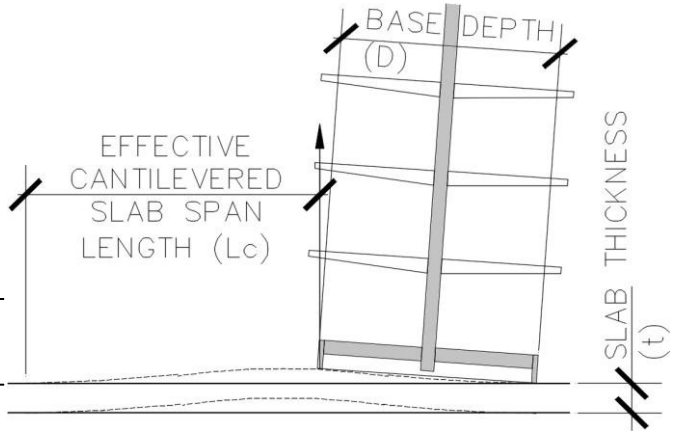

JOHNSTON BURKHOLDER ASSOCIATES
consulting structural engineers
930 CENTRAL · KANSAS CITY, MO 64105
816.421.4200 · WWW.JBAENGR.COM

PROJECT NO: 2401802403	SHEET NO: 33	OF: 66
PROJECT NAME: #02403 - Puyallup, WA		
MADE BY: KSH	DATE: 04/19/24	
CHECKED BY:	DATE:	

Shelving / Single Sided | 78" Tall "EC" 5 Level | 4878 EC

IBC 2021 / ASCE 7-16 / 2016 RMI (ANSI/MH16.3-16)

Seismic Importance Factor =	1.5		
Supported on Elevated Floor (Y/N):	No		
Total Load per shelf =	100 lbs		
# of Levels =	Wall 5 Level		
Uniform Weight per level =	6.25 psf/shelf		
Weight of Unit =	100 lbs		
Anchorage spacing/Trib width =	4 ft	(*Frames are assumed to be 4'-0" oc*)	
Shelf depth =	48 in		Shelf Load / Level
h_9 =	0 in		
h_8 =	0 in		
h_7 =	0 in		
h_6 =	0 in		
h_5 =	18 in		100 lbs
h_4 =	18 in		100 lbs
h_3 =	18 in		100 lbs
h_2 =	18 in		100 lbs
h_1 =	6 in		100 lbs
Total Shelf Height, H_t =	78 in		
Unit Height, H_u =	78 in		
Unit Base Depth, D =	39 in		

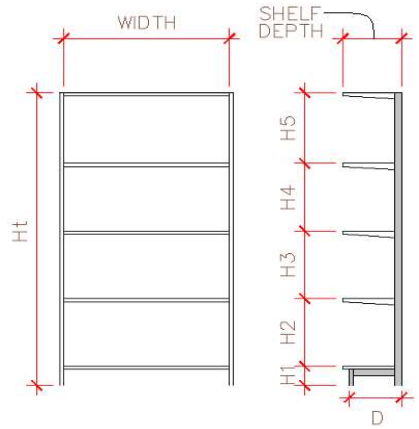

Overturning Stability (Load cases are per ASCE 7 sect. 15.5.3.6):

Load Case 1* [per RMI sect. 2.6.8(1) - PL=0.67(PL)]
[per RMI sect. 2.6.2, PL_{RF} = 1.0]

Seismic $(C_s)(I_p)$ =	0.315	W_s (Cross-Aisle)
$W_s = (0.67)(PL_{RF})((0.67)PL)+DL$ =	324.5 lbs	
Base Shear, $V = C_s I_p W_s$ =	102.3 lbs	
Horizontal forces per level, $F_x = C_{vx}V$ (RMI sect 2.6.6)		
(Service Loads, E = 0.7) F_9 =	0.0 lbs	@ 0 in (CM)
F_8 =	0.0 lbs	@ 0 in (CM)
F_7 =	0.0 lbs	@ 0 in (CM)
F_6 =	0.0 lbs	@ 0 in (CM)
F_5 =	20.2 lbs	@ 84 in (CM)
F_4 =	15.9 lbs	@ 66 in (CM)
F_3 =	11.5 lbs	@ 48 in (CM)
F_2 =	7.2 lbs	@ 30 in (CM)
F_1 =	2.9 lbs	@ 12 in (CM)
F_u =	14.0 lbs	@ 39 in (CM)
Σf_i =	102.3 lbs	(@ Factored Loads)
Calculate Overturning Moment (Service), $M_{OT} = \Sigma f_i h_i$		
M_{OT} =	4090 in-lbs	
Calculate Resisting Moment (Service), M_{RST}		
M_{RST} =	8450 in-lbs	
Factor of Safety		
FOS =	2.066	

Note: (CM) = Product Center of Mass typically 6 inches above the top of shelf at each level.

NO UPLIFT - NO ANCHORS REQUIRED

Load Case 2* [per RMI sect. 2.6.8(2) - PL=1.0(PL)]
[per RMI sect. 2.6.2, PL_{RF} = 1.0]

Seismic $(C_s)(I_p)$ =	0.315	W_s (Cross-Aisle)
$W_s = (0.67)(PL_{RF})((1)PL)+DL$ =	167.0 lbs	
Base Shear, $V = C_s I_p W_s$ =	52.7 lbs	
Horizontal forces per level, $F_x = C_{vx}V$ (RMI sect 2.6.6)		
(Service Loads) F_9 =	0.0 lbs	
F_8 =	0.0 lbs	
F_7 =	0.0 lbs	
F_6 =	0.0 lbs	
F_5 =	25.2 lbs	@ 84in (CM)
F_4 =	0.0 lbs	
F_3 =	0.0 lbs	
F_2 =	0.0 lbs	
F_1 =	0.0 lbs	
F_u =	11.7 lbs	@ 39in (CM)
Σf_i =	52.7 lbs	(@ Factored Loads)
Calculate Overturning Moment (Service), $M_{OT} = \Sigma f_i h_i$		
M_{OT} =	2571 in-lbs	
Calculate Resisting Moment (Service), M_{RST}		
M_{RST} =	3900 in-lbs	
Factor of Safety		
FOS =	1.517	

NO UPLIFT - NO ANCHORS REQUIRED

Base Reactions:

Reactions (Service Loads):	LC #1		LC #2	
R_h =	36 lbs		18 lbs	
R_v =	0 lbs	(No Uplift)	0 lbs	(No Uplift)
Overturning FOS =	2.066	>= 1.5	1.517	>= 1.5
Sliding Restraint force, R_{RST} / FOS =	67lbs / 1.865 >= 1.5 OK		37lbs / 2.026 >= 1.5 OK	
Reactions (Factored Loads):	**LC #1**		**LC #2**	
Base Shear (R_{uh}) =	102 lbs		53 lbs	
Net Uplift (R_{uv}) =	0 lbs		0 lbs	
Overturning + Gravity (P_u) =	547 lbs		260 lbs	

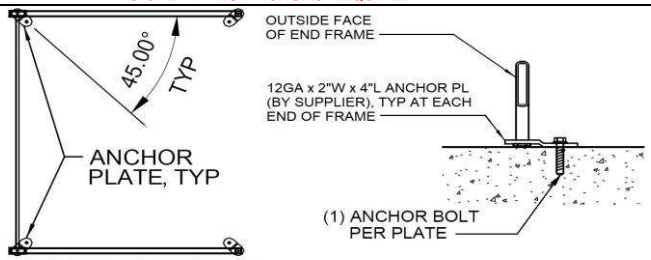

END CAP PLAN VIEW

Anchor Design (using "Cracked Concrete" Properties)

Try: 3/8" DIA Hilti Kwik Bolt-TZ2 (CS) Anchor - 2 1/2" embed.

Embedment =	2.5 in		
f'_c =	3500 psi		
e_h' =	0 in	<--- Eccen. Of Anchor	
h_{ef} =	2 in	$1.5(h_{ef})$ =	3.000 in
c_a =	3.5 in	$1.5(c_a)$ =	5.250 in
Conc. thickness, t =	4 in		
# of Anchors, n =	1	- anchors per connection	
S_X =	0 in		
A_{se} =	0.051 in^2		

Tension Allowables

Steel Strength, ϕN_{sa} =	4219 lbs	<--ACI 318-14 Eq 17.4.1.2		
Concrete Breakout, $(0.75)\phi N_{cbq}$ =	1713 lbs	<--ACI 318-14 Eq 17.4.2.1a		
Pullout Strength, $(0.75)\phi N_{pn}$ =	NA	<--ACI 318-14 Eq 17.4.3.1		
	LC #1		LC #2	
Factored Tension Load (N_u) =	0 lbs		0 lbs	
max tension stress ratio (TSR) =	0.000	OK	0.000	OK

Shear Allowables

Steel Strength, ϕV_{sa} =	2031 lbs	<--ACI 318-14 Eq 17.5.1.2c		
Concrete breakout, ϕV_{cbq} =	1238 lbs	<--ACI 318-14 Eq 17.5.2.1b		
Concrete pryout, ϕV_{cpq} =	2460 lbs	<--ACI 318-14 Eq 17.5.3.1b		
	LC #1		LC #2	
Factored Shear Load (V_u) =	102 lbs		53 lbs	
Max shear stress ratio (VSR) =	0.083	OK	0.043	OK
Combined shear and tension stress ratio (TSR + VSR) =	0.083	< 1.2 OK - LC#1 (controls)		

USE: NO UPLIFT - USE (1) 3/8" DIA Hilti Kwik Bolt-TZ2 (CS) Anchor - 2 1/2" embed. ICC REPORT #ESR-4266

JOHNSTON BURKHOLDER ASSOCIATES
consulting structural engineers
930 CENTRAL · KANSAS CITY, MO 64105
816.421.4200 · WWW.JBAENGR.COM

PROJECT NO:	SHEET NO:	OF:
2401802403	34	66
PROJECT NAME: #02403 - Puyallup, WA		
MADE BY: KSH	DATE: 04/19/24	
CHECKED BY:	DATE:	

Shelving / Single Sided 78" Tall "EC" 5 Level 4878 EC

IBC 2021 / ASCE 7-16 / 2016 RMI (ANSI/MH16.3-16)

Punching Shear Check:
(Design per ACI 318-14 section 14.5.5)

Max. Factored Vertical Load (P_u) =	547	lbs
Slab Concrete f'_c =	3500	psi
Slab thickness (t) =	4	in.
Rack Post X-X =	2	in.
Rack Post Y-Y =	2	in.
b_o =	24.00	in.
β =	1.00	
V_n =	22718	lbs Eq. (22-10)
V_n max =	15107	lbs Eq. (22-10)
ϕV_n =	9064.38	lbs
$V_u/\phi V_n$ =	0.060	< 1.0 O.K.

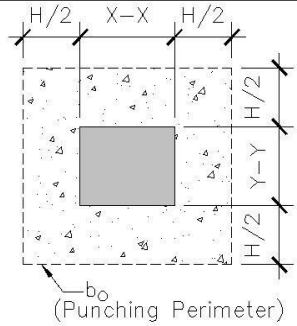

Slab tension based on Soil bearing area check:

Allowable soil bearing =	1500	psf
Max. Vertical Load (Service) (P) =	343	lbs
Area reqd. for bearing (A_{reqd}) =	0.23	ft^2
"b" distance =	5.74	in
Slab thickness (t) =	4.00	in
S = (1")$(t)^2$/6 =	2.67	in^3/in
ϕM_{nt} (tension allowable) = $\phi_t(7.5)[(f'_c)^{1/2}](S)$ =	710	in-lb/in
Factored uniform bearing, $w_u = P_u / A_{reqd}$ =	17	lb/in/in
$M_u = w_u L^2/3 = (w_u)[(b-(2"))/2)^2] / 3$ =	19.35	in-lb/in - Defl. End M1 = 10 in-lb/in
$M_u/\phi M_{nt}$ =	0.027	< 1.0 O.K.

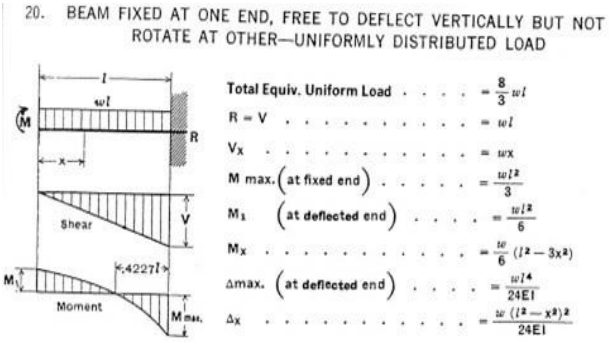

Shelving Fixture FOS Overturning with Resistance from Effective Weight of Slab on Grade:

Width of Single Rack =	39	in
Slab thickness (t) =	4.0	in
Modulus of Rupture, f_r = 7.5*SQRT(f'c) =	443.7	psi
Concrete Slab Section Modulus, S = $b(t)^2$/6 =	32.0	in^3/ft
Allowable Concrete Slab Bending Moment, $M_{all}/FS = S*f_r/1.5$ =	1183.2	ft*lbs/ft
Effective Cantilever Span Length (L_c) at M_{all} =	6.9	ft
Total Length of Slab (l_c + Width of Single Rack) =	10.1	ft
Trib. Width of Slab = Trib width of Rack =	4.0	ft
Weight of Concrete Slab at Rack (P_{conc}) =	2026	lbs
Resisting Moment - Concrete Slab at Rack, $M_{RST(slab)} = P_{conc} * L_c/2$ =	123130	in*lbs
Load Combination #1: M_{OT} =	4090	in*lbs
$M_{RST(Rack)} + M_{RST(slab)}$ =	131580	in*lbs
Total Overturning FOS =	32.168	OK
Load Combination #2: M_{OT} =	2571	in*lbs
$M_{RST(Rack)} + M_{RST(slab)}$ =	127030	in*lbs
Total Overturning FOS =	49.412	OK

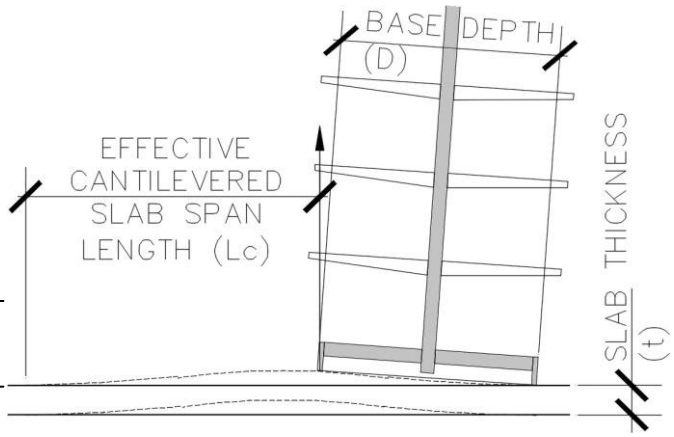

JOHNSTON BURKHOLDER ASSOCIATES
consulting structural engineers
930 CENTRAL · KANSAS CITY, MO 64105
816.421.4200 · WWW.JBAENGR.COM

PROJECT NO: 2401802403	SHEET NO: 35	OF: 66	
PROJECT NAME: #02403 - Puyallup, WA			
MADE BY: KSH	DATE: 04/19/24		
CHECKED BY:	DATE:		

Shelving / Single Sided | 84" Tall "3RX" 9 Level | 9-3RX

IBC 2021 / ASCE 7-16 / 2016 RMI (ANSI/MH16.3-16)

Seismic Importance Factor =	1.0	
Supported on Elevated Floor (Y/N):	No	
Total Load per shelf =	15 lbs	
# of Levels =	Wall 9 Level	
Uniform Weight per level =	5.00 psf/shelf	
Weight of Unit =	100 lbs	
Anchorage spacing/Trib width =	4 ft	*(Frames are assumed to be 4'-0" oc)*
Shelf depth =	9 in	Shelf Load / Level
h_9 =	9.5 in	15 lbs
h_8 =	10 in	15 lbs
h_7 =	9.5 in	15 lbs
h_6 =	10 in	15 lbs
h_5 =	9.5 in	15 lbs
h_4 =	10 in	15 lbs
h_3 =	9.5 in	15 lbs
h_2 =	10 in	15 lbs
h_1 =	6 in	15 lbs
Total Shelf Height, H_t =	84 in	
Unit Height, H_u =	84 in	
Unit Base Depth, D =	6.5 in	

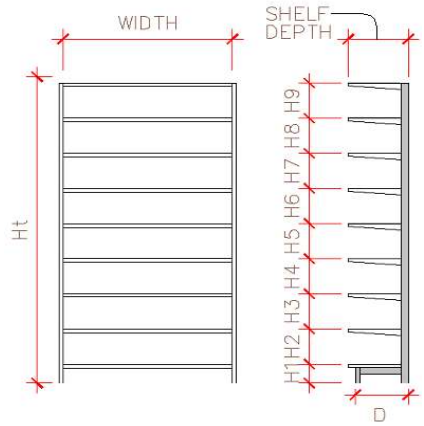

Overturning Stability (Load cases are per ASCE 7 sect. 15.5.3.6):

Load Case 1* [per RMI sect. 2.6.8(1) - PL=0.67(PL)]
[per RMI sect. 2.6.2, PL_{RF} = 1.0]

Seismic $(C_s)(I_p)$ = 0.210 W_s (Cross-Aisle)
$W_s = (0.67)(PL_{RF})((0.67)PL)+DL$ = 160.6 lbs
Base Shear, $V = C_sI_pW_s$ = 33.8 lbs
Horizontal forces per level, $F_x = C_{vx}V$ (RMI sect 2.6.6)

(Service Loads, E = 0.7)		
F_9 =	2.4 lbs	@ 90 in (CM)
F_8 =	2.2 lbs	@ 80.5 in (CM)
F_7 =	1.9 lbs	@ 70.5 in (CM)
F_6 =	1.6 lbs	@ 61 in (CM)
F_5 =	1.4 lbs	@ 51 in (CM)
F_4 =	1.1 lbs	@ 41.5 in (CM)
F_3 =	0.8 lbs	@ 31.5 in (CM)
F_2 =	0.6 lbs	@ 22 in (CM)
F_1 =	0.3 lbs	@ 12 in (CM)
F_u =	11.3 lbs	@ 42 in (CM)
Σf_i =	33.8 lbs	(@ Factored Loads)

Note: (CM) = Product Center of Mass typically 6 inches above the top of shelf at each level.

Calculate Overturning Moment (Service), $M_{OT} = \Sigma f_i h_i$
M_{OT} = 1259 in-lbs
Calculate Resisting Moment (Service), M_{RST}
M_{RST} = 618 in-lbs
Factor of Safety
FOS = 0.490
UPLIFT - ANCHORS REQUIRED

Load Case 2* [per RMI sect. 2.6.8(2) - PL=1.0(PL)]
[per RMI sect. 2.6.2, PL_{RF} = 1.0]

Seismic $(C_s)(I_p)$ = 0.210 W_s (Cross-Aisle)
$W_s = (0.67)(PL_{RF})((1)PL)+DL$ = 110.1 lbs
Base Shear, $V = C_sI_pW_s$ = 23.1 lbs
Horizontal forces per level, $F_x = C_{vx}V$ (RMI sect 2.6.6)

(Service Loads)		
F_9 =	3.9 lbs	@ 90in (CM)
F_8 =	0.0 lbs	
F_7 =	0.0 lbs	
F_6 =	0.0 lbs	
F_5 =	0.0 lbs	
F_4 =	0.0 lbs	
F_3 =	0.0 lbs	
F_2 =	0.0 lbs	
F_1 =	0.0 lbs	
F_u =	12.3 lbs	@ 42in (CM)
Σf_i =	23.1 lbs	(@ Factored Loads)

Calculate Overturning Moment (Service), $M_{OT} = \Sigma f_i h_i$
M_{OT} = 869 in-lbs
Calculate Resisting Moment (Service), M_{RST}
M_{RST} = 374 in-lbs
Factor of Safety
FOS = 0.430
UPLIFT - ANCHORS REQUIRED

Base Reactions:

Reactions (Service Loads):	LC #1		LC #2	
R_h =	12 lbs		8 lbs	
R_v =	99 lbs	(Uplift)	76 lbs	(Uplift)
Overturning FOS =	0.490	< 1.5--ABs Reqd	0.430	<1.5--ABs Reqd
Sliding Restraint force, R_{RST} / FOS =	69lbs / 5.796 >= 1.5 OK		47lbs / 5.828 >= 1.5 OK	
Reactions (Factored Loads):	**LC #1**		**LC #2**	
Base Shear (R_{uh}) =	34 lbs		23 lbs	
Net Uplift (R_{uv}) =	484 lbs		340 lbs	
Overturning + Gravity (P_u) =	550 lbs		361 lbs	

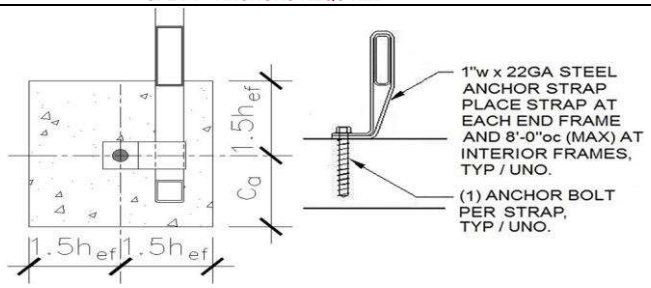

Anchor Design (using "Cracked Concrete" Properties)

Try: 3/8" DIA Hilti Kwik Bolt-TZ2 (CS) Anchor - 2 1/2" embed.

Embedment =	2.5 in	
f'_c =	3500 psi	
e_h' =	0 in	<--- Eccen. Of Anchor
h_{ef} =	2 in	$1.5(h_{ef})$ = 3.000 in
c_a =	3.5 in	$1.5(c_a)$ = 5.250 in
Conc. thickness, t =	4 in	
# of Anchors, n =	1	- anchors per connection
S_X =	0 in	
A_{se} =	0.051 in^2	

Tension Allowables

Steel Strength, ϕN_{sa} =	4219 lbs	<--ACI 318-14 Eq 17.4.1.2		
Concrete Breakout, $(0.75)\phi N_{cbq}$ =	1713 lbs	<--ACI 318-14 Eq 17.4.2.1a		
Pullout Strength, $(0.75)\phi N_{pn}$ =	NA	<--ACI 318-14 Eq 17.4.3.1		
	LC #1		LC #2	
Factored Tension Load (N_u) =	484 lbs		340 lbs	
max tension stress ratio (TSR) =	0.283	OK	0.199	OK

Shear Allowables

Steel Strength, ϕV_{sa} =	2031 lbs	<--ACI 318-14 Eq 17.5.1.2c		
Concrete breakout, ϕV_{cbq} =	1238 lbs	<--ACI 318-14 Eq 17.5.2.1b		
Concrete pryout, ϕV_{cpq} =	2460 lbs	<--ACI 318-14 Eq 17.5.3.1b		
	LC #1		LC #2	
Factored Shear Load (V_u) =	34 lbs		23 lbs	
Max shear stress ratio (VSR) =	0.027	OK	0.019	OK
Combined shear and tension stress ratio (TSR + VSR) =	0.310	< 1.2 OK - LC#1 (controls)		

USE: (1) 3/8" DIA Hilti Kwik Bolt-TZ2 (CS) Anchor - 2 1/2" embed. ICC REPORT #ESR-4266

JOHNSTON BURKHOLDER ASSOCIATES
consulting structural engineers
930 CENTRAL · KANSAS CITY, MO 64105
816.421.4200 · WWW.JBAENGR.COM

PROJECT NO:	SHEET NO:	OF:
2401802403	36	66
PROJECT NAME: #02403 - Puyallup, WA		
MADE BY: KSH	DATE: 04/19/24	
CHECKED BY:	DATE:	

Shelving / Single Sided 84" Tall "3RX" 9 Level 9-3RX

IBC 2021 / ASCE 7-16 / 2016 RMI (ANSI/MH16.3-16)

Punching Shear Check:
(Design per ACI 318-14 section 14.5.5)

Max. Factored Vertical Load (P_u) =	550	lbs
Slab Concrete f'_c =	3500	psi
Slab thickness (t) =	4	in.
Rack Post X-X =	2	in.
Rack Post Y-Y =	2	in.
b_o =	24.00	in.
β =	1.00	
V_n =	22718	lbs Eq. (22-10)
V_n max =	15107	lbs Eq. (22-10)
ϕV_n =	9064.38	lbs
$V_u/\phi V_n$ =	0.061	< 1.0 O.K.

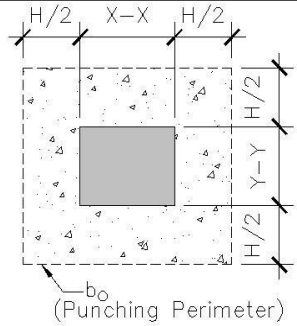

Slab tension based on Soil bearing area check:

Allowable soil bearing =	1500	psf
Max. Vertical Load (Service) (P) =	256	lbs
Area reqd. for bearing (A_{reqd}) =	0.17	ft^2
"b" distance =	4.96	in
Slab thickness (t) =	4.00	in
S = (1")$(t)^2$/6 =	2.67	in^3/in
ϕM_{nt} (tension allowable) = $\phi_t(7.5)[(f'_c)^{1/2}](S)$ =	710	in-lb/in
Factored uniform bearing, $w_u = P_u / A_{reqd}$ =	22	lb/in/in
$M_u = w_u L^2/3 = (w_u)[(b-(2"))/2)^2] / 3$ =	16.31	in-lb/in - Defl. End M1 = 9 in-lb/in
$M_u/\phi M_{nt}$ =	0.023	< 1.0 O.K.

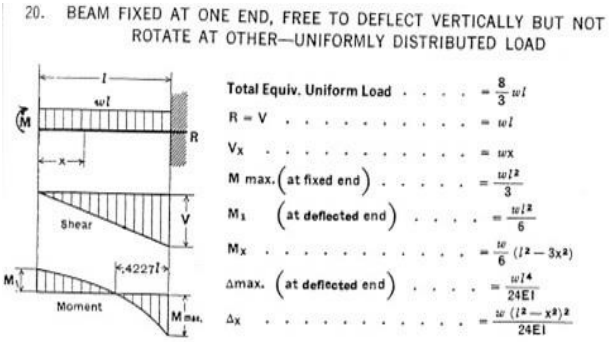

Shelving Fixture FOS Overturning with Resistance from Effective Weight of Slab on Grade:

Width of Single Rack =	6.5	in
Slab thickness (t) =	4.0	in
Modulus of Rupture, f_r = 7.5*SQRT(f'c) =	443.7	psi
Concrete Slab Section Modulus, S = $b(t)^2/6$ =	32.0	in^3/ft
Allowable Concrete Slab Bending Moment, $M_{all}/FS = S*f_r/1.5$ =	1183.2	ft*lbs/ft
Effective Cantilever Span Length (L_c) at M_{all} =	6.9	ft
Total Length of Slab (l_c + Width of Single Rack) =	7.4	ft
Trib. Width of Slab = Trib width of Rack =	4.0	ft
Weight of Concrete Slab at Rack (P_{conc}) =	1484	lbs
Resisting Moment - Concrete Slab at Rack, $M_{RST(slab)} = P_{conc} * L_c/2$ =	66090	in*lbs
Load Combination #1: M_{OT} =	1259	in*lbs
$M_{RST(Rack)} + M_{RST(slab)}$ =	66707	in*lbs
Total Overturning FOS =	52.978	OK
Load Combination #2: M_{OT} =	869	in*lbs
$M_{RST(Rack)} + M_{RST(slab)}$ =	66464	in*lbs
Total Overturning FOS =	76.451	OK

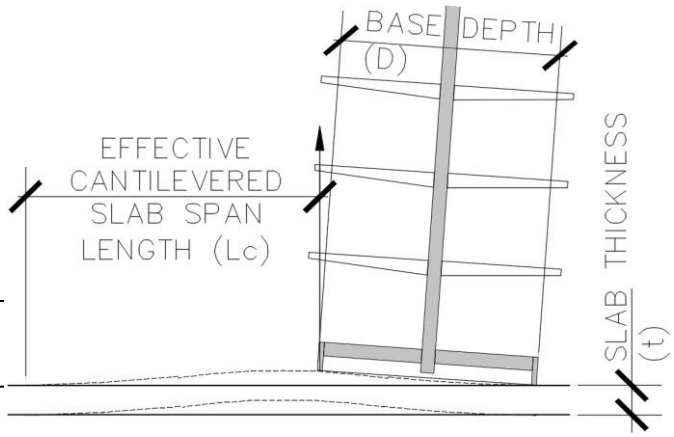

JOHNSTON BURKHOLDER ASSOCIATES
consulting structural engineers
930 CENTRAL · KANSAS CITY, MO 64105
816.421.4200 · WWW.JBAENGR.COM

PROJECT NO: 2401802403	SHEET NO: 37	OF: 66	
PROJECT NAME: #02403 - Puyallup, WA			
MADE BY: KSH	DATE: 04/19/24		
CHECKED BY:	DATE:		

Shelving / Double Sided | 84" Tall "3RX" 9 Level | 18-3RX

IBC 2021 / ASCE 7-16 / 2016 RMI (ANSI/MH16.3-16)

Seismic Importance Factor =	1.0	
Supported on Elevated Floor (Y/N):	No	
Total Load per shelf =	15 lbs	<---assumes (2) shelves per level
# of Levels =	9 Level	
Uniform Weight per level =	5.00 psf/shelf	
Weight of Unit =	100 lbs	
Upright Frame anchorage spacing (Trib width) =	4 ft	*(Frames are assumed to be 4'-0" oc)*
Shelf depth (ea. side) =	9 in	Shelf Load / Level / Frame
h_9 =	9.5 in	30 lbs
h_8 =	10 in	30 lbs
h_7 =	9.5 in	30 lbs
h_6 =	10 in	30 lbs
h_5 =	9.5 in	30 lbs
h_4 =	10 in	30 lbs
h_3 =	9.5 in	30 lbs
h_2 =	10 in	30 lbs
h_1 =	6 in	30 lbs
Total Shelf Height, H_t =	84 in	Unit Height, H_u = 84 in
Unit Base Depth, D =	8.5 in	

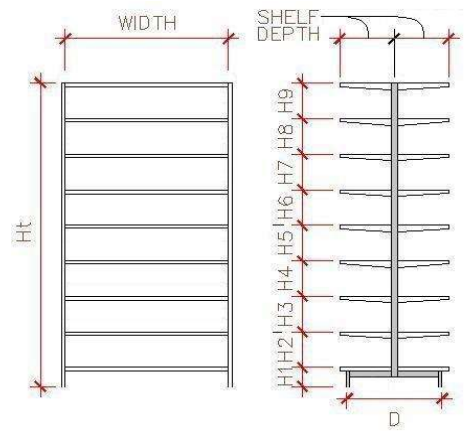

Overturning Stability (Load cases are per ASCE 7 sect. 15.5.3.6):

Load Case 1* [per RMI sect. 2.6.8(1) - PL=0.67(PL)]
[per RMI sect. 2.6.2, PL_{RF} = 1.0]

Seismic $(C_s)(I_p)$ =		0.210	W_s (Cross-Aisle)
$W_s = (0.67)(PL_{RF})((0.67)PL)+DL$ =		221.2 lbs	
Base Shear, $V = C_s I_p W_s$ =		46.5 lbs	
Horizontal forces per level, $F_x = C_{vx}V$ (RMI sect 2.6.6)			
(Service Loads, E = 0.7)	F_9 =	4.4 lbs	@ 90 in (CM)
	F_8 =	3.9 lbs	@ 80.5 in (CM)
	F_7 =	3.4 lbs	@ 70.5 in (CM)
	F_6 =	3.0 lbs	@ 61 in (CM)
	F_5 =	2.5 lbs	@ 51 in (CM)
	F_4 =	2.0 lbs	@ 41.5 in (CM)
	F_3 =	1.5 lbs	@ 31.5 in (CM)
	F_2 =	1.1 lbs	@ 22 in (CM)
	F_1 =	0.6 lbs	@ 12 in (CM)
	F_u =	10.2 lbs	@ 42 in (CM)
	Σf_i =	46.5 lbs	(@ Factored Loads)

Note: (CM) = Product Center of Mass typically 6 inches above the top of shelf at each level.

Calculate Overturning Moment (Service), $M_{OT} = \Sigma f_i h_i$
M_{OT} = 1849 in-lbs
Calculate Resisting Moment (Service), M_{RST}
M_{RST} = 1194 in-lbs
Factor of Safety
FOS = 0.646
UPLIFT - ANCHORS REQUIRED

Load Case 2* [per RMI sect. 2.6.8(2) - PL=1.0(PL)]
[per RMI sect. 2.6.2, PL_{RF} = 1.0]

Seismic $(C_s)(I_p)$ =		0.210	W_s (Cross-Aisle)
$W_s = (0.67)(PL_{RF})((1)PL)+DL$ =		120.1 lbs	
Base Shear, $V = C_s I_p W_s$ =		25.3 lbs	
Horizontal forces per level, $F_x = C_{vx}V$ (RMI sect 2.6.6)			
(Service Loads)	F_9 =	6.9 lbs	@ 90in (CM)
	F_8 =	0.0 lbs	
	F_7 =	0.0 lbs	
	F_6 =	0.0 lbs	
	F_5 =	0.0 lbs	
	F_4 =	0.0 lbs	
	F_3 =	0.0 lbs	
	F_2 =	0.0 lbs	
	F_1 =	0.0 lbs	
	F_u =	10.8 lbs	@ 42in (CM)
	Σf_i =	25.3 lbs	(@ Factored Loads)

Calculate Overturning Moment (Service), $M_{OT} = \Sigma f_i h_i$
M_{OT} = 1074 in-lbs
Calculate Resisting Moment (Service), M_{RST}
M_{RST} = 553 in-lbs
Factor of Safety
FOS = 0.514
UPLIFT - ANCHORS REQUIRED

Check Single Frame / Bay Overturning Stability:

M_{OT} (LC#1) =	1849 in-lbs		M_{OT} (LC#2) =	1074 in-lbs	
M_{RST} (LC#1) =	1194 in-lbs		M_{RST} (LC#2) =	553 in-lbs	
FOS=M_{RST} / M_{OT} =	0.646	< 1.0 AB Reqd	FOS = M_{RST} / M_{OT} =	0.514	< 1.5 AB Reqd

--> ABs Reqd at Each Frame - FOS<1.0 at LC#1 or LC#2

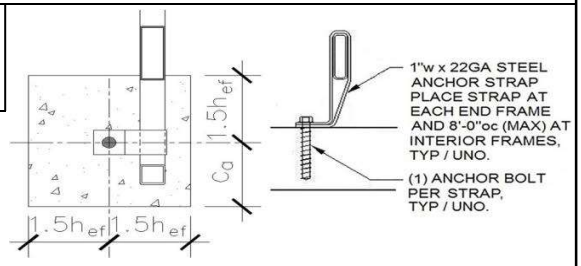

Base Reactions:

Reactions (Service Loads):	LC #1		LC #2	
R_h =	16 lbs		9 lbs	
R_v =	77 lbs	(Uplift)	61 lbs	(Uplift)
Overturning FOS =	0.646	< 1.5 - ABs Reqd	0.514	<1.5 AB Reqd
Sliding Restraint force, R_{RST} / FOS =	82lbs / 5.039 >= 1.5 OK		47lbs / 5.274 >= 1.5 OK	

Reactions (Factored Loads):	LC #1	LC #2
Base Shear (R_{uh}) =	47 lbs	25 lbs
Net Uplift (R_{uv}) =	519 lbs	314 lbs
Overturning + Gravity (P_u) =	670 lbs	353 lbs

Tension Allowables

Steel Strength, ϕN_{sa} =	4219 lbs	<--ACI 318-14 Eq 17.4.1.2
Concrete Breakout, $(0.75)\phi N_{cbg}$ =	1713 lbs	<--ACI 318-14 Eq 17.4.2.1a
Pullout Strength, $(0.75)\phi N_{pn}$ =	NA	<--ACI 318-14 Eq 17.4.3.1

	LC #1		LC #2	
Factored Tension Load (N_u) =	519 lbs		314 lbs	
max tension stress ratio (TSR) =	0.303	OK	0.183	OK

Shear Allowables

Steel Strength, ϕV_{sa} =	2031 lbs	<--ACI 318-14 Eq 17.5.1.2c
Concrete breakout, ϕV_{cbq} =	1238 lbs	<--ACI 318-14 Eq 17.5.2.1b
Concrete pryout, ϕV_{cpq} =	2460 lbs	<--ACI 318-14 Eq 17.5.3.1b

	LC #1		LC #2	
Factored Shear Load (V_u) =	47 lbs		25 lbs	
Max shear stress ratio (VSR) =	0.038	OK	0.020	OK
Combined shear and tension stress ratio (TSR + VSR) =	0.340	< 1.2 OK - LC#1 (controls)		

Anchor Design (using "Cracked Concrete" Properties)

Try: 3/8" DIA Hilti Kwik Bolt-TZ2 (CS) Anchor - 2 1/2" embed.

Embedment =	2.5 in	
f'_c =	3500 psi	
e_n' =	0 in	<--- Eccen. Of Anchor
h_{ef} =	2 in	$1.5(h_{ef})$ = 3.000 in
c_a =	3.5 in	$1.5(c_a)$ = 5.250 in
Conc. thickness, t =	4 in	
# of Anchors, n =	1	- anchors per connection
S_X =	0 in	
A_{se} =	0.051 in^2	

USE: (1) 3/8" DIA Hilti Kwik Bolt-TZ2 (CS) Anchor - 2 1/2" embed. ICC REPORT #ESR-4266

JOHNSTON BURKHOLDER ASSOCIATES
consulting structural engineers
930 CENTRAL · KANSAS CITY, MO 64105
816.421.4200 · WWW.JBAENGR.COM

PROJECT NO: 2401802403	SHEET NO: 38	OF: 66
PROJECT NAME: #02403 - Puyallup, WA		
MADE BY: KSH	DATE: 04/19/24	
CHECKED BY:	DATE:	

Shelving / Double Sided 84" Tall "3RX" 9 Level 18-3RX

IBC 2021 / ASCE 7-16 / 2016 RMI (ANSI/MH16.3-16)

Punching Shear Check:
(Design per ACI 318-14 section 14.5.5)

Max. Factored Vertical Load (P_u) =	670	lbs
Slab Concrete f 'c =	3500	psi
Slab thickness (t) =	4	in.
Rack Post X-X =	2	in.
Rack Post Y-Y =	2	in.
b_o =	24.00	in.
β =	1.00	
V_n =	22718	lbs Eq. (22-10)
V_n max =	15107	lbs Eq. (22-10)
ϕV_n =	9064	lbs
$V_u/\phi V_n$ =	0.074	< 1.0 O.K.

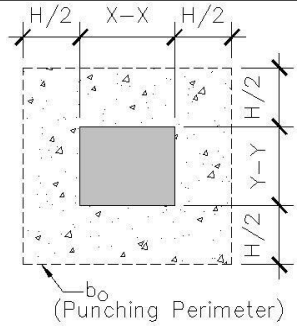

Slab tension based on Soil bearing area check:

Allowable soil bearing =	1500	psf
Max. Vertical Load (Service) (P) =	331	lbs
Area reqd. for bearing (A_{reqd}) =	0.22	ft^2
"b" distance =	5.64	in
Slab thickness (t) =	4.00	in
S = (1")$(t)^2$/6 =	2.67	in^3/in
ϕM_{nt} (tension allowable) = $\phi_t(7.5)[(f'_c)^{1/2}](S)$ =	710	in-lb/in
Factored uniform bearing, $w_u = P_u / A_{reqd}$ =	21.09	lb/in/in
$M_u = w_u L^2/3 = (w_u)[(b-(2''))/2)^2] / 3$ =	23.24	in-lb/in - Defl. End M1 = 12 in-lb/in
$M_u/\phi M_{nt}$ =	0.033	< 1.0 O.K.

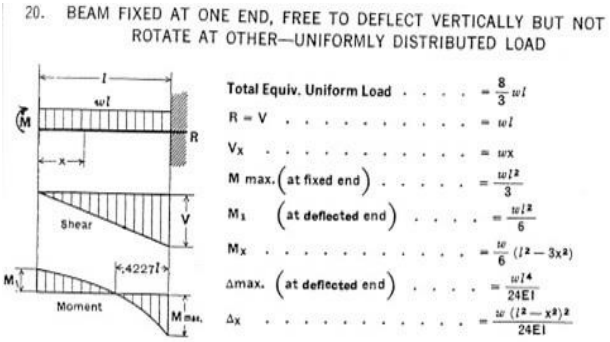

Shelving Fixture FOS Overturning with Resistance from Effective Weight of Slab on Grade:

Width of Single Rack =	8.5	in
Slab thickness (t) =	4.0	in
Modulus of Rupture, f_r = 7.5*SQRT(f'c) =	443.7	psi
Concrete Slab Section Modulus, S = $b(t)^2$/6 =	32.0	in^3/ft
Allowable Concrete Slab Bending Moment, $M_{all} = S*f_r$ =	1183.2	ft*lbs/ft
Effective Cantilever Span Length (L_c) at M_{all} =	6.9	ft
Total Length of Slab (l_c + Width of Single Rack) =	7.6	ft
Trib. Width of Slab = Trib width of Rack =	4.0	ft
Weight of Concrete Slab at Rack (P_{conc}) =	1518	lbs
Resisting Moment - Concrete Slab at Rack, $M_{RST(slab)} = P_{conc} * L_c/2$ =	69092	in*lbs
Load Combination #1: M_{OT} =	1849	in*lbs
$M_{RST(Rack)} + M_{RST(slab)}$ =	70286	in*lbs
Total Overturning FOS =	38.015	OK
Load Combination #2: M_{OT} =	1074	in*lbs
$M_{RST(Rack)} + M_{RST(slab)}$ =	69644	in*lbs
Total Overturning FOS =	64.823	OK

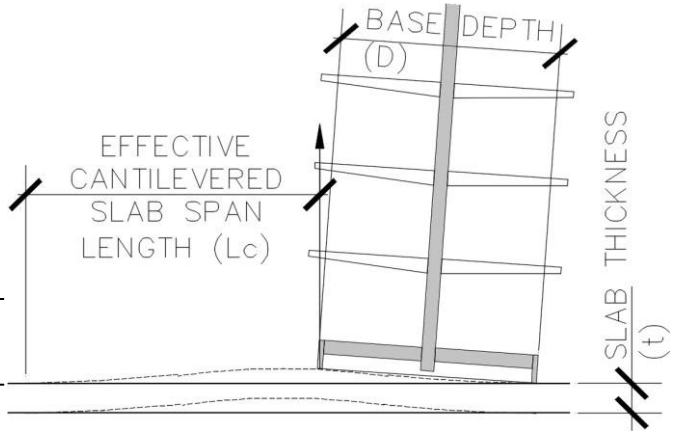

JOHNSTON BURKHOLDER ASSOCIATES
consulting structural engineers
930 CENTRAL · KANSAS CITY, MO 64105
816.421.4200 · WWW.JBAENGR.COM

PROJECT NO: 2401802403	SHEET NO: 39	OF: 66
PROJECT NAME: #02403 - Puyallup, WA		
MADE BY: KSH	DATE: 04/19/24	
CHECKED BY:	DATE:	

Shelving / Double Sided | 48" Tall "R" 4 Level | 36R

IBC 2021 / ASCE 7-16 / 2016 RMI (ANSI/MH16.3-16)

Seismic Importance Factor = 1.5
Supported on Elevated Floor (Y/N): No
Total Load per shelf = 125 lbs <---assumes (2) shelves per level
# of Levels = 4 Level
Uniform Weight per level = 20.83 psf/shelf
Weight of Unit = 100 lbs
Upright Frame anchorage spacing (Trib width) = 4 ft (*Frames are assumed to be 4'-0" oc*)
Shelf depth (ea. side) = 18 in

		Shelf Load / Level / Frame
h_9 =	0 in	
h_8 =	0 in	
h_7 =	0 in	
h_6 =	0 in	
h_5 =	0 in	
h_4 =	14 in	250 lbs
h_3 =	14 in	250 lbs
h_2 =	14 in	250 lbs
h_1 =	6 in	250 lbs

Total Shelf Height, H_t = 48 in Unit Height, H_u = 48 in
Unit Base Depth, D = 24 in

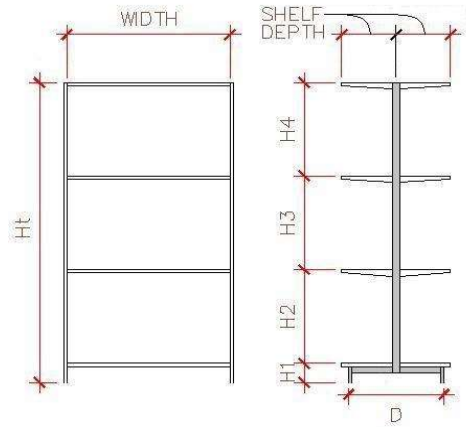

Overturning Stability (Load cases are per ASCE 7 sect. 15.5.3.6):

Load Case 1* [per RMI sect. 2.6.8(1) - PL=0.67(PL)]
[per RMI sect. 2.6.2, PL_{RF} = 1.0]
Seismic $(C_s)(I_p)$ = 0.315 W_s (Cross-Aisle)
$W_s = (0.67)(PL_{RF})((0.67)PL)+DL$ = 548.9 lbs
Base Shear, $V = C_sI_pW_s$ = 173.1 lbs
Horizontal forces per level, $F_x = C_{vx}V$ (RMI sect 2.6.6)
(Service Loads, E = 0.7)

F_9 =	0.0 lbs	@ 0 in (CM)
F_8 =	0.0 lbs	@ 0 in (CM)
F_7 =	0.0 lbs	@ 0 in (CM)
F_6 =	0.0 lbs	@ 0 in (CM)
F_5 =	0.0 lbs	@ 0 in (CM)
F_4 =	44.7 lbs	@ 54 in (CM)
F_3 =	33.1 lbs	@ 40 in (CM)
F_2 =	21.5 lbs	@ 26 in (CM)
F_1 =	9.9 lbs	@ 12 in (CM)
F_u =	11.9 lbs	@ 24 in (CM)
Σf_i =	173.1 lbs	(@ Factored Loads)

Note: (CM) = Product Center of Mass typically 6 inches above the top of shelf at each level.

Calculate Overturning Moment (Service), $M_{OT} = \Sigma f_i h_i$
M_{OT} = 4704 in-lbs
Calculate Resisting Moment (Service), M_{RST}
M_{RST} = 9240 in-lbs
Factor of Safety
FOS = 1.964
NO UPLIFT - NO ANCHORS REQUIRED

Load Case 2* [per RMI sect. 2.6.8(2) - PL=1.0(PL)]
[per RMI sect. 2.6.2, PL_{RF} = 1.0]
Seismic $(C_s)(I_p)$ = 0.315 W_s (Cross-Aisle)
$W_s = (0.67)(PL_{RF})((1)PL)+DL$ = 267.5 lbs
Base Shear, $V = C_sI_pW_s$ = 84.4 lbs
Horizontal forces per level, $F_x = C_{vx}V$ (RMI sect 2.6.6)
(Service Loads)

F_9 =	0.0 lbs	
F_8 =	0.0 lbs	
F_7 =	0.0 lbs	
F_6 =	0.0 lbs	
F_5 =	0.0 lbs	
F_4 =	50.1 lbs	@ 54in (CM)
F_3 =	0.0 lbs	
F_2 =	0.0 lbs	
F_1 =	0.0 lbs	
F_u =	8.9 lbs	@ 24in (CM)
Σf_i =	84.4 lbs	(@ Factored Loads)

Calculate Overturning Moment (Service), $M_{OT} = \Sigma f_i h_i$
M_{OT} = 2922 in-lbs
Calculate Resisting Moment (Service), M_{RST}
M_{RST} = 4200 in-lbs
Factor of Safety
FOS = 1.438
NO UPLIFT - ANCHORS REQUIRED

Check Single Frame / Bay Overturning Stability:

M_{OT} (LC#1) =	4704 in-lbs		M_{OT} (LC#2) =	2922 in-lbs	
M_{RST} (LC#1) =	9240 in-lbs		M_{RST} (LC#2) =	4200 in-lbs	
FOS=M_{RST} / M_{OT} =	1.964	≥ 1.5 No AB Reqd	FOS = M_{RST} / M_{OT} =	1.438	< 1.5 AB Reqd

--> ABs Reqd - FOS < 1.5 at LC#2

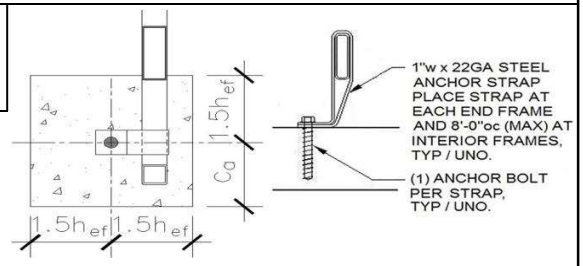

Base Reactions:

Reactions (Service Loads):	LC #1		LC #2	
R_h =	61 lbs		30 lbs	
R_v =	0 lbs	(No Uplift)	0 lbs	(No Uplift)
Overturning FOS =	1.964	>= 1.5	1.438	<1.5 AB Reqd
Sliding Restraint force, R_{RST} / FOS =	118lbs / 1.941 >= 1.5 OK		64lbs / 2.163 >= 1.5 OK	

Reactions (Factored Loads):	LC #1	LC #2
Base Shear (R_{uh}) =	173 lbs	84 lbs
Net Uplift (R_{uv}) =	0 lbs	0 lbs
Overturning + Gravity (P_u) =	995 lbs	455 lbs

Tension Allowables

Steel Strength, ϕN_{sa} =	4219 lbs	<--ACI 318-14 Eq 17.4.1.2
Concrete Breakout, $(0.75)\phi N_{cbg}$ =	1713 lbs	<--ACI 318-14 Eq 17.4.2.1a
Pullout Strength, $(0.75)\phi N_{pn}$ =	NA	<--ACI 318-14 Eq 17.4.3.1

	LC #1		LC #2	
Factored Tension Load (N_u) =	0 lbs		0 lbs	
max tension stress ratio (TSR) =	0.000	OK	0.000	OK

Shear Allowables

Steel Strength, ϕV_{sa} =	2031 lbs	<--ACI 318-14 Eq 17.5.1.2c
Concrete breakout, ϕV_{cbq} =	1238 lbs	<--ACI 318-14 Eq 17.5.2.1b
Concrete pryout, ϕV_{cpq} =	2460 lbs	<--ACI 318-14 Eq 17.5.3.1b

	LC #1		LC #2	
Factored Shear Load (V_u) =	173 lbs		84 lbs	
Max shear stress ratio (VSR) =	0.140	OK	0.068	OK
Combined shear and tension stress ratio (TSR + VSR) =	0.140	< 1.2 OK - LC#1 (controls)		

Anchor Design (using "Cracked Concrete" Properties)

Try: 3/8" DIA Hilti Kwik Bolt-TZ2 (CS) Anchor - 2 1/2" embed.

Embedment =	2.5 in	
f '$_c$ =	3500 psi	
e_n' =	0 in	<--- Eccen. Of Anchor
h_{ef} =	2 in	$1.5(h_{ef})$ = 3.000 in
c_a =	3.5 in	$1.5(c_a)$ = 5.250 in
Conc. thickness, t =	4 in	
# of Anchors, n =	1	- anchors per connection
S_X =	0 in	
A_{se} =	0.051 in^2	

USE: (1) 3/8" DIA Hilti Kwik Bolt-TZ2 (CS) Anchor - 2 1/2" embed. ICC REPORT #ESR-4266

JOHNSTON BURKHOLDER ASSOCIATES
consulting structural engineers
930 CENTRAL · KANSAS CITY, MO 64105
816.421.4200 · WWW.JBAENGR.COM

PROJECT NO: 2401802403	SHEET NO: 40	OF: 66
PROJECT NAME: #02403 - Puyallup, WA		
MADE BY: KSH	DATE: 04/19/24	
CHECKED BY:	DATE:	

Shelving / Double Sided 48" Tall "R" 4 Level 36R

IBC 2021 / ASCE 7-16 / 2016 RMI (ANSI/MH16.3-16)

Punching Shear Check:
(Design per ACI 318-14 section 14.5.5)

Max. Factored Vertical Load (P_u) =	995	lbs
Slab Concrete f 'c =	3500	psi
Slab thickness (t) =	4	in.
Rack Post X-X =	2	in.
Rack Post Y-Y =	2	in.
b_o =	24.00	in.
β =	1.00	
V_n =	22718	lbs Eq. (22-10)
V_n max =	15107	lbs Eq. (22-10)
ϕV_n =	9064	lbs
$V_u/\phi V_n$ =	0.110	< 1.0 O.K.

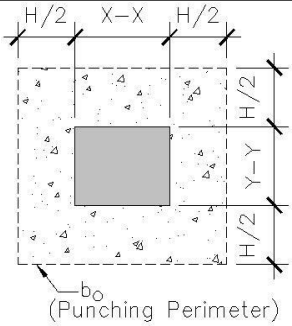

Slab tension based on Soil bearing area check:

Allowable soil bearing =	1500	psf
Max. Vertical Load (Service) (P) =	621	lbs
Area reqd. for bearing (A_{reqd}) =	0.41	ft^2
"b" distance =	7.72	in
Slab thickness (t) =	4.00	in
S = (1")$(t)^2$/6 =	2.67	in^3/in
ϕM_{nt} (tension allowable) = $\phi_t(7.5)[(f'_c)^{1/2}](S)$ =	710	in-lb/in
Factored uniform bearing, $w_u = P_u / A_{reqd}$ =	16.69	lb/in/in
$M_u = w_u L^2/3 = (w_u)[(b-(2''))/2)^2] / 3$ =	45.52	in-lb/in - Defl. End M1 = 23 in-lb/in
$M_u/\phi M_{nt}$ =	0.064	< 1.0 O.K.

20. BEAM FIXED AT ONE END, FREE TO DEFLECT VERTICALLY BUT NOT ROTATE AT OTHER—UNIFORMLY DISTRIBUTED LOAD

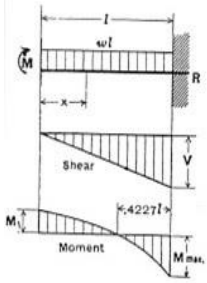

Total Equiv. Uniform Load . . . . $= \frac{8}{3}wl$
R = V . . . . . $= wl$
V_x . . . . . $= wx$
M max. (at fixed end) . . . . . $= \frac{wl^2}{3}$
M_1 (at deflected end) . . . . . $= \frac{wl^2}{6}$
M_x . . . . . $= \frac{w}{6}(l^2 - 3x^2)$
Δmax. (at deflected end) . . . . $= \frac{wl^4}{24EI}$
Δ_x . . . . . $= \frac{w(l^2 - x^2)^2}{24EI}$

Shelving Fixture FOS Overturning with Resistance from Effective Weight of Slab on Grade:

Width of Single Rack =	24	in
Slab thickness (t) =	4.0	in
Modulus of Rupture, f_r = 7.5*SQRT(f'c) =	443.7	psi
Concrete Slab Section Modulus, S = $b(t)^2/6$ =	32.0	in^3/ft
Allowable Concrete Slab Bending Moment, $M_{all} = S*f_r$ =	1183.2	ft*lbs/ft
Effective Cantilever Span Length (L_c) at M_{all} =	6.9	ft
Total Length of Slab (l_c + Width of Single Rack) =	8.9	ft
Trib. Width of Slab = Trib width of Rack =	4.0	ft
Weight of Concrete Slab at Rack (P_{conc}) =	1776	lbs
Resisting Moment - Concrete Slab at Rack, $M_{RST(slab)} = P_{conc} * L_c/2$ =	94616	in*lbs
Load Combination #1: M_{OT} =	4704	in*lbs
$M_{RST(Rack)} + M_{RST(slab)}$ =	103856	in*lbs
Total Overturning FOS =	22.080	OK
Load Combination #2: M_{OT} =	2922	in*lbs
$M_{RST(Rack)} + M_{RST(slab)}$ =	98816	in*lbs
Total Overturning FOS =	33.824	OK

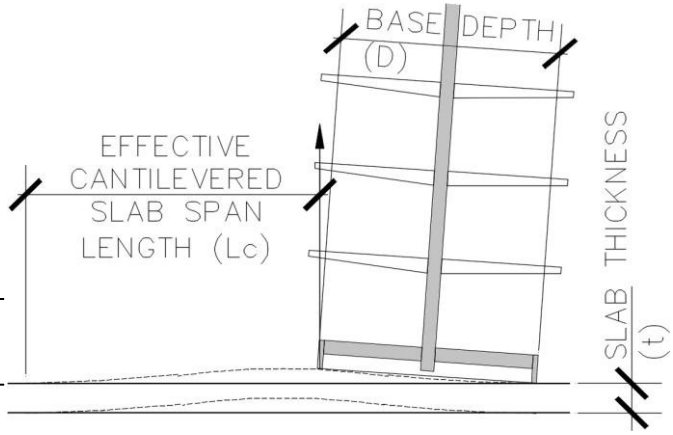

JOHNSTON BURKHOLDER ASSOCIATES
consulting structural engineers
930 CENTRAL · KANSAS CITY, MO 64105
816.421.4200 · WWW.JBAENGR.COM

PROJECT NO: 2401802403	SHEET NO: 41	OF: 66
PROJECT NAME: #02403 - Puyallup, WA		
MADE BY: KSH	DATE: 04/19/24	
CHECKED BY:	DATE:	

Shelving / Double Sided | 60" Tall "T" 5 Level | 36T

IBC 2021 / ASCE 7-16 / 2016 RMI (ANSI/MH16.3-16)

Seismic Importance Factor = 1.5
Supported on Elevated Floor (Y/N): No
Total Load per shelf = 125 lbs <---assumes (2) shelves per level
# of Levels = 5 Level
Uniform Weight per level = 20.83 psf/shelf
Weight of Unit = 100 lbs
Upright Frame anchorage spacing (Trib width) = 4 ft (*Frames are assumed to be 4'-0" oc*)
Shelf depth (ea. side) = 18 in

		Shelf Load / Level / Frame
h_9 =	0 in	
h_8 =	0 in	
h_7 =	0 in	
h_6 =	0 in	
h_5 =	13.5 in	250 lbs
h_4 =	13.5 in	250 lbs
h_3 =	13.5 in	250 lbs
h_2 =	13.5 in	250 lbs
h_1 =	6 in	250 lbs

Total Shelf Height, H_t = 60 in Unit Height, H_u = 60 in
Unit Base Depth, D = 24 in

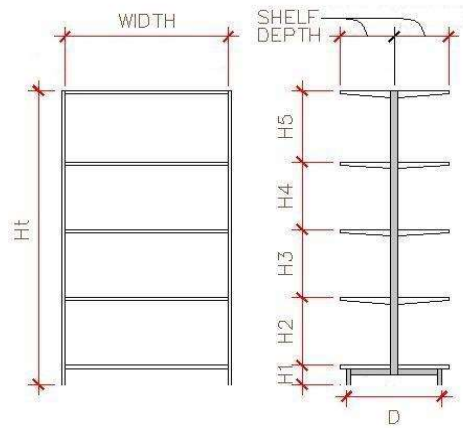

Overturning Stability (Load cases are per ASCE 7 sect. 15.5.3.6):

Load Case 1* [per RMI sect. 2.6.8(1) - PL=0.67(PL)]
[per RMI sect. 2.6.2, PL_{RF} = 1.0]
Seismic $(C_s)(I_p)$ = 0.315 W_s (Cross-Aisle)
$W_s = (0.67)(PL_{RF})((0.67)PL)+DL$ = 661.1 lbs
Base Shear, $V = C_s I_p W_s$ = 208.5 lbs
Horizontal forces per level, $F_x = C_{vx}V$ (RMI sect 2.6.6)
(Service Loads, E = 0.7)

F_9 =	0.0 lbs	@ 0 in (CM)
F_8 =	0.0 lbs	@ 0 in (CM)
F_7 =	0.0 lbs	@ 0 in (CM)
F_6 =	0.0 lbs	@ 0 in (CM)
F_5 =	45.2 lbs	@ 66 in (CM)
F_4 =	36.0 lbs	@ 52.5 in (CM)
F_3 =	26.7 lbs	@ 39 in (CM)
F_2 =	17.5 lbs	@ 25.5 in (CM)
F_1 =	8.2 lbs	@ 12 in (CM)
F_u =	12.3 lbs	@ 30 in (CM)
Σf_i =	208.5 lbs	(@ Factored Loads)

Note: (CM) = Product Center of Mass typically 6 inches above the top of shelf at each level.

Calculate Overturning Moment (Service), $M_{OT} = \Sigma f_i h_i$
M_{OT} = 6831 in-lbs
Calculate Resisting Moment (Service), M_{RST}
M_{RST} = 11250 in-lbs
Factor of Safety
FOS = 1.647
NO UPLIFT - NO ANCHORS REQUIRED

Load Case 2* [per RMI sect. 2.6.8(2) - PL=1.0(PL)]
[per RMI sect. 2.6.2, PL_{RF} = 1.0]
Seismic $(C_s)(I_p)$ = 0.315 W_s (Cross-Aisle)
$W_s = (0.67)(PL_{RF})((1)PL)+DL$ = 267.5 lbs
Base Shear, $V = C_s I_p W_s$ = 84.4 lbs
Horizontal forces per level, $F_x = C_{vx}V$ (RMI sect 2.6.6)
(Service Loads)

F_9 =	0.0 lbs	
F_8 =	0.0 lbs	
F_7 =	0.0 lbs	
F_6 =	0.0 lbs	
F_5 =	50.0 lbs	@ 66in (CM)
F_4 =	0.0 lbs	
F_3 =	0.0 lbs	
F_2 =	0.0 lbs	
F_1 =	0.0 lbs	
F_u =	9.1 lbs	@ 30in (CM)
Σf_i =	84.4 lbs	(@ Factored Loads)

Calculate Overturning Moment (Service), $M_{OT} = \Sigma f_i h_i$
M_{OT} = 3570 in-lbs
Calculate Resisting Moment (Service), M_{RST}
M_{RST} = 4200 in-lbs
Factor of Safety
FOS = 1.176
NO UPLIFT - ANCHORS REQUIRED

Check Single Frame / Bay Overturning Stability:

M_{OT} (LC#1) =	6831 in-lbs		M_{OT} (LC#2) =	3570 in-lbs	
M_{RST} (LC#1) =	11250 in-lbs		M_{RST} (LC#2) =	4200 in-lbs	
FOS=M_{RST} / M_{OT} =	1.647	≥ 1.5 No AB Reqd	FOS = M_{RST} / M_{OT} =	1.176	< 1.5 AB Reqd

--> ABs Reqd - FOS < 1.5 at LC#2

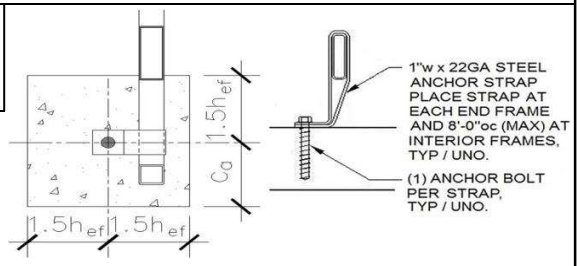

Base Reactions:

Reactions (Service Loads):	LC #1		LC #2	
R_h =	73 lbs		30 lbs	
R_v =	0 lbs	(No Uplift)	0 lbs	(No Uplift)
Overturning FOS =	1.647	>= 1.5	1.176	<1.5 AB Reqd
Sliding Restraint force, R_{RST} / FOS =	154lbs / 2.107 >= 1.5 OK		71lbs / 2.392 >= 1.5 OK	

Reactions (Factored Loads):	LC #1	LC #2
Base Shear (R_{uh}) =	209 lbs	84 lbs
Net Uplift (R_{uv}) =	0 lbs	0 lbs
Overturning + Gravity (P_u) =	1312 lbs	513 lbs

Tension Allowables

Steel Strength, ϕN_{sa} =	4219 lbs	<--ACI 318-14 Eq 17.4.1.2
Concrete Breakout, $(0.75)\phi N_{cbg}$ =	1713 lbs	<--ACI 318-14 Eq 17.4.2.1a
Pullout Strength, $(0.75)\phi N_{pn}$ =	NA	<--ACI 318-14 Eq 17.4.3.1

	LC #1		LC #2	
Factored Tension Load (N_u) =	0 lbs		0 lbs	
max tension stress ratio (TSR) =	0.000	OK	0.000	OK

Anchor Design (using "Cracked Concrete" Properties)

Try: 3/8" DIA Hilti Kwik Bolt-TZ2 (CS) Anchor - 2 1/2" embed.

Embedment =	2.5 in	
f'_c =	3500 psi	
e_n' =	0 in	<--- Eccen. Of Anchor
h_{ef} =	2 in	$1.5(h_{ef})$ = 3.000 in
c_a =	3.5 in	$1.5(c_a)$ = 5.250 in
Conc. thickness, t =	4 in	
# of Anchors, n =	1	- anchors per connection
S_X =	0 in	
A_{se} =	0.051 in^2	

Shear Allowables

Steel Strength, ϕV_{sa} =	2031 lbs	<--ACI 318-14 Eq 17.5.1.2c
Concrete breakout, ϕV_{cbq} =	1238 lbs	<--ACI 318-14 Eq 17.5.2.1b
Concrete pryout, ϕV_{cpq} =	2460 lbs	<--ACI 318-14 Eq 17.5.3.1b

	LC #1		LC #2	
Factored Shear Load (V_u) =	209 lbs		84 lbs	
Max shear stress ratio (VSR) =	0.168	OK	0.068	OK
Combined shear and tension stress ratio (TSR + VSR) =	0.168	< 1.2 OK - LC#1 (controls)		

USE: (1) 3/8" DIA Hilti Kwik Bolt-TZ2 (CS) Anchor - 2 1/2" embed. ICC REPORT #ESR-4266

JOHNSTON BURKHOLDER ASSOCIATES
consulting structural engineers
930 CENTRAL · KANSAS CITY, MO 64105
816.421.4200 · WWW.JBAENGR.COM

PROJECT NO: 2401802403	SHEET NO: 42	OF: 66
PROJECT NAME: #02403 - Puyallup, WA		
MADE BY: KSH	DATE: 04/19/24	
CHECKED BY:	DATE:	

Shelving / Double Sided 60" Tall "T" 5 Level 36T

IBC 2021 / ASCE 7-16 / 2016 RMI (ANSI/MH16.3-16)

Punching Shear Check:
(Design per ACI 318-14 section 14.5.5)

Max. Factored Vertical Load (P_u) =	1312	lbs	
Slab Concrete f 'c =	3500	psi	
Slab thickness (t) =	4	in.	
Rack Post X-X =	2	in.	
Rack Post Y-Y =	2	in.	
b_o =	24.00	in.	
β =	1.00		
V_n =	22718	lbs	Eq. (22-10)
V_n max =	15107	lbs	Eq. (22-10)
ϕV_n =	9064	lbs	
$V_u/\phi V_n$ =	0.145	< 1.0 O.K.	

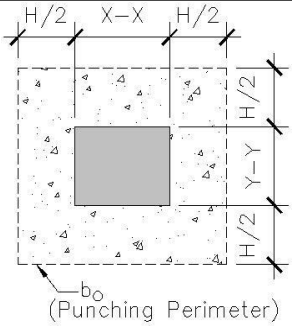

Slab tension based on Soil bearing area check:

Allowable soil bearing =	1500	psf	
Max. Vertical Load (Service) (P) =	792	lbs	
Area reqd. for bearing (A_{reqd}) =	0.53	ft^2	
"b" distance =	8.72	in	
Slab thickness (t) =	4.00	in	
S = (1")$(t)^2$/6 =	2.67	in^3/in	
ϕM_{nt} (tension allowable) = $\phi_t(7.5)[(f'_c)^{1/2}](S)$ =	710	in-lb/in	
Factored uniform bearing, $w_u = P_u / A_{reqd}$ =	17.26	lb/in/in	
$M_u = w_u L^2/3 = (w_u)[(b-(2''))/2)^2] / 3$ =	64.93	in-lb/in - Defl. End M1 = 33 in-lb/in	
$M_u/\phi M_{nt}$ =	0.091	< 1.0 O.K.	

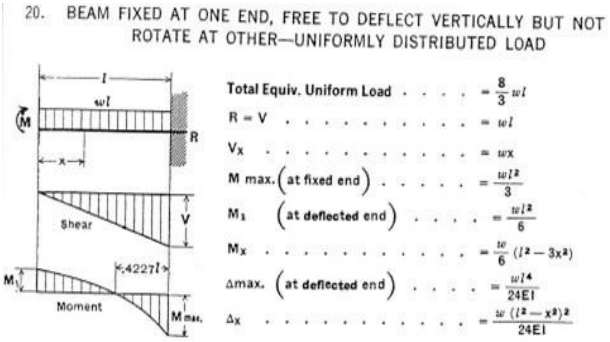

Shelving Fixture FOS Overturning with Resistance from Effective Weight of Slab on Grade:

Width of Single Rack =		24	in
Slab thickness (t) =		4.0	in
Modulus of Rupture, f_r = 7.5*SQRT(f'c) =		443.7	psi
Concrete Slab Section Modulus, S = $b(t)^2$/6 =		32.0	in^3/ft
Allowable Concrete Slab Bending Moment, $M_{all} = S*f_r$ =		1183.2	ft*lbs/ft
Effective Cantilever Span Length (L_c) at M_{all} =		6.9	ft
Total Length of Slab (l_c + Width of Single Rack) =		8.9	ft
Trib. Width of Slab = Trib width of Rack =		4.0	ft
Weight of Concrete Slab at Rack (P_{conc}) =		1776	lbs
Resisting Moment - Concrete Slab at Rack, $M_{RST(slab)} = P_{conc} * L_c/2$ =		94616	in*lbs
Load Combination #1:	M_{OT} =	6831	in*lbs
	$M_{RST(Rack)} + M_{RST(slab)}$ =	105866	in*lbs
	Total Overturning FOS =	15.498	OK
Load Combination #2:	M_{OT} =	3570	in*lbs
	$M_{RST(Rack)} + M_{RST(slab)}$ =	98816	in*lbs
	Total Overturning FOS =	27.676	OK

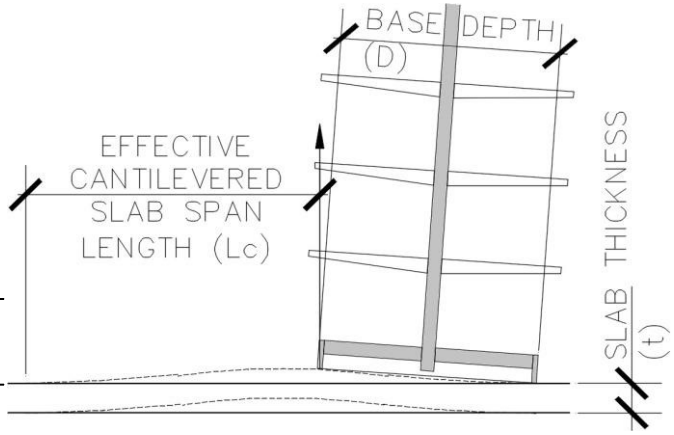

JOHNSTON BURKHOLDER ASSOCIATES
consulting structural engineers
930 CENTRAL · KANSAS CITY, MO 64105
816.421.4200 · WWW.JBAENGR.COM

PROJECT NO: 2401802403	SHEET NO: 43	OF: 66	
PROJECT NAME: #02403 - Puyallup, WA			
MADE BY: KSH	DATE: 04/19/24		
CHECKED BY:	DATE:		

Shelving / Double Sided | 90" Tall "X" 5 Level | 36X

IBC 2021 / ASCE 7-16 / 2016 RMI (ANSI/MH16.3-16)

Seismic Importance Factor = 1.5
Supported on Elevated Floor (Y/N): No
Total Load per shelf = 125 lbs <---assumes (2) shelves per level
# of Levels = 5 Level
Uniform Weight per level = 20.83 psf/shelf
Weight of Unit = 100 lbs
Upright Frame anchorage spacing (Trib width) = 4 ft (*Frames are assumed to be 4'-0" oc*)
Shelf depth (ea. side) = 18 in

		Shelf Load / Level / Frame
h_9 =	0 in	
h_8 =	0 in	
h_7 =	0 in	
h_6 =	0 in	
h_5 =	21 in	250 lbs
h_4 =	21 in	250 lbs
h_3 =	21 in	250 lbs
h_2 =	21 in	250 lbs
h_1 =	6 in	250 lbs

Total Shelf Height, H_t = 90 in Unit Height, H_u = 90 in
Unit Base Depth, D = 24 in

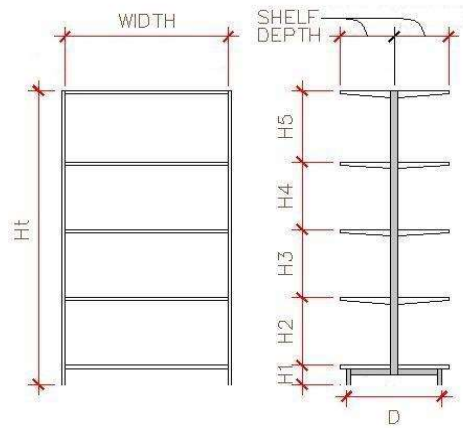

Overturning Stability (Load cases are per ASCE 7 sect. 15.5.3.6):

Load Case 1* [per RMI sect. 2.6.8(1) - PL=0.67(PL)]
[per RMI sect. 2.6.2, PL_{RF} = 1.0]
Seismic $(C_s)(I_p)$ = 0.315 W_s (Cross-Aisle)
$W_s = (0.67)(PL_{RF})((0.67)PL)+DL$ = 661.1 lbs
Base Shear, $V = C_s I_p W_s$ = 208.5 lbs
Horizontal forces per level, $F_x = C_{vx}V$ (RMI sect 2.6.6)
(Service Loads, E = 0.7)

F_9 =	0.0 lbs	@ 0 in (CM)
F_8 =	0.0 lbs	@ 0 in (CM)
F_7 =	0.0 lbs	@ 0 in (CM)
F_6 =	0.0 lbs	@ 0 in (CM)
F_5 =	47.2 lbs	@ 96 in (CM)
F_4 =	36.9 lbs	@ 75 in (CM)
F_3 =	26.5 lbs	@ 54 in (CM)
F_2 =	16.2 lbs	@ 33 in (CM)
F_1 =	5.9 lbs	@ 12 in (CM)
F_u =	13.2 lbs	@ 45 in (CM)
Σf_i =	208.5 lbs	(@ Factored Loads)

Note: (CM) = Product Center of Mass typically 6 inches above the top of shelf at each level.

Calculate Overturning Moment (Service), $M_{OT} = \Sigma f_i h_i$
M_{OT} = 9931 in-lbs
Calculate Resisting Moment (Service), M_{RST}
M_{RST} = 11250 in-lbs
Factor of Safety
FOS = 1.133
NO UPLIFT - ANCHORS REQUIRED

Load Case 2* [per RMI sect. 2.6.8(2) - PL=1.0(PL)]
[per RMI sect. 2.6.2, PL_{RF} = 1.0]
Seismic $(C_s)(I_p)$ = 0.315 W_s (Cross-Aisle)
$W_s = (0.67)(PL_{RF})((1)PL)+DL$ = 267.5 lbs
Base Shear, $V = C_s I_p W_s$ = 84.4 lbs
Horizontal forces per level, $F_x = C_{vx}V$ (RMI sect 2.6.6)
(Service Loads)

F_9 =	0.0 lbs	
F_8 =	0.0 lbs	
F_7 =	0.0 lbs	
F_6 =	0.0 lbs	
F_5 =	49.7 lbs	@ 96in (CM)
F_4 =	0.0 lbs	
F_3 =	0.0 lbs	
F_2 =	0.0 lbs	
F_1 =	0.0 lbs	
F_u =	9.3 lbs	@ 45in (CM)
Σf_i =	84.4 lbs	(@ Factored Loads)

Calculate Overturning Moment (Service), $M_{OT} = \Sigma f_i h_i$
M_{OT} = 5194 in-lbs
Calculate Resisting Moment (Service), M_{RST}
M_{RST} = 4200 in-lbs
Factor of Safety
FOS = 0.809
UPLIFT - ANCHORS REQUIRED

Check Single Frame / Bay Overturning Stability:
M_{OT} (LC#1) = 9931 in-lbs M_{OT} (LC#2) = 5194 in-lbs
M_{RST} (LC#1) = 11250 in-lbs M_{RST} (LC#2) = 4200 in-lbs
FOS=M_{RST} / M_{OT} = 1.133 < 1.0 AB Reqd FOS = M_{RST} / M_{OT} = 0.809 < 1.5 AB Reqd
--> ABs Reqd at Each Frame - FOS<1.0 at LC#1 or LC#2

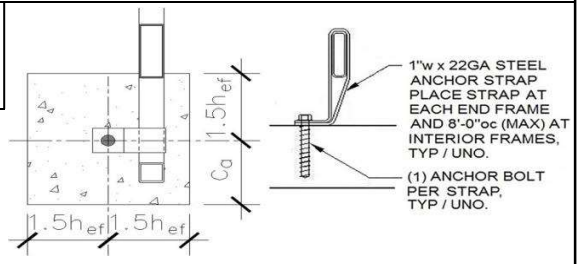

Base Reactions:

Reactions (Service Loads):	LC #1		LC #2	
R_h =	73 lbs		30 lbs	
R_v =	0 lbs	(No Uplift)	41 lbs	(Uplift)
Overturning FOS =	1.133	< 1.5 - ABs Reqd	0.809	<1.5 AB Reqd
Sliding Restraint force, R_{RST} / FOS =	186lbs / 2.55 >= 1.5 OK		88lbs / 2.965 >= 1.5 OK	

Reactions (Factored Loads):	LC #1	LC #2
Base Shear (R_{uh}) =	209 lbs	84 lbs
Net Uplift (R_{uv}) =	0 lbs	490 lbs
Overturning + Gravity (P_u) =	1587 lbs	657 lbs

Tension Allowables

Steel Strength, ϕN_{sa} =	4219 lbs	<--ACI 318-14 Eq 17.4.1.2
Concrete Breakout, $(0.75)\phi N_{cbg}$ =	1713 lbs	<--ACI 318-14 Eq 17.4.2.1a
Pullout Strength, $(0.75)\phi N_{pn}$ =	NA	<--ACI 318-14 Eq 17.4.3.1

	LC #1		LC #2	
Factored Tension Load (N_u) =	0 lbs		490 lbs	
max tension stress ratio (TSR) =	0.000	OK	0.286	OK

Shear Allowables

Steel Strength, ϕV_{sa} =	2031 lbs	<--ACI 318-14 Eq 17.5.1.2c
Concrete breakout, ϕV_{cbq} =	1238 lbs	<--ACI 318-14 Eq 17.5.2.1b
Concrete pryout, ϕV_{cpq} =	2460 lbs	<--ACI 318-14 Eq 17.5.3.1b

	LC #1		LC #2	
Factored Shear Load (V_u) =	209 lbs		84 lbs	
Max shear stress ratio (VSR) =	0.168	OK	0.068	OK
Combined shear and tension stress ratio (TSR + VSR) =	0.354	< 1.2 OK - LC#2 (controls)		

Anchor Design (using "Cracked Concrete" Properties)
Try: 3/8" DIA Hilti Kwik Bolt-TZ2 (CS) Anchor - 2 1/2" embed.
Embedment = 2.5 in
f'_c = 3500 psi
e_n' = 0 in <--- Eccen. Of Anchor
h_{ef} = 2 in $1.5(h_{ef})$ = 3.000 in
c_a = 3.5 in $1.5(c_a)$ = 5.250 in
Conc. thickness, t = 4 in
# of Anchors, n = 1 - anchors per connection
S_X = 0 in
A_{se} = 0.051 in^2

USE: (1) 3/8" DIA Hilti Kwik Bolt-TZ2 (CS) Anchor - 2 1/2" embed. ICC REPORT #ESR-4266

JOHNSTON BURKHOLDER ASSOCIATES
consulting structural engineers
930 CENTRAL · KANSAS CITY, MO 64105
816.421.4200 · WWW.JBAENGR.COM

PROJECT NO: 2401802403	SHEET NO: 44	OF: 66
PROJECT NAME: #02403 - Puyallup, WA		
MADE BY: KSH	DATE: 04/19/24	
CHECKED BY:	DATE:	

Shelving / Double Sided 90" Tall "X" 5 Level 36X

IBC 2021 / ASCE 7-16 / 2016 RMI (ANSI/MH16.3-16)

Punching Shear Check:
(Design per ACI 318-14 section 14.5.5)

Max. Factored Vertical Load (P_u) =	1587	lbs
Slab Concrete f 'c =	3500	psi
Slab thickness (t) =	4	in.
Rack Post X-X =	2	in.
Rack Post Y-Y =	2	in.
b_o =	24.00	in.
β =	1.00	
V_n =	22718	lbs Eq. (22-10)
V_n max =	15107	lbs Eq. (22-10)
ϕV_n =	9064	lbs
$V_u/\phi V_n$ =	0.175	< 1.0 O.K.

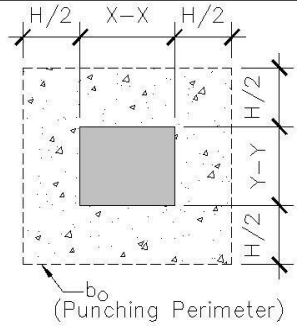

Slab tension based on Soil bearing area check:

Allowable soil bearing =	1500	psf
Max. Vertical Load (Service) (P) =	889	lbs
Area reqd. for bearing (A_{reqd}) =	0.59	ft^2
"b" distance =	9.24	in
Slab thickness (t) =	4.00	in
S = (1")$(t)^2$/6 =	2.67	in^3/in
ϕM_{nt} (tension allowable) = $\phi_t(7.5)[(f'_c)^{1/2}](S)$ =	710	in-lb/in
Factored uniform bearing, $w_u = P_u / A_{reqd}$ =	18.60	lb/in/in
$M_u = w_u L^2/3 = (w_u)[(b-(2''))/2)^2] / 3$ =	81.19	in-lb/in - Defl. End M1 = 41 in-lb/in
$M_u/\phi M_{nt}$ =	0.114	< 1.0 O.K.

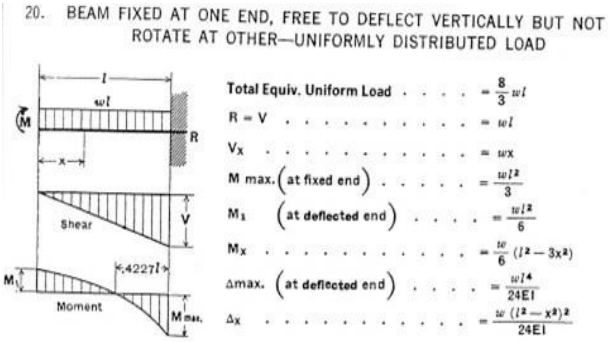

Shelving Fixture FOS Overturning with Resistance from Effective Weight of Slab on Grade:

Width of Single Rack =	24	in
Slab thickness (t) =	4.0	in
Modulus of Rupture, f_r = 7.5*SQRT(f'c) =	443.7	psi
Concrete Slab Section Modulus, S = $b(t)^2/6$ =	32.0	in^3/ft
Allowable Concrete Slab Bending Moment, $M_{all} = S*f_r$ =	1183.2	ft*lbs/ft
Effective Cantilever Span Length (L_c) at M_{all} =	6.9	ft
Total Length of Slab (l_c + Width of Single Rack) =	8.9	ft
Trib. Width of Slab = Trib width of Rack =	4.0	ft
Weight of Concrete Slab at Rack (P_{conc}) =	1776	lbs
Resisting Moment - Concrete Slab at Rack, $M_{RST(slab)} = P_{conc} * L_c/2$ =	94616	in*lbs
Load Combination #1: M_{OT} =	9931	in*lbs
$M_{RST(Rack)} + M_{RST(slab)}$ =	105866	in*lbs
Total Overturning FOS =	10.661	OK
Load Combination #2: M_{OT} =	5194	in*lbs
$M_{RST(Rack)} + M_{RST(slab)}$ =	98816	in*lbs
Total Overturning FOS =	19.026	OK

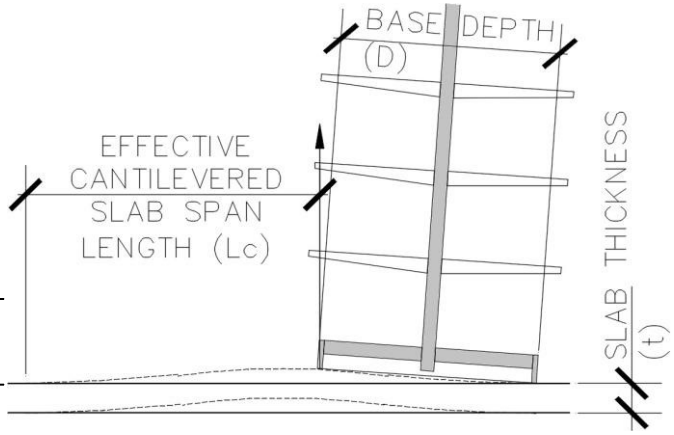

JOHNSTON BURKHOLDER ASSOCIATES
consulting structural engineers
930 CENTRAL · KANSAS CITY, MO 64105
816.421.4200 · WWW.JBAENGR.COM

PROJECT NO: 2401802403	SHEET NO: 45	OF: 66
PROJECT NAME: #02403 - Puyallup, WA		
MADE BY: KSH	DATE: 04/19/24	
CHECKED BY:	DATE:	

Shelving / Double Sided | 90" Tall "X" 5 Level | 48X

IBC 2021 / ASCE 7-16 / 2016 RMI (ANSI/MH16.3-16)

Seismic Importance Factor = 1.5
Supported on Elevated Floor (Y/N): No
Total Load per shelf = 150 lbs <---assumes (2) shelves per level
# of Levels = 5 Level
Uniform Weight per level = 18.75 psf/shelf
Weight of Unit = 100 lbs
Upright Frame anchorage spacing (Trib width) = 4 ft (*Frames are assumed to be 4'-0" oc*)
Shelf depth (ea. side) = 24 in

		Shelf Load / Level / Frame
h_9 =	0 in	
h_8 =	0 in	
h_7 =	0 in	
h_6 =	0 in	
h_5 =	21 in	300 lbs
h_4 =	21 in	300 lbs
h_3 =	21 in	300 lbs
h_2 =	21 in	300 lbs
h_1 =	6 in	300 lbs

Total Shelf Height, H_t = 90 in Unit Height, H_u = 90 in
Unit Base Depth, D = 33 in

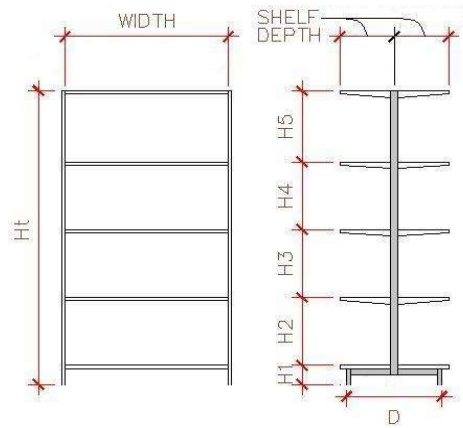

Overturning Stability (Load cases are per ASCE 7 sect. 15.5.3.6):

Load Case 1* [per RMI sect. 2.6.8(1) - PL=0.67(PL)]
[per RMI sect. 2.6.2, PL_{RF} = 1.0]
Seismic $(C_s)(I_p)$ = 0.315 W_s (Cross-Aisle)
$W_s = (0.67)(PL_{RF})((0.67)PL)+DL$ = 773.4 lbs
Base Shear, $V = C_s I_p W_s$ = 243.9 lbs
Horizontal forces per level, $F_x = C_{vx}V$ (RMI sect 2.6.6)
(Service Loads, E = 0.7)

F_9 =	0.0 lbs	@ 0 in (CM)
F_8 =	0.0 lbs	@ 0 in (CM)
F_7 =	0.0 lbs	@ 0 in (CM)
F_6 =	0.0 lbs	@ 0 in (CM)
F_5 =	56.1 lbs	@ 96 in (CM)
F_4 =	43.8 lbs	@ 75 in (CM)
F_3 =	31.5 lbs	@ 54 in (CM)
F_2 =	19.3 lbs	@ 33 in (CM)
F_1 =	7.0 lbs	@ 12 in (CM)
F_u =	13.1 lbs	@ 45 in (CM)
Σf_i =	243.9 lbs	(@ Factored Loads)

Note: (CM) = Product Center of Mass typically 6 inches above the top of shelf at each level.

Calculate Overturning Moment (Service), $M_{OT} = \Sigma f_i h_i$
M_{OT} = 11677 in-lbs
Calculate Resisting Moment (Service), M_{RST}
M_{RST} = 18233 in-lbs
Factor of Safety
FOS = 1.561
NO UPLIFT - NO ANCHORS REQUIRED

Load Case 2* [per RMI sect. 2.6.8(2) - PL=1.0(PL)]
[per RMI sect. 2.6.2, PL_{RF} = 1.0]
Seismic $(C_s)(I_p)$ = 0.315 W_s (Cross-Aisle)
$W_s = (0.67)(PL_{RF})((1)PL)+DL$ = 301.0 lbs
Base Shear, $V = C_s I_p W_s$ = 94.9 lbs
Horizontal forces per level, $F_x = C_{vx}V$ (RMI sect 2.6.6)
(Service Loads)

F_9 =	0.0 lbs	
F_8 =	0.0 lbs	
F_7 =	0.0 lbs	
F_6 =	0.0 lbs	
F_5 =	57.5 lbs	@ 96in (CM)
F_4 =	0.0 lbs	
F_3 =	0.0 lbs	
F_2 =	0.0 lbs	
F_1 =	0.0 lbs	
F_u =	9.0 lbs	@ 45in (CM)
Σf_i =	94.9 lbs	(@ Factored Loads)

Calculate Overturning Moment (Service), $M_{OT} = \Sigma f_i h_i$
M_{OT} = 5921 in-lbs
Calculate Resisting Moment (Service), M_{RST}
M_{RST} = 6600 in-lbs
Factor of Safety
FOS = 1.115
NO UPLIFT - ANCHORS REQUIRED

Check Single Frame / Bay Overturning Stability:

M_{OT} (LC#1) =	11677 in-lbs		M_{OT} (LC#2) =	5921 in-lbs	
M_{RST} (LC#1) =	18233 in-lbs		M_{RST} (LC#2) =	6600 in-lbs	
FOS=M_{RST} / M_{OT} =	1.561	≥ 1.5 No AB Reqd	FOS = M_{RST} / M_{OT} =	1.115	< 1.5 AB Reqd

--> ABs Reqd - FOS < 1.5 at LC#2

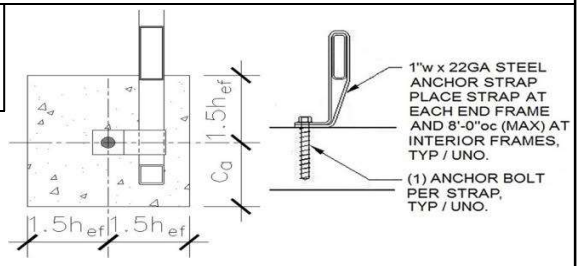

Base Reactions:

Reactions (Service Loads):	LC #1		LC #2	
R_h =	85 lbs		33 lbs	
R_v =	0 lbs	(No Uplift)	0 lbs	(No Uplift)
Overturning FOS =	1.561	>= 1.5	1.115	<1.5 AB Reqd
Sliding Restraint force, R_{RST} / FOS =	185lbs / 2.169 >= 1.5 OK		82lbs / 2.483 >= 1.5 OK	

Reactions (Factored Loads):	LC #1	LC #2
Base Shear (R_{uh}) =	244 lbs	95 lbs
Net Uplift (R_{uv}) =	0 lbs	0 lbs
Overturning + Gravity (P_u) =	1587 lbs	604 lbs

Tension Allowables

Steel Strength, ϕN_{sa} =	4219 lbs	<--ACI 318-14 Eq 17.4.1.2
Concrete Breakout, $(0.75)\phi N_{cbg}$ =	1713 lbs	<--ACI 318-14 Eq 17.4.2.1a
Pullout Strength, $(0.75)\phi N_{pn}$ =	NA	<--ACI 318-14 Eq 17.4.3.1

	LC #1		LC #2	
Factored Tension Load (N_u) =	0 lbs		0 lbs	
max tension stress ratio (TSR) =	0.000	OK	0.000	OK

Shear Allowables

Steel Strength, ϕV_{sa} =	2031 lbs	<--ACI 318-14 Eq 17.5.1.2c
Concrete breakout, ϕV_{cbq} =	1238 lbs	<--ACI 318-14 Eq 17.5.2.1b
Concrete pryout, ϕV_{cpq} =	2460 lbs	<--ACI 318-14 Eq 17.5.3.1b

	LC #1		LC #2	
Factored Shear Load (V_u) =	244 lbs		95 lbs	
Max shear stress ratio (VSR) =	0.197	OK	0.077	OK
Combined shear and tension stress ratio (TSR + VSR) =	0.197	< 1.2 OK - LC#1 (controls)		

Anchor Design (using "Cracked Concrete" Properties)

Try: 3/8" DIA Hilti Kwik Bolt-TZ2 (CS) Anchor - 2 1/2" embed.

Embedment =	2.5 in	
f'_c =	3500 psi	
e_n' =	0 in	<--- Eccen. Of Anchor
h_{ef} =	2 in	$1.5(h_{ef})$ = 3.000 in
c_a =	3.5 in	$1.5(c_a)$ = 5.250 in
Conc. thickness, t =	4 in	
# of Anchors, n =	1	- anchors per connection
S_X =	0 in	
A_{se} =	0.051 in^2	

USE: (1) 3/8" DIA Hilti Kwik Bolt-TZ2 (CS) Anchor - 2 1/2" embed. ICC REPORT #ESR-4266

JOHNSTON BURKHOLDER ASSOCIATES
consulting structural engineers
930 CENTRAL · KANSAS CITY, MO 64105
816.421.4200 · WWW.JBAENGR.COM

PROJECT NO:	SHEET NO:	OF:
2401802403	46	66
PROJECT NAME: #02403 - Puyallup, WA		
MADE BY: KSH	DATE: 04/19/24	
CHECKED BY:	DATE:	

Shelving / Double Sided 90" Tall "X" 5 Level 48X

IBC 2021 / ASCE 7-16 / 2016 RMI (ANSI/MH16.3-16)

Punching Shear Check:
(Design per ACI 318-14 section 14.5.5)

Max. Factored Vertical Load (P_u) =	1587	lbs
Slab Concrete f 'c =	3500	psi
Slab thickness (t) =	4	in.
Rack Post X-X =	2	in.
Rack Post Y-Y =	2	in.
b_o =	24.00	in.
β =	1.00	
V_n =	22718	lbs Eq. (22-10)
V_n max =	15107	lbs Eq. (22-10)
ϕV_n =	9064	lbs
$V_u/\phi V_n$ =	0.175	< 1.0 O.K.

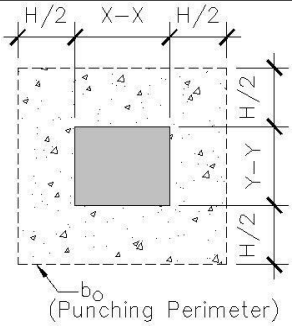

Slab tension based on Soil bearing area check:

Allowable soil bearing =	1500	psf
Max. Vertical Load (Service) (P) =	949	lbs
Area reqd. for bearing (A_{reqd}) =	0.63	ft^2
"b" distance =	9.54	in
Slab thickness (t) =	4.00	in
S = (1")$(t)^2$/6 =	2.67	in^3/in
ϕM_{nt} (tension allowable) = $\phi_t(7.5)[(f'_c)^{1/2}](S)$ =	710	in-lb/in
Factored uniform bearing, $w_u = P_u / A_{reqd}$ =	17.42	lb/in/in
$M_u = w_u L^2/3 = (w_u)[(b-(2''))/2)^2] / 3$ =	82.63	in-lb/in - Defl. End M1 = 42 in-lb/in
$M_u/\phi M_{nt}$ =	0.116	< 1.0 O.K.

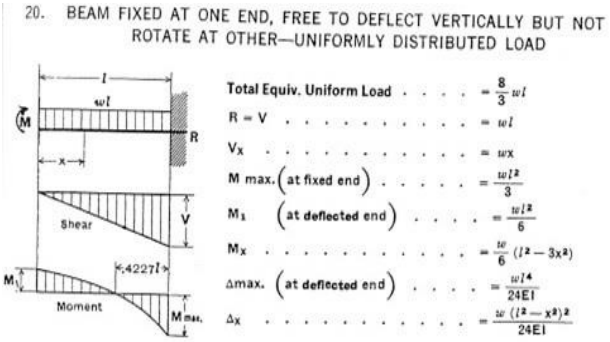

Shelving Fixture FOS Overturning with Resistance from Effective Weight of Slab on Grade:

Width of Single Rack =	33	in
Slab thickness (t) =	4.0	in
Modulus of Rupture, f_r = 7.5*SQRT(f'c) =	443.7	psi
Concrete Slab Section Modulus, S = $b(t)^2/6$ =	32.0	in^3/ft
Allowable Concrete Slab Bending Moment, $M_{all} = S*f_r$ =	1183.2	ft*lbs/ft
Effective Cantilever Span Length (L_c) at M_{all} =	6.9	ft
Total Length of Slab (l_c + Width of Single Rack) =	9.6	ft
Trib. Width of Slab = Trib width of Rack =	4.0	ft
Weight of Concrete Slab at Rack (P_{conc}) =	1926	lbs
Resisting Moment - Concrete Slab at Rack, $M_{RST(slab)} = P_{conc} * L_c/2$ =	111275	in*lbs
Load Combination #1: M_{OT} =	11677	in*lbs
$M_{RST(Rack)} + M_{RST(slab)}$ =	129507	in*lbs
Total Overturning FOS =	11.091	OK
Load Combination #2: M_{OT} =	5921	in*lbs
$M_{RST(Rack)} + M_{RST(slab)}$ =	117875	in*lbs
Total Overturning FOS =	19.907	OK

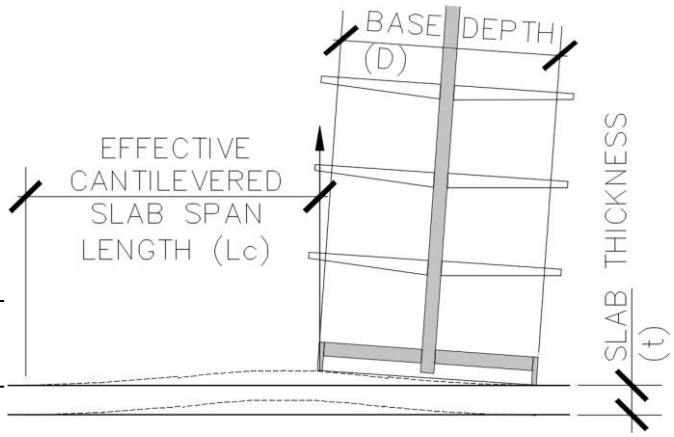

JOHNSTON BURKHOLDER ASSOCIATES
consulting structural engineers
930 CENTRAL · KANSAS CITY, MO 64105
816.421.4200 · WWW.JBAENGR.COM

PROJECT NO: 2401802403	SHEET NO: 47	OF: 66	
PROJECT NAME: #02403 - Puyallup, WA			
MADE BY: KSH	DATE: 04/19/24		
CHECKED BY:	DATE:		

Shelving / Double Sided | 90" Tall "X" 5 Level | 54X

IBC 2021 / ASCE 7-16 / 2016 RMI (ANSI/MH16.3-16)

Seismic Importance Factor = 1.5
Supported on Elevated Floor (Y/N): No
Total Load per shelf = 150 lbs <---assumes (2) shelves per level
# of Levels = 5 Level
Uniform Weight per level = 16.67 psf/shelf
Weight of Unit = 100 lbs
Upright Frame anchorage spacing (Trib width) = 4 ft (*Frames are assumed to be 4'-0" oc*)
Shelf depth (ea. side) = 27 in

		Shelf Load / Level / Frame
h_9 =	0 in	
h_8 =	0 in	
h_7 =	0 in	
h_6 =	0 in	
h_5 =	21 in	300 lbs
h_4 =	21 in	300 lbs
h_3 =	21 in	300 lbs
h_2 =	21 in	300 lbs
h_1 =	6 in	300 lbs

Total Shelf Height, H_t = 90 in Unit Height, H_u = 90 in
Unit Base Depth, D = 39 in

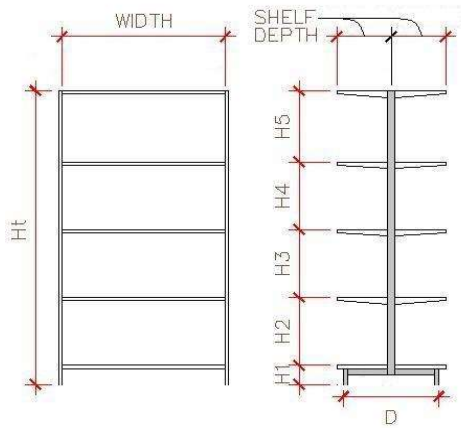

Overturning Stability (Load cases are per ASCE 7 sect. 15.5.3.6):

Load Case 1* [per RMI sect. 2.6.8(1) - PL=0.67(PL)]
[per RMI sect. 2.6.2, PL_{RF} = 1.0]
Seismic $(C_s)(I_p)$ = 0.315 W_s (Cross-Aisle)
$W_s = (0.67)(PL_{RF})((0.67)PL)+DL$ = 773.4 lbs
Base Shear, $V = C_s I_p W_s$ = 243.9 lbs
Horizontal forces per level, $F_x = C_{vx}V$ (RMI sect 2.6.6)
(Service Loads, E = 0.7)

F_9 =	0.0 lbs	@ 0 in (CM)
F_8 =	0.0 lbs	@ 0 in (CM)
F_7 =	0.0 lbs	@ 0 in (CM)
F_6 =	0.0 lbs	@ 0 in (CM)
F_5 =	56.1 lbs	@ 96 in (CM)
F_4 =	43.8 lbs	@ 75 in (CM)
F_3 =	31.5 lbs	@ 54 in (CM)
F_2 =	19.3 lbs	@ 33 in (CM)
F_1 =	7.0 lbs	@ 12 in (CM)
F_u =	13.1 lbs	@ 45 in (CM)
Σf_i =	243.9 lbs	(@ Factored Loads)

Note: (CM) = Product Center of Mass typically 6 inches above the top of shelf at each level.

Calculate Overturning Moment (Service), $M_{OT} = \Sigma f_i h_i$
M_{OT} = 11677 in-lbs
Calculate Resisting Moment (Service), M_{RST}
M_{RST} = 21548 in-lbs
Factor of Safety
FOS = 1.845
NO UPLIFT - NO ANCHORS REQUIRED

Load Case 2* [per RMI sect. 2.6.8(2) - PL=1.0(PL)]
[per RMI sect. 2.6.2, PL_{RF} = 1.0]
Seismic $(C_s)(I_p)$ = 0.315 W_s (Cross-Aisle)
$W_s = (0.67)(PL_{RF})((1)PL)+DL$ = 301.0 lbs
Base Shear, $V = C_s I_p W_s$ = 94.9 lbs
Horizontal forces per level, $F_x = C_{vx}V$ (RMI sect 2.6.6)
(Service Loads)

F_9 =	0.0 lbs	
F_8 =	0.0 lbs	
F_7 =	0.0 lbs	
F_6 =	0.0 lbs	
F_5 =	57.5 lbs	@ 96in (CM)
F_4 =	0.0 lbs	
F_3 =	0.0 lbs	
F_2 =	0.0 lbs	
F_1 =	0.0 lbs	
F_u =	9.0 lbs	@ 45in (CM)
Σf_i =	94.9 lbs	(@ Factored Loads)

Calculate Overturning Moment (Service), $M_{OT} = \Sigma f_i h_i$
M_{OT} = 5921 in-lbs
Calculate Resisting Moment (Service), M_{RST}
M_{RST} = 7800 in-lbs
Factor of Safety
FOS = 1.317
NO UPLIFT - ANCHORS REQUIRED

Check Single Frame / Bay Overturning Stability:

M_{OT} (LC#1) =	11677 in-lbs		M_{OT} (LC#2) =	5921 in-lbs	
M_{RST} (LC#1) =	21548 in-lbs		M_{RST} (LC#2) =	7800 in-lbs	
FOS=M_{RST} / M_{OT} =	1.845	≥ 1.5 No AB Reqd	FOS = M_{RST} / M_{OT} =	1.317	< 1.5 AB Reqd

--> ABs Reqd - FOS < 1.5 at LC#2

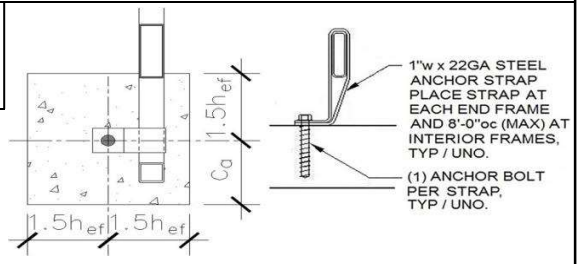

Base Reactions:

Reactions (Service Loads):	LC #1		LC #2	
R_h =	85 lbs		33 lbs	
R_v =	0 lbs	(No Uplift)	0 lbs	(No Uplift)
Overturning FOS =	1.845	>= 1.5	1.317	<1.5 AB Reqd
Sliding Restraint force, R_{RST} / FOS =	172lbs / 2.009 >= 1.5 OK		76lbs / 2.275 >= 1.5 OK	

Reactions (Factored Loads):	LC #1	LC #2
Base Shear (R_{uh}) =	244 lbs	95 lbs
Net Uplift (R_{uv}) =	0 lbs	0 lbs
Overturning + Gravity (P_u) =	1470 lbs	545 lbs

Tension Allowables

Steel Strength, ϕN_{sa} =	5675 lbs	<--ACI 318-14 Eq 17.4.1.2
Concrete Breakout, $(0.75)\phi N_{cbg}$ =	752 lbs	<--ACI 318-14 Eq 17.4.2.1a
Pullout Strength, $(0.75)\phi N_{pn}$ =	519 lbs	<--ACI 318-14 Eq 17.4.3.1

	LC #1		LC #2	
Factored Tension Load (N_u) =	0 lbs		0 lbs	
max tension stress ratio (TSR) =	0.000	OK	0.000	OK

Shear Allowables

Steel Strength, ϕV_{sa} =	1449 lbs	<--ACI 318-14 Eq 17.5.1.2c
Concrete breakout, ϕV_{cbq} =	1704 lbs	<--ACI 318-14 Eq 17.5.2.1b
Concrete pryout, ϕV_{cpq} =	1080 lbs	<--ACI 318-14 Eq 17.5.3.1b

	LC #1		LC #2	
Factored Shear Load (V_u) =	244 lbs		95 lbs	
Max shear stress ratio (VSR) =	0.226	OK	0.088	OK
Combined shear and tension stress ratio (TSR + VSR) =	0.226	< 1.2 OK - LC#1 (controls)		

Anchor Design (using "Cracked Concrete" Properties)

Try: 3/8"Ø DeWalt Screw Bolt+ Anchor - 2" embed.
Embedment = 2 in
f'_c = 3500 psi
e_n' = 0 in <--- Eccen. Of Anchor
h_{ef} = 1.33 in $1.5(h_{ef})$ = 1.995 in
c_a = 5 in $1.5(c_a)$ = 7.500 in
Conc. thickness, t = 4 in
# of Anchors, n = 1 - anchors per connection
S_X = 0 in
A_{se} = 0.094 in^2

USE: (1) 3/8"Ø DeWalt Screw Bolt+ Anchor - 2" embed. ICC REPORT #ESR-3889

JOHNSTON BURKHOLDER ASSOCIATES
consulting structural engineers
930 CENTRAL · KANSAS CITY, MO 64105
816.421.4200 · WWW.JBAENGR.COM

PROJECT NO:	SHEET NO:	OF:
2401802403	48	66
PROJECT NAME: #02403 - Puyallup, WA		
MADE BY: KSH	DATE: 04/19/24	
CHECKED BY:	DATE:	

Shelving / Double Sided 90" Tall "X" 5 Level 54X

IBC 2021 / ASCE 7-16 / 2016 RMI (ANSI/MH16.3-16)

Punching Shear Check:
(Design per ACI 318-14 section 14.5.5)

Max. Factored Vertical Load (P_u) =	1470	lbs
Slab Concrete f 'c =	3500	psi
Slab thickness (t) =	4	in.
Rack Post X-X =	2	in.
Rack Post Y-Y =	2	in.
b_o =	24.00	in.
β =	1.00	
V_n =	22718	lbs Eq. (22-10)
V_n max =	15107	lbs Eq. (22-10)
ϕV_n =	9064	lbs
$V_u/\phi V_n$ =	0.162	< 1.0 O.K.

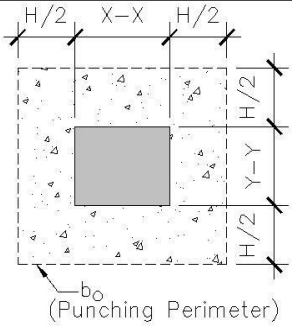

Slab tension based on Soil bearing area check:

Allowable soil bearing =	1500	psf
Max. Vertical Load (Service) (P) =	908	lbs
Area reqd. for bearing (A_{reqd}) =	0.61	ft^2
"b" distance =	9.34	in
Slab thickness (t) =	4.00	in
S = (1")$(t)^2$/6 =	2.67	in^3/in
ϕM_{nt} (tension allowable) = $\phi_t(7.5)[(f'_c)^{1/2}](S)$ =	710	in-lb/in
Factored uniform bearing, $w_u = P_u / A_{reqd}$ =	16.86	lb/in/in
$M_u = w_u L^2/3 = (w_u)[(b-(2''))/2)^2] / 3$ =	75.64	in-lb/in - Defl. End M1 = 38 in-lb/in
$M_u/\phi M_{nt}$ =	0.107	< 1.0 O.K.

20. BEAM FIXED AT ONE END, FREE TO DEFLECT VERTICALLY BUT NOT ROTATE AT OTHER—UNIFORMLY DISTRIBUTED LOAD

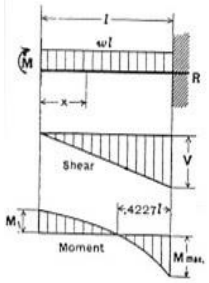

Total Equiv. Uniform Load . . . . $= \frac{8}{3}wl$
R = V . . . . . $= wl$
V_x . . . . . $= wx$
M max. (at fixed end) . . . . . $= \frac{wl^2}{3}$
M_1 (at deflected end) . . . . . $= \frac{wl^2}{6}$
M_x . . . . . $= \frac{w}{6}(l^2 - 3x^2)$
Δmax. (at deflected end) . . . . $= \frac{wl^4}{24EI}$
Δ_x . . . . . $= \frac{w(l^2 - x^2)^2}{24EI}$

Shelving Fixture FOS Overturning with Resistance from Effective Weight of Slab on Grade:

Width of Single Rack =	39	in
Slab thickness (t) =	4.0	in
Modulus of Rupture, f_r = 7.5*SQRT(f'c) =	443.7	psi
Concrete Slab Section Modulus, S = $b(t)^2$/6 =	32.0	in^3/ft
Allowable Concrete Slab Bending Moment, $M_{all} = S*f_r$ =	1183.2	ft*lbs/ft
Effective Cantilever Span Length (L_c) at M_{all} =	6.9	ft
Total Length of Slab (l_c + Width of Single Rack) =	10.1	ft
Trib. Width of Slab = Trib width of Rack =	4.0	ft
Weight of Concrete Slab at Rack (P_{conc}) =	2026	lbs
Resisting Moment - Concrete Slab at Rack, $M_{RST(slab)} = P_{conc} * L_c/2$ =	123130	in*lbs
Load Combination #1: M_{OT} =	11677	in*lbs
$M_{RST(Rack)} + M_{RST(slab)}$ =	144678	in*lbs
Total Overturning FOS =	12.390	OK
Load Combination #2: M_{OT} =	5921	in*lbs
$M_{RST(Rack)} + M_{RST(slab)}$ =	130930	in*lbs
Total Overturning FOS =	22.112	OK

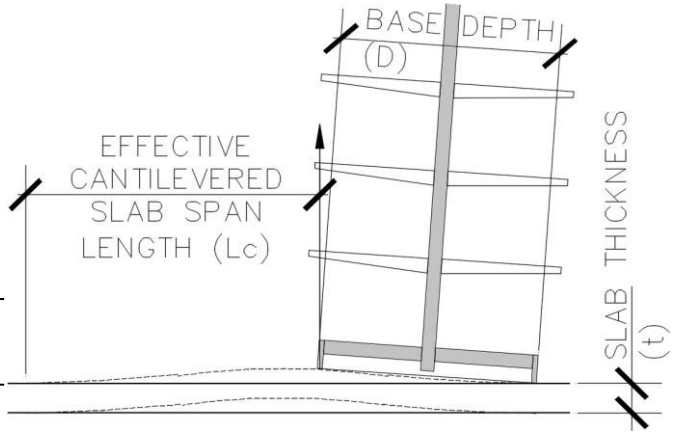

JOHNSTON BURKHOLDER ASSOCIATES
consulting structural engineers
930 CENTRAL · KANSAS CITY, MO 64105
816.421.4200 · WWW.JBAENGR.COM

PROJECT NO: 2401802403		SHEET NO: 49	OF: 66
PROJECT NAME: #02403 - Puyallup, WA			
MADE BY: KSH		DATE: 04/19/24	
CHECKED BY:		DATE:	

Storage Rack - Seismic Design — Rack AWS — 24/44-120 075A

IBC 2021 / ASCE 7-16 / 2016 RMI (ANSI/MH16.3-16)

Seismic Importance Factor (I_p) =	1.0	<--- No Public Access Allowed (Typ. at Back Stockroom / Grocery Storage Areas)
Supported on Elevated Floor (Y/N):	No	
Max. Weight per level (2 Pallets / shelf) =	1035 lbs/shelf	
Weight of Unit =	250 lbs	<--- Shipping weight per Manuf.
Rack Trib width (CL-to-CL of frames) =	96 in	Total Shelf Load
h_9 =	0 in	0 lbs
h_8 =	0 in	0 lbs
h_7 =	0 in	0 lbs
h_6 =	0 in	0 lbs
h_5 =	0 in	0 lbs
h_4 =	0 in	0 lbs
h_3 =	36 in	1035 lbs
h_2 =	48 in	1035 lbs
h_1 =	36 in	500 lbs
Total Shelf Height, H_t =	120 in	
Unit Height, H_u =	120 in	
Unit Base Depth, D =	24 in	

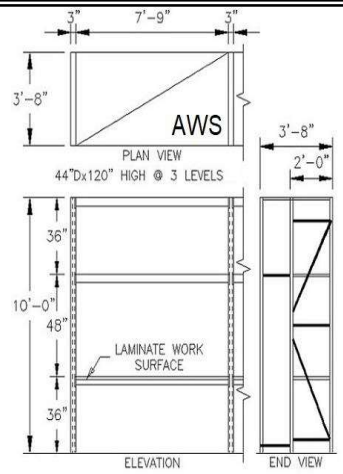

Note: Per ANSI MH16.1, Section 6.3, effective lengths may be determined by rational methods consistent with AISI or AISC. AISC Design by Second-Order Analysis, Section C2.2a is used. Notional loads are applied to gravity load cases and K=1.0 is used since the ratio of second-order drift to first-order drift (P-δ) / (P-Δ) < 1.1.

Overturning Stability (Load cases are per ASCE 7 sect. 15.5.3.6):

Load Case 1 [RMI sect. 2.6.8(1) - PL=0.67(PL)]
[RMI sect 2.6.2, PL_{RF} = 1.0]

Seismic $(C_s)(I_p)$ = 0.210 W_s (Braced)
0.076 W_s (Down Aisle)

$W_s = (0.67)(PL_{RF})((0.67)PL)+DL$ = 1403.7 lbs

Base Shear, $V = C_s I_p W_s$ = 295.1 lbs (Braced)
107.1 lbs (Down Aisle)

Horizontal forces / level, $F_x = C_{vx}V$ (RMI sect 2.6.6)
(Service Loads, E = 0.7)

F_9 =	0.0 lbs	@ 0 in (CM)
F_8 =	0.0 lbs	@ 0 in (CM)
F_7 =	0.0 lbs	@ 0 in (CM)
F_6 =	0.0 lbs	@ 0 in (CM)
F_5 =	0.0 lbs	@ 0 in (CM)
F_4 =	0.0 lbs	@ 0 in (CM)
F_3 =	98.8 lbs	@ 140 in (CM)
F_2 =	72.0 lbs	@ 102 in (CM)
F_1 =	20.5 lbs	@ 60 in (CM)
F_u =	15.3 lbs	@ 60 in (CM)

Note: (CM) = Product Center of Mass typically 20 inches above the top of shelf at each level.

Calculate Overturning Moment (Service), $M_{OT} = \Sigma f_i h_i$
M_{OT} = 23327 in-lbs
Calculate Resisting Moment (Service), M_{RST}
M_{RST} = 23663 in-lbs
Factor of Safety, $FOS_{OT} = M_{RST}/M_{OT}$ = 1.014

NO UPLIFT - ANCHORS REQUIRED

Load Case 2 [RMI sect. 2.6.8(2), PL=1.0(PL)]
[RMI 2.6.2, PL_{RF}=1.0]

Seismic $(C_s)(I_p)$ = 0.210 W_s (Braced)
0.076 W_s (Down Aisle)

$W_s = (0.67)(PL_{RF})((1)PL)+DL$ = 943.5 lbs

Base Shear, $V = C_s I_p W_s$ = 198.4 lbs (Braced)
72.0 lbs (Down Aisle)

Horizontal forces / level, $F_x = C_{vx}V$ (RMI sect 2.6.6)
(Service Loads)

F_9 =	0.0 lbs	
F_8 =	0.0 lbs	
F_7 =	0.0 lbs	
F_6 =	0.0 lbs	
F_5 =	0.0 lbs	
F_4 =	0.0 lbs	
F_3 =	125.8 lbs	@ 140 in (CM)
F_2 =	0.0 lbs	
F_1 =	0.0 lbs	
F_u =	13.0 lbs	@ 60 in (CM)

Calculate Overturning Moment (Service), $M_{OT} = \Sigma f_i h_i$
M_{OT} = 18397 in-lbs
Calculate Resisting Moment (Service), M_{RST}
M_{RST} = 15420 in-lbs
Factor of Safety, $FOS_{OT} = M_{RST}/M_{OT}$ = 0.838

UPLIFT - ANCHORS REQUIRED

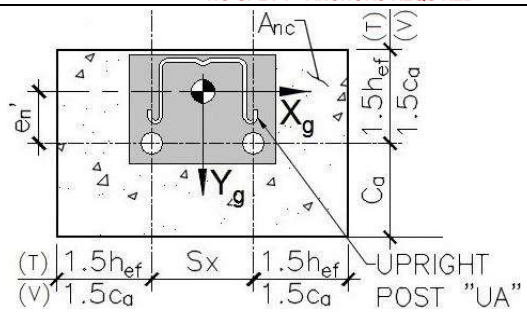

Anchor Design (using "Cracked Concrete" Properties)

Upright Post Type = UA
Try: 1/2" DIA Hilti Kwik Bolt-TZ2 (CS) Anchor - 2 1/2" embed.
Embedment (h_{nom}) = 2.5 in
f_c' = 3500 psi
e_n' = 1.875 in <-- Eccen. of Anchor
h_{ef} = 2 in $1.5(h_{ef})$ = 3.000 in
Conc. thickness, t = 5 in $1.5(C_a)$ = 15.000 in
# of Anchors, n = 1
Sx = 0.00 in
Sy = 0.00 in
A_{se} = 0.099 in^2

Base Reactions:

	LC #1		LC #2	
R_h =	103 lbs		69 lbs	
R_v =	0 lbs		124 lbs	
Overturning FOS =	1.014	< 1.5 ABs Reqd	0.838	< 1.5 ABs Reqd
Sliding Restraint, R_{RST}/FOS =	418lbs / 4.051	>= 1.5 OK	310lbs / 4.459	>= 1.5 OK
Reactions (Factored Loads):	LC #1		LC #2	
Base Shear (R_{uh}) =	295 lbs		198 lbs	
Net Uplift (R_{uv}) =	0 lbs		1720 lbs	
Overturning + Gravity (P_u) =	3552 lbs		2332 lbs	
Tension Allowables				
Steel Strength, ϕN_{sa} =	7306 lbs	<--ACI 318-14 Eq 17.4.1.2		
Concrete Breakout, $(0.75)\phi N_{cbq}$ =	1713 lbs	<--ACI 318-14 Eq 17.4.2.1b		
Pullout Strength, $(0.75)\phi N_{pn}$ =	NA	<--ACI 318-14 Eq 17.4.3.1		
Factored Tension Load, (N_u) =	0 lbs	(LC #1)	1720 lbs	(LC #2)
max tension stress ratio (TSR) =	0.000	OK (LC#1)	1.004	OK (LC#2)
Shear Allowables				
Steel Strength, ϕV_{sa} =	3321 lbs	<--ACI 318-14 Eq 17.5.1.2c		
Concrete breakout (Yg), ϕV_{cbq} =	5702 lbs	<--ACI 318-14 Eq 17.5.2.1b		
Concrete breakout (Xg), ϕV_{cbq} =	5069 lbs	<--ACI 318-14 Eq 17.5.2.1b		
Concrete pryout, ϕV_{cpq} =	2460 lbs	<--ACI 318-14 Eq 17.5.3.1b		
	LC #1		LC #2	
Factored Shear Load (V_u) : Braced =	295 lbs		198 lbs	
Down Aisle =	107 lbs		72 lbs	
Max shear stress ratio (VSR) : Braced =	0.120	OK	0.081	OK
Down Aisle =	0.044	OK	0.029	OK
Braced (TSR+VSR <= 1.2) =	1.085	<= 1.2 OK - LC #2 Controls		
Down Aisle (VSR <= 1.0) =	0.044	OK - LC #1 Controls		

USE: (1) 1/2" DIA Hilti Kwik Bolt-TZ2 (CS) Anchor - 2 1/2" embed. ICC REPORT #ESR-4266

JOHNSTON BURKHOLDER ASSOCIATES
consulting structural engineers
930 CENTRAL · KANSAS CITY, MO 64105
816.421.4200 · WWW.JBAENGR.COM

PROJECT NO: 2401802403	SHEET NO: 50	OF: 66
PROJECT NAME: #02403 - Puyallup, WA		
MADE BY: KSH	DATE: 04/19/24	
CHECKED BY:	DATE:	

Storage Rack - Seismic Design Rack AWS 24/44-120 075A

IBC 2021 / ASCE 7-16 / 2016 RMI (ANSI/MH16.3-16)

Punching Shear Check:
(Design per ACI 318-14 section 14.5.5)

Max. Factored Vertical Load (P_u) =	3552	lbs
Slab Concrete f'c =	3500	psi
Slab thickness (t) =	5	in.
Rack Post X-X =	5.00	in.
Rack Post Y-Y =	3.75	in.
b_o =	37.50	in.
β =	1.33	
V_n =	36975 lbs	Eq. (22-10)
V_n max =	29506 lbs	Eq. (22-10)
ϕV_n =	17704 lbs	
$V_u/\phi V_n$ =	0.201 < 1.0 O.K.	

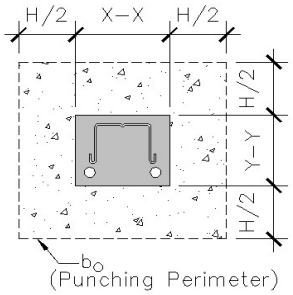

Max Vertical Load (ASD) - RMI, sect 2.1 - LC#4:
P = (1+0.11Sds)DL+(3/4)[(1+0.14Sds)PL+(0.7)EL]

S_{DS} =	0.841	(Ip=1)
DL = (Frame Wt/2) =	125	lbs
PL = Σ(Shelf Load h_1 - h_9)/2 =	1285	lbs
EL = $M_{OT, LC\#1}$ / ((0.7)(D)) =	2073	lbs
P =	1943 lbs <--- At Each Post	

Max Vertical Load (LRFD) - RMI, sect 2.2 - LC#5:
P = (1.2+0.2Sds)DL + (0.85+0.2Sds)PL + EL
P_u = 3552 lbs <--- At Each Post

Slab tension based on Soil bearing area check:

Allowable soil bearing =	1500	psf
Max. Service Vertical Load (P) =	1943	lbs
Area reqd. for bearing (A_{reqd}) =	1.30	ft^2
"b" distance =	13.66	in
Slab thickness (t) =	5.00	in
S = (1")$(t)^2$/6 =	4.17	in^3/in
ϕM_{nt} (tension allowable) = f_t*7.5*[$(f'_c)^{1/2}$]*S =	1109.26	in-lb/in
Factored uniform bearing, w_u = P_u / A_{reqd} =	19.04	lb/in/in
M_u = $wL^2/3$ = $(w_u)[(b-\min(X-X,Y-Y))/2)^2]$ / 3 =	155.77	in-lb/in - Defl. End M1 = 78 in-lb/in
$M_u/\phi M_{nt}$ =	0.140	< 1.0 O.K.

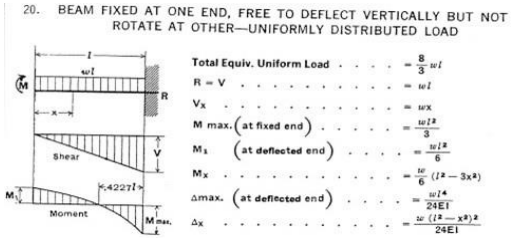

Rack FOS Overturning with Resistance from Effective Weight of Slab on Grade:

Width of Single Rack =	24	in
Slab thickness (t) =	5.0	in
Modulus of Rupture, f_r = 7.5*SQRT(f'c) =	443.7	psi
Concrete Slab Section Modulus, S = b$(t)^2$/6 =	50.0	in^3/ft
Allowable Concrete Slab Bending Moment, M_{all}/FS = S*f_r/1.5 =	1232.5	ft*lbs/ft
Effective Cantilever Span Length (l_c) at M_{all} =	6.3	ft
Total Length of Slab (l_c + Width of Single Rack) =	8.3	ft
Trib. Width of Slab = Trib width of Rack =	8.0	ft
Weight of Concrete Slab at Rack (P_{conc}) =	4140.1	lbs
Resisting Moment - Concrete Slab at Rack, $M_{RST(slab)}$ = P_{conc} * l_c/2 =	205684	in*lbs
Load Combination #1: M_{OT} =	23327	in*lbs
$M_{RST(Rack)}$ + $M_{RST(slab)}$ =	229346	in*lbs
Total Overturning FOS =	9.832	OK
Load Combination #2: M_{OT} =	18397	in*lbs
$M_{RST(Rack)}$ + $M_{RST(slab)}$ =	221104	in*lbs
Total Overturning FOS =	12.018	OK

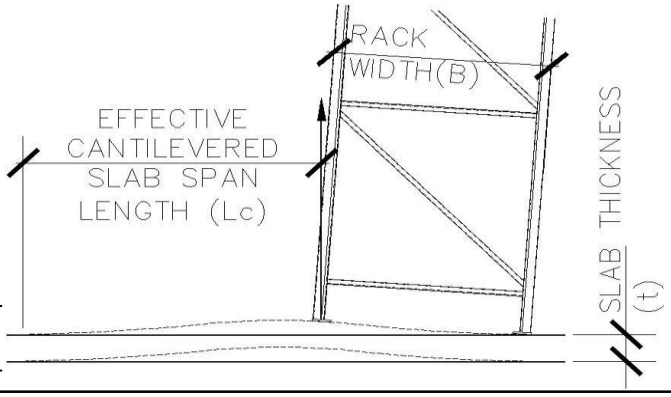

Upright Frame Member/Connection Design:

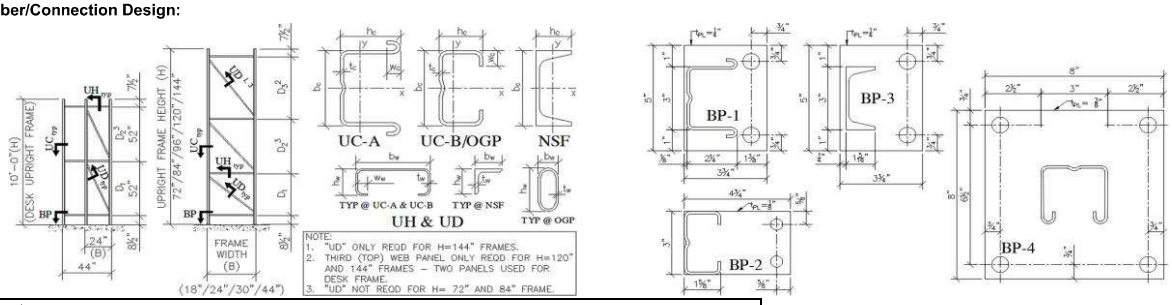

Upright Frame Geometry

Height, H (in)	Width, B (in)	Panel - D_1, in	Panel - D_2, in	Panel - D_3, in	Frame Post Type	Base PL Type	Frame Type
120	24	52	52	0	UA	BP-1	Desk

Upright Column (UC) Section Properties

Mark :	UCA300x225x0075					
b_c (in)	h_c (in)	t_c (in)	w_c (in)	A_g (in^2)	A_n(in^2)	x_{bar} (in)
3.000	2.250	0.075	0.500	0.637	0.511	0.946
I_x (in^4)	S_x (in^3)	I_y (in^4)	S_y (in^3)	C_w (in^6)	J (in^4)	r_o (in)
0.937	0.511	0.387	0.297	0.514	0.00119	2.502
r_x (in) =	1.354	r_y (in) =	0.870			

Upright Frame Horizontal (UH) / Diagonal (UD) Brace Section Properties

Mark :	C275x1063x0062					
b_w (in)	h_w (in)	t_w (in)	w_w (in)	A_g (in^2)	x_{bar}(in)	x_o (in)
2.750	1.063	0.062	0.438	0.325	0.352	0.834
I_x (in^4)	S_x (in^3)	I_y (in^4)	S_y (in^3)	C_w (in^6)	J (in^4)	r_o (in)
0.360	0.262	0.050	0.070	0.093	0.00042	1.399
r_x (in) =	1.053	r_y (in) =	0.391			

Upright Frame Shelf Beam Section Properties

Mark :	B410x250x0066		
d (in)	b (in)	c_h (in)	c_w (in)
4.100	2.500	1.625	0.875
t (in)	I_x (in^4)	S_x (in^3)	r_x (in)
0.066	1.716	0.792	1.441
A_g (in^2)	I_y (in^4)	S_y (in^3)	r_y (in)
0.827	0.761	0.557	0.960
x_{bar} (in) =	1.133	y_{bar} (in) =	1.932

Upright Post Base Plate Design:

Check for Axial Compression, P_{max} :

Base Plate Type =	BP-1	
Base Plate Depth =	5.00	in
Base Plate Width =	3.75	in
Default Plate Thickness =	0.2500	in
Base Plater Area, A_{BP} =	18.75	in^2
Upright Width, b_c =	3.000	in
Upright Depth, h_c =	2.250	in
Upright Post Brg Area, A_{Post} =	6.75	in^2
A_{reqd} / A_{Post} =	0.396	< 1.0 O.K.
P_{max} (per RISA) =	6554	lbs <--- Using Strength Design Load Combinations per RMI, sect. 2.2
T_{max} (per RISA) =	2021	lbs
Design Bearing Pressure, f_p =	349.55	psi
Required Bearing Area, $A_{reqd} = P_{max}/(0.7f'_c)$ =	2.6751	in^2

Upright Frame Steel Material:

ASTM A570, Grade 55

Fy =	55,000	psi
Fu =	70,000	psi
E =	29,000	ksi

<---- Base Plate Size and Thickness is acceptable for Axial Compression

Check for Axial Tension, T_{max} :

Tension force per bolt, f_t =	2021.00	lbs
Bolt CL dist to face of Post =	0.25	in
Effective Plate Width, b_{eff} =	3.75	in

Min. Thickness required, t_{pl} = 0.11078 in <--- Base Plate Thickness is Adequate

Shelf Beam End Connections (2 Lug Connector)

ASTM- A570, GR. 35 (F_y= 55 ksi, F_u= 70 ksi) Ω_v = 1.6 Ω_b = 1.67

Beam End Connector Bending Capacity check:

λ_p = 0.54*SQRT(E/Fy) =	12.3997	λ_{min}, b/t =	4.6667	< λ_p
Connector PL Thickness, t =	0.1875	in	$A_{lug} = (t)(b_{lug\ h})$ =	0.16406 in^2
Net Lug width, b_{lug} =	0.6563	in	$A_{brg\ col} = (t_c)(b_{lug\ h})$ =	0.06563 in^2
Min. Beam Depth, H_{bm} =	4.100	in	d_{CL}= 4"+ $b_{lug\ h}$ - $b_{lug\ h}$/2 =	4.4375 in
Net Lug Height, $b_{lug\ h}$ =	0.875	in		
Uniform beam load, w =	64.7	lb/ft <--- (1/2 Max. Shelf Load) / (Rack Trib width)		

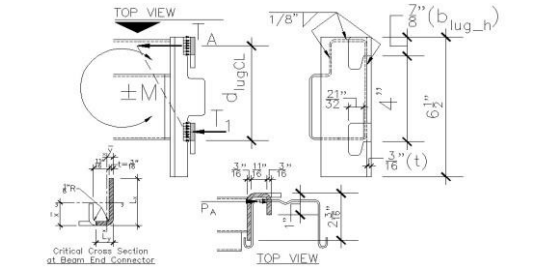

Beam End Section at 2 Lug Connector

Determine max. T_A for connector lug (shear or bearing on column):

$V_a = V_n/\Omega_v = 0.6A_{lug}F_y/\Omega_v$ =	3384	lbs <--- Shear at Lug tab
$P_a = (A_{brg\ col})(2.1)F_y/\Omega_b$ =	4539	lbs <--- Lug Brg on Column Wall
$T_A = \min(V_a, P_a)$ =	3384	lbs
$M_A = (T_A)(d_{CL})+(T_1)(b_{lug\ h}/2) + M_{x\ pl\ all}$ =	19940	in-lbs
M_{lat} (per RISA, Joint J47) =	1800	in-lbs
$M_{gravity} = (1/2)[wL^2/12]$ =	2070	in-lbs
Total Connector Moment, $M = M_{lat}+M_{grav}$ =	3870	in-lbs
M / M_A =	0.194	< 1.0 O.K.

Connector Plate Bending Capacity:

$A_{g\ pl}$ =	0.5215 in^2		
$r_o = r_i + t$ =	0.3125 in	L_x (long leg) =	2.1875 in
r_i =	0.1250 in	L_y(short leg) =	0.8750 in
x_{bar} =	0.8907 in	y_{bar} =	0.2121 in
I_x =	0.0199 in^4	$S_x = I_x / y_{bar}$ =	0.0938 in^3

$M_{x\ pl\ all}$ = (bent about Long Leg - (x-axis)) = $(1.5)(F_y)(S_x)/\Omega_b$ = 4632 in-lbs (AISC Eq. F10-1)

Shear Capacity check:

$V_a = V_n/\Omega_v = 0.6A_{lug}F_y/\Omega_v$ =	3384	lbs / lug
V (Impact) =	258.75	lbs - 25% Max. Shelf Load at beam end (RMI section 2.3)
V (per RISA, member SB42) =	587	lbs - total beam end shear
V / V_A =	0.125	< 1.0 O.K.

Beam to Connector Weld check:

Shelf Beam Wall thickness, t_{beam} =	0.075	in
Shelf Beam Depth, $H_{bm} = H_{weld}$ =	4.100	in
Top Beam Flange width, B_{weld} =	1.625	in
Beam Haunch depth, Y_{weld} =	1.500	in
Corner offset distance, d_{corner} =	0.200	in
Vertical Weld length, L_1 =	3.700	in
Top Weld length, L_2 =	1.225	in
Vertical Weld length, L_3 =	1.175	in
Total Length of Weld, L_w =	6.100	in
Distance to Y-axis Centroid, =	0.47618	in
Distance to X-axis Centroid, =	2.70487	in
Moment Interia of Weld - X-axis, $I_{x\ weld}$ =	0.71829	in^4
Moment Interia of Weld - Y-axis, $I_{y\ weld}$ =	0.23701	in^4
Polar Moment of Inertia, $I_p = I_x + I_y$ =	0.95530	in^4
$F_{w\ all}$= $[(0.6)F_{exx}/\Omega_{weld}]*(1+0.5\sin^{1.5}(\Theta))$ =	31500	psi
$M_{all} = (F_{w\ all})(I_p)/c$ =	12013	in-lbs
Total Connector Moment, $M = M_{lat}+M_{grav}$ =	3870	in-lbs
M / M_{all} =	0.322	< 1.0 O.K.
Interior Bend Radius =	0.125	in
Fillet Weld leg width =	0.125	in
Weld throat width, w_w =	0.08839	in
Ω_{weld} =	2.00	
F_{exx} =	70	ksi
	2.73	in <--- distance to bottom of L_3

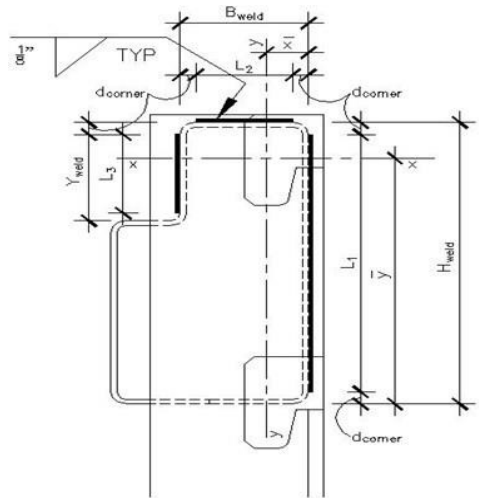

JOHNSTON BURKHOLDER ASSOCIATES
consulting structural engineers
930 CENTRAL · KANSAS CITY, MO 64105
816.421.4200 · WWW.JBAENGR.COM

PROJECT NO: 2401802403		SHEET NO: 52	OF: 66
PROJECT NAME: #02403 - Puyallup, WA			
MADE BY: KSH		DATE: 04/19/24	
CHECKED BY:		DATE:	

Storage Rack - Seismic Design — Rack B — 44-120 125S

IBC 2021 / ASCE 7-16 / 2016 RMI (ANSI/MH16.3-16)

Seismic Importance Factor (I_p) =	1.0	<--- No Public Access Allowed (Typ. at Back Stockroom / Grocery Storage Areas)
Supported on Elevated Floor (Y/N):	No	
Max. Weight per level (2 Pallets / shelf) =	3300 lbs/shelf	
Weight of Unit =	250 lbs	<--- Shipping weight per Manuf.
Rack Trib width (CL-to-CL of frames) =	96 in	Total Shelf Load
h_9 =	0 in	0 lbs
h_8 =	0 in	0 lbs
h_7 =	0 in	0 lbs
h_6 =	0 in	0 lbs
h_5 =	0 in	0 lbs
h_4 =	36 in	3300 lbs
h_3 =	36 in	3300 lbs
h_2 =	36 in	3300 lbs
h_1 =	12 in	3300 lbs
Total Shelf Height, H_t =	120 in	
Unit Height, H_u =	120 in	
Unit Base Depth, D =	44 in	

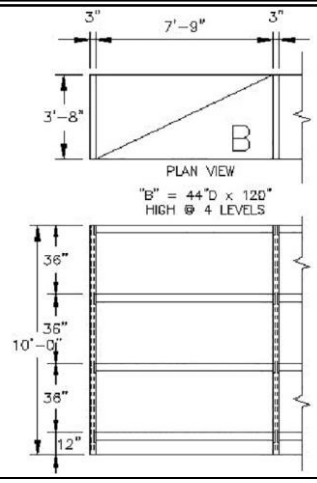

Note: Per ANSI MH16.1, Section 6.3, effective lengths may be determined by rational methods consistent with AISI or AISC. AISC Design by Second-Order Analysis, Section C2.2a is used. Notional loads are applied to gravity load cases and K=1.0 is used since the ratio of second-order drift to first-order drift (P-δ) / (P-Δ) < 1.1.

Overturning Stability (Load cases are per ASCE 7 sect. 15.5.3.6):

Load Case 1 [RMI sect. 2.6.8(1) - PL=0.67(PL)]
[RMI sect 2.6.2, PL_{RF} = 1.0]

Seismic $(C_s)(I_p)$ = 0.210 W_s (Braced)
0.076 W_s (Down Aisle)

$W_s = (0.67)(PL_{RF})((0.67)PL)+DL$ = 6175.5 lbs
Base Shear, $V = C_sI_pW_s$ = 1298.4 lbs (Braced)
471.1 lbs (Down Aisle)

Horizontal forces / level, $F_x = C_{vx}V$ (RMI sect 2.6.6)
(Service Loads, E = 0.7)

F_9 =	0.0 lbs	@ 0 in (CM)
F_8 =	0.0 lbs	@ 0 in (CM)
F_7 =	0.0 lbs	@ 0 in (CM)
F_6 =	0.0 lbs	@ 0 in (CM)
F_5 =	0.0 lbs	@ 0 in (CM)
F_4 =	375.2 lbs	@ 144 in (CM)
F_3 =	265.8 lbs	@ 102 in (CM)
F_2 =	172.0 lbs	@ 66 in (CM)
F_1 =	78.2 lbs	@ 30 in (CM)
F_u =	17.7 lbs	@ 60 in (CM)

Note: (CM) = Product Center of Mass typically 20 inches above the top of shelf at each level.

Calculate Overturning Moment (Service), $M_{OT} = \Sigma f_i h_i$
M_{OT} = 95903 in-lbs
Calculate Resisting Moment (Service), M_{RST}
M_{RST} = 200068 in-lbs
Factor of Safety, $FOS_{OT} = M_{RST}/M_{OT}$ = 2.086
NO UPLIFT - NO ANCHORS REQUIRED

Load Case 2 [RMI sect. 2.6.8(2), PL=1.0(PL)]
[RMI 2.6.2, PL_{RF}=1.0]

Seismic $(C_s)(I_p)$ = 0.210 W_s (Braced)
0.076 W_s (Down Aisle)

$W_s = (0.67)(PL_{RF})((1)PL)+DL$ = 2461.0 lbs
Base Shear, $V = C_sI_pW_s$ = 517.4 lbs (Braced)
187.7 lbs (Down Aisle)

Horizontal forces / level, $F_x = C_{vx}V$ (RMI sect 2.6.6)
(Service Loads)

F_9 =	0.0 lbs	
F_8 =	0.0 lbs	
F_7 =	0.0 lbs	
F_6 =	0.0 lbs	
F_5 =	0.0 lbs	
F_4 =	350.8 lbs	@ 140 in (CM)
F_3 =	0.0 lbs	
F_2 =	0.0 lbs	
F_1 =	0.0 lbs	
F_u =	11.4 lbs	@ 60 in (CM)

Calculate Overturning Moment (Service), $M_{OT} = \Sigma f_i h_i$
M_{OT} = 49796 in-lbs
Calculate Resisting Moment (Service), M_{RST}
M_{RST} = 78100 in-lbs
Factor of Safety, $FOS_{OT} = M_{RST}/M_{OT}$ = 1.568
NO UPLIFT - NO ANCHORS REQUIRED

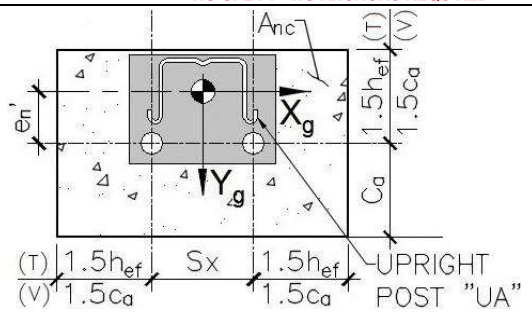

Anchor Design (using "Cracked Concrete" Properties)

Upright Post Type = UA
Try: 1/2" DIA Hilti Kwik Bolt-TZ2 (CS) Anchor - 2 1/2" embed.
Embedment (h_{nom}) = 2.5 in
f_c' = 3500 psi
e_n' = 1.875 in <-- Eccen. of Anchor
h_{ef} = 2 in 1.5(h_{ef}) = 3.000 in
Conc. thickness, t = 4 in 1.5(C_a) = 15.000 in
# of Anchors, n = 1
Sx = 0.00 in
Sy = 0.00 in
A_{se} = 0.099 in^2

Base Reactions:

	LC #1		LC #2	
R_h =	454 lbs		181 lbs	
R_v =	0 lbs		0 lbs	
Overturning FOS =	2.086	>= 1.5	1.568	>= 1.5
Sliding Restraint, R_{RST}/FOS =	1317lbs / 2.898	>= 1.5 OK	591lbs / 3.261	>= 1.5 OK
Reactions (Factored Loads):	LC #1		LC #2	
Base Shear (R_{uh}) =	1298 lbs		517 lbs	
Net Uplift (R_{uv}) =	0 lbs		0 lbs	
Overturning + Gravity (P_u) =	11539 lbs		4264 lbs	
Tension Allowables				
Steel Strength, ϕN_{sa} =	7306 lbs	<--ACI 318-14 Eq 17.4.1.2		
Concrete Breakout, (0.75)ϕN_{cbg} =	1713 lbs	<--ACI 318-14 Eq 17.4.2.1b		
Pullout Strength, (0.75)ϕN_{pn} =	NA	<--ACI 318-14 Eq 17.4.3.1		
Factored Tension Load, (N_u) =	0 lbs	(LC #1)	0 lbs	(LC #2)
max tension stress ratio (TSR) =	0.000	OK (LC#1)	0.000	OK (LC#2)
Shear Allowables				
Steel Strength, ϕV_{sa} =	3321 lbs	<--ACI 318-14 Eq 17.5.1.2c		
Concrete breakout (Yg), ϕV_{cbg} =	5702 lbs	<--ACI 318-14 Eq 17.5.2.1b		
Concrete breakout (Xg), ϕV_{cbg} =	5069 lbs	<--ACI 318-14 Eq 17.5.2.1b		
Concrete pryout, ϕV_{cpg} =	2460 lbs	<--ACI 318-14 Eq 17.5.3.1b		
	LC #1		LC #2	
Factored Shear Load (V_u) : Braced =	1298 lbs		517 lbs	
Down Aisle =	471 lbs		188 lbs	
Max shear stress ratio (VSR) : Braced =	0.528	OK	0.210	OK
Down Aisle =	0.192	OK	0.076	OK
Braced (TSR+VSR <= 1.2) =	0.528	<= 1.2 OK - LC #1 Controls		
Down Aisle (VSR <= 1.0) =	0.192	OK - LC #1 Controls		

USE: (1) 1/2" DIA Hilti Kwik Bolt-TZ2 (CS) Anchor - 2 1/2" embed. ICC REPORT #ESR-4266

JOHNSTON BURKHOLDER ASSOCIATES
consulting structural engineers
930 CENTRAL · KANSAS CITY, MO 64105
816.421.4200 · WWW.JBAENGR.COM

PROJECT NO: 2401802403	SHEET NO: 53	OF: 66
PROJECT NAME: #02403 - Puyallup, WA		
MADE BY: KSH	DATE: 04/19/24	
CHECKED BY:	DATE:	

Storage Rack - Seismic Design Rack B 44-120 125S

IBC 2021 / ASCE 7-16 / 2016 RMI (ANSI/MH16.3-16)

Punching Shear Check:
(Design per ACI 318-14 section 14.5.5)

Max. Factored Vertical Load (P_u) =	11539	lbs
Slab Concrete f'c =	3500	psi
Slab thickness (t) =	4	in.
Rack Post X-X =	5.00	in.
Rack Post Y-Y =	3.75	in.
b_o =	33.50	in.
β =	1.33	
V_n =	26425 lbs	Eq. (22-10)
V_n max =	21087 lbs	Eq. (22-10)
ϕV_n =	12652 lbs	
$V_u/\phi V_n$ =	0.912 < 1.0 O.K.	

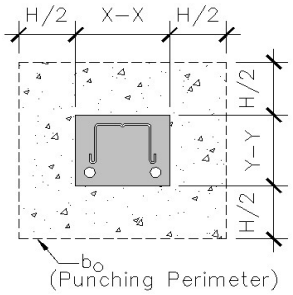

Max Vertical Load (ASD) - RMI, sect 2.1 - LC#4:
P = (1+0.11Sds)DL+(3/4)[(1+0.14Sds)PL+(0.7)EL]

S_{DS} =	0.841	(Ip=1)
DL = (Frame Wt/2) =	125	lbs
PL = Σ(Shelf Load h_1 - h_9)/2 =	6600	lbs
EL = $M_{OT, LC\#1}$ / ((0.7)(D)) =	4648	lbs
P =	7304 lbs <--- At Each Post	

Max Vertical Load (LRFD) - RMI, sect 2.2 - LC#5:
P = (1.2+0.2Sds)DL + (0.85+0.2Sds)PL + EL
P_u = 11539 lbs <--- At Each Post

Slab tension based on Soil bearing area check:

Allowable soil bearing =	1500	psf
Max. Service Vertical Load (P) =	7304	lbs
Area reqd. for bearing (A_{reqd}) =	4.87	ft^2
"b" distance =	26.48	in
Slab thickness (t) =	4.00	in
S = (1")$(t)^2$/6 =	2.67	in^3/in
ϕM_{nt} (tension allowable) = f_t*7.5*$[(f'_c)^{1/2}]$*S =	709.93	in-lb/in
Factored uniform bearing, w_u = P_u / A_{reqd} =	16.46	lb/in/in
M_u = $wL^2/3$ = $(w_u)[(b-min(X-X,Y-Y))/2)^2]$ / 3 =	708.52	in-lb/in - Defl. End M1 = 355 in-lb/in
$M_u/\phi M_{nt}$ =	0.998	< 1.0 O.K.

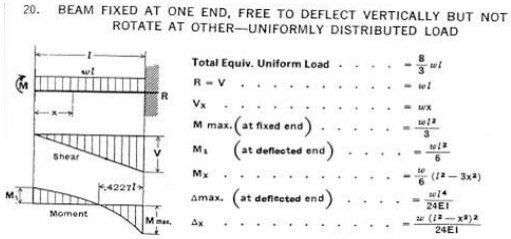

Rack FOS Overturning with Resistance from Effective Weight of Slab on Grade:

Width of Single Rack =	44	in
Slab thickness (t) =	4.0	in
Modulus of Rupture, f_r = 7.5*SQRT(f'c) =	443.7	psi
Concrete Slab Section Modulus, S = b$(t)^2$/6 =	32.0	in^3/ft
Allowable Concrete Slab Bending Moment, M_{all}/FS = S*f_r/1.5 =	788.8	ft*lbs/ft
Effective Cantilever Span Length (l_c) at M_{all} =	5.6	ft
Total Length of Slab (l_c + Width of Single Rack) =	9.3	ft
Trib. Width of Slab = Trib width of Rack =	8.0	ft
Weight of Concrete Slab at Rack (P_{conc}) =	3713.5	lbs
Resisting Moment - Concrete Slab at Rack, $M_{RST(slab)}$ = P_{conc} * l_c/2 =	206854	in*lbs
Load Combination #1: M_{OT} =	95903	in*lbs
$M_{RST(Rack)}$ + $M_{RST(slab)}$ =	406922	in*lbs
Total Overturning FOS =	4.243	OK
Load Combination #2: M_{OT} =	49796	in*lbs
$M_{RST(Rack)}$ + $M_{RST(slab)}$ =	284954	in*lbs
Total Overturning FOS =	5.722	OK

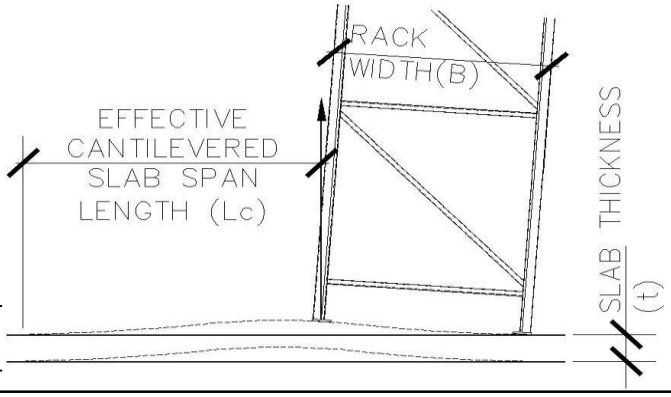

Upright Frame Member/Connection Design:

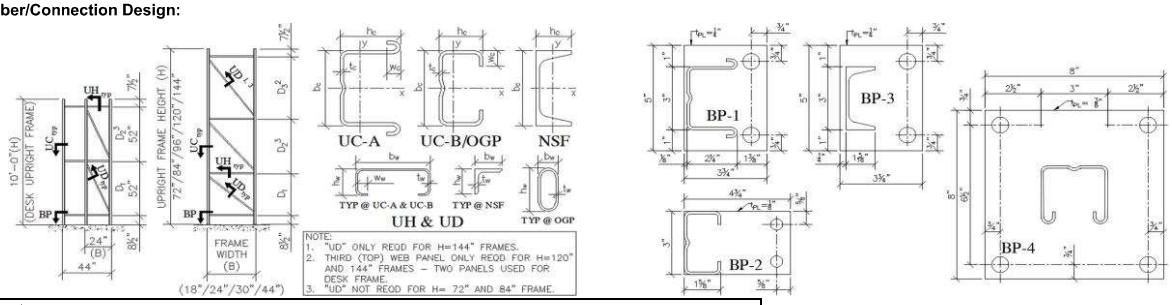

Upright Frame Geometry

Height, H (in)	Width, B (in)	Panel - D_1, in	Panel - D_2, in	Panel - D_3, in	Frame Post Type	Base PL Type	Frame Type
120	44	40	40	24	UA	BP-1	Typical

Upright Column (UC) Section Properties

Mark :	UCA300x225x0075					
b_c (in)	h_c (in)	t_c (in)	w_c (in)	A_g (in^2)	A_n(in^2)	x_{bar} (in)
3.000	2.250	0.075	0.500	0.637	0.511	0.946
I_x (in^4)	S_x (in^3)	I_y (in^4)	S_y (in^3)	C_w (in^6)	J (in^4)	r_o (in)
0.937	0.511	0.387	0.297	0.514	0.00119	2.502
r_x (in) =	1.354	r_y (in) =	0.870			

Upright Frame Horizontal (UH) / Diagonal (UD) Brace Section Properties

Mark :	C275x1063x0062					
b_w (in)	h_w (in)	t_w (in)	w_w (in)	A_g (in^2)	x_{bar}(in)	x_o (in)
2.750	1.063	0.062	0.438	0.325	0.352	0.834
I_x (in^4)	S_x (in^3)	I_y (in^4)	S_y (in^3)	C_w (in^6)	J (in^4)	r_o (in)
0.360	0.262	0.050	0.070	0.093	0.00042	1.399
r_x (in) =	1.053	r_y (in) =	0.391			

Upright Frame Shelf Beam Section Properties

Mark :	B410x250x0066		
d (in)	b (in)	c_h (in)	c_w (in)
4.100	2.500	1.625	0.875
t (in)	I_x (in^4)	S_x (in^3)	r_x (in)
0.066	1.716	0.792	1.441
A_g (in^2)	I_y (in^4)	S_y (in^3)	r_y (in)
0.827	0.761	0.557	0.960
x_{bar} (in) =	1.133	y_{bar} (in) =	1.932

Upright Post Base Plate Design:

Check for Axial Compression, P_{max} :

Base Plate Type =	BP-1	
Base Plate Depth =	5.00	in
Base Plate Width =	3.75	in
Default Plate Thickness =	0.2500	in
Base Plater Area, A_{BP} =	18.75	in^2
Upright Width, b_c =	3.000	in
Upright Depth, h_c =	2.250	in
Upright Post Brg Area, A_{Post} =	6.75	in^2
A_{reqd} / A_{Post} =	0.658	< 1.0 O.K.
P_{max} (per RISA) =	10888.013	lbs <--- Using Strength Design Load Combinations per RMI, sect. 2.2
T_{max} (per RISA) =	1278.251	lbs
Design Bearing Pressure, f_p =	580.69	psi
Required Bearing Area, $A_{reqd} = P_{max}/(0.7f'_c)$ =	4.4441	in^2

Upright Frame Steel Material:

ASTM A570, Grade 55

Fy =	55,000	psi
Fu =	70,000	psi
E =	29,000	ksi

<---- Base Plate Size and Thickness is acceptable for Axial Compression

Check for Axial Tension, T_{max} :

Tension force per bolt, f_t =	1278.25	lbs
Bolt CL dist to face of Post =	0.25	in
Effective Plate Width, b_{eff} =	3.75	in

Min. Thickness required, t_{pl} = 0.08810 in <--- Base Plate Thickness is Adequate

Shelf Beam End Connections (2 Lug Connector)

ASTM- A570, GR. 35 (F_y= 55 ksi, F_u= 70 ksi) Ω_v = 1.6 Ω_b = 1.67

Beam End Connector Bending Capacity check:

λ_p = 0.54*SQRT(E/Fy) =	12.3997		λ_{min}, b/t =	4.6667	< λ_p
Connector PL Thickness, t =	0.1875	in	$A_{lug} = (t)(b_{lug\ h})$ =	0.16406	in^2
Net Lug width, b_{lug} =	0.6563	in	$A_{brg\ col} = (t_c)(b_{lug\ h})$ =	0.06563	in^2
Min. Beam Depth, H_{bm} =	4.100	in	d_{CL}= 4"+ $b_{lug\ h}$ - $b_{lug\ h}$/2 =	4.4375	in
Net Lug Height, $b_{lug\ h}$ =	0.875	in			
Uniform beam load, w =	206.3	lb/ft	<--- (1/2 Max. Shelf Load) / (Rack Trib width)		

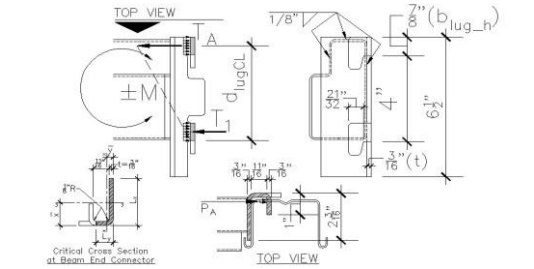

Beam End Section at 2 Lug Connector

Determine max. T_A for connector lug (shear or bearing on column):

$V_a = V_n/\Omega_v = 0.6A_{lug}F_y/\Omega_v$ =	3384	lbs <--- Shear at Lug tab
$P_a = (A_{brg\ col})(2.1)F_y/\Omega_b$ =	4539	lbs <--- Lug Brg on Column Wall
T_A = min(V_a, P_a) =	3384	lbs
$M_A = (T_A)(d_{CL})+(T_1)(b_{lug\ h}/2) + M_{x\ pl\ all}$ =	19940	in-lbs
M_{lat} (per RISA, Joint J47) =	4376.016	in-lbs
$M_{gravity} = (1/2)[wL^2/12]$ =	6600	in-lbs
Total Connector Moment, M = M_{lat}+M_{grav} =	10976	in-lbs
M / M_A =	0.550	< 1.0 O.K.

Connector Plate Bending Capacity:

$A_{g\ pl}$ =	0.5215 in^2		
$r_o = r_i + t$ =	0.3125 in	L_x (long leg) =	2.1875 in
r_i =	0.1250 in	L_y(short leg) =	0.8750 in
x_{bar} =	0.8907 in	y_{bar} =	0.2121 in
I_x =	0.0199 in^4	$S_x = I_x / y_{bar}$ =	0.0938 in^3

$M_{x\ pl\ all}$ = (bent about Long Leg - (x-axis)) = $(1.5)(F_y)(S_x)/\Omega_b$ = 4632 in-lbs (AISC Eq. F10-1)

Shear Capacity check:

$V_a = V_n/\Omega_v = 0.6A_{lug}F_y/\Omega_v$ =	3384	lbs / lug
V (Impact) =	825	lbs - 25% Max. Shelf Load at beam end (RMI section 2.3)
V (per RISA, member SB42) =	1185.684	lbs - total beam end shear
V / V_A =	0.297	< 1.0 O.K.

Beam to Connector Weld check:

Shelf Beam Wall thickness, t_{beam} =	0.075	in
Shelf Beam Depth, $H_{bm} = H_{weld}$ =	4.100	in
Top Beam Flange width, B_{weld} =	1.625	in
Beam Haunch depth, Y_{weld} =	1.500	in
Corner offset distance, d_{corner} =	0.200	in
Vertical Weld length, L_1 =	3.700	in
Top Weld length, L_2 =	1.225	in
Vertical Weld length, L_3 =	1.175	in
Total Length of Weld, L_w =	6.100	in
Distance to Y-axis Centroid, =	0.47618	in
Distance to X-axis Centroid, =	2.70487	in
Moment Interia of Weld - X-axis, $I_{x\ weld}$ =	0.71829	in^4
Moment Interia of Weld - Y-axis, $I_{y\ weld}$ =	0.23701	in^4
Polar Moment of Inertia, $I_p = I_x + I_y$ =	0.95530	in^4
$F_{w\ all}$= $[(0.6)F_{exx}/\Omega_{weld}]*(1+0.5\sin^{1.5}(\theta))$ =	31500	psi
$M_{all} = (F_{w\ all})(I_p)/c$ =	12013	in-lbs
Total Connector Moment, M = M_{lat}+M_{grav} =	10976	in-lbs
M / M_{all} =	0.914	< 1.0 O.K.
Interior Bend Radius =	0.125	in
Fillet Weld leg width =	0.125	in
Weld throat width, w_w =	0.08839	in
Ω_{weld} =	2.00	
F_{exx} =	70	ksi
	2.73	in <--- distance to bottom of L_3

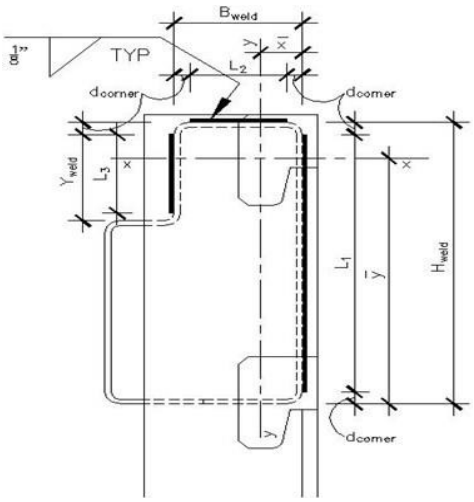

JOHNSTON BURKHOLDER ASSOCIATES
consulting structural engineers
930 CENTRAL · KANSAS CITY, MO 64105
816.421.4200 · WWW.JBAENGR.COM

PROJECT NO: 2401802403		SHEET NO: 55	OF: 66
PROJECT NAME: #02403 - Puyallup, WA			
MADE BY: KSH		DATE: 04/19/24	
CHECKED BY:		DATE:	

Storage Rack - Seismic Design — Rack D — 24-120 075A

IBC 2021 / ASCE 7-16 / 2016 RMI (ANSI/MH16.3-16)

Seismic Importance Factor (I_p) =	1.0	<--- No Public Access Allowed (Typ. at Back Stockroom / Grocery Storage Areas)
Supported on Elevated Floor (Y/N):	No	
Max. Weight per level (2 Pallets / shelf) =	1035 lbs/shelf	
Weight of Unit =	250 lbs	<--- Shipping weight per Manuf.
Rack Trib width (CL-to-CL of frames) =	96 in	Total Shelf Load
h_9 =	0 in	0 lbs
h_8 =	0 in	0 lbs
h_7 =	0 in	0 lbs
h_6 =	0 in	0 lbs
h_5 =	0 in	0 lbs
h_4 =	36 in	1035 lbs
h_3 =	36 in	1035 lbs
h_2 =	36 in	1035 lbs
h_1 =	12 in	1035 lbs
Total Shelf Height, H_t =	120 in	
Unit Height, H_u =	120 in	
Unit Base Depth, D =	24 in	

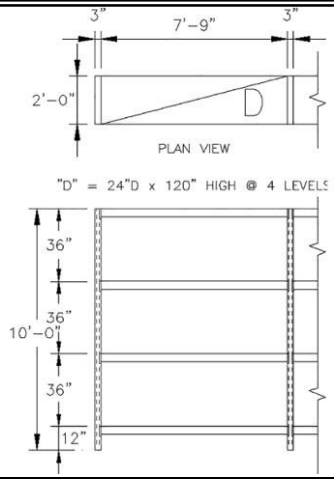

Note: Per ANSI MH16.1, Section 6.3, effective lengths may be determined by rational methods consistent with AISI or AISC. AISC Design by Second-Order Analysis, Section C2.2a is used. Notional loads are applied to gravity load cases and K=1.0 is used since the ratio of second-order drift to first-order drift (P-δ) / (P-Δ) < 1.1.

Overturning Stability (Load cases are per ASCE 7 sect. 15.5.3.6):

Load Case 1 [RMI sect. 2.6.8(1) - PL=0.67(PL)]
[RMI sect 2.6.2, PL_{RF} = 1.0]

Seismic $(C_s)(I_p)$ = 0.210 W_s (Braced)
0.076 W_s (Down Aisle)

$W_s = (0.67)(PL_{RF})((0.67)PL)+DL$ = 2108.4 lbs

Base Shear, $V = C_s I_p W_s$ = 443.3 lbs (Braced)
160.8 lbs (Down Aisle)

Horizontal forces / level, $F_x = C_{vx}V$ (RMI sect 2.6.6)
(Service Loads, E = 0.7)

F_9 =	0.0 lbs	@ 0 in (CM)
F_8 =	0.0 lbs	@ 0 in (CM)
F_7 =	0.0 lbs	@ 0 in (CM)
F_6 =	0.0 lbs	@ 0 in (CM)
F_5 =	0.0 lbs	@ 0 in (CM)
F_4 =	122.9 lbs	@ 144 in (CM)
F_3 =	87.0 lbs	@ 102 in (CM)
F_2 =	56.3 lbs	@ 66 in (CM)
F_1 =	25.6 lbs	@ 30 in (CM)
F_u =	18.5 lbs	@ 60 in (CM)

Note: (CM) = Product Center of Mass typically 20 inches above the top of shelf at each level.

Calculate Overturning Moment (Service), $M_{OT} = \Sigma f_i h_i$
M_{OT} = 32167 in-lbs
Calculate Resisting Moment (Service), M_{RST}
M_{RST} = 36286 in-lbs
Factor of Safety, $FOS_{OT} = M_{RST}/M_{OT}$ = 1.128
NO UPLIFT - ANCHORS REQUIRED

Load Case 2 [RMI sect. 2.6.8(2), PL=1.0(PL)]
[RMI 2.6.2, PL_{RF}=1.0]

Seismic $(C_s)(I_p)$ = 0.210 W_s (Braced)
0.076 W_s (Down Aisle)

$W_s = (0.67)(PL_{RF})((1)PL)+DL$ = 943.5 lbs

Base Shear, $V = C_s I_p W_s$ = 198.4 lbs (Braced)
72.0 lbs (Down Aisle)

Horizontal forces / level, $F_x = C_{vx}V$ (RMI sect 2.6.6)
(Service Loads)

F_9 =	0.0 lbs	
F_8 =	0.0 lbs	
F_7 =	0.0 lbs	
F_6 =	0.0 lbs	
F_5 =	0.0 lbs	
F_4 =	125.8 lbs	@ 140 in (CM)
F_3 =	0.0 lbs	
F_2 =	0.0 lbs	
F_1 =	0.0 lbs	
F_u =	13.0 lbs	@ 60 in (CM)

Calculate Overturning Moment (Service), $M_{OT} = \Sigma f_i h_i$
M_{OT} = 18397 in-lbs
Calculate Resisting Moment (Service), M_{RST}
M_{RST} = 15420 in-lbs
Factor of Safety, $FOS_{OT} = M_{RST}/M_{OT}$ = 0.838
UPLIFT - ANCHORS REQUIRED

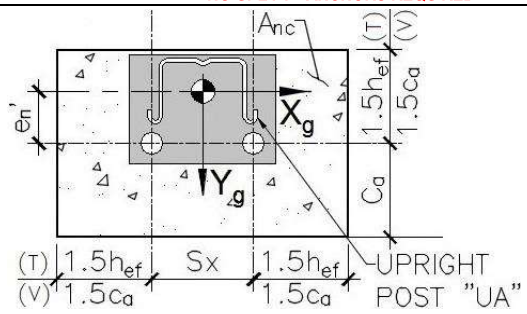

Anchor Design (using "Cracked Concrete" Properties)

Upright Post Type = UA
Try: 1/2" DIA Hilti Kwik Bolt-TZ2 (CS) Anchor - 2 1/2" embed.
Embedment (h_{nom}) = 2.5 in
f_c' = 3500 psi
e_n' = 1.875 in <-- Eccen. of Anchor
h_{ef} = 2 in $1.5(h_{ef})$ = 3.000 in
Conc. thickness, t = 4 in $1.5(C_a)$ = 15.000 in
# of Anchors, n = 1
Sx = 0.00 in
Sy = 0.00 in
A_{se} = 0.099 in^2

Base Reactions:

	LC #1		LC #2	
R_h =	155 lbs		69 lbs	
R_v =	0 lbs		124 lbs	
Overturning FOS =	1.128	< 1.5 ABs Reqd	0.838	< 1.5 ABs Reqd
Sliding Restraint, R_{RST}/FOS =	599lbs / 3.858	>= 1.5 OK	310lbs / 4.459	>= 1.5 OK
Reactions (Factored Loads):	LC #1		LC #2	
Base Shear (R_{uh}) =	443 lbs		198 lbs	
Net Uplift (R_{uv}) =	0 lbs		1720 lbs	
Overturning + Gravity (P_u) =	5136 lbs		2332 lbs	
Tension Allowables				
Steel Strength, ϕN_{sa} =	7306 lbs	<--ACI 318-14 Eq 17.4.1.2		
Concrete Breakout, $(0.75)\phi N_{cbg}$ =	1713 lbs	<--ACI 318-14 Eq 17.4.2.1b		
Pullout Strength, $(0.75)\phi N_{pn}$ =	NA	<--ACI 318-14 Eq 17.4.3.1		
Factored Tension Load, (N_u) =	0 lbs	(LC #1)	1720 lbs	(LC #2)
max tension stress ratio (TSR) =	0.000	OK (LC#1)	1.004	OK (LC#2)
Shear Allowables				
Steel Strength, ϕV_{sa} =	3321 lbs	<--ACI 318-14 Eq 17.5.1.2c		
Concrete breakout (Yg), ϕV_{cbg} =	5702 lbs	<--ACI 318-14 Eq 17.5.2.1b		
Concrete breakout (Xg), ϕV_{cbg} =	5069 lbs	<--ACI 318-14 Eq 17.5.2.1b		
Concrete pryout, ϕV_{cpg} =	2460 lbs	<--ACI 318-14 Eq 17.5.3.1b		
	LC #1		LC #2	
Factored Shear Load (V_u) : Braced =	443 lbs		198 lbs	
Down Aisle =	161 lbs		72 lbs	
Max shear stress ratio (VSR) : Braced =	0.180	OK	0.081	OK
Down Aisle =	0.065	OK	0.029	OK
Braced (TSR+VSR <= 1.2) =	1.085	<= 1.2 OK - LC #2 Controls		
Down Aisle (VSR <= 1.0) =	0.065	OK - LC #1 Controls		

USE: (1) 1/2" DIA Hilti Kwik Bolt-TZ2 (CS) Anchor - 2 1/2" embed. ICC REPORT #ESR-4266

JOHNSTON BURKHOLDER ASSOCIATES
consulting structural engineers
930 CENTRAL · KANSAS CITY, MO 64105
816.421.4200 · WWW.JBAENGR.COM

PROJECT NO: 2401802403	SHEET NO: 56	OF: 66
PROJECT NAME: #02403 - Puyallup, WA		
MADE BY: KSH	DATE: 04/19/24	
CHECKED BY:	DATE:	

Storage Rack - Seismic Design Rack D 24-120 075A

IBC 2021 / ASCE 7-16 / 2016 RMI (ANSI/MH16.3-16)

Punching Shear Check:
(Design per ACI 318-14 section 14.5.5)

Max. Factored Vertical Load (P_u) =	5136	lbs
Slab Concrete f'c =	3500	psi
Slab thickness (t) =	4	in.
Rack Post X-X =	5.00	in.
Rack Post Y-Y =	3.75	in.
b_o =	33.50	in.
β =	1.33	
V_n =	26425 lbs	Eq. (22-10)
V_n max =	21087 lbs	Eq. (22-10)
ϕV_n =	12652 lbs	
$V_u/\phi V_n$ =	0.406 < 1.0 O.K.	

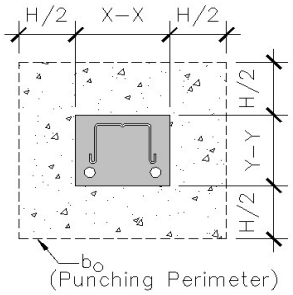

Max Vertical Load (ASD) - RMI, sect 2.1 - LC#4:
P = (1+0.11Sds)DL+(3/4)[(1+0.14Sds)PL+(0.7)EL]

S_{DS} =	0.841	(Ip=1)
DL = (Frame Wt/2) =	125	lbs
PL = Σ(Shelf Load h_1 - h_9)/2 =	2070	lbs
EL = $M_{OT, LC\#1}$ / ((0.7)(D)) =	2858	lbs
P =	2877 lbs <--- At Each Post	

Max Vertical Load (LRFD) - RMI, sect 2.2 - LC#5:
P = (1.2+0.2Sds)DL + (0.85+0.2Sds)PL + EL
P_u = 5136 lbs <--- At Each Post

Slab tension based on Soil bearing area check:

Allowable soil bearing =	1500	psf
Max. Service Vertical Load (P) =	2877	lbs
Area reqd. for bearing (A_{reqd}) =	1.92	ft^2
"b" distance =	16.62	in
Slab thickness (t) =	4.00	in
S = (1")$(t)^2$/6 =	2.67	in^3/in
ϕM_{nt} (tension allowable) = f_t*7.5*[$(f'_c)^{1/2}$]*S =	709.93	in-lb/in
Factored uniform bearing, w_u = P_u / A_{reqd} =	18.60	lb/in/in
M_u = $wL^2/3$ = $(w_u)[(b-\min(X-X,Y-Y))/2)^2]$ / 3 =	256.64	in-lb/in - Defl. End M1 = 129 in-lb/in
$M_u/\phi M_{nt}$ =	0.362	< 1.0 O.K.

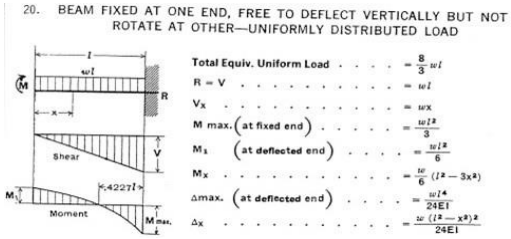

Rack FOS Overturning with Resistance from Effective Weight of Slab on Grade:

Width of Single Rack =	24	in
Slab thickness (t) =	4.0	in
Modulus of Rupture, f_r = 7.5*SQRT(f'c) =	443.7	psi
Concrete Slab Section Modulus, S = b$(t)^2$/6 =	32.0	in^3/ft
Allowable Concrete Slab Bending Moment, M_{all}/FS = S*f_r/1.5 =	788.8	ft*lbs/ft
Effective Cantilever Span Length (l_c) at M_{all} =	5.6	ft
Total Length of Slab (l_c + Width of Single Rack) =	7.6	ft
Trib. Width of Slab = Trib width of Rack =	8.0	ft
Weight of Concrete Slab at Rack (P_{conc}) =	3046.9	lbs
Resisting Moment - Concrete Slab at Rack, $M_{RST(slab)}$ = P_{conc} * l_c/2 =	139251	in*lbs
Load Combination #1: M_{OT} =	32167	in*lbs
$M_{RST(Rack)}$ + $M_{RST(slab)}$ =	175536	in*lbs
Total Overturning FOS =	5.457	OK
Load Combination #2: M_{OT} =	18397	in*lbs
$M_{RST(Rack)}$ + $M_{RST(slab)}$ =	154671	in*lbs
Total Overturning FOS =	8.407	OK

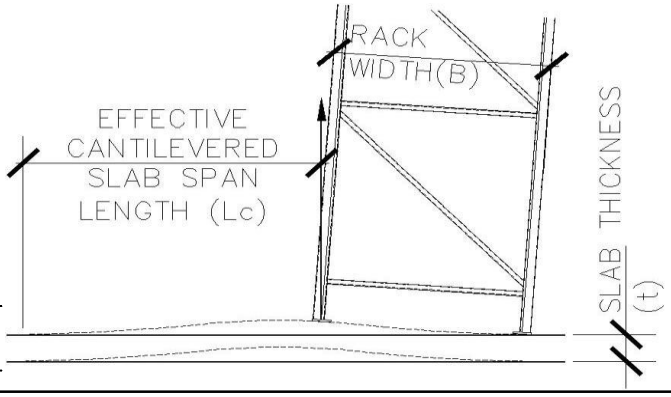

Upright Frame Member/Connection Design:

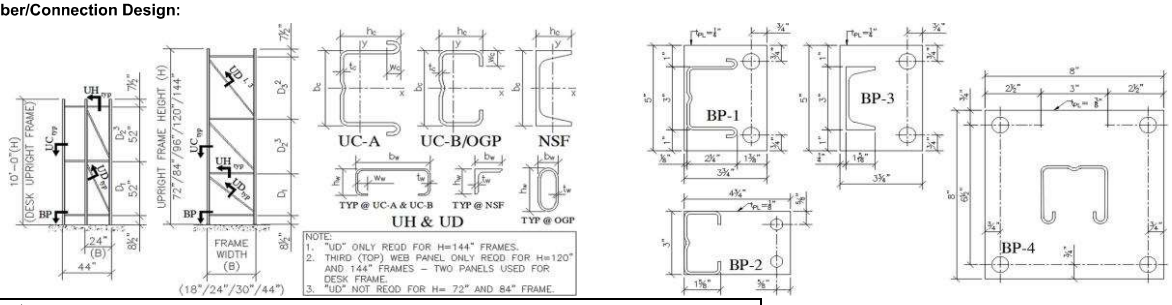

Upright Frame Geometry

Height, H (in)	Width, B (in)	Panel - D_1, in	Panel - D_2, in	Panel - D_3, in	Frame Post Type	Base PL Type	Frame Type
120	24	40	40	24	UA	BP-1	Typical

Upright Column (UC) Section Properties

Mark :	UCA300x225x0075					
b_c (in)	h_c (in)	t_c (in)	w_c (in)	A_g (in^2)	A_n(in^2)	x_{bar} (in)
3.000	2.250	0.075	0.500	0.637	0.511	0.946
I_x (in^4)	S_x (in^3)	I_y (in^4)	S_y (in^3)	C_w (in^6)	J (in^4)	r_o (in)
0.937	0.511	0.387	0.297	0.514	0.00119	2.502
r_x (in) =	1.354	r_y (in) =	0.870			

Upright Frame Horizontal (UH) / Diagonal (UD) Brace Section Properties

Mark :	C275x1063x0062					
b_w (in)	h_w (in)	t_w (in)	w_w (in)	A_g (in^2)	x_{bar}(in)	x_o (in)
2.750	1.063	0.062	0.438	0.325	0.352	0.834
I_x (in^4)	S_x (in^3)	I_y (in^4)	S_y (in^3)	C_w (in^6)	J (in^4)	r_o (in)
0.360	0.262	0.050	0.070	0.093	0.00042	1.399
r_x (in) =	1.053	r_y (in) =	0.391			

Upright Frame Shelf Beam Section Properties

Mark :	B410x250x0066		
d (in)	b (in)	c_h (in)	c_w (in)
4.100	2.500	1.625	0.875
t (in)	I_x (in^4)	S_x (in^3)	r_x (in)
0.066	1.716	0.792	1.441
A_g (in^2)	I_y (in^4)	S_y (in^3)	r_y (in)
0.827	0.761	0.557	0.960
x_{bar} (in) =	1.133	y_{bar} (in) =	1.932

Upright Post Base Plate Design:

Check for Axial Compression, P_{max} :

Base Plate Type =	BP-1	
Base Plate Depth =	5.00	in
Base Plate Width =	3.75	in
Default Plate Thickness =	0.2500	in
Base Plater Area, A_{BP} =	18.75	in^2
Upright Width, b_c =	3.000	in
Upright Depth, h_c =	2.250	in
Upright Post Brg Area, A_{Post} =	6.75	in^2
A_{reqd} / A_{Post} =	0.294	< 1.0 O.K.
P_{max} (per RISA) =	4853.816	lbs <--- Using Strength Design Load Combinations per RMI, sect. 2.2
T_{max} (per RISA) =	1104.443	lbs
Design Bearing Pressure, f_p =	258.87	psi
Required Bearing Area, $A_{reqd} = P_{max}/(0.7f'_c)$ =	1.9811	in^2

Upright Frame Steel Material:

ASTM A570, Grade 55

Fy =	55,000	psi
Fu =	70,000	psi
E =	29,000	ksi

<---- Base Plate Size and Thickness is acceptable for Axial Compression

Check for Axial Tension, T_{max} :

Tension force per bolt, f_t =	1104.44	lbs
Bolt CL dist to face of Post =	0.25	in
Effective Plate Width, b_{eff} =	3.75	in

Min. Thickness required, t_{pl} = 0.08190 in <--- Base Plate Thickness is Adequate

Shelf Beam End Connections (2 Lug Connector)

ASTM- A570, GR. 35 (F_y= 55 ksi, F_u= 70 ksi) Ω_v = 1.6 Ω_b = 1.67

Beam End Connector Bending Capacity check:

λ_p = 0.54*SQRT(E/Fy) =	12.3997		λ_{min}, b/t =	4.6667	< λ_p
Connector PL Thickness, t =	0.1875	in	$A_{lug} = (t)(b_{lug\ h})$ =	0.16406	in^2
Net Lug width, b_{lug} =	0.6563	in	$A_{brg\ col} = (t_c)(b_{lug\ h})$ =	0.06563	in^2
Min. Beam Depth, H_{bm} =	4.100	in	d_{CL}= 4"+ $b_{lug\ h}$ - $b_{lug\ h}$/2 =	4.4375	in
Net Lug Height, $b_{lug\ h}$ =	0.875	in			
Uniform beam load, w =	64.7	lb/ft	<--- (1/2 Max. Shelf Load) / (Rack Trib width)		

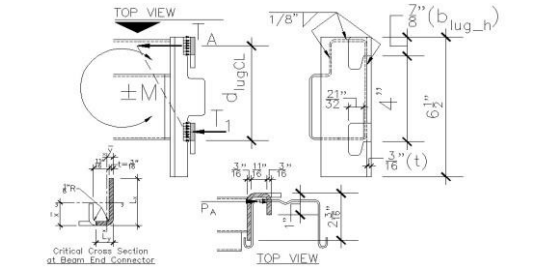

Beam End Section at 2 Lug Connector

Determine max. T_A for connector lug (shear or bearing on column):

$V_a = V_n/\Omega_v = 0.6A_{lug}F_y/\Omega_v$ =	3384	lbs <--- Shear at Lug tab
$P_a = (A_{brg\ col})(2.1)F_y/\Omega_b$ =	4539	lbs <--- Lug Brg on Column Wall
T_A = min(V_a, P_a) =	3384	lbs
$M_A = (T_A)(d_{CL})+(T_1)(b_{lug\ h}/2) + M_{x\ pl\ all}$ =	19940	in-lbs
M_{lat} (per RISA, Joint J47) =	13817.408	in-lbs
$M_{gravity} = (1/2)[wL^2/12]$ =	2070	in-lbs
Total Connector Moment, M = M_{lat}+M_{grav} =	15887	in-lbs
M / M_A =	0.797	< 1.0 O.K.

Connector Plate Bending Capacity:

$A_{g\ pl}$ =	0.5215	in^2	
$r_o = r_i + t$ =	0.3125	in	L_x (long leg) = 2.1875 in
r_i =	0.1250	in	L_y(short leg) = 0.8750 in
x_{bar} =	0.8907	in	y_{bar} = 0.2121 in
I_x =	0.0199	in^4	$S_x = I_x / y_{bar}$ = 0.0938 in^3

$M_{x\ pl\ all}$ = (bent about Long Leg - (x-axis)) = $(1.5)(F_y)(S_x)/\Omega_b$ = 4632 in-lbs (AISC Eq. F10-1)

Shear Capacity check:

$V_a = V_n/\Omega_v = 0.6A_{lug}F_y/\Omega_v$ =	3384	lbs / lug
V (Impact) =	258.75	lbs - 25% Max. Shelf Load at beam end (RMI section 2.3)
V (per RISA, member SB42) =	956.634	lbs - total beam end shear
V / V_A =	0.180	< 1.0 O.K.

Beam to Connector Weld check:

Shelf Beam Wall thickness, t_{beam} =	0.075	in
Shelf Beam Depth, $H_{bm} = H_{weld}$ =	4.100	in
Top Beam Flange width, B_{weld} =	1.625	in
Beam Haunch depth, Y_{weld} =	1.500	in
Corner offset distance, d_{corner} =	0.200	in
Vertical Weld length, L_1 =	3.700	in
Top Weld length, L_2 =	1.225	in
Vertical Weld length, L_3 =	1.175	in
Total Length of Weld, L_w =	6.100	in
Distance to Y-axis Centroid, =	0.47618	in
Distance to X-axis Centroid, =	2.70487	in
Moment Interia of Weld - X-axis, $I_{x\ weld}$ =	0.71829	in^4
Moment Interia of Weld - Y-axis, $I_{y\ weld}$ =	0.23701	in^4
Polar Moment of Inertia, $I_p = I_x + I_y$ =	0.95530	in^4
$F_{w\ all}$= $[(0.6)F_{exx}/\Omega_{weld}]*(1+0.5\sin^{1.5}(\Theta))$ =	31500	psi
$M_{all} = (F_{w\ all})(I_p)/c$ =	12013	in-lbs
Total Connector Moment, M = M_{lat}+M_{grav} =	15887	in-lbs
M / M_{all} =	1.322	N.G.
Interior Bend Radius =	0.125	in
Fillet Weld leg width =	0.125	in
Weld throat width, w_w =	0.08839	in
Ω_{weld} =	2.00	
F_{exx} =	70	ksi
	2.73	in <--- distance to bottom of L_3

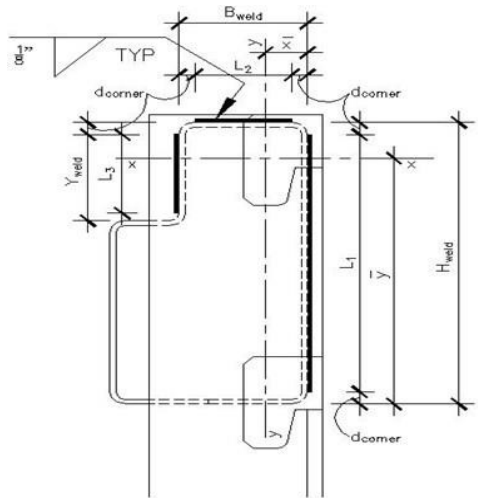

JOHNSTON BURKHOLDER ASSOCIATES
consulting structural engineers
930 CENTRAL · KANSAS CITY, MO 64105
816.421.4200 · WWW.JBAENGR.COM

PROJECT NO: 2401802403		SHEET NO: 58	OF: 66
PROJECT NAME: #02403 - Puyallup, WA			
MADE BY: KSH		DATE: 04/19/24	
CHECKED BY:		DATE:	

Storage Rack - Seismic Design — Rack T 36 — 36-60 075B

IBC 2021 / ASCE 7-16 / 2016 RMI (ANSI/MH16.3-16)

Seismic Importance Factor (I_p) =	1.5	<--- Public Access Allowed (Typ. at Sales Floor / Garden Center Areas)
Supported on Elevated Floor (Y/N):	No	
Max. Weight per level (2 Pallets / shelf) =	600 lbs/shelf	
Weight of Unit =	250 lbs	<--- Shipping weight per Manuf.
Rack Trib width (CL-to-CL of frames) =	96 in	Total Shelf Load
h_9 =	0 in	0 lbs
h_8 =	0 in	0 lbs
h_7 =	0 in	0 lbs
h_6 =	0 in	0 lbs
h_5 =	0 in	0 lbs
h_4 =	0 in	0 lbs
h_3 =	26 in	600 lbs
h_2 =	26 in	600 lbs
h_1 =	8 in	600 lbs
Total Shelf Height, H_t =	60 in	
Unit Height, H_u =	60 in	
Unit Base Depth, D =	36 in	

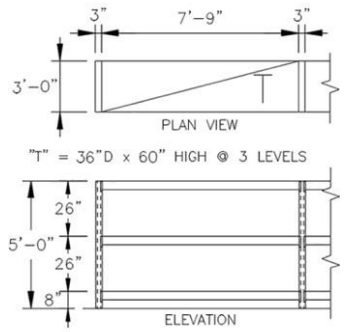

Note: Per ANSI MH16.1, Section 6.3, effective lengths may be determined by rational methods consistent with AISI or AISC. AISC Design by Second-Order Analysis, Section C2.2a is used. Notional loads are applied to gravity load cases and K=1.0 is used since the ratio of second-order drift to first-order drift (P-δ) / (P-Δ) < 1.1.

Overturning Stability (Load cases are per ASCE 7 sect. 15.5.3.6):

Load Case 1 [RMI sect. 2.6.8(1) - PL=0.67(PL)]
[RMI sect 2.6.2, PL_{RF} = 1.0]

Seismic $(C_s)(I_p)$ = 0.315 W_s (Braced)
0.108 W_s (Down Aisle)

$W_s = (0.67)(PL_{RF})((0.67)PL)+DL$ = 1058.0 lbs

Base Shear, $V = C_s I_p W_s$ = 333.7 lbs (Braced)
114.6 lbs (Down Aisle)

Horizontal forces / level, $F_x = C_{vx}V$ (RMI sect 2.6.6)
(Service Loads, E = 0.7)

F_9 =	0.0 lbs	@ 0 in (CM)
F_8 =	0.0 lbs	@ 0 in (CM)
F_7 =	0.0 lbs	@ 0 in (CM)
F_6 =	0.0 lbs	@ 0 in (CM)
F_5 =	0.0 lbs	@ 0 in (CM)
F_4 =	0.0 lbs	@ 0 in (CM)
F_3 =	112.1 lbs	@ 80 in (CM)
F_2 =	65.9 lbs	@ 47 in (CM)
F_1 =	29.4 lbs	@ 21 in (CM)
F_u =	26.1 lbs	@ 30 in (CM)

Note: (CM) = Product Center of Mass typically 20 inches above the top of shelf at each level.

Calculate Overturning Moment (Service), $M_{OT} = \Sigma f_i h_i$
M_{OT} = 13468 in-lbs
Calculate Resisting Moment (Service), M_{RST}
M_{RST} = 26208 in-lbs
Factor of Safety, $FOS_{OT} = M_{RST}/M_{OT}$ = 1.946

NO UPLIFT - NO ANCHORS REQUIRED

Load Case 2 [RMI sect. 2.6.8(2), PL=1.0(PL)]
[RMI 2.6.2, PL_{RF}=1.0]

Seismic $(C_s)(I_p)$ = 0.315 W_s (Braced)
0.108 W_s (Down Aisle)

$W_s = (0.67)(PL_{RF})((1)PL)+DL$ = 652.0 lbs

Base Shear, $V = C_s I_p W_s$ = 205.6 lbs (Braced)
70.6 lbs (Down Aisle)

Horizontal forces / level, $F_x = C_{vx}V$ (RMI sect 2.6.6)
(Service Loads)

F_9 =	0.0 lbs	
F_8 =	0.0 lbs	
F_7 =	0.0 lbs	
F_6 =	0.0 lbs	
F_5 =	0.0 lbs	
F_4 =	0.0 lbs	
F_3 =	124.5 lbs	@ 80 in (CM)
F_2 =	0.0 lbs	
F_1 =	0.0 lbs	
F_u =	19.5 lbs	@ 30 in (CM)

Calculate Overturning Moment (Service), $M_{OT} = \Sigma f_i h_i$
M_{OT} = 10542 in-lbs
Calculate Resisting Moment (Service), M_{RST}
M_{RST} = 15300 in-lbs
Factor of Safety, $FOS_{OT} = M_{RST}/M_{OT}$ = 1.451

NO UPLIFT - ANCHORS REQUIRED

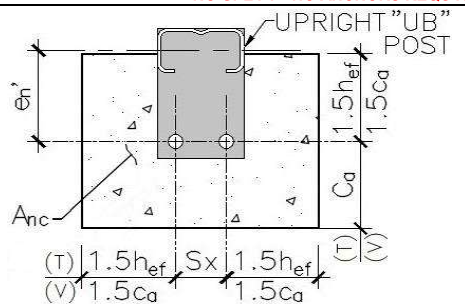

Anchor Design (using "Cracked Concrete" Properties)

Upright Post Type =	UB	
Try:	3/8" DIA Hilti Kwik Bolt-TZ2 (CS) Anchor - 2 1/2" embed.	
Embedment (h_{nom}) =	2.5 in	
f_c' =	3500 psi	
e_h' =	3.3125 in	<-- Eccen. of Anchor
h_{ef} =	2 in	$1.5(h_{ef})$ = 3.000 in
Conc. thickness, t =	4 in	$1.5(C_a)$ = 5.250 in
# of Anchors, n =	1	
Sx =	0.00 in	
Sy =	0.00 in	
A_{se} =	0.051 in^2	

Base Reactions:

	LC #1		LC #2	
R_h =	117 lbs		72 lbs	
R_v =	0 lbs		0 lbs	
Overturning FOS =	1.946	>= 1.5	1.451	< 1.5 ABs Reqd
Sliding Restraint, R_{RST}/FOS =	226lbs / 1.933 >= 1.5 OK		155lbs / 2.15 >= 1.5 OK	
Reactions (Factored Loads):	LC #1		LC #2	
Base Shear (R_{uh}) =	334 lbs		206 lbs	
Net Uplift (R_{uv}) =	0 lbs		0 lbs	
Overturning + Gravity (P_u) =	1885 lbs		1101 lbs	
Tension Allowables				
Steel Strength, ϕN_{sa} =	4219 lbs	<--ACI 318-14 Eq 17.4.1.2		
Concrete Breakout, $(0.75)\phi N_{cbg}$ =	1713 lbs	<--ACI 318-14 Eq 17.4.2.1b		
Pullout Strength, $(0.75)\phi N_{pn}$ =	NA	<--ACI 318-14 Eq 17.4.3.1		
Factored Tension Load, (N_u) =	0 lbs	(LC #1)	0 lbs	(LC #2)
max tension stress ratio (TSR) =	0.000	OK (LC#1)	0.000	OK (LC#2)
Shear Allowables				
Steel Strength, ϕV_{sa} =	2031 lbs	<--ACI 318-14 Eq 17.5.1.2c		
Concrete breakout (Yg), ϕV_{cbg} =	1238 lbs	<--ACI 318-14 Eq 17.5.2.1b		
Concrete breakout (Xg), ϕV_{cbg} =	759 lbs	<--ACI 318-14 Eq 17.5.2.1b		
Concrete pryout, ϕV_{cpg} =	2460 lbs	<--ACI 318-14 Eq 17.5.3.1b		
	LC #1		LC #2	
Factored Shear Load (V_u) : Braced =	334 lbs		206 lbs	
Down Aisle =	115 lbs		71 lbs	
Max shear stress ratio (VSR) : Braced =	0.270	OK	0.166	OK
Down Aisle =	0.151	OK	0.093	OK
Braced (TSR+VSR <= 1.2) =	0.270	<= 1.2 OK - LC #1 Controls		
Down Aisle (VSR <= 1.0) =	0.151	OK - LC #1 Controls		

USE: (1) 3/8" DIA Hilti Kwik Bolt-TZ2 (CS) Anchor - 2 1/2" embed. ICC REPORT #ESR-4266

JOHNSTON BURKHOLDER ASSOCIATES
consulting structural engineers
930 CENTRAL · KANSAS CITY, MO 64105
816.421.4200 · WWW.JBAENGR.COM

PROJECT NO: 2401802403	SHEET NO: 59	OF: 66
PROJECT NAME: #02403 - Puyallup, WA		
MADE BY: KSH	DATE: 04/19/24	
CHECKED BY:	DATE:	

Storage Rack - Seismic Design Rack T 36 36-60 075B

IBC 2021 / ASCE 7-16 / 2016 RMI (ANSI/MH16.3-16)

Punching Shear Check:
(Design per ACI 318-14 section 14.5.5)

Max. Factored Vertical Load (P_u) =	1885	lbs
Slab Concrete f'c =	3500	psi
Slab thickness (t) =	4	in.
Rack Post X-X =	3.00	in.
Rack Post Y-Y =	4.75	in.
b_o =	31.50	in.
β =	1.58	
V_n =	22494	lbs Eq. (22-10)
V_n max =	19828	lbs Eq. (22-10)
ϕV_n =	11897	lbs
$V_u/\phi V_n$ =	0.158	< 1.0 O.K.

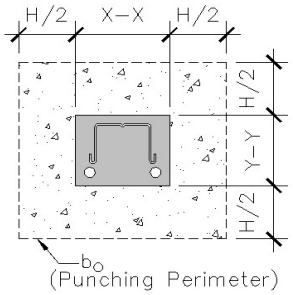

Max Vertical Load (ASD) - RMI, sect 2.1 - LC#4:
P = (1+0.11Sds)DL+(3/4)[(1+0.14Sds)PL+(0.7)EL]

S_{DS} =	0.841	(Ip=1.5)
DL = (Frame Wt/2) =	125	lbs
PL = Σ(Shelf Load h_1 - h_9)/2 =	900	lbs
EL = $M_{OT, LC\#1}$ / ((0.7)(D)) =	798	lbs
P =	1172	lbs <--- At Each Post

Max Vertical Load (LRFD) - RMI, sect 2.2 - LC#5:
P = (1.2+0.2Sds)DL + (0.85+0.2Sds)PL + EL
P_u = 1885 lbs <--- At Each Post

Slab tension based on Soil bearing area check:

Allowable soil bearing =	1500	psf
Max. Service Vertical Load (P) =	1172	lbs
Area reqd. for bearing (A_{reqd}) =	0.78	ft^2
"b" distance =	10.61	in
Slab thickness (t) =	4.00	in
S = (1")$(t)^2$/6 =	2.67	in^3/in
ϕM_{nt} (tension allowable) = f_t*7.5*[$(f'_c)^{1/2}$]*S =	709.93	in-lb/in
Factored uniform bearing, w_u = P_u / A_{reqd} =	16.75	lb/in/in
M_u = $wL^2/3$ = $(w_u)[(b-\min(X-X,Y-Y))/2)^2]$ / 3 =	80.79	in-lb/in - Defl. End M1 = 41 in-lb/in
$M_u/\phi M_{nt}$ =	0.114	< 1.0 O.K.

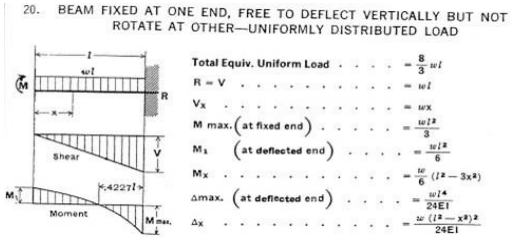

Rack FOS Overturning with Resistance from Effective Weight of Slab on Grade:

Width of Single Rack =	36	in
Slab thickness (t) =	4.0	in
Modulus of Rupture, f_r = 7.5*SQRT(f'c) =	443.7	psi
Concrete Slab Section Modulus, S = b$(t)^2$/6 =	32.0	in^3/ft
Allowable Concrete Slab Bending Moment, M_{all}/FS = S*f_r/1.5 =	788.8	ft*lbs/ft
Effective Cantilever Span Length (l_c) at M_{all} =	5.6	ft
Total Length of Slab (l_c + Width of Single Rack) =	8.6	ft
Trib. Width of Slab = Trib width of Rack =	8.0	ft
Weight of Concrete Slab at Rack (P_{conc}) =	3446.9	lbs
Resisting Moment - Concrete Slab at Rack, $M_{RST(slab)}$ = P_{conc} * l_c/2 =	178213	in*lbs
Load Combination #1: M_{OT} =	13468	in*lbs
$M_{RST(Rack)}$ + $M_{RST(slab)}$ =	204421	in*lbs
Total Overturning FOS =	15.178	OK
Load Combination #2: M_{OT} =	10542	in*lbs
$M_{RST(Rack)}$ + $M_{RST(slab)}$ =	193513	in*lbs
Total Overturning FOS =	18.356	OK

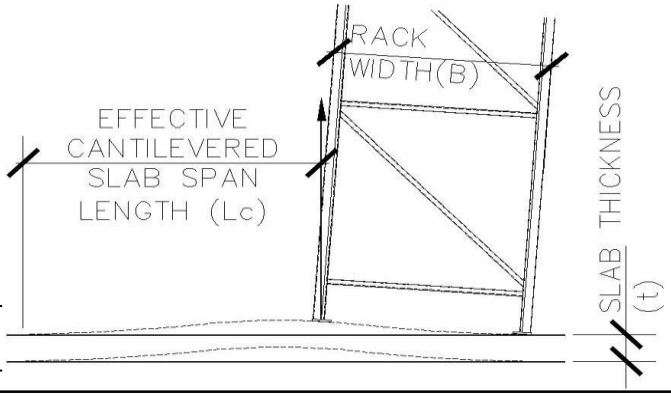

Upright Frame Member/Connection Design:

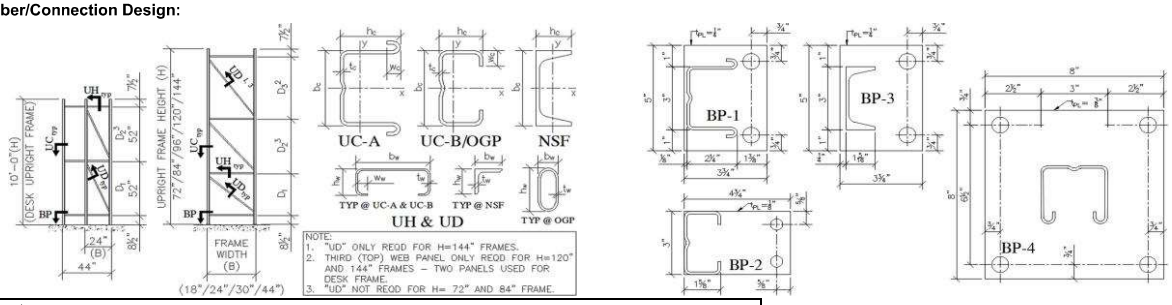

Upright Frame Geometry

Height, H (in)	Width, B (in)	Panel - D_1, in	Panel - D_2, in	Panel - D_3, in	Frame Post Type	Base PL Type	Frame Type
60	36	40	0	0	UB	BP-2	Typical

Upright Column (UC) Section Properties

Mark :	UCA300x225x0075					
b_c (in)	h_c (in)	t_c (in)	w_c (in)	A_g (in^2)	A_n(in^2)	x_{bar} (in)
3.000	2.250	0.075	0.500	0.637	0.511	0.946
I_x (in^4)	S_x (in^3)	I_y (in^4)	S_y (in^3)	C_w (in^6)	J (in^4)	r_o (in)
0.937	0.511	0.387	0.297	0.514	0.00119	2.502
r_x (in) =	1.354	r_y (in) =	0.870			

Upright Frame Horizontal (UH) / Diagonal (UD) Brace Section Properties

Mark :	C275x1063x0062					
b_w (in)	h_w (in)	t_w (in)	w_w (in)	A_g (in^2)	x_{bar}(in)	x_o (in)
2.750	1.063	0.062	0.438	0.325	0.352	0.834
I_x (in^4)	S_x (in^3)	I_y (in^4)	S_y (in^3)	C_w (in^6)	J (in^4)	r_o (in)
0.360	0.262	0.050	0.070	0.093	0.00042	1.399
r_x (in) =	1.053	r_y (in) =	0.391			

Upright Frame Shelf Beam Section Properties

Mark :	B410x250x0066		
d (in)	b (in)	c_h (in)	c_w (in)
4.100	2.500	1.625	0.875
t (in)	I_x (in^4)	S_x (in^3)	r_x (in)
0.066	1.716	0.792	1.441
A_g (in^2)	I_y (in^4)	S_y (in^3)	r_y (in)
0.827	0.761	0.557	0.960
x_{bar} (in) =	1.133	y_{bar} (in) =	1.932

JOHNSTON BURKHOLDER ASSOCIATES
consulting structural engineers
930 CENTRAL · KANSAS CITY, MO 64105
816.421.4200 · WWW.JBAENGR.COM

PROJECT NO:	SHEET NO:	OF:
2401802403	60	66
PROJECT NAME: #02403 - Puyallup, WA		
MADE BY: KSH	DATE: 04/19/24	
CHECKED BY:	DATE:	

Storage Rack - Seismic Design Rack T 36 36-60 075B

IBC 2021 / ASCE 7-16 / 2016 RMI (ANSI/MH16.3-16)

Upright Post Base Plate Design:

Check for Axial Compression, P_{max} :

Base Plate Type =	BP-2	
Base Plate Depth =	3.00	in
Base Plate Width =	4.75	in
Default Plate Thickness =	0.1250	in
Base Plater Area, A_{BP} =	14.25	in^2
Upright Width, b_c =	3.000	in
Upright Depth, h_c =	2.250	in
Upright Post Brg Area, A_{Post} =	6.75	in^2
A_{reqd} / A_{Post} =	0.396	< 1.0 O.K.
P_{max} (per RISA) =	6554	lbs <--- Using Strength Design Load Combinations per RMI, sect. 2.2
T_{max} (per RISA) =	2021	lbs
Design Bearing Pressure, f_p =	459.93	psi
Required Bearing Area, $A_{reqd} = P_{max}/(0.7f'_c)$ =	2.6751	in^2

Upright Frame Steel Material:

ASTM A570, Grade 55

Fy =	55,000	psi
Fu =	70,000	psi
E =	29,000	ksi

<---- Base Plate Size and Thickness is acceptable for Axial Compression

Check for Axial Tension, T_{max} :

Tension force per bolt, f_t =	2021.00	lbs
Bolt CL dist to face of Post =	0.63	in
Effective Plate Width, b_{eff} =	3.75	in

Min. Thickness required, t_{pl} = 0.17516 in <--- No Good - Increase Thickness

Shelf Beam End Connections (2 Lug Connector)

ASTM- A570, GR. 35 (F_y= 55 ksi, F_u= 70 ksi) Ω_v = 1.6 Ω_b = 1.67

Beam End Connector Bending Capacity check:

λ_p = 0.54*SQRT(E/Fy) =	12.3997		λ_{min}, b/t =	4.6667	< λ_p
Connector PL Thickness, t =	0.1875	in	A_{lug} = (t)($b_{lug\ h}$) =	0.16406	in^2
Net Lug width, b_{lug} =	0.6563	in	$A_{brg\ col}$ = (t_c)($b_{lug\ h}$) =	0.06563	in^2
Min. Beam Depth, H_{bm} =	4.100	in	d_{CL}= 4"+ $b_{lug\ h}$ - $b_{lug\ h}$/2 =	4.4375	in
Net Lug Height, $b_{lug\ h}$ =	0.875	in			
Uniform beam load, w =	37.5	lb/ft <--- (1/2 Max. Shelf Load) / (Rack Trib width)			

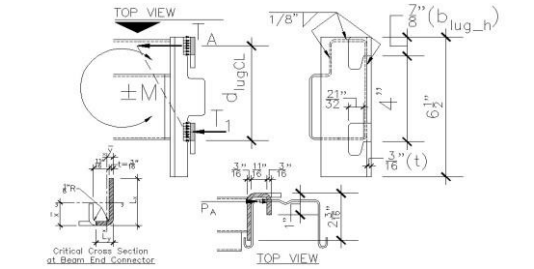

Beam End Section at 2 Lug Connector

Determine max. T_A for connector lug (shear or bearing on column):

$V_a = V_n/\Omega_v = 0.6A_{lug}F_y/\Omega_v$ =	3384	lbs <--- Shear at Lug tab
$P_a = (A_{brg\ col})(2.1)F_y/\Omega_b$ =	4539	lbs <--- Lug Brg on Column Wall
T_A = min(V_a, P_a) =	3384	lbs
$M_A = (T_A)(d_{CL})+(T_1)(b_{lug\ h}/2) + M_{x\ pl\ all}$ =	19940	in-lbs
M_{lat} (per RISA, Joint J47) =	1800	in-lbs
$M_{gravity} = (1/2)[wL^2/12]$ =	1200	in-lbs
Total Connector Moment, M = M_{lat}+M_{grav} =	3000	in-lbs
M / M_A =	0.150	< 1.0 O.K.

Connector Plate Bending Capacity:

$A_{g\ pl}$ =	0.5215 in^2		
$r_o = r_i + t$ =	0.3125 in	L_x (long leg) =	2.1875 in
r_i =	0.1250 in	L_y(short leg) =	0.8750 in
x_{bar} =	0.8907 in	y_{bar} =	0.2121 in
I_x =	0.0199 in^4	$S_x = I_x / y_{bar}$ =	0.0938 in^3

$M_{x\ pl\ all}$ = (bent about Long Leg - (x-axis)) = $(1.5)(F_y)(S_x)/\Omega_b$ = 4632 in-lbs (AISC Eq. F10-1)

Shear Capacity check:

$V_a = V_n/\Omega_v = 0.6A_{lug}F_y/\Omega_v$ =	3384	lbs / lug
V (Impact) =	150	lbs - 25% Max. Shelf Load at beam end (RMI section 2.3)
V (per RISA, member SB42) =	587	lbs - total beam end shear
V / V_A =	0.109	< 1.0 O.K.

Beam to Connector Weld check:

Shelf Beam Wall thickness, t_{beam} =	0.075	in
Shelf Beam Depth, $H_{bm} = H_{weld}$ =	4.100	in
Top Beam Flange width, B_{weld} =	1.625	in
Beam Haunch depth, Y_{weld} =	1.500	in
Corner offset distance, d_{corner} =	0.200	in
Vertical Weld length, L_1 =	3.700	in
Top Weld length, L_2 =	1.225	in
Vertical Weld length, L_3 =	1.175	in
Total Length of Weld, L_w =	6.100	in
Distance to Y-axis Centroid, =	0.47618	in
Distance to X-axis Centroid, =	2.70487	in
Moment Interia of Weld - X-axis, $I_{x\ weld}$ =	0.71829	in^4
Moment Interia of Weld - Y-axis, $I_{y\ weld}$ =	0.23701	in^4
Polar Moment of Inertia, $I_p = I_x + I_y$ =	0.95530	in^4
$F_{w\ all}$= $[(0.6)F_{exx}/\Omega_{weld}]*(1+0.5\sin^{1.5}(\Theta))$ =	31500	psi
$M_{all} = (F_{w\ all})(I_p)/c$ =	12013	in-lbs
Total Connector Moment, M = M_{lat}+M_{grav} =	3000	in-lbs
M / M_{all} =	0.250	< 1.0 O.K.
Interior Bend Radius =	0.125	in
Fillet Weld leg width =	0.125	in
Weld throat width, w_w =	0.08839	in
Ω_{weld} =	2.00	
F_{exx} =	70	ksi
	2.73	in <--- distance to bottom of L_3

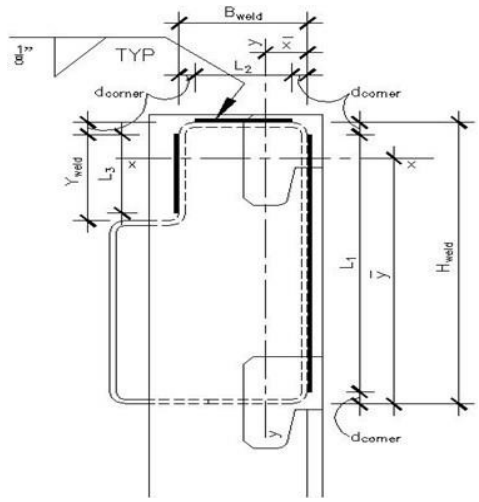

JOHNSTON BURKHOLDER ASSOCIATES
consulting structural engineers
930 CENTRAL · KANSAS CITY, MO 64105
816.421.4200 · WWW.JBAENGR.COM

PROJECT NO: 2401802403		SHEET NO: 61	OF: 66
PROJECT NAME: #02403 - Puyallup, WA			
MADE BY: KSH		DATE: 04/19/24	
CHECKED BY:		DATE:	

Storage Rack - Seismic Design — Rack W-int — 48-84 075B

IBC 2021 / ASCE 7-16 / 2016 RMI (ANSI/MH16.3-16)

Seismic Importance Factor (I_p) =	1.5	<--- Public Access Allowed (Typ. at Sales Floor / Garden Center Areas)
Supported on Elevated Floor (Y/N):	No	
Max. Weight per level (2 Pallets / shelf) =	1200 lbs/shelf	
Weight of Unit =	150 lbs	<--- Shipping weight per Manuf.
Rack Trib width (CL-to-CL of frames) =	96 in	Total Shelf Load
h_9 =	0 in	0 lbs
h_8 =	0 in	0 lbs
h_7 =	0 in	0 lbs
h_6 =	0 in	0 lbs
h_5 =	0 in	0 lbs
h_4 =	0 in	0 lbs
h_3 =	36 in	1200 lbs
h_2 =	36 in	1200 lbs
h_1 =	12 in	1200 lbs
Total Shelf Height, H_t =	84 in	
Unit Height, H_u =	84 in	
Unit Base Depth, D =	48 in	

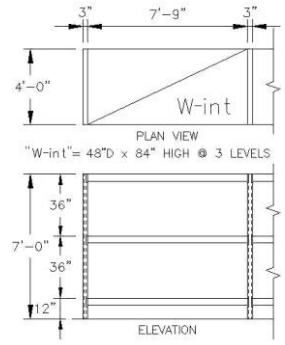

Note: Per ANSI MH16.1, Section 6.3, effective lengths may be determined by rational methods consistent with AISI or AISC. AISC Design by Second-Order Analysis, Section C2.2a is used. Notional loads are applied to gravity load cases and K=1.0 is used since the ratio of second-order drift to first-order drift (P-δ) / (P-Δ) < 1.1.

Overturning Stability (Load cases are per ASCE 7 sect. 15.5.3.6):

Load Case 1 [RMI sect. 2.6.8(1) - PL=0.67(PL)]
[RMI sect 2.6.2, PL_{RF} = 1.0]

Seismic $(C_s)(I_p)$ = 0.315 W_s (Braced)
0.108 W_s (Down Aisle)

$W_s = (0.67)(PL_{RF})((0.67)PL)+DL$ = 1766.0 lbs

Base Shear, $V = C_s I_p W_s$ = 557.0 lbs (Braced)
191.2 lbs (Down Aisle)

Horizontal forces / level, $F_x = C_{vx}V$ (RMI sect 2.6.6)
(Service Loads, E = 0.7)

F_9 =	0.0 lbs	@ 0 in (CM)
F_8 =	0.0 lbs	@ 0 in (CM)
F_7 =	0.0 lbs	@ 0 in (CM)
F_6 =	0.0 lbs	@ 0 in (CM)
F_5 =	0.0 lbs	@ 0 in (CM)
F_4 =	0.0 lbs	@ 0 in (CM)
F_3 =	195.1 lbs	@ 104 in (CM)
F_2 =	123.8 lbs	@ 66 in (CM)
F_1 =	56.3 lbs	@ 30 in (CM)
F_u =	14.7 lbs	@ 42 in (CM)

Note: (CM) = Product Center of Mass typically 20 inches above the top of shelf at each level.

Calculate Overturning Moment (Service), $M_{OT} = \Sigma f_i h_i$
M_{OT} = 30767 in-lbs
Calculate Resisting Moment (Service), M_{RST}
M_{RST} = 61488 in-lbs
Factor of Safety, $FOS_{OT} = M_{RST}/M_{OT}$ = 1.999

NO UPLIFT - NO ANCHORS REQUIRED

Load Case 2 [RMI sect. 2.6.8(2), PL=1.0(PL)]
[RMI 2.6.2, PL_{RF}=1.0]

Seismic $(C_s)(I_p)$ = 0.315 W_s (Braced)
0.108 W_s (Down Aisle)

$W_s = (0.67)(PL_{RF})((1)PL)+DL$ = 954.0 lbs

Base Shear, $V = C_s I_p W_s$ = 300.9 lbs (Braced)
103.3 lbs (Down Aisle)

Horizontal forces / level, $F_x = C_{vx}V$ (RMI sect 2.6.6)
(Service Loads)

F_9 =	0.0 lbs	
F_8 =	0.0 lbs	
F_7 =	0.0 lbs	
F_6 =	0.0 lbs	
F_5 =	0.0 lbs	
F_4 =	0.0 lbs	
F_3 =	200.5 lbs	@ 104 in (CM)
F_2 =	0.0 lbs	
F_1 =	0.0 lbs	
F_u =	10.1 lbs	@ 42 in (CM)

Calculate Overturning Moment (Service), $M_{OT} = \Sigma f_i h_i$
M_{OT} = 21276 in-lbs
Calculate Resisting Moment (Service), M_{RST}
M_{RST} = 32400 in-lbs
Factor of Safety, $FOS_{OT} = M_{RST}/M_{OT}$ = 1.523

NO UPLIFT - NO ANCHORS REQUIRED

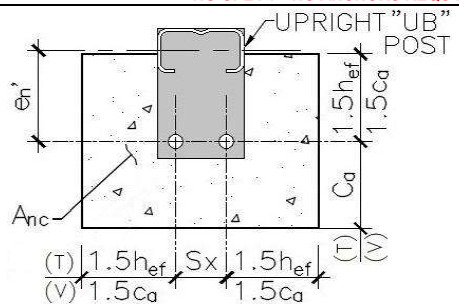

Anchor Design (using "Cracked Concrete" Properties)

Upright Post Type =	UB	
Try:	3/8" DIA Hilti Kwik Bolt-TZ2 (CS) Anchor - 2 1/2" embed.	
Embedment (h_{nom}) =	2.5 in	
f_c' =	3500 psi	
e_h' =	3.3125 in	<-- Eccen. of Anchor
h_{ef} =	2 in	$1.5(h_{ef})$ = 3.000 in
Conc. thickness, t =	4 in	$1.5(C_a)$ = 5.250 in
# of Anchors, n =	1	
Sx =	0.00 in	
Sy =	0.00 in	
A_{se} =	0.051 in^2	

Base Reactions:

	LC #1		LC #2	
R_h =	195 lbs		105 lbs	
R_v =	0 lbs		0 lbs	
Overturning FOS =	1.999	>= 1.5	1.523	>= 1.5
Sliding Restraint, R_{RST}/FOS =	381lbs / 1.954	>= 1.5 OK	230lbs / 2.185	>= 1.5 OK
Reactions (Factored Loads):	LC #1		LC #2	
Base Shear (R_{uh}) =	557 lbs		301 lbs	
Net Uplift (R_{uv}) =	0 lbs		0 lbs	
Overturning + Gravity (P_u) =	3302 lbs		1659 lbs	
Tension Allowables				
Steel Strength, ϕN_{sa} =	4219 lbs	<--ACI 318-14 Eq 17.4.1.2		
Concrete Breakout, $(0.75)\phi N_{cbq}$ =	1713 lbs	<--ACI 318-14 Eq 17.4.2.1b		
Pullout Strength, $(0.75)\phi N_{pn}$ =	NA	<--ACI 318-14 Eq 17.4.3.1		
Factored Tension Load, (N_u) =	0 lbs	(LC #1)	0 lbs	(LC #2)
max tension stress ratio (TSR) =	0.000	OK (LC#1)	0.000	OK (LC#2)
Shear Allowables				
Steel Strength, ϕV_{sa} =	2031 lbs	<--ACI 318-14 Eq 17.5.1.2c		
Concrete breakout (Yg), ϕV_{cbq} =	1238 lbs	<--ACI 318-14 Eq 17.5.2.1b		
Concrete breakout (Xg), ϕV_{cbq} =	759 lbs	<--ACI 318-14 Eq 17.5.2.1b		
Concrete pryout, ϕV_{cpq} =	2460 lbs	<--ACI 318-14 Eq 17.5.3.1b		
	LC #1		LC #2	
Factored Shear Load (V_u) : Braced =	557 lbs		301 lbs	
Down Aisle =	191 lbs		103 lbs	
Max shear stress ratio (VSR) : Braced =	0.450	OK	0.243	OK
Down Aisle =	0.252	OK	0.136	OK
Braced (TSR+VSR <= 1.2) =	0.450	<= 1.2 OK - LC #1 Controls		
Down Aisle (VSR <= 1.0) =	0.252	OK - LC #1 Controls		

USE: NO UPLIFT - NO ANCHORS REQUIRED

JOHNSTON BURKHOLDER ASSOCIATES
consulting structural engineers
930 CENTRAL · KANSAS CITY, MO 64105
816.421.4200 · WWW.JBAENGR.COM

PROJECT NO: 2401802403	SHEET NO: 62	OF: 66
PROJECT NAME: #02403 - Puyallup, WA		
MADE BY: KSH	DATE: 04/19/24	
CHECKED BY:	DATE:	

Storage Rack - Seismic Design Rack W-int 48-84 075B

IBC 2021 / ASCE 7-16 / 2016 RMI (ANSI/MH16.3-16)

Punching Shear Check:
(Design per ACI 318-14 section 14.5.5)

Max. Factored Vertical Load (P_u) =	3302	lbs
Slab Concrete f'c =	3500	psi
Slab thickness (t) =	4	in.
Rack Post X-X =	3.00	in.
Rack Post Y-Y =	4.75	in.
b_o =	31.50	in.
β =	1.58	
V_n =	22494	lbs Eq. (22-10)
V_n max =	19828	lbs Eq. (22-10)
ϕV_n =	11897	lbs
$V_u/\phi V_n$ =	0.278	< 1.0 O.K.

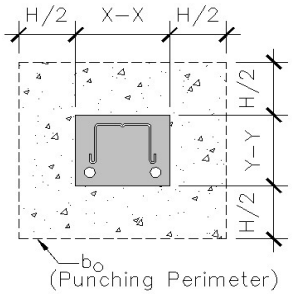

Max Vertical Load (ASD) - RMI, sect 2.1 - LC#4:
P = (1+0.11Sds)DL+(3/4)[(1+0.14Sds)PL+(0.7)EL]

S_{DS} =	0.841	(Ip=1.5)
DL = (Frame Wt/2) =	75	lbs
PL = Σ(Shelf Load h_1 - h_9)/2 =	1800	lbs
EL = $M_{OT, LC\#1}$ / ((0.7)(D)) =	1367	lbs
P =	2072	lbs <--- At Each Post

Max Vertical Load (LRFD) - RMI, sect 2.2 - LC#5:
P = (1.2+0.2Sds)DL + (0.85+0.2Sds)PL + EL
P_u = 3302 lbs <--- At Each Post

Slab tension based on Soil bearing area check:

Allowable soil bearing =	1500	psf
Max. Service Vertical Load (P) =	2072	lbs
Area reqd. for bearing (A_{reqd}) =	1.38	ft^2
"b" distance =	14.10	in
Slab thickness (t) =	4.00	in
S = (1")$(t)^2$/6 =	2.67	in^3/in
ϕM_{nt} (tension allowable) = f_t*7.5*[$(f'_c)^{1/2}$]*S =	709.93	in-lb/in
Factored uniform bearing, w_u = P_u / A_{reqd} =	16.60	lb/in/in
M_u = $wL^2/3$ = $(w_u)[(b-\min(X-X,Y-Y))/2)^2]$ / 3 =	170.55	in-lb/in - Defl. End M1 = 86 in-lb/in
$M_u/\phi M_{nt}$ =	0.240	< 1.0 O.K.

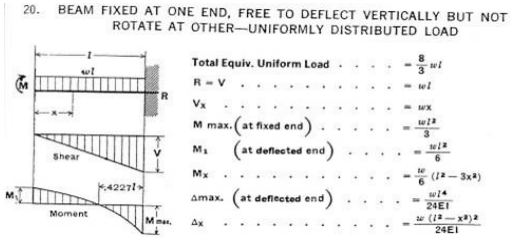

Rack FOS Overturning with Resistance from Effective Weight of Slab on Grade:

Width of Single Rack =	48	in
Slab thickness (t) =	4.0	in
Modulus of Rupture, f_r = 7.5*SQRT(f'c) =	443.7	psi
Concrete Slab Section Modulus, S = b$(t)^2$/6 =	32.0	in^3/ft
Allowable Concrete Slab Bending Moment, M_{all}/FS = S*f_r/1.5 =	788.8	ft*lbs/ft
Effective Cantilever Span Length (l_c) at M_{all} =	5.6	ft
Total Length of Slab (l_c + Width of Single Rack) =	9.6	ft
Trib. Width of Slab = Trib width of Rack =	8.0	ft
Weight of Concrete Slab at Rack (P_{conc}) =	3846.9	lbs
Resisting Moment - Concrete Slab at Rack, $M_{RST(slab)}$ = P_{conc} * l_c/2 =	221975	in*lbs
Load Combination #1: M_{OT} =	30767	in*lbs
$M_{RST(Rack)}$ + $M_{RST(slab)}$ =	283463	in*lbs
Total Overturning FOS =	9.213	OK
Load Combination #2: M_{OT} =	21276	in*lbs
$M_{RST(Rack)}$ + $M_{RST(slab)}$ =	254375	in*lbs
Total Overturning FOS =	11.956	OK

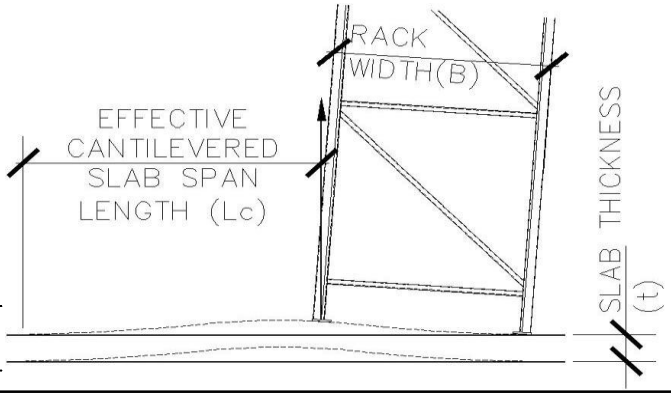

Upright Frame Member/Connection Design:

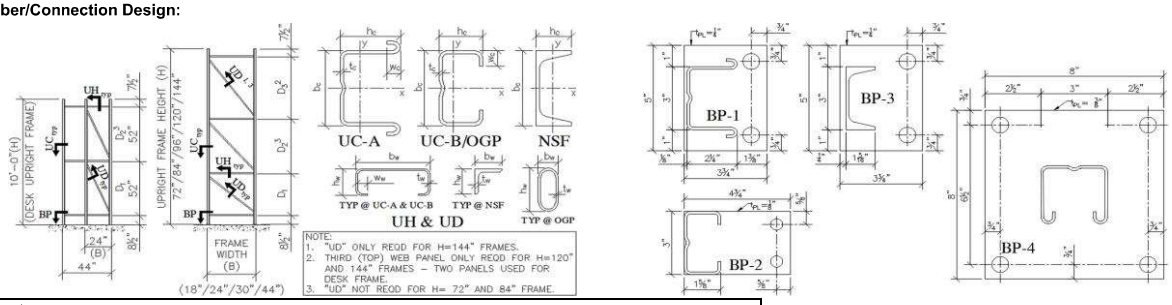

Upright Frame Geometry

Height, H (in)	Width, B (in)	Panel - D_1, in	Panel - D_2, in	Panel - D_3, in	Frame Post Type	Base PL Type	Frame Type
84	48	40	28	0	UB	BP-2	Typical

Upright Column (UC) Section Properties

Mark :	UCA300x225x0075					
b_c (in)	h_c (in)	t_c (in)	w_c (in)	A_g (in^2)	A_n(in^2)	x_{bar} (in)
3.000	2.250	0.075	0.500	0.637	0.511	0.946
I_x (in^4)	S_x (in^3)	I_y (in^4)	S_y (in^3)	C_w (in^6)	J (in^4)	r_o (in)
0.937	0.511	0.387	0.297	0.514	0.00119	2.502
r_x (in) =	1.354	r_y (in) =	0.870			

Upright Frame Horizontal (UH) / Diagonal (UD) Brace Section Properties

Mark :	C275x1063x0062					
b_w (in)	h_w (in)	t_w (in)	w_w (in)	A_g (in^2)	x_{bar}(in)	x_o (in)
2.750	1.063	0.062	0.438	0.325	0.352	0.834
I_x (in^4)	S_x (in^3)	I_y (in^4)	S_y (in^3)	C_w (in^6)	J (in^4)	r_o (in)
0.360	0.262	0.050	0.070	0.093	0.00042	1.399
r_x (in) =	1.053	r_y (in) =	0.391			

Upright Frame Shelf Beam Section Properties

Mark :	B410x250x0066		
d (in)	b (in)	c_h (in)	c_w (in)
4.100	2.500	1.625	0.875
t (in)	I_x (in^4)	S_x (in^3)	r_x (in)
0.066	1.716	0.792	1.441
A_g (in^2)	I_y (in^4)	S_y (in^3)	r_y (in)
0.827	0.761	0.557	0.960
x_{bar} (in) =	1.133	y_{bar} (in) =	1.932

Upright Post Base Plate Design:

Check for Axial Compression, P_{max} :

Base Plate Type =	BP-2	
Base Plate Depth =	3.00	in
Base Plate Width =	4.75	in
Default Plate Thickness =	0.1250	in
Base Plater Area, A_{BP} =	14.25	in^2
Upright Width, b_c =	3.000	in
Upright Depth, h_c =	2.250	in
Upright Post Brg Area, A_{Post} =	6.75	in^2
A_{reqd} / A_{Post} =	0.396	< 1.0 O.K.
P_{max} (per RISA) =	6554	lbs <--- Using Strength Design Load Combinations per RMI, sect. 2.2
T_{max} (per RISA) =	2021	lbs
Design Bearing Pressure, f_p =	459.93	psi
Required Bearing Area, $A_{reqd} = P_{max}/(0.7f'_c)$ =	2.6751	in^2

Upright Frame Steel Material:

ASTM A570, Grade 55

Fy =	55,000	psi
Fu =	70,000	psi
E =	29,000	ksi

<---- Base Plate Size and Thickness is acceptable for Axial Compression

Check for Axial Tension, T_{max} :

Tension force per bolt, f_t =	2021.00	lbs
Bolt CL dist to face of Post =	0.63	in
Effective Plate Width, b_{eff} =	3.75	in

Min. Thickness required, t_{pl} = 0.17516 in <--- No Good - Increase Thickness

Shelf Beam End Connections (2 Lug Connector)

ASTM- A570, GR. 35 (F_y= 55 ksi, F_u= 70 ksi) Ω_v = 1.6 Ω_b = 1.67

Beam End Connector Bending Capacity check:

λ_p = 0.54*SQRT(E/Fy) =	12.3997	
Connector PL Thickness, t =	0.1875	in
Net Lug width, b_{lug} =	0.6563	in
Min. Beam Depth, H_{bm} =	4.100	in
Net Lug Height, $b_{lug\ h}$ =	0.875	in
Uniform beam load, w =	75.0	lb/ft <--- (1/2 Max. Shelf Load) / (Rack Trib width)

λ_{min}, b/t = 4.6667 < λ_p

$A_{lug} = (t)(b_{lug\ h})$ =	0.16406	in^2
$A_{brg\ col} = (t_c)(b_{lug\ h})$ =	0.06563	in^2
d_{CL}= 4"+ $b_{lug\ h}$ - $b_{lug\ h}$/2 =	4.4375	in

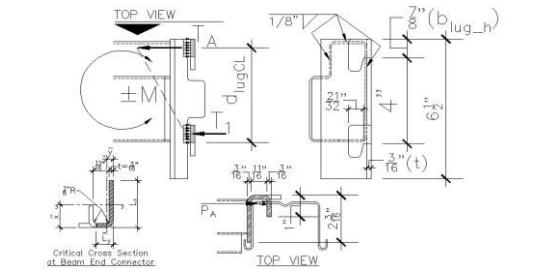

Beam End Section at 2 Lug Connector

Determine max. T_A for connector lug (shear or bearing on column):

$V_a = V_n/\Omega_v = 0.6A_{lug}F_y/\Omega_v$ =	3384	lbs <--- Shear at Lug tab
$P_a = (A_{brg\ col})(2.1)F_y/\Omega_b$ =	4539	lbs <--- Lug Brg on Column Wall
T_A = min(V_a, P_a) =	3384	lbs
$M_A = (T_A)(d_{CL})+(T_1)(b_{lug\ h}/2) + M_{x\ pl\ all}$ =	19940	in-lbs
M_{lat} (per RISA, Joint J47) =	1800	in-lbs
$M_{gravity} = (1/2)[wL^2/12]$ =	2400	in-lbs
Total Connector Moment, M = M_{lat}+M_{grav} =	4200	in-lbs
M / M_A =	0.211	< 1.0 O.K.

Connector Plate Bending Capacity:

$A_{g\ pl}$ =	0.5215 in^2		
$r_o = r_i + t$ =	0.3125 in	L_x (long leg) =	2.1875 in
r_i =	0.1250 in	L_y(short leg) =	0.8750 in
x_{bar} =	0.8907 in	y_{bar} =	0.2121 in
I_x =	0.0199 in^4	$S_x = I_x / y_{bar}$ =	0.0938 in^3

$M_{x\ pl\ all}$ = (bent about Long Leg - (x-axis)) = $(1.5)(F_y)(S_x)/\Omega_b$ = 4632 in-lbs (AISC Eq. F10-1)

Shear Capacity check:

$V_a = V_n/\Omega_v = 0.6A_{lug}F_y/\Omega_v$ =	3384	lbs / lug
V (Impact) =	300	lbs - 25% Max. Shelf Load at beam end (RMI section 2.3)
V (per RISA, member SB42) =	587	lbs - total beam end shear
V / V_A =	0.131	< 1.0 O.K.

Beam to Connector Weld check:

Shelf Beam Wall thickness, t_{beam} =	0.075	in
Shelf Beam Depth, $H_{bm} = H_{weld}$ =	4.100	in
Top Beam Flange width, B_{weld} =	1.625	in
Beam Haunch depth, Y_{weld} =	1.500	in
Corner offset distance, d_{corner} =	0.200	in
Vertical Weld length, L_1 =	3.700	in
Top Weld length, L_2 =	1.225	in
Vertical Weld length, L_3 =	1.175	in
Total Length of Weld, L_w =	6.100	in
Distance to Y-axis Centroid, =	0.47618	in
Distance to X-axis Centroid, =	2.70487	in
Moment Interia of Weld - X-axis, $I_{x\ weld}$ =	0.71829	in^4
Moment Interia of Weld - Y-axis, $I_{y\ weld}$ =	0.23701	in^4
Polar Moment of Inertia, $I_p = I_x + I_y$ =	0.95530	in^4
$F_{w\ all}$= $[(0.6)F_{exx}/\Omega_{weld}]*(1+0.5\sin^{1.5}(\Theta))$ =	31500	psi
$M_{all} = (F_{w\ all})(I_p)/c$ =	12013	in-lbs
Total Connector Moment, M = M_{lat}+M_{grav} =	4200	in-lbs
M / M_{all} =	0.350	< 1.0 O.K.
Interior Bend Radius =	0.125	in
Fillet Weld leg width =	0.125	in
Weld throat width, w_w =	0.08839	in
Ω_{weld} =	2.00	
F_{exx} =	70	ksi
	2.73	in <--- distance to bottom of L_3

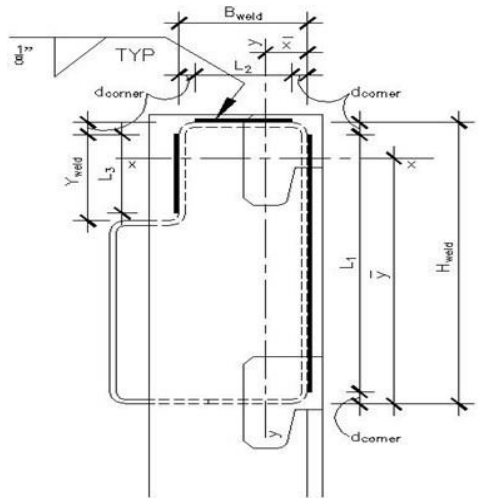

JOHNSTON BURKHOLDER ASSOCIATES
consulting structural engineers
930 CENTRAL · KANSAS CITY, MO 64105
816.421.4200 · WWW.JBAENGR.COM

PROJECT NO: 2401802403		SHEET NO: 64	OF: 66
PROJECT NAME: #02403 - Puyallup, WA			
MADE BY: KSH		DATE: 04/19/24	
CHECKED BY:		DATE:	

Storage Rack - Seismic Design — Rack W-int 44 — 44-84 075B

IBC 2021 / ASCE 7-16 / 2016 RMI (ANSI/MH16.3-16)

Seismic Importance Factor (I_p) =	1.5	<--- Public Access Allowed (Typ. at Sales Floor / Garden Center Areas)
Supported on Elevated Floor (Y/N):	No	
Max. Weight per level (2 Pallets / shelf) =	1200 lbs/shelf	
Weight of Unit =	150 lbs	<--- Shipping weight per Manuf.
Rack Trib width (CL-to-CL of frames) =	96 in	Total Shelf Load
h_9 =	0 in	0 lbs
h_8 =	0 in	0 lbs
h_7 =	0 in	0 lbs
h_6 =	0 in	0 lbs
h_5 =	0 in	0 lbs
h_4 =	0 in	0 lbs
h_3 =	36 in	1200 lbs
h_2 =	36 in	1200 lbs
h_1 =	12 in	1200 lbs
Total Shelf Height, H_t =	84 in	
Unit Height, H_u =	84 in	
Unit Base Depth, D =	44 in	

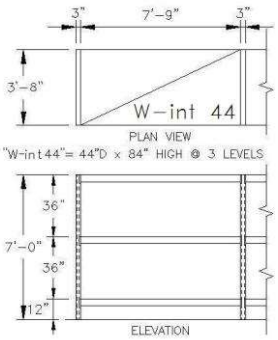

Note: Per ANSI MH16.1, Section 6.3, effective lengths may be determined by rational methods consistent with AISI or AISC. AISC Design by Second-Order Analysis, Section C2.2a is used. Notional loads are applied to gravity load cases and K=1.0 is used since the ratio of second-order drift to first-order drift (P-δ) / (P-Δ) < 1.1.

Overturning Stability (Load cases are per ASCE 7 sect. 15.5.3.6):

Load Case 1 [RMI sect. 2.6.8(1) - PL=0.67(PL)]
[RMI sect 2.6.2, PL_{RF} = 1.0]

Seismic $(C_s)(I_p)$ =	0.315	W_s (Braced)
	0.108	W_s (Down Aisle)
$W_s = (0.67)(PL_{RF})((0.67)PL)+DL$ =	1766.0 lbs	
Base Shear, $V = C_s I_p W_s$ =	557.0 lbs	(Braced)
	191.2 lbs	(Down Aisle)

Horizontal forces / level, $F_x = C_{vx}V$ (RMI sect 2.6.6)
(Service Loads, E = 0.7)

F_9 =	0.0 lbs	@ 0 in (CM)
F_8 =	0.0 lbs	@ 0 in (CM)
F_7 =	0.0 lbs	@ 0 in (CM)
F_6 =	0.0 lbs	@ 0 in (CM)
F_5 =	0.0 lbs	@ 0 in (CM)
F_4 =	0.0 lbs	@ 0 in (CM)
F_3 =	195.1 lbs	@ 104 in (CM)
F_2 =	123.8 lbs	@ 66 in (CM)
F_1 =	56.3 lbs	@ 30 in (CM)
F_u =	14.7 lbs	@ 42 in (CM)

Note: (CM) = Product Center of Mass typically 20 inches above the top of shelf at each level.

Calculate Overturning Moment (Service), $M_{OT} = \Sigma f_i h_i$
M_{OT} = 30767 in-lbs
Calculate Resisting Moment (Service), M_{RST}
M_{RST} = 56364 in-lbs
Factor of Safety, $FOS_{OT} = M_{RST}/M_{OT}$ = 1.832
NO UPLIFT - NO ANCHORS REQUIRED

Load Case 2 [RMI sect. 2.6.8(2), PL=1.0(PL)]
[RMI 2.6.2, PL_{RF}=1.0]

Seismic $(C_s)(I_p)$ =	0.315	W_s (Braced)
	0.108	W_s (Down Aisle)
$W_s = (0.67)(PL_{RF})((1)PL)+DL$ =	954.0 lbs	
Base Shear, $V = C_s I_p W_s$ =	300.9 lbs	(Braced)
	103.3 lbs	(Down Aisle)

Horizontal forces / level, $F_x = C_{vx}V$ (RMI sect 2.6.6)
(Service Loads)

F_9 =	0.0 lbs	
F_8 =	0.0 lbs	
F_7 =	0.0 lbs	
F_6 =	0.0 lbs	
F_5 =	0.0 lbs	
F_4 =	0.0 lbs	
F_3 =	200.5 lbs	@ 104 in (CM)
F_2 =	0.0 lbs	
F_1 =	0.0 lbs	
F_u =	10.1 lbs	@ 42 in (CM)

Calculate Overturning Moment (Service), $M_{OT} = \Sigma f_i h_i$
M_{OT} = 21276 in-lbs
Calculate Resisting Moment (Service), M_{RST}
M_{RST} = 29700 in-lbs
Factor of Safety, $FOS_{OT} = M_{RST}/M_{OT}$ = 1.396
NO UPLIFT - ANCHORS REQUIRED

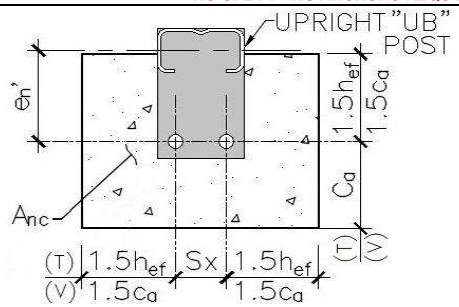

Anchor Design (using "Cracked Concrete" Properties)

Upright Post Type =	UB	
Try:	3/8" DIA Hilti Kwik Bolt-TZ2 (CS) Anchor - 2 1/2" embed.	
Embedment (h_{nom}) =	2.5 in	
f_c' =	3500 psi	
e_h' =	3.3125 in	<-- Eccen. of Anchor
h_{ef} =	2 in	$1.5(h_{ef})$ = 3.000 in
Conc. thickness, t =	4 in	$1.5(C_a)$ = 5.250 in
# of Anchors, n =	1	
Sx =	0.00 in	
Sy =	0.00 in	
A_{se} =	0.051 in^2	

Base Reactions:

	LC #1		LC #2	
R_h =	195 lbs		105 lbs	
R_v =	0 lbs		0 lbs	
Overturning FOS =	1.832	>= 1.5	1.396	< 1.5 ABs Reqd
Sliding Restraint, R_{RST}/FOS =	396lbs / 2.029 >= 1.5 OK		240lbs / 2.28 >= 1.5 OK	
Reactions (Factored Loads):	LC #1		LC #2	
Base Shear (R_{uh}) =	557 lbs		301 lbs	
Net Uplift (R_{uv}) =	0 lbs		0 lbs	
Overturning + Gravity (P_u) =	3426 lbs		1745 lbs	
Tension Allowables				
Steel Strength, ϕN_{sa} =	4219 lbs	<--ACI 318-14 Eq 17.4.1.2		
Concrete Breakout, $(0.75)\phi N_{cbq}$ =	1713 lbs	<--ACI 318-14 Eq 17.4.2.1b		
Pullout Strength, $(0.75)\phi N_{pn}$ =	NA	<--ACI 318-14 Eq 17.4.3.1		
Factored Tension Load, (N_u) =	0 lbs	(LC #1)	0 lbs	(LC #2)
max tension stress ratio (TSR) =	0.000	OK (LC#1)	0.000	OK (LC#2)
Shear Allowables				
Steel Strength, ϕV_{sa} =	2031 lbs	<--ACI 318-14 Eq 17.5.1.2c		
Concrete breakout (Yg), ϕV_{cbq} =	1238 lbs	<--ACI 318-14 Eq 17.5.2.1b		
Concrete breakout (Xg), ϕV_{cbq} =	759 lbs	<--ACI 318-14 Eq 17.5.2.1b		
Concrete pryout, ϕV_{cpq} =	2460 lbs	<--ACI 318-14 Eq 17.5.3.1b		
	LC #1		LC #2	
Factored Shear Load (V_u) : Braced =	557 lbs		301 lbs	
Down Aisle =	191 lbs		103 lbs	
Max shear stress ratio (VSR) : Braced =	0.450	OK	0.243	OK
Down Aisle =	0.252	OK	0.136	OK
Braced (TSR+VSR <= 1.2) =	0.450	<= 1.2 OK - LC #1 Controls		
Down Aisle (VSR <= 1.0) =	0.252	OK - LC #1 Controls		

USE: (1) 3/8" DIA Hilti Kwik Bolt-TZ2 (CS) Anchor - 2 1/2" embed. ICC REPORT #ESR-4266

JOHNSTON BURKHOLDER ASSOCIATES
consulting structural engineers
930 CENTRAL · KANSAS CITY, MO 64105
816.421.4200 · WWW.JBAENGR.COM

PROJECT NO:	SHEET NO:	OF:
2401802403	65	64

PROJECT NAME: #02403 - Puyallup, WA

MADE BY:	DATE:
KSH	04/19/24
CHECKED BY:	DATE:

Storage Rack - Seismic Design Rack W-int 44 44-84 075B

IBC 2021 / ASCE 7-16 / 2016 RMI (ANSI/MH16.3-16)

Punching Shear Check:
(Design per ACI 318-14 section 14.5.5)

Max. Factored Vertical Load (P_u) =	3426	lbs
Slab Concrete f'c =	3500	psi
Slab thickness (t) =	4	in.
Rack Post X-X =	3.00	in.
Rack Post Y-Y =	4.75	in.
b_o =	31.50	in.
β =	1.58	
V_n =	22494	lbs Eq. (22-10)
V_n max =	19828	lbs Eq. (22-10)
ϕV_n =	11897	lbs
$V_u/\phi V_n$ =	0.288	< 1.0 O.K.

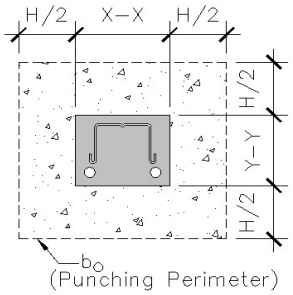

Max Vertical Load (ASD) - RMI, sect 2.1 - LC#4:
P = (1+0.11Sds)DL+(3/4)[(1+0.14Sds)PL+(0.7)EL]

S_{DS} =	0.841	(Ip=1.5)
DL = (Frame Wt/2) =	75	lbs
PL = Σ(Shelf Load h_1 - h_9)/2 =	1800	lbs
EL = $M_{OT, LC\#1}$ / ((0.7)(D)) =	1491	lbs
P =	2115	lbs <--- At Each Post

Max Vertical Load (LRFD) - RMI, sect 2.2 - LC#5:
P = (1.2+0.2Sds)DL + (0.85+0.2Sds)PL + EL
P_u = 3426 lbs <--- At Each Post

Slab tension based on Soil bearing area check:

Allowable soil bearing =	1500	psf
Max. Service Vertical Load (P) =	2115	lbs
Area reqd. for bearing (A_{reqd}) =	1.41	ft^2
"b" distance =	14.25	in
Slab thickness (t) =	4.00	in
S = (1")$(t)^2$/6 =	2.67	in^3/in
ϕM_{nt} (tension allowable) = f_t*7.5*[$(f'_c)^{1/2}$]*S =	709.93	in-lb/in
Factored uniform bearing, w_u = P_u / A_{reqd} =	16.87	lb/in/in
M_u = $wL^2/3$ = $(w_u)[(b-\min(X-X,Y-Y))/2)^2]$ / 3 =	177.94	in-lb/in - Defl. End M1 = 89 in-lb/in
$M_u/\phi M_{nt}$ =	0.251	< 1.0 O.K.

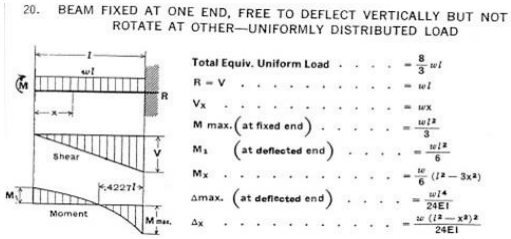

Rack FOS Overturning with Resistance from Effective Weight of Slab on Grade:

Width of Single Rack =	44	in
Slab thickness (t) =	4.0	in
Modulus of Rupture, f_r = 7.5*SQRT(f'c) =	443.7	psi
Concrete Slab Section Modulus, S = b$(t)^2$/6 =	32.0	in^3/ft
Allowable Concrete Slab Bending Moment, M_{all}/FS = S*f_r/1.5 =	788.8	ft*lbs/ft
Effective Cantilever Span Length (l_c) at M_{all} =	5.6	ft
Total Length of Slab (l_c + Width of Single Rack) =	9.3	ft
Trib. Width of Slab = Trib width of Rack =	8.0	ft
Weight of Concrete Slab at Rack (P_{conc}) =	3713.5	lbs
Resisting Moment - Concrete Slab at Rack, $M_{RST(slab)}$ = P_{conc} * l_c/2 =	206854	in*lbs
Load Combination #1: M_{OT} =	30767	in*lbs
$M_{RST(Rack)}$ + $M_{RST(slab)}$ =	263218	in*lbs
Total Overturning FOS =	8.555	OK
Load Combination #2: M_{OT} =	21276	in*lbs
$M_{RST(Rack)}$ + $M_{RST(slab)}$ =	236554	in*lbs
Total Overturning FOS =	11.119	OK

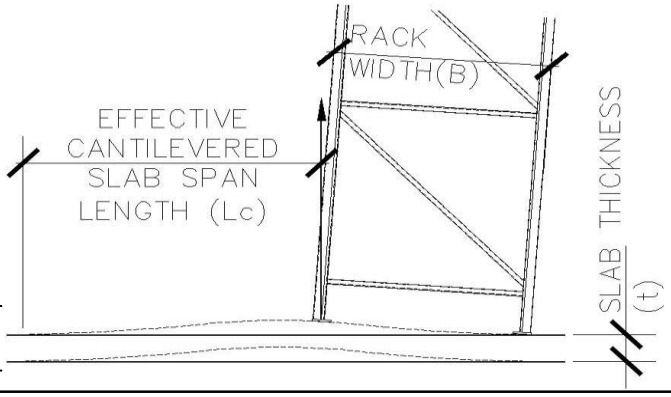

Upright Frame Member/Connection Design:

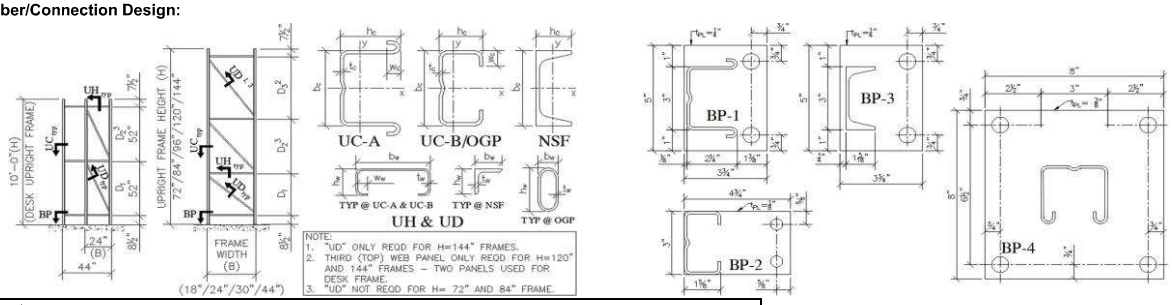

Upright Frame Geometry

Height, H (in)	Width, B (in)	Panel - D_1, in	Panel - D_2, in	Panel - D_3, in	Frame Post Type	Base PL Type	Frame Type
84	44	40	28	0	UB	BP-2	Typical

Upright Column (UC) Section Properties

Mark :	UCA300x225x0075					
b_c (in)	h_c (in)	t_c (in)	w_c (in)	A_g (in^2)	A_n(in^2)	x_{bar} (in)
3.000	2.250	0.075	0.500	0.637	0.511	0.946
I_x (in^4)	S_x (in^3)	I_y (in^4)	S_y (in^3)	C_w (in^6)	J (in^4)	r_o (in)
0.937	0.511	0.387	0.297	0.514	0.00119	2.502
r_x (in) =	1.354	r_y (in) =	0.870			

Upright Frame Horizontal (UH) / Diagonal (UD) Brace Section Properties

Mark :	C275x1063x0062					
b_w (in)	h_w (in)	t_w (in)	w_w (in)	A_g (in^2)	x_{bar}(in)	x_o (in)
2.750	1.063	0.062	0.438	0.325	0.352	0.834
I_x (in^4)	S_x (in^3)	I_y (in^4)	S_y (in^3)	C_w (in^6)	J (in^4)	r_o (in)
0.360	0.262	0.050	0.070	0.093	0.00042	1.399
r_x (in) =	1.053	r_y (in) =	0.391			

Upright Frame Shelf Beam Section Properties

Mark :	B410x250x0066		
d (in)	b (in)	c_h (in)	c_w (in)
4.100	2.500	1.625	0.875
t (in)	I_x (in^4)	S_x (in^3)	r_x (in)
0.066	1.716	0.792	1.441
A_g (in^2)	I_y (in^4)	S_y (in^3)	r_y (in)
0.827	0.761	0.557	0.960
x_{bar} (in) =	1.133	y_{bar} (in) =	1.932

JOHNSTON BURKHOLDER ASSOCIATES
consulting structural engineers
930 CENTRAL · KANSAS CITY, MO 64105
816.421.4200 · WWW.JBAENGR.COM

PROJECT NO:	SHEET NO:	OF:
2401802403	66	64
PROJECT NAME: #02403 - Puyallup, WA		
MADE BY: KSH	DATE: 04/19/24	
CHECKED BY:	DATE:	

Storage Rack - Seismic Design Rack W-int 44 44-84 075B

IBC 2021 / ASCE 7-16 / 2016 RMI (ANSI/MH16.3-16)

Upright Post Base Plate Design:

Check for Axial Compression, P_{max} :

Base Plate Type =	BP-2	
Base Plate Depth =	3.00	in
Base Plate Width =	4.75	in
Default Plate Thickness =	0.1250	in
Base Plater Area, A_{BP} =	14.25	in^2
Upright Width, b_c =	3.000	in
Upright Depth, h_c =	2.250	in
Upright Post Brg Area, A_{Post} =	6.75	in^2
A_{reqd} / A_{Post} =	0.396	< 1.0 O.K.
P_{max} (per RISA) =	6554	lbs <--- Using Strength Design Load Combinations per RMI, sect. 2.2
T_{max} (per RISA) =	2021	lbs
Design Bearing Pressure, f_p =	459.93	psi
Required Bearing Area, $A_{reqd} = P_{max}/(0.7f'_c)$ =	2.6751	in^2

Upright Frame Steel Material:

ASTM A570, Grade 55

Fy =	55,000	psi
Fu =	70,000	psi
E =	29,000	ksi

<---- Base Plate Size and Thickness is acceptable for Axial Compression

Check for Axial Tension, T_{max} :

Tension force per bolt, f_t =	2021.00	lbs
Bolt CL dist to face of Post =	0.63	in
Effective Plate Width, b_{eff} =	3.75	in

Min. Thickness required, t_{pl} = 0.17516 in <--- No Good - Increase Thickness

Shelf Beam End Connections (2 Lug Connector)

ASTM- A570, GR. 35 (F_y= 55 ksi, F_u= 70 ksi) Ω_v = 1.6 Ω_b = 1.67

Beam End Connector Bending Capacity check:

λ_p = 0.54*SQRT(E/Fy) =	12.3997		λ_{min}, b/t =	4.6667	< λ_p
Connector PL Thickness, t =	0.1875	in	$A_{lug} = (t)(b_{lug\ h})$ =	0.16406	in^2
Net Lug width, b_{lug} =	0.6563	in	$A_{brg\ col} = (t_c)(b_{lug\ h})$ =	0.06563	in^2
Min. Beam Depth, H_{bm} =	4.100	in	d_{CL}= 4"+ $b_{lug\ h}$ - $b_{lug\ h}$/2 =	4.4375	in
Net Lug Height, $b_{lug\ h}$ =	0.875	in			
Uniform beam load, w =	75.0	lb/ft	<--- (1/2 Max. Shelf Load) / (Rack Trib width)		

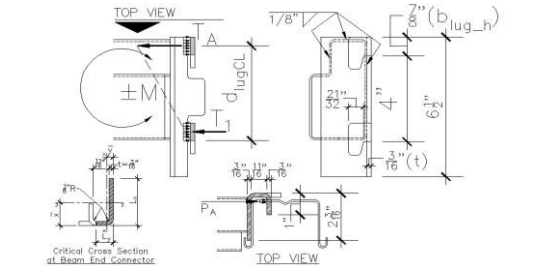

Beam End Section at 2 Lug Connector

Determine max. T_A for connector lug (shear or bearing on column):

$V_a = V_n/\Omega_v = 0.6A_{lug}F_y/\Omega_v$ =	3384	lbs <--- Shear at Lug tab
$P_a = (A_{brg\ col})(2.1)F_y/\Omega_b$ =	4539	lbs <--- Lug Brg on Column Wall
$T_A = \min(V_a, P_a)$ =	3384	lbs
$M_A = (T_A)(d_{CL})+(T_1)(b_{lug\ h}/2) + M_{x\ pl\ all}$ =	19940	in-lbs
M_{lat} (per RISA, Joint J47) =	1800	in-lbs
$M_{gravity} = (1/2)[wL^2/12]$ =	2400	in-lbs
Total Connector Moment, $M = M_{lat}+M_{grav}$ =	4200	in-lbs
M / M_A =	0.211	< 1.0 O.K.

Connector Plate Bending Capacity:

$A_{g\ pl}$ =	0.5215	in^2	
$r_o = r_i + t$ =	0.3125	in	L_x (long leg) = 2.1875 in
r_i =	0.1250	in	L_y(short leg) = 0.8750 in
x_{bar} =	0.8907	in	y_{bar} = 0.2121 in
I_x =	0.0199	in^4	$S_x = I_x / y_{bar}$ = 0.0938 in^3

$M_{x\ pl\ all}$ = (bent about Long Leg - (x-axis)) = $(1.5)(F_y)(S_x)/\Omega_b$ = 4632 in-lbs (AISC Eq. F10-1)

Shear Capacity check:

$V_a = V_n/\Omega_v = 0.6A_{lug}F_y/\Omega_v$ =	3384	lbs / lug
V (Impact) =	300	lbs - 25% Max. Shelf Load at beam end (RMI section 2.3)
V (per RISA, member SB42) =	587	lbs - total beam end shear
V / V_A =	0.131	< 1.0 O.K.

Beam to Connector Weld check:

Shelf Beam Wall thickness, t_{beam} =	0.075	in
Shelf Beam Depth, $H_{bm} = H_{weld}$ =	4.100	in
Top Beam Flange width, B_{weld} =	1.625	in
Beam Haunch depth, Y_{weld} =	1.500	in
Corner offset distance, d_{corner} =	0.200	in
Vertical Weld length, L_1 =	3.700	in
Top Weld length, L_2 =	1.225	in
Vertical Weld length, L_3 =	1.175	in
Total Length of Weld, L_w =	6.100	in
Distance to Y-axis Centroid, =	0.47618	in
Distance to X-axis Centroid, =	2.70487	in
Moment Interia of Weld - X-axis, $I_{x\ weld}$ =	0.71829	in^4
Moment Interia of Weld - Y-axis, $I_{y\ weld}$ =	0.23701	in^4
Polar Moment of Inertia, $I_p = I_x + I_y$ =	0.95530	in^4
$F_{w\ all}$= $[(0.6)F_{exx}/\Omega_{weld}]*(1+0.5\sin^{1.5}(\Theta))$ =	31500	psi
$M_{all} = (F_{w\ all})(I_p)/c$ =	12013	in-lbs
Total Connector Moment, $M = M_{lat}+M_{grav}$ =	4200	in-lbs
M / M_{all} =	0.350	< 1.0 O.K.
Interior Bend Radius =	0.125	in
Fillet Weld leg width =	0.125	in
Weld throat width, w_w =	0.08839	in
Ω_{weld} =	2.00	
F_{exx} =	70	ksi
	2.73	in <--- distance to bottom of L_3

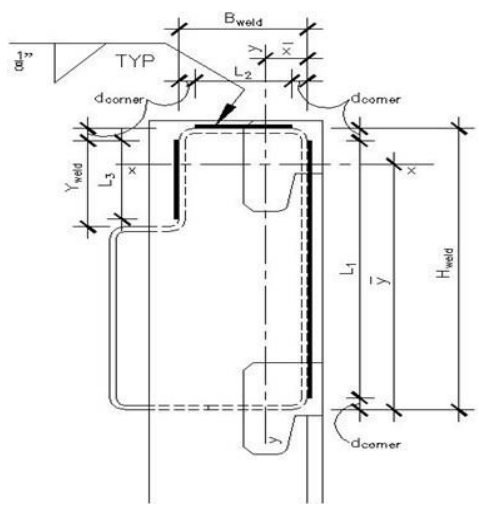

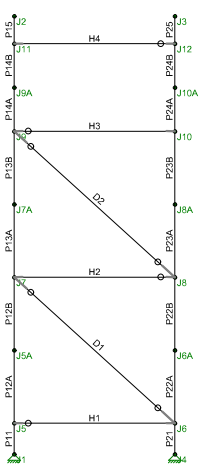

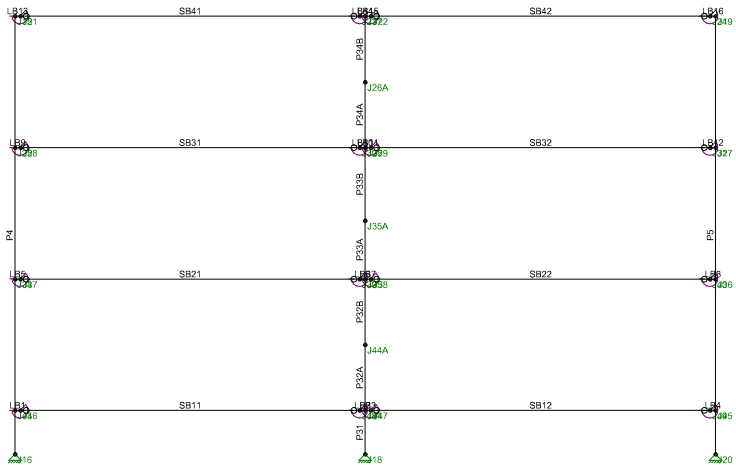

Envelope Only Solution

Johnston Burkholder Asso...	44W x 120H - B Frame	SK - 1
KSH		Apr 17, 2024 at 2:54 PM
2401802403		44W x 120H - B Frame (5000lbs (4...

Joint Coordinates and Temperatures

	Label	X [in]	Y [in]	Temp [F]
1	J1	0	0	0
2	J2	0	120	0
3	J3	44	120	0
4	J4	44	0	0
5	J5	0	8.5	0
6	J5A	0	28.5	0
7	J6	44	8.5	0
8	J6A	44	28.5	0
9	J7	0	48.5	0
10	J7A	0	68.5	0
11	J8	44	48.5	0
12	J8A	44	68.5	0
13	J9	0	88.5	0
14	J10	44	88.5	0
15	J11	0	112.5	0
16	J12	44	112.5	0
17	J15	104	120	0
18	J16	104	0	0
19	J17	200	120	0
20	J18	200	0	0
21	J19	296	120	0
22	J20	296	0	0
23	J21	105.5	120	0
24	J22	201.5	120	0
25	J23	198.5	120	0
26	J24	294.5	120	0
27	J25	104	84	0
28	J26	200	84	0
29	J26A	200	102	0
30	J27	296	84	0
31	J28	105.5	84	0
32	J29	201.5	84	0
33	J30	198.5	84	0
34	J31	294.5	84	0
35	J34	104	48	0
36	J35	200	48	0
37	J35A	200	64	0
38	J36	296	48	0
39	J37	105.5	48	0
40	J38	201.5	48	0
41	J39	198.5	48	0
42	J40	294.5	48	0
43	J43	104	12	0
44	J44	200	12	0
45	J44A	200	30	0
46	J45	296	12	0
47	J46	105.5	12	0
48	J47	201.5	12	0
49	J48	198.5	12	0
50	J49	294.5	12	0
51	J9A	0	100.5	0
52	J10A	44	100.5	0

Joint Boundary Conditions

	Joint Label	X [k/in]	Y [k/in]	Rotation[k-ft/rad]
1	J1	Reaction	Reaction	
2	J4	Reaction	Reaction	
3	J16	Reaction	Reaction	
4	J18	Reaction	Reaction	
5	J20	Reaction	Reaction	
6	J21			S71.96
7	J22			S71.96
8	J23			S71.96
9	J24			S71.96
10	J28			S71.96
11	J29			S71.96
12	J30			S71.96
13	J31			S71.96
14	J37			S71.96
15	J38			S71.96
16	J39			S71.96
17	J40			S71.96
18	J46			S71.96
19	J47			S71.96
20	J48			S71.96
21	J49			S71.96

Member Primary Data

	Label	I Joint	J Joint	Rotate(deg)	Section/Shape	Type	Design List	Material	Design Rules
1	SB42	J24	J22		FBts	Beam	Tube	A570 Gr. 55	Typical
2	SB41	J23	J21		FBts	Beam	Tube	A570 Gr. 55	Typical
3	SB32	J31	J29		FBts	Beam	Tube	A570 Gr. 55	Typical
4	SB31	J30	J28		FBts	Beam	Tube	A570 Gr. 55	Typical
5	SB22	J40	J38		FBts	Beam	Tube	A570 Gr. 55	Typical
6	SB21	J39	J37		FBts	Beam	Tube	A570 Gr. 55	Typical
7	SB12	J49	J47		FBts	Beam	Tube	A570 Gr. 55	Typical
8	SB11	J48	J46		FBts	Beam	Tube	A570 Gr. 55	Typical
9	P34B	J26A	J17	180	UC	Column	HU	A570_Gr55	Typical
10	P34A	J26	J26A	180	UC	Column	HU	A570_Gr55	Typical
11	P33B	J35A	J26	180	UC	Column	HU	A570_Gr55	Typical
12	P33A	J35	J35A	180	UC	Column	HU	A570_Gr55	Typical
13	P32B	J44A	J35	180	UC	Column	HU	A570_Gr55	Typical
14	P32A	J44	J44A	180	UC	Column	HU	A570_Gr55	Typical
15	P31	J18	J44	180	UC	Column	HU	A570_Gr55	Typical
16	P25	J12	J3	270	UC	Column	HU	A570_Gr55	Typical
17	P24B	J10A	J12	270	UC	Column	HU	A570_Gr55	Typical
18	P24A	J10	J10A	270	UC	Column	HU	A570_Gr55	Typical
19	P23B	J8A	J10	270	UC	Column	HU	A570_Gr55	Typical
20	P23A	J8	J8A	270	UC	Column	HU	A570_Gr55	Typical
21	P22B	J6A	J8	270	UC	Column	HU	A570_Gr55	Typical
22	P22A	J6	J6A	270	UC	Column	HU	A570_Gr55	Typical
23	P21	J4	J6	270	UC	Column	HU	A570_Gr55	Typical
24	P15	J11	J2	90	UC	Column	HU	A570_Gr55	Typical
25	P14B	J9A	J11	90	UC	Column	HU	A570_Gr55	Typical
26	P14A	J9	J9A	90	UC	Column	HU	A570_Gr55	Typical
27	P13B	J7A	J9	90	UC	Column	HU	A570_Gr55	Typical
28	P13A	J7	J7A	90	UC	Column	HU	A570_Gr55	Typical
29	P12B	J5A	J7	90	UC	Column	HU	A570_Gr55	Typical
30	P12A	J5	J5A	90	UC	Column	HU	A570_Gr55	Typical

Member Primary Data (Continued)

	Label	I Joint	J Joint	Rotate(deg)	Section/Shape	Type	Design List	Material	Design Rules
31	P11	J1	J5	90	UC	Column	HU	A570_Gr55	Typical
32	P5	J19	J20	180	UC	Column	HU	A570_Gr55	Typical
33	P4	J15	J16	180	UC	Column	HU	A570_Gr55	Typical
34	LB16	J19	J24		RIGID	None	None	RIGID	Typical
35	LB15	J22	J17		RIGID	None	None	RIGID	Typical
36	LB14	J17	J23		RIGID	None	None	RIGID	Typical
37	LB13	J21	J15		RIGID	None	None	RIGID	Typical
38	LB12	J27	J31		RIGID	None	None	RIGID	Typical
39	LB11	J29	J26		RIGID	None	None	RIGID	Typical
40	LB10	J26	J30		RIGID	None	None	RIGID	Typical
41	LB9	J28	J25		RIGID	None	None	RIGID	Typical
42	LB8	J36	J40		RIGID	None	None	RIGID	Typical
43	LB7	J38	J35		RIGID	None	None	RIGID	Typical
44	LB6	J35	J39		RIGID	None	None	RIGID	Typical
45	LB5	J37	J34		RIGID	None	None	RIGID	Typical
46	LB4	J45	J49		RIGID	None	None	RIGID	Typical
47	LB3	J47	J44		RIGID	None	None	RIGID	Typical
48	LB2	J44	J48		RIGID	None	None	RIGID	Typical
49	LB1	J46	J43		RIGID	None	None	RIGID	Typical
50	H4	J11	J12	90	UWh	Beam	CS	A570_Gr55	Typical
51	H3	J9	J10	90	UWh	Beam	CS	A570_Gr55	Typical
52	H2	J7	J8	90	UWh	Beam	CS	A570_Gr55	Typical
53	H1	J5	J6	90	UWh	Beam	CS	A570_Gr55	Typical
54	D2	J8	J9	270	UWd	VBrace	CS	A570_Gr55	Typical
55	D1	J6	J7	270	UWd	VBrace	CS	A570_Gr55	Typical

Member Advanced Data

	Label	I Release	J Release	I Offset[in]	J Offset[in]	T/C Only	Physical	Defl Rati...	TOM	Inactive
1	SB42	PIN	PIN				Yes		Yes	
2	SB41	PIN	PIN				Yes		Yes	
3	SB32	PIN	PIN				Yes		Yes	
4	SB31	PIN	PIN				Yes		Yes	Exclude
5	SB22	PIN	PIN				Yes		Yes	
6	SB21	PIN	PIN				Yes		Yes	Exclude
7	SB12	PIN	PIN				Yes		Yes	
8	SB11	PIN	PIN				Yes		Yes	Exclude
9	P34B						Yes	** NA **	Yes	
10	P34A						Yes	** NA **	Yes	
11	P33B						Yes	** NA **	Yes	
12	P33A						Yes	** NA **	Yes	
13	P32B						Yes	** NA **	Yes	
14	P32A						Yes	** NA **	Yes	
15	P31						Yes	** NA **	Yes	
16	P25						Yes	** NA **	Yes	
17	P24B						Yes	** NA **		
18	P24A						Yes	** NA **	Yes	
19	P23B						Yes	** NA **	Yes	
20	P23A						Yes	** NA **	Yes	
21	P22B						Yes	** NA **	Yes	
22	P22A						Yes	** NA **	Yes	
23	P21						Yes	** NA **	Yes	
24	P15						Yes	** NA **	Yes	
25	P14B						Yes	** NA **		
26	P14A						Yes	** NA **	Yes	
27	P13B						Yes	** NA **	Yes	

Member Advanced Data (Continued)

	Label	I Release	J Release	I Offset[in]	J Offset[in]	T/C Only	Physical	Defl Rati...	TOM	Inactive
28	P13A						Yes	** NA **	Yes	
29	P12B						Yes	** NA **	Yes	
30	P12A						Yes	** NA **	Yes	
31	P11						Yes	** NA **	Yes	
32	P5						Yes	** NA **	Yes	Exclude
33	P4						Yes	** NA **	Yes	Exclude
34	LB16						Yes	** NA **		Exclude
35	LB15						Yes	** NA **		Exclude
36	LB14						Yes	** NA **		Exclude
37	LB13						Yes	** NA **		Exclude
38	LB12						Yes	** NA **		Exclude
39	LB11						Yes	** NA **		Exclude
40	LB10						Yes	** NA **		Exclude
41	LB9						Yes	** NA **		Exclude
42	LB8						Yes	** NA **		Exclude
43	LB7						Yes	** NA **		Exclude
44	LB6						Yes	** NA **		Exclude
45	LB5						Yes	** NA **		Exclude
46	LB4						Yes	** NA **		Exclude
47	LB3						Yes	** NA **		Exclude
48	LB2						Yes	** NA **		Exclude
49	LB1						Yes	** NA **		Exclude
50	H4		PIN	2.25	2.25		Yes		Yes	
51	H3	PIN		2.25	2.25		Yes		Yes	
52	H2		PIN	2.25	2.25		Yes		Yes	
53	H1	PIN		2.25	2.25		Yes		Yes	
54	D2	PIN	PIN	4.625	4.625		Yes	** NA **	Yes	
55	D1	PIN	PIN	4.625	4.625		Yes	** NA **	Yes	

Cold Formed Steel Design Parameters

	Label	Shape	Length...	Lb-out[in]	Lb-in[in]	Lcomp to...	Lcom...	L-tor...	K-out	K-in	Cm	Cb	R	a[in]	Out s...	In sw...
1	P34B	UC	18	22	31.5	31.5	31.5		1	1						Yes
2	P34A	UC	18	22	31.5	31.5	31.5		1	1						Yes
3	P33B	UC	20	35	31.5	31.5	31.5		1	1						Yes
4	P33A	UC	16	35	31.5	31.5	31.5		1	1						Yes
5	P32B	UC	18	35	31.5	31.5	31.5		1	1						Yes
6	P32A	UC	18	35	31.5	31.5	31.5		1	1						Yes
7	P31	UC	12	7.5	7.5	7.5	7.5		1	1					Yes	Yes
8	P25	UC	7.5	7.5	7.5	7.5	7.5		1	1					Yes	Yes
9	P24B	UC	12	31.5	22	22	22		1	1					Yes	Yes
10	P24A	UC	12	31.5	22	22	22		1	1					Yes	Yes
11	P23B	UC	20	31.5	35	35	35		1	1					Yes	
12	P23A	UC	20	31.5	35	35	35		1	1					Yes	
13	P22B	UC	20	31.5	35	35	35		1	1					Yes	
14	P22A	UC	20	31.5	35	35	35		1	1					Yes	
15	P21	UC	8.5	7.5	7.5	7.5	7.5		1	1					Yes	Yes
16	P15	UC	7.5	7.5	7.5	7.5	7.5		1	1					Yes	Yes
17	P14B	UC	12	31.5	22	22	22		1	1					Yes	Yes
18	P14A	UC	12	31.5	22	22	22		1	1					Yes	Yes
19	P13B	UC	20	31.5	35	35	35		1	1					Yes	
20	P13A	UC	20	31.5	35	35	35		1	1					Yes	
21	P12B	UC	20	31.5	35	35	35		1	1					Yes	
22	P12A	UC	20	31.5	35	35	35		1	1					Yes	
23	P11	UC	8.5	7.5	7.5	7.5	7.5		1	1					Yes	Yes
24	P5	UC	120	40	36	36	36									

Cold Formed Steel Design Parameters (Continued)

	Label	Shape	Length...	Lb-out[in]	Lb-in[in]	Lcomp to...	Lcom...	L-tor...	K-out	K-in	Cm	Cb	R	a[in]	Out s...	In sw...
25	P4	UC	120	40	36	36	36									
26	H4	UWh	44			Lb out										
27	H3	UWh	44			Lb out										
28	H2	UWh	44			Lb out										
29	H1	UWh	44			Lb out										
30	D2	UWd	59.464			Lb out										
31	D1	UWd	59.464			Lb out										

Hot Rolled Steel Design Parameters

	Label	Shape	Length[in]	Lb-out[in]	Lb-in[in]	Lcomp top[in]	Lcomp bot[in]	L-torqu...	K-out	K-in	Cb	Function
1	SB42	FBts	93			Lb out						Lateral
2	SB41	FBts	93			Lb out						Lateral
3	SB32	FBts	93			Lb out						Lateral
4	SB31	FBts	93			Lb out						Lateral
5	SB22	FBts	93			Lb out						Lateral
6	SB21	FBts	93			Lb out						Lateral
7	SB12	FBts	93			Lb out						Lateral
8	SB11	FBts	93			Lb out						Lateral

Member Point Loads (BLC 1 : DL)

	Member Label	Direction	Magnitude[lb,lb-in]	Location[in,%]
1	P15	Y	-27.5	%100
2	P25	Y	-27.5	%100
3	P13B	Y	-27.5	15.5
4	P23B	Y	-27.5	15.5
5	P12B	Y	-27.5	19.5
6	P22B	Y	-27.5	19.5
7	P12A	Y	-27.5	3.5
8	P22A	Y	-27.5	3.5

Member Point Loads (BLC 2 : #1/ #2 / #5 - PL)

	Member Label	Direction	Magnitude[lb,lb-in]	Location[in,%]
1	P15	Y	-1650	%100
2	P25	Y	-1650	%100
3	P13B	Y	-1650	15.5
4	P23B	Y	-1650	15.5
5	P12B	Y	-1650	19.5
6	P22B	Y	-1650	19.5
7	P12A	Y	-1650	3.5
8	P22A	Y	-1650	3.5

Member Point Loads (BLC 3 : #6a - (0.67)PL)

	Member Label	Direction	Magnitude[lb,lb-in]	Location[in,%]
1	P15	Y	-1105.5	%100
2	P25	Y	-1105.5	%100
3	P13B	Y	-1105.5	15.5
4	P23B	Y	-1105.5	15.5
5	P12B	Y	-1105.5	19.5
6	P22B	Y	-1105.5	19.5
7	P12A	Y	-1105.5	3.5
8	P22A	Y	-1105.5	3.5

Member Point Loads (BLC 4 : #6a - (0.67)PL - horiz - Trans)

	Member Label	Direction	Magnitude[lb,lb-in]	Location[in,%]
1	P15	X	268	%100
2	P25	X	268	%100
3	P13B	X	189.9	15.5
4	P23B	X	189.9	15.5
5	P12B	X	122.8	19.5
6	P22B	X	122.8	19.5
7	P12A	X	55.8	3.5
8	P22A	X	55.8	3.5

Member Point Loads (BLC 5 : #6b - (1)PL - horiz - Trans)

	Member Label	Direction	Magnitude[lb,lb-in]	Location[in,%]
1	P15	X	250.6	%100
2	P25	X	250.6	%100

Member Point Loads (BLC 6 : #5 - (1)PL - horiz - Trans)

	Member Label	Direction	Magnitude[lb,lb-in]	Location[in,%]
1	P15	X	400	%100
2	P25	X	400	%100
3	P13B	X	283.4	15.5
4	P23B	X	283.4	15.5
5	P12B	X	183.4	19.5
6	P22B	X	183.4	19.5
7	P12A	X	83.3	3.5
8	P22A	X	83.3	3.5

Member Point Loads (BLC 7 : #6b - (1)PL)

	Member Label	Direction	Magnitude[lb,lb-in]	Location[in,%]
1	P15	Y	-1650	%100
2	P25	Y	-1650	%100

Member Distributed Loads (BLC 1 : DL)

	Member Label	Direction	Start Magnitude[lb/ft,F,ksf]	End Magnitude[lb...	Start Location[in,%]	End Location[in,%]
1	SB41	Y	-3.54	-3.54	0	0
2	SB42	Y	-3.54	-3.54	0	0
3	SB31	Y	-3.54	-3.54	0	0
4	SB32	Y	-3.54	-3.54	0	0
5	SB21	Y	-3.54	-3.54	0	0
6	SB22	Y	-3.54	-3.54	0	0
7	SB11	Y	-3.54	-3.54	0	0
8	SB12	Y	-3.54	-3.54	0	0

Member Distributed Loads (BLC 2 : #1/ #2 / #5 - PL)

	Member Label	Direction	Start Magnitude[lb/ft,F,ksf]	End Magnitude[lb...	Start Location[in,%]	End Location[in,%]
1	SB41	Y	-212.903	-212.903	0	0
2	SB42	Y	-212.903	-212.903	0	0
3	SB31	Y	-212.903	-212.903	0	0
4	SB32	Y	-212.903	-212.903	0	0
5	SB21	Y	-212.903	-212.903	0	0
6	SB22	Y	-212.903	-212.903	0	0
7	SB11	Y	-212.903	-212.903	0	0
8	SB12	Y	-212.903	-212.903	0	0

Member Distributed Loads (BLC 3 : #6a - (0.67)PL)

	Member Label	Direction	Start Magnitude[lb/ft,F,ksf]	End Magnitude[lb...	Start Location[in,%]	End Location[in,%]
1	SB41	Y	-142.645	-142.645	0	0
2	SB42	Y	-142.645	-142.645	0	0
3	SB31	Y	-142.645	-142.645	0	0
4	SB32	Y	-142.645	-142.645	0	0
5	SB21	Y	-142.645	-142.645	0	0
6	SB22	Y	-142.645	-142.645	0	0
7	SB11	Y	-142.645	-142.645	0	0
8	SB12	Y	-142.645	-142.645	0	0

Member Distributed Loads (BLC 7 : #6b - (1)PL)

	Member Label	Direction	Start Magnitude[lb/ft,F,ksf]	End Magnitude[lb...	Start Location[in,%]	End Location[in,%]
1	SB41	Y	-212.903	-212.903	0	0
2	SB42	Y	-212.903	-212.903	0	0

Member Distributed Loads (BLC 8 : #6a - (0.67)PL - horiz - Long)

	Member Label	Direction	Start Magnitude[lb/ft,F,ksf]	End Magnitude[lb...	Start Location[in,%]	End Location[in,%]
1	SB41	X	6.274	6.274	0	0
2	SB42	X	6.274	6.274	0	0
3	SB31	X	4.444	4.444	0	0
4	SB32	X	4.444	4.444	0	0
5	SB21	X	2.876	2.876	0	0
6	SB22	X	2.876	2.876	0	0
7	SB11	X	1.307	1.307	0	0
8	SB12	X	1.307	1.307	0	0

Member Distributed Loads (BLC 9 : #6b - (1)PL - horiz - Long)

	Member Label	Direction	Start Magnitude[lb/ft,F,ksf]	End Magnitude[lb...	Start Location[in,%]	End Location[in,%]
1	SB41	X	5.865	5.865	0	0
2	SB42	X	5.865	5.865	0	0

Member Distributed Loads (BLC 10 : #5 - (1)PL - horiz - Long)

	Member Label	Direction	Start Magnitude[lb/ft,F,ksf]	End Magnitude[lb...	Start Location[in,%]	End Location[in,%]
1	SB41	X	9.364	9.364	0	0
2	SB42	X	9.364	9.364	0	0
3	SB31	X	6.633	6.633	0	0
4	SB32	X	6.633	6.633	0	0
5	SB21	X	4.292	4.292	0	0
6	SB22	X	4.292	4.292	0	0
7	SB11	X	1.951	1.951	0	0
8	SB12	X	1.951	1.951	0	0

Joint Loads and Enforced Displacements (BLC 11 : Notional (+Xg) Lat All Shlvs)

	Joint Label	L,D,M	Direction	Magnitude[(lb,lb-in), (in,rad), (lb*s^...
1	J2	L	X	10.4
2	J3	L	X	10.4
3	J17	L	X	10.4
4	J26	L	X	7.1
5	J35	L	X	7.1
6	J44	L	X	7.1

Basic Load Cases

	BLC Description	Category	X Gravity	Y Gravity	Joint	Point	Distributed
1	DL	DL		-1		8	8
2	#1/ #2 / #5 - PL	LL				8	8
3	#6a - (0.67)PL	LL				8	8
4	#6a - (0.67)PL - horiz - Trans	EL	.187			8	
5	#6b - (1)PL - horiz - Trans	EL	.187			2	
6	#5 - (1)PL - horiz - Trans	EL	.187			8	
7	#6b - (1)PL	LL				2	2
8	#6a - (0.67)PL - horiz - Long	EL	.047				8
9	#6b - (1)PL - horiz - Long	EL	.047				2
10	#5 - (1)PL - horiz - Long	EL	.047				8
11	Notional (+Xg) Lat All Shlvs	NLX	.004		6		

Load Combinations

	Description	So...	P...	S...	BLC	Fac..	BLC	Fac..	BLC	Fac..	BLC	Fac..	BLC	Fac..	BLC	Fac..	BLC	Fac..	BLC	Fac..	BLC	Fac..	BLC	Fac...
1	RMI - LC #1	Yes	Y		1	1.4	2	1.2	11	1														
2	RMI - LC #2	Yes	Y		1	1.2	2	1.4	11	1														
3	RMI - LC #6a - Trans	Yes	Y		1	.71	3	.71	4	1														
4	RMI - LC #6a - Long	Yes	Y		1	.71	3	.71	8	1														
5	RMI - LC #6b - Trans	Yes	Y		1	.71	7	.71	5	1														
6	RMI - LC #6b - Long	Yes	Y		1	.71	7	.71	9	1														
7	RMI - LC #5 - Trans	Yes	Y		1	1.39	2	1.04	6	1														
8	RMI - LC #5 - Long	Yes	Y		1	1.39	2	1.04	10	1														
9	RMI - LC #6a - Long-C...	Yes	Y		8	.7																		
10	RMI - LC #6b - Long-C...	Yes	Y		9	.7																		
11	RMI - LC #5 - Long-Co...	Yes	Y		10	.7																		

Envelope Joint Reactions

	Joint		X [lb]	LC	Y [lb]	LC	Moment [lb-in]	LC
1	J46	max	0	11	0	11	4376.016	8
2		min	0	1	0	1	328.047	5
3	J40	max	0	11	0	11	2695.621	8
4		min	0	1	0	1	297.766	5
5	J47	max	0	11	0	11	2592.183	8
6		min	0	1	0	1	212.907	1
7	J48	max	0	11	0	11	2592.183	8
8		min	0	1	0	1	212.907	1
9	J37	max	0	11	0	11	2489.158	8
10		min	0	1	0	1	68.195	2
11	J38	max	0	11	0	11	2397.666	8
12		min	0	1	0	1	186.815	1
13	J39	max	0	11	0	11	2397.666	8
14		min	0	1	0	1	186.815	1
15	J28	max	0	11	0	11	2058.873	8
16		min	0	1	0	1	219.741	3
17	J31	max	0	11	0	11	1866.746	8
18		min	0	1	0	1	-76.656	5
19	J29	max	0	11	0	11	1839.545	8
20		min	0	1	0	1	138.028	1
21	J30	max	0	11	0	11	1839.545	8
22		min	0	1	0	1	138.028	1
23	J49	max	0	11	0	11	1740.34	11
24		min	0	1	0	1	-1904.487	2
25	J21	max	0	11	0	11	1590.587	8

Envelope Joint Reactions (Continued)

	Joint		X [lb]	LC	Y [lb]	LC	Moment [lb-in]	LC
26		min	0	1	0	1	225.871	3
27	J22	max	0	11	0	11	1156.655	8
28		min	0	1	0	1	85.865	1
29	J23	max	0	11	0	11	1156.655	8
30		min	0	1	0	1	85.865	1
31	J24	max	0	11	0	11	1090.289	8
32		min	0	1	0	1	-663.221	5
33	J1	max	-1.045	11	9361.78	2	0	11
34		min	-908.673	7	-133.897	5	0	1
35	J4	max	.177	8	10888.013	7	0	11
36		min	-1004.481	7	3.074	9	0	1
37	J16	max	-16.722	10	4769.962	2	0	11
38		min	-607.222	2	.873	10	0	1
39	J18	max	-16.328	2	9512.772	2	0	11
40		min	-183.245	8	0	10	0	1
41	J20	max	590.94	2	4769.951	2	0	11
42		min	-60.455	11	-3.093	11	0	1
43	Totals:	max	-53.7	2	37879.816	2		
44		min	-1961.215	7	0	10		

Envelope Joint Displacements

	Joint		X [in]	LC	Y [in]	LC	Rotation [rad]	LC
1	J1	max	0	11	0	11	2.848e-04	8
2		min	0	1	0	1	-1.123e-02	7
3	J2	max	.799	7	0	11	7.432e-05	8
4		min	-.022	8	-.031	2	-2.37e-02	7
5	J3	max	.79	7	0	11	8.727e-05	8
6		min	-.022	8	-.032	2	-2.408e-02	7
7	J4	max	0	11	0	11	3.094e-04	8
8		min	0	1	0	1	-1.253e-02	7
9	J5	max	.091	7	0	5	2.883e-04	8
10		min	-.002	8	-.004	2	-8.898e-03	7
11	J5A	max	.171	7	0	5	3.428e-04	2
12		min	-.009	2	-.012	2	-1.736e-04	5
13	J6	max	.101	7	0	11	3.035e-04	8
14		min	-.003	8	-.005	7	-9.723e-03	7
15	J6A	max	.187	7	0	11	3.207e-04	2
16		min	-.008	2	-.012	7	-1.565e-04	5
17	J7	max	.122	7	0	5	3.928e-03	7
18		min	-.015	2	-.019	2	2.455e-06	9
19	J7A	max	.065	7	0	5	4.978e-04	5
20		min	-.021	2	-.023	2	-6.984e-07	9
21	J8	max	.135	7	0	11	3.738e-03	7
22		min	-.015	2	-.019	7	2.032e-06	9
23	J8A	max	.083	7	0	11	3.62e-04	5
24		min	-.021	2	-.024	2	-4.828e-07	9
25	J9	max	.164	7	0	11	1.158e-04	8
26		min	-.023	2	-.028	2	-1.176e-02	7
27	J10	max	.173	7	0	11	1.179e-04	8
28		min	-.023	2	-.028	2	-1.056e-02	7
29	J11	max	.622	7	0	11	7.411e-05	8
30		min	-.021	8	-.03	2	-2.285e-02	7
31	J12	max	.61	7	0	11	8.702e-05	8
32		min	-.021	8	-.031	2	-2.323e-02	7
33	J15	max	.381	8	0	10	-2.616e-04	3

Envelope Joint Displacements (Continued)

	Joint		X [in]	LC	Y [in]	LC	Rotation [rad]	LC
34		min	.051	3	-.016	2	-1.842e-03	8
35	J16	max	0	11	0	11	-4.228e-04	5
36		min	0	1	0	1	-6.21e-03	8
37	J17	max	.342	8	0	11	-9.944e-05	1
38		min	.027	1	-.032	2	-1.339e-03	8
39	J18	max	0	11	0	11	-2.844e-04	1
40		min	0	1	0	1	-3.423e-03	8
41	J19	max	.303	8	0	11	7.68e-04	5
42		min	-.025	2	-.016	2	-1.263e-03	8
43	J20	max	0	11	0	11	3.438e-03	2
44		min	0	1	0	1	-2.138e-03	11
45	J21	max	.381	8	0	10	-2.616e-04	3
46		min	.051	3	-.017	2	-1.842e-03	8
47	J22	max	.342	8	0	10	-9.944e-05	1
48		min	.027	1	-.032	2	-1.339e-03	8
49	J23	max	.342	8	.001	11	-9.944e-05	1
50		min	.027	1	-.032	2	-1.339e-03	8
51	J24	max	.303	8	.002	11	7.68e-04	5
52		min	-.025	2	-.016	2	-1.263e-03	8
53	J25	max	.307	8	0	10	-2.545e-04	3
54		min	.028	5	-.014	2	-2.384e-03	8
55	J26	max	.269	8	0	11	-1.598e-04	1
56		min	.021	1	-.028	2	-2.13e-03	8
57	J26A	max	.309	8	0	11	-1.582e-04	1
58		min	.024	1	-.03	2	-2.124e-03	8
59	J27	max	.23	8	0	11	8.877e-05	5
60		min	-.029	2	-.014	2	-2.162e-03	8
61	J28	max	.307	8	0	10	-2.545e-04	3
62		min	.028	5	-.014	2	-2.384e-03	8
63	J29	max	.269	8	0	10	-1.598e-04	1
64		min	.021	1	-.028	2	-2.13e-03	8
65	J30	max	.269	8	.002	11	-1.598e-04	1
66		min	.021	1	-.027	2	-2.13e-03	8
67	J31	max	.23	8	.002	11	8.877e-05	5
68		min	-.029	2	-.014	2	-2.162e-03	8
69	J34	max	.205	8	0	10	-7.897e-05	2
70		min	.017	5	-.009	2	-2.883e-03	8
71	J35	max	.165	8	0	11	-2.163e-04	1
72		min	.013	1	-.019	2	-2.777e-03	8
73	J35A	max	.214	8	0	11	-2.332e-04	1
74		min	.017	1	-.023	2	-3.063e-03	8
75	J36	max	.124	8	0	11	-3.448e-04	5
76		min	-.04	2	-.009	2	-3.122e-03	8
77	J37	max	.205	8	-.001	10	-7.897e-05	2
78		min	.017	5	-.011	8	-2.883e-03	8
79	J38	max	.165	8	0	10	-2.163e-04	1
80		min	.013	1	-.019	2	-2.777e-03	8
81	J39	max	.165	8	.003	11	-2.163e-04	1
82		min	.013	1	-.018	2	-2.777e-03	8
83	J40	max	.124	8	.003	11	-3.448e-04	5
84		min	-.04	2	-.009	2	-3.122e-03	8
85	J43	max	.073	8	0	10	-3.799e-04	5
86		min	.005	5	-.003	2	-5.068e-03	8
87	J44	max	.04	8	0	11	-2.466e-04	1
88		min	.003	1	-.006	2	-3.002e-03	8
89	J44A	max	.104	8	0	11	-2.903e-04	1
90		min	.008	1	-.012	2	-3.63e-03	8

Envelope Joint Displacements (Continued)

	Joint		X [in]	LC	Y [in]	LC	Rotation [rad]	LC
91	J45	max	.025	11	0	11	2.205e-03	2
92		min	-.039	2	-.003	2	-2.015e-03	11
93	J46	max	.073	8	0	5	-3.799e-04	5
94		min	.005	5	-.01	8	-5.068e-03	8
95	J47	max	.04	8	0	10	-2.466e-04	1
96		min	.003	1	-.009	8	-3.002e-03	8
97	J48	max	.04	8	.003	11	-2.466e-04	1
98		min	.003	1	-.005	2	-3.002e-03	8
99	J49	max	.025	11	.003	11	2.205e-03	2
100		min	-.039	2	-.006	2	-2.015e-03	11
101	J9A	max	.36	7	0	11	1.024e-04	8
102		min	-.02	8	-.029	2	-1.978e-02	7
103	J10A	max	.354	7	0	11	9.424e-05	8
104		min	-.02	8	-.029	2	-1.869e-02	7

Envelope Maximum Member Section Forces

	Member		Axial[lb]	Loc[in]	LC	Shear[lb]	Loc[in]	LC	Moment[lb-in]	Loc[in]	LC
1	SB42	max	83.853	0	8	1185.684	93	2	27729.207	46.5	2
2		min	-48.326	93	6	-1185.679	0	2	-112.357	93	6
3	SB41	max	91.381	0	8	1185.685	93	2	27718.607	46.5	2
4		min	-49.037	93	6	-1185.68	0	2	-114.011	93	6
5	SB32	max	55.845	0	5	1185.684	93	2	27462.898	46.5	2
6		min	-53.358	93	8	-1185.679	0	2	-124.058	93	8
7	SB22	max	229.878	0	2	1185.684	93	2	28101.45	46.5	2
8		min	-29.575	93	5	-1185.679	0	2	-68.761	93	5
9	SB12	max	-7.638	0	5	1185.684	93	2	25600.279	46.5	2
10		min	-845.994	93	2	-1185.679	0	2	-1966.935	93	2
11	P34B	max	2375.458	0	2	84.825	0	8	-59.788	0	1
12		min	821.208	18	3	5.859	18	3	-2307.579	18	8
13	P34A	max	2379.55	0	2	85.705	0	8	759.08	0	8
14		min	823.629	18	3	6.287	18	1	-782.171	18	8
15	P33B	max	4755.435	0	2	126.54	0	8	34.127	0	6
16		min	1248.951	20	5	9.244	20	1	-2916.307	20	8
17	P33A	max	4759.072	0	2	127.707	0	8	1654.889	0	8
18		min	1251.641	16	5	9.364	16	1	-387.281	16	8
19	P32B	max	7134.572	0	2	161.822	0	8	23.768	0	6
20		min	1290.099	18	5	12.818	18	1	-3136.403	18	8
21	P32A	max	7138.663	0	2	162.61	0	8	2700.502	0	8
22		min	1292.52	18	5	12.928	18	1	-225.043	18	8
23	P31	max	9512.772	0	2	207.438	0	8	0	0	1
24		min	1331.249	12	5	18.641	12	1	-2488.617	12	8
25	P25	max	2344.705	0	2	442.264	0	7	3315.984	0	7
26		min	804.43	7.5	3	-.153	7.5	8	-.898	0	8
27	P24B	max	2350.18	0	2	369.712	0	7	7749.98	0	7
28		min	806.25	12	4	.868	12	6	-.898	12	8
29	P24A	max	2352.908	0	2	358.635	0	7	12051.054	0	7
30		min	807.864	12	4	.964	12	6	11.071	12	6
31	P23B	max	4703.402	0	2	.858	0	8	11308.545	20	7
32		min	811.031	20	4	-522.415	20	7	5.998	0	6
33	P23A	max	4707.948	0	2	.758	0	8	5260.035	20	7
34		min	1219.853	20	6	-259.948	20	7	-1007.289	0	5
35	P22B	max	7132.266	0	7	1.101	0	8	41.023	20	7
36		min	1227.194	20	6	-440.619	20	7	-5187.963	0	7
37	P22A	max	9440.327	0	2	.728	0	6	47.463	0	8
38		min	1249.409	20	6	-205.978	20	7	-9008.889	0	7

Envelope Maximum Member Section Forces (Continued)

	Member		Axial[lb]	Loc[in]	LC	Shear[lb]	Loc[in]	LC	Moment[lb-in]	Loc[in]	LC
39	P21	max	10888.013	0	7	1134.398	0	7	20.33	8.5	8
40		min	1277.108	8.5	6	-2.43	8.5	8	-9641.1	8.5	7
41	P15	max	2344.705	0	2	441.596	0	7	3310.972	0	7
42		min	804.43	7.5	3	-.13	7.5	8	-.727	0	8
43	P14B	max	2349.053	0	2	508.466	0	7	6784.214	0	7
44		min	768.584	12	3	-1.59	12	8	13.838	0	6
45	P14A	max	2351.781	0	2	499.494	0	7	12775.587	0	7
46		min	770.198	12	3	-1.52	12	8	7.703	0	8
47	P13B	max	4669.996	0	2	-.45	0	4	12802.728	20	7
48		min	-389.518	20	3	-574.983	20	7	.801	0	6
49	P13A	max	4674.542	0	2	-.324	0	4	5702.857	20	7
50		min	328.753	20	5	-299.83	20	7	-1221.076	0	5
51	P12B	max	7009.884	0	2	-.781	0	6	90.077	20	8
52		min	-897.135	20	3	-373.033	20	7	-4758.345	0	7
53	P12A	max	9357.43	0	2	-.608	0	6	44.998	20	8
54		min	-153.691	20	5	-177.926	20	7	-8018.229	0	7
55	P11	max	9361.78	0	2	943.472	0	7	0	0	1
56		min	-135.04	8.5	5	1.34	8.5	8	-8018.229	8.5	7
57	H4	max	4.067	39.5	8	3.369	0	8	33.617	0	8
58		min	-68.157	0	7	-62.374	39.5	7	-2474.748	0	7
59	H3	max	1.483	39.5	8	2.233	0	8	1001.329	39.5	7
60		min	-864.255	0	7	-19.227	39.5	7	-19.259	17.281	8
61	H2	max	2.317	39.5	8	3.613	0	8	703.605	39.5	7
62		min	-2090.92	0	7	-16.823	39.5	7	-6.544	28.391	8
63	H1	max	-.586	39.5	6	2.768	0	8	922.004	39.5	7
64		min	-1009.387	0	7	-16.104	39.5	7	-29.762	21.807	8
65	D2	max	2595.455	0	7	2.39	50.214	1	10.003	25.107	1
66		min	-1.573	50.214	8	-2.39	0	1	-20.005	0	1
67	D1	max	2937.18	0	7	2.39	50.214	1	10.003	25.107	1
68		min	-.16	50.214	8	-2.39	0	1	-20.005	0	1

Envelope Member Section Deflections Service

	Member	Sec		x [in]	LC	y [in]	LC	L/y' Ratio	LC
1	SB42	1	max	-.001	2	.016	2	NC	1
2			min	-.323	8	.004	6	NC	1
3		2	max	-.001	2	.251	2	1166.331	3
4			min	-.323	8	.086	4	403.772	2
5		3	max	-.002	2	.347	2	831.812	4
6			min	-.323	8	.12	4	287.794	2
7		4	max	-.002	2	.258	2	1168.562	4
8			min	-.323	8	.09	3	403.772	2
9		5	max	-.002	2	.032	2	NC	1
10			min	-.323	8	.008	5	NC	1
11	SB41	1	max	-.042	3	.032	2	NC	1
12			min	-.361	8	.007	6	NC	1
13		2	max	-.042	3	.258	2	1165.873	3
14			min	-.361	8	.089	4	403.967	2
15		3	max	-.042	3	.347	2	831.082	3
16			min	-.361	8	.12	3	287.926	2
17		4	max	-.042	3	.251	2	1166.88	4
18			min	-.362	8	.087	3	403.967	2
19		5	max	-.042	3	.017	2	NC	1
20			min	-.362	8	.005	5	NC	1
21	SB32	1	max	.003	2	.014	2	NC	1
22			min	-.25	8	.002	6	NC	1

Envelope Member Section Deflections Service (Continued)

	Member	Sec		x [in]	LC	y [in]	LC	L/y' Ratio	LC
23		2	max	.003	2	.245	2	NC	5
24			min	-.25	8	.008	6	408.722	2
25		3	max	.003	2	.34	2	NC	5
26			min	-.25	8	.011	6	291.145	2
27		4	max	.004	2	.252	2	NC	5
28			min	-.25	8	.01	5	408.723	2
29		5	max	.004	2	.028	2	NC	1
30			min	-.25	8	.006	5	NC	1
31	SB22	1	max	.013	2	.009	2	NC	1
32			min	-.145	8	0	6	NC	1
33		2	max	.013	2	.246	2	NC	5
34			min	-.145	8	.004	6	397.049	2
35		3	max	.013	2	.342	2	NC	5
36			min	-.145	8	.006	6	283.236	2
37		4	max	.013	2	.251	2	NC	5
38			min	-.145	8	.006	5	397.05	2
39		5	max	.013	2	.019	2	NC	1
40			min	-.145	8	.004	5	NC	1
41	SB12	1	max	.016	2	.006	2	NC	1
42			min	-.026	8	0	6	NC	1
43		2	max	.017	2	.214	2	NC	5
44			min	-.025	8	.003	6	447.061	2
45		3	max	.018	2	.3	2	NC	5
46			min	-.025	8	.005	6	316.962	2
47		4	max	.019	2	.214	2	NC	5
48			min	-.024	8	.004	5	447.062	2
49		5	max	.02	2	.009	8	NC	1
50			min	-.023	8	.001	5	NC	1
51	P34B	1	max	-.007	6	-.024	1	NC	1
52			min	-.03	2	-.309	8	NC	1
53		2	max	-.007	6	-.025	1	NC	1
54			min	-.03	2	-.318	8	NC	1
55		3	max	-.007	6	-.026	1	NC	1
56			min	-.031	2	-.327	8	NC	1
57		4	max	-.007	6	-.026	1	NC	1
58			min	-.031	2	-.335	8	NC	1
59		5	max	-.008	6	-.027	1	NC	1
60			min	-.032	2	-.342	8	NC	1
61	P34A	1	max	-.005	6	-.021	1	NC	1
62			min	-.028	2	-.269	8	NC	1
63		2	max	-.006	6	-.022	1	NC	1
64			min	-.028	2	-.279	8	2793.031	4
65		3	max	-.006	6	-.023	1	NC	1
66			min	-.029	2	-.289	8	1381.007	4
67		4	max	-.006	6	-.023	1	NC	1
68			min	-.029	2	-.299	8	917.243	4
69		5	max	-.007	6	-.024	1	NC	1
70			min	-.03	2	-.309	8	690.426	4
71	P33B	1	max	-.004	6	-.017	1	NC	1
72			min	-.023	2	-.214	8	NC	1
73		2	max	-.005	6	-.018	1	NC	1
74			min	-.024	2	-.229	8	NC	1
75		3	max	-.005	6	-.019	1	NC	1
76			min	-.025	2	-.244	8	8579.501	8
77		4	max	-.005	6	-.02	1	NC	1
78			min	-.026	2	-.257	8	NC	1
79		5	max	-.005	6	-.021	1	NC	1

Envelope Member Section Deflections Service (Continued)

	Member	Sec		x [in]	LC	y [in]	LC	L/y' Ratio	LC
80			min	-.028	2	-.269	8	NC	1
81	P33A	1	max	-.003	6	-.013	1	NC	1
82			min	-.019	2	-.165	8	NC	1
83		2	max	-.003	6	-.014	1	NC	1
84			min	-.02	2	-.176	8	1372.492	8
85		3	max	-.004	6	-.015	1	8689.141	1
86			min	-.021	2	-.189	8	671.371	8
87		4	max	-.004	6	-.016	1	5722.706	1
88			min	-.022	2	-.201	8	440.867	8
89		5	max	-.004	6	-.017	1	4266.257	1
90			min	-.023	2	-.214	8	327.816	8
91	P32B	1	max	-.002	6	-.008	1	NC	1
92			min	-.012	2	-.104	8	NC	1
93		2	max	-.002	6	-.01	1	NC	1
94			min	-.014	2	-.12	8	NC	1
95		3	max	-.003	6	-.011	1	NC	1
96			min	-.016	2	-.136	8	9369.128	8
97		4	max	-.003	6	-.012	1	NC	1
98			min	-.017	2	-.151	8	NC	1
99		5	max	-.003	6	-.013	1	NC	1
100			min	-.019	2	-.165	8	NC	1
101	P32A	1	max	0	6	-.003	1	NC	1
102			min	-.006	2	-.04	8	NC	1
103		2	max	-.001	6	-.005	1	NC	1
104			min	-.007	2	-.055	8	1239.689	8
105		3	max	-.001	6	-.006	1	7330.594	1
106			min	-.009	2	-.071	8	596.725	8
107		4	max	-.002	6	-.007	1	4769.871	1
108			min	-.011	2	-.087	8	386.959	8
109		5	max	-.002	6	-.008	1	3523.957	1
110			min	-.012	2	-.104	8	285.001	8
111	P31	1	max	0	8	0	1	NC	1
112			min	0	1	0	1	NC	1
113		2	max	0	6	0	1	NC	1
114			min	-.001	2	-.011	8	NC	1
115		3	max	0	6	-.002	1	NC	1
116			min	-.003	2	-.021	8	NC	1
117		4	max	0	6	-.003	1	NC	1
118			min	-.004	2	-.031	8	NC	1
119		5	max	0	6	-.003	1	NC	1
120			min	-.006	2	-.04	8	NC	1
121	P25	1	max	-.007	6	.021	8	NC	1
122			min	-.031	2	-.61	7	NC	1
123		2	max	-.007	6	.021	8	NC	1
124			min	-.031	2	-.654	7	169.8	7
125		3	max	-.007	6	.021	8	NC	1
126			min	-.031	2	-.699	7	84.329	7
127		4	max	-.007	6	.022	8	NC	1
128			min	-.031	2	-.744	7	55.927	7
129		5	max	-.007	6	.022	8	NC	1
130			min	-.032	2	-.79	7	41.79	7
131	P24B	1	max	-.006	6	.02	8	NC	1
132			min	-.029	2	-.354	7	NC	1
133		2	max	-.006	6	.02	8	NC	1
134			min	-.03	2	-.412	7	204.539	7
135		3	max	-.007	6	.021	8	NC	1
136			min	-.03	2	-.475	7	98.826	7

Envelope Member Section Deflections Service (Continued)

	Member	Sec		x [in]	LC	y [in]	LC	L/y' Ratio	LC
137		4	max	-.007	6	.021	8	NC	1
138			min	-.03	2	-.541	7	63.97	7
139		5	max	-.007	6	.021	8	NC	1
140			min	-.031	2	-.61	7	46.788	7
141	P24A	1	max	-.006	6	.023	2	NC	1
142			min	-.028	2	-.173	7	NC	1
143		2	max	-.006	6	.022	2	NC	1
144			min	-.028	2	-.209	7	337.014	7
145		3	max	-.006	6	.021	2	NC	1
146			min	-.029	2	-.251	7	153.905	7
147		4	max	-.006	6	.021	2	NC	1
148			min	-.029	2	-.3	7	94.915	7
149		5	max	-.006	6	.02	8	NC	1
150			min	-.029	2	-.354	7	66.549	7
151	P23B	1	max	-.004	6	.021	2	NC	1
152			min	-.024	2	-.083	7	NC	1
153		2	max	-.005	6	.022	2	NC	1
154			min	-.025	2	-.087	7	5066.405	7
155		3	max	-.005	6	.023	2	NC	1
156			min	-.026	2	-.102	7	1056.6	7
157		4	max	-.005	6	.023	2	NC	1
158			min	-.027	2	-.13	7	425.685	7
159		5	max	-.006	6	.023	2	NC	1
160			min	-.028	2	-.173	7	221.125	7
161	P23A	1	max	-.003	6	.015	2	NC	1
162			min	-.019	7	-.135	7	386.609	7
163		2	max	-.003	6	.017	2	NC	1
164			min	-.02	7	-.116	7	604.62	7
165		3	max	-.004	6	.018	2	NC	1
166			min	-.021	7	-.1	7	1193.36	7
167		4	max	-.004	6	.02	2	NC	1
168			min	-.022	2	-.088	7	4005.549	7
169		5	max	-.004	6	.021	2	NC	1
170			min	-.024	2	-.083	7	NC	1
171	P22B	1	max	-.002	6	.008	2	NC	1
172			min	-.012	7	-.187	7	NC	1
173		2	max	-.002	6	.01	2	NC	1
174			min	-.014	7	-.182	7	2557.386	7
175		3	max	-.002	6	.012	2	NC	4
176			min	-.016	7	-.17	7	2231.311	7
177		4	max	-.003	6	.013	2	NC	4
178			min	-.018	7	-.153	7	3556.137	7
179		5	max	-.003	6	.015	2	NC	3
180			min	-.019	7	-.135	7	2994.085	2
181	P22A	1	max	0	6	.003	8	NC	1
182			min	-.005	7	-.101	7	NC	1
183		2	max	0	6	.004	8	NC	1
184			min	-.007	7	-.142	7	1029.112	7
185		3	max	-.001	6	.005	8	NC	4
186			min	-.008	7	-.169	7	807.728	7
187		4	max	-.002	6	.007	8	NC	4
188			min	-.01	7	-.183	7	1130.171	7
189		5	max	-.002	6	.008	2	NC	3
190			min	-.012	7	-.187	7	3296.093	2
191	P21	1	max	0	8	0	1	NC	1
192			min	0	1	0	1	NC	1
193		2	max	0	6	0	8	NC	1

Envelope Member Section Deflections Service (Continued)

	Member	Sec		x [in]	LC	y [in]	LC	L/y' Ratio	LC
194			min	-.001	7	-.027	7	4566.612	7
195		3	max	0	6	.001	8	NC	4
196			min	-.002	7	-.054	7	2854.155	7
197		4	max	0	6	.002	8	NC	4
198			min	-.004	7	-.079	7	3261.924	7
199		5	max	0	6	.003	8	NC	3
200			min	-.005	7	-.101	7	3699.341	2
201	P15	1	max	-.002	5	.021	8	NC	1
202			min	-.03	2	-.622	7	NC	1
203		2	max	-.002	5	.021	8	NC	1
204			min	-.031	2	-.666	7	172.586	7
205		3	max	-.002	5	.021	8	NC	1
206			min	-.031	2	-.71	7	85.704	7
207		4	max	-.002	5	.022	8	NC	1
208			min	-.031	2	-.754	7	56.834	7
209		5	max	-.002	3	.022	8	NC	1
210			min	-.031	2	-.799	7	42.466	7
211	P14B	1	max	-.001	5	.02	8	NC	1
212			min	-.029	2	-.36	7	NC	1
213		2	max	-.001	5	.02	8	NC	1
214			min	-.029	2	-.421	7	194.353	7
215		3	max	-.001	5	.021	8	NC	1
216			min	-.03	2	-.486	7	94.694	7
217		4	max	-.002	5	.021	8	NC	1
218			min	-.03	2	-.554	7	61.854	7
219		5	max	-.002	5	.021	8	NC	1
220			min	-.03	2	-.622	7	45.689	7
221	P14A	1	max	0	5	.023	2	NC	1
222			min	-.028	2	-.164	7	NC	1
223		2	max	0	5	.022	2	NC	1
224			min	-.028	2	-.203	7	303.795	7
225		3	max	0	5	.021	2	NC	1
226			min	-.028	2	-.25	7	139.627	7
227		4	max	0	5	.02	2	NC	1
228			min	-.029	2	-.302	7	86.701	7
229		5	max	-.001	5	.02	8	NC	1
230			min	-.029	2	-.36	7	61.234	7
231	P13B	1	max	0	5	.021	2	NC	1
232			min	-.023	2	-.065	7	NC	1
233		2	max	0	5	.022	2	NC	1
234			min	-.024	2	-.069	7	5443.792	7
235		3	max	0	5	.023	2	NC	1
236			min	-.025	2	-.085	7	1021.031	7
237		4	max	0	5	.023	2	NC	1
238			min	-.027	2	-.115	7	398.155	7
239		5	max	0	5	.023	2	NC	1
240			min	-.028	2	-.164	7	203.272	7
241	P13A	1	max	0	5	.015	2	NC	1
242			min	-.019	2	-.122	7	350.972	7
243		2	max	0	5	.017	2	NC	1
244			min	-.02	2	-.102	7	539.435	7
245		3	max	0	5	.019	2	NC	1
246			min	-.021	2	-.084	7	1039.755	7
247		4	max	0	5	.02	2	NC	1
248			min	-.022	2	-.071	7	3320.658	7
249		5	max	0	5	.021	2	NC	1
250			min	-.023	2	-.065	7	NC	1

Envelope Member Section Deflections Service (Continued)

	Member	Sec		x [in]	LC	y [in]	LC	L/y' Ratio	LC
251	P12B	1	max	0	5	.009	2	NC	1
252			min	-.012	2	-.171	7	NC	1
253		2	max	0	5	.01	2	NC	1
254			min	-.013	2	-.167	7	2450.028	7
255		3	max	0	5	.012	2	NC	1
256			min	-.015	2	-.157	7	2039.67	7
257		4	max	0	5	.014	2	NC	1
258			min	-.017	2	-.141	7	3055.932	7
259		5	max	0	5	.015	2	NC	1
260			min	-.019	2	-.122	7	NC	1
261	P12A	1	max	0	5	.002	8	NC	1
262			min	-.004	2	-.091	7	NC	1
263		2	max	0	5	.004	8	NC	1
264			min	-.006	2	-.129	7	1143.332	7
265		3	max	0	5	.005	8	NC	4
266			min	-.008	2	-.154	7	895.574	7
267		4	max	0	5	.007	2	NC	4
268			min	-.01	2	-.167	7	1250.407	7
269		5	max	0	5	.009	2	NC	3
270			min	-.012	2	-.171	7	3146.872	2
271	P11	1	max	0	8	0	1	NC	1
272			min	0	1	0	1	NC	1
273		2	max	0	5	0	8	NC	1
274			min	-.001	2	-.024	7	5490.813	7
275		3	max	0	5	.001	8	NC	1
276			min	-.002	2	-.048	7	3431.79	7
277		4	max	0	5	.002	8	NC	4
278			min	-.003	2	-.071	7	3922.095	7
279		5	max	0	5	.002	8	NC	3
280			min	-.004	2	-.091	7	3923.022	2
281	H4	1	max	.614	7	-.007	6	NC	1
282			min	-.021	8	-.061	7	NC	1
283		2	max	.614	7	-.007	6	NC	1
284			min	-.021	8	-.21	7	263.855	7
285		3	max	.614	7	-.007	6	NC	4
286			min	-.021	8	-.232	7	227.409	7
287		4	max	.614	7	-.007	6	NC	1
288			min	-.021	8	-.168	7	357.034	7
289		5	max	.614	7	-.007	6	NC	1
290			min	-.021	8	-.056	7	NC	1
291	H3	1	max	.166	7	.009	3	NC	1
292			min	-.023	2	-.028	2	NC	1
293		2	max	.167	7	.065	7	NC	1
294			min	-.023	2	-.028	2	667.394	7
295		3	max	.168	7	.089	7	NC	1
296			min	-.023	2	-.027	2	459.07	7
297		4	max	.169	7	.07	7	NC	1
298			min	-.023	2	-.027	2	563.59	7
299		5	max	.17	7	.006	5	NC	1
300			min	-.023	2	-.028	2	NC	1
301	H2	1	max	.124	7	.005	3	NC	1
302			min	-.015	2	-.018	2	NC	1
303		2	max	.126	7	.037	7	NC	1
304			min	-.015	2	-.016	2	1123.624	7
305		3	max	.128	7	.053	7	NC	1
306			min	-.015	2	-.016	2	745.91	7
307		4	max	.13	7	.043	7	NC	1

Envelope Member Section Deflections Service (Continued)

	Member	Sec		x [in]	LC	y [in]	LC	L/y' Ratio	LC
308			min	-.015	2	-.017	2	887.93	7
309		5	max	.132	7	0	5	NC	1
310			min	-.015	2	-.018	2	NC	1
311	H1	1	max	.094	7	.015	7	NC	1
312			min	-.003	8	-.005	2	NC	1
313		2	max	.095	7	.074	7	NC	1
314			min	-.003	8	-.007	2	675.717	7
315		3	max	.096	7	.1	7	NC	1
316			min	-.003	8	-.008	2	471.856	7
317		4	max	.097	7	.084	7	NC	1
318			min	-.003	8	-.007	2	586.767	7
319		5	max	.098	7	.017	7	NC	1
320			min	-.003	8	-.005	2	NC	1
321	D2	1	max	0	6	.026	2	NC	1
322			min	-.113	7	-.059	7	NC	1
323		2	max	0	6	.029	2	NC	1
324			min	-.116	7	-.056	7	NC	1
325		3	max	0	6	.032	2	NC	1
326			min	-.12	7	-.053	7	NC	1
327		4	max	0	6	.034	2	NC	1
328			min	-.123	7	-.052	7	NC	1
329		5	max	0	6	.036	2	NC	1
330			min	-.126	7	-.05	7	NC	1
331	D1	1	max	0	6	.006	2	NC	1
332			min	-.078	7	-.11	7	NC	1
333		2	max	0	6	.011	2	NC	1
334			min	-.082	7	-.106	7	NC	1
335		3	max	0	6	.015	2	NC	1
336			min	-.086	7	-.102	7	NC	1
337		4	max	0	6	.019	2	NC	1
338			min	-.09	7	-.1	7	NC	1
339		5	max	0	6	.023	2	NC	1
340			min	-.094	7	-.097	7	NC	1

Envelope Beam Deflection Checks

Be...	Design Rule	Span	Defl [in]	Ratio	LC	Defl [in]	Ratio	LC	Defl [in]	Ratio	LC
No Data to Print ...											

Envelope AISI S100-12: LRFD Cold Formed Steel Code Checks

	Member	Shape	Code Check	Loc[in]	LC	Shear C...	Loc[in]	LC	Phi*Pn[lb]	Phi*Tn[lb]	Phi*Mn[lb-in]	Cb	Cm	Eqn
1	P21	UA300x22...	.891	8.5	7	.103	0	7	31228.065	33065.01	17761.94	1	.85	C5.2.2-2
2	P22A	UA300x22...	.819	0	7	.019	20	7	25233.668	33065.01	17761.94	1	.85	C5.2.2-1
3	P14A	UA300x22...	.780	0	7	.046	0	7	28258.062	33065.01	17761.94	1	.85	C5.2.2-3
4	P24A	UA300x22...	.743	0	7	.033	0	7	28258.062	33065.01	17761.94	1	.85	C5.2.2-3
5	P13B	UA300x22...	.723	20	7	.052	20	7	25233.668	33065.01	17761.94	1	.85	C3.3.2-1
6	H4	FBA275x1...	.715	0	7	.023	39.5	7	6814.335	16087.5	3481.013	1	1	C5.1.2-1
7	P23B	UA300x22...	.710	20	7	.048	20	7	25233.668	33065.01	17761.94	1	.85	C5.2.2-3
8	D1	FBA275x1...	.694	0	7	.001	50.214	1	4303.838	16087.5	2999.21	1	1	C5.2.2-1
9	D2	FBA275x1...	.614	0	7	.001	50.214	1	4303.838	16087.5	2999.21	1	1	C5.2.2-1
10	P12A	UA300x22...	.580	0	7	.016	20	7	25233.668	33065.01	17761.94	1	.85	C5.2.2-3
11	P11	UA300x22...	.559	8.5	7	.086	0	7	30096.378	33065.01	17761.94	1	.85	C5.2.2-3
12	P22B	UA300x22...	.547	0	7	.040	20	7	25233.668	33065.01	17761.94	1	.85	C5.2.2-1
13	P24B	UA300x22...	.501	0	7	.034	0	7	28258.062	33065.01	17761.94	1	.85	C5.2.2-3
14	P14B	UA300x22...	.442	0	7	.046	0	7	28258.062	33065.01	17761.94	1	.85	C5.2.2-3

Envelope AISI S100-12: LRFD Cold Formed Steel Code Checks (Continued)

	Member	Shape	Code Check	Loc[in]	LC	Shear C...	Loc[in]	LC	Phi*Pn[lb]	Phi*Tn[lb]	Phi*Mn[lb-in]	Cb	Cm	Eqn
15	P23A	UA300x22...	.439	20	7	.024	20	7	25233.668	33065.01	17761.94	1	.85	C5.2.2-3
16	P13A	UA300x22...	.389	20	7	.027	20	7	25233.668	33065.01	17761.94	1	.85	C5.2.2-3
17	P31	UA300x22...	.333	12	2	.026	0	8	29078.254	33065.01	30814.279	1	.85	C5.2.2-1
18	P12B	UA300x22...	.327	0	7	.034	20	7	25233.668	33065.01	17761.94	1	.85	C5.2.2-3
19	P32B	UA300x22...	.301	18	8	.021	0	8	26083.942	33065.01	28589.395	1	.85	C5.2.2-1
20	H3	FBA275x1...	.289	39.5	7	.007	39.5	7	6814.335	16087.5	3466.938	1	1	C3.3.2-1
21	P32A	UA300x22...	.288	0	8	.021	0	8	26083.942	33065.01	28584.895	1	.85	C5.2.2-1
22	H1	FBA275x1...	.266	39.5	7	.006	39.5	7	6814.335	16087.5	3466.938	1	1	C3.3.2-1
23	P25	UA300x22...	.245	0	7	.040	0	7	30331.367	33065.01	17761.94	1	.85	C5.2.2-3
24	P15	UA300x22...	.244	0	7	.040	0	7	30331.367	33065.01	17761.94	1	.85	C5.2.2-3
25	P33B	UA300x22...	.244	20	8	.016	0	8	25233.668	33065.01	28599.832	1	.85	C5.2.2-3
26	H2	FBA275x1...	.230	39.5	7	.006	39.5	7	6814.335	16087.5	7031.25	1	1	C5.1.2-1
27	P33A	UA300x22...	.192	0	8	.016	0	8	26881.33	33065.01	28582.479	1	.85	C5.2.2-3
28	P34B	UA300x22...	.149	18	8	.011	0	8	26083.942	33065.01	28614.606	1	.85	C5.2.2-3
29	P34A	UA300x22...	.096	18	8	.011	0	8	26083.942	33065.01	28580.977	1	.85	C5.2.2-3

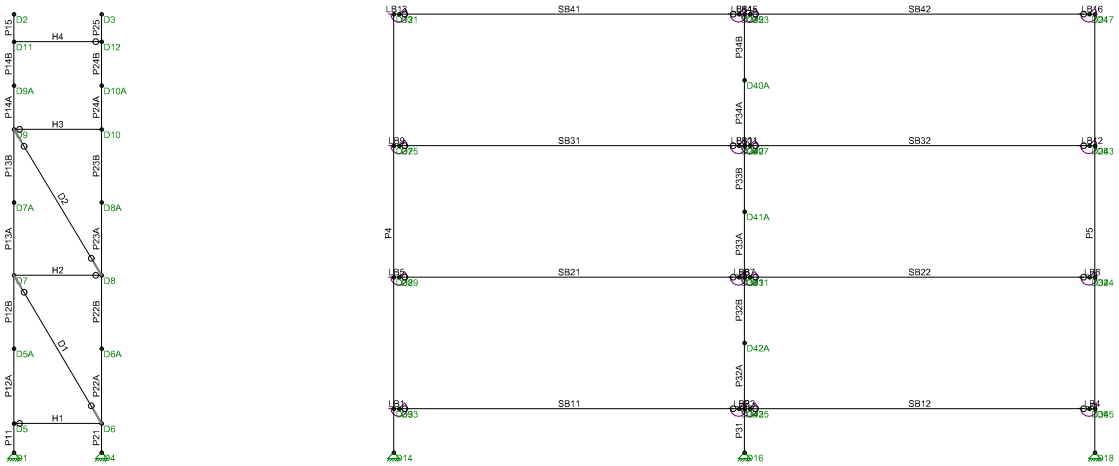

Envelope Only Solution

Johnston Burkholder Asso...	24W x 120H D Storage Rack Frame	SK - 1
KSH		Apr 17, 2024 at 3:15 PM
2401802403		24W x 120H - D Frame (1200lbs - ...

Joint Coordinates and Temperatures

	Label	X [in]	Y [in]	Temp [F]
1	D1	0	0	0
2	D2	0	120	0
3	D3	24	120	0
4	D4	24	0	0
5	D5	0	8	0
6	D5A	0	28.5	0
7	D6	24	8	0
8	D6A	24	28.5	0
9	D7	0	48.5	0
10	D7A	0	68.5	0
11	D8	24	48.5	0
12	D8A	24	68.5	0
13	D9	0	88.5	0
14	D9A	0	100.5	0
15	D10	24	88.5	0
16	D10A	24	100.5	0
17	D11	0	112.5	0
18	D12	24	112.5	0
19	D13	104	120	0
20	D14	104	0	0
21	D15	200	120	0
22	D16	200	0	0
23	D17	296	120	0
24	D18	296	0	0
25	D21	105.5	120	0
26	D22	198.5	120	0
27	D23	201.5	120	0
28	D24	294.5	120	0
29	D25	105.5	84	0
30	D26	198.5	84	0
31	D27	201.5	84	0
32	D28	294.5	84	0
33	D29	105.5	48	0
34	D30	198.5	48	0
35	D31	201.5	48	0
36	D32	294.5	48	0
37	D33	105.5	12	0
38	D34	198.5	12	0
39	D35	201.5	12	0
40	D36	294.5	12	0
41	D37	104	84	0
42	D38	104	48	0
43	D39	104	12	0
44	D40	200	84	0
45	D40A	200	102	0
46	D41	200	48	0
47	D41A	200	66	0
48	D42	200	12	0
49	D42A	200	30	0
50	D43	296	84	0
51	D44	296	48	0
52	D45	296	12	0

Joint Boundary Conditions

	Joint Label	X [k/in]	Y [k/in]	Rotation[k-ft/rad]
1	D1	Reaction	Reaction	
2	D4	Reaction	Reaction	
3	D14	Reaction	Reaction	
4	D16	Reaction	Reaction	
5	D18	Reaction	Reaction	
6	D21			S71.96
7	D23			S71.96
8	D22			S71.96
9	D24			S71.96
10	D25			S71.96
11	D27			S71.96
12	D26			S71.96
13	D28			S71.96
14	D29			S71.96
15	D31			S71.96
16	D30			S71.96
17	D32			S71.96
18	D33			S71.96
19	D35			S71.96
20	D34			S71.96
21	D36			S71.96

Member Primary Data

	Label	I Joint	J Joint	Rotate(deg)	Section/Shape	Type	Design List	Material	Design Rules
1	P5	D17	D18	180	UC	Column	None	A570_Gr55	Typical
2	P4	D13	D14	180	UC	Column	None	A570_Gr55	Typical
3	P34A	D40	D40A	180	UC	Column	None	A570_Gr55	Typical
4	P34B	D40A	D15	180	UC	Column	None	A570_Gr55	Typical
5	P33A	D41	D41A	180	UC	Column	None	A570_Gr55	Typical
6	P33B	D41A	D40	180	UC	Column	None	A570_Gr55	Typical
7	P32A	D42	D42A	180	UC	Column	None	A570_Gr55	Typical
8	P32B	D42A	D41	180	UC	Column	None	A570_Gr55	Typical
9	P31	D16	D42	180	UC	Column	None	A570_Gr55	Typical
10	P25	D12	D3	270	UC	Column	None	A570_Gr55	Typical
11	P24A	D10	D10A	270	UC	Column	None	A570_Gr55	Typical
12	P24B	D10A	D12	270	UC	Column	None	A570_Gr55	Typical
13	P23A	D8	D8A	270	UC	Column	None	A570_Gr55	Typical
14	P23B	D8A	D10	270	UC	Column	None	A570_Gr55	Typical
15	P22A	D6	D6A	270	UC	Column	None	A570_Gr55	Typical
16	P22B	D6A	D8	270	UC	Column	None	A570_Gr55	Typical
17	P21	D4	D6	270	UC	Column	None	A570_Gr55	Typical
18	P15	D11	D2	90	UC	Column	None	A570_Gr55	Typical
19	P14A	D9	D9A	90	UC	Column	None	A570_Gr55	Typical
20	P14B	D9A	D11	90	UC	Column	None	A570_Gr55	Typical
21	P13A	D7	D7A	90	UC	Column	None	A570_Gr55	Typical
22	P13B	D7A	D9	90	UC	Column	None	A570_Gr55	Typical
23	P12A	D5	D5A	90	UC	Column	None	A570_Gr55	Typical
24	P12B	D5A	D7	90	UC	Column	None	A570_Gr55	Typical
25	P11	D1	D5	90	UC	Column	None	A570_Gr55	Typical
26	H4	D11	D12	90	UWh	Beam	None	A570_Gr55	Typical
27	H3	D9	D10	90	UWh	Beam	None	A570_Gr55	Typical
28	H2	D7	D8	90	UWh	Beam	None	A570_Gr55	Typical
29	H1	D5	D6	90	UWh	Beam	None	A570_Gr55	Typical
30	SB42	D24	D23		FBts	Beam	Tube	A570 Gr. 55	Typical

Member Primary Data (Continued)

	Label	I Joint	J Joint	Rotate(deg)	Section/Shape	Type	Design List	Material	Design Rules
31	SB41	D22	D21		FBts	Beam	Tube	A570 Gr. 55	Typical
32	SB32	D28	D27		FBts	Beam	Tube	A570 Gr. 55	Typical
33	SB31	D26	D25		FBts	Beam	Tube	A570 Gr. 55	Typical
34	SB22	D32	D31		FBts	Beam	Tube	A570 Gr. 55	Typical
35	SB21	D30	D29		FBts	Beam	Tube	A570 Gr. 55	Typical
36	SB12	D36	D35		FBts	Beam	Tube	A570 Gr. 55	Typical
37	SB11	D34	D33		FBts	Beam	Tube	A570 Gr. 55	Typical
38	LB16	D17	D24		RIGID	None	None	RIGID	Typical
39	LB15	D23	D15		RIGID	None	None	RIGID	Typical
40	LB14	D15	D22		RIGID	None	None	RIGID	Typical
41	LB13	D21	D13		RIGID	None	None	RIGID	Typical
42	LB12	D43	D28		RIGID	None	None	RIGID	Typical
43	LB11	D27	D40		RIGID	None	None	RIGID	Typical
44	LB10	D40	D26		RIGID	None	None	RIGID	Typical
45	LB9	D25	D37		RIGID	None	None	RIGID	Typical
46	LB8	D44	D32		RIGID	None	None	RIGID	Typical
47	LB7	D31	D41		RIGID	None	None	RIGID	Typical
48	LB6	D41	D30		RIGID	None	None	RIGID	Typical
49	LB5	D29	D38		RIGID	None	None	RIGID	Typical
50	LB4	D45	D36		RIGID	None	None	RIGID	Typical
51	LB3	D35	D42		RIGID	None	None	RIGID	Typical
52	LB2	D42	D34		RIGID	None	None	RIGID	Typical
53	LB1	D33	D39		RIGID	None	None	RIGID	Typical
54	D2	D9	D8	90	UWd	VBrace	None	A570_Gr55	Typical
55	D1	D7	D6	90	UWd	VBrace	None	A570_Gr55	Typical

Member Advanced Data

	Label	I Release	J Release	I Offset[in]	J Offset[in]	T/C Only	Physical	Defl Rati...	TOM	Inactive
1	P5						Yes	** NA **	Yes	Exclude
2	P4						Yes	** NA **	Yes	Exclude
3	P34A						Yes	** NA **	Yes	
4	P34B						Yes	** NA **	Yes	
5	P33A						Yes	** NA **	Yes	
6	P33B						Yes	** NA **	Yes	
7	P32A						Yes	** NA **	Yes	
8	P32B						Yes	** NA **	Yes	
9	P31						Yes	** NA **	Yes	
10	P25						Yes	** NA **	Yes	
11	P24A						Yes	** NA **	Yes	
12	P24B						Yes	** NA **	Yes	
13	P23A						Yes	** NA **	Yes	
14	P23B						Yes	** NA **	Yes	
15	P22A						Yes	** NA **	Yes	
16	P22B						Yes	** NA **	Yes	
17	P21						Yes	** NA **	Yes	
18	P15						Yes	** NA **	Yes	
19	P14A						Yes	** NA **	Yes	
20	P14B						Yes	** NA **	Yes	
21	P13A						Yes	** NA **	Yes	
22	P13B						Yes	** NA **	Yes	
23	P12A						Yes	** NA **	Yes	
24	P12B						Yes	** NA **	Yes	
25	P11						Yes	** NA **	Yes	
26	H4		PIN				Yes		Yes	
27	H3	PIN					Yes		Yes	

Member Advanced Data (Continued)

	Label	I Release	J Release	I Offset[in]	J Offset[in]	T/C Only	Physical	Defl Rati...	TOM	Inactive
28	H2		PIN				Yes		Yes	
29	H1	PIN					Yes		Yes	
30	SB42	PIN	PIN				Yes		Yes	
31	SB41	PIN	PIN				Yes		Yes	Exclude
32	SB32	PIN	PIN				Yes		Yes	
33	SB31	PIN	PIN				Yes		Yes	Exclude
34	SB22	PIN	PIN				Yes		Yes	
35	SB21	PIN	PIN				Yes		Yes	Exclude
36	SB12	PIN	PIN				Yes		Yes	
37	SB11	PIN	PIN				Yes		Yes	Exclude
38	LB16						Yes	** NA **		Exclude
39	LB15						Yes	** NA **		Exclude
40	LB14						Yes	** NA **		Exclude
41	LB13						Yes	** NA **		Exclude
42	LB12						Yes	** NA **		Exclude
43	LB11						Yes	** NA **		Exclude
44	LB10						Yes	** NA **		Exclude
45	LB9						Yes	** NA **		Exclude
46	LB8						Yes	** NA **		Exclude
47	LB7						Yes	** NA **		Exclude
48	LB6						Yes	** NA **		Exclude
49	LB5						Yes	** NA **		Exclude
50	LB4						Yes	** NA **		Exclude
51	LB3						Yes	** NA **		Exclude
52	LB2						Yes	** NA **		Exclude
53	LB1						Yes	** NA **		Exclude
54	D2	PIN	PIN	3.875	3.875		Yes	** NA **	Yes	
55	D1	PIN	PIN	3.875	3.875		Yes	** NA **	Yes	

Cold Formed Steel Design Parameters

	Label	Shape	Length...	Lb-out[in]	Lb-in[in]	Lcomp to...	Lcom...	L-tor...	K-out	K-in	Cm	Cb	R	a[in]	Out s...	In sw...
1	P5	UC	120	36	36	36	36									
2	P4	UC	120	36	36	36	36									
3	P34A	UC	18	22	31.5	31.5	31.5		1	1					Yes	Yes
4	P34B	UC	18	22	31.5	31.5	31.5		1	1					Yes	Yes
5	P33A	UC	18	35	31.5	31.5	31.5		1	1						Yes
6	P33B	UC	18	35	31.5	31.5	31.5		1	1						Yes
7	P32A	UC	18	35.5	31.5	31.5	31.5		1	1						Yes
8	P32B	UC	18	35.5	31.5	31.5	31.5		1	1						Yes
9	P31	UC	12	7	7.5	7.5	7.5		1	1					Yes	Yes
10	P25	UC	7.5	7.5	7.5	7.5	7.5		1	1					Yes	Yes
11	P24A	UC	12	31.5	22	22	22		1	1					Yes	Yes
12	P24B	UC	12	31.5	22	22	22		1	1					Yes	Yes
13	P23A	UC	20	31.5	35	35	35		1	1					Yes	
14	P23B	UC	20	31.5	35	35	35		1	1					Yes	
15	P22A	UC	20.5	31.5	35.5	35.5	35.5		1	1					Yes	
16	P22B	UC	20	31.5	35.5	35.5	35.5		1	1					Yes	
17	P21	UC	8	7.5	7	7	7		1	1					Yes	Yes
18	P15	UC	7.5	7.5	7.5	7.5	7.5		1	1					Yes	Yes
19	P14A	UC	12	31.5	22	22	22		1	1					Yes	Yes
20	P14B	UC	12	31.5	22	22	22		1	1					Yes	Yes
21	P13A	UC	20	31.5	35	35	35		1	1					Yes	
22	P13B	UC	20	31.5	35	35	35		1	1					Yes	
23	P12A	UC	20.5	31.5	35.5	35.5	35.5		1	1					Yes	
24	P12B	UC	20	31.5	35.5	35.5	35.5		1	1					Yes	

Cold Formed Steel Design Parameters (Continued)

	Label	Shape	Length...	Lb-out[in]	Lb-in[in]	Lcomp to...	Lcom...	L-tor...	K-out	K-in	Cm	Cb	R	a[in]	Out s...	In sw...
25	P11	UC	8	7.5	7	7	7		1	1					Yes	Yes
26	H4	UWh	24			Lb out										
27	H3	UWh	24			Lb out										
28	H2	UWh	24			Lb out										
29	H1	UWh	24			Lb out										
30	D2	UWd	46.648			Lb out										
31	D1	UWd	47.077			Lb out										

Hot Rolled Steel Design Parameters

	Label	Shape	Length[in]	Lb-out[in]	Lb-in[in]	Lcomp top[in]	Lcomp bot[in]	L-torqu...	K-out	K-in	Cb	Function
1	SB42	FBts	93			Lb out						Lateral
2	SB41	FBts	93			Lb out						Lateral
3	SB32	FBts	93			Lb out						Lateral
4	SB31	FBts	93			Lb out						Lateral
5	SB22	FBts	93			Lb out						Lateral
6	SB21	FBts	93			Lb out						Lateral
7	SB12	FBts	93			Lb out						Lateral
8	SB11	FBts	93			Lb out						Lateral

Member Point Loads (BLC 1 : DL)

	Member Label	Direction	Magnitude[lb,lb-in]	Location[in,%]
1	P15	Y	-15	%100
2	P25	Y	-15	%100
3	P13B	Y	-15	15.5
4	P23B	Y	-15	15.5
5	P12B	Y	-15	19.5
6	P22B	Y	-15	19.5
7	P12A	Y	-15	4
8	P22A	Y	-15	4

Member Point Loads (BLC 2 : #1/ #2 / #5 - PL)

	Member Label	Direction	Magnitude[lb,lb-in]	Location[in,%]
1	P15	Y	-517.5	%100
2	P25	Y	-517.5	%100
3	P13B	Y	-517.5	15.5
4	P23B	Y	-517.5	15.5
5	P12B	Y	-517.5	19.5
6	P22B	Y	-517.5	19.5
7	P12A	Y	-517.5	4
8	P22A	Y	-517.5	4

Member Point Loads (BLC 3 : #6a - (0.67)PL)

	Member Label	Direction	Magnitude[lb,lb-in]	Location[in,%]
1	P15	Y	-346.725	%100
2	P25	Y	-346.725	%100
3	P13B	Y	-346.725	15.5
4	P23B	Y	-346.725	15.5
5	P12B	Y	-346.725	19.5
6	P22B	Y	-346.725	19.5
7	P12A	Y	-346.725	4
8	P22A	Y	-346.725	4

Member Point Loads (BLC 4 : #6a - (0.67)PL - horiz - Trans)

	Member Label	Direction	Magnitude[lb,lb-in]	Location[in,%]
1	P15	X	87.8	%100
2	P25	X	87.8	%100
3	P13B	X	62.2	15.5
4	P23B	X	62.2	15.5
5	P12B	X	40.2	19.5
6	P22B	X	40.2	19.5
7	P12A	X	18.3	4
8	P22A	X	18.3	4

Member Point Loads (BLC 5 : #6b - (1)PL - horiz - Trans)

	Member Label	Direction	Magnitude[lb,lb-in]	Location[in,%]
1	P15	X	89.9	%100
2	P25	X	89.9	%100

Member Point Loads (BLC 6 : #5 - (1)PL - horiz - Trans)

	Member Label	Direction	Magnitude[lb,lb-in]	Location[in,%]
1	P15	X	131	%100
2	P25	X	131	%100
3	P13B	X	92.8	15.5
4	P23B	X	92.8	15.5
5	P12B	X	60	19.5
6	P22B	X	60	19.5
7	P12A	X	27.3	4
8	P22A	X	27.3	4

Member Point Loads (BLC 7 : #6b - (1)PL)

	Member Label	Direction	Magnitude[lb,lb-in]	Location[in,%]
1	P15	Y	-517.5	%100
2	P25	Y	-517.5	%100

Member Distributed Loads (BLC 1 : DL)

	Member Label	Direction	Start Magnitude[lb/ft,F,ksf]	End Magnitude[lb...	Start Location[in,%]	End Location[in,%]
1	SB41	Y	-1.95	-1.95	0	0
2	SB42	Y	-1.95	-1.95	0	0
3	SB31	Y	-1.95	-1.95	0	0
4	SB32	Y	-1.95	-1.95	0	0
5	SB21	Y	-1.95	-1.95	0	0
6	SB22	Y	-1.95	-1.95	0	0
7	SB11	Y	-1.95	-1.95	0	0
8	SB12	Y	-1.95	-1.95	0	0

Member Distributed Loads (BLC 2 : #1/ #2 / #5 - PL)

	Member Label	Direction	Start Magnitude[lb/ft,F,ksf]	End Magnitude[lb...	Start Location[in,%]	End Location[in,%]
1	SB41	Y	-66.774	-66.774	0	0
2	SB42	Y	-66.774	-66.774	0	0
3	SB31	Y	-66.774	-66.774	0	0
4	SB32	Y	-66.774	-66.774	0	0
5	SB21	Y	-66.774	-66.774	0	0
6	SB22	Y	-66.774	-66.774	0	0
7	SB11	Y	-66.774	-66.774	0	0
8	SB12	Y	-66.774	-66.774	0	0

Member Distributed Loads (BLC 3 : #6a - (0.67)PL)

	Member Label	Direction	Start Magnitude[lb/ft,F,ksf]	End Magnitude[lb...	Start Location[in,%]	End Location[in,%]
1	SB41	Y	-44.739	-44.739	0	0
2	SB42	Y	-44.739	-44.739	0	0
3	SB31	Y	-44.739	-44.739	0	0
4	SB32	Y	-44.739	-44.739	0	0
5	SB21	Y	-44.739	-44.739	0	0
6	SB22	Y	-44.739	-44.739	0	0
7	SB11	Y	-44.739	-44.739	0	0
8	SB12	Y	-44.739	-44.739	0	0

Member Distributed Loads (BLC 7 : #6b - (1)PL)

	Member Label	Direction	Start Magnitude[lb/ft,F,ksf]	End Magnitude[lb...	Start Location[in,%]	End Location[in,%]
1	SB41	Y	-66.774	-66.774	0	0
2	SB42	Y	-66.774	-66.774	0	0

Member Distributed Loads (BLC 8 : #6a - (0.67)PL - horiz - Long)

	Member Label	Direction	Start Magnitude[lb/ft,F,ksf]	End Magnitude[lb...	Start Location[in,%]	End Location[in,%]
1	SB41	X	31.8	31.8	0	0
2	SB42	X	31.8	31.8	0	0
3	SB31	X	22.6	22.6	0	0
4	SB32	X	22.6	22.6	0	0
5	SB21	X	14.6	14.6	0	0
6	SB22	X	14.6	14.6	0	0
7	SB11	X	6.6	6.6	0	0
8	SB12	X	6.6	6.6	0	0

Member Distributed Loads (BLC 9 : #6b - (1)PL - horiz - Long)

	Member Label	Direction	Start Magnitude[lb/ft,F,ksf]	End Magnitude[lb...	Start Location[in,%]	End Location[in,%]
1	SB41	X	32.6	32.6	0	0
2	SB42	X	32.6	32.6	0	0

Member Distributed Loads (BLC 10 : #5 - (1)PL - horiz - Long)

	Member Label	Direction	Start Magnitude[lb/ft,F,ksf]	End Magnitude[lb...	Start Location[in,%]	End Location[in,%]
1	SB41	X	47.5	47.5	0	0
2	SB42	X	47.5	47.5	0	0
3	SB31	X	33.7	33.7	0	0
4	SB32	X	33.7	33.7	0	0
5	SB21	X	21.8	21.8	0	0
6	SB22	X	21.8	21.8	0	0
7	SB11	X	9.9	9.9	0	0
8	SB12	X	9.9	9.9	0	0

Joint Loads and Enforced Displacements (BLC 11 : Notional (+Xg) Lat All Shlvs)

	Joint Label	L,D,M	Direction	Magnitude[(lb,lb-in), (in,rad), (lb*s^...
1	D2	L	X	2.5
2	D3	L	X	2.5
3	D15	L	X	2.5
4	D40	L	X	2.5
5	D41	L	X	2.5
6	D42	L	X	2.5

Basic Load Cases

	BLC Description	Category	X Gravity	Y Gravity	Joint	Point	Distributed
1	DL	DL		-1		8	8
2	#1/ #2 / #5 - PL	LL				8	8
3	#6a - (0.67)PL	LL				8	8
4	#6a - (0.67)PL - horiz - Trans	EL	.394			8	
5	#6b - (1)PL - horiz - Trans	EL	.394			2	
6	#5 - (1)PL - horiz - Trans	EL	.394			8	
7	#6b - (1)PL	LL				2	2
8	#6a - (0.67)PL - horiz - Long	EL	.098				8
9	#6b - (1)PL - horiz - Long	EL	.098				2
10	#5 - (1)PL - horiz - Long	EL	.098				8
11	Notional (+Xg) Lat All Shlvs	NLX	.004		6		

Load Combinations

	Description	So...	P...	S...	BLC	Fac..	BLC	Fac..	BLC	Fac..	BLC	Fac..	BLC	Fac..	BLC	Fac..	BLC	Fac..	BLC	Fac..	BLC	Fac..	BLC	Fac...
1	RMI - LC #1	Yes	Y		1	1.4	2	1.2	11	1														
2	RMI - LC #2	Yes	Y		1	1.2	2	1.4	11	1														
3	RMI - LC #6a - Trans	Yes	Y		1	.58	3	.58	4	1														
4	RMI - LC #6a - Long	Yes	Y		1	.58	3	.58	8	1														
5	RMI - LC #6b - Trans	Yes	Y		1	.58	7	.58	5	1														
6	RMI - LC #6b - Long	Yes	Y		1	.58	7	.58	9	1														
7	RMI - LC #5 - Trans	Yes	Y		1	1.52	2	1.17	6	1														
8	RMI - LC #5 - Long	Yes	Y		1	1.52	2	1.17	10	1														

Envelope Joint Reactions

	Joint		X [lb]	LC	Y [lb]	LC	Moment [lb-in]	LC
1	D33	max	0	8	0	8	13817.408	8
2		min	0	1	0	1	605.954	5
3	D36	max	0	8	0	8	12606.373	8
4		min	0	1	0	1	-632.528	2
5	D32	max	0	8	0	8	12573.961	8
6		min	0	1	0	1	92.743	1
7	D29	max	0	8	0	8	12510.599	8
8		min	0	1	0	1	24.539	2
9	D35	max	0	8	0	8	12180.535	8
10		min	0	1	0	1	64.516	1
11	D34	max	0	8	0	8	12180.535	8
12		min	0	1	0	1	64.516	1
13	D31	max	0	8	0	8	11379.859	8
14		min	0	1	0	1	55.098	1
15	D30	max	0	8	0	8	11379.859	8
16		min	0	1	0	1	55.098	1
17	D25	max	0	8	0	8	9457.627	8
18		min	0	1	0	1	88.278	1
19	D28	max	0	8	0	8	9365.569	8
20		min	0	1	0	1	-12.219	2
21	D27	max	0	8	0	8	8662.778	8
22		min	0	1	0	1	38.018	1
23	D26	max	0	8	0	8	8662.778	8
24		min	0	1	0	1	38.018	1
25	D21	max	0	8	0	8	6233.328	8
26		min	0	1	0	1	137.177	1
27	D24	max	0	8	0	8	6014.091	8
28		min	0	1	0	1	-102.44	2

Envelope Joint Reactions (Continued)

	Joint		X [lb]	LC	Y [lb]	LC	Moment [lb-in]	LC
29	D23	max	0	8	0	8	5152.309	8
30		min	0	1	0	1	21.273	1
31	D22	max	0	8	0	8	5152.309	8
32		min	0	1	0	1	21.273	1
33	D1	max	-2.584	6	2977.968	2	0	8
34		min	-288.985	7	-693.834	3	0	1
35	D4	max	.666	2	4853.816	7	0	8
36		min	-353.23	7	361.866	6	0	1
37	D14	max	-28.936	5	1563.024	2	0	8
38		min	-573.638	8	206.119	5	0	1
39	D16	max	-5.46	2	3105.156	2	0	8
40		min	-913.007	8	400.279	6	0	1
41	D18	max	162.74	2	1563.005	2	0	8
42		min	-288.759	8	198.639	6	0	1
43	Totals:	max	-16.222	2	12232.185	2		
44		min	-1780.388	8	1510.037	6		

Envelope Joint Displacements

	Joint		X [in]	LC	Y [in]	LC	Rotation [rad]	LC
1	D1	max	0	8	0	8	2.286e-04	2
2		min	0	1	0	1	-4.242e-03	7
3	D2	max	.319	7	.003	3	5.097e-05	8
4		min	-.018	8	-.013	2	-8.512e-03	7
5	D3	max	.32	7	-.003	6	6.107e-05	8
6		min	-.018	8	-.016	7	-9.197e-03	7
7	D4	max	0	8	0	8	2.462e-04	2
8		min	0	1	0	1	-4.635e-03	7
9	D5	max	.033	7	0	3	2.431e-04	2
10		min	-.002	2	-.002	2	-3.429e-03	7
11	D5A	max	.065	7	.002	3	2.693e-04	2
12		min	-.007	2	-.005	2	-1.713e-04	3
13	D6	max	.035	7	0	6	2.422e-04	2
14		min	-.002	2	-.003	7	-3.585e-03	7
15	D6A	max	.069	7	0	6	2.549e-04	2
16		min	-.007	2	-.007	7	-1.408e-04	5
17	D7	max	.052	7	.003	3	1.07e-03	7
18		min	-.012	2	-.008	2	3.548e-05	6
19	D7A	max	.039	7	.003	3	1.555e-04	2
20		min	-.016	2	-.01	2	-3.133e-04	7
21	D8	max	.055	7	-.001	6	9.609e-04	7
22		min	-.012	2	-.011	7	4.339e-05	6
23	D8A	max	.046	7	-.002	6	1.54e-04	2
24		min	-.016	2	-.013	7	-4.229e-04	7
25	D9	max	.083	7	.004	3	8.753e-05	8
26		min	-.018	2	-.011	2	-4.679e-03	7
27	D9A	max	.159	7	.003	3	7.024e-05	8
28		min	-.018	2	-.012	2	-7.492e-03	7
29	D10	max	.085	7	-.002	6	8.109e-05	8
30		min	-.018	2	-.014	7	-4.044e-03	7
31	D10A	max	.154	7	-.002	6	6.578e-05	8
32		min	-.018	2	-.015	7	-7.115e-03	7
33	D11	max	.256	7	.003	3	5.098e-05	8
34		min	-.017	8	-.013	2	-8.175e-03	7
35	D12	max	.252	7	-.002	6	6.107e-05	8
36		min	-.017	2	-.015	7	-8.859e-03	7

Envelope Joint Displacements (Continued)

	Joint		X [in]	LC	Y [in]	LC	Rotation [rad]	LC
37	D13	max	1.688	8	-.001	5	-1.589e-04	1
38		min	.023	1	-.007	2	-7.219e-03	8
39	D14	max	0	8	0	8	-7.769e-04	5
40		min	0	1	0	1	-1.756e-02	8
41	D15	max	1.674	8	-.003	5	-2.464e-05	1
42		min	.008	1	-.014	2	-5.967e-03	8
43	D16	max	0	8	0	8	-8.956e-05	1
44		min	0	1	0	1	-1.66e-02	8
45	D17	max	1.659	8	-.001	6	1.186e-04	2
46		min	-.009	2	-.007	2	-6.965e-03	8
47	D18	max	0	8	0	8	1.161e-03	2
48		min	0	1	0	1	-1.54e-02	8
49	D21	max	1.688	8	-.002	5	-1.589e-04	1
50		min	.023	1	-.017	8	-7.219e-03	8
51	D22	max	1.674	8	.002	6	-2.464e-05	1
52		min	.008	1	-.014	2	-5.967e-03	8
53	D23	max	1.674	8	-.003	5	-2.464e-05	1
54		min	.008	1	-.021	8	-5.967e-03	8
55	D24	max	1.659	8	.005	4	1.186e-04	2
56		min	-.009	2	-.007	2	-6.965e-03	8
57	D25	max	1.336	8	-.002	5	-1.022e-04	1
58		min	.021	1	-.022	8	-1.095e-02	8
59	D26	max	1.322	8	.007	4	-4.403e-05	1
60		min	.007	1	-.012	2	-1.003e-02	8
61	D27	max	1.322	8	-.003	5	-4.403e-05	1
62		min	.007	1	-.025	8	-1.003e-02	8
63	D28	max	1.307	8	.011	8	1.415e-05	2
64		min	-.01	2	-.006	2	-1.085e-02	8
65	D29	max	.822	8	-.001	5	-2.842e-05	2
66		min	.019	1	-.025	8	-1.449e-02	8
67	D30	max	.807	8	.013	8	-6.381e-05	1
68		min	.004	1	-.008	2	-1.318e-02	8
69	D31	max	.807	8	-.002	5	-6.381e-05	1
70		min	.004	1	-.027	8	-1.318e-02	8
71	D32	max	.792	8	.018	8	-1.074e-04	1
72		min	-.013	2	-.004	2	-1.456e-02	8
73	D33	max	.208	8	-.001	5	-7.017e-04	5
74		min	.009	5	-.025	8	-1.6e-02	8
75	D34	max	.195	8	.019	8	-7.471e-05	1
76		min	.001	1	-.002	2	-1.411e-02	8
77	D35	max	.195	8	-.001	5	-7.471e-05	1
78		min	.001	1	-.023	8	-1.411e-02	8
79	D36	max	.184	8	.021	8	7.325e-04	2
80		min	-.013	2	-.002	2	-1.46e-02	8
81	D37	max	1.336	8	-.001	5	-1.022e-04	1
82		min	.021	1	-.006	2	-1.095e-02	8
83	D38	max	.822	8	0	5	-2.842e-05	2
84		min	.019	1	-.004	2	-1.449e-02	8
85	D39	max	.208	8	0	5	-7.017e-04	5
86		min	.009	5	-.001	2	-1.6e-02	8
87	D40	max	1.322	8	-.002	5	-4.403e-05	1
88		min	.007	1	-.012	2	-1.003e-02	8
89	D40A	max	1.516	8	-.002	5	-4.336e-05	1
90		min	.007	1	-.013	2	-1.033e-02	8
91	D41	max	.807	8	-.001	6	-6.381e-05	1
92		min	.004	1	-.008	2	-1.318e-02	8
93	D41A	max	1.079	8	-.002	6	-6.955e-05	1

Envelope Joint Displacements (Continued)

	Joint		X [in]	LC	Y [in]	LC	Rotation [rad]	LC
94		min	.005	1	-.01	2	-1.514e-02	8
95	D42	max	.195	8	0	6	-7.471e-05	1
96		min	.001	1	-.002	2	-1.411e-02	8
97	D42A	max	.506	8	0	6	-9.171e-05	1
98		min	.003	1	-.005	2	-1.807e-02	8
99	D43	max	1.307	8	-.001	6	1.415e-05	2
100		min	-.01	2	-.006	2	-1.085e-02	8
101	D44	max	.792	8	0	6	-1.074e-04	1
102		min	-.013	2	-.004	2	-1.456e-02	8
103	D45	max	.184	8	0	6	7.325e-04	2
104		min	-.013	2	-.001	2	-1.46e-02	8

Envelope Maximum Member Section Forces

	Member		Axial[lb]	Loc[in]	LC	Shear[lb]	Loc[in]	LC	Moment[lb-in]	Loc[in]	LC
1	P34A	max	777.334	0	2	398.895	0	8	4049.329	0	8
2		min	225.124	18	4	1.545	18	1	-3128.472	18	8
3	P34B	max	774.204	0	2	397.242	0	8	-14.952	0	1
4		min	223.611	18	4	1.527	18	1	-10276.52	18	8
5	P33A	max	1554.659	0	2	604.241	0	8	8447.562	0	8
6		min	349.711	18	5	2.675	18	1	-2426.471	18	8
7	P33B	max	1551.529	0	2	601.819	0	8	-15.282	0	1
8		min	348.198	18	5	2.65	18	1	-13256.917	18	8
9	P32A	max	2331.994	0	2	755.832	0	8	12885.464	0	8
10		min	375.248	18	5	3.837	18	1	-717.205	18	8
11	P32B	max	2328.864	0	2	754.576	0	8	166.16	0	6
12		min	373.735	18	5	3.815	18	1	-14297.28	18	8
13	P31	max	3105.156	0	2	956.634	0	8	0	0	1
14		min	399.271	12	6	5.693	12	1	-11478.58	12	8
15	P25	max	743.804	0	2	137.176	0	7	1027.212	0	7
16		min	209.801	7.5	3	-.038	7.5	8	-.052	4.766	8
17	P24A	max	749.442	0	2	104.971	0	7	3549.856	0	7
18		min	211.869	12	4	.514	12	6	5.556	12	6
19	P24B	max	747.355	0	2	105.935	0	7	2294.317	0	7
20		min	210.861	12	4	.345	12	6	.112	12	8
21	P23A	max	1500.173	0	2	.588	0	8	1414.626	20	7
22		min	322.945	20	6	-62.853	20	7	-221.204	0	5
23	P23B	max	1496.695	0	2	.407	0	8	3046.667	20	7
24		min	213.492	20	4	-154.093	20	7	6.657	0	6
25	P22A	max	3628.843	0	7	-.123	0	6	5.96	20.5	8
26		min	340.716	20.5	6	-64.295	20.5	7	-2507.232	0	7
27	P22B	max	2996.053	0	7	-.419	0	6	160.743	20	7
28		min	330.335	20	6	-132.627	20	7	-1310.374	0	7
29	P21	max	4853.816	0	7	374.715	0	7	11.27	8	2
30		min	361.193	8	6	-1.411	8	2	-2995.896	8	7
31	P15	max	743.804	0	2	136.745	0	7	1023.981	0	7
32		min	209.801	7.5	3	-.032	7.5	8	-.036	5.234	8
33	P14A	max	749.167	0	2	169.117	0	7	3690.226	0	7
34		min	173.895	12	3	-.161	12	8	7.073	12	6
35	P14B	max	747.08	0	2	169.421	0	7	1664.935	0	7
36		min	172.887	12	3	-.32	12	8	-364.002	12	7
37	P13A	max	1488.915	0	2	.129	0	4	1612.711	20	7
38		min	-297.368	20	3	-82.694	20	7	-355.189	0	5
39	P13B	max	1485.438	0	2	-.145	0	4	3698.473	20	7
40		min	-508.849	20	3	-176.779	20	7	4.186	0	6
41	P12A	max	2973.557	0	2	-.497	0	6	14.752	20.5	8

Envelope Maximum Member Section Forces (Continued)

	Member		Axial[lb]	Loc[in]	LC	Shear[lb]	Loc[in]	LC	Moment[lb-in]	Loc[in]	LC
42		min	-892.962	20.5	3	-57.492	20.5	7	-2318.175	0	7
43	P12B	max	2227.493	0	2	-.792	0	6	67.223	20	8
44		min	-1104.443	20	3	-118.104	20	7	-1260.781	0	7
45	P11	max	2977.968	0	2	290	0	7	0	0	1
46		min	-694.506	8	3	2.468	8	6	-2318.175	8	7
47	H4	max	.605	24	8	2.507	0	8	19.605	0	8
48		min	-32.67	0	7	-59.501	24	7	-1376.484	0	7
49	H3	max	-.83	24	8	1.914	0	8	593.706	24	7
50		min	-258.021	0	7	-22.634	24	7	-12.704	13.75	8
51	H2	max	-3.569	24	8	3.262	0	8	236.24	24	7
52		min	-672.007	0	7	-4.11	24	7	.567	18.75	6
53	H1	max	-2.741	24	6	3.036	0	8	591.868	24	7
54		min	-317.47	0	7	-21.686	24	7	-37.868	24	2
55	SB42	max	192.076	0	8	385.541	93	2	9014.708	46.5	2
56		min	-178.372	93	8	-385.536	0	2	-414.714	93	8
57	SB32	max	156.204	0	8	385.541	93	2	8932.12	46.5	2
58		min	-107.294	93	8	-385.536	0	2	-249.459	93	8
59	SB22	max	155.813	0	8	385.541	93	2	9108.062	46.5	2
60		min	-29.03	93	4	-385.536	0	2	-67.494	93	4
61	SB12	max	-3.131	0	5	385.541	93	2	8421.215	46.5	2
62		min	-297.52	93	8	-385.536	0	2	-691.734	93	8
63	D2	max	1171.481	38.898	7	1.285	0	1	8.328	0	1
64		min	.956	0	8	-1.285	38.898	1	-4.164	19.449	1
65	D1	max	1395.935	39.327	7	1.287	0	1	8.435	39.327	1
66		min	8.737	0	6	-1.287	39.327	1	-4.217	19.664	1

Envelope Member Section Deflections Service

	Member	Sec		x [in]	LC	y [in]	LC	L/y' Ratio	LC
1	P34A	1	max	-.002	5	-.007	1	NC	1
2			min	-.012	2	-1.322	8	NC	1
3		2	max	-.002	5	-.007	1	NC	1
4			min	-.012	2	-1.369	8	379.898	8
5		3	max	-.002	5	-.007	1	NC	1
6			min	-.012	2	-1.418	8	186.695	8
7		4	max	-.002	5	-.007	1	NC	1
8			min	-.012	2	-1.468	8	123.471	8
9		5	max	-.002	5	-.007	1	NC	1
10			min	-.013	2	-1.516	8	92.7	8
11	P34B	1	max	-.002	5	-.007	1	NC	1
12			min	-.013	2	-1.516	8	NC	1
13		2	max	-.003	5	-.008	1	NC	1
14			min	-.013	2	-1.562	8	2682.069	8
15		3	max	-.003	5	-.008	1	NC	1
16			min	-.013	2	-1.605	8	1832.785	8
17		4	max	-.003	5	-.008	1	NC	1
18			min	-.013	2	-1.642	8	2244.28	8
19		5	max	-.003	5	-.008	1	NC	1
20			min	-.014	2	-1.674	8	NC	1
21	P33A	1	max	-.001	6	-.004	1	NC	1
22			min	-.008	2	-.807	8	NC	1
23		2	max	-.001	6	-.004	1	NC	1
24			min	-.008	2	-.871	8	283.287	8
25		3	max	-.001	6	-.005	1	NC	1
26			min	-.009	2	-.939	8	137.115	8
27		4	max	-.002	6	-.005	1	NC	1

Envelope Member Section Deflections Service (Continued)

	Member	Sec		x [in]	LC	y [in]	LC	L/y' Ratio	LC
28			min	-.009	2	-1.009	8	89.455	8
29		5	max	-.002	6	-.005	1	NC	1
30			min	-.01	2	-1.079	8	66.329	8
31	P33B	1	max	-.002	6	-.005	1	NC	1
32			min	-.01	2	-1.079	8	NC	1
33		2	max	-.002	6	-.006	1	NC	1
34			min	-.01	2	-1.147	8	2360.384	8
35		3	max	-.002	6	-.006	1	NC	1
36			min	-.011	2	-1.212	8	1566.544	8
37		4	max	-.002	6	-.006	1	NC	1
38			min	-.011	2	-1.271	8	1873.154	8
39		5	max	-.002	5	-.007	1	NC	1
40			min	-.012	2	-1.322	8	NC	1
41	P32A	1	max	0	6	-.001	1	NC	1
42			min	-.002	2	-.195	8	NC	1
43		2	max	0	6	-.001	1	NC	1
44			min	-.003	2	-.265	8	258.529	8
45		3	max	0	6	-.002	1	NC	1
46			min	-.004	2	-.342	8	123.121	8
47		4	max	0	6	-.002	1	NC	1
48			min	-.005	2	-.423	8	79.216	8
49		5	max	0	6	-.003	1	NC	1
50			min	-.005	2	-.506	8	58.023	8
51	P32B	1	max	0	6	-.003	1	NC	1
52			min	-.005	2	-.506	8	NC	1
53		2	max	0	6	-.003	1	NC	1
54			min	-.006	2	-.588	8	2569.022	8
55		3	max	0	6	-.003	1	NC	1
56			min	-.007	2	-.668	8	1636.33	8
57		4	max	-.001	6	-.004	1	NC	1
58			min	-.007	2	-.742	8	1895.989	8
59		5	max	-.001	6	-.004	1	NC	1
60			min	-.008	2	-.807	8	NC	1
61	P31	1	max	0	8	0	1	NC	1
62			min	0	1	0	1	NC	1
63		2	max	0	6	0	1	NC	1
64			min	0	2	-.051	8	5137.05	8
65		3	max	0	6	0	1	NC	1
66			min	-.001	2	-.101	8	3210.673	8
67		4	max	0	6	0	1	NC	1
68			min	-.002	2	-.15	8	3669.366	8
69		5	max	0	6	-.001	1	NC	1
70			min	-.002	2	-.195	8	NC	1
71	P25	1	max	-.002	6	.017	2	NC	1
72			min	-.015	7	-.252	7	NC	1
73		2	max	-.002	6	.017	8	NC	1
74			min	-.015	7	-.269	7	444.99	7
75		3	max	-.003	6	.018	8	NC	1
76			min	-.015	7	-.286	7	220.941	7
77		4	max	-.003	6	.018	8	NC	1
78			min	-.016	7	-.303	7	146.498	7
79		5	max	-.003	6	.018	8	NC	1
80			min	-.016	7	-.32	7	109.451	7
81	P24A	1	max	-.002	6	.018	2	NC	1
82			min	-.014	7	-.085	7	NC	1
83		2	max	-.002	6	.018	2	NC	1
84			min	-.014	7	-.099	7	881.775	7

Envelope Member Section Deflections Service (Continued)

	Member	Sec		x [in]	LC	y [in]	LC	L/y' Ratio	LC
85		3	max	-.002	6	.018	2	NC	1
86			min	-.014	7	-.115	7	403.114	7
87		4	max	-.002	6	.018	2	NC	1
88			min	-.015	7	-.134	7	248.806	7
89		5	max	-.002	6	.018	2	NC	1
90			min	-.015	7	-.154	7	174.55	7
91	P24B	1	max	-.002	6	.018	2	NC	1
92			min	-.015	7	-.154	7	NC	1
93		2	max	-.002	6	.018	2	NC	1
94			min	-.015	7	-.176	7	537.469	7
95		3	max	-.002	6	.018	2	NC	1
96			min	-.015	7	-.2	7	259.672	7
97		4	max	-.002	6	.017	2	NC	1
98			min	-.015	7	-.226	7	168.053	7
99		5	max	-.002	6	.017	2	NC	1
100			min	-.015	7	-.252	7	122.877	7
101	P23A	1	max	-.001	6	.012	2	NC	1
102			min	-.011	7	-.055	7	2106.942	7
103		2	max	-.001	6	.013	2	NC	1
104			min	-.011	7	-.05	7	4016.14	5
105		3	max	-.001	6	.014	2	NC	1
106			min	-.012	7	-.047	7	8414.039	5
107		4	max	-.001	6	.015	2	NC	1
108			min	-.012	7	-.045	7	NC	1
109		5	max	-.002	6	.016	2	NC	1
110			min	-.013	7	-.046	7	NC	1
111	P23B	1	max	-.002	6	.016	2	NC	1
112			min	-.013	7	-.046	7	NC	1
113		2	max	-.002	6	.017	2	NC	1
114			min	-.013	7	-.049	7	5502.759	7
115		3	max	-.002	6	.017	2	NC	1
116			min	-.013	7	-.057	7	1813.686	7
117		4	max	-.002	6	.018	2	NC	1
118			min	-.014	7	-.068	7	875.6	7
119		5	max	-.002	6	.018	2	NC	1
120			min	-.014	7	-.085	7	501.668	7
121	P22A	1	max	0	6	.002	2	NC	1
122			min	-.003	7	-.035	7	NC	1
123		2	max	0	6	.003	2	NC	1
124			min	-.004	7	-.051	7	2870.993	7
125		3	max	0	6	.005	2	NC	4
126			min	-.005	7	-.061	7	2269.446	7
127		4	max	0	6	.006	2	NC	4
128			min	-.006	7	-.067	7	3202.156	7
129		5	max	0	6	.007	2	NC	3
130			min	-.007	7	-.069	7	3965.28	2
131	P22B	1	max	0	6	.007	2	NC	1
132			min	-.007	7	-.069	7	NC	1
133		2	max	0	6	.008	2	NC	1
134			min	-.008	7	-.068	7	8549.759	7
135		3	max	0	6	.01	2	NC	1
136			min	-.009	7	-.064	7	7711.48	7
137		4	max	0	6	.011	2	NC	1
138			min	-.01	7	-.06	7	NC	1
139		5	max	-.001	6	.012	2	NC	1
140			min	-.011	7	-.055	7	NC	1
141	P21	1	max	0	8	0	1	NC	1

Envelope Member Section Deflections Service (Continued)

	Member	Sec		x [in]	LC	y [in]	LC	L/y' Ratio	LC
142			min	0	1	0	1	NC	1
143		2	max	0	6	0	2	NC	1
144			min	0	7	-.01	7	NC	1
145		3	max	0	6	0	2	NC	1
146			min	-.001	7	-.019	7	7619.489	7
147		4	max	0	6	.001	2	NC	1
148			min	-.002	7	-.027	7	8708.398	7
149		5	max	0	6	.002	2	NC	1
150			min	-.003	7	-.035	7	NC	1
151	P15	1	max	.003	3	.017	8	NC	1
152			min	-.013	2	-.256	7	NC	1
153		2	max	.003	3	.017	8	NC	1
154			min	-.013	2	-.271	7	481.664	7
155		3	max	.003	3	.017	8	NC	1
156			min	-.013	2	-.287	7	239.018	7
157		4	max	.003	3	.018	8	NC	1
158			min	-.013	2	-.303	7	158.417	7
159		5	max	.003	3	.018	8	NC	1
160			min	-.013	2	-.319	7	118.321	7
161	P14A	1	max	.004	3	.018	2	NC	1
162			min	-.011	2	-.083	7	NC	1
163		2	max	.004	3	.018	2	NC	1
164			min	-.012	2	-.098	7	768.389	7
165		3	max	.004	3	.018	2	NC	1
166			min	-.012	2	-.117	7	355.623	7
167		4	max	.003	3	.018	2	NC	1
168			min	-.012	2	-.137	7	222.304	7
169		5	max	.003	3	.018	2	NC	1
170			min	-.012	2	-.159	7	158.045	7
171	P14B	1	max	.003	3	.018	2	NC	1
172			min	-.012	2	-.159	7	NC	1
173		2	max	.003	3	.018	2	NC	1
174			min	-.012	2	-.182	7	515.904	7
175		3	max	.003	3	.018	2	NC	1
176			min	-.012	2	-.206	7	252.992	7
177		4	max	.003	3	.017	2	NC	1
178			min	-.012	2	-.231	7	166.397	7
179		5	max	.003	3	.017	8	NC	1
180			min	-.013	2	-.256	7	123.822	7
181	P13A	1	max	.003	3	.012	2	NC	1
182			min	-.008	2	-.052	7	1540.028	7
183		2	max	.003	3	.013	2	NC	1
184			min	-.008	2	-.047	7	2632.511	7
185		3	max	.003	3	.014	2	NC	1
186			min	-.009	2	-.042	7	5306.457	5
187		4	max	.003	3	.015	2	NC	1
188			min	-.009	2	-.039	7	NC	1
189		5	max	.003	3	.016	2	NC	1
190			min	-.01	2	-.039	7	NC	1
191	P13B	1	max	.003	3	.016	2	NC	1
192			min	-.01	2	-.039	7	NC	1
193		2	max	.003	3	.017	2	NC	1
194			min	-.01	2	-.042	7	6056.877	7
195		3	max	.003	3	.017	2	NC	1
196			min	-.011	2	-.05	7	1810.87	7
197		4	max	.003	3	.018	2	NC	1
198			min	-.011	2	-.063	7	828.541	7

Envelope Member Section Deflections Service (Continued)

	Member	Sec		x [in]	LC	y [in]	LC	L/y' Ratio	LC
199		5	max	.004	3	.018	2	NC	1
200			min	-.011	2	-.083	7	458.468	7
201	P12A	1	max	0	3	.002	2	NC	1
202			min	-.002	2	-.033	7	NC	1
203		2	max	0	3	.003	2	NC	1
204			min	-.002	2	-.048	7	3064.969	7
205		3	max	0	3	.005	2	NC	4
206			min	-.003	2	-.057	7	2416.318	7
207		4	max	.001	3	.006	2	NC	4
208			min	-.004	2	-.063	7	3399.527	7
209		5	max	.002	3	.007	2	NC	3
210			min	-.005	2	-.065	7	3769.599	2
211	P12B	1	max	.002	3	.007	2	NC	1
212			min	-.005	2	-.065	7	NC	1
213		2	max	.002	3	.009	2	NC	1
214			min	-.006	2	-.065	7	7770.423	7
215		3	max	.002	3	.01	2	NC	1
216			min	-.006	2	-.062	7	6639.311	7
217		4	max	.002	3	.011	2	NC	1
218			min	-.007	2	-.057	7	NC	1
219		5	max	.003	3	.012	2	NC	1
220			min	-.008	2	-.052	7	NC	1
221	P11	1	max	0	8	0	1	NC	1
222			min	0	1	0	1	NC	1
223		2	max	0	3	0	2	NC	1
224			min	0	2	-.009	7	NC	1
225		3	max	0	3	0	2	NC	1
226			min	0	2	-.017	7	8778.984	2
227		4	max	0	3	.001	2	NC	3
228			min	-.001	2	-.025	7	5813.972	2
229		5	max	0	3	.002	2	NC	3
230			min	-.002	2	-.033	7	4320.503	2
231	H4	1	max	.253	7	.003	3	NC	1
232			min	-.017	2	-.013	2	NC	1
233		2	max	.253	7	-.002	6	NC	1
234			min	-.017	2	-.034	7	813.073	7
235		3	max	.253	7	-.002	6	NC	1
236			min	-.017	2	-.042	7	711.478	7
237		4	max	.253	7	-.002	6	NC	1
238			min	-.017	2	-.033	7	1140.117	7
239		5	max	.253	7	-.002	6	NC	1
240			min	-.017	2	-.015	7	NC	1
241	H3	1	max	.083	7	.004	3	NC	1
242			min	-.018	2	-.011	2	NC	1
243		2	max	.083	7	.008	3	NC	1
244			min	-.018	2	-.012	2	2242.19	7
245		3	max	.084	7	.01	5	NC	1
246			min	-.018	2	-.012	2	1472.675	7
247		4	max	.084	7	.007	5	NC	1
248			min	-.018	2	-.012	2	1742.634	7
249		5	max	.084	7	-.002	6	NC	1
250			min	-.018	2	-.014	7	NC	1
251	H2	1	max	.053	7	.003	3	NC	1
252			min	-.012	2	-.008	2	NC	1
253		2	max	.053	7	.005	3	NC	1
254			min	-.012	2	-.007	2	3374.73	7
255		3	max	.053	7	.005	3	NC	1

Envelope Member Section Deflections Service (Continued)

	Member	Sec		x [in]	LC	y [in]	LC	L/y' Ratio	LC
256			min	-.012	2	-.007	2	2474.526	7
257		4	max	.054	7	.002	3	NC	1
258			min	-.012	2	-.007	2	3213.999	7
259		5	max	.054	7	-.001	6	NC	1
260			min	-.012	2	-.011	7	NC	1
261	H1	1	max	.033	7	0	3	NC	1
262			min	-.002	2	-.002	2	NC	1
263		2	max	.034	7	.01	7	NC	1
264			min	-.002	2	-.002	2	2157.753	7
265		3	max	.034	7	.015	7	NC	1
266			min	-.002	2	-.003	2	1431.745	7
267		4	max	.034	7	.012	7	NC	1
268			min	-.002	2	-.003	2	1707.915	7
269		5	max	.034	7	0	6	NC	1
270			min	-.002	2	-.003	7	NC	1
271	SB42	1	max	0	2	.007	2	NC	1
272			min	-1.667	8	-.005	4	NC	1
273		2	max	0	2	.084	2	4284.536	3
274			min	-1.667	8	.021	4	1242.062	2
275		3	max	0	2	.115	2	3077.579	4
276			min	-1.667	8	.033	4	885.287	2
277		4	max	0	2	.087	2	4423.458	4
278			min	-1.667	8	.025	3	1242.068	2
279		5	max	0	2	.021	8	NC	1
280			min	-1.667	8	.003	5	NC	1
281	SB32	1	max	.002	2	.006	2	NC	1
282			min	-1.316	8	-.011	8	NC	1
283		2	max	.002	2	.081	2	NC	5
284			min	-1.316	8	0	6	1256.582	2
285		3	max	.002	2	.113	2	NC	5
286			min	-1.316	8	.005	6	895.116	2
287		4	max	.002	2	.084	2	NC	5
288			min	-1.316	8	.005	5	1256.589	2
289		5	max	.002	2	.025	8	NC	1
290			min	-1.316	8	.003	5	NC	1
291	SB22	1	max	.004	2	.004	2	NC	1
292			min	-.801	8	-.018	8	NC	1
293		2	max	.004	2	.081	2	NC	5
294			min	-.801	8	-.001	6	1226.048	2
295		3	max	.004	2	.112	2	NC	5
296			min	-.801	8	.003	6	874.433	2
297		4	max	.004	2	.083	2	NC	5
298			min	-.801	8	.003	5	1226.054	2
299		5	max	.004	2	.027	8	NC	1
300			min	-.801	8	.002	5	NC	1
301	SB12	1	max	.006	2	.002	2	NC	1
302			min	-.191	8	-.021	8	NC	1
303		2	max	.006	2	.071	2	NC	5
304			min	-.191	8	-.002	6	1354.539	2
305		3	max	.006	2	.099	2	NC	5
306			min	-.191	8	.002	6	961.134	2
307		4	max	.006	2	.071	2	NC	5
308			min	-.19	8	.003	5	1354.547	2
309		5	max	.007	2	.023	8	NC	1
310			min	-.19	8	.001	5	NC	1
311	D2	1	max	.042	7	.053	7	NC	1
312			min	0	6	-.021	2	NC	1

Envelope Member Section Deflections Service (Continued)

	Member	Sec		x [in]	LC	y [in]	LC	L/y' Ratio	LC
313		2	max	.041	7	.049	7	NC	1
314			min	0	6	-.02	2	NC	1
315		3	max	.04	7	.045	7	NC	1
316			min	0	6	-.018	2	NC	1
317		4	max	.039	7	.042	7	NC	1
318			min	0	6	-.017	2	NC	1
319		5	max	.038	7	.038	7	NC	1
320			min	0	6	-.015	2	NC	1
321	D1	1	max	.026	7	.049	7	NC	1
322			min	0	6	-.014	2	NC	1
323		2	max	.025	7	.048	7	NC	1
324			min	0	6	-.011	2	NC	1
325		3	max	.023	7	.046	7	NC	1
326			min	0	6	-.009	2	NC	1
327		4	max	.022	7	.045	7	NC	1
328			min	0	6	-.006	2	NC	1
329		5	max	.02	7	.043	7	NC	1
330			min	0	6	-.003	2	NC	1

Envelope Beam Deflection Checks

Be...	Design Rule	Span	Defl [in]	Ratio	LC	Defl [in]	Ratio	LC	Defl [in]	Ratio	LC
No Data to Print ...											

Envelope AISI S100-12: LRFD Cold Formed Steel Code Checks

	Member	Shape	Code Check	Loc[in]	LC	Shear C...	Loc[in]	LC	Phi*Pn[lb]	Phi*Tn[lb]	Phi*Mn[lb-in]	Cb	Cm	Eqn
1	P32B	UA300x22...	.825	18	8	.123	0	8	19606.003	25294.5	19789.464	1	.85	C5.2.2-3
2	P32A	UA300x22...	.754	0	8	.124	0	8	19606.003	25294.5	19788.314	1	.85	C5.2.2-3
3	P33B	UA300x22...	.738	18	8	.098	0	8	19606.003	25294.5	19792.453	1	.85	C5.2.2-3
4	P31	UA300x22...	.621	12	8	.156	0	8	21679.519	25294.5	23091.602	1	.85	C5.2.2-3
5	P34B	UA300x22...	.553	18	8	.065	0	8	19606.003	25294.5	19795.365	1	.85	C5.2.2-3
6	P33A	UA300x22...	.495	0	8	.099	0	8	19606.003	25294.5	19788.127	1	.85	C5.2.2-3
7	P21	UA300x22...	.422	8	7	.043	0	7	23116.815	25294.5	14125.047	1	.85	C5.2.2-2
8	H4	FBA275x1...	.398	0	7	.022	24	7	10973.171	16087.5	3466.938	1	1	C3.3.2-1
9	P22A	UA300x22...	.350	0	7	.007	20.5	7	18806.333	25294.5	14125.047	1	.85	C5.2.2-1
10	P14A	UA300x22...	.289	0	7	.019	0	7	21158.482	25294.5	14125.047	1	.85	C5.2.2-3
11	P24A	UA300x22...	.284	0	7	.012	0	7	21158.482	25294.5	14125.047	1	.85	C5.2.2-3
12	P13B	UA300x22...	.263	20	7	.020	20	7	18972.248	25294.5	14125.047	1	.85	C3.3.2-1
13	P23B	UA300x22...	.253	20	7	.018	20	7	18972.248	25294.5	14125.047	1	.85	C5.2.2-3
14	P22B	UA300x22...	.240	0	7	.015	20	7	18972.248	25294.5	14125.047	1	.85	C5.2.2-1
15	P34A	UA300x22...	.239	0	8	.065	0	8	19606.003	25294.5	19787.646	1	.85	C5.2.2-3
16	D1	FBA275x1...	.205	39.327	7	.000	39.327	1	6862.243	16087.5	3261.322	1	1	C5.2.2-1
17	P24B	UA300x22...	.195	0	7	.012	0	7	21158.482	25294.5	14125.047	1	.85	C5.2.2-3
18	P12A	UA300x22...	.178	0	7	.007	20.5	7	18806.333	25294.5	14125.047	1	.85	C5.2.2-3
19	P11	UA300x22...	.175	8	7	.033	0	7	22451.452	25294.5	14125.047	1	.85	C5.2.2-3
20	H3	FBA275x1...	.171	24	7	.008	24	7	10973.171	16087.5	3466.938	1	1	C3.3.2-1
21	P23A	UA300x22...	.171	20	7	.007	20	7	18972.248	25294.5	14125.047	1	.85	C5.2.2-3
22	H1	FBA275x1...	.171	24	7	.008	24	7	10973.171	16087.5	3466.938	1	1	C3.3.2-1
23	D2	FBA275x1...	.170	38.898	7	.000	0	1	6981.746	16087.5	3271.555	1	1	C5.2.2-1
24	P14B	UA300x22...	.145	0	7	.019	0	7	21158.482	25294.5	14125.047	1	.85	C5.2.2-3
25	P13A	UA300x22...	.124	20	7	.010	20	7	18972.248	25294.5	14125.047	1	.85	C5.2.2-3
26	P12B	UA300x22...	.121	19.375	2	.014	20	7	18972.248	25294.5	14125.047	1	.85	C5.2.2-3
27	P25	UA300x22...	.101	0	7	.016	0	7	22527.606	25294.5	14125.047	1	.85	C5.2.2-3
28	P15	UA300x22...	.100	0	7	.016	0	7	22527.606	25294.5	14125.047	1	.85	C5.2.2-3
29	H2	FBA275x1...	.075	24	7	.002	24	7	10973.171	16087.5	7031.25	1	1	C5.1.2-1