PORTION OF SE QUARTER OF SEC 27, TWN 20 N, RGE. 4 E, W.M.
CITY OF PUYALLUP, PIERCE COUNTY, WASHINGTON

COVER SHEET
CIVIL PLANS

BASIS OF PLAN

THIS SITE PLAN IS BASED ON THE ALTA LAND TITLE SURVEY PREPARED BY BARGHAUSEN CONSULTING ENGINEERS, INC. (DATED AUGUST 9, 2022).
PROPOSED SITE IMPROVEMENTS WERE PROVIDED BY MACKENZIE ARCHITECTS (DATED 11-30-2023).

THE EXISTING CULTURAL AND TOPOGRAPHIC DATA SHOWN ON THESE DRAWINGS HAS BEEN PREPARED, IN PART, BASED UPON INFORMATION FURNISHED BY OTHERS. WHILE THIS INFORMATION IS BELIEVED TO BE RELIABLE, BCE, INC. CANNOT ENSURE ACCURACY AND THUS IS NOT RESPONSIBLE FOR THE ACCURACY OF THAT INFORMATION OR FOR ANY ERRORS OR OMISSIONS WHICH MAY HAVE BEEN INCORPORATED INTO THESE DRAWINGS AS A RESULT.
IT IS THE CONTRACTOR'S RESPONSIBILITY TO COORDINATE WITH THE OWNER TO HAVE ALL IMPROVEMENTS FIELD VERIFIED PRIOR TO CONSTRUCTION. DISCREPANCIES SHALL BE BROUGHT TO THE ATTENTION OF BARGHAUSEN CONSULTING ENGINEERS, INC. PRIOR TO WORK.

SURVEY INFORMATION

TITLE REPORT INFORMATION

TITLE COMMITMENT:
ALL TITLE INFORMATION SHOWN ON THIS MAP, INCLUDING APPURTENANT EASEMENTS AND ADJOINING DEEDS FOR UNPLATTED LOTS, IF ANY, HAS BEEN EXTRACTED FROM FIRST AMERICAN TITLE INSURANCE COMPANY ALTA COMMITMENT NO. NCS-1133990-CHI2, DATED JUNE 3, 2022 AT 7:30 AM. IN PREPARING THIS MAP, BARGHAUSEN CONSULTING ENGINEERS, INC. HAS CONDUCTED NO INDEPENDENT TITLE SEARCH NOR IS BARGHAUSEN CONSULTING ENGINEERS, INC. AWARE OF ANY TITLE ISSUES AFFECTING THE SURVEYED PROPERTY OTHER THAN THOSE SHOWN ON THE MAP AND DISCLOSED BY SAID COMMITMENT. BARGHAUSEN CONSULTING ENGINEERS, INC. HAS RELIED WHOLLY ON SAID TITLE COMPANY'S REPRESENTATIONS OF THE TITLE'S CONDITION TO PREPARE THIS SURVEY AND THEREFORE BARGHAUSEN CONSULTING ENGINEERS, INC. QUALIFIES THE MAP'S ACCURACY AND COMPLETENESS TO THAT EXTENT.

LEGAL DESCRIPTION: (PER ABOVE REFERENCED TITLE REPORT)

PARCEL "A"
THAT PORTION OF BLOCKS 34 TO 37, INCLUSIVE, OF REPLAT OF A PART OF FRANK R. SPINNING'S FIRST ADDITION TO THE TOWN OF PUYALLUP, PIERCE COUNTY, WASHINGTON, ACCORDING TO PLAT RECORDED IN BOOK 6 OF PLATS AT PAGE(S) 91, LYING NORTHERLY OF THE NORTHERN PACIFIC RAILWAY COMPANY RIGHT OF WAY, IN PUYALLUP, PIERCE COUNTY, WASHINGTON.

TOGETHER WITH THE SOUTH 30 FEET OF VACATED PIONEER AVENUE ABUTTING BLOCKS 34 AND 35 AS VACATED BY CITY OF PUYALLUP ORDINANCE NO. 211 RECORDED FEBRUARY 14, 1902 UNDER AUDITOR'S NO. 146161.

PARCEL "B"
A PARCEL OF LAND SITUATED WITHIN THE SOUTHEAST QUARTER OF SECTION 27, TOWNSHIP 20 NORTH, RANGE 4 EAST OF THE WILLAMETTE MERIDIAN, IN PIERCE COUNTY, WASHINGTON, DESCRIBED AS FOLLOWS:

BEGINNING AT THE SOUTHEAST CORNER OF BLOCK 33 OF REPLAT OF A PART OF FRANK R. SPINNING'S FIRST ADDITION TO THE TOWN OF PUYALLUP, PIERCE COUNTY, WASHINGTON, ACCORDING TO PLAT RECORDED IN BOOK 6 OF PLATS AT PAGE 91;
THENCE NORTH 00°50' WEST 28.58 FEET ALONG THE EAST LINE OF SAID BLOCK 33;
THENCE SOUTH 14°18'45" WEST 27.61 FEET TO A POINT ON THE SOUTH LINE OF SAID BLOCK 33;
THENCE SOUTH 75°49' EAST 7.47 FEET ALONG SAID SOUTH LINE TO THE POINT OF BEGINNING, IN PUYALLUP, PIERCE COUNTY, WASHINGTON.

PARCEL "C"
THAT PORTION OF THE SOUTHEAST OF SECTION 27, TOWNSHIP 20 NORTH, RANGE 4 EAST OF THE WILLAMETTE MERIDIAN, IN PIERCE COUNTY, WASHINGTON, DESCRIBED AS FOLLOWS:

COMMENCING AT THE SECTION CORNER COMMON TO SECTIONS 26, 27, 34 AND 35, ALL IN SAID TOWNSHIP 20 NORTH, RANGE 4 EAST;
THENCE NORTHERLY ALONG THE SECTION LINE COMMON TO SAID SECTIONS 26 AND 27, A DISTANCE OF 1578.0 FEET, MORE OR LESS, TO THE POINT OF INTERSECTION WITH A LINE DRAWN PARALLEL WITH AND DISTANT 51.13 FEET NORTHERLY OF, AS MEASURED AT RIGHT ANGLES TO, BURLINGTON NORTHERN RAILROAD COMPANY'S MAIN TRACK CENTERLINE, AS NOW LOCATED AND CONSTRUCTED;
THENCE NORTHWESTERLY DEFLECTING 74°59 TO THE LEFT FROM SAID SECTION LINE, ALONG SAID LINE LYING 51.13 FEET NORTHERLY OF AND PARALLEL WITH SAID MAIN TRACT CENTERLINE, A DISTANCE OF 493.0 FEET, MORE OR LESS, TO THE POINT OF INTERSECTION WITH THE WEST RIGHT OF WAY LINE OF FIFTEENTH STREET SOUTHEAST, AS NOW LOCATED IN THE CITY OF PUYALLUP, WASHINGTON SAID POINT BEING THE TRUE POINT OF BEGINNING OF THE PARCEL TO BE DESCRIBED;
THENCE CONTINUING NORTHWESTERLY ALONG SAID PARALLEL LINE, 920.0 FEET, MORE OR LESS, TO THE POINT OF INTERSECTION WITH A LINE DRAWN PARALLEL WITH AND DISTANT 8.50 FEET NORTHERLY OF, AS MEASURED AT RIGHT ANGLES TO, THE MOST NORTHERLY SPUR TRACT OF SAID BURLINGTON NORTHERN RAILROAD COMPANY, AS NOW LOCATED AND CONSTRUCTED;
THENCE NORTHERLY, PARALLEL WITH THE WEST LINE OF BLOCK 32 OF REPLAT OF A PART OF FRANK R. SPINNING'S FIRST ADDITION TO THE TOWN OF PUYALLUP, ACCORDING TO PLAT RECORDED IN BOOK 6 OF PLATS AT PAGE 91, A DISTANCE OF 148.0 FEET;
THENCE NORTHWESTERLY, PARALLEL WITH SAID SAID LINE LYING 51.13 FEET NORTHERLY OF SAID RAILROAD COMPANY'S MAIN TRACT CENTERLINE, A DISTANCE OF 40.0 FEET;
THENCE NORTHERLY, PARALLEL WITH SAID WEST LINE OF BLOCK 32, 106.0 FEET TO THE POINT OF INTERSECTION WITH A LINE DRAWN PARALLEL WITH AND DISTANT 300.0 FEET NORTHERLY OF, AS MEASURED AT RIGHT ANGLES TO, SAID MAIN TRACT CENTERLINE;
THENCE EASTERLY ALONG SAID PARALLEL LINE, 946.0 FEET, MORE OR LESS, TO THE POINT OF INTERSECTION WITH THE WEST RIGHT OF WAY LINE OF FIFTEENTH STREET SOUTHEAST;
THENCE SOUTHERLY ALONG SAID WEST RIGHT OF WAY LINE TO THE TRUE POINT OF BEGINNING, IN PIERCE COUNTY, WASHINGTON.

HORIZONTAL DATUM:
NAD 83/11
PER WSDOT PUBLISHED MONUMENTS. WSDOT CONTROL POINT "GP 27512-100" WAS HELD FOR POSITION, AND A LINE BETWEEN SAID POINT "GP 27512-100" AND CONTROL POINT "GP27512-18AZ" WAS HELD FOR ROTATION, BEING SOUTH 38°23'07" WEST.

VERTICAL DATUM:
NAVD88
VERTICAL CONTROL PUBLISHED BY WSDOT, POINT "GP 27512-100" WAS HELD FOR ELEVATION.
BENCHMARK ELEVATION = 81.27'

SITE BENCHMARK:
SET MAGNAIL & WASHER #49 IN THE SIDEWALK ON THE WEST SIDE OF 15TH STREET S.E.
ELEVATION =55.16' (NAVD 88)

SOILS REPORT NOTES

1. THE FOLLOWING SOILS REPORTS/ASSESSMENTS WERE PREPARED FOR THE SITE:
   GEOTECHNICAL REPORT, PROJECT NO. T-8661 DATED: JAN 12TH 2022:

   240 - 15TH STREET SE INDUSTRIAL
   240 - 15TH STREET SE
   PUYALLUP, WASHINGTON

   PREPARED BY:
   TERRA ASSOCIATES, INC.
   12220 113TH AVENUE NE, STE. 130
   KIRKLAND, WASHINGTON 98034

2. IT SHALL BE THE RESPONSIBILITY OF THE CONTRACTOR TO ENSURE THAT ALL PROVISIONS OF THE SOILS REPORT FOR THE SITE BE OBSERVED AND COMPLIED WITH DURING ALL PHASES OF THE SITE PREPARATION, GRADING OPERATIONS, AND PAVING CONSTRUCTION.

3. ANY PROVISIONS OF THE SOILS REPORT WHICH CONFLICT WITH INFORMATION SHOWN ELSEWHERE ON THESE DRAWINGS, OR WHICH REQUIRE FURTHER CLARIFICATION, SHALL BE BROUGHT TO THE ATTENTION OF BARGHAUSEN ENGINEERS.

4. A REPRESENTATIVE FOR THE SOILS ENGINEER SHALL BE AVAILABLE TO OBSERVE AND APPROVE THE EARTHWORK OPERATIONS AND TO VERIFY FIELD CONDITIONS AS WORK PROCEEDS. THE SOILS ENGINEER SHALL SUBMIT FIELD REPORTS CERTIFYING THAT THE METHODS AND MATERIALS OF THE EARTHWORK OPERATIONS WERE IN ACCORDANCE WITH THE RECOMMENDATION OF THE SOILS INVESTIGATION AND THAT THE WORK WAS PERFORMED TO THE SATISFACTION OF THE ENGINEER. THE CONTRACTOR SHALL MAKE ALL PROVISIONS FOR SOILS INSPECTIONS AS RECOMMENDED WITHIN SOILS REPORT AS A MINIMUM, THIS INCLUDES THE OBSERVATION OF THE FOLLOWING BY A SOILS ENGINEER: UTILITY TRENCH EXCAVATIONS, UTILITY PIPE BEDDING, SUBGRADE STABILITY, FOOTING SUBGRADE CONDITIONS, STRUCTURAL FILL OBSERVATIONS AND TESTING, SITE DRAINAGE MEASURES AND OBSERVATIONS, PAVEMENT SUBGRADE OBSERVATIONS, EROSION CONTROL, SITE STABILITY INCLUDING TEMPORARY AND PERMANENT SLOPES.

5. THE SOILS ENGINEER SHOULD BE NOTIFIED AT LEAST FIVE (5) WORKING DAYS PRIOR TO ANY SITE CLEARING OR GRADING.

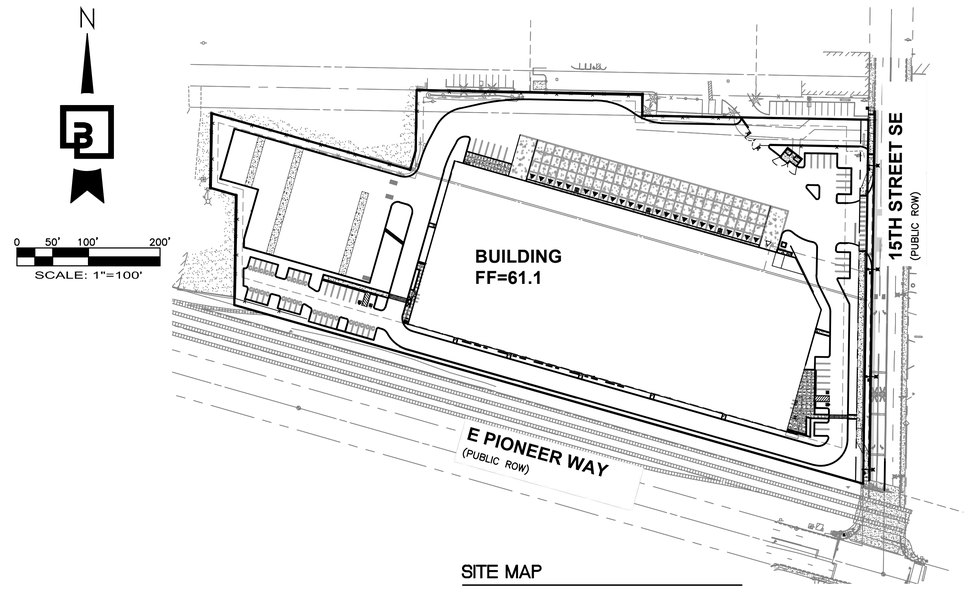

SITE MAP
1"=100'

INDEX OF SHEETS:

CIVIL SET

C1 COVER SHEET
C2 CONSTRUCTION NOTES
C3 CIVIL TESC AND DEMOLITION PLAN
C4 SITE PLAN
C5 SITE PLAN
C6 SITE PLAN
C7 GRADING AND STORM DRAINAGE PLAN
C8 GRADING AND STORM DRAINAGE PLAN
C9 GRADING AND STORM DRAINAGE PLAN
C10 GRADING DETAILS
C11 GRADING DETAILS
C12 VAULT DETAILS
C13 VAULT DETAILS
C14 WATER AND SANITARY SEWER PLAN
C15 WATER AND SANITARY SEWER PLAN
C16 WATER AND SANITARY SEWER PLAN
C17 RIGHT-OF-WAY DEMOLITION PLAN
C18 FRONTAGE IMPROVEMENT PLAN
C19 CHANNELIZATION PLAN
C20 SITE SECTIONS
C21 EROSION CONTROL DETAILS
C22 EROSION CONTROL DETAILS
C23 CONSTRUCTION DETAILS
C24 CONSTRUCTION DETAILS
C25 CONSTRUCTION DETAILS
C26 CONSTRUCTION DETAILS
C27 CONSTRUCTION DETAILS
C28 CONSTRUCTION DETAILS
C29 CONSTRUCTION DETAILS
C30 CONSTRUCTION DETAILS
C31 CONSTRUCTION DETAILS
C32 CONSTRUCTION DETAILS
C33 CITY NOTES
C34 FIRE LANE MARKING PLAN

ILLUMINATION SET

1 ILLUMINATION PLAN
2 ILLUMINATION DETAILS

LANDSCAPE SET

L0.01 LANDSCAPE GENERAL INFORMATION
L1.10 PLANTING PLAN EAST
L1.11 PLANTING PLAN CENTRAL
L1.12 PLANTING PLAN WEST
L1.20 MATERIALS AND LAYOUT PLAN
L5.10 SITE DETAILS
L5.11 SOIL DETAILS
L5.12 IRRIGATION DETAILS
L5.13 PLANTING DETAILS
L5.14 STREET PLANTING DETAILS

UTILITY CONFLICT NOTE:

CAUTION:
THE CONTRACTOR SHALL BE RESPONSIBLE FOR VERIFYING THE LOCATION, DIMENSION, AND DEPTH OF ALL EXISTING UTILITIES WHETHER SHOWN ON THESE PLANS OR NOT BY POTHOLING THE UTILITIES AND SURVEYING THE HORIZONTAL AND VERTICAL LOCATION PRIOR TO CONSTRUCTION. THIS SHALL INCLUDE CALLING UTILITY LOCATE @ 811 AND THEN POTHOLING ALL OF THE EXISTING UTILITIES AT LOCATIONS OF NEW UTILITY CROSSINGS TO PHYSICALLY VERIFY WHETHER OR NOT CONFLICTS EXIST. LOCATIONS OF SAID UTILITIES AS SHOWN ON THESE PLANS ARE BASED UPON THE UNVERIFIED PUBLIC INFORMATION AND ARE SUBJECT TO VARIATION. IF CONFLICTS SHOULD OCCUR, THE CONTRACTOR SHALL CONSULT BARGHAUSEN CONSULTING ENGINEERS, INC. TO RESOLVE ALL PROBLEMS PRIOR TO PROCEEDING WITH CONSTRUCTION.

CONTRACTOR SHALL BE FULLY RESPONSIBLE FOR OBTAINING PERMITS FROM THE WASHINGTON STATE DEPARTMENT OF NATURAL RESOURCES FOR REMOVING AND REPLACING ALL SURVEY MONUMENTATION THAT MAY BE AFFECTED BY CONSTRUCTION ACTIVITY, PURSUANT TO WAC 332-120. APPLICATIONS MUST BE COMPLETED BY A REGISTERED LAND SURVEYOR. APPLICATIONS FOR PERMITS TO REMOVE MONUMENTS MAY BE OBTAINED FROM THE WASHINGTON STATE DEPARTMENT OF NATURAL RESOURCES, OR BY CONTACTING THEIR OFFICE BY TELEPHONE AT (360) 902-1190.

WASHINGTON STATE DEPARTMENT OF NATURAL RESOURCES
PUBLIC LAND SURVEY OFFICE
801 88th AVE S.E.
OLYMPIA, WASHINGTON 98501-7019

UPON COMPLETION OF CONSTRUCTION, ALL MONUMENTS DISPLACED, REMOVED, OR DESTROYED SHALL BE REPLACED BY A REGISTERED LAND SURVEYOR, AT THE COST AND AT THE DIRECTION OF THE CONTRACTOR, PURSUANT TO THESE REGULATIONS. THE APPROPRIATE FORMS FOR REPLACEMENT OF SAID MONUMENTATION SHALL ALSO BE THE RESPONSIBILITY OF THE CONTRACTOR.

TAX PARCEL NUMBERS

7845000161, 7845000170, 0420274126

ZONING

ML - LIMITED MANUFACTURING

OWNER/APPLICANT

CREF3 PUYALLUP OWNER LLC
11611 SAN VICENTE BLVD, 10TH FLOOR
LOS ANGELES, CA 90049

CIVIL ENGINEERING CONSULTANT:

BARGHAUSEN CONSULTING ENGINEERS
18215 72ND AVENUE SOUTH
KENT, WA. 98032
(425) 251-6222
(425) 251-8782 (FAX)
JASON HUBBELL
EMAIL: jhubbell@barghausen.com

SITE SURVEY CONSULTANT:

BARGHAUSEN CONSULTING ENGINEERS
18215 72ND AVENUE SOUTH
KENT, WA. 98032
(425) 251-6222
(425) 251-8782 (FAX)
RYAN LEE

PROJECT INFO:

TOTAL SITE AREA= 346,555 SF
TOTAL IMPERVIOUS AREA= 289,069 SF (83.4%)
TOTAL PERVIOUS AREA= 57,486 SF (16.6%)

UTILITIES/SERVICES

STORM/SEWER/WATER:
CITY OF PUYALLUP ~~WATER DIVISION~~
1100 39TH AVE. SE
PUYALLUP, WA 98374
(253) 841-5505

POWER:
PUGET SOUND ENERGY
8001 SOUTH 212TH STREET
KENT, WA 98032
(253) 395-7065

GAS:
PUGET SOUND ENERGY
8001 SOUTH 212TH STREET
KENT, WA 98032
(253) 395-7065

Replace "Water Division" with "Public Works" [civils, 1]

ESTIMATED EARTHWORK VOLUMES:

(FOR PERMITTING ONLY. NOT FOR BID PURPOSES)
EARTHWORK, STRIPPING EXPORT = 0
ON-SITE CUT = 7,000 CY
ON-SITE FILL = 7,000 CY
EARTHWORK, STRUCTURAL IMPORT = 000 CY

HORIZONTAL CONTROL / SURVEY NOTE:

1. CONTRACTOR SHALL OBTAIN SERVICES OF A LICENSED LAND SURVEYOR TO STAKE HORIZONTAL AND VERTICAL CONTROL FOR ALL NEW IMPROVEMENTS. CONTRACTOR SHALL CONTACT BARGHAUSEN CONSULTING ENGINEERS, INC. TO OBTAIN ELECTRONIC CAD FILES FOR STAKING PURPOSES.

2. UNDERGROUND UTILITIES AND FEATURES DEPICTED HERON ARE BASED ON FIELD OBSERVATION, MARKINGS, DEVELOPMENT PLANS, AND/OR BEST AVAILABLE RECORD DOCUMENTS ONLY. CONTRACTOR SHALL FIELD VERIFY SIZE AND TYPE OF EXISTING UTILITIES PRIOR TO CONSTRUCTION. DISCREPANCIES SHALL BE BROUGHT TO THE ATTENTION OF BARGHAUSEN CONSULTING ENGINEERS, INC. PRIOR TO WORK.

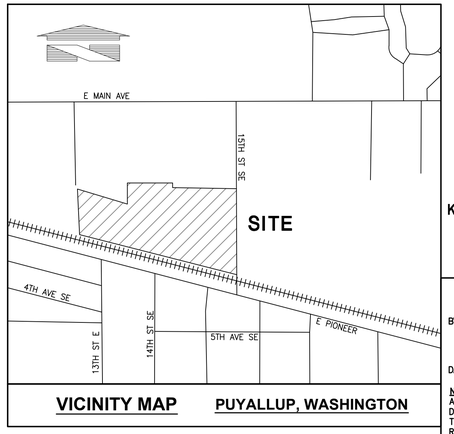

VICINITY MAP PUYALLUP, WASHINGTON

SITE ADDRESS

240 15TH STREET SE
PUYALLUP, WA 98372

811 Know what's **below.** **Call** before you dig.

APPROVED

BY _____
CITY OF PUYALLUP
DEVELOPMENT ENGINEERING

DATE _____

NOTE: THIS APPROVAL IS VOID AFTER 180 DAYS FROM APPROVAL DATE.
THE CITY WILL NOT BE RESPONSIBLE FOR ERRORS AND/OR OMISSIONS ON THESE PLANS.
FIELD CONDITIONS MAY DICTATE CHANGES TO THESE PLANS AS DETERMINED BY THE DEVELOPMENT ENGINEERING MANAGER.

No.	Date	By	Ckd.	Appr.	Revision
3	10/03/24	DL	DL	JSG	RESPONSE TO CITY COMMENTS, DATED APRIL 12, 2024
2	03/05/24	DL	DL	JSG	RESPONSE TO CITY COMMENTS, DATED FEBRUARY 06, 2024

Title: COVER SHEET
CIVIL PLANS
FORTRESS - PUYALLUP

For: CREF3 PUYALLUP OWNER LLC
11611 SAN VICENTE BLVD
10TH FLOOR
LOS ANGELES, CA 90049

JASON GUY HUBBELL — STATE OF WASHINGTON — 38950 — REGISTERED PROFESSIONAL ENGINEER
10/03/2024

Scale: Horizontal 1"=100' Vertical N/A

Designed DL Drawn RDC Checked DL Approved JGH Date 6/23/23

Barghausen Consulting Engineers, Inc.
18215 72nd Avenue South
Kent, WA 98032
425.251.6222 barghausen.com

Job Number 22085 Sheet C1 of 34

P:\22000s\22085\engineering\22085-0.dwg 4/30/2024 1:29 PM RCox

PORTION OF SE QUARTER OF SEC 27, TWN 20 N, RGE. 4 E, W.M.
CITY OF PUYALLUP, PIERCE COUNTY, WASHINGTON

NOTES AND LEGEND

GENERAL SITE NOTES:

1. THE CONTRACTOR SHALL OBTAIN AND HAVE AVAILABLE COPIES OF THE APPLICABLE GOVERNING AGENCY STANDARDS AT THE JOB SITE DURING THE RELATED CONSTRUCTION OPERATIONS.

2. CONTRACTOR SHALL ENSURE THAT ALL NECESSARY PERMITS HAVE BEEN OBTAINED PRIOR TO COMMENCING WORK.

3. THE CONTRACTOR SHALL BE RESPONSIBLE FOR VERIFYING THE LOCATION, DIMENSION AND DEPTH OF ALL EXISTING UTILITIES PRIOR TO CONSTRUCTION WHETHER SHOWN ON THESE PLANS OR NOT. UTILITIES OTHER THAN THOSE SHOWN MAY EXIST ON THIS SITE. ONLY THOSE UTILITIES WITH EVIDENCE OF THEIR INSTALLATION VISIBLE AT GROUND SURFACE OR SHOWN ON RECORD DRAWING PROVIDED BY OTHERS ARE SHOWN HEREON. EXISTING UNDERGROUND UTILITY LOCATIONS SHOWN ARE APPROXIMATE ONLY AND ARE SUBJECT TO A DEGREE OF UNKNOWN VARIATION. SOME UNDERGROUND LOCATIONS SHOWN HEREON MAY HAVE BEEN TAKEN FROM PUBLIC RECORDS. BARGHAUSEN CONSULTING ENGINEERS, INC. ASSUMES NO LIABILITY FOR THE ACCURACY OF PUBLIC RECORDS OR RECORDS OF OTHERS. IF CONFLICTS SHOULD OCCUR, THE CONTRACTOR SHALL CONSULT BARGHAUSEN CONSULTING ENGINEERS, INC. TO RESOLVE ALL PROBLEMS PRIOR TO PROCEEDING WITH CONSTRUCTION.

4. IT IS THE RESPONSIBILITY OF THE CONTRACTOR TO REVIEW ALL OF THE DRAWINGS AND SPECIFICATIONS ASSOCIATED WITH THE PROJECT WORK SCOPE PRIOR TO THE INITIATION OF CONSTRUCTION. SHOULD THE CONTRACTOR FIND A CONFLICT WITH THE DOCUMENTS RELATIVE TO THE SPECIFICATIONS OR THE RELATIVE CODES, IT IS THE CONTRACTOR'S RESPONSIBILITY TO NOTIFY THE PROJECT ENGINEER OF RECORD IN WRITING PRIOR TO THE START OF CONSTRUCTION. FAILURE BY THE CONTRACTOR TO NOTIFY THE PROJECT ENGINEER SHALL CONSTITUTE ACCEPTANCE OF FULL RESPONSIBILITY BY THE CONTRACTOR TO COMPLETE THE SCOPE OF WORK AS DEFINED BY THE DRAWINGS AND IN FULL COMPLIANCE WITH LOCAL REGULATIONS AND CODES.

5. IT SHALL BE THE CONTRACTOR'S RESPONSIBILITY TO NOTIFY THE APPROPRIATE UTILITIES INVOLVED PRIOR TO CONSTRUCTION.

6. INSPECTION OF SITE WORK WILL BE ACCOMPLISHED BY A REPRESENTATIVE OF THE GOVERNING JURISDICTION. INSPECTION OF PRIVATE FACILITIES WILL BE ACCOMPLISHED BY A REPRESENTATIVE OF THE OWNER. IT SHALL BE THE CONTRACTOR'S RESPONSIBILITY TO NOTIFY THE INSPECTOR 24 HOURS IN ADVANCE OF BACKFILLING ALL CONSTRUCTION.

7. PRIOR TO ANY CONSTRUCTION OR DEVELOPMENT ACTIVITY THE CONTRACTOR SHALL CONTACT THE AGENCY AND/OR UTILITY INSPECTION PERSONNEL AND ARRANGE ANY REQUIRED PRE-CONSTRUCTION MEETING(S). CONTRACTOR SHALL PROVIDE ONE WEEK MINIMUM ADVANCE NOTIFICATION TO OWNER, FIELD ENGINEER AND ENGINEER OF PRE-CONSTRUCTION MEETINGS.

8. THE CONTRACTOR IS RESPONSIBLE FOR WORKER AND SITE SAFETY AND SHALL COMPLY WITH THE LATEST OSHA STANDARDS AND REGULATIONS, OR ANY OTHER AGENCY HAVING JURISDICTION FOR EXCAVATION AND TRENCHING PROCEDURES. THE CONTRACTOR IS RESPONSIBLE FOR DETERMINING THE "MEANS AND METHODS" REQUIRED TO MEET THE INTENT AND PERFORMANCE CRITERIA OF OSHA, AS WELL AS ANY OTHER ENTITY THAT HAS JURISDICTION FOR EXCAVATION AND/OR TRENCHING PROCEDURES.

9. THE CONTRACTOR SHALL BE RESPONSIBLE FOR PROVIDING ADEQUATE SAFEGUARDS, SAFETY DEVICES, PROTECTIVE EQUIPMENT, FLAGGERS, AND ANY OTHER NEEDED ACTIONS TO PROTECT THE LIFE, HEALTH, AND SAFETY OF THE PUBLIC, AND TO PROTECT PROPERTY IN CONNECTION WITH THE PERFORMANCE OF WORK COVERED BY THE CONTRACTOR. ANY WORK WITHIN THE TRAVELED RIGHT-OF-WAY THAT MAY INTERRUPT NORMAL TRAFFIC FLOW SHALL REQUIRE AT LEAST ONE FLAGGER FOR EACH LANE OF TRAFFIC AFFECTED.

10. PROTECTIVE MEASURES SHALL BE TAKEN BY THE CONTRACTOR TO PROTECT ALL ADJACENT PUBLIC AND PRIVATE PROPERTIES AT ALL TIMES DURING CONSTRUCTION. THE CONTRACTOR SHALL BE RESPONSIBLE FOR PROTECTION OF ALL EXISTING UTILITY SERVICES THAT ARE TO REMAIN OPERATIONAL WITHIN THE CONSTRUCTION AREA WHETHER SHOWN OR NOT SHOWN ON THE PLANS.

11. TWO (2) COPIES OF THESE APPROVED PLANS MUST BE ON THE JOB SITE WHENEVER CONSTRUCTION IS IN PROGRESS. ONE (1) SET WITH RECORDS OF AS-BUILT INFORMATION SHALL BE SUBMITTED TO BARGHAUSEN CONSULTING ENGINEERS, INC. AT COMPLETION OF PROJECT.

12. CONTRACTOR SHALL OBTAIN SERVICES OF A LICENSED LAND SURVEYOR TO STAKE HORIZONTAL CONTROL FOR ALL NEW IMPROVEMENTS. STAKING CONTROL SHALL BE TAKEN FROM ELECTRONIC PLAN FILES PROVIDED BY BARGHAUSEN CONSULTING ENGINEERS, INC.

13. CONTRACTOR SHALL REQUEST FROM BARGHAUSEN CONSULTING ENGINEERS, INC., PRIOR TO ANY CONSTRUCTION STAKING OR CONSTRUCTION WORK, A FORMAL CONSTRUCTION RELEASE PLAN SET OR SPECIFIC RELEASE IN WRITING. THE APPROVED AGENCY PERMIT DRAWINGS WILL NOT BE CONSIDERED CONSTRUCTION RELEASE PLANS BY BARGHAUSEN CONSULTING ENGINEERS, INC. UNLESS BARGHAUSEN CONSULTING ENGINEERS, INC. HAS GIVEN A FORMAL WRITTEN RELEASE OR ISSUED A CONSTRUCTION RELEASE PLAN SET.

CONSTRUCTION SEQUENCE

1. HOLD A PRECONSTRUCTION MEETING WITH THE CITY AND OBTAIN REQUIRED PERMITS.
2. INSPECT AND MAINTAIN TEMPORARY CONSTRUCTION ENTRANCE.
3. INSPECT AND MAINTAIN PERIMETER DITCHES, SILT FENCES, AND OTHER EROSION CONTROL DEVICES AS SHOWN.
4. INSPECT AND MAINTAIN PROTECTION DEVICES FOR CRITICAL AREAS AND SIGNIFICANT TREES.
5. SCHEDULE AN EROSION CONTROL INSPECTION WITH THE CITY.
6. CONSTRUCT STORM DRAINAGE RETENTION/DETENTION (CONTROL AND STORAGE) FACILITIES. PROVIDE EMERGENCY OVERFLOW AS APPLICABLE.
7. ALL DITCHES AND SWALES AS SHOWN SHALL BE PROVIDED TO DIRECT ALL SURFACE WATER TO THE RETENTION/DETENTION AND SEDIMENTATION POND AS CLEARING AND GRADING PROGRESSES. NO UNCONTROLLED SURFACE WATER SHALL BE ALLOWED TO LEAVE THE SITE OR BE DISCHARGED TO A CRITICAL AREA AT ANY TIME DURING THE GRADING OPERATIONS.
9. GRADE SITE AND INSTALL UTILITIES PER PLANS.
10. INSTALL LANDSCAPING AND PAVING
11. INSPECT AND MAINTAIN ALL BMP'S UNTIL SITE IS STABILIZED

Typo

LEGEND:

- EXISTING TYPE II CATCH BASIN
- EXISTING TYPE I CATCH BASIN
- PROPOSED TYPE II CATCH BASIN
- PROPOSED TYPE I CATCH BASIN
- EXISTING TYPE II CATCH BASIN
- EXISTING TYPE I CATCH BASIN
- PROPOSED STORM DRAINAGE LINE
- EXISTING STORM DRAINAGE LINE
- PROPOSED SANITARY SEWER LINE (SS)
- PROPOSED SANITARY SEWER MANHOLE
- EXISTING SANITARY SEWER MANHOLE
- EXISTING SANITARY SEWER LINE (SS)
- EXISTING WATERMAIN (W)
- EXISTING FIRE HYDRANT
- EXISTING WATER VALVE
- PROPOSED WATERMAIN (W)
- PROPOSED FIRE HYDRANT
- PROPOSED WATER VALVE
- PROPOSED SPOT ELEVATIONS (23.24)
- EXISTING SPOT ELEVATIONS (67.81)
- EXISTING STREET LIGHT
- EXISTING SIGN
- EXISTING CONTOURS (100)
- PROPOSED CONTOURS (100)
- PROPOSED ASPHALT PAVEMENT
- PROPOSED CONCRETE

APPROVED

BY _____
CITY OF PUYALLUP
DEVELOPMENT ENGINEERING

DATE _____

NOTE: THIS APPROVAL IS VOID AFTER 180 DAYS FROM APPROVAL DATE.
THE CITY WILL NOT BE RESPONSIBLE FOR ERRORS AND/OR OMISSIONS ON THESE PLANS.
FIELD CONDITIONS MAY DICTATE CHANGES TO THESE PLANS AS DETERMINED BY THE DEVELOPMENT ENGINEERING MANAGER.

No.	Date	By	Ckd.	Appr.	Revision
3	10/03/24	DL	DL	JSG	RESPONSE TO CITY COMMENTS, DATED APRIL 12, 2024
2	03/05/24	DL	DL	JSG	RESPONSE TO CITY COMMENTS, DATED FEBRUARY 06, 2024

Title: **NOTES AND LEGEND**

FORTRESS - PUYALLUP

For: **CREF3 PUYALLUP OWNER LLC**
11611 SAN VICENTE BLVD
10TH FLOOR
LOS ANGELES, CA 90049

JASON GUY HUBBELL — STATE OF WASHINGTON — 38950 — REGISTERED PROFESSIONAL ENGINEER

10/03/2024

Scale: Horizontal NA Vertical N/A

Designed DL Drawn RDC Checked DL Approved JGH Date 6/23/23

Barghausen Consulting Engineers, Inc.
18215 72nd Avenue South
Kent, WA 98032
425.251.6222
barghausen.com

Job Number **22085**

Sheet **C2** of **34**

P:\22000s\22085\engineering\22085-0.dwg 4/30/2024 1:29 PM RCOX

PORTION OF SE QUARTER OF SEC 27, TWN 20 N, RGE. 4 E, W.M.
CITY OF PUYALLUP, PIERCE COUNTY, WASHINGTON

CIVIL TESC AND DEMOLITION PLAN

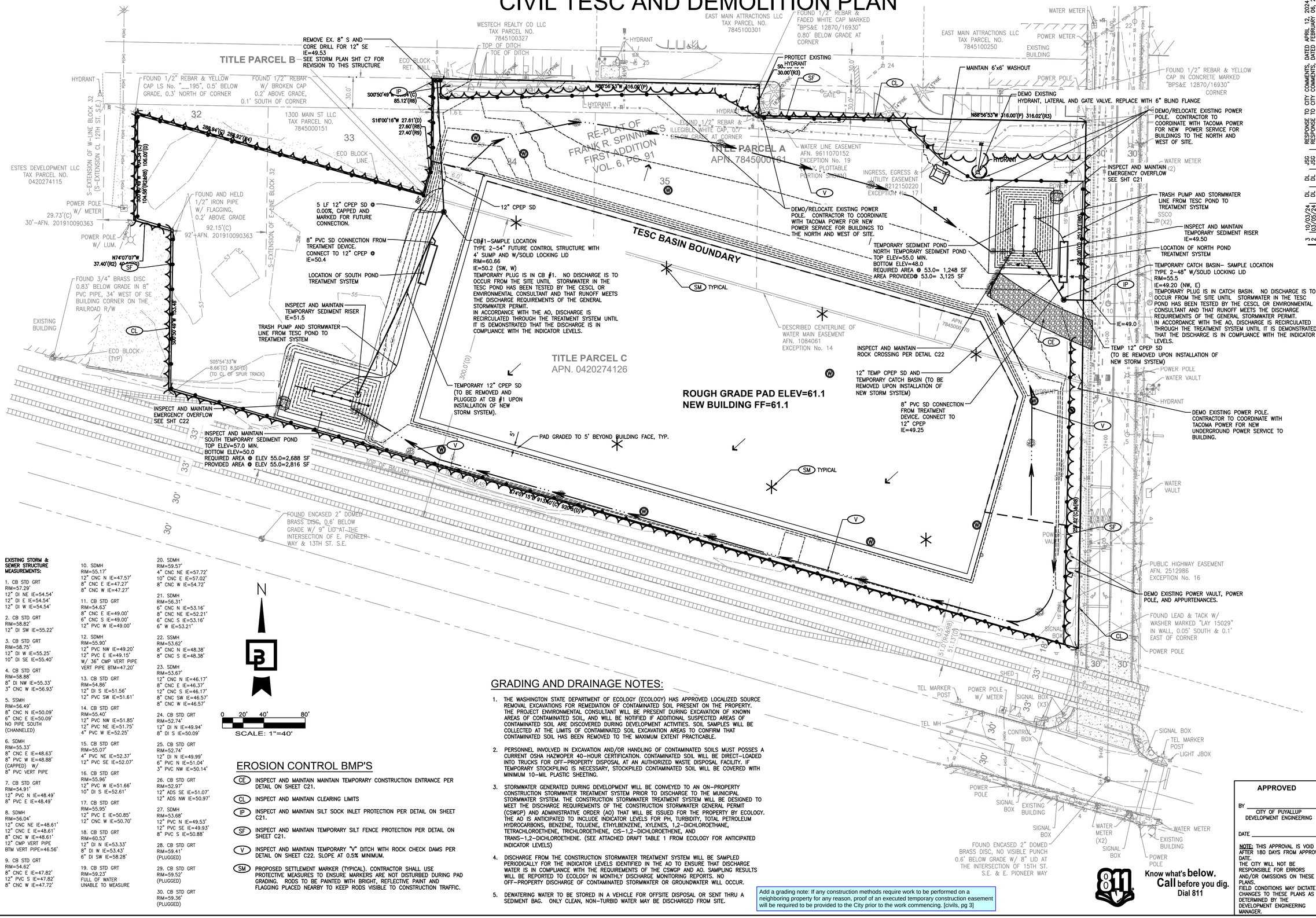

EXISTING STORM & SEWER STRUCTURE MEASUREMENTS:

1. CB STD GRT
RIM=57.29'
12" DI NE IE=54.54'
12" DI E IE=54.54'
12" DI W IE=54.54'

2. CB STD GRT
RIM=58.82'
12" DI SW IE=55.22'

3. CB STD GRT
RIM=58.75'
12" DI W IE=55.25'
10" DI SE IE=55.40'

4. CB STD GRT
RIM=58.88'
8" DI NW IE=55.33'
3" CNC W IE=56.93'

5. SSMH
RIM=56.49'
8" CNC N IE=50.09'
6" CNC E IE=50.09'
NO PIPE SOUTH (CHANNELED)

6. SDMH
RIM=55.33'
8" CNC E IE=48.63'
8" PVC W IE=48.88' (CAPPED) W/ 8" PVC VERT PIPE

7. CB STD GRT
RIM=54.91'
12" PVC N IE=48.49'
8" PVC E IE=48.49'

8. SDMH
RIM=56.04'
12" CNC NE IE=48.61'
12" CNC E IE=48.61'
8" CNC W IE=48.61'
12" CMP VERT PIPE BTM VERT PIPE=46.56'

9. CB STD GRT
RIM=54.62'
8" CNC E IE=47.82'
12" PVC S IE=47.82'
8" CNC W IE=47.72'

10. SDMH
RIM=55.17'
12" CNC N IE=47.57'
8" CNC E IE=47.27'
8" CNC W IE=47.27'

11. CB STD GRT
RIM=54.63'
8" CNC E IE=49.00'
6" CNC S IE=49.00'
12" PVC W IE=49.00'

12. SDMH
RIM=55.90'
12" PVC NW IE=49.20'
12" PVC E IE=49.15'
W/ 36" CMP VERT PIPE
VERT PIPE BTM=47.20'

13. CB STD GRT
RIM=54.86'
12" DI S IE=51.56'
12" PVC SW IE=51.61'

14. CB STD GRT
RIM=55.40'
12" PVC NW IE=51.85'
12" PVC NE IE=51.75'
4" PVC W IE=52.25'

15. CB STD GRT
RIM=55.07'
4" PVC NE IE=52.37'
12" PVC SE IE=52.07'

16. CB STD GRT
RIM=55.96'
12" PVC W IE=51.66'
10" DI S IE=52.61'

17. CB STD GRT
RIM=55.95'
12" PVC E IE=50.85'
12" CNC W IE=50.70'

18. CB STD GRT
RIM=60.53'
12" DI N IE=53.33'
8" DI W IE=53.43'
6" DI SW IE=58.28'

19. CB STD GRT
RIM=59.23'
FULL OF WATER
UNABLE TO MEASURE

20. SDMH
RIM=59.57'
4" CNC NE IE=57.72'
10" CNC E IE=57.02'
8" CNC W IE=54.72'

21. SDMH
RIM=56.31'
6" CNC N IE=53.16'
8" CNC NE IE=52.21'
6" CNC S IE=53.16'
6" W IE=53.21'

22. SSMH
RIM=53.62'
8" CNC N IE=48.38'
8" CNC S IE=48.38'

23. SDMH
RIM=53.67'
12" CNC N IE=46.17'
8" CNC E IE=46.37'
12" CNC S IE=46.17'
8" CNC SW IE=46.57'
8" CNC W IE=46.57'

24. CB STD GRT
RIM=52.74'
12" DI N IE=49.94'
8" DI S IE=50.09'

25. CB STD GRT
RIM=52.74'
12" DI N IE=49.99'
6" PVC N IE=51.04'
3" PVC NW IE=50.14'

26. CB STD GRT
RIM=52.97'
12" ADS SE IE=51.07'
12" ADS NW IE=50.97'

27. SDMH
RIM=53.68'
12" PVC N IE=49.53'
12" PVC SE IE=49.93'
8" PVC S IE=50.88'

28. CB STD GRT
RIM=59.41'
(PLUGGED)

29. CB STD GRT
RIM=59.52'
(PLUGGED)

30. CB STD GRT
RIM=59.36'
(PLUGGED)

EROSION CONTROL BMP'S

- (CE) INSPECT AND MAINTAIN MAINTAIN TEMPORARY CONSTRUCTION ENTRANCE PER DETAIL ON SHEET C21.
- (CL) INSPECT AND MAINTAIN CLEARING LIMITS
- (IP) INSPECT AND MAINTAIN SILT SOCK INLET PROTECTION PER DETAIL ON SHEET C21.
- (SF) INSPECT AND MAINTAIN TEMPORARY SILT FENCE PROTECTION PER DETAIL ON SHEET C21.
- (V) INSPECT AND MAINTAIN TEMPORARY "V" DITCH WITH ROCK CHECK DAMS PER DETAIL ON SHEET C22. SLOPE AT 0.5% MINIMUM.
- (SM) PROPOSED SETTLEMENT MARKER (TYPICAL). CONTRACTOR SHALL USE PROTECTIVE MEASURES TO ENSURE MARKERS ARE NOT DISTURBED DURING PAD GRADING. RODS TO BE PAINTED WITH BRIGHT, REFLECTIVE PAINT AND FLAGGING PLACED NEARBY TO KEEP RODS VISIBLE TO CONSTRUCTION TRAFFIC.

GRADING AND DRAINAGE NOTES:

1. THE WASHINGTON STATE DEPARTMENT OF ECOLOGY (ECOLOGY) HAS APPROVED LOCALIZED SOURCE REMOVAL EXCAVATIONS FOR REMEDIATION OF CONTAMINATED SOIL PRESENT ON THE PROPERTY. THE PROJECT ENVIRONMENTAL CONSULTANT WILL BE PRESENT DURING EXCAVATION OF KNOWN AREAS OF CONTAMINATED SOIL, AND WILL BE NOTIFIED IF ADDITIONAL SUSPECTED AREAS OF CONTAMINATED SOIL ARE DISCOVERED DURING DEVELOPMENT ACTIVITIES. SOIL SAMPLES WILL BE COLLECTED AT THE LIMITS OF CONTAMINATED SOIL EXCAVATION AREAS TO CONFIRM THAT CONTAMINATED SOIL HAS BEEN REMOVED TO THE MAXIMUM EXTENT PRACTICABLE.
2. PERSONNEL INVOLVED IN EXCAVATION AND/OR HANDLING OF CONTAMINATED SOILS MUST POSSES A CURRENT OSHA HAZWOPER 40–HOUR CERTIFICATION. CONTAMINATED SOIL WILL BE DIRECT–LOADED INTO TRUCKS FOR OFF–PROPERTY DISPOSAL AT AN AUTHORIZED WASTE DISPOSAL FACILITY. IF TEMPORARY STOCKPILING IS NECESSARY, STOCKPILED CONTAMINATED SOIL WILL BE COVERED WITH MINIMUM 10–MIL PLASTIC SHEETING.
3. STORMWATER GENERATED DURING DEVELOPMENT WILL BE CONVEYED TO AN ON–PROPERTY CONSTRUCTION STORMWATER TREATMENT SYSTEM PRIOR TO DISCHARGE TO THE MUNICIPAL STORMWATER SYSTEM. THE CONSTRUCTION STORMWATER TREATMENT SYSTEM WILL BE DESIGNED TO MEET THE DISCHARGE REQUIREMENTS OF THE CONSTRUCTION STORMWATER GENERAL PERMIT (CSWGP) AND ADMINISTRATIVE ORDER (AO) THAT WILL BE ISSUED FOR THE PROPERTY BY ECOLOGY. THE AO IS ANTICIPATED TO INCLUDE INDICATOR LEVELS FOR PH, TURBIDITY, TOTAL PETROLEUM HYDROCARBONS, BENZENE, TOLUENE, ETHYLBENZENE, XYLENES, 1,2–DICHLOROETHANE, TETRACHLOROETHENE, TRICHLOROETHENE, CIS–1,2–DICHLOROETHENE, AND TRANS–1,2–DICHLOROETHENE. (SEE ATTACHED DRAFT TABLE 1 FROM ECOLOGY FOR ANTICIPATED INDICATOR LEVELS)
4. DISCHARGE FROM THE CONSTRUCTION STORMWATER TREATMENT SYSTEM WILL BE SAMPLED PERIODICALLY FOR THE INDICATOR LEVELS IDENTIFIED IN THE AO TO ENSURE THAT DISCHARGE WATER IS IN COMPLIANCE WITH THE REQUIREMENTS OF THE CSWGP AND AO. SAMPLING RESULTS WILL BE REPORTED TO ECOLOGY IN MONTHLY DISCHARGE MONITORING REPORTS. NO OFF–PROPERTY DISCHARGE OF CONTAMINATED STORMWATER OR GROUNDWATER WILL OCCUR.
5. DEWATERING WATER TO BE STORED IN A VEHICLE FOR OFFSITE DISPOSAL OR SENT THRU A SEDIMENT BAG. ONLY CLEAN, NON–TURBID WATER MAY BE DISCHARGED FROM SITE.

Add a grading note: If any construction methods require work to be performed on a neighboring property for any reason, proof of an executed temporary construction easement will be required to be provided to the City prior to the work commencing. [civils, pg 3]

APPROVED
BY _____ CITY OF PUYALLUP DEVELOPMENT ENGINEERING
DATE _____
NOTE: THIS APPROVAL IS VOID AFTER 180 DAYS FROM APPROVAL DATE.
THE CITY WILL NOT BE RESPONSIBLE FOR ERRORS AND/OR OMISSIONS ON THESE PLANS.
FIELD CONDITIONS MAY DICTATE CHANGES TO THESE PLANS AS DETERMINED BY THE DEVELOPMENT ENGINEERING MANAGER.

811 Know what's **below.** **Call** before you dig. Dial 811

No.	Date	By	Ckd.	Appr.	Revision
3	10/03/24	DL	JSG	JSG	RESPONSE TO CITY COMMENTS, DATED APRIL 12, 2024
2	05/06/24	DL	JSG		RESPONSE TO CITY COMMENTS, DATED FEBRUARY 06, 2024

Title: **CIVIL TESC AND DEMOLITION PLAN**

FORTRESS - PUYALLUP

For: **CREF3 PUYALLUP OWNER LLC**
11611 SAN VICENTE BLVD
10TH FLOOR
LOS ANGELES, CA 90049

JASON GUY HIBBERT — STATE OF WASHINGTON — 38950 — REGISTERED PROFESSIONAL ENGINEER
10/03/2024

Scale: Horizontal 1"=40' Vertical N/A

Designed DL Drawn RDC Checked DL Approved JGH Date 6/23/23

Barghausen Consulting Engineers, Inc.
18215 72nd Avenue South
Kent, WA 98032
425.251.6222 **barghausen.com**

Job Number **22085**

Sheet **C3** of **34**

P:\22000s\22085\engineering\22085–E–CIVIL.dwg 7/9/2024 3:27 PM RCOX

PORTION OF SE QUARTER OF SEC 27, TWN 20 N, RGE. 4 E, W.M.
CITY OF PUYALLUP, PIERCE COUNTY, WASHINGTON

SITE PLAN

N

0 15' 30' 60'
SCALE: 1"=30'

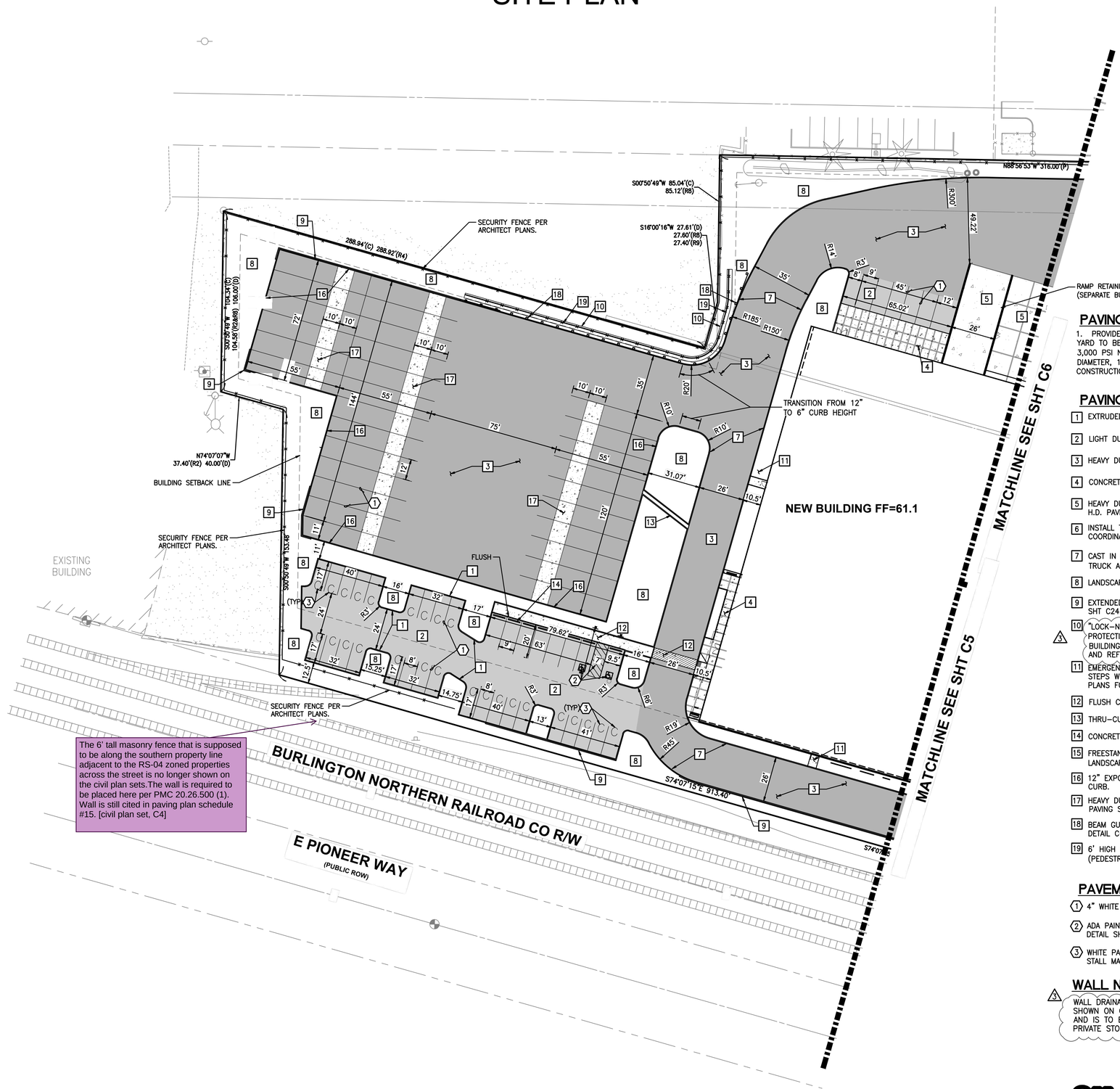

The 6' tall masonry fence that is supposed to be along the southern property line adjacent to the RS-04 zoned properties across the street is no longer shown on the civil plan sets.The wall is required to be placed here per PMC 20.26.500 (1). Wall is still cited in paving plan schedule #15. [civil plan set, C4]

PAVING NOTES:

1. PROVIDE BID ALTERNATE FOR THE ENTIRE TRUCK YARD TO BE CONCRETE – CONSISTING OF 7" THICK, 3,000 PSI NON–REINFORCED CONCRETE WITH 3/4" DIAMETER, 18" LONG SMOOTH DOWELS AT 12" O.C. AT CONSTRUCTION JOINTS FOR THE ENTIRE TRUCK YARD.

PAVING PLAN SCHEDULE:

1. EXTRUDED CONCRETE CURB PER DETAIL SHT C24
2. LIGHT DUTY HMA PAVING PER SECTION SHT C24
3. HEAVY DUTY HMA PAVING PER SECTION SHT C24
4. CONCRETE SIDEWALK PER DETAIL SHT C24
5. HEAVY DUTY CONCRETE STRUCTURAL PAVEMENT PER H.D. PAVING SECTION, SHT C24. SEE PAVING NOTE 1.
6. INSTALL TRANSFORMER PAD PER TACOMA POWER REQUIREMENTS. COORDINATE SIZE WITH TACOMA POWER DESIGN.
7. CAST IN PLACE VERTICAL CONCRETE CURB IN TRUCK AREAS PER DETAIL SHT C24
8. LANDSCAPE. SEE LANDSCAPE PLANS
9. EXTENDED HEIGHT CURB 2.4' MAX HEIGHT PER DETAIL SHT C24. SEE GRADING PLAN FOR EXTENTS.
10. "LOCK–N–LOAD" RETAINING WALL WITH VEHICLE AND PEDESTRIAN FALL PROTECTION. (PER SEPARATE DESIGN BY TERRA ASSOCIATES, INC. AND BUILDING PERMIT PRRWF20240390). SEE GRADING PLAN SHEET C7 AND REFERENCE DETAIL SHEET C31. (3)
11. EMERGENCY ACCESS CONCRETE LANDING (5'x5') WITH STEPS WHERE NECESSARY, TYPICAL. SEE GRADING PLANS FOR STEP LOCATION
12. FLUSH CONCRETE WALK PER DETAIL SHT C24
13. THRU–CURB CONCRETE DRAIN PER DETAIL SHT C24
14. CONCRETE WHEELSTOP PER DETAIL SHT C24
15. FREESTANDING LANDSCAPE/ARCHITECTUAL DECORATIVE WALL. SEE LANDSCAPE DETAIL 5/L–5 (SEPARATE PLANS AND BUILDING PERMIT).
16. 12" EXPOSED HEIGHT CAST–IN–PLACE CONCRETE TRUCK CURB.
17. HEAVY DUTY CONCRETE DOLLY PAD PAVEMENT PER H.D. PAVING SECTION SHT C24
18. BEAM GUARDRAIL, TYPE 31 WITH 6' WOOD POST PER WSDOT DETAIL C–20.10–09 AND STANDARD PLAN C1B, C32
19. 6' HIGH BLACK VINYL COATED CHAINLINK FENCE (PEDESTRIAN FALL PROTECTION)

PAVEMENT MARKING SCHEDULE:

1. 4" WHITE PAINTED PARKING STRIPE, TYPICAL.
2. ADA PAINTED PARKING AND ACCESS STALL PER DETAIL SHT C24
3. WHITE PAINTED "COMPACT" VEHICLE PARKING STALL MARKINGS, TYPICAL.

WALL NOTE:

(3) WALL DRAINAGE CONNECTIONS ARE SHOWN ON CIVIL PERMIT PRCCP20231096 AND IS TO BE CONNECTED TO THE PRIVATE STORM SYSTEM.

APPROVED

BY _____
CITY OF PUYALLUP
DEVELOPMENT ENGINEERING

DATE _____

NOTE: THIS APPROVAL IS VOID AFTER 180 DAYS FROM APPROVAL DATE.
THE CITY WILL NOT BE RESPONSIBLE FOR ERRORS AND/OR OMISSIONS ON THESE PLANS.
FIELD CONDITIONS MAY DICTATE CHANGES TO THESE PLANS AS DETERMINED BY THE DEVELOPMENT ENGINEERING MANAGER.

811 Know what's **below.** **Call** before you dig. Dial 811

No.	Date	By	Ckd.	Appr.	Revision
3	10/03/24	DL	DL	JSG	RESPONSE TO CITY COMMENTS, DATED APRIL 12, 2024
2	03/05/24	DL	DL	JSG	RESPONSE TO CITY COMMENTS, DATED FEBRUARY 06, 2024

Title: **SITE PLAN**

FORTRESS - PUYALLUP

For:
CREF3 PUYALLUP OWNER LLC
11611 SAN VICENTE BLVD
10TH FLOOR
LOS ANGELES, CA 90049

JASON GUY HUBBELL — STATE OF WASHINGTON — 38950 — REGISTERED PROFESSIONAL ENGINEER
10/03/2024

Scale: Horizontal 1"=30' Vertical N/A

Designed DL Drawn RDC Checked DL Approved JGH Date 6/23/23

Barghausen Consulting Engineers, Inc.
18215 72nd Avenue South
Kent, WA 98032
425.251.6222
barghausen.com

Job Number **22085**

Sheet **C4** of **34**

P:\22000s\22085\engineering\22085-A.dwg 7/9/2024 3:28 PM RCOX

PORTION OF SE QUARTER OF SEC 27, TWN 20 N, RGE. 4 E, W.M.
CITY OF PUYALLUP, PIERCE COUNTY, WASHINGTON

SITE PLAN

N

0 15' 30' 60'
SCALE: 1"=30'

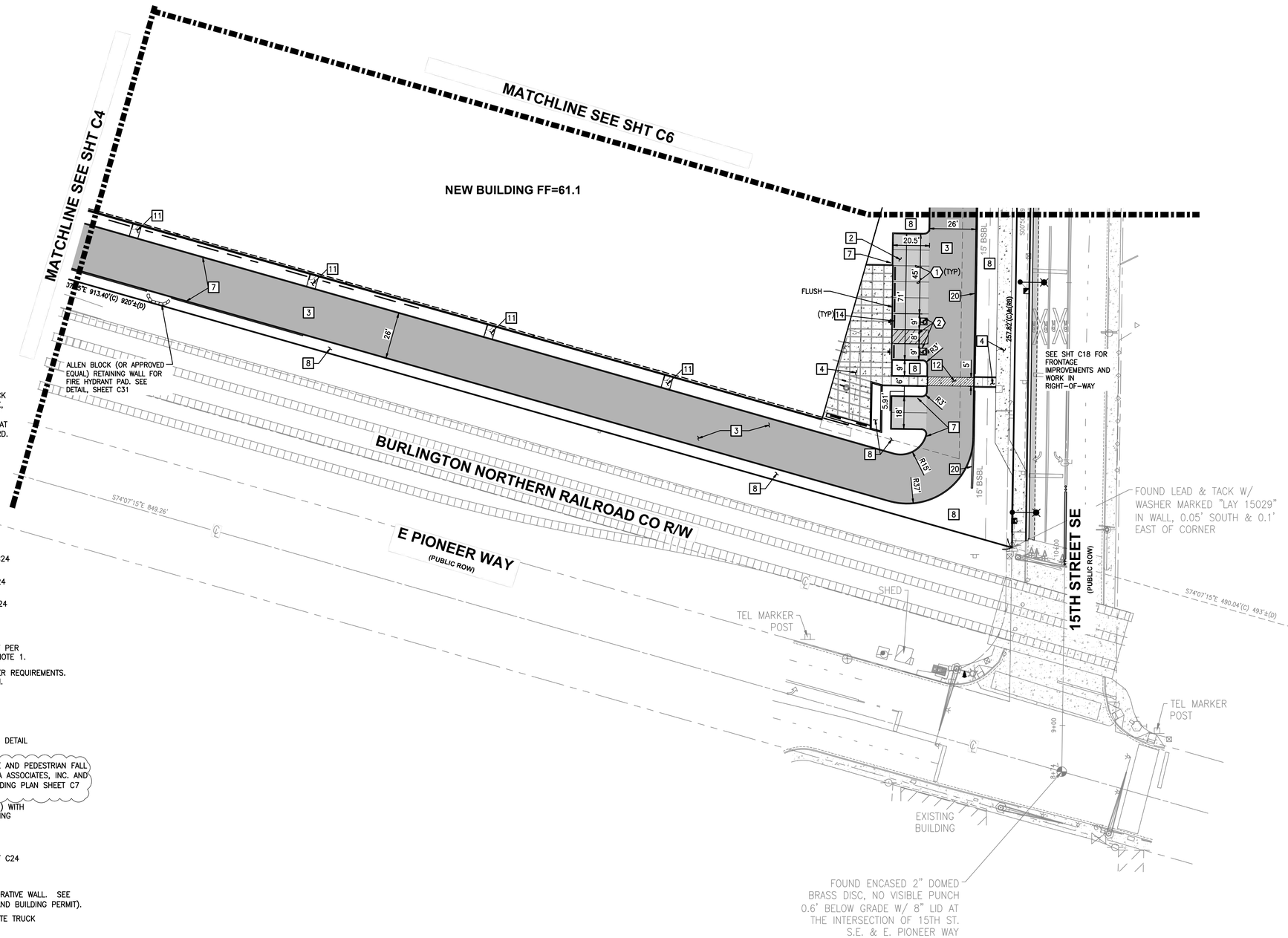

PAVING NOTES:

1. PROVIDE BID ALTERNATE FOR THE ENTIRE TRUCK YARD TO BE CONCRETE – CONSISTING OF 7" THICK, 3,000 PSI NON-REINFORCED CONCRETE WITH 3/4" DIAMETER, 18" LONG SMOOTH DOWELS AT 12" O.C. AT CONSTRUCTION JOINTS FOR THE ENTIRE TRUCK YARD.

PAVING PLAN SCHEDULE:

1. EXTRUDED CONCRETE CURB PER DETAIL SHT C24
2. LIGHT DUTY HMA PAVING PER SECTION SHT C24
3. HEAVY DUTY HMA PAVING PER SECTION SHT C24
4. CONCRETE SIDEWALK PER DETAIL SHT C24
5. HEAVY DUTY CONCRETE STRUCTURAL PAVEMENT PER H.D. PAVING SECTION, SHT C24. SEE PAVING NOTE 1.
6. INSTALL TRANSFORMER PAD PER TACOMA POWER REQUIREMENTS. COORDINATE SIZE WITH TACOMA POWER DESIGN.
7. CAST IN PLACE VERTICAL CONCRETE CURB IN TRUCK AREAS PER DETAIL SHT C24
8. LANDSCAPE. SEE LANDSCAPE PLANS
9. EXTENDED HEIGHT CURB 2.4' MAX HEIGHT PER DETAIL SHT C24. SEE GRADING PLAN FOR EXTENTS.
10. "LOCK-N-LOAD" RETAINING WALL WITH VEHICLE AND PEDESTRIAN FALL PROTECTION. (PER SEPARATE DESIGN BY TERRA ASSOCIATES, INC. AND BUILDING PERMIT PRRWF20240390). SEE GRADING PLAN SHEET C7 AND REFERENCE DETAIL SHEET C31.
11. EMERGENCY ACCESS CONCRETE LANDING (5'x5') WITH STEPS WHERE NECESSARY, TYPICAL. SEE GRADING PLANS FOR STEP LOCATION
12. FLUSH CONCRETE WALK PER DETAIL SHT C24
13. THRU-CURB CONCRETE DRAIN PER DETAIL SHT C24
14. CONCRETE WHEELSTOP PER DETAIL SHT C24
15. FREESTANDING LANDSCAPE/ARCHITECTUAL DECORATIVE WALL. SEE LANDSCAPE DETAIL 5/L-5 (SEPARATE PLANS AND BUILDING PERMIT).
16. 12" EXPOSED HEIGHT CAST-IN-PLACE CONCRETE TRUCK CURB.
17. HEAVY DUTY CONCRETE DOLLY PAD PAVEMENT PER H.D. PAVING SECTION SHT C24
18. BEAM GUARDRAIL, TYPE 31 WITH 6' WOOD POST PER WSDOT DETAIL C-20.10-09 AND STANDARD PLAN C1B, C32
19. 6' HIGH BLACK VINYL COATED CHAINLINK FENCE (PEDESTRIAN FALL PROTECTION)
20. LANDSCAPE BERM RETAINING WALL ("LOCK AND LOAD" W/3.5' MAX. HEIGHT). REFERENCE DETAIL SHEET C31.

PAVEMENT MARKING SCHEDULE:

1. 4" WHITE PAINTED PARKING STRIPE, TYPICAL.
2. ADA PAINTED PARKING AND ACCESS STALL PER DETAIL SHT C24
3. WHITE PAINTED "COMPACT" VEHICLE PARKING STALL MARKINGS, TYPICAL.

WALL NOTE:

3 WALL DRAINAGE CONNECTIONS ARE SHOWN ON CIVIL PERMIT PRCCP20231096 AND IS TO BE CONNECTED TO THE PRIVATE STORM SYSTEM.

APPROVED

BY _____
CITY OF PUYALLUP
DEVELOPMENT ENGINEERING

DATE _____

NOTE: THIS APPROVAL IS VOID AFTER 180 DAYS FROM APPROVAL DATE.
THE CITY WILL NOT BE RESPONSIBLE FOR ERRORS AND/OR OMISSIONS ON THESE PLANS.
FIELD CONDITIONS MAY DICTATE CHANGES TO THESE PLANS AS DETERMINED BY THE DEVELOPMENT ENGINEERING MANAGER.

811 Know what's **below.** **Call** before you dig. Dial 811

No.	Date	By	Ckd.	Appr.	Revision
3	10/03/24	DL	DL	JSG	RESPONSE TO CITY COMMENTS, DATED APRIL 12, 2024
2	03/05/24	DL	DL	JSG	RESPONSE TO CITY COMMENTS, DATED FEBRUARY 06, 2024

Title: SITE PLAN

FORTRESS - PUYALLUP

For: CREF3 PUYALLUP OWNER LLC
11611 SAN VICENTE BLVD
10TH FLOOR
LOS ANGELES, CA 90049

JASON GUY HUBBELL — STATE OF WASHINGTON — 38950 — REGISTERED PROFESSIONAL ENGINEER
10/03/2024

Scale: Horizontal 1"=30' Vertical N/A

Designed DL Drawn RDC Checked DL Approved JGH Date 6/23/23

Barghausen Consulting Engineers, Inc.
18215 72nd Avenue South
Kent, WA 98032
425.251.6222
barghausen.com

Job Number 22085

Sheet C5 of 34

P:\22000s\22085\engineering\22085-A.dwg 7/9/2024 3:28 PM RCOX

PORTION OF SE QUARTER OF SEC 27, TWN 20 N, RGE. 4 E, W.M.
CITY OF PUYALLUP, PIERCE COUNTY, WASHINGTON

SITE PLAN

N

0 15' 30' 60'
SCALE: 1"=30'

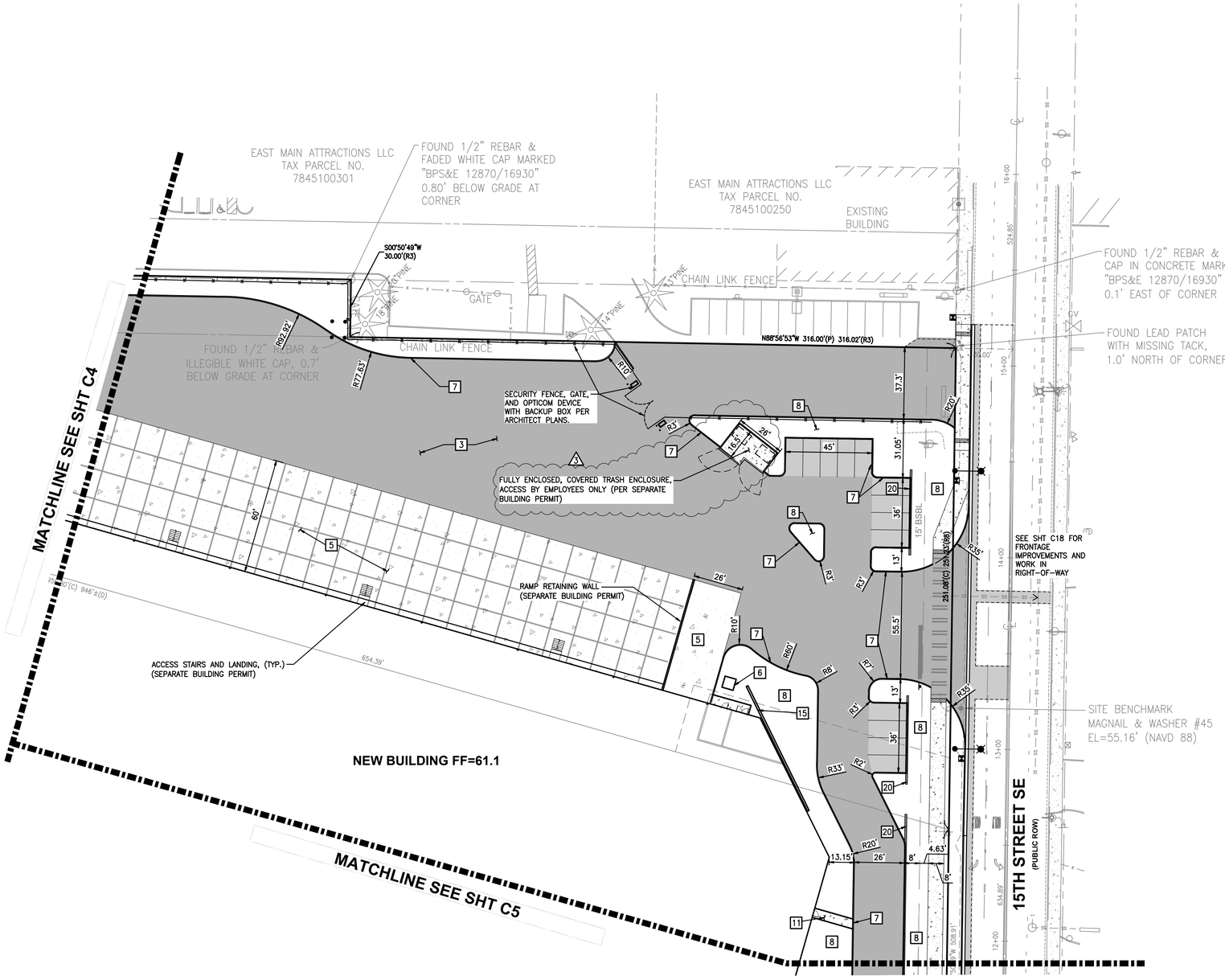

PAVING NOTES:

1. PROVIDE BID ALTERNATE FOR THE ENTIRE TRUCK YARD TO BE CONCRETE – CONSISTING OF 7" THICK, 3,000 PSI NON-REINFORCED CONCRETE WITH 3/4" DIAMETER, 18" LONG SMOOTH DOWELS AT 12" O.C. AT CONSTRUCTION JOINTS FOR THE ENTIRE TRUCK YARD.

PAVING PLAN SCHEDULE:

1. EXTRUDED CONCRETE CURB PER DETAIL SHT C24
2. LIGHT DUTY HMA PAVING PER SECTION SHT C24
3. HEAVY DUTY HMA PAVING PER SECTION SHT C24
4. CONCRETE SIDEWALK PER DETAIL SHT C24
5. HEAVY DUTY CONCRETE STRUCTURAL PAVEMENT PER H.D. PAVING SECTION, SHT C24. SEE PAVING NOTE 1.
6. INSTALL TRANSFORMER PAD PER TACOMA POWER REQUIREMENTS. COORDINATE SIZE WITH TACOMA POWER DESIGN.
7. CAST IN PLACE VERTICAL CONCRETE CURB IN TRUCK AREAS PER DETAIL SHT C24
8. LANDSCAPE. SEE LANDSCAPE PLANS
9. EXTENDED HEIGHT CURB 2.4' MAX HEIGHT PER DETAIL SHT C24. SEE GRADING PLAN FOR EXTENTS.
10. "LOCK-N-LOAD" RETAINING WALL WITH VEHICLE AND PEDESTRIAN FALL PROTECTION. (PER SEPARATE DESIGN BY TERRA ASSOCIATES, INC. AND BUILDING PERMIT PRRWF20240390). SEE GRADING PLAN SHEET C7 AND REFERENCE DETAIL SHEET C31.
11. EMERGENCY ACCESS CONCRETE LANDING (5'x5') WITH STEPS WHERE NECESSARY, TYPICAL. SEE GRADING PLANS FOR STEP LOCATION
12. FLUSH CONCRETE WALK PER DETAIL SHT C24
13. THRU-CURB CONCRETE DRAIN PER DETAIL SHT C24
14. CONCRETE WHEELSTOP PER DETAIL SHT C24
15. FREESTANDING LANDSCAPE/ARCHITECTUAL DECORATIVE WALL. SEE LANDSCAPE DETAIL 5/L-5 (SEPARATE PLANS AND BUILDING PERMIT).
16. 12" EXPOSED HEIGHT CAST-IN-PLACE CONCRETE TRUCK CURB.
17. HEAVY DUTY CONCRETE DOLLY PAD PAVEMENT PER H.D. PAVING SECTION SHT C24
18. BEAM GUARDRAIL, TYPE 31 WITH 6' WOOD POST PER WSDOT DETAIL C-20.10-09 AND STANDARD PLAN C1B, C32
19. 6' HIGH BLACK VINYL COATED CHAINLINK FENCE (PEDESTRIAN FALL PROTECTION)
20. LANDSCAPE BERM RETAINING WALL ("LOCK AND LOAD" W/3.5' MAX. HEIGHT). REFERENCE DETAIL SHEET C31.

PAVEMENT MARKING SCHEDULE:

1. 4" WHITE PAINTED PARKING STRIPE, TYPICAL.
2. ADA PAINTED PARKING AND ACCESS STALL PER DETAIL SHT C24
3. WHITE PAINTED "COMPACT" VEHICLE PARKING STALL MARKINGS, TYPICAL.

WALL NOTE:

3 WALL DRAINAGE CONNECTIONS ARE SHOWN ON CIVIL PERMIT PRCCP20231096 AND IS TO BE CONNECTED TO THE PRIVATE STORM SYSTEM.

APPROVED

BY _____
CITY OF PUYALLUP
DEVELOPMENT ENGINEERING

DATE _____

NOTE: THIS APPROVAL IS VOID AFTER 180 DAYS FROM APPROVAL DATE.
THE CITY WILL NOT BE RESPONSIBLE FOR ERRORS AND/OR OMISSIONS ON THESE PLANS.
FIELD CONDITIONS MAY DICTATE CHANGES TO THESE PLANS AS DETERMINED BY THE DEVELOPMENT ENGINEERING MANAGER.

811 Know what's **below.** **Call** before you dig. Dial 811

No.	Date	By	Ckd.	Appr.	Revision
3	10/03/24	DL	DL	JSG	RESPONSE TO CITY COMMENTS, DATED APRIL 12, 2024
2	03/05/24	DL	DL	JSG	RESPONSE TO CITY COMMENTS, DATED FEBRUARY 06, 2024

Title: **SITE PLAN**

FORTRESS - PUYALLUP

For: **CREF3 PUYALLUP OWNER LLC**
11611 SAN VICENTE BLVD
10TH FLOOR
LOS ANGELES, CA 90049

JASON GUY HUBBELL — STATE OF WASHINGTON — 38950 — REGISTERED PROFESSIONAL ENGINEER
10/03/2024

Scale: Horizontal 1"=30' Vertical N/A

Designed DL Drawn RDC Checked DL Approved JGH Date 6/23/23

Barghausen Consulting Engineers, Inc.
18215 72nd Avenue South
Kent, WA 98032
425.251.6222 barghausen.com

Job Number **22085**

Sheet **C6** of **34**

P:\22000s\22085\engineering\22085-A.dwg 7/9/2024 3:28 PM RCOX

PORTION OF SE QUARTER OF SEC 27, TWN 20 N, RGE. 4 E, W.M.
CITY OF PUYALLUP, PIERCE COUNTY, WASHINGTON

GRADING AND DRAINAGE PLAN

N

0 15' 30' 60'
SCALE: 1"=30'

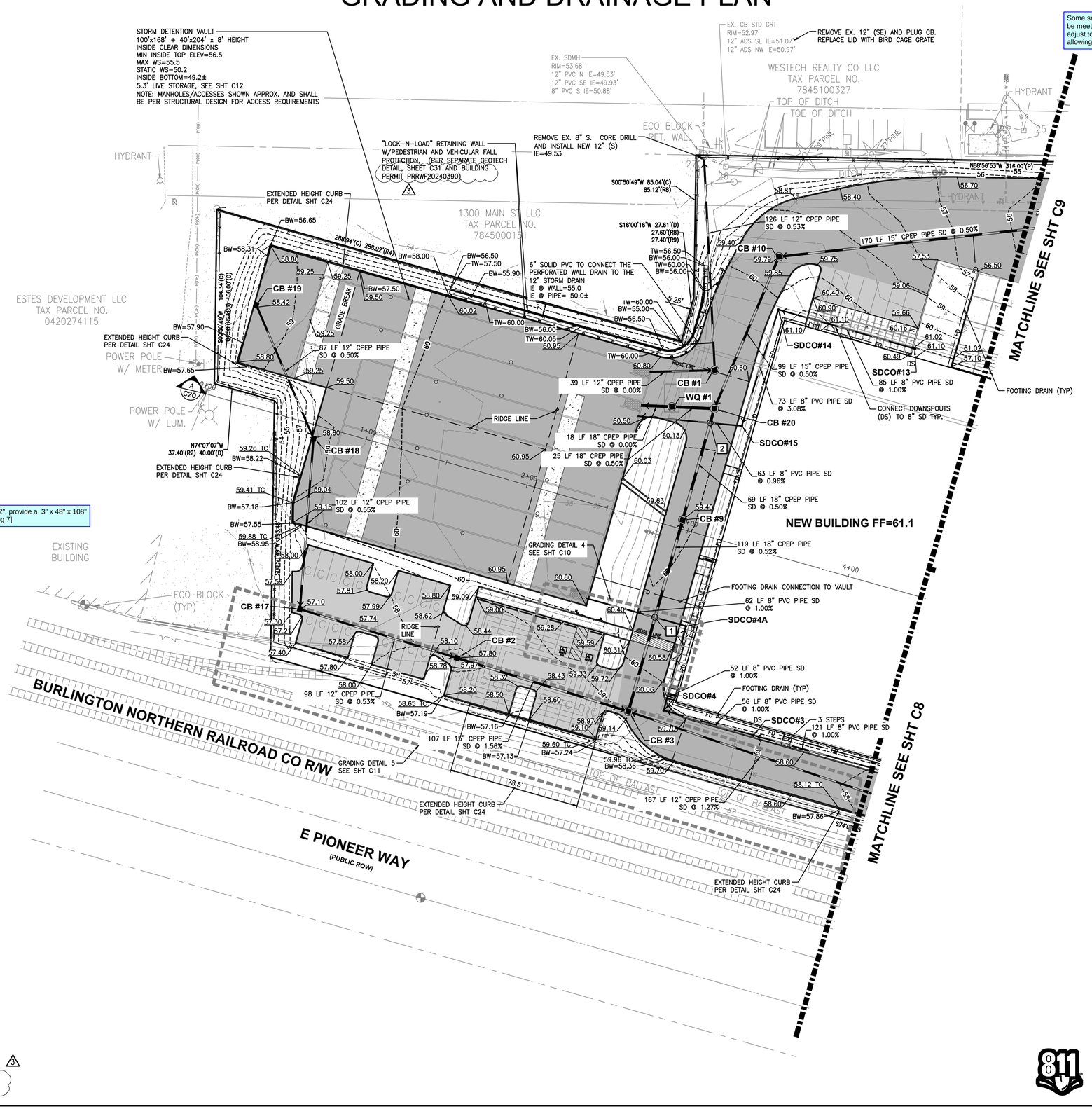

STORM CROSSING TABLE:

1 UTILITY CROSSING
IE 8" SD=53.54
T/P 18" SD=53.1
SEPARATION=0.44'

2 UTILITY CROSSING
IE 8" SD=55.10
T/P 18" SD=52.40
SEPARATION=3.20'

CATCH BASINS
CB #1, TYPE 2-54" CONTROL STRUCTURE W/SOLID LOCKING LID RIM=60.66 IE=50.20 (12" W) IE=50.20 (12" N)
CB #2, TYPE 1, W/STANDARD GRATE RIM=57.80 IE=53.48 (12" W) IE=53.48 (15" E)
CB #3, TYPE 2-48" W/STANDARD GRATE RIM=59.21 IE=51.80 (12" E) IE=51.80 (15" W) IE=51.80 (18" N)
CB #9, TYPE 2-48" W/STANDARD GRATE RIM=59.40 IE=51.18 (18" S) IE=51.18 (18" N)
CB #10, TYPE 2-48" W/STANDARD GRATE RIM=59.79 IE=51.32 (15" E) IE=51.32 (15" SW)
CB #17, TYPE 1, W/STANDARD GRATE RIM=57.10 IE=54.00 (12" N) IE=54.00 (12" E)
CB #18, TYPE 1, W/STANDARD GRATE RIM=58.63 IE=54.56 (12" NW) IE=54.56 (12" S)
CB #19, TYPE 1, W/STANDARD GRATE RIM=58.43 IE=55.00 (12" SE)
CB #20, TYPE 2-48" W/SOLID LOCKING LID RIM=60.35 IE=50.83 (15" NE) IE=50.83 (18" S) IE=50.83 (18" W)
SDCO#3, RIM=59.49 IE=54.80 (8" E) IE=54.80 (8" W)
SDCO#4, RIM=59.56 IE=54.24 (8" E) IE=54.24 (8" N)
SDCO#4A, RIM=60.77 IE=53.72 (8" S) IE=53.72 (8" W)
SDCO#13, RIM=61.03 IE=58.50 (8" W)
SDCO#14, RIM=60.39 IE=57.65 (8" E) IE=57.65 (8" S)
SDCO#15, RIM=60.75 IE=55.40 (8" N) IE=55.40 (8" W)
WQ #1, BPU-816IB RIM=60.39 IE=50.70 (18" E) IE=50.20 (18" W)

WALL NOTES:

(WALL DESIGN PER SEPARATE PLANS AND BUILDING PERMIT).

1. WALL DESIGN NEEDS TO BE SUBMITTED TO THE OWNER AND THE ENGINEER/CITY FOR REVIEW AND APPROVAL.
2. WALL DESIGNS OVER 4-FEET HIGH REQUIRE A SEPARATE BUILDING PERMIT AND ENGINEERING DESIGN.
3. WALLS OVER 30-INCHES HIGH, WHERE TOP OF WALL IS ADJACENT TO PEDESTRIAN OR VEHICULAR PATHWAY(S), NEED TO INCLUDE PEDESTRIAN AND/OR VEHICULAR FALL PROTECTION. THE FALL PROTECTION SHALL BE DESIGNED, PERMITTED, PROVIDED BY, AND INSTALLED BY CONTRACTOR.
4. THE DIMENSIONS SHOWN ON THE PLAN ARE THE BASIS OF WALL PLACEMENT. DIMENSIONS ARE SHOWN TO THE FACE OF WALL AT THE EXPOSED GRADE. CONTRACTOR SHALL USE A CURRENT CAD FILE FROM BARGHAUSEN CONSULTING ENGINEERS, INC. TO STAKE THE FACE OF WALL LOCATION.
5. THE TYPE OF WALL CHOSEN WILL DETERMINE THE WALL WIDTH, BATTER, AND IF GEOGRID IS NECESSARY.
6. THE WALL HEIGHT SHOWN ON THE PLANS IS AN ESTIMATED MAXIMUM HEIGHT. TOP OF WALL ELEVATIONS PROVIDED ARE TO THE TOP OF EXPOSED FACE OF WALL, NOT INCLUDING ANY PEDESTRIAN OR VEHICULAR BARRIER IF NECESSARY. BOTTOM OF WALL ELEVATIONS PROVIDED ARE TO THE BOTTOM OF THE EXPOSED FACE OF WALL (AND NOT TO WALL FOOTING). THE WALL ELEVATIONS PROVIDED ON THE PLANS ARE PROVIDED AT UNIFORM LOCATIONS AND DO NOT NECESSARILY REPRESENT ALL OF THE WALL ELEVATION CHANGES. WALL PROFILES ARE REQUIRED TO BE PART OF THE DESIGN/BUILD OR STRUCTURAL DESIGN PLANS. WALL PROFILES MAY RESULT IN HIGHER OVERALL WALL HEIGHTS.
7. COORDINATION BETWEEN WALL DESIGN AND THE CONSTRUCTION DRAWINGS NEEDS TO OCCUR PRIOR TO CONSTRUCTION TO CONFIRM WALL LOCATION IN PLAN VIEW, DRAINAGE REQUIREMENTS, ETC.
8. PROVIDE WALL FOOTING DRAIN CONNECTIONS TO STORM MAIN AT ALL PROPOSED WALLS.

No.	Date	By	Ckd.	Appr.	Revision
3	10/03/24	DL	DL	JSG	RESPONSE TO CITY COMMENTS, DATED APRIL 12, 2024
2	03/05/24	DL	DL	JSG	RESPONSE TO CITY COMMENTS, DATED FEBRUARY 06, 2024

Title: GRADING AND DRAINAGE PLAN

FORTRESS - PUYALLUP

For:
CREF3 PUYALLUP OWNER LLC
11611 SAN VICENTE BLVD
10TH FLOOR
LOS ANGELES, CA 90049

JASON GUY HUSSEY — STATE OF WASHINGTON — 38950 — REGISTERED PROFESSIONAL ENGINEER
10/03/2024

Scale:	Horizontal	Vertical
	1"=30'	N/A

Designed	DL	Drawn	RDC	Checked	DL	Approved	JGH	Date	6/23/23

Barghausen Consulting Engineers, Inc.
18215 72nd Avenue South
Kent, WA 98032
425.251.6222
barghausen.com

APPROVED

BY _____
CITY OF PUYALLUP
DEVELOPMENT ENGINEERING

DATE _____

NOTE: THIS APPROVAL IS VOID AFTER 180 DAYS FROM APPROVAL DATE.
THE CITY WILL NOT BE RESPONSIBLE FOR ERRORS AND/OR OMISSIONS ON THESE PLANS.
FIELD CONDITIONS MAY DICTATE CHANGES TO THESE PLANS AS DETERMINED BY THE DEVELOPMENT ENGINEERING MANAGER.

811 Know what's below. Call before you dig. Dial 811

Job Number 22085

Sheet C7 of 34

P:\22000s\22085\engineering\22085-GM.dwg 7/11/2024 12:14 PM DLAMOTTE

PORTION OF SE QUARTER OF SEC 27, TWN 20 N, RGE. 4 E, W.M.
CITY OF PUYALLUP, PIERCE COUNTY, WASHINGTON

GRADING AND DRAINAGE PLAN

N

0 15' 30' 60'
SCALE: 1"=30'

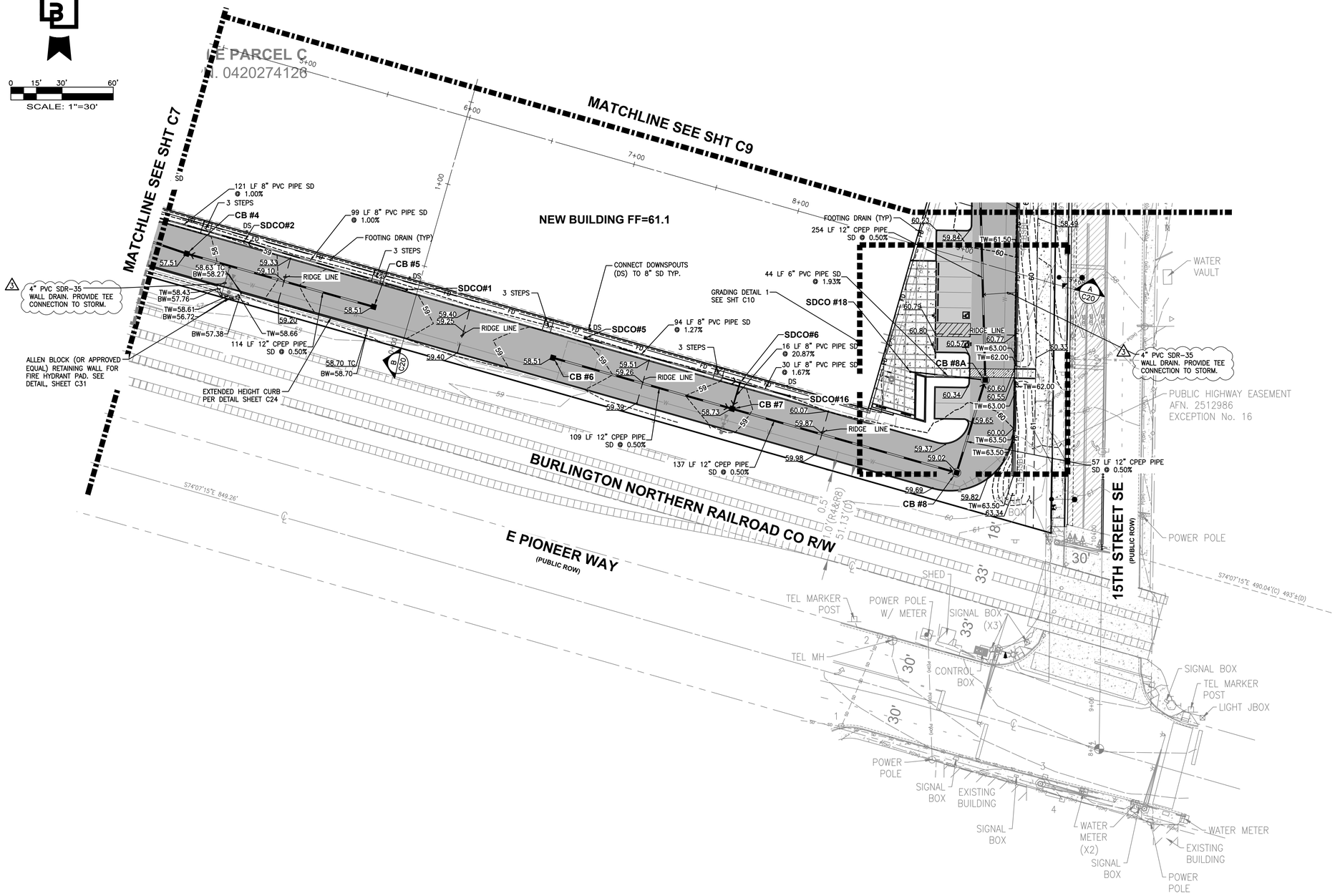

CATCH BASINS
CB #4, TYPE 1, W/STANDARD GRATE RIM=57.50 IE=53.93 (12" E) IE=53.93 (12" W)
CB #5, TYPE 1, W/STANDARD GRATE RIM=58.50 IE=54.50 (12" W)
CB #6, TYPE 1, W/STANDARD GRATE RIM=58.50 IE=54.50 (12" E)
CB #7, TYPE 1, W/STANDARD GRATE RIM=58.73 IE=53.95 (12" W) IE=54.28 (8" N) IE=53.95 (12" E)
CB #8, TYPE 2-48" W/STANDARD GRATE RIM=59.00 IE=53.27 (12" W) IE=53.27 (12" N)
CB #8A, TYPE 2-48" W/SOLID LOCKING LID RIM=60.45 IE=52.99 (12" S) IE=57.00 (6" W) IE=52.99 (12" N)
SDCO #18, PLANTER DRAIN RIM=60.85 IE=57.85 (6" E)
SDCO#1, RIM=59.34 IE=57.00 (8" W)
SDCO#2, RIM=59.40 IE=56.01 (8" E) IE=56.01 (8" W)
SDCO#5, RIM=59.69 IE=58.80 (8" E)
SDCO#6, RIM=59.58 IE=57.60 (8" W) IE=57.60 (8" E) IE=57.60 (8" S)
SDCO#16, RIM=60.10 IE=57.10 (8" W)

APPROVED

BY _____
CITY OF PUYALLUP
DEVELOPMENT ENGINEERING

DATE _____

NOTE: THIS APPROVAL IS VOID AFTER 180 DAYS FROM APPROVAL DATE.
THE CITY WILL NOT BE RESPONSIBLE FOR ERRORS AND/OR OMISSIONS ON THESE PLANS.
FIELD CONDITIONS MAY DICTATE CHANGES TO THESE PLANS AS DETERMINED BY THE DEVELOPMENT ENGINEERING MANAGER.

811 Know what's **below.** **Call** before you dig. Dial 811

No.	Date	By	Ckd.	Appr.	Revision
3	10/03/24	DL	DL	JSG	RESPONSE TO CITY COMMENTS, DATED APRIL 12, 2024
2	03/05/24	DL	DL	JSG	RESPONSE TO CITY COMMENTS, DATED FEBRUARY 06, 2024

Title: **GRADING AND DRAINAGE PLAN**

FORTRESS - PUYALLUP

For: **CREF3 PUYALLUP OWNER LLC**
11611 SAN VICENTE BLVD
10TH FLOOR
LOS ANGELES, CA 90049

JASON GUY HUBBELL — STATE OF WASHINGTON — 38950 — REGISTERED PROFESSIONAL ENGINEER
10/03/2024

Scale: Horizontal 1"=30' Vertical N/A

Designed DL Drawn RDC Checked DL Approved JGH Date 6/23/23

Barghausen Consulting Engineers, Inc.
18215 72nd Avenue South
Kent, WA 98032
425.251.6222 **barghausen.com**

Job Number **22085**

Sheet **C8** of **34**

P:\22000s\22085\engineering\22085-GM.dwg 7/11/2024 12:14 PM DLAMOTTE

PORTION OF SE QUARTER OF SEC 27, TWN 20 N, RGE. 4 E, W.M.
CITY OF PUYALLUP, PIERCE COUNTY, WASHINGTON

GRADING AND DRAINAGE PLAN

N

0 15' 30' 60'
SCALE: 1"=30'

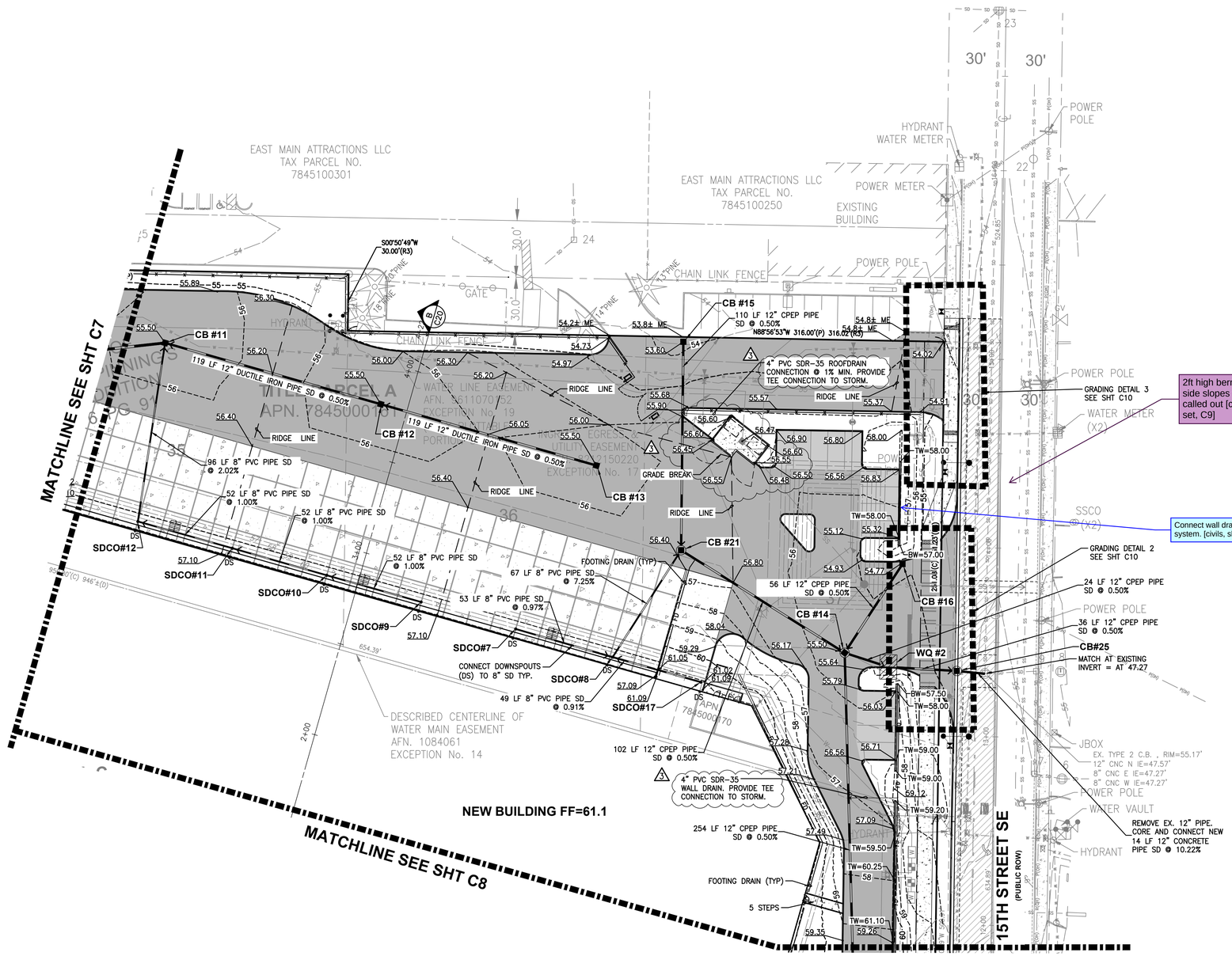

CATCH BASINS
CB #11, TYPE 1, W/STANDARD GRATE RIM=55.50 IE=52.17 (12" E) IE=52.17 (8" S) IE=52.17 (15" W)
CB #12, TYPE 1, W/STANDARD GRATE RIM=55.50 IE=52.76 (12" E) IE=52.76 (12" W)
CB #13, TYPE 1, W/STANDARD GRATE RIM=55.50 IE=53.35 (12" W)
CB #14, TYPE 2-48" W/STANDARD GRATE RIM=55.50 IE=51.73 (12" S) IE=49.54 (12" NW) IE=51.35 (12" NE) IE=49.54 (12" E)
CB #15, TYPE 1, W/STANDARD GRATE RIM=53.60 IE=50.60 (12" S)
CB #16, TYPE 1, W/STANDARD GRATE RIM=54.78 IE=51.63 (12" SW)
CB #21, TYPE 2-48" W/SOLID LOCKING LID RIM=56.42 IE=50.05 (12" N) IE=50.38 (8" SW) IE=50.05 (12" SE)
CB#25, TYPE 2-48" W/STD. GRATE RIM=54.64 IE=48.74 (12" W) IE=48.74 (12" E)
SDCO#7, RIM=57.05 IE=55.78 (8" E)
SDCO#8, RIM=57.05 IE=55.26 (8" W) IE=55.26 (8" E) IE=55.26 (8" NE)
SDCO#9, RIM=57.05 IE=55.66 (8" W)
SDCO#10, RIM=57.05 IE=55.14 (8" E) IE=55.14 (8" W)
SDCO#11, RIM=57.05 IE=54.62 (8" E) IE=54.62 (8" W)
SDCO#12, RIM=57.05 IE=54.10 (8" E) IE=54.10 (8" N)
SDCO#17, RIM=61.04 IE=55.70 (8" W)
WQ #2, 6X12IB RIM=55.43 IE=49.42 (12" W) IE=48.92 (12" E)

No.	Date	By	Ckd.	Appr.	Revision
3	10/03/24	DL	DL	JSG	RESPONSE TO CITY COMMENTS, DATED APRIL 12, 2024
2	05/05/24	DL	DL	JSG	RESPONSE TO CITY COMMENTS, DATED FEBRUARY 06, 2024

Title: **GRADING AND DRAINAGE PLAN**

FORTRESS - PUYALLUP

For:
CREF3 PUYALLUP OWNER LLC
11611 SAN VICENTE BLVD
10TH FLOOR
LOS ANGELES, CA 90049

JASON GUY HUBBARD
STATE OF WASHINGTON
38950
REGISTERED
PROFESSIONAL ENGINEER
10/03/2024

Scale: Horizontal 1"=30' Vertical N/A

Designed DL Drawn RDC Checked DL Approved JGH Date 6/23/23

Barghausen Consulting Engineers, Inc.
18215 72nd Avenue South
Kent, WA 98032
425.251.6222 **barghausen.com**

Job Number **22085**

Sheet **C9** of **34**

APPROVED

BY _____
CITY OF PUYALLUP
DEVELOPMENT ENGINEERING

DATE _____

NOTE: THIS APPROVAL IS VOID AFTER 180 DAYS FROM APPROVAL DATE.
THE CITY WILL NOT BE RESPONSIBLE FOR ERRORS AND/OR OMISSIONS ON THESE PLANS.
FIELD CONDITIONS MAY DICTATE CHANGES TO THESE PLANS AS DETERMINED BY THE DEVELOPMENT ENGINEERING MANAGER.

811 Know what's **below.** **Call** before you dig. Dial 811

P:\22000s\22085\engineering\22085--GM.dwg 7/11/2024 12:14 PM DLAMOTTE

PORTION OF SE QUARTER OF SEC 27, TWN 20 N, RGE. 4 E, W.M.
CITY OF PUYALLUP, PIERCE COUNTY, WASHINGTON

GRADING DETAILS

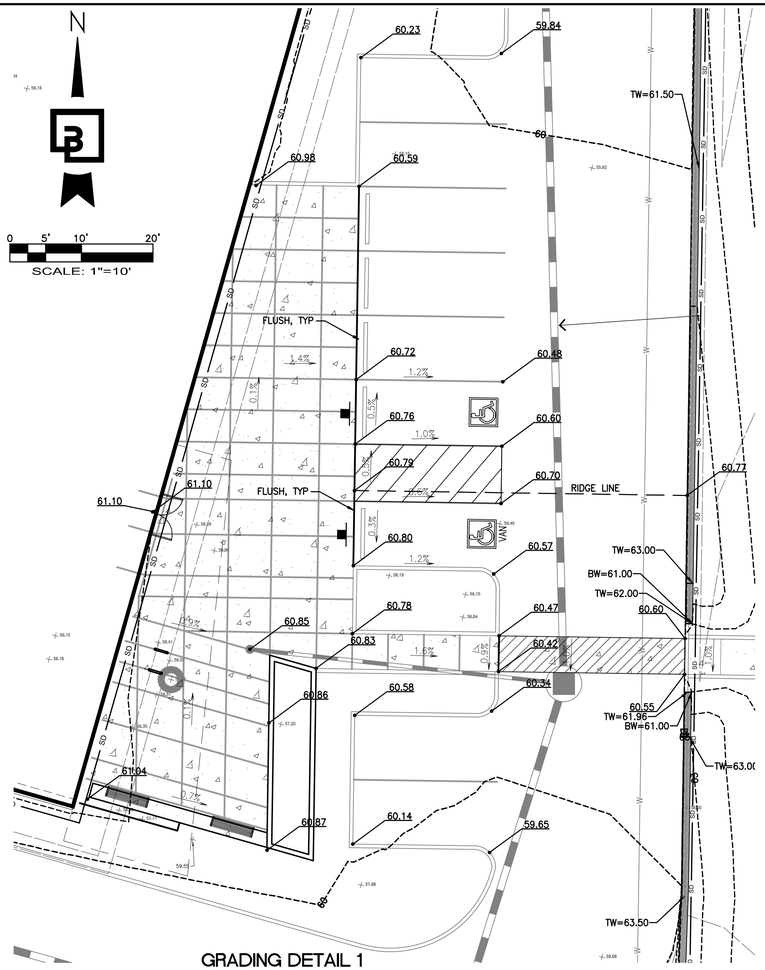

GRADING DETAIL 1

1"=10'

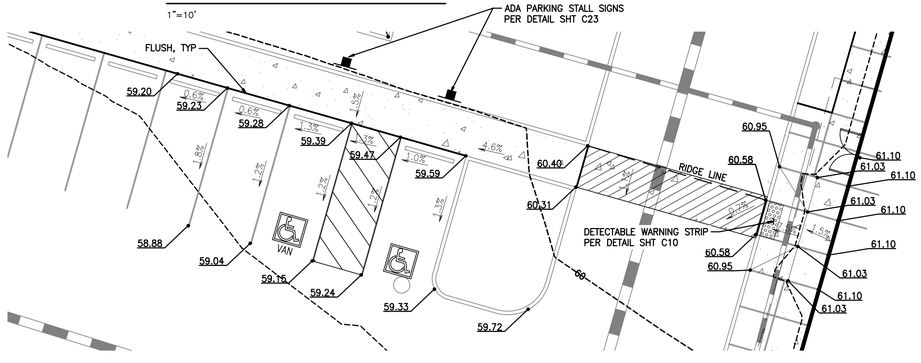

GRADING DETAIL 4

1"=10'

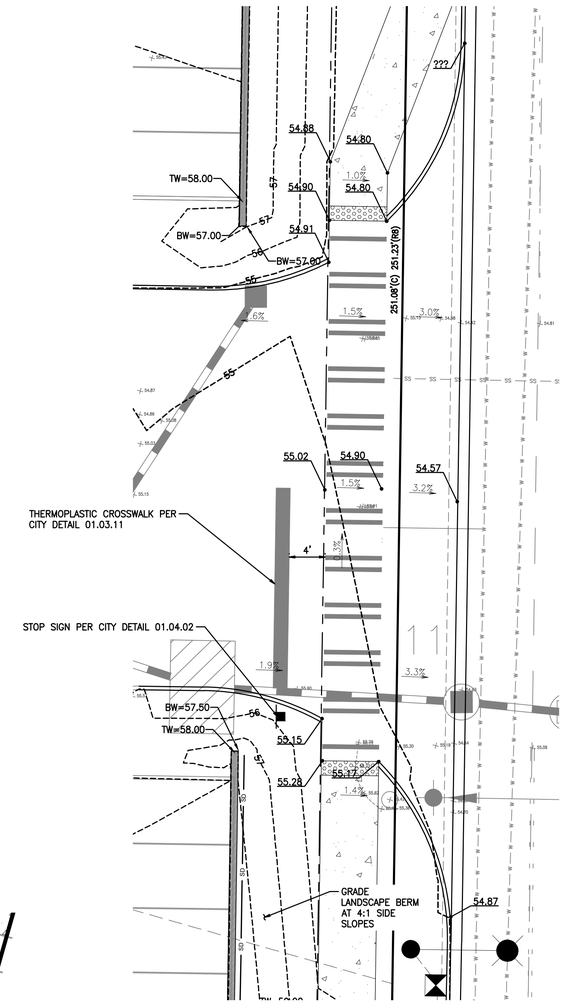

GRADING DETAIL 2

1"=10'

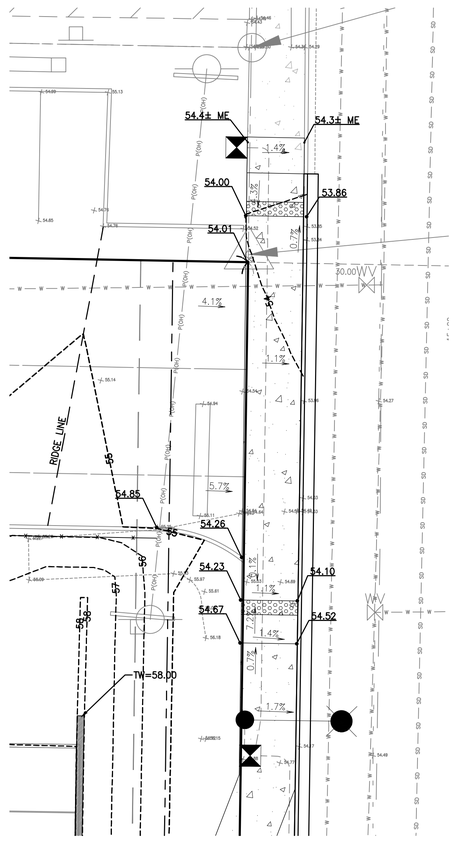

GRADING DETAIL 3

1"=10'

No.	Date	By	Ckd.	Appr.	Revision
3	10/03/24	DL	DL	JSG	RESPONSE TO CITY COMMENTS, DATED APRIL 12, 2024
2	05/06/24	DL	DL	JSG	RESPONSE TO CITY COMMENTS, DATED FEBRUARY 06, 2024

Provide detectable warning surfaces if this approach will be stop controlled. [civils, pg 10]

Title: **GRADING DETAILS**

FORTRESS - PUYALLUP

For:
CREF3 PUYALLUP OWNER LLC
11611 SAN VICENTE BLVD
10TH FLOOR
LOS ANGELES, CA 90049

JASON GUY HUBBELL
STATE OF WASHINGTON
38950
REGISTERED
PROFESSIONAL ENGINEER
10/03/2024

Scale: Horizontal 1"=10' Vertical N/A

Designed DL Drawn RDC Checked DL Approved JGH Date 6/23/23

Barghausen Consulting Engineers, Inc.
18215 72nd Avenue South
Kent, WA 98032
425.251.6222
barghausen.com

Job Number **22085**

Sheet **C10** of **34**

APPROVED

BY _____
CITY OF PUYALLUP
DEVELOPMENT ENGINEERING

DATE _____

NOTE: THIS APPROVAL IS VOID AFTER 180 DAYS FROM APPROVAL DATE.
THE CITY WILL NOT BE RESPONSIBLE FOR ERRORS AND/OR OMISSIONS ON THESE PLANS.
FIELD CONDITIONS MAY DICTATE CHANGES TO THESE PLANS AS DETERMINED BY THE DEVELOPMENT ENGINEERING MANAGER.

811 Know what's **below.** **Call** before you dig. Dial 811

P:\22000s\22085\engineering\22085-GMD.dwg 7/10/2024 8:16 AM RCOX

PORTION OF SE QUARTER OF SEC 27, TWN 20 N, RGE. 4 E, W.M.
CITY OF PUYALLUP, PIERCE COUNTY, WASHINGTON

GRADING DETAILS

N

0 5' 10' 20'
SCALE: 1"=10'

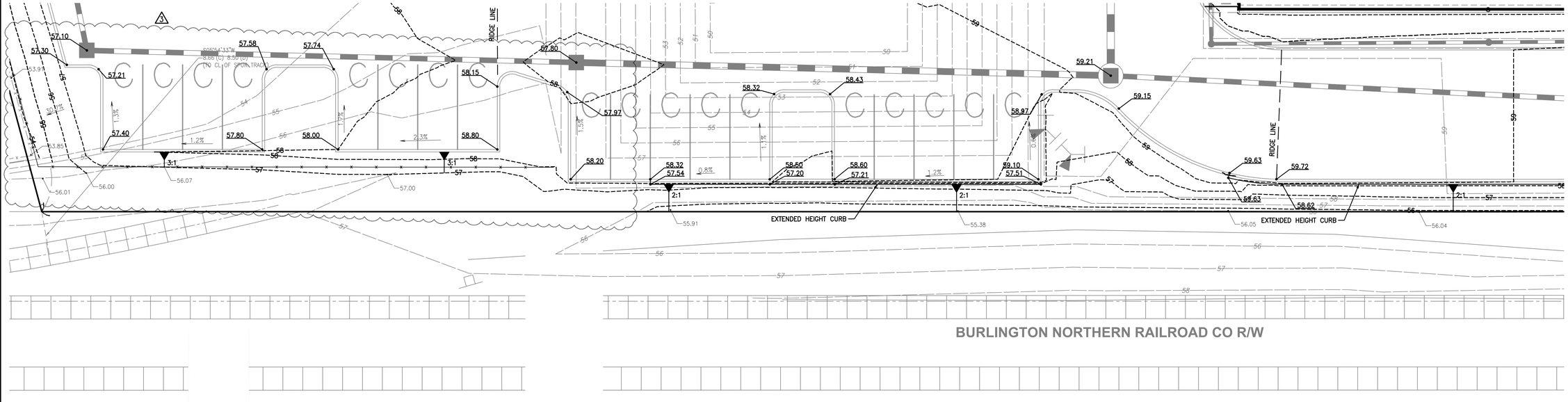

GRADING DETAIL 5
1"=10'

APPROVED

BY _____
CITY OF PUYALLUP
DEVELOPMENT ENGINEERING

DATE _____

NOTE: THIS APPROVAL IS VOID AFTER 180 DAYS FROM APPROVAL DATE.
THE CITY WILL NOT BE RESPONSIBLE FOR ERRORS AND/OR OMISSIONS ON THESE PLANS.
FIELD CONDITIONS MAY DICTATE CHANGES TO THESE PLANS AS DETERMINED BY THE DEVELOPMENT ENGINEERING MANAGER.

811 Know what's **below.** **Call** before you dig. Dial 811

No.	Date	By	Ckd.	Appr.	Revision
3	10/03/24	DL	DL	JSG	RESPONSE TO CITY COMMENTS, DATED APRIL 12, 2024
2	03/05/24	DL	DL	JSG	RESPONSE TO CITY COMMENTS, DATED FEBRUARY 06, 2024

Title: **GRADING DETAILS**

FORTRESS - PUYALLUP

For: **CREF3 PUYALLUP OWNER LLC**
11611 SAN VICENTE BLVD
10TH FLOOR
LOS ANGELES, CA 90049

JASON GUY HUBBELL — STATE OF WASHINGTON — 38950 — REGISTERED PROFESSIONAL ENGINEER
10/03/2024

Scale: Horizontal 1"=10' Vertical N/A

Designed DL Drawn RDC Checked DL Approved JGH Date 6/23/23

Barghausen Consulting Engineers, Inc.
18215 72nd Avenue South
Kent, WA 98032
425.251.6222 **barghausen.com**

Job Number **22085**

Sheet **C11** of **34**

P:\22000s\22085\engineering\22085-GMD.dwg 7/10/2024 8:16 AM RCOX

PORTION OF SE QUARTER OF SEC 27, TWN 20 N, RGE. 4 E, W.M.
CITY OF PUYALLUP, PIERCE COUNTY, WASHINGTON

VAULT DETAILS

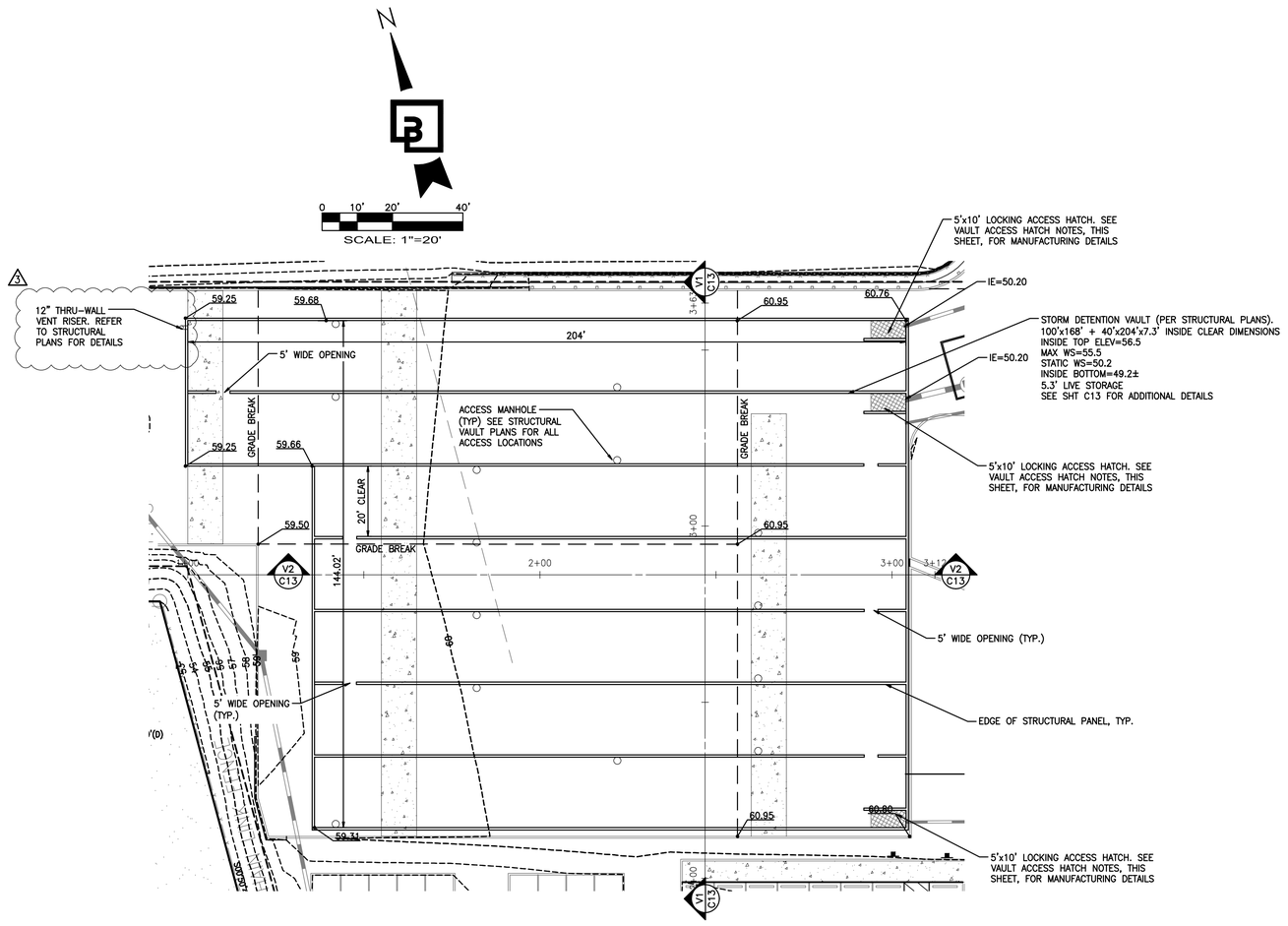

VAULT DETAIL 1

1"=20'

VAULT NOTES:

1. VENTILATION PIPES (MIN. 12" DIAMETER OR EQUIVALENT) SHALL BE PROVIDED IN ALL CORNERS OF THE VAULT TO ALLOW FOR VENTILATION PRIOR TO ENTRY OF MAINTENANCE PERSONNEL INTO VAULT. VENTILATION PIPES ENTER TROUGH THE VAULT LID. PROVIDE LOCKING LIDS FLUSH WITH FINISH GRADE USING CLEANOUT.
2. WHERE PIPES ENTER AND LEAVE THE VAULT BELOW THE DESIGNED MAX WATER SURFACE, THEY SHALL BE SEALED USING A NON-POROUS, NON-SHRINKING GROUT.
3. ACCESS LOCATIONS, VAULT DESIGN AND WALL OPENINGS ARE PER THE STRUCTURAL DRAWING AND THE LOCATIONS ARE SHOWN FOR REFERENCE ONLY.
4. INSTALL CONFINED SPACE PLACARD AT ALL ACCESS POINTS TO THE VAULT.
5. CONTRACTOR SHALL SUBMIT MATERIAL SUBMITTALS FOR REVIEW AND APPROVAL PRIOR TO CONSTRUCTION.

VAULT ACCESS HATCH NOTES:

1. PROVIDE H-20 (MIN) TRAFFIC RATED 5'X10' LOCKING, PERSONAL 2-DOOR SOLID ACCESS HATCH.
2. FRAME AND HATCH COVER SHALL BE DESIGNED FOR 150 PSF LIVE LOAD.
3. A SPRING-ASSISTED LIFT WITH HOLD-OPEN FEATURE TORSION BARS SHALL BE INSTALLED. AUTOMATIC HOLD-OPEN ARM WITH GRIP HANDLE RELEASE SHALL BE ADDED.
4. POLYPROPYLENE RUNGS OR LADDER SHALL BE INSTALLED EXTENDING FROM THE HATCH TO THE BOTTOM OF THE VAULT.
5. A LADDER-UP MECHANISM SHALL BE INSTALLED CENTERED OVER THE RUNGS OR LADDER BELOW THE HATCH.
6. ALL HARDWARE SHALL BE ZINC-COATED.

VAULT ACCESS OPENINGS NOTES:

1. IN ADDITION TO THE HATCHES SHOWN, VAULT ACCESS OPENINGS MUST BE PROVIDED SUCH THAT NO LOCATION WITHIN THE VAULT IS MORE THAN 50 FEET FROM AN ACCESS OPENING. ACCESS TO EACH "V" ON THE VAULT FLOOR MUST BE PROVIDED.
2. ACCESS OPENINGS MUST HAVE ROUND, SOLID LOCKING LIDS, OR 3 FOOT SQUARE, LOCKING DIAMOND PLATE COVERS.

DETENTION VAULT DATA:

MIN INSIDE TOP OF VAULT ELEV=	56.7
MAX W.S. ELEV=	55.5
STATIC W.S. ELEV=	50.2

SEE THIS SHEET AND C13 FOR DETAILS.

DETENTION VAULT:	
LIVE STORAGE VOLUME REQUIRED=	143,488 C.F.
LIVE STORAGE VOLUME PROVIDED=	143,488 C.F.

AS-BUILT DETENTION VOLUME CONSTRUCTED=_____C.F.

APPROVED

BY _____
CITY OF PUYALLUP
DEVELOPMENT ENGINEERING

DATE _____

NOTE: THIS APPROVAL IS VOID AFTER 180 DAYS FROM APPROVAL DATE.
THE CITY WILL NOT BE RESPONSIBLE FOR ERRORS AND/OR OMISSIONS ON THESE PLANS.
FIELD CONDITIONS MAY DICTATE CHANGES TO THESE PLANS AS DETERMINED BY THE DEVELOPMENT ENGINEERING MANAGER.

811 Know what's **below.** **Call** before you dig. Dial 811

No.	Date	By	Ckd.	Appr.	Revision
3	10/03/24	DL	DL	JSG	RESPONSE TO CITY COMMENTS, DATED APRIL 12, 2024
2	03/05/24	DL	DL	JSG	RESPONSE TO CITY COMMENTS, DATED FEBRUARY 06, 2024

Title: **VAULT DETAILS**

FORTRESS - PUYALLUP

For: **CREF3 PUYALLUP OWNER LLC**
11611 SAN VICENTE BLVD
10TH FLOOR
LOS ANGELES, CA 90049

JASON GUY HUBBELL — STATE OF WASHINGTON — 38950 — REGISTERED PROFESSIONAL ENGINEER
10/03/2024

Scale: Horizontal 1"=10' Vertical N/A

Designed DL Drawn RDC Checked DL Approved JSH Date 6/23/23

Barghausen Consulting Engineers, Inc.
18215 72nd Avenue South
Kent, WA 98032
425.251.6222 **barghausen.com**

Job Number **22085**

Sheet **C12** of **34**

P:\22000s\22085\engineering\22085-CMD.dwg 7/10/2024 8:16 AM RCOX

PORTION OF SE QUARTER OF SEC 27, TWN 20 N, RGE. 4 E, W.M.
CITY OF PUYALLUP, PIERCE COUNTY, WASHINGTON

VAULT DETAILS

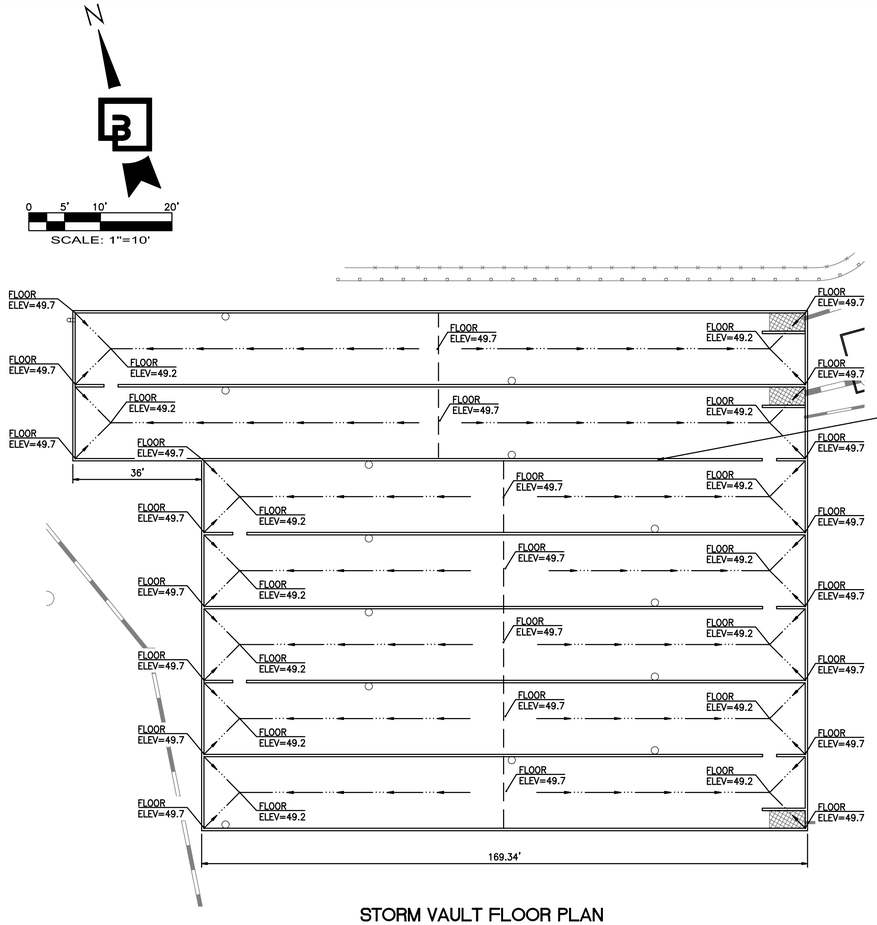

STORM VAULT FLOOR PLAN

1"=20'

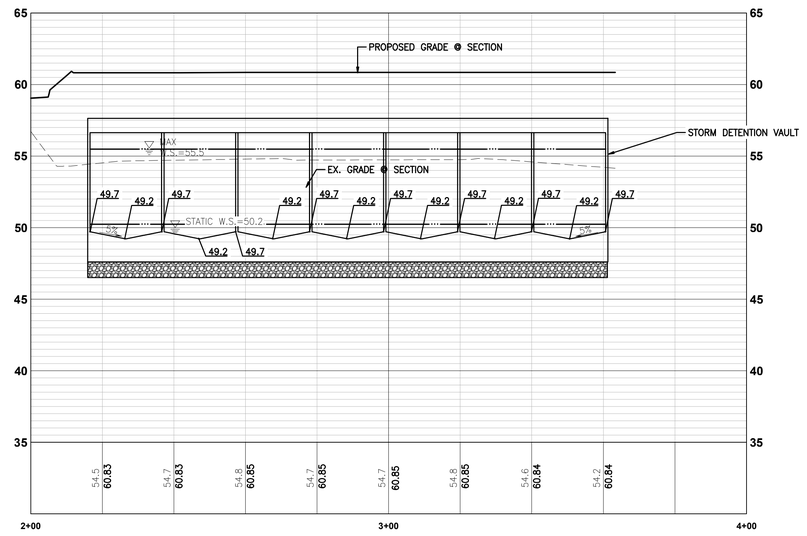

VAULT SECTION V1-V1

1"=20' HORIZ, 1"=5' VERT

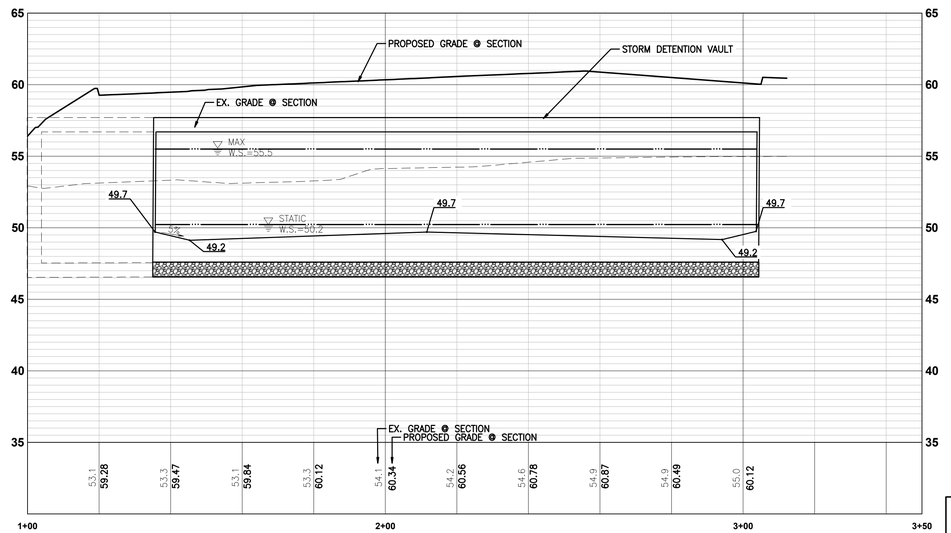

VAULT SECTION V2-V2

1"=20' HORIZ, 1"=5' VERT

APPROVED

BY _____
CITY OF PUYALLUP
DEVELOPMENT ENGINEERING

DATE _____

NOTE: THIS APPROVAL IS VOID AFTER 180 DAYS FROM APPROVAL DATE.
THE CITY WILL NOT BE RESPONSIBLE FOR ERRORS AND/OR OMISSIONS ON THESE PLANS.
FIELD CONDITIONS MAY DICTATE CHANGES TO THESE PLANS AS DETERMINED BY THE DEVELOPMENT ENGINEERING MANAGER.

811 Know what's **below.** **Call** before you dig. Dial 811

No.	Date	By	Ckd.	Appr.	Revision
3	10/03/24	DL	DL	JSG	RESPONSE TO CITY COMMENTS, DATED APRIL 12, 2024
2	03/05/24	DL	DL	JSG	RESPONSE TO CITY COMMENTS, DATED FEBRUARY 06, 2024

Title: **VAULT DETAILS**

FORTRESS - PUYALLUP

For: **CREF3 PUYALLUP OWNER LLC**
11611 SAN VICENTE BLVD
10TH FLOOR
LOS ANGELES, CA 90049

JASON GUY HUSSEY — STATE OF WASHINGTON — 38950 — REGISTERED PROFESSIONAL ENGINEER
10/03/2024

Scale: Horizontal 1"=10' Vertical N/A

Designed DL Drawn RDC Checked DL Approved JGH Date 6/23/23

Barghausen Consulting Engineers, Inc.
18215 72nd Avenue South
Kent, WA 98032
425.251.6222 **barghausen.com**

Job Number **22085**

Sheet **C13** of **34**

P:\22000s\22085\engineering\22085-CMD.dwg 7/10/2024 8:16 AM RCOX

PORTION OF SE QUARTER OF SEC 27, TWN 20 N, RGE. 4 E, W.M.
CITY OF PUYALLUP, PIERCE COUNTY, WASHINGTON

WATER AND SANITARY SEWER PLAN

N

0 15' 30' 60'
SCALE: 1"=30'

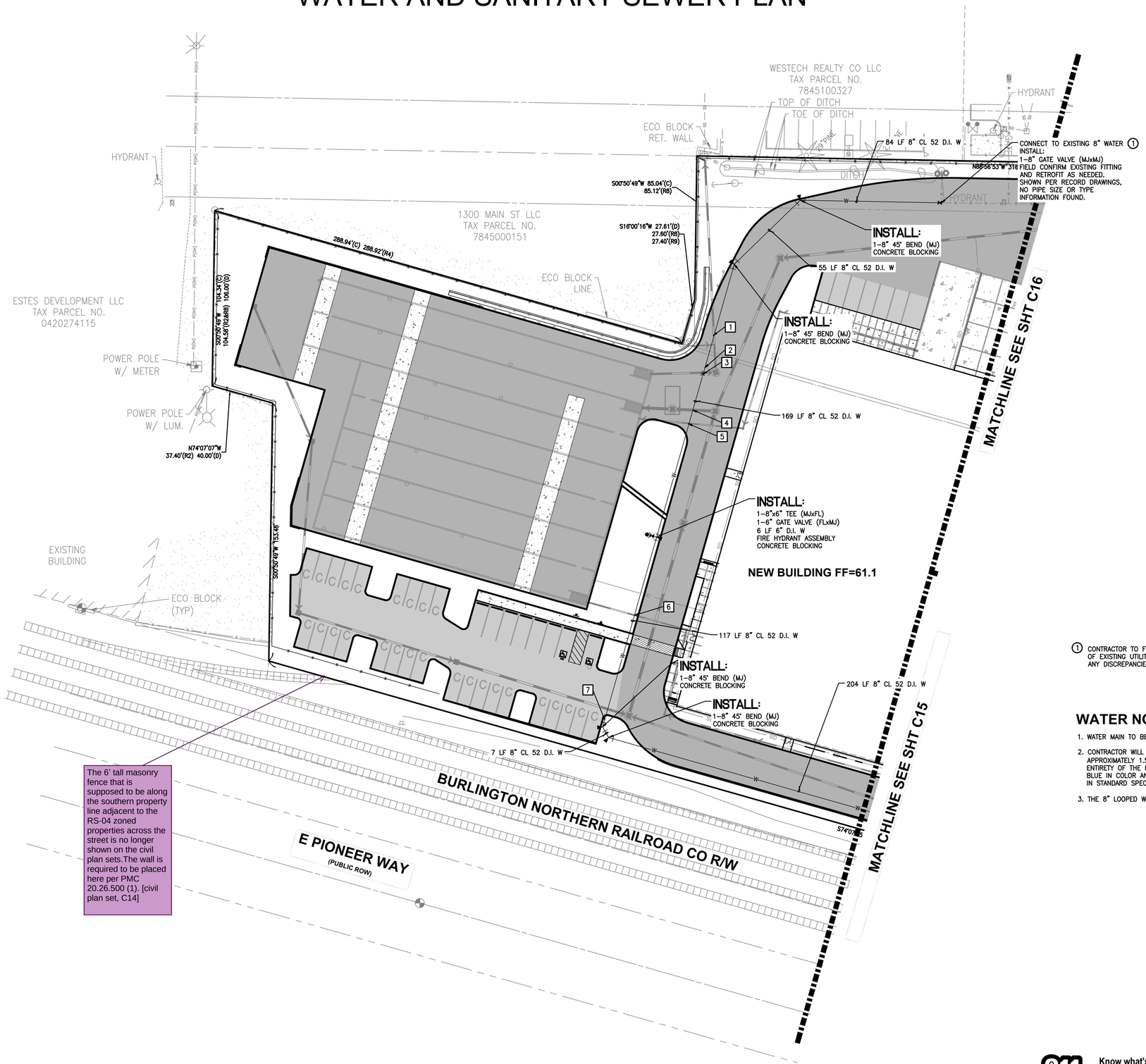

The 6' tall masonry fence that is supposed to be along the southern property line adjacent to the RS-04 zoned properties across the street is no longer shown on the civil plan sets.The wall is required to be placed here per PMC 20.26.500 (1). [civil plan set, C14]

UTILITY CROSSING TABLE:

1 UTILITY CROSSING
IE 8" W=55.9
T/P 12" SD=51.00
SEPARATION=5.5'

2 UTILITY CROSSING
IE 8" W=55.9
T/P 8" SD=51.20
SEPARATION=5.7'

3 UTILITY CROSSING
IE 8" W=56.2
T/P 12" SD=51.20
SEPARATION=5.0'

4 UTILITY CROSSING
IE 8" W=56.2
T/P 18" SD=51.8
SEPARATION=4.4'

5 UTILITY CROSSING
IE 8" W=56.2
T/P 8" SD=55.6
SEPARATION=0.6'

6 UTILITY CROSSING
IE 8" W=55.3
T/P 8" SD=53.7
SEPARATION=1.6'

7 UTILITY CROSSING
IE 8" W=54.2
T/P 15" SD=51.9
SEPARATION=2.3'

① CONTRACTOR TO FIELD VERIFY HORIZONTAL AND VERTICAL LOCATION OF EXISTING UTILITY, POTHOLE AS NECESSARY. NOTIFY ENGINEER OF ANY DISCREPANCIES.

WATER NOTES:

1. WATER MAIN TO BE INSTALLED WITH A MINIMUM COVER OF 36" .
2. CONTRACTOR WILL INSTALL DETECTABLE MARKING TAPE APPROXIMATELY 1.5' ABOVE THE TOP OF THE PIPE ALONG THE ENTIRETY OF THE MAIN AND SERVICES. DETECTABLE TAPE SHALL BE BLUE IN COLOR AND MEET THE MATERIAL REQUIREMENTS SPECIFIED IN STANDARD SPECIFICATION 9-15.18 PER SHT C14
3. THE 8" LOOPED WATER LINE IS "PRIVATE".

APPROVED

BY _____
CITY OF PUYALLUP
DEVELOPMENT ENGINEERING

DATE _____

NOTE: THIS APPROVAL IS VOID AFTER 180 DAYS FROM APPROVAL DATE.
THE CITY WILL NOT BE RESPONSIBLE FOR ERRORS AND/OR OMISSIONS ON THESE PLANS.
FIELD CONDITIONS MAY DICTATE CHANGES TO THESE PLANS AS DETERMINED BY THE DEVELOPMENT ENGINEERING MANAGER.

811 Know what's **below.** **Call** before you dig. Dial 811

No.	Date	By	Ckd.	Appr.	Revision
3	10/03/24	DL	DL	JSG	RESPONSE TO CITY COMMENTS, DATED APRIL 12, 2024
2	03/05/24	DL	DL	JSG	RESPONSE TO CITY COMMENTS, DATED FEBRUARY 06, 2024

Title: **WATER AND SANITARY SEWER PLAN**

FORTRESS - PUYALLUP

For: **CREF3 PUYALLUP OWNER LLC**
11611 SAN VICENTE BLVD
10TH FLOOR
LOS ANGELES, CA 90049

JASON GUY HUBBELL — STATE OF WASHINGTON — 38950 — REGISTERED PROFESSIONAL ENGINEER
10/03/2024

Scale: Horizontal 1"=30' Vertical N/A

Designed DL Drawn RDC Checked DL Approved JGH Date 6/23/23

Barghausen Consulting Engineers, Inc.
18215 72nd Avenue South
Kent, WA 98032
425.251.6222 **barghausen.com**

Job Number **22085**

Sheet **C14** of **34**

P:\22000s\22085\engineering\22085-WS.dwg 5/1/2024 10:33 AM RCOX

PORTION OF SE QUARTER OF SEC 27, TWN 20 N, RGE. 4 E, W.M.
CITY OF PUYALLUP, PIERCE COUNTY, WASHINGTON

WATER AND SANITARY SEWER PLAN

N

0 15' 30' 60'
SCALE: 1"=30'

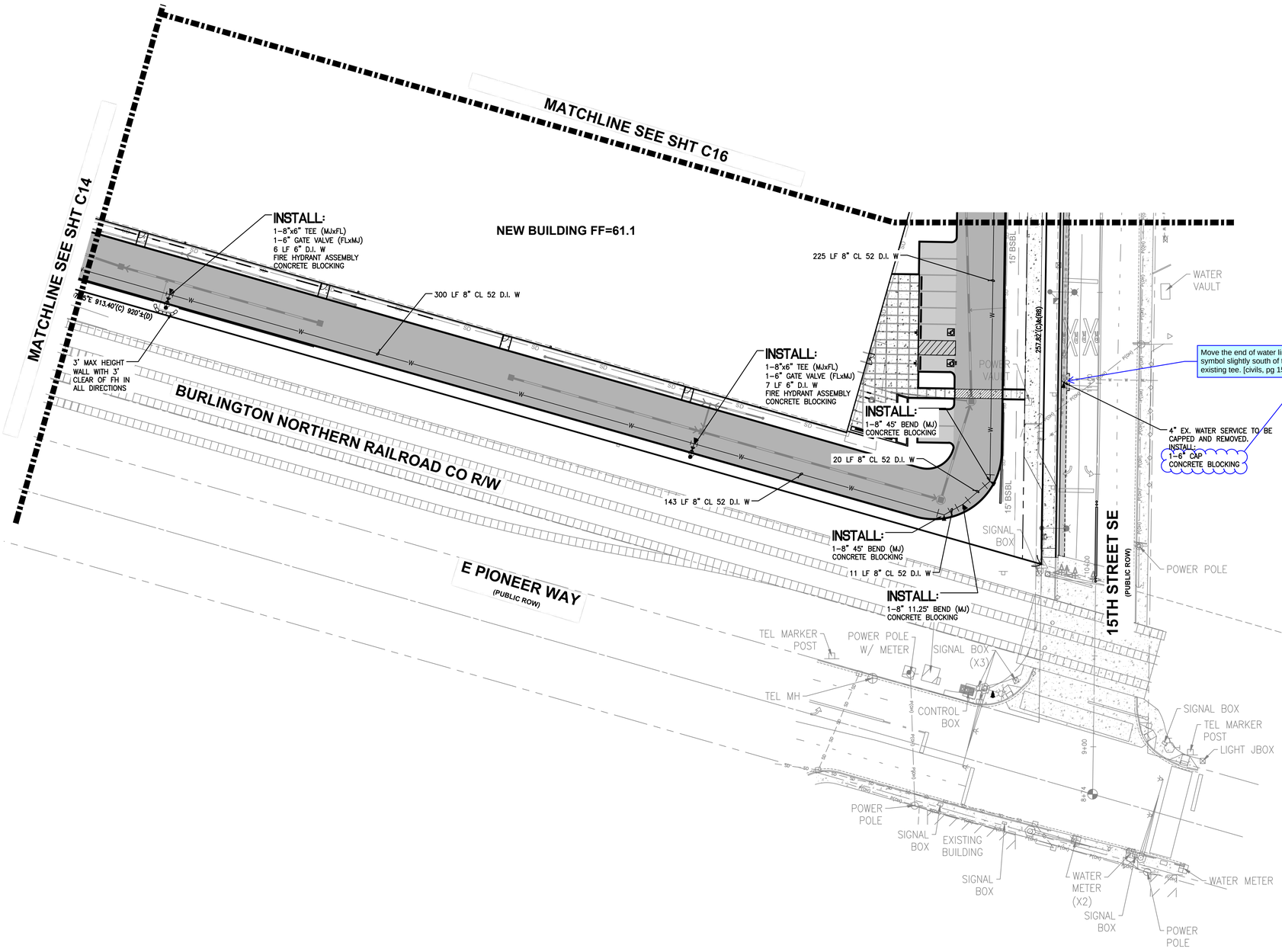

WATER NOTES:

1. WATER MAIN TO BE INSTALLED WITH A MINIMUM COVER OF 36" .
2. CONTRACTOR WILL INSTALL DETECTABLE MARKING TAPE APPROXIMATELY 1.5' ABOVE THE TOP OF THE PIPE ALONG THE ENTIRETY OF THE MAIN AND SERVICES. DETECTABLE TAPE SHALL BE BLUE IN COLOR AND MEET THE MATERIAL REQUIREMENTS SPECIFIED IN STANDARD SPECIFICATION 9-15.18 PER SHT C14
3. THE 8" LOOPED WATER LINE IS "PRIVATE".

APPROVED

BY _____
CITY OF PUYALLUP
DEVELOPMENT ENGINEERING

DATE _____

NOTE: THIS APPROVAL IS VOID AFTER 180 DAYS FROM APPROVAL DATE.
THE CITY WILL NOT BE RESPONSIBLE FOR ERRORS AND/OR OMISSIONS ON THESE PLANS.
FIELD CONDITIONS MAY DICTATE CHANGES TO THESE PLANS AS DETERMINED BY THE DEVELOPMENT ENGINEERING MANAGER.

811 Know what's **below.** **Call** before you dig. Dial 811

No.	Date	By	Ckd.	Appr.	Revision
3	10/03/24	DL	DL	JSG	RESPONSE TO CITY COMMENTS, DATED APRIL 12, 2024
2	03/05/24	DL	DL	JSG	RESPONSE TO CITY COMMENTS, DATED FEBRUARY 06, 2024

Title: **WATER AND SANITARY SEWER PLAN**

FORTRESS - PUYALLUP

For: **CREF3 PUYALLUP OWNER LLC**
11611 SAN VICENTE BLVD
10TH FLOOR
LOS ANGELES, CA 90049

JASON GUY HUBBELL — STATE OF WASHINGTON — 38950 — REGISTERED PROFESSIONAL ENGINEER
10/03/2024

Scale: Horizontal 1"=30' Vertical N/A

Designed DL Drawn RDC Checked DL Approved JGH Date 6/23/23

Barghausen Consulting Engineers, Inc.
18215 72nd Avenue South
Kent, WA 98032
425.251.6222 barghausen.com

Job Number **22085**

Sheet **C15 of 34**

P:\22000s\22085\engineering\22085-WS.dwg 5/1/2024 10:33 AM RCOX

PORTION OF SE QUARTER OF SEC 27, TWN 20 N, RGE. 4 E, W.M.
CITY OF PUYALLUP, PIERCE COUNTY, WASHINGTON

WATER AND SANITARY SEWER PLAN

N

0 15' 30' 60'
SCALE: 1"=30'

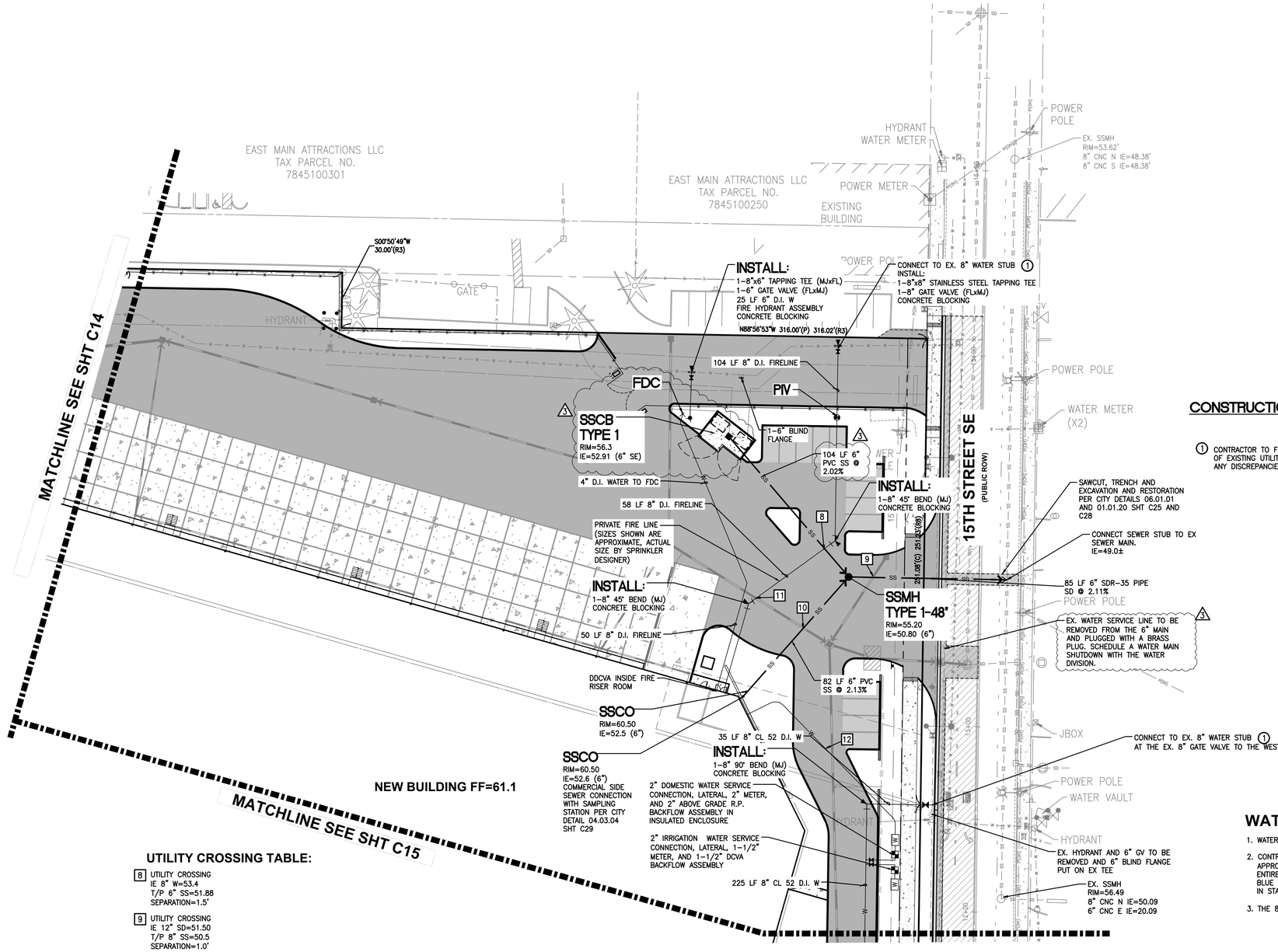

UTILITY CROSSING TABLE:

[8] UTILITY CROSSING
IE 8" W=53.4
T/P 6" SS=51.88
SEPARATION=1.5'

[9] UTILITY CROSSING
IE 12" SD=51.50
T/P 8" SS=50.5
SEPARATION=1.0'

[10] UTILITY CROSSING
T/P 12" SD=49.58
IE 6" SS=51.50
SEPARATION=1.92'

[11] UTILITY CROSSING
IE 8" W=53.4
T/P 12" SD=50.75
SEPARATION=2.6'

CONSTRUCTION NOTES:

(1) CONTRACTOR TO FIELD VERIFY HORIZONTAL AND VERTICAL LOCATION OF EXISTING UTILITY, POTHOLE AS NECESSARY. NOTIFY ENGINEER OF ANY DISCREPANCIES.

WATER NOTES:

1. WATER MAIN TO BE INSTALLED WITH A MINIMUM COVER OF 36" .
2. CONTRACTOR WILL INSTALL DETECTABLE MARKING TAPE APPROXIMATELY 1.5' ABOVE THE TOP OF THE PIPE ALONG THE ENTIRETY OF THE MAIN AND SERVICES. DETECTABLE TAPE SHALL BE BLUE IN COLOR AND MEET THE MATERIAL REQUIREMENTS SPECIFIED IN STANDARD SPECIFICATION 9-15.18 PER SHT C14
3. THE 8" LOOPED WATER LINE IS "PRIVATE".

FIRE HYDRANT/FDC LOCATION/ACCESS APPROVED	APPROVED
BY _____ CITY OF PUYALLUP FIRE CODE OFFICIAL	BY _____ CITY OF PUYALLUP DEVELOPMENT ENGINEERING
DATE _____	DATE _____
NOTE: THIS APPROVAL IS VOID AFTER 180 DAYS FROM APPROVAL DATE. THE CITY WILL NOT BE RESPONSIBLE FOR ERRORS AND/OR OMISSIONS ON THESE PLANS. FIELD CONDITIONS MAY DICTATE CHANGES TO THESE PLANS AS DETERMINED BY THE FIRE CODE OFFICIAL.	NOTE: THIS APPROVAL IS VOID AFTER 180 DAYS FROM APPROVAL DATE. THE CITY WILL NOT BE RESPONSIBLE FOR ERRORS AND/OR OMISSIONS ON THESE PLANS. FIELD CONDITIONS MAY DICTATE CHANGES TO THESE PLANS AS DETERMINED BY THE DEVELOPMENT ENGINEERING MANAGER.

811 Know what's below. Call before you dig. Dial 811

No.	Date	By	Ckd.	Appr.	Revision
3	10/03/24	DL	DL	JSG	RESPONSE TO CITY COMMENTS, DATED APRIL 12, 2024
2	05/05/24	DL	DL	JSG	RESPONSE TO CITY COMMENTS, DATED FEBRUARY 06, 2024

Title: WATER AND SANITARY SEWER PLAN

FORTRESS - PUYALLUP

For: CREF3 PUYALLUP OWNER LLC
11611 SAN VICENTE BLVD
10TH FLOOR
LOS ANGELES, CA 90049

JASON GUY HUBBELL — STATE OF WASHINGTON — 38950 — REGISTERED PROFESSIONAL ENGINEER
10/03/2024

Scale: Horizontal 1"=30' Vertical N/A

Designed DL Drawn RDC Checked DL Approved JGH Date 6/23/23

Barghausen Consulting Engineers, Inc.
18215 72nd Avenue South
Kent, WA 98032
425.251.6222 barghausen.com

Job Number 22085

Sheet C16 of 34

P:\22000s\22085\engineering\22085-WS.dwg 5/1/2024 10:33 AM RCOX

PORTION OF SE QUARTER OF SEC 27, TWN 20 N, RGE. 4 E, W.M.
CITY OF PUYALLUP, PIERCE COUNTY, WASHINGTON

RIGHT-OF-WAY DEMOLITION PLAN

0 10' 20' 40'
SCALE: 1"=20'

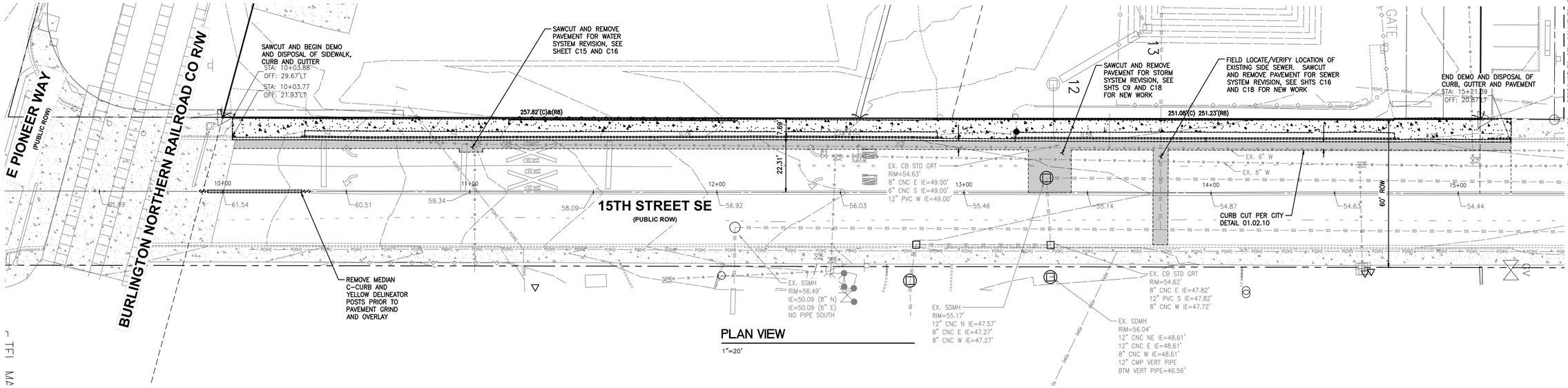

PLAN VIEW
1"=20'

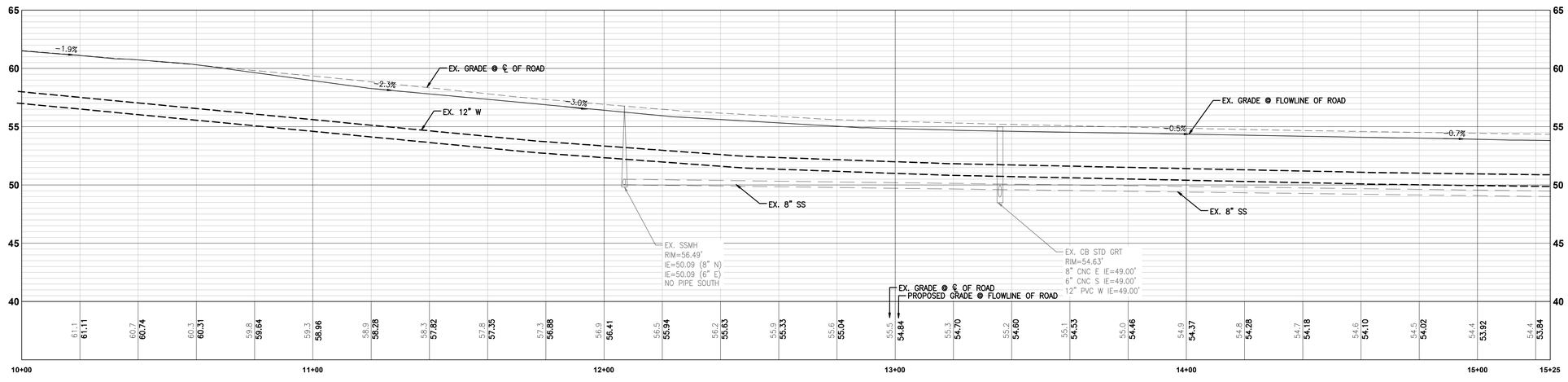

PROFILE VIEW
1"=20' HORIZ, 1"=5' VERT

APPROVED

BY _____
CITY OF PUYALLUP
DEVELOPMENT ENGINEERING

DATE _____

NOTE: THIS APPROVAL IS VOID AFTER 180 DAYS FROM APPROVAL DATE.
THE CITY WILL NOT BE RESPONSIBLE FOR ERRORS AND/OR OMISSIONS ON THESE PLANS.
FIELD CONDITIONS MAY DICTATE CHANGES TO THESE PLANS AS DETERMINED BY THE DEVELOPMENT ENGINEERING MANAGER.

811 Know what's **below.** **Call** before you dig. Dial 811

No.	Date	By	Ckd.	Revision
3	10/03/24	DL	JSG	RESPONSE TO CITY COMMENTS, DATED APRIL 12, 2024
2	03/05/24	DL	JSG	RESPONSE TO CITY COMMENTS, DATED FEBRUARY 06, 2024

Title: **RIGHT-OF-WAY DEMOLITION PLAN**

FORTRESS - PUYALLUP

For: **CREF3 PUYALLUP OWNER LLC**
11611 SAN VICENTE BLVD
10TH FLOOR
LOS ANGELES, CA 90049

JASON GUY HUBBELL — STATE OF WASHINGTON — 38950 — REGISTERED PROFESSIONAL ENGINEER
10/03/2024

Scale: Horizontal 1"=20' Vertical N/A

Designed DL Drawn RDC Checked DL Approved JGH Date 6/23/23

Barghausen Consulting Engineers, Inc.
18215 72nd Avenue South
Kent, WA 98032
425.251.6222 **barghausen.com**

Job Number **22085**

Sheet **C17 of 34**

P:\22000s\22085\engineering\22085-R-demo.dwg 4/19/2024 1:17 PM RCOX

PORTION OF SE QUARTER OF SEC 27, TWN 20 N, RGE. 4 E, W.M.
CITY OF PUYALLUP, PIERCE COUNTY, WASHINGTON

FRONTAGE IMPROVEMENT PLAN

SCALE: 1"=20'

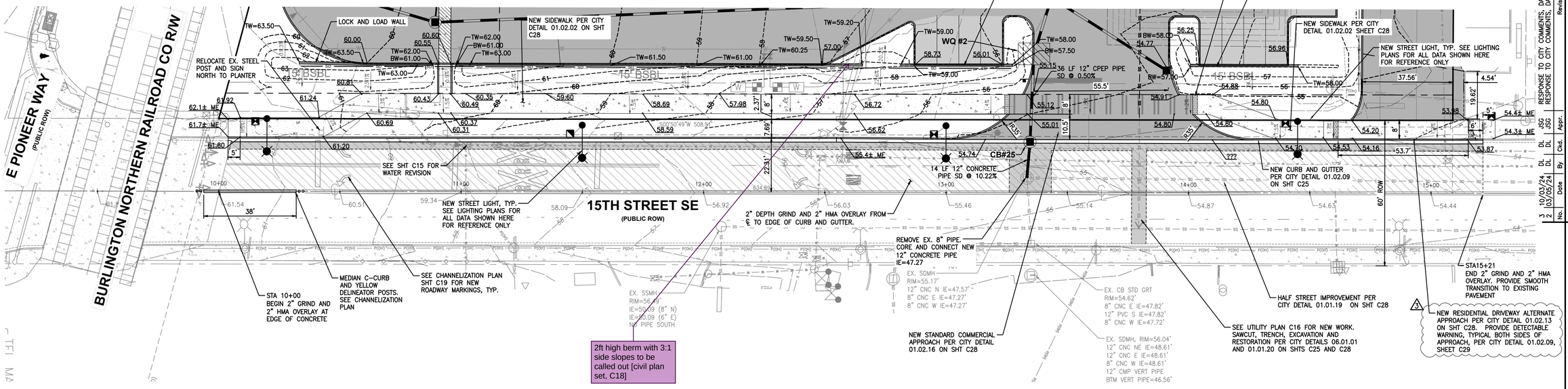

PLAN VIEW

1"=20'

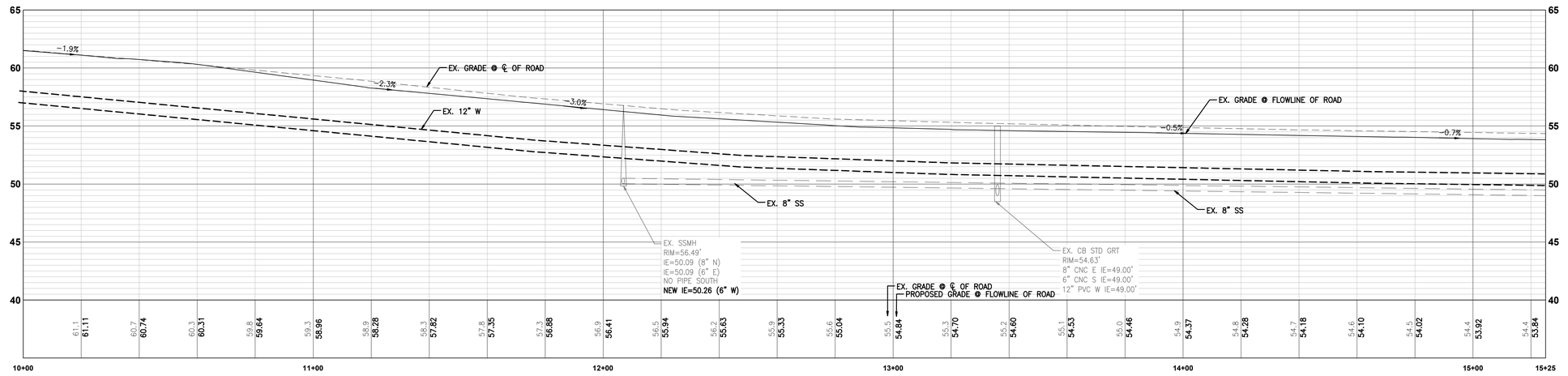

PROFILE VIEW

1"=20' HORIZ, 1"=5' VERT

APPROVED

BY _____
CITY OF PUYALLUP
DEVELOPMENT ENGINEERING

DATE _____

NOTE: THIS APPROVAL IS VOID AFTER 180 DAYS FROM APPROVAL DATE.
THE CITY WILL NOT BE RESPONSIBLE FOR ERRORS AND/OR OMISSIONS ON THESE PLANS.
FIELD CONDITIONS MAY DICTATE CHANGES TO THESE PLANS AS DETERMINED BY THE DEVELOPMENT ENGINEERING MANAGER.

811 Know what's **below.** **Call** before you dig. Dial 811

No.	Date	By	Ckd.	Appr.	Revision
3	10/03/24	DL	DL	JSG	RESPONSE TO CITY COMMENTS, DATED APRIL 12, 2024
2	05/06/24	DL	DL	JSG	RESPONSE TO CITY COMMENTS, DATED FEBRUARY 06, 2024

Title: **FRONTAGE IMPROVEMENT PLAN**

FORTRESS - PUYALLUP

For: **CREF3 PUYALLUP OWNER LLC**
11611 SAN VICENTE BLVD
10TH FLOOR
LOS ANGELES, CA 90049

JASON GUY HUBBELL — STATE OF WASHINGTON — 38950 — REGISTERED PROFESSIONAL ENGINEER
10/03/2024

Scale: Horizontal 1"=20' Vertical N/A

Designed DL Drawn RDC Checked DL Approved JGH Date 6/23/23

Barghausen Consulting Engineers, Inc.
18215 72nd Avenue South
Kent, WA 98032
425.251.6222 **barghausen.com**

Job Number **22085**

Sheet **C18** of **34**

P:\22000s\22085\engineering\22085-R.dwg 4/30/2024 11:54 AM RCOX

PORTION OF SE QUARTER OF SEC 27, TWN 20 N, RGE. 4 E, W.M.
CITY OF PUYALLUP, PIERCE COUNTY, WASHINGTON

CHANNELIZATION PLAN

0 10' 20' 40'
SCALE: 1"=20'

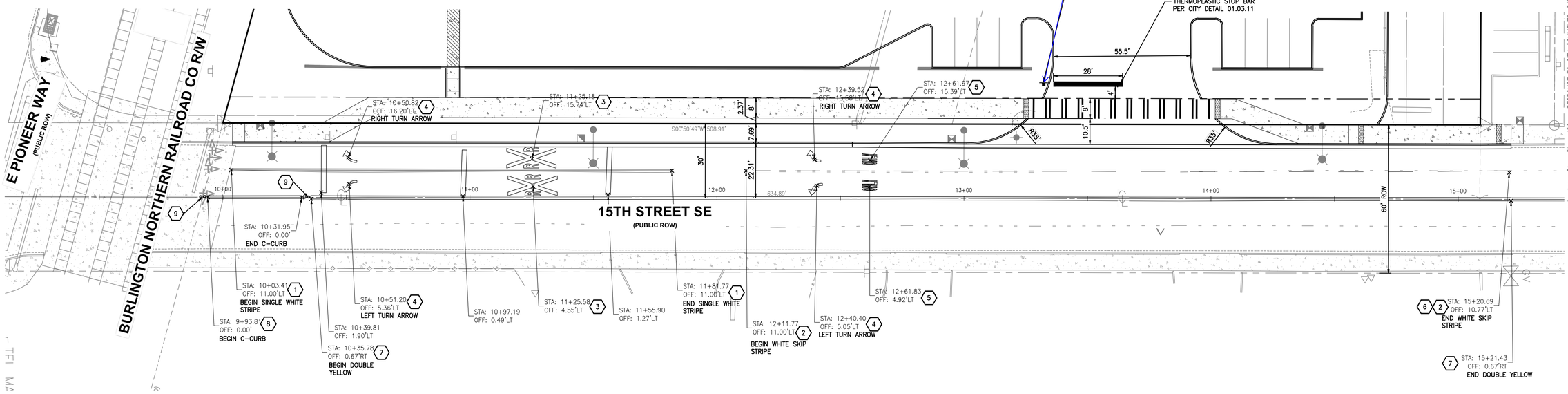

PLAN VIEW
1"=20'

CONSTRUCTION NOTES:

NOTE: ALL PAVEMENT MARKINGS SHALL BE THERMOPLASTIC. LANE STRIPING SHALL BE MMA.

1. SOLID 8" WHITE THERMOPLASTIC GORE STRIPE
2. WHITE SKIP STRIPE PER CITY OF PUYALLUP DETAIL 01.03.10
3. RAILROAD CROSSING SYMBOLS PER CITY OF PUYALLUP DETAIL 01.03.12
4. PAVEMENT ARROW SYMBOL PER CITY OF PUYALLUP DETAIL 01.03.14
5. PAVEMENT MARKER "ONLY" PER CITY OF PUYALLUP DETAIL 01.03.15
6. MATCH INTO EXISTING PAVEMENT STRIPES
7. SOLID YELLOW CENTER LANE MARKING (20") PER CITY OF PUYALLUP DETAIL 01.03.10
8. INSTALL NEW MEDIAN C-CURB (TO MATCH EXISTING) AFTER PAVEMENT OVERLAY IS COMPLETE.
9. INSTALL (2) NEW YELLOW DELINEATOR POSTS (TO MATCH EXISTING) AFTER PAVEMENT OVERLAY IS COMPLETE.

No.	Date	By	Ckd.	Appr.	Revision
3	10/03/24	DL	DL	JSG	RESPONSE TO CITY COMMENTS, DATED APRIL 12, 2024
2	05/05/24	DL	DL	JSG	RESPONSE TO CITY COMMENTS, DATED FEBRUARY 06, 2024

Title: CHANNELIZATION PLAN

FORTRESS - PUYALLUP

For: CREF3 PUYALLUP OWNER LLC
11611 SAN VICENTE BLVD
10TH FLOOR
LOS ANGELES, CA 90049

JASON GUY HUBBELL — STATE OF WASHINGTON — 38950 — REGISTERED PROFESSIONAL ENGINEER
10/03/2024

Scale: Horizontal 1"=20' Vertical N/A

Designed DL Drawn RDC Checked DL Approved JGH Date 6/23/23

Barghausen Consulting Engineers, Inc.
18215 72nd Avenue South
Kent, WA 98032
425.251.6222
barghausen.com

Job Number 22085

Sheet C19 of 34

APPROVED

BY _____
CITY OF PUYALLUP
DEVELOPMENT ENGINEERING

DATE _____

NOTE: THIS APPROVAL IS VOID AFTER 180 DAYS FROM APPROVAL DATE.
THE CITY WILL NOT BE RESPONSIBLE FOR ERRORS AND/OR OMISSIONS ON THESE PLANS.
FIELD CONDITIONS MAY DICTATE CHANGES TO THESE PLANS AS DETERMINED BY THE DEVELOPMENT ENGINEERING MANAGER.

811 Know what's below. Call before you dig. Dial 811

P:\22000s\22085\engineering\22085-R-CHAN.dwg 4/19/2024 12:41 PM RCOX

PORTION OF SE QUARTER OF SEC 27, TWN 20 N, RGE. 4 E, W.M.
CITY OF PUYALLUP, PIERCE COUNTY, WASHINGTON

SITE SECTIONS

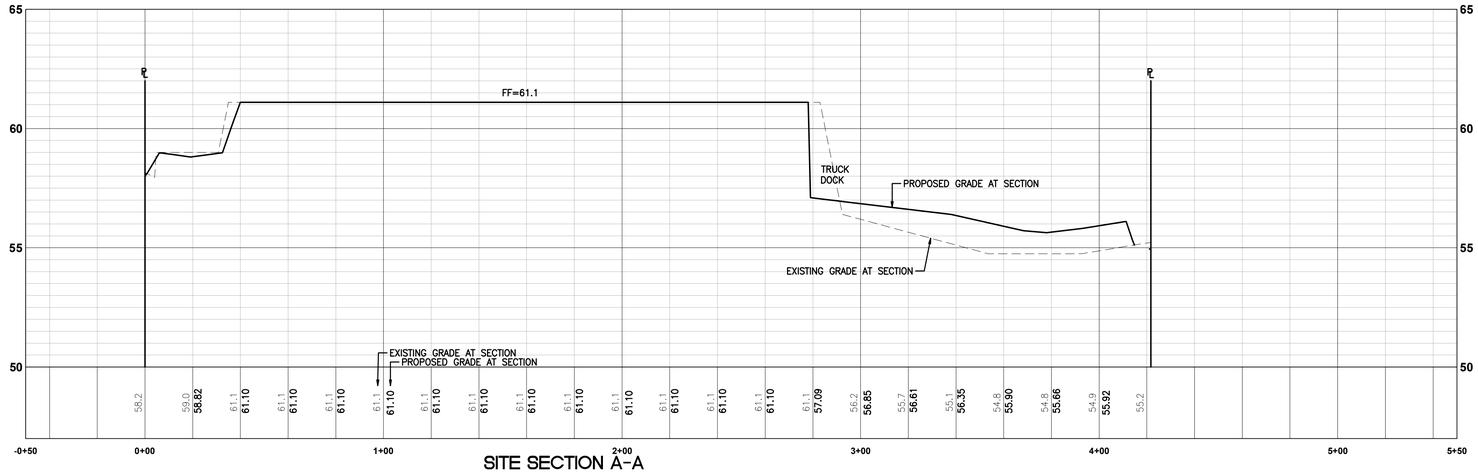

SITE SECTION A-A

1"=30' HORIZ, 1"=3' VERT

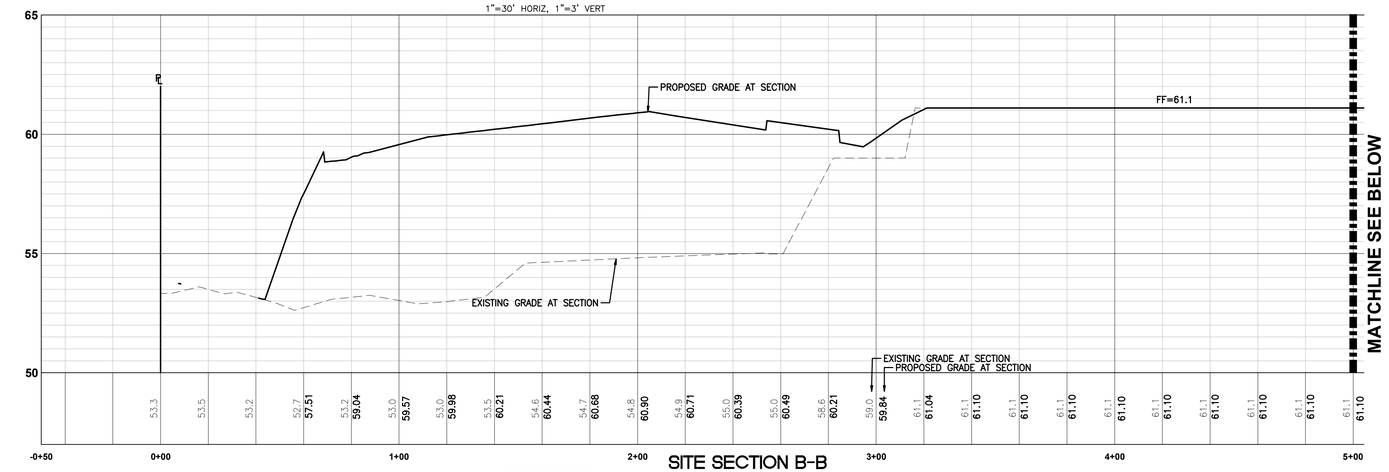

SITE SECTION B-B

1"=30' HORIZ, 1"=3' VERT

Random markup

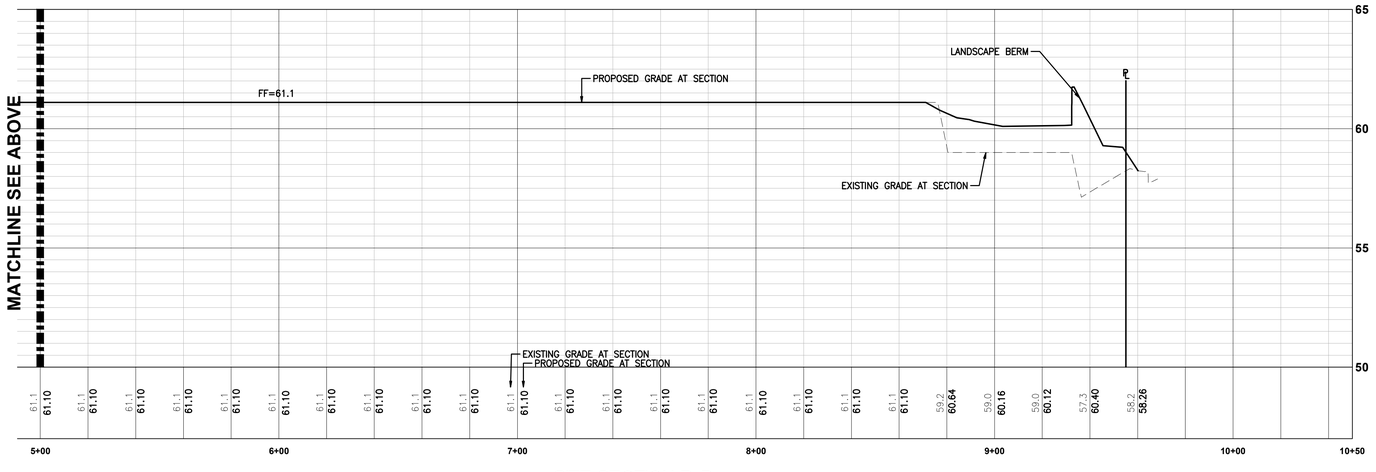

SITE SECTION B-B

1"=30' HORIZ, 1"=3' VERT

APPROVED

BY _____
CITY OF PUYALLUP
DEVELOPMENT ENGINEERING

DATE _____

NOTE: THIS APPROVAL IS VOID AFTER 180 DAYS FROM APPROVAL DATE.
THE CITY WILL NOT BE RESPONSIBLE FOR ERRORS AND/OR OMISSIONS ON THESE PLANS.
FIELD CONDITIONS MAY DICTATE CHANGES TO THESE PLANS AS DETERMINED BY THE DEVELOPMENT ENGINEERING MANAGER.

No.	Date	By	Ckd.	Appr.	Revision
3	10/03/24	DL	DL	JSG	RESPONSE TO CITY COMMENTS, DATED APRIL 12, 2024
2	03/05/24	DL	DL	JSG	RESPONSE TO CITY COMMENTS, DATED FEBRUARY 06, 2024

Title: **SITE SECTIONS**

FORTRESS - PUYALLUP

For: **CREF3 PUYALLUP OWNER LLC**
11611 SAN VICENTE BLVD
10TH FLOOR
LOS ANGELES, CA 90049

JASON GUY HUSSEY — STATE OF WASHINGTON — 38950 — REGISTERED PROFESSIONAL ENGINEER
10/03/2024

Scale: Horizontal 1"=30' Vertical 1"=3'

Designed DL Drawn RDC Checked DL Approved JGH Date 6/23/23

Barghausen Consulting Engineers, Inc.
18215 72nd Avenue South
Kent, WA 98032
425.251.6222 **barghausen.com**

Job Number **22085**

Sheet **C20** of **34**

P:\22000s\22085\engineering\22085-SECTIONS.dwg 4/19/2024 1:16 PM RCOX

PORTION OF SE QUARTER OF SEC 27, TWN 20 N, RGE. 4 E, W.M.
CITY OF PUYALLUP, PIERCE COUNTY, WASHINGTON

CONSTRUCTION NOTES AND DETAILS

BLOCK AND GRAVEL FILTER

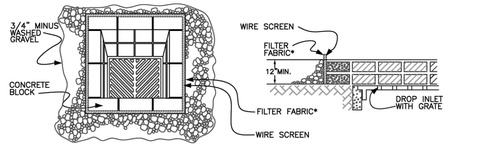

* MIRAFI 140-N OR EQUIVALENT

FILTER FABRIC FENCE

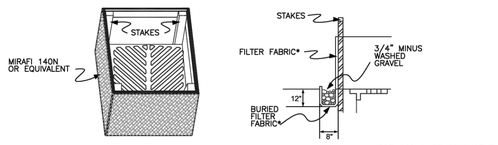

* MIRAFI 140-N OR EQUIVALENT

STRAW BALE BARRIER

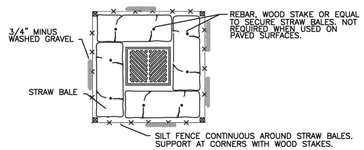

CITY OF PUYALLUP
DEVELOPMENT ENGINEERING and PUBLIC WORKS DEPARTMENTS

STORM DRAIN BARRIERS

DRAWN BY	CHECKED BY	APPROVED BY	REVISED BY	CITY STANDARD
LINDA LANSING	LINDA LIAN	COLLEEN HARRIS	XXXX	02.03.05
FILE NAME: F:\DWG\COMMON\STDS\CITY\2009\02_SD\02.03.05		DATE APPROVED: 09/01/1992	DATE REVISED: 06/01/2003	SCALE: NTS

CONDITIONS WHERE PRACTICE APPLIES

1. BLOCK AND GRAVEL FILTER – APPLICABLE FOR AREAS GREATER THAN 5% SLOPE.
2. FILTER FABRIC FENCE – APPLICABLE WHERE THE INLET DRAINS A RELATIVELY SMALL (ONE ACRE OR LESS) AND FLAT AREA (LESS THAN 5% SLOPE).
3. STRAW BALE BARRIER – APPLICABLE WHERE INLET DRAINS A RELATIVELY FLAT DISTURBED AREA (LESS THAN 5% SLOPE) IN WHICH SHEET FLOW (NOT EXCEEDING 0.5 FT/SEC.) OCCURES. BARRIERS OF THIS TYPE SHOULD NOT BE PLACED AROUND INLETS RECEIVING CONCENTRATED FLOWS SUCH AS THOSE ALONG MAJOR STREETS AND HIGHWAYS.

1. BLOCK AND GRAVEL FILTER – INSTALLATION PROCEDURE

A: PLACE WIRE MESH OVER THE DROP INLET SO THAT THE WIRE EXTENDS A MINIMUM OF ONE FOOT BEYOND EACH SIDE OF THE INLET STRUCTURE. USE WIRE SCREEN WITH 1/2-INCH OPENINGS. IF MORE THAN ONE STRIP OF MESH IS NECESSARY, OVERLAP THE STRIPS. PLACE FILTER FABRIC* OVER WIRE MESH.

B: PLACE CONCRETE BLOCKS LENGTHWISE ON THEIR SIDES IN A SINGLE ROW AROUND THE PERIMETER OF THE INLET, SO THAT THE OPEN ENDS FACE OUTWARD, NOT UPWARD. THE ENDS OF ADJACENT BLOCKS SHOULD ABUT. THE HIEGHT OF THE BARRIER CAN BE VARIED, DEPENDING ON DESIGN NEEDS, BY STACKING COMBINATIONS OF BLOCKS THAT ARE 4-INCH, 8-INCH AND 12-INCH WIDE. THE ROW OF BLOCKS SHOULD BE AT LEAST 12-INCHES BUT NO GREATER THAN 24-INCHES HIGH.

C: PLACE WIRE SCREEN OVER THE OVERSIDE VERTICAL FACE (OPEN END) OF THE CONCRETE BLOCKS TO PREVENT STONES FROM BEING WASHED THROUGH THE BLOCKS. USE WIRE SCREEN WITH 1/2-INCH OPENINGS.

D: PILE STONES AGAINST THE WIRE MESH TO THE TOP OF THE BLOCKS. USE 3/4" MINUS WASHED GRAVEL.

2. FILTER FABRIC FENCE – INSTALLATION PROCEDURE

A: PLACE 2-INCH BY 2-INCH WOODEN STAKES AROUND THE PERIMETER OF THE INLET A MAXIMUM OF 3 FEET APART AND DRIVE THEM AT LEAST 8-INCHES INTO THE GROUND. THE STAKES MUST BE AT LEAST 3 FEET LONG.

B: EXCAVATE A TRENCH APPROXIMATELY 8-INCHES WIDE AND 12-INCHES DEEP AROUND THE OUTSIDE PERIMETER OF THE STAKES.

C: STAPLE THE FILTER FABRIC* TO THE WOODEN STAKES SO THAT 32-INCHES OF THE FABRIC EXTENDS AND CAN BE FORMED INTO THE TRENCH, AND USE HEAVY-DUTY WIRE STAPLES AT LEAST 1/2-INCHES LONG.

D: BACKFILL THE TRENCH WITH 3/4-INCH MINUS WASHED GRAVEL ALL THE WAY AROUND.

3. STRAW BALE BARRIER – INSTALLATION PROCEDURE

A: EXCAVATE A 4-INCH DEEP TRENCH AROUND THE INLET. MAKE THE TRENCH AS WIDE AS A STRAW BALE.

B: ORIENT STRAW BALES WITH THE BINDINGS AROUND THE SIDES OF THE BALES RATHER THAN OVER AND UNDER THE BALES.

C: PLACE BALES LENGTHWISE AROUND THE INLET AND PRESS THE ENDS OF ADJACENT BALES SECURELY IN PLACE.

D: DRIVE TWO 2-INCH BY 2-INCH STAKES THROUGH EACH BALE TO ANCHOR THE BALE SECURELY IN PLACE.

E: BACKFILL THE EXCAVATED SOIL AND COMPACT IT AGAINST THE BALE.

F: WEDGE LOOSE STRAW BETWEEN BALES TO PREVENT WATER FROM FLOWING BETWEEN BALES.

* MIRAFI 140-N OR EQUIVALENT

CITY OF PUYALLUP
DEVELOPMENT ENGINEERING and PUBLIC WORKS DEPARTMENTS

STORM DRAIN BARRIERS NOTES

DRAWN BY	CHECKED BY	APPROVED BY	REVISED BY	CITY STANDARD
LINDA LANSING	LINDA LIAN	COLLEEN HARRIS	XXXX	02.03.06
FILE NAME: F:\DWG\COMMON\STDS\CITY\2009\02_SD\02.03.06		DATE APPROVED: 09/01/1992	DATE REVISED: 06/01/2003	SCALE: NTS

NOTE:

1. GEOTEXTILE MIRAFI 500 X OR APPROVED EQUAL SHALL BE PLACED UNDER THE ENTIRETY OF THE TEMPORARY ENTRANCE.
2. ADDITIONAL ROCK SHALL BE ADDED PERIODICALLY TO MAINTAIN PROPER FUNCTION OF THE PAD.
3. IF THE PAD DOES NOT ADEQUATELY REMOVE THE MUD FROM THE VEHICLE'S WHEELS, THE WHEELS SHALL BE HOSED OFF BEFORE THE VEHICLE ENTERS A PAVED STREET. THE WASHING SHALL BE DONE ON AN AREA COVERED WITH CRUSHED ROCK AND WASH WATER SHALL DRAIN TO A SEDIMENT RETENTION FACILITY OR THROUGH A SILT FENCE.

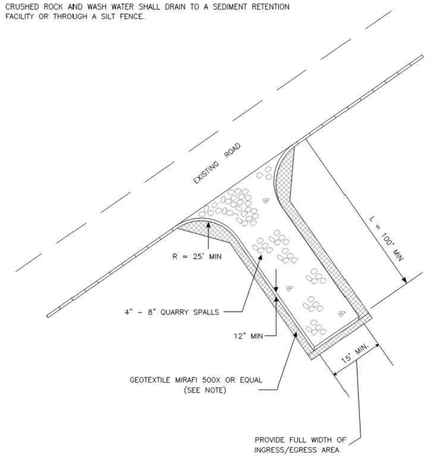

CITY OF PUYALLUP
DEVELOPMENT ENGINEERING and PUBLIC WORKS DEPARTMENTS

TEMPORARY CONSTRUCTION ENTRANCE

DRAWN BY	CHECKED BY	APPROVED BY	REVISED BY	CITY STANDARD
JIM EBEN-ESVOBODA	LINDA LIAN	COLLEEN HARRIS	XXXX	05.01.01
FILE NAME: F:\DWG\COMMON\STDS\CITY\2009\05_GRD\05.01.05.01.01		DATE APPROVED: 07/01/2005	DATE REVISED: XX/XX/XX	SCALE: 1:01

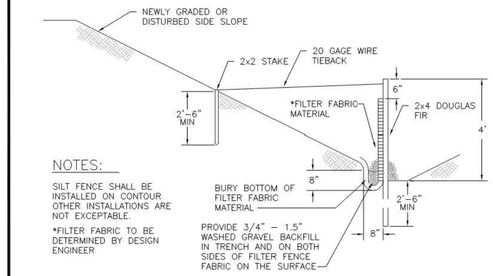

NOTES:

SILT FENCE SHALL BE INSTALLED ON CONTOUR OTHER INSTALLATIONS ARE NOT EXCEPTABLE.

*FILTER FABRIC TO BE DETERMINED BY DESIGN ENGINEER

TYPICAL CROSS SECTION

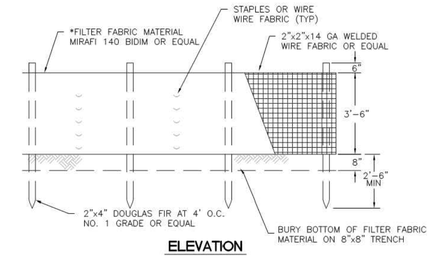

ELEVATION

CITY OF PUYALLUP
DEVELOPMENT ENGINEERING and PUBLIC WORKS DEPARTMENTS

SILTATION FENCE

DRAWN BY	CHECKED BY	APPROVED BY	REVISED BY	CITY STANDARD
LINDA LANSING	LINDA LIAN	COLLEEN HARRIS	XXXX	02.03.02
FILE NAME: F:\DWG\COMMON\STDS\CITY\2009\02_SD\02.03.02		DATE APPROVED: 09/01/1992	DATE REVISED: 06/01/2003	SCALE: NTS

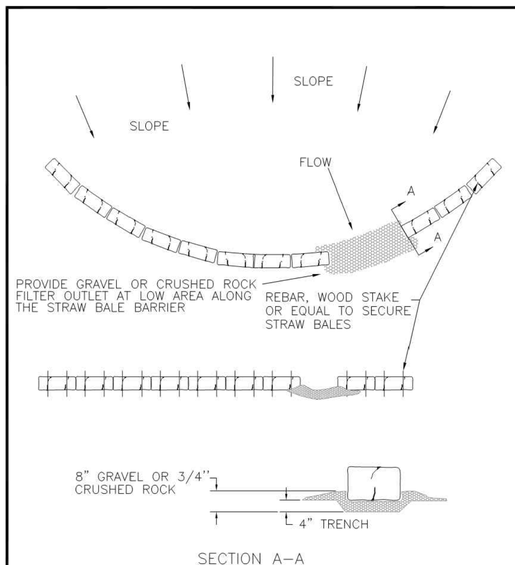

SECTION A–A

CITY OF PUYALLUP
DEVELOPMENT ENGINEERING and PUBLIC WORKS DEPARTMENTS

BARRIER WITH GRAVEL OUTLET

DRAWN BY	CHECKED BY	APPROVED BY	REVISED BY	CITY STANDARD
LINDA LANSING	LINDA LIAN	COLLEEN HARRIS	XXXX	02.03.04
FILE NAME: F:\DWG\COMMON\STDS\CITY\2009\02_SD\02.03.04		DATE APPROVED: 09/01/1992	DATE REVISED: 06/01/2003	SCALE: NTS

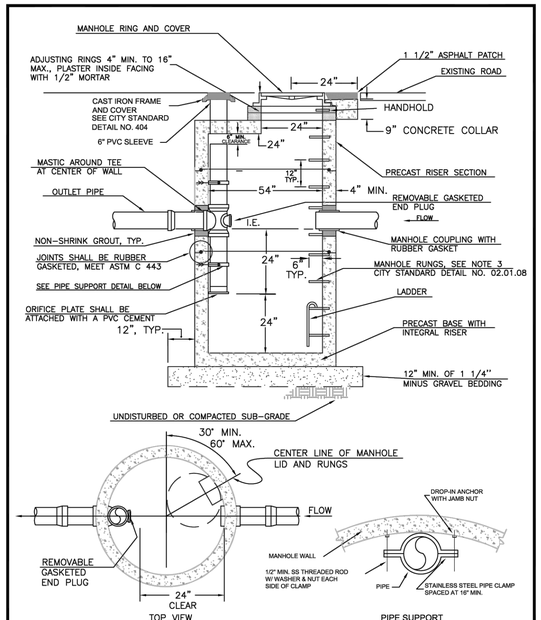

CITY OF PUYALLUP
DEVELOPMENT ENGINEERING and PUBLIC WORKS DEPARTMENTS

FLOW CONTROL MANHOLE WITH FLAT TOP

DRAWN BY	CHECKED BY	APPROVED BY	REVISED BY	CITY STANDARD
LINDA LANSING	LINDA LIAN	COLLEEN HARRIS	XXXX	02.01.07
FILE NAME: F:\DWG\COMMON\STDS\CITY\2009\01_MH\02.01.07		DATE APPROVED: 09/01/1992	DATE REVISED: 06/01/2003	SCALE: NTS

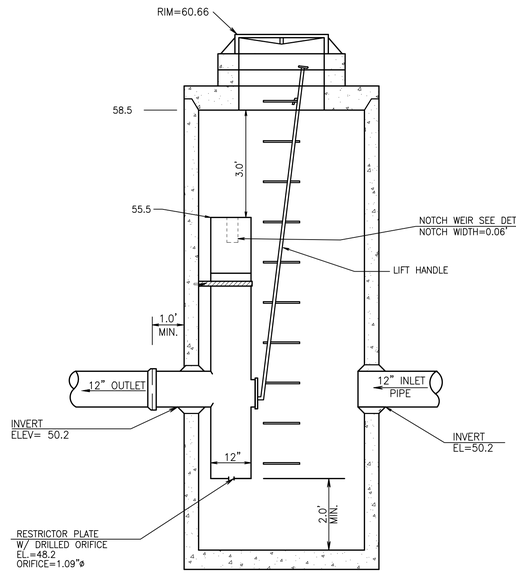

NOTE:
DETAIL PROVIDED FOR ELEVATIONS ONLY. SEE CITY OF PUYALLUP FLOW CONTROL MANHOLE DETAIL FOR DETAILED MANHOLE SPECIFICATIONS.

SDMH #1 CONTROL STRUCTURE TYPE 2-54"

SCALE=1"=2'

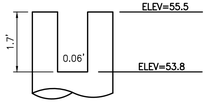

NOTCH WEIR

NTS

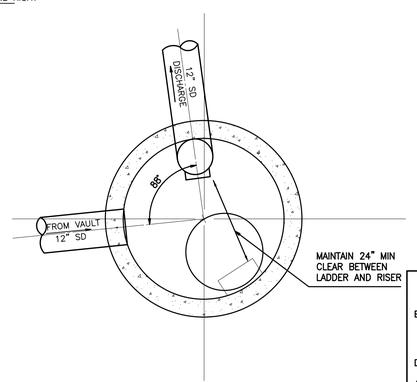

PLAN VIEW

SCALE: 1"=2'

APPROVED

BY _____
CITY OF PUYALLUP
DEVELOPMENT ENGINEERING

DATE _____

NOTE: THIS APPROVAL IS VOID AFTER 180 DAYS FROM APPROVAL DATE.
THE CITY WILL NOT BE RESPONSIBLE FOR ERRORS AND/OR OMISSIONS ON THESE PLANS.
FIELD CONDITIONS MAY DICTATE CHANGES TO THESE PLANS AS DETERMINED BY THE DEVELOPMENT ENGINEERING MANAGER.

No.	Date	By	Ckd.	Appr.	Revision
3	10/03/24	DL	DL	JSG	RESPONSE TO CITY COMMENTS, DATED APRIL 12, 2024
2	03/05/24	DL	DL	JSG	RESPONSE TO CITY COMMENTS, DATED FEBRUARY 06, 2024

Title: **CONSTRUCTION NOTES AND DETAILS**

FORTRESS - PUYALLUP

For:
CREF3 PUYALLUP OWNER LLC
11611 SAN VICENTE BLVD
10TH FLOOR
LOS ANGELES, CA 90049

JASON GUY HUBBELL — STATE OF WASHINGTON — 38950 — REGISTERED PROFESSIONAL ENGINEER
10/03/2024

Scale: Horizontal 1 Vertical 1

Designed DL | Drawn RDC | Checked DL | Approved JGH | Date 6/23/23

Barghausen Consulting Engineers, Inc.
18215 72nd Avenue South
Kent, WA 98032
425.251.6222
barghausen.com

Job Number **22085**

Sheet **C21 of 34**

P:\22000s\22085\engineering\22085-ED-CIVIL.dwg 2/13/2024 11:20 AM RCOX

PORTION OF SE QUARTER OF SEC 27, TWN 20 N, RGE. 4 E, W.M.
CITY OF PUYALLUP, PIERCE COUNTY, WASHINGTON

CONSTRUCTION DETAILS

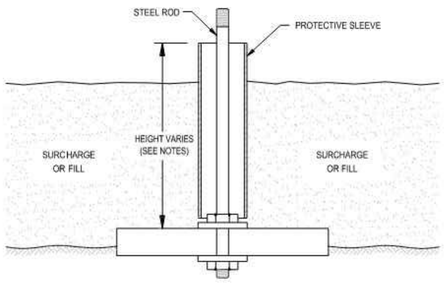

NOT TO SCALE

NOTES:

1. BASE CONSISTS OF 3/4" THICK, 2'x2' PLYWOOD WITH CENTER DRILLED 5/8" DIAMETER HOLE.
2. BEDDING MATERIAL, IF REQUIRED, SHOULD CONSIST OF CLEAN COARSE SAND.
3. MARKER ROD IS 1/2" DIAMETER STEEL ROD THREADED AT BOTH ENDS.
4. MARKER ROD IS ATTACHED TO BASE BY NUT AND WASHER ON EACH SIDE OF BASE.
5. PROTECTIVE SLEEVE SURROUNDING MARKER ROD SHOULD CONSIST OF 2" DIAMETER PLASTIC TUBING. SLEEVE IS NOT ATTACHED TO ROD OR BASE.
6. ADDITIONAL SECTIONS OF STEEL ROD CAN BE CONNECTED WITH THREADED COUPLINGS.
7. ADDITIONAL SECTIONS OF PLASTIC PROTECTIVE SLEEVE CAN BE CONNECTED WITH PRESS-FIT PLASTIC COUPLINGS.
8. STEEL MARKER ROD SHOULD EXTEND AT LEAST 6" ABOVE TOP OF PLASTIC PROTECTIVE SLEEVE.
9. PLASTIC PROTECTIVE SLEEVE SHOULD EXTEND AT LEAST 1" ABOVE TOP OF FILL SURFACE.

Terra Associates, Inc.
Consultants in Geotechnical Engineering Geology and Environmental Earth Sciences

TYPICAL SETTLEMENT MARKER DETAIL
240 - 15TH STREET SE INDUSTRIAL
PUYALLUP, WASHINGTON

Proj. No.T-8661 | Date JAN 2022 | Figure 3

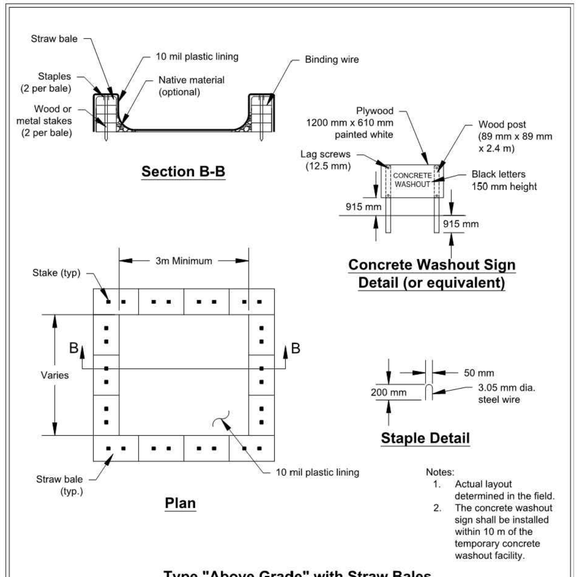

NOT TO SCALE

DEPARTMENT OF ECOLOGY
State of Washington

Figure II-4.1.7b
Concrete Washout Area

Revised June 2015

Please see *http://www.ecy.wa.gov/copyright.html* for copyright notice including permissions, limitation of liability, and disclaimer.

MATERIALS OF CONSTRUCTION

FABRIC:	NEEDLE PUNCHED NON-WOVEN GEOTEXTILE MATERIAL. FABRIC IS IS RESISTANT TO ULTRAVIOLET AND BIOLOGICAL DEGRADATION AND A BROAD RANGE OF CHEMICALS.
APPARENT OPENING SIZE (AOS):	80 US STANDARD SIEVE (0.180 MM)
GRAB TENSILE STRENGTH:	200 LBS
PUNCTURE STRENGTH:	130 LBS
MULLEN BURST:	400 PSI
TRAPEZOIDAL TEAR:	85 LBS
WATER FLOW RATE:	110 GPM/FT2
PERMEABILITY:	0.38 CM/SECOND

DIMENSIONS:

SKIRT:	24"x36"
SOCK FILTER/SEPARATOR:	10" D x 24" L

DISPOSAL REQUIREMENTS:

CONSULT FEDERAL, STATE, AND LOCAL REGULATIONS FOR DISPOSAL OF INSERTS

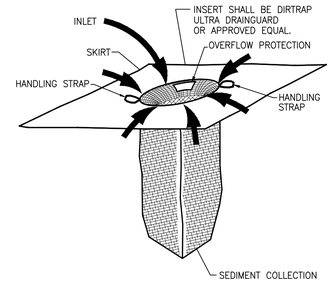

CATCH BASIN INSERT

NOT TO SCALE

SWALE SLOPE	CHECK DAM SPACING
0% - 5%	150'
~~5% - 10%~~	~~100'~~
~~> 10%~~	~~50'~~

THIS PROJECT

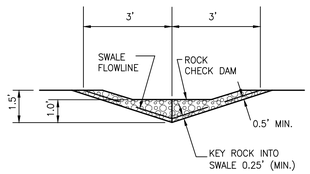

SWALE X-SECTION AT ROCK CHECK DAM

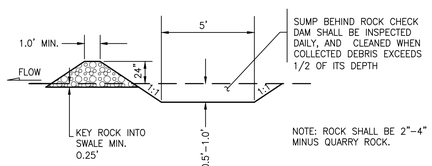

ROCK DAM X-SECTION

ROCK CHECK DAM DETAILS

NOT TO SCALE

ALL RIP RAP PADS SHALL BE THE WIDTH OF THE PIPE PLUS 6' WIDE X 8' LONG X 1' DEEP, USING THE GRADATION SPECIFIED BELOW: (UNLESS OTHERWISE SPECIFIED). EXTEND ROCK TO 1' ABOVE CROWN OF OUTLET PIPE.

RIP RAP TO BE QUARRY SPALLS WITH ROCK GRADATION AS FOLLOWS:
PASSING 8-INCH SQUARE SIEVE: 100%
PASSING 3-INCH SQUARE SIEVE: 40%-60%
PASSING 3/4-INCH SQUARE SIEVE: 0-10%

RIP RAP PROTECTION SPECIFICATIONS

NOT TO SCALE

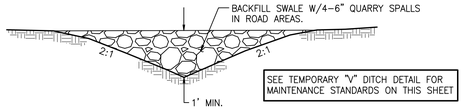

TEMPORARY ROAD X-ING SWALE

NOT TO SCALE

ALL AREAS SUBJECT TO CLEARING AND GRADING THAT HAVE NOT BEEN COVERED BY IMPERVIOUS SURFACE, INCORPORATED INTO A DRAINAGE FACILITY OR ENGINEERED AS STRUCTURAL FILL OR SLOPE SHALL, AT PROJECT COMPLETION, DEMONSTRATE THE FOLLOWING:

1. A TOPSOIL LAYER WITH A MINIMUM ORGANIC MATTER CONTENT OF 10% DRY WEIGHT IN PLANTING BEDS, AND 5% ORGANIC MATTER CONTENT IN TURF AREAS, AND A PH FROM 6.0 TO 8.0 OR MATCHING THE PH OF THE UNDISTURBED SOIL. THE TOPSOIL LAYER SHALL HAVE A MINIMUM DEPTH OF EIGHT INCHES EXCEPT WHERE TREE ROOTS LIMIT THE DEPTH OF INCORPORATION OF AMENDMENTS NEEDED TO MEET THE CRITERIA. SUBSOILS BELOW THE TOPSOIL LAYER SHOULD BE SCARIFIED AT LEAST 4 INCHES WITH SOME INCORPORATION OF THE UPPER MATERIAL TO AVOID STRATIFIED LAYERS, WHERE FEASIBLE.

2. MULCH PLANTING BEDS WITH 2 INCHES OF ORGANIC MATERIAL.

3. USE COMPOST AND OTHER MATERIALS THAT MEET THE FOLLOWING ORGANIC CONTENT REQUIREMENTS:

3.1. THE ORGANIC CONTENT FOR PRE-APPROVED AMENDMENT RATES CAN BE MET ONLY USING COMPOST MEETING THE COMPOST SPECIFICATION FOR BMP T7.30: BIORETENTION, WITH THE EXCEPTION THAT THE COMPOST MAY HAVE UP TO 35% BIOSOLIDS OR MANURE.

THE COMPOST MUST ALSO HAVE AN ORGANIC MATTER CONTENT OF 40% TO 65%, AND A CARBON TO NITROGEN RATIO BELOW 25:1.

THE CARBON TO NITROGEN RATIO MAY BE AS HIGH AS 35:1 FOR PLANTINGS COMPOSED ENTIRELY OF PLANTS NATIVE TO THE PUGET SOUND LOWLANDS REGION.

3.2. THE CALCULATED AMENDMENT RATES MAY BE MET THROUGH USE OF COMPOSTED MATERIAL MEETING (A.) ABOVE; OR OTHER ORGANIC MATERIALS AMENDED TO MEET THE CARBON TO NITROGEN RATIO REQUIREMENTS, AND NOT EXCEEDING THE CONTAMINANT LIMITS IDENTIFIED IN TABLE 220-B, TESTING PARAMETERS, IN WAC 173-350-220.

THE RESULTING SOIL SHOULD BE CONDUCIVE TO THE TYPE OF VEGETATION TO BE ESTABLISHED.

IMPLEMENTATION OPTIONS
THE SOIL QUALITY DESIGN GUIDELINES LISTED ABOVE CAN BE MET BY USING ONE OF THE METHODS LISTED BELOW: LEAVE UNDISTURBED NATIVE VEGETATION AND SOIL, AND PROTECT FROM COMPACTION DURING CONSTRUCTION.

AMEND EXISTING SITE TOPSOIL OR SUBSOIL EITHER AT DEFAULT 'PRE-APPROVED' RATES, OR AT CUSTOM CALCULATED RATES BASED ON TESTS OF THE SOIL AND AMENDMENT.

STOCKPILE EXISTING TOPSOIL DURING GRADING, AND REPLACE IT PRIOR TO PLANTING. STOCKPILED TOPSOIL MUST ALSO BE AMENDED IF NEEDED TO MEET THE ORGANIC MATTER OR DEPTH REQUIREMENTS, EITHER AT A DEFAULT "PRE-APPROVED" RATE OR AT A CUSTOM CALCULATED RATE.

IMPORT TOPSOIL MIX OF SUFFICIENT ORGANIC CONTENT AND DEPTH TO MEET THE REQUIREMENTS.

MORE THAN ONE METHOD MAY BE USED ON DIFFERENT PORTIONS OF THE SAME SITE. SOIL THAT ALREADY MEETS THE DEPTH AND ORGANIC MATTER QUALITY STANDARDS, AND IS NOT COMPACTED, DOES NOT NEED TO BE AMENDED.

BMP T5.13
POST-CONSTRUCTION SOIL QUALITY AND DEPTH

NOT TO SCALE

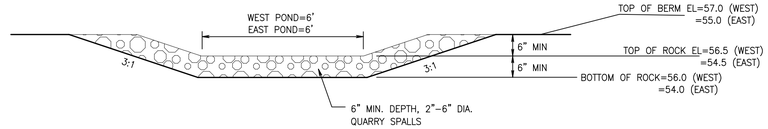

EMERGENCY OVERFLOW SPILLWAY DETAIL

NOT TO SCALE

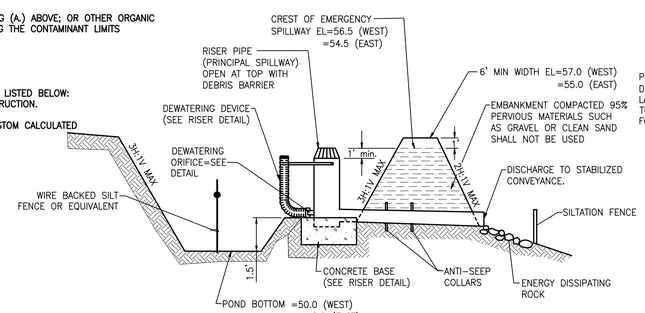

SEDIMENT POND CROSS SECTION

NOT TO SCALE

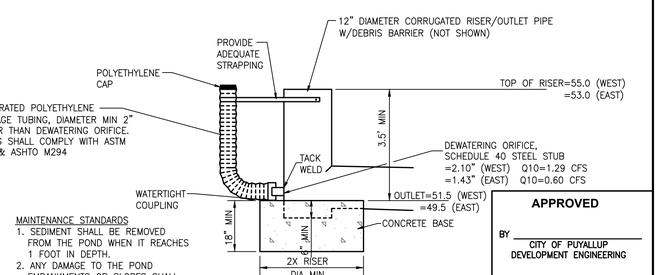

MAINTENANCE STANDARDS
1. SEDIMENT SHALL BE REMOVED FROM THE POND WHEN IT REACHES 1 FOOT IN DEPTH.
2. ANY DAMAGE TO THE POND EMBANKMENTS OR SLOPES SHALL BE REPAIRED.

SEDIMENT POND RISER

NOT TO SCALE

APPROVED

BY _____
CITY OF PUYALLUP
DEVELOPMENT ENGINEERING

DATE _____

NOTE: THIS APPROVAL IS VOID AFTER 180 DAYS FROM APPROVAL DATE.
THE CITY WILL NOT BE RESPONSIBLE FOR ERRORS AND/OR OMISSIONS ON THESE PLANS.
FIELD CONDITIONS MAY DICTATE CHANGES TO THESE PLANS AS DETERMINED BY THE DEVELOPMENT ENGINEERING MANAGER.

No.	Date	By	Ckd.	Appr.	Revision
3	10/03/24	DL	DL	JSG	RESPONSE TO CITY COMMENTS, DATED APRIL 12, 2024
2	03/05/24	DL	DL	JSG	RESPONSE TO CITY COMMENTS, DATED FEBRUARY 06, 2024

Title: CONSTRUCTION DETAILS

FORTRESS - PUYALLUP

For:
CREF3 PUYALLUP OWNER LLC
11611 SAN VICENTE BLVD
10TH FLOOR
LOS ANGELES, CA 90049

JASON GUY HUBBELL
STATE OF WASHINGTON
38950
REGISTERED PROFESSIONAL ENGINEER
10/03/2024

Scale: Horizontal 1 Vertical 1

Designed DL | Drawn RDC | Checked DL | Approved JGH | Date 6/23/23

Barghausen Consulting Engineers, Inc.
18215 72nd Avenue South
Kent, WA 98032
425.251.6222
barghausen.com

Job Number 22085

Sheet C22 of 34

P:\22000s\22085\engineering\22085-ED-CIVIL.dwg 2/13/2024 11:20 AM RCOX

PORTION OF SE QUARTER OF SEC 27, TWN 20 N, RGE. 4 E, W.M.
CITY OF PUYALLUP, PIERCE COUNTY, WASHINGTON

CONSTRUCTION DETAILS

SITE SPECIFIC DATA				
Structure ID				WQ#1
Treatment Flow Rate (cfs)				0.2974
Peak Flow Rate (cfs)				3.0583
Rim Elevation				60.39
Top of Vault Elevation				
Pipe Data	**Pipe Location**	**Pipe Size**	**Pipe Type**	**Invert Elevation**
Inlet	E	18"	CPEP	50.70
Outlet	W	18"	CPEP	50.20
Notes:				

PERFORMANCE SPECIFICATIONS	
Treatment Flow Capacities:*	
NJDEP 80% Removal, 75 micron	0.432 cfs
WA Ecology GULD - Basic, Enhanced & Phosphorus	0.384 cfs
Bypass Capacity	6.5 cfs

*Contact Oldcastle for alternative treatment flow capacities.

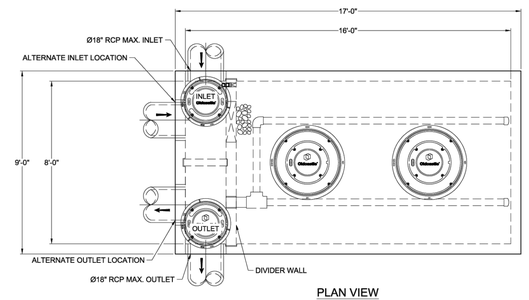

PLAN VIEW

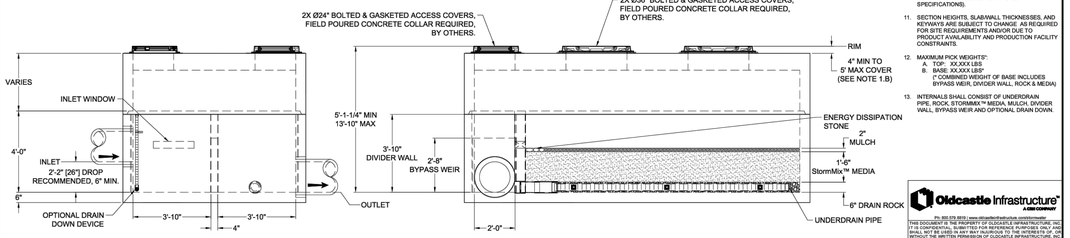

LEFT END VIEW ELEVATION VIEW

NOTES:

1. DESIGN LOADINGS:
   A. AASHTO HS-20-44 (WITH IMPACT)
   B. DESIGN SOIL COVER: 0'-0" MAXIMUM
   C. ASSUMED WATER TABLE: BELOW BASE OF PRECAST (ENGINEER-OF-RECORD TO CONFIRM SITE WATER TABLE ELEVATION)
   D. LATERAL EARTH PRESSURE: 45 PCF (DRAINED)
   E. LATERAL LIVE LOAD SURCHARGE: 80 PSF (APPLIED TO 8'-0" BELOW GRADE)
   F. NO LATERAL SURCHARGE FROM ADJACENT BUILDINGS, WALLS, PIERS, OR FOUNDATIONS.
2. CONCRETE 28-DAY MINIMUM COMPRESSIVE STRENGTH: 5,000 PSI MINIMUM.
3. REINFORCING: REBAR, ASTM A615/A706, GRADE 60
4. CEMENT: ASTM C150
5. REQUIRED ALLOWABLE SOIL BEARING CAPACITY: 2,500 PSF
6. REFERENCE STANDARD:
   A. ASTM C850
   B. ASTM C913
   C. ACI 318-14
7. THIS STRUCTURE IS DESIGNED TO THE PARAMETERS NOTED HEREIN. ENGINEER-OF-RECORD SHALL VERIFY FY THAT NOTED PARAMETERS MEET OR EXCEED PROJECT REQUIREMENTS. IF DESIGN PARAMETERS ARE INCORRECT, REVIEWING ENGINEER/AUTHORITY SHALL NOTIFY OLDCASTLE INFRASTRUCTURE UPON REVIEW.
8. INLET AND OUTLET HOLES WILL BE FACTORY COREDICAST PER PLANS AND CUSTOMER REQUIREMENTS. INLET AND OUTLET LOCATIONS CAN BE MIRRORED.
9. CONTRACTOR RESPONSIBLE TO VERIFY ALL SIZES, LOCATIONS, AND ELEVATIONS OF OPENINGS.
10. CONTRACTOR RESPONSIBLE TO ENSURE ADEQUATE BEARING SURFACE IS PROVIDED (I.E. COMPACTED AND LEVEL PER PROJECT SPECIFICATIONS).
11. SECTION HEIGHTS, SLAB/WALL THICKNESSES, AND KEYWAYS ARE SUBJECT TO CHANGE AS REQUIRED FOR SITE REQUIREMENTS AND/OR DUE TO PRODUCT AVAILABILITY AND PRODUCTION FACILITY CONSTRAINTS.
12. MAXIMUM PICK WEIGHTS*:
    A. TOP: XX,XXX LBS
    B. BASE: XX,XXX LBS*
    (* COMBINED WEIGHT OF BASE INCLUDES BYPASS WEIR, DIVIDER WALL, ROCK & MEDIA)
13. INTERNALS SHALL CONSIST OF UNDERDRAIN PIPE, ROCK, STORMMIX™ MEDIA, MULCH, DIVIDER WALL, BYPASS WEIR AND OPTIONAL DRAIN DOWN.

Oldcastle Infrastructure
A CRH COMPANY
Ph: 800.579.8919 | www.oldcastleinfrastructure.com/stormwater
THIS DOCUMENT, AND THE INFORMATION CONTAINED HEREIN, IS PROPRIETARY TO OLDCASTLE INFRASTRUCTURE, INC. IT IS CONFIDENTIAL, SUBMITTED FOR REFERENCE PURPOSES ONLY AND SHALL NOT BE USED IN ANY WAY DETRIMENTAL TO THE INTERESTS OF, OR IN COMPETITION WITH, OLDCASTLE INFRASTRUCTURE, INC. OR ITS AFFILIATES.
COPYRIGHT © 2021 OLDCASTLE INFRASTRUCTURE, INC. ALL RIGHTS RESERVED.

BioPod™ Biofilter System (STANDARD)
Underground Vault with Internal Bypass

CUSTOMER: -
PROJECT NAME: -

SHEET NAME	REVISION	SHEET
Specifier Drawing BPU-816B	-	1 OF 1
	REV DATE: -	

Stormwater Biofiltration

SITE SPECIFIC DATA				
Structure ID				WQ#2
Treatment Flow Rate (cfs)				0.1837
Peak Flow Rate (cfs)				1.8882
Rim Elevation				55.43
Top of Vault Elevation				
Pipe Data	**Pipe Location**	**Pipe Size**	**Pipe Type**	**Invert Elevation**
Inlet	W	12"	CPEP	49.42
Outlet	E	12"	CPEP	48.92
Notes:				

PERFORMANCE SPECIFICATIONS	
Treatment Flow Capacities:*	
NJDEP 80% Removal, 75 micron	0.240 cfs
WA Ecology GULD - Basic, Enhanced & Phosphorus	0.213 cfs
Bypass Capacity	5.0 cfs

*Contact Oldcastle for alternative treatment flow capacities.

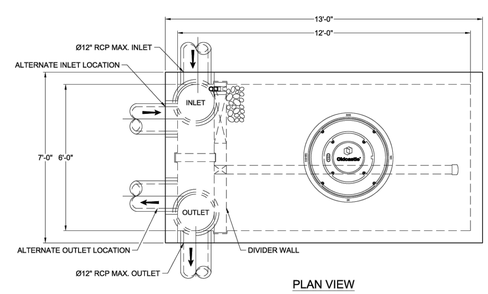

PLAN VIEW

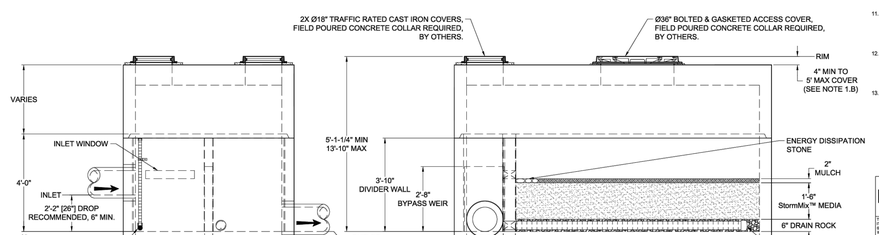

LEFT END VIEW ELEVATION VIEW

NOTES:

1. DESIGN LOADINGS:
   A. AASHTO HS-20-44 (WITH IMPACT)
   B. DESIGN SOIL COVER: 0'-0" MAXIMUM
   C. ASSUMED WATER TABLE: BELOW BASE OF PRECAST (ENGINEER-OF-RECORD TO CONFIRM SITE WATER TABLE ELEVATION)
   D. LATERAL EARTH PRESSURE: 45 PCF (DRAINED)
   E. LATERAL LIVE LOAD SURCHARGE: 80 PSF (APPLIED TO 8'-0" BELOW GRADE)
   F. NO LATERAL SURCHARGE FROM ADJACENT BUILDINGS, WALLS, PIERS, OR FOUNDATIONS.
2. CONCRETE 28-DAY MINIMUM COMPRESSIVE STRENGTH: 5,000 PSI MINIMUM.
3. REINFORCING: REBAR, ASTM A615/A706, GRADE 60
4. CEMENT: ASTM C150
5. REQUIRED ALLOWABLE SOIL BEARING CAPACITY: 2,500 PSF
6. REFERENCE STANDARD:
   A. ASTM C850
   B. ASTM C913
   C. ACI 318-14
7. THIS STRUCTURE IS DESIGNED TO THE PARAMETERS NOTED HEREIN. ENGINEER-OF-RECORD SHALL VERIFY FY THAT NOTED PARAMETERS MEET OR EXCEED PROJECT REQUIREMENTS. IF DESIGN PARAMETERS ARE INCORRECT, REVIEWING ENGINEER/AUTHORITY SHALL NOTIFY OLDCASTLE INFRASTRUCTURE UPON REVIEW.
8. INLET AND OUTLET HOLES WILL BE FACTORY COREDICAST PER PLANS AND CUSTOMER REQUIREMENTS. INLET AND OUTLET LOCATIONS CAN BE MIRRORED.
9. CONTRACTOR RESPONSIBLE TO VERIFY ALL SIZES, LOCATIONS, AND ELEVATIONS OF OPENINGS.
10. CONTRACTOR RESPONSIBLE TO ENSURE ADEQUATE BEARING SURFACE IS PROVIDED (I.E. COMPACTED AND LEVEL PER PROJECT SPECIFICATIONS).
11. SECTION HEIGHTS, SLAB/WALL THICKNESSES, AND KEYWAYS ARE SUBJECT TO CHANGE AS REQUIRED FOR SITE REQUIREMENTS AND/OR DUE TO PRODUCT AVAILABILITY AND PRODUCTION FACILITY CONSTRAINTS.
12. MAXIMUM PICK WEIGHTS*:
    A. TOP: XX,XXX LBS
    B. BASE: XX,XXX LBS*
    (* COMBINED WEIGHT OF BASE INCLUDES BYPASS WEIR, DIVIDER WALL, ROCK & MEDIA)
13. INTERNALS SHALL CONSIST OF UNDERDRAIN PIPE, ROCK, STORMMIX™ MEDIA, MULCH, DIVIDER WALL, BYPASS WEIR AND OPTIONAL DRAIN DOWN.

Oldcastle Infrastructure
A CRH COMPANY
Ph: 800.579.8919 | www.oldcastleinfrastructure.com/stormwater
THIS DOCUMENT, AND THE INFORMATION CONTAINED HEREIN, IS PROPRIETARY TO OLDCASTLE INFRASTRUCTURE, INC. IT IS CONFIDENTIAL, SUBMITTED FOR REFERENCE PURPOSES ONLY AND SHALL NOT BE USED IN ANY WAY DETRIMENTAL TO THE INTERESTS OF, OR IN COMPETITION WITH, OLDCASTLE INFRASTRUCTURE, INC. OR ITS AFFILIATES.
COPYRIGHT © 2021 OLDCASTLE INFRASTRUCTURE, INC. ALL RIGHTS RESERVED.

BioPod™ Biofilter System (STANDARD)
Underground Vault with Internal Bypass

CUSTOMER: -
PROJECT NAME: -

SHEET NAME	REVISION	SHEET
Specifier Drawing BPU-612B	-	1 OF 1
	REV DATE: -	

Stormwater Biofiltration

APPROVED

BY _____
CITY OF PUYALLUP
DEVELOPMENT ENGINEERING

DATE _____

NOTE: THIS APPROVAL IS VOID AFTER 180 DAYS FROM APPROVAL DATE.
THE CITY WILL NOT BE RESPONSIBLE FOR ERRORS AND/OR OMISSIONS ON THESE PLANS.
FIELD CONDITIONS MAY DICTATE CHANGES TO THESE PLANS AS DETERMINED BY THE DEVELOPMENT ENGINEERING MANAGER.

No.	Date	By	Ckd.	Appr.	Revision
3	10/03/24	DL	DL	JSG	RESPONSE TO CITY COMMENTS, DATED APRIL 12, 2024
2	05/06/24	DL	DL	JSG	RESPONSE TO CITY COMMENTS, DATED FEBRUARY 06, 2024

Title: **CONSTRUCTION DETAILS**

FORTRESS - PUYALLUP

For:
CREF3 PUYALLUP OWNER LLC
11611 SAN VICENTE BLVD
10TH FLOOR
LOS ANGELES, CA 90049

JASON GUY HUDDAL — STATE OF WASHINGTON — 38950 — REGISTERED PROFESSIONAL ENGINEER
10/03/2024

Scale: Horizontal NA Vertical N/A

Designed DL Drawn RDC Checked DL Approved JGH Date 6/23/23

Barghausen Consulting Engineers, Inc.
18215 72nd Avenue South
Kent, WA 98032
425.251.6222
barghausen.com

Job Number **22085**

Sheet **C23** of **34**

P:\22000s\22085\engineering\22085-D.dwg 4/29/2024 12:37 PM RCOX

PORTION OF SE QUARTER OF SEC 27, TWN 20 N, RGE. 4 E, W.M.
CITY OF PUYALLUP, PIERCE COUNTY, WASHINGTON

CONSTRUCTION DETAILS

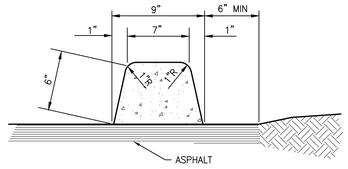

PRIVATE ON-SITE EXTRUDED CONCRETE CURB DETAIL

NOT TO SCALE

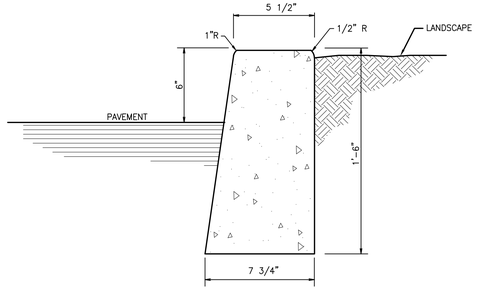

PRIVATE ON-SITE VERTICAL CURB DETAIL

NOT TO SCALE

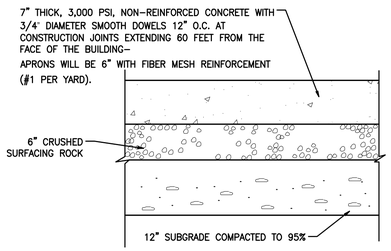

HEAVY DUTY CONCRETE PAVEMENT SECTION

NOT TO SCALE (PER OWNER SPECIFICATIONS)

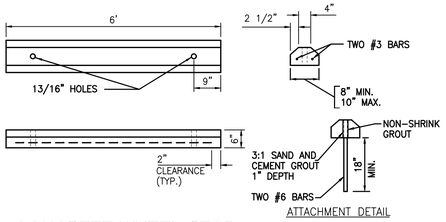

CONCRETE WHEEL STOP

NOT TO SCALE

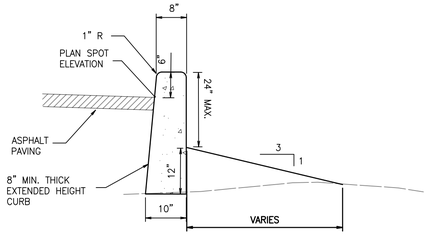

PRIVATE ON-SITE EXTENDED HEIGHT CURB DETAIL

NOT TO SCALE

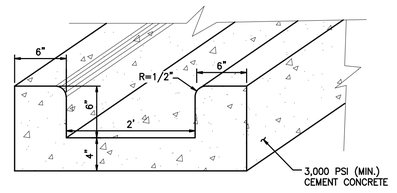

CONCRETE FLUME DETAIL

NOT TO SCALE

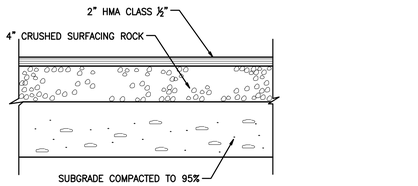

LIGHT DUTY ASPHALT PAVEMENT SECTION

NOT TO SCALE PER GEOTECHNICAL RECOMMENDATIONS

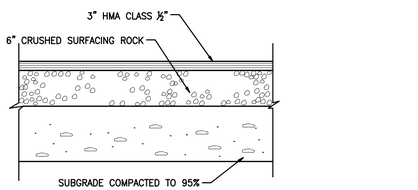

HEAVY DUTY ASPHALT PAVEMENT SECTION

NOT TO SCALE PER GEOTECHNICAL RECOMMENDATIONS

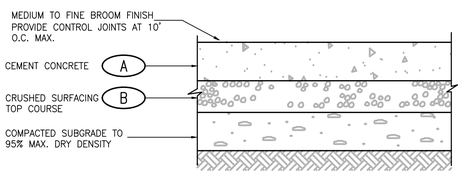

SLAB LOCATION	(A)	(B)
SIDEWALKS (NON-VEHICULAR)	4"	4" COMPACTED DEPTH
FLUSH CROSSWALKS IN DRIVE AISLE	6"	6" COMPACTED DEPTH

EXTERIOR CONCRETE SLAB DETAIL

NOT TO SCALE

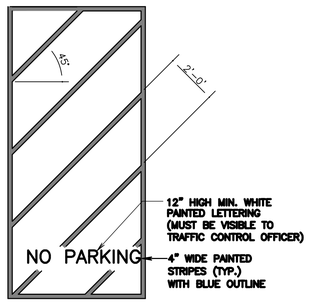

NOTE:
1. TYPE B - E-FORMED FUSED THERMOPLASTIC AT 120 MIL THICKNESS.

PAVEMENT MARKINGS

NOT TO SCALE

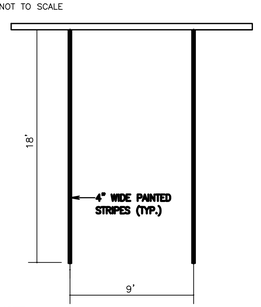

NOTE:
1. 2 COATS ALKYD TRAFFIC PAINT MARKING PAINT.
2. COLOR: WHITE FOR PARKING STRIPES.
3. TYPE B - E-FORMED FUSED THERMOPLASTIC AT 120 MIL THICKNESS.

PARKING STALL PAVEMENT MARKINGS

NOT TO SCALE

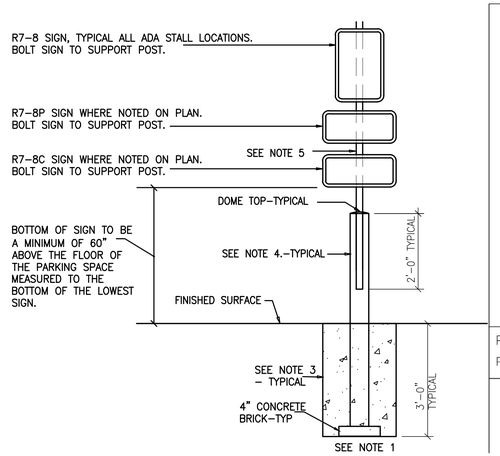

ACCESSIBLE PARKING SIGN/POST

N.T.S.

NOTES:
1. INSTALL ALL SIGNS WHERE INDICATED ON SITE PLAN.
2. ADJUST MOUNTING HEIGHTS TO MEET LOCAL CODES WHERE APPLICABLE.
3. SET ALL POSTS IN 16" DIAMETER x 36" DEEP CONCRETE FOUNDATION.
4. 4" x 6'-0" CONCRETE FILLED STEEL POST CENTERED IN FOUNDATION, PAINTED YELLOW, SEE SPECS.
5. 2 1/4" WIDE x 6'-0" LONG U-CHANNEL POST WITH BAKED ON GREEN ENAMEL FINISH.

PAVEMENT MARKING STENCIL

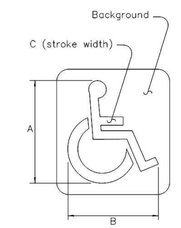

Pavement Marking Background: Optional: Blue, Retro-reflective
Pavement Marking Stencil: White, Retro-reflective

LEGEND	DIMENSIONS (INCHES)						
	A	B	C	D	E	F	G
MINIMUM	28	24	3				

PAVEMENT SYMBOL
N.T.S.

SIGN DESIGN
SIGN NO. R7-8P

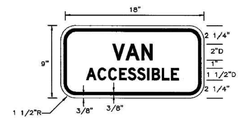

Sign Background: White, Retroreflective sheeting
Sign Legend: Green, Retroreflective sheeting

Refer to Standard Highway Signs book for details.

The VAN-ACCESSIBLE sign shall only be used with sign R7-8 to designate the parking spaces that have an access aisle 8 ft or wider

SIGN DETAIL
N.T.S.

SIGN DESIGN
SIGN NO. R7-8

Sign Background: White, Retro-reflective sheeting
Sign Legend: Green, Retro-reflective
Symbol: White on Blue Background, Retro-reflective
Sign: Standard Federal R7-8 without arrow from the Standards Highway and Markings Handbook

SIGN DETAIL
N.T.S.

(5) ACCESSIBLE PARKING DETAILS

NOT TO SCALE

APPROVED

BY _____
CITY OF PUYALLUP
DEVELOPMENT ENGINEERING

DATE _____

NOTE: THIS APPROVAL IS VOID AFTER 180 DAYS FROM APPROVAL DATE.
THE CITY WILL NOT BE RESPONSIBLE FOR ERRORS AND/OR OMISSIONS ON THESE PLANS.
FIELD CONDITIONS MAY DICTATE CHANGES TO THESE PLANS AS DETERMINED BY THE DEVELOPMENT ENGINEERING MANAGER.

No.	Date	By	Ckd.	Appr.	Revision
3	10/03/24	DL	DL	JSG	RESPONSE TO CITY COMMENTS, DATED APRIL 12, 2024
2	03/05/24	DL	DL	JSG	RESPONSE TO CITY COMMENTS, DATED FEBRUARY 06, 2024

Title: CONSTRUCTION DETAILS

FORTRESS - PUYALLUP

For: CREF3 PUYALLUP OWNER LLC
11611 SAN VICENTE BLVD
10TH FLOOR
LOS ANGELES, CA 90049

JASON GUY HUBERDEAU — STATE OF WASHINGTON — 38950 — REGISTERED PROFESSIONAL ENGINEER
10/03/2024

Scale: Horizontal NA Vertical N/A

Designed DL Drawn RDC Checked DL Approved JGH Date 6/23/23

Barghausen Consulting Engineers, Inc.
18215 72nd Avenue South
Kent, WA 98032
425.251.6222
barghausen.com

Job Number 22085

Sheet C24 of 34

P:\22000s\22085\engineering\22085-D.dwg 4/29/2024 12:37 PM RCOX

PORTION OF SE QUARTER OF SEC 27, TWN 20 N, RGE. 4 E, W.M.
CITY OF PUYALLUP, PIERCE COUNTY, WASHINGTON

CONSTRUCTION DETAILS

CURB AND GUTTER

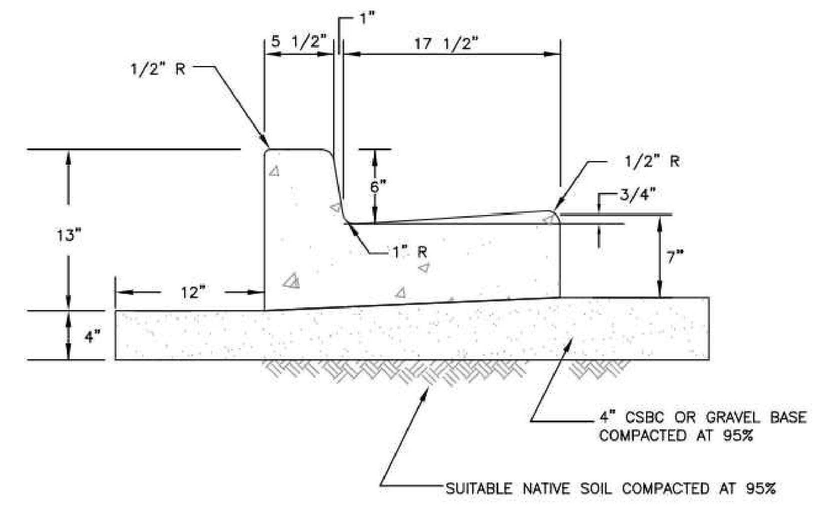

NOTES:

1. CONTRACTION JOINTS SHALL BE 3/8" x 2 1/4" ASPHALT SATURATED FELT PLACED IN ALL EXPOSED SURFACES OF CURB AND GUTTER AND SPACED AT 15' MAX. 10' MIN. O.C.
2. THRU JOINTS SHALL BE 3/8" ASPHALT SATURATED FELT PLACED AT POINTS OF TANGENCY ON CURVES, AT CATCH BASINS, AND AT EDGES OF ALLEY AND DRIVEWAYS. THE MAXIMUM DISTANCE BETWEEN THRU JOINTS SHALL BE 100'.
3. CONCRETE SHALL BE CLASS 3000 COMMERCIAL CONCRETE, 5.5 SACK MINIMUM, AASHTO GRADING 467 COARSE AGGREGATE, NO FLY ASH.
4. FORMS SHALL BE STEEL UNLESS PRIOR APPROVAL IS GIVEN BY THE CITY ENGINEER. FORMS SHALL BE SET TRUE TO LINE AND GRADE AND SECURELY STAKED PRIOR TO CONCRETE PLACEMENT. FULL DEPTH DIVISION PLATES ARE ONLY TO BE USED WHERE THRU JOINTS ARE TO BE PLACED.
5. THE 1" RADIUS ON THE UPPER FACE OF THE CURB MAY BE FORMED BY AN EDGER TOOL OR BUILT INTO THE FACE FORM. THE 1" RADIUS AT THE BOTTOM FACE OF THE CURB SHALL BE FORMED BY THE FACE FORM.

CITY OF PUYALLUP
DEVELOPMENT ENGINEERING and PUBLIC WORKS DEPARTMENTS

CURB AND GUTTER

DRAWN BY	CHECKED BY	APPROVED BY	REVISED BY	CITY STANDARD
JIM ERWIN-SVOBODA	LINDA LIAN	COLLEEN HARRIS	Linda Lian	01.02.09
FILE NAME: F:\DWG\COMMON\STDS\CITY\2009\01_STR\01.02\01.02.09	DATE APPROVED: 07/01/2009	DATE REVISED: 05/23/12	SCALE: 1:1	

PIPE TRENCHING BEDDING AND BACKFILL

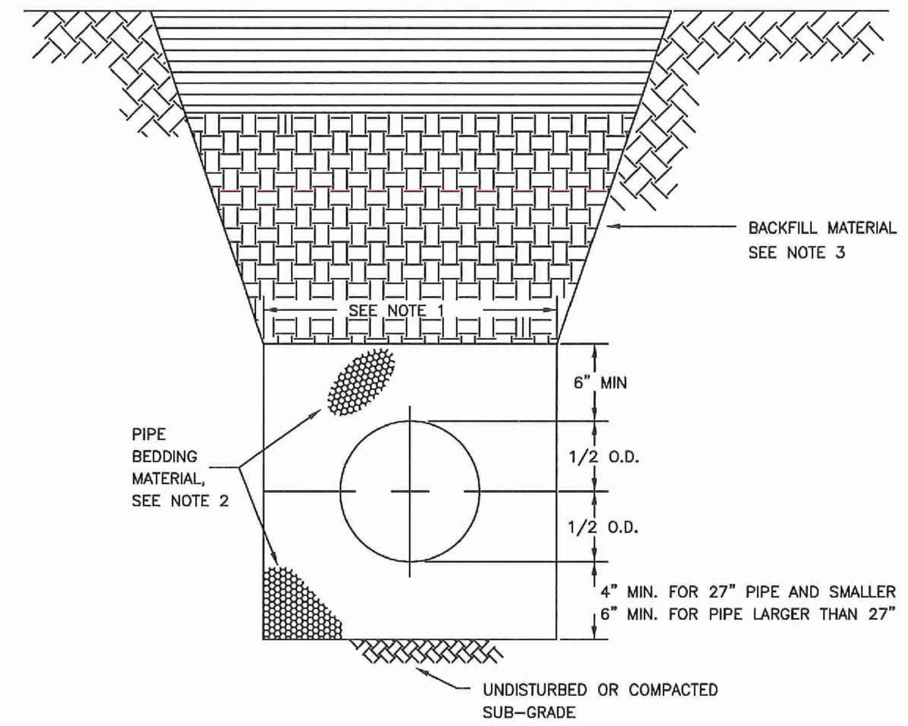

1. TRENCHING SHALL MEET THE REQUIREMENTS OF SECTION 7-08.3(1)A AND 2-06.3(1) OF THE WSDOT SPECIFICATIONS.
2. BEDDING MATERIAL SHALL CONFORM TO 9-03.12(3) GRAVEL BACKFILL FOR PIPE ZONE BEDDING.
3. GRAVEL BACKFILL SHALL CONFORM TO 9-03.12(1)A GRAVEL BACKFILL FOR FOUNDATIONS, CLASS A.

DATE SEALED: 2/17/17

CITY OF PUYALLUP
OFFICE of THE CITY ENGINEER

PIPE TRENCHING BEDDING AND BACKFILL

DRAWN BY	CHECKED BY	APPROVED BY	REVISED BY	DATE REVISED	CITY STANDARD
JIM ERWIN-SVOBODA	TED HILL	MARK PALMER	V STOCKMAN	03/21/11, 02/15/17, XX/XX/XX, XX/XX/XX	06.01.01
FILE NAME: F:\DWG\COMMON\STDS\CITYSTDS\06_MISC\06.01\06.01.01	DATE APPROVED: 07/01/2009	SCALE: 1:1			

MANHOLE STEP AND HANDHOLD

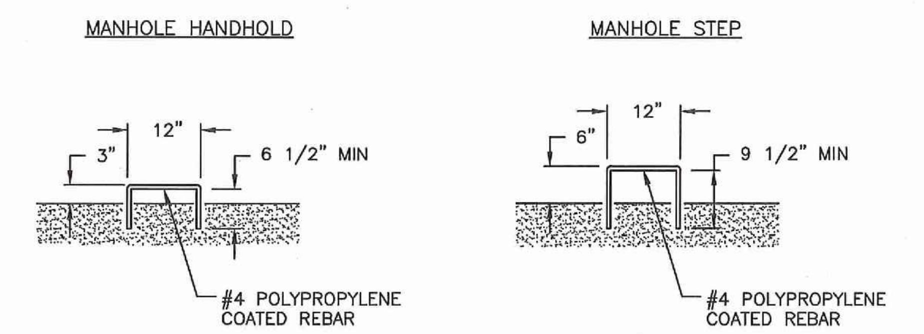

NOTES

1. MANHOLE STEPS AND HANDHOLDS SHALL BE POLYPROPYLENE COATED GRADE 60 REBAR CONFORMING TO ASTM C-478, D-4101, A-615 AND AASHTO M-199.
2. PREFABRICATED LADDERS SHALL BE MADE OF REBAR AND ENCASED IN POLYPROPYLENE AFTER FABRICATION.
3. STEPS MAY BE INSTALLED:
   CAST IN PLACE, OR
   DRIVEN INTO PREFORMED HOLES WITH THE CONCRETE CURED TO 3,000 PSI MINIMUM, OR
   BY DRILLING TWO ONE INCH DIAMETER HOLES, 3-3/4' DEEP, 13" O.C. APPLY NON-SHRINK GROUT AROUND BARBED ENDS AND DRIVE TO FULL INSERTION.
4. PENETRATION OF THE OUTER WALL OF A STRUCTURE WITH A LEG OF A STEP OR LADDER SHALL NOT OCCUR. STEPS AND LADDER RUNGS SHALL BE SPACED AT 12 INCHES AND SHALL BE VERTICALLY ALIGNED.
5. STEPS, HANDHOLDS, LADDER RUNGS AND FASTENINGS SHALL BE DESIGNED FOR A MINIMUM LIVE LOAD OF 300 LBS AND A PULL OUT FORCE OF 1,000 LBS.
6. STEPS, HANDHOLDS, AND LADDER PARTS SHALL BE FREE OF SPLINTERS, SHARP EDGES, BURRS OR PROJECTIONS WHICH MAY CAUSE HAZARDS.
7. REQUESTS TO USE STEPS, HANDHOLDS AND LADDERS MADE FROM NON-CORROSIVE MATERIALS SUCH AS STAINLESS STEEL AND PLASTIC MAY BE ACCEPTED AFTER REVIEW AND APPROVAL BY THE CITY. GALVANIZED STEEL WILL NOT BE PERMITTED IN SANITARY SEWER AND STORM SEWER MANHOLES AND STRUCTURES.

DATE SEALED: 3/6/17

CITY OF PUYALLUP
OFFICE of THE CITY ENGINEER

MANHOLE STEP AND HANDHOLD

DRAWN BY	CHECKED BY	APPROVED BY	REVISED BY	DATE REVISED	CITY STANDARD
JIM ERWIN-SVOBODA	TED HILL	MARK PALMER	V STOCKMAN	08/15/12, 02/24/17, XX/XX/XX, XX/XX/XX	06.01.03
FILE NAME: F:\DWG\COMMON\STDS\CITYSTDS\06_MISC\06.01\06.01.03	DATE APPROVED: 07/01/2009	SCALE: VARIES			

MANHOLE LADDER

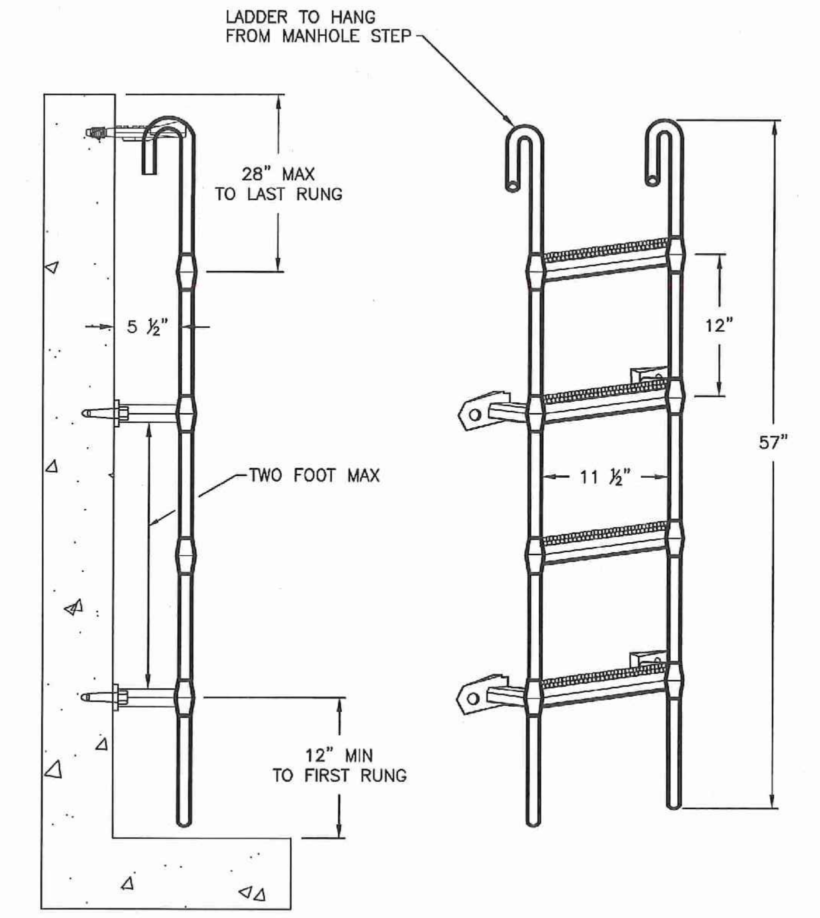

PREFABRICATED POLY LADDER

VAULT LADDER SHALL BE A LANE POLY LADDER OR AN APPROVED EQUAL MEETING THE REQUIREMENTS OF ASTM C-478, A-615, D4101 AND AASHTO M-199

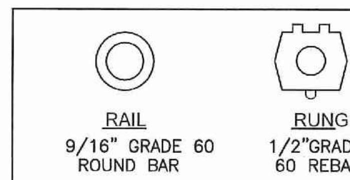

DATE SEALED: 3/6/17

CITY OF PUYALLUP
OFFICE of THE CITY ENGINEER

MANHOLE LADDER

DRAWN BY	CHECKED BY	APPROVED BY	REVISED BY	DATE REVISED	CITY STANDARD
JIM ERWIN-SVOBODA	TED HILL	MARK PALMER	V STOCKMAN	11/15/12, 02/24/17, XX/XX/XX, XX/XX/XX	06.01.04
FILE NAME: F:\DWG\COMMON\STDS\CITYSTDS\06_MISC\06.01\06.01.04	DATE APPROVED: 07/01/2009	SCALE: 1:1			

HORIZONTAL THRUST BLOCKING

NOTE: DRAWINGS DEPICT BLOCK LOCATION, NOT SIZE.
FOR SIZE SEE NOTES 3, 4, 5, AND CITY STD. 03.02.01-3

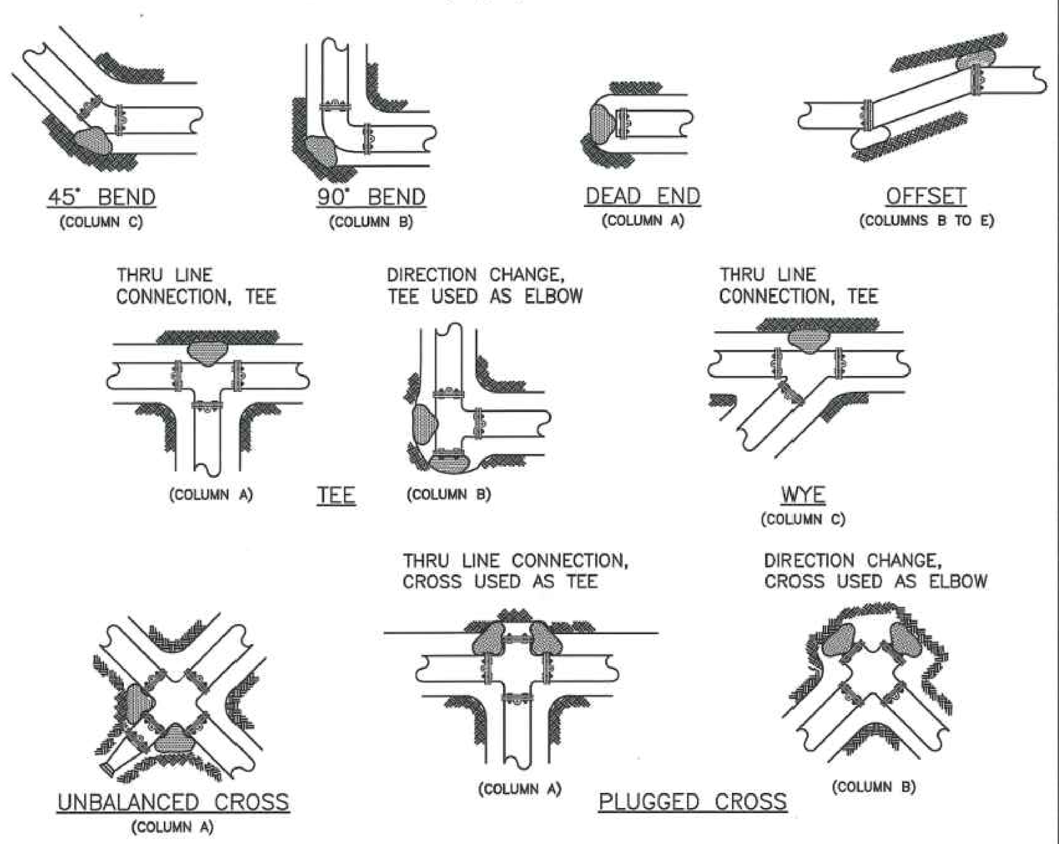

NOTES:

1. THE FOLLOWING PRECAUTIONS MUST BE OBSERVED WHEN CONSTRUCTING THRUST BLOCKS:
   A. BLOCKS MUST BE POURED OR PLACED AGAINST UNDISTURBED SOIL.
   B. THE PIPE FITTING(S) AND BOLTS MUST BE ACCESSIBLE. WRAP IN PLASTIC BEFORE POURING CONCRETE BLOCKING.
   C. CONCRETE SHOULD BE CURED FOR AT LEAST 5 DAYS AND SHOULD HAVE A MINIMUM COMPRESSION STRENGTH OF 3,000 PSI AT 28 DAYS.
   D. RESTRAINED JOINTS SHALL BE INSTALLED, IN ADDITION TO CONCRETE THRUST BLOCKING.
   E. BLOCKS MUST BE POSITIONED TO COUNTERACT THE DIRECTION OF THE RESULTANT THRUST FORCE.
2. ALL PIPE SHALL BE PROPERLY BEDDED, SEE CITY OF PUYALLUP STANDARD BEDDING DETAIL NO. 06.01.01.
3. CONTRACTOR TO PROVIDE BLOCKING ADEQUATE TO WITHSTAND FULL TEST PRESSURE.
4. DIVIDE THRUST BY SAFE BEARING LOAD TO DETERMINE REQUIRED AREA (IN SQUARE FEET) OF CONCRETE TO DISTRIBUTE LOAD.
5. BEARING SURFACE AREAS TO BE ADJUSTED BY THE ENGINEER FOR OTHER PRESSURE AND/OR SOIL CONDITIONS.

CITY OF PUYALLUP
OFFICE of THE CITY ENGINEER

APPROVED FOR PUBLICATION
DATE SEALED: 2/5/2018

HORIZONTAL THRUST BLOCKING

(NOT TO SCALE)

CITY STANDARD 03.02.01-1

FILE NAME: F:\DRAWINGS\COMMON\STANDARDS\CITY STANDARDS\2018\02 - PART 2 - STANDARD DETAILS\CAD\300\03.02

THRUST BLOCKING TABLE

TABLE 2: THRUST AT FITTINGS AT 200 PSI

SIZE	TEST PRESSURE (PSI)	A: TEE AND DEAD ENDS	B: 90° BEND	C: 45° BEND	D: 22.5° BEND	E: 11.25° BEND
		THRUST FITTINGS AT 200 PSI				
4"	200	3,140	4,440	2,405	1,225	615
6"	200	7,070	9,995	5,410	2,760	1,385
8"	200	12,565	17,770	9,620	4,905	2,465
10"	200	19,635	27,770	15,030	7,660	3,850
12"	200	28,275	39,985	21,640	11,030	5,545
14"	200	38,485	54,425	29,455	15,015	7,545
16"	200	50,265	71,085	38,470	19,615	9,855

TABLE 3: BEARING VALUE OF SOIL

SOIL TYPE	SAFE BEARING LOAD LBS/SF
MUCK, PEAT, ETC.	0
SOFT CLAY/ALLUVIAL SOIL	1,000
SAND	2,000
SAND AND GRAVEL	3,000
SAND AND GRAVEL CEMENTED WITH CLAY	4,000
HARD SHALE	10,000

SEE CITY STANDARDS 03.02.01-1 AND 03.02.01-2 FOR ADDITIONAL INFORMATION.

NOTES:

① TO DETERMINE THRUST AT PRESSURES OTHER THAN PSI SHOWN, MULTIPLY THE THRUST OBTAINED IN TABLE 2 BY THE RATIO OF THE PRESSURE TO 200 PSI.

EXAMPLE:
THE THRUST ON A 12 INCH, 90° BEND AT 300 PSI.

$39{,}985 \times \frac{300\ PSI}{200\ PSI} = 59{,}978$ LBS

② TO DETERMINE THE BEARING AREA OF THE THRUST BLOCK IN SQUARE FEET (SF):

SEE TABLE 3, BEARING VALUE OF SOIL

EXAMPLE:
FOR SAND AND GRAVEL BEARING VALUE FROM TABLE 3 IS 3,000 LBS/SF

59,978 LBS ÷ 3000 LB/SF = 20 SF OF AREA

③ CONTRACTOR TO PROVIDE BLOCKING ADEQUATE TO WITHSTAND FULL TEST PRESSURE

④ AREAS SHALL BE ADJUSTED FOR OTHER PRESSURE CONDITIONS.

⑤ NO WATER MAIN SHALL DEAD END AGAINST A MAIN LINE VALVE. DEAD END WATER MAINS SHALL BE BLOCKED AGAINST A RESTRAINED MECHANICAL JOINT (M.J.) PLUG OR CAP.

CITY OF PUYALLUP
OFFICE of THE CITY ENGINEER

APPROVED FOR PUBLICATION
DATE SEALED: 2/5/2018

THRUST BLOCKING TABLE

(NOT TO SCALE)

CITY STANDARD 03.02.01-3

FILE NAME: F:\DRAWINGS\COMMON\STANDARDS\CITY STANDARDS\2018\02 - PART 2 - STANDARD DETAILS\CAD\300\03.02

SANITARY SEWER MANHOLE

NOTES:

1. NEAT LINE CUTS SHALL BE SEALED AT TOP WITH A HOT PAVING GRADE AND FACE OF CUT TACKED.
2. TOP OF SHELF, SLOPE 1/2" PER FOOT, CONSTRUCT IN FIELD CHANNEL AND SHELF TO THE CROWN OF PIPE.

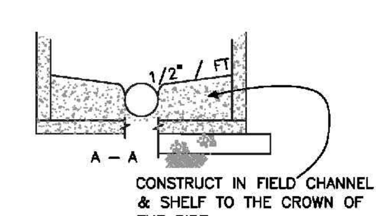

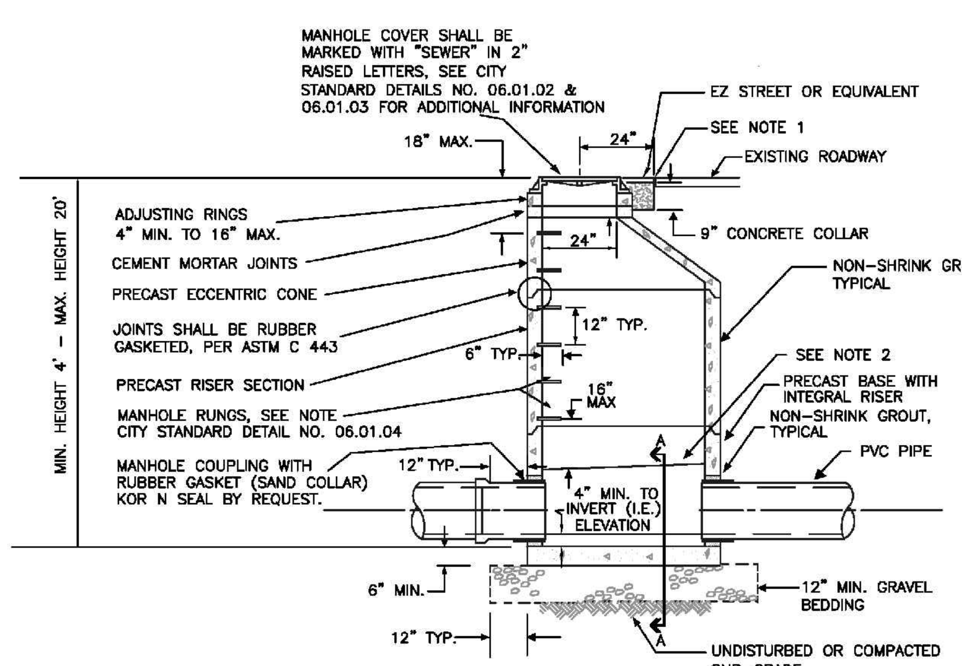

CITY OF PUYALLUP
DEVELOPMENT ENGINEERING and PUBLIC WORKS DEPARTMENTS

SANITARY SEWER MANHOLE

DRAWN BY	CHECKED BY	APPROVED BY	REVISED BY	CITY STANDARD
JIM ERWIN-SVOBODA	LINDA LIAN	COLLEEN HARRIS	LINDA LIAN	04.01.01
FILE NAME: F:\DWG\COMMON\STDS\CITY\2009\04_SS\04.01\04.01.01	DATE APPROVED: 07/01/2009	DATE REVISED: 05/23/12	SCALE: 1"=4'	

MANHOLE FRAME AND COVER

EAST JORDAN IRON WORKS 24" "ERGO" FRAME & COVER (PRE-APPROVED PRODUCT)

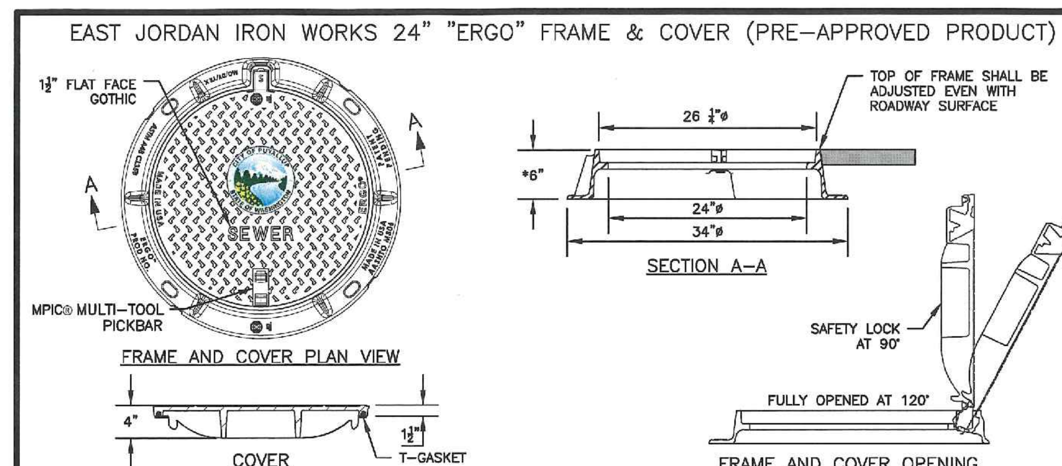

OLYMPIC FOUNDRY MH41 RING & HINGE PUYALLUP COVER (PRE-APPROVED PRODUCT)

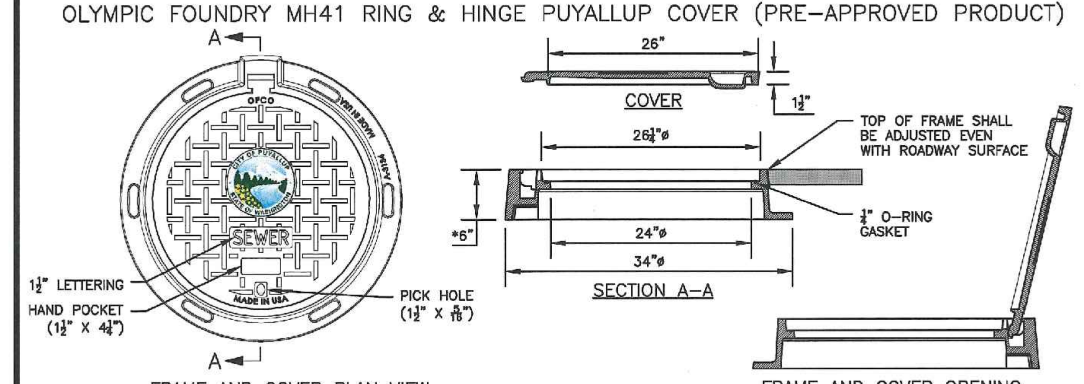

NOTES:

1. EAST JORDAN IRON WORKS 24" "ERGO" AND OLYMPIC FOUNDRY MH41 RING & HINGE PUYALLUP COVER ARE PRE-APPROVED PRODUCTS AND SHALL BE USED FOR PUBLICLY-OWNED INFRASTRUCTURE. ALL OTHERS REQUIRE WRITTEN APPROVAL OF THE ENGINEER PRIOR TO INSTALLATION.
2. MANHOLE FRAME AND COVERS SHOULD NOT BE LOCATED IN PEDESTRIAN PATHWAYS (E.G. SIDEWALKS, CROSSWALKS, ETC.). WHERE EXISTING OR PROPOSED CONDITIONS REQUIRE A MANHOLE FRAME AND COVER TO BE INSTALLED WITHIN A PEDESTRIAN PATHWAY, THE MANHOLE FRAME AND COVER SHALL BE ADA COMPLIANT.
3. NON-ROCKING FIT FOR MANHOLE COVERS.
4. CASTING TO BE SHOT BLASTED AND FREE FROM SURFACE SAND AND SCALE.
5. CASTING TO BE SMOOTH, TRUE TO PATTERN, FREE FROM BLOWHOLES, POROSITY HARD SPOTS, SHRINK HOLES, WARP, OR ANY OTHER DEFECTS WHICH COULD IMPAIR SERVICEABILITY.
6. CASTINGS SHALL BE UNCOATED.
7. FOR STORM APPLICATIONS CAST LETTERS SHALL READ "STORM".
8. INSTALL FRAME AND COVER IN ROADWAY WITH HINGED SIDE OF ASSEMBLY POINTED TOWARD ONCOMING TRAFFIC.
9. THE CITY SHALL HAVE THE RIGHT TO REQUIRE INSPECTION AND APPROVAL OF ALL CASTINGS PRIOR TO PAINTING.
10. REPAIR OR DEFECTS BY WELDING, OR BY THE USE OF "SMOOTH-ON" OR SIMILAR MATERIAL WILL NOT BE PERMITTED.
11. MANHOLE RING AND COVER SHALL BE FREE OF POROSITY, SHRINK CAVITIES, COLD SHUTS OR CRACKS OR ANY SURFACE DEFECTS WHICH WOULD IMPAIR SERVICEABILITY.

* FRAME HEIGHT MAY BE 4" FOR OVERLAYS AND PAVEMENT REHABILITATION PROJECTS, WITH WRITTEN APPROVAL BY THE CITY ENGINEER.

CITY OF PUYALLUP
OFFICE of THE CITY ENGINEER

APPROVED FOR PUBLICATION
DATE SEALED: 2/5/2018

MANHOLE FRAME AND COVER

(NOT TO SCALE)

CITY STANDARD 06.01.02

FILE NAME: F:\DRAWINGS\COMMON\STANDARDS\CITY STANDARDS\2018\02 - PART 2 - STANDARD DETAILS\CAD\600\06.01

APPROVED

BY ____________________
CITY OF PUYALLUP DEVELOPMENT ENGINEERING

DATE ____________________

NOTE: THIS APPROVAL IS VOID AFTER 180 DAYS FROM APPROVAL DATE.
THE CITY WILL NOT BE RESPONSIBLE FOR ERRORS AND/OR OMISSIONS ON THESE PLANS.
FIELD CONDITIONS MAY DICTATE CHANGES TO THESE PLANS AS DETERMINED BY THE DEVELOPMENT ENGINEERING MANAGER.

No.	Date	By	Ckd.	Appr.	Revision
3	10/03/24	DL	DL	JSG	RESPONSE TO CITY COMMENTS, DATED APRIL 12, 2024
2	03/05/24	DL	DL	JSG	RESPONSE TO CITY COMMENTS, DATED FEBRUARY 06, 2024

Title: **CONSTRUCTION DETAILS**
FORTRESS - PUYALLUP

For: **CREF3 PUYALLUP OWNER LLC**
11611 SAN VICENTE BLVD
10TH FLOOR
LOS ANGELES, CA 90049

JASON GUY HUBBELL, STATE OF WASHINGTON, 38950, REGISTERED PROFESSIONAL ENGINEER
10/03/2024

Scale: Horizontal NA; Vertical N/A

Designed DL
Drawn RDC
Checked DL
Approved JGH
Date 6/23/23

Barghausen Consulting Engineers, Inc.
18215 72nd Avenue South
Kent, WA 98032
425.251.6222
barghausen.com

Job Number 22085

Sheet C25 of 34

P:\22000s\22085\engineering\22085-D.dwg 4/29/2024 12:37 PM RCOX

PORTION OF SE QUARTER OF SEC 27, TWN 20 N, RGE. 4 E, W.M.
CITY OF PUYALLUP, PIERCE COUNTY, WASHINGTON

CONSTRUCTION DETAILS

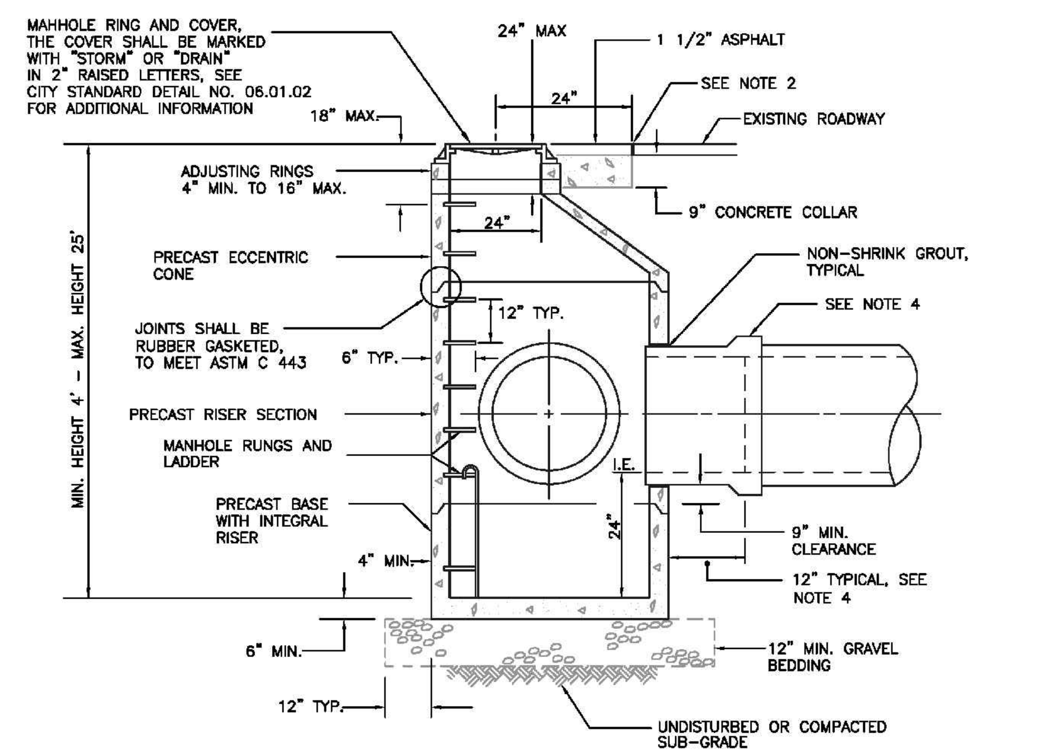

NOTES:

1. THE CONSTRUCTION AND INSTALLATION OF STORM SEWER MANHOLES SHALL CONFORM TO THE REQUIREMENTS OF WSDOT SPEC. SECTION 7-05 AND ASTM C 478.
2. THE FACE OF NEAT LINE CUTS IN EXISTING ASPHALT PAVEMENT SHALL BE TACK COATED AND THE TOP OF THE JOINT SHALL BE SEALED WITH A HOT PAVING GRADE ASPHALT.
3. PRECAST RISER SECTION OR PRECAST BASE WITH INTEGRAL RISER SHALL BE FURNISHED WITH CUTOUTS OR KNOCKOUTS WITH A MINIMUM WALL THICKNESS OF 2". THE SIZE OF THE KNOCKOUT SHALL BE EQUAL TO THE PIPE OUTER DIAMETER PLUS THE MANHOLE WALL THICKNESS. THE MAXIMUM HOLE SIZE IS 36" FOR A 48" MANHOLE, 42" FOR A 54" MANHOLE, 60" FOR A 72" MANHOLE, AND 84" FOR A 96" MANHOLE.
4. A FLEXIBLE GASKETED JOINT SHALL BE INSTALLED WITHIN 12" OF EACH CONNECTION TO A MANHOLE. THE CONNECTION OF CONCRETE OR DUCTILE IRON PIPE TO A MANHOLE SHALL BE CEMENT MORTARED. DUCTILE IRON PIPE SHALL BE SEALED WITH MASTIC AT THE CONNECTION POINT PRIOR TO BEING MORTARED. THE CONNECTION OF PVC PIPE TO A MANHOLE SHALL UTILIZE A MANHOLE COUPLING (SAND COLLAR) WITH A RUBBER GASKET.
5. THE MANHOLE COVER SHALL BE MARKED WITH "STORM" OR "DRAIN" IN 2 INCH RAISED LETTERS. MANHOLE RING AND COVER SHALL CONFORM TO CITY STANDARD DETAIL NO. 06.01.03
6. MANHOLE STEP AND LADDER SHALL CONFORM TO CITY STANDARD DETAILS NO. 06.01.04 AND 06.01.05

CITY OF PUYALLUP
DEVELOPMENT ENGINEERING and PUBLIC WORKS DEPARTMENTS

STORM SEWER MANHOLE

DRAWN BY	CHECKED BY	APPROVED BY	REVISED BY	CITY STANDARD
JIM ERWIN-SVOBODA	LINDA LIAN	COLLEEN HARRIS	Linda Lian	02.01.01
FILE NAME F:\DWG\COMMON\STDS\CITY\2009\02_SD\02.01.01		DATE APPROVED 09/01/1992	DATE REVISED 09/21/2012	SCALE NTS

NOTES:

1. MAXIMUM LENGTH OF PIPE BETWEEN CATCH BASINS SHALL BE 400'.
2. TYPE I CATCH BASIN IS USED FOR DEPTHS LESS THAN 5'-0" FROM TOP OF GRATE TO I.E.(PIPE INVERT).
3. PRECAST BASE SECTION SHALL BE FURNISHED WITH CUTOUTS OR KNOCKOUTS. KNOCKOUTS SHALL HAVE A WALL THICKNESS OF 2" MIN. KNOCKOUTS SHALL BE ON 4 SIDES WITH A MAXIMUM DIAMETER OF 20" TO PROVIDE FOR A MINIMUM SUMP DEPTH OF 18".
4. THE TAPER ON THE SIDES OF THE PRECAST BASE SECTION SHALL NOT EXCEEED 1/2" PER FOOT.
5. CATCH BASIN SHALL BE CONSTRUCTED IN ACCORDANCE WITH ASTM C 478 (AASHTO M 199) AND ASTM C 890 UNLESS OTHERWISE NOTED.
6. CATCH BASIN MARKER WILL BE AFFIXED WITH MANUFACTURER'S EPOXY IN DRY WEATHER, 40 DEGREES OR WARMER. IF CURB EXISTS MARKER IS PLACED ON TOP OF CURB, IF A RAISED EDGE PLACE MARKER ON THE WEDGE, IF NO CURB PLACE ON PAVEMENT ON SIDE LEAST EXPOSED TO TRAFFIC

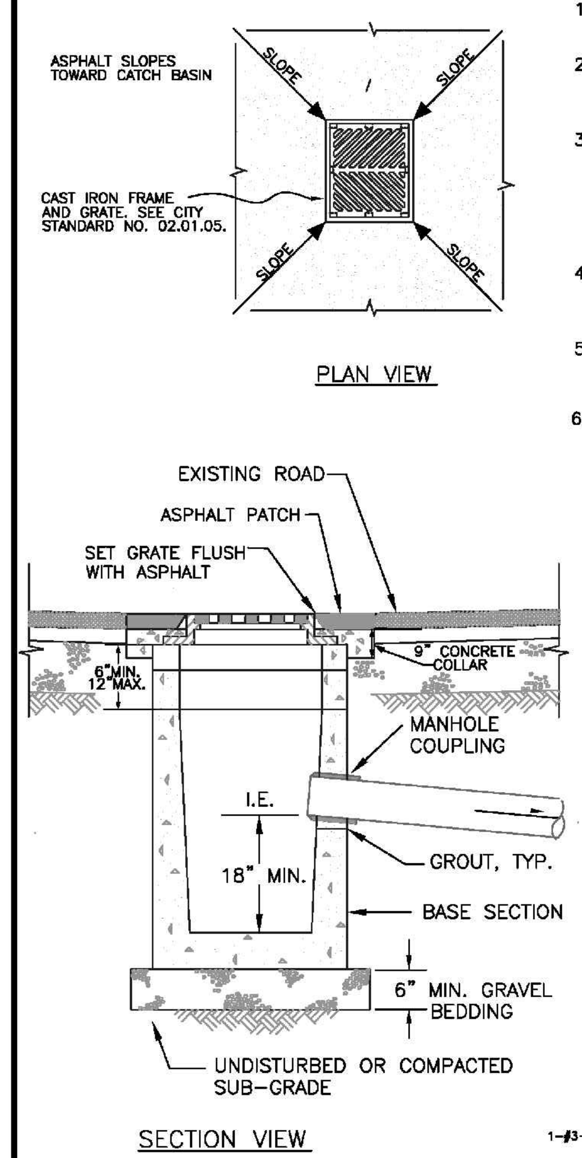

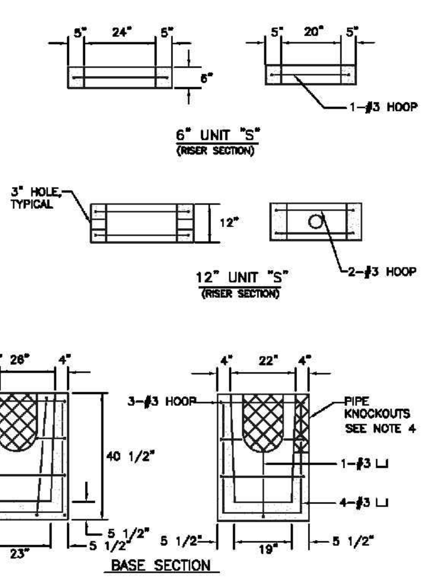

CITY OF PUYALLUP
DEVELOPMENT ENGINEERING and PUBLIC WORKS DEPARTMENTS

CATCH BASIN TYPE 1 (AREA DRAIN)

DRAWN BY	CHECKED BY	APPROVED BY	REVISED BY	CITY STANDARD
LINDA LANSING	LINDA LIAN	COLLEEN HARRIS	XXXX	02.01.02
FILE NAME F:\DWG\COMMON\STDS\CITY\2009\02_SD\02.01.02		DATE APPROVED 09/01/1992	DATE REVISED 06/01/2003	SCALE NTS

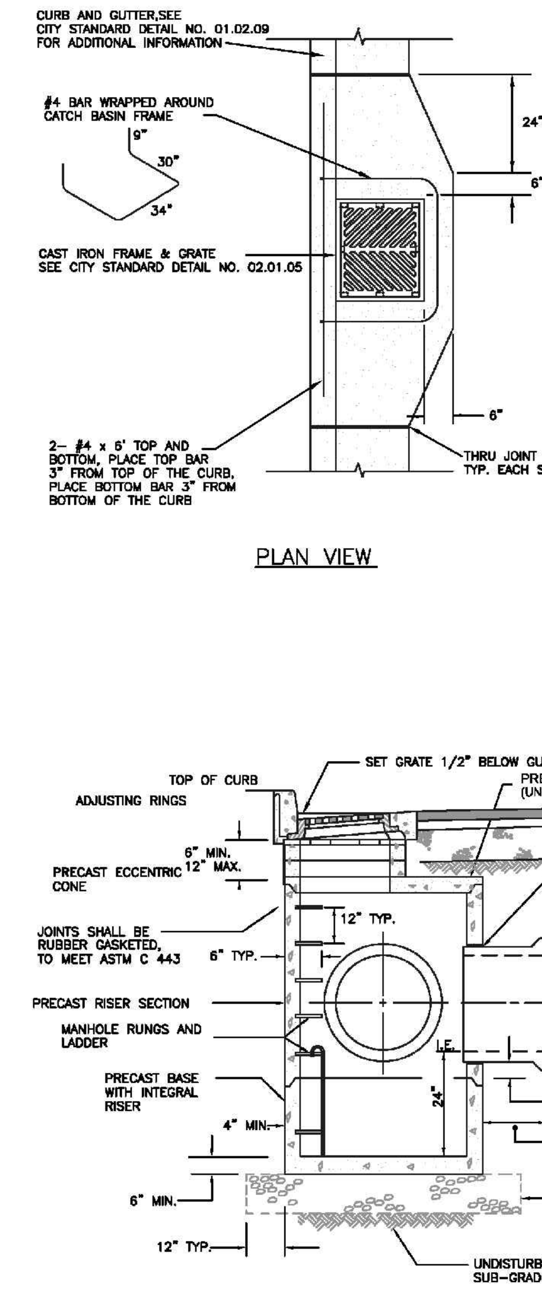

NOTES:

1. MAXIMUM LENGTH OF PIPE BETWEEN CATCH BASINS SHALL BE 400'.
2. MAXIMUM GUTTER LINE FLOW LENGTH SHALL BE 300'.
3. TYPE II CATCH BASIN IS USED FOR DEPTHS GREATER THAN 5'-0" FROM TOP OF GRATE TO I.E.(PIPE INVERT).
4. PRECAST BASE SECTION SHALL BE FURNISHED WITH CUTOUTS OR KNOCKOUTS. KNOCKOUTS SHALL HAVE A WALL THICKNESS OF 2" MIN. KNOCKOUT OR CUTOUT HOLE SIZE SHALL EQUAL THE PIPE OUTER DIAMETER PLUS THE MANHOLE WALL THICKNESS.
5. SEE CITY STANDARD DETAIL NO. 02.01.01 FOR ADDITIONAL INFORMATION REGARDING INSTALLATION OF MANHOLE SECTION.
6. CATCH BASIN SHALL BE CONSTRUCTED IN ACCORDANCE WITH ASTM C 478 (AASHTO M 199) AND ASTM C 890 UNLESS OTHERWISE NOTED.
7. CATCH BASIN MARKER WILL BE AFFIXED WITH MANUFACTURER'S EPOXY IN DRY WEATHER, 40 DEGREES OR WARMER. IF CURB EXIST MARKER IS PLACED ON TOP OF CURB, IF A RAISED EDGE PLACE MARKER ON THE WEDGE, IF NO CURB PLACE ON PAVEMENT ON SIDE LEAST EXPOSED TO TRAFFIC

CITY OF PUYALLUP
DEVELOPMENT ENGINEERING and PUBLIC WORKS DEPARTMENTS

CATCH BASIN TYPE II

DRAWN BY	CHECKED BY	APPROVED BY	REVISED BY	CITY STANDARD
LINDA LANSING	LINDA LIAN	COLLEEN HARRIS	XXXX	02.01.04
FILE NAME F:\DWG\COMMON\STDS\CITY\2009\02_SD\02.01.04		DATE APPROVED 09/01/1992	DATE REVISED 06/01/2003	SCALE NTS

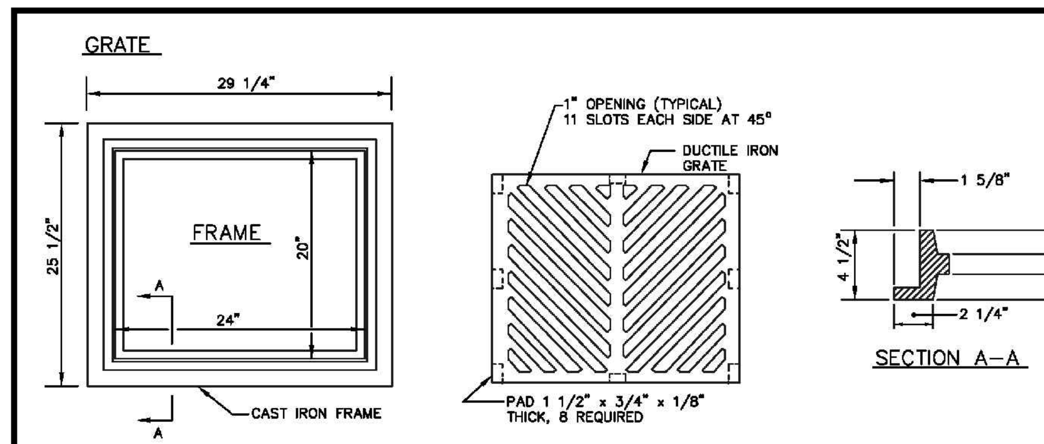

NOTES:

1. MATERIAL SHALL CONFORM TO SECTION 9-05.15 "METAL CASTINGS" OF THE "STANDARD SPECIFICATIONS FOR ROAD, BRIDGE, AND MUNICIPAL CONSTRUCTION" PUBLISHED BY THE STATE DEPARTMENT OF TRANSPORTATION AND AMERICAN PUBLIC WORKS ASSOCIATION, WASHINGTON STATE CHAPTER.
2. THE NAME OF THE MANUFACTURE AND DIRECTION OF FLOW SHALL BE EMBOSSED ON THE TOP SURFACE OF EACH GRATE. LETTERING TO BE RECESSED 1/16".
3. THE MATERIAL USED FOR THE GRATE SHALL BE DESIGNATED BY EMBASSING EITHER DI (FOR DUCTILE IRON) OR CS (FOR CAST STEEL) NEAR THE NAME OF THE MANUFACTURER.
4. DIMENSIONS SHALL HAVE A +/- 1/16" TOLERANCE, EXCEPT AS NOTED.
5. EDGES SHALL HAVE 1/8" RADIUS.
6. WELDING IS NOT PERMITTED.
7. AS AN ALTERNATE, 8 PADS 1 1/2" X 3/4" X 1/8", INTEGRALLY CAST WITH THE GRATE, MAY BE USED.

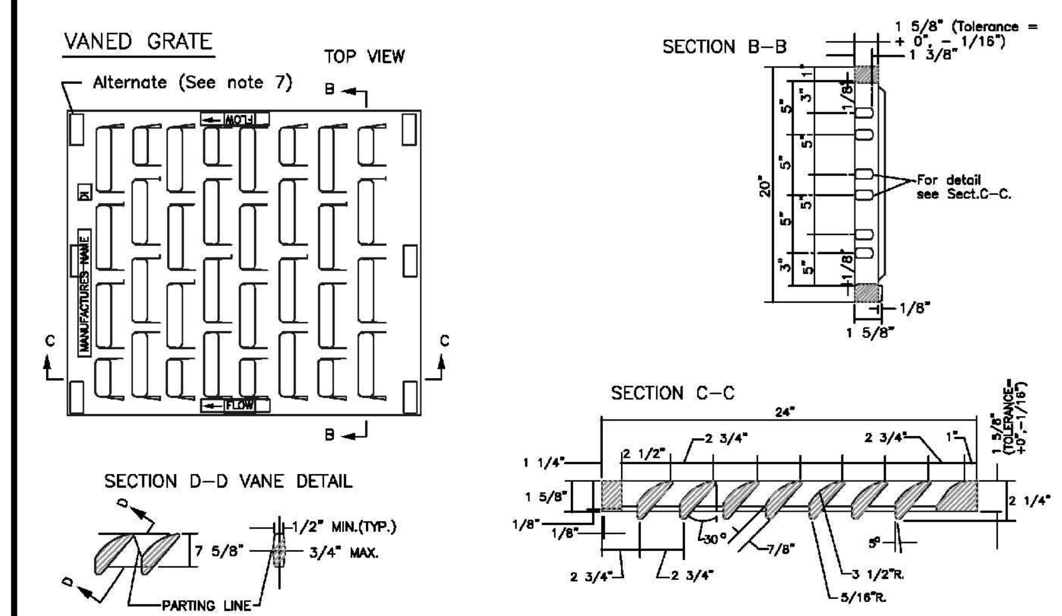

CITY OF PUYALLUP
DEVELOPMENT ENGINEERING and PUBLIC WORKS DEPARTMENTS

CATCH BASIN FRAME AND GRATE/VANED GRATE

DRAWN BY	CHECKED BY	APPROVED BY	REVISED BY	CITY STANDARD
LINDA LANSING	LINDA LIAN	COLLEEN HARRIS	LINDA LIAN	02.01.05
FILE NAME F:\DWG\COMMON\STDS\CITY\2009\02_SD\02.01.05		DATE APPROVED 07/01/2009	DATE REVISED 03/21/11	SCALE NTS

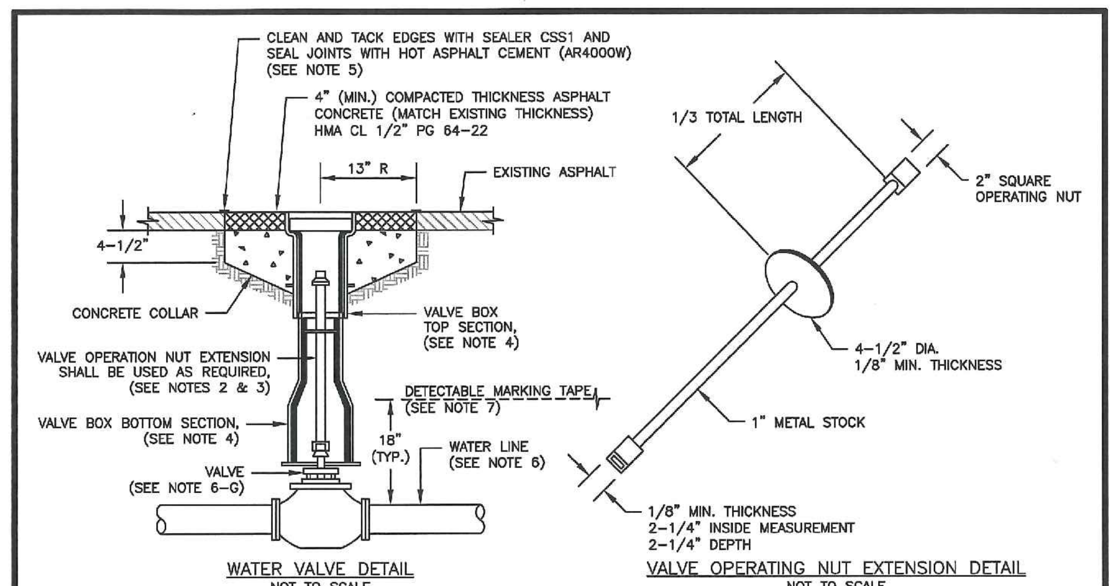

NOTES:

1. WATER MAINS SHALL HAVE A MINIMUM COVER OF 36" FROM PAVED FINAL GRADE IN IMPROVED RIGHT-OF-WAY AND IMPROVED EASEMENTS, AND A MINIMUM OF 48" IN UNIMPROVED RIGHT-OF-WAY AND UNIMPROVED EASEMENTS.
2. VALVE OPERATING NUT EXTENSIONS ARE REQUIRED WHEN THE VALVE NUT IS MORE THAN FIVE (5) FEET BELOW FINISHED GRADE. EXTENSIONS ARE TO BE A MINIMUM OF TWO (2) FEET LONG, ONLY ONE EXTENSION TO BE USED PER VALVE. TOP OF EXTENSION SHALL BE 2 FEET 6 INCHES TO 3 FEET BELOW FINISHED GRADE.
3. ALL VALVE OPERATING NUT EXTENSIONS ARE TO BE MADE OF STEEL, SIZED AS NOTED, AND PAINTED WITH TWO COATS OF METAL PAINT.
4. VALVE BOXES SHALL BE TWO-PIECE, ADJUSTABLE, CAST IRON WITH EXTENSION PIECES (IF NECESSARY), AS MANUFACTURED BY THE VANRICH #940 SEATTLE OR APPROVED EQUAL. THE WORD "WATER" SHALL BE CAST IN RELIEF ON THE VALVE BOX COVER. VALVE BOX TOPS INSTALLED IN ARTERIAL ROADWAYS SHALL BE MANUFACTURED BY EAST JORDAN (EJ) IRONWORKS MODEL 8555 WITH VALVE BOX COVER MODEL 6800 OR APPROVED EQUAL.
5. NEAT LINE CUTS SHALL BE SEALED WITH A HOT PAVING GRADE ASPHALT AND FACE OF CUT TACKED.
6. WATER MAINS SHALL BE CONSTRUCTED AND TESTED IN ACCORDANCE WITH DIVISION 7 OF THE WSDOT STANDARD SPECIFICATIONS SUPPLEMENTED WITH THE FOLLOWING:
   A. DUCTILE IRON PIPE SHALL CONFORM TO AWWA C 151, THICKNESS CLASS 52, AND THE EXTERIOR SHALL BE COATED WITH COAL TAR VARNISH. PIPE AND FITTINGS SHALL BE MORTOR LINED AND SHALL CONFORM TO AWWA C 104. THE THICKNESS OF THE LINING SHALL BE NOT LESS THAN 1/16" THICK FOR 3" TO 12" PIPE, 3/32" THICK FOR 14" TO 24" PIPE, AND 1/8" THICK FOR 30" TO 54" PIPE. THE CEMENT LINING SHALL CONFORM TO THE REQUIREMENTS OF ASTM C 150.
   B. JOINTS SHALL BE TYTON PUSH-ON JOINTS, OR APPROVED EQUAL, OR MECHANICAL JOINT TYPE PER AWWA C 111 EXCEPT WHERE FLANGED JOINTS ARE REQUIRED TO CONNECT TO VALVES OR OTHER EQUIPMENT.
   C. BOLTS AND NUTS FOR BURIED FLANGES LOCATED OUTDOORS, ABOVE GROUND, OR IN OPEN VAULTS IN STRUCTURES SHALL BE TYPE 316 STAINLESS STEEL COMFORMING TO ASTM A 193, GRADE B8M FOR BOLTS, AND ASTM A 194, GRADE 8M FOR NUTS. BOLTS AND NUTS LARGER THAN ONE AND ONE-QUARTER (1-1/4) INCHES SHALL BE STEEL, ASTM A 307, GRADE B, WITH CADMIUM PLATING, ASTM A 165, TYPE NS.
   D. BOLTS USED IN FLANGE INSTALLATION SETS SHALL CONFORM TO ASTM B 193, GRADE B7. NUTS SHALL COMPLY WITH ASTM A 194, GRADE 2H.
   E. PROVIDE A WASHER FOR EACH NUT, WHERE NEEDED. WASHERS SHALL BE OF THE SAME MATERIAL AS THE NUTS.
   F. ALL FITTINGS SHALL CONFORM TO THE REQUIREMENTS OF AWWA C 110 AND AWWA C 111.
   G. RESILIENT SEATED WEDGE GATE VALVES SHALL BE USED FOR TEN (10) INCH MAINS AND SMALLER. BUTTERFLY VALVES SHALL BE USED FOR MAINS GREATER THAN TEN (10) INCHES.
      1) RESILIENT SEATED WEDGE GATE VALVE: GATE VALVES SHALL CONFORM TO THE LATEST AWWA SPECIFICATIONS FOR COLD WATER, DOUBLE-DISK GATE VALVES, 200 PSI WORKING PRESSURE. THEY SHALL BE IRON-BODIED, BRONZE MOUNTED, NON-RISING STEM, WITH TWO (2) INCH SQUARE NUT. COUNTER-CLOCKWISE OPENING, MECHANICAL JOINT AND / OR FLANGED ENDS (6" VALVES ON FIRE HYDRANT LINES WHICH SHALL BE MECHANICAL JOINTS BY FLANGED). VALVE STEMS SHALL BE PROVIDED WITH O-RING SEALS AND SHALL BE AS MANUFACTURED BY THE MUELLER COMPANY OR APPROVED EQUAL.
      2) BUTTERFLY VALVES: BUTTERFLY VALVES CONFORMING WITH AWWA C 504, CLASS 150 AND SHALL HAVE STANDARD AWWA TWO (2) INCH SQUARE NUT.
7. DETECTABLE MARKING TAPE SHALL BE INSTALLED 18" ABOVE PIPE, BE BLUE IN COLOR, AND READ "CAUTION WATER LINE BELOW" MEETING WSDOT SPEC. 9-15.18.

CITY OF PUYALLUP OFFICE of THE CITY ENGINEER
APPROVED FOR PUBLICATION
DATE SEALED: 2/5/2018

WATER VALVES AND MAINS

(NOT TO SCALE)
CITY STANDARD 03.01.01

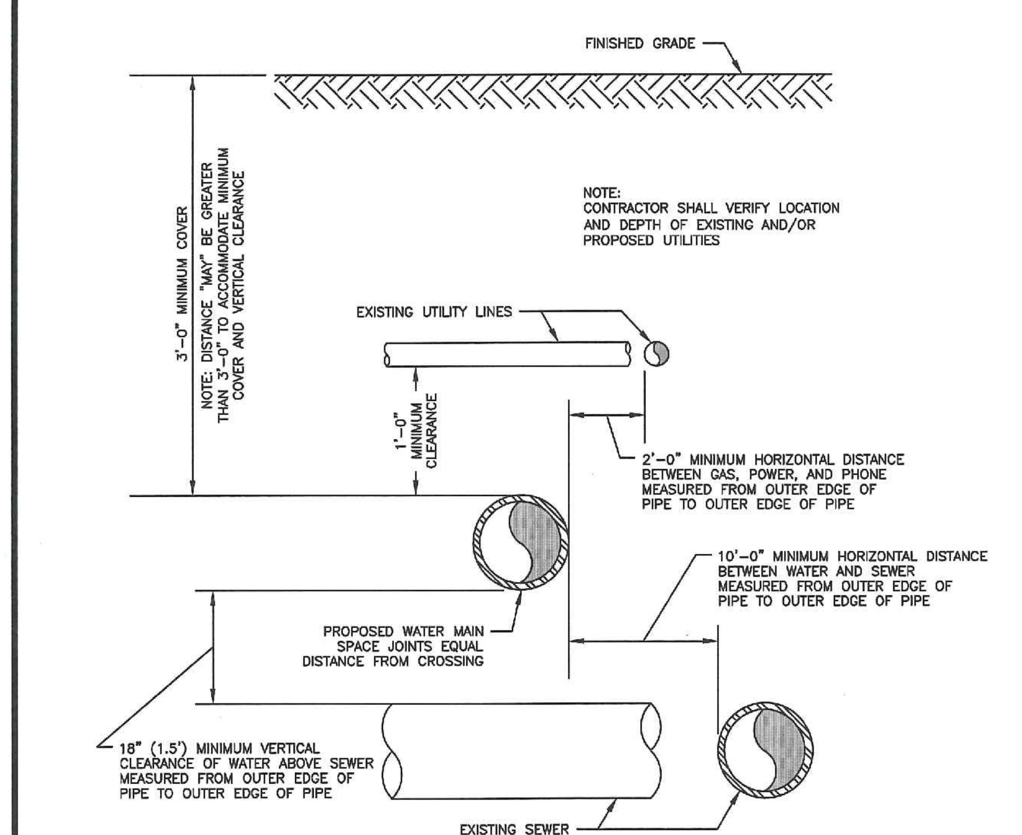

SEE CITY STANDARD 03.01.03-2 FOR ADDITIONAL NOTES FOR THIS DETAIL

CITY OF PUYALLUP OFFICE of THE CITY ENGINEER
APPROVED FOR PUBLICATION
DATE SEALED: 2/5/2018

WATER MAIN CROSSING OTHER UTILITIES

(NOT TO SCALE)
CITY STANDARD 03.01.03-1

NOTES FOR WATER MAIN CROSSING OTHER UTILITIES
CITY STANDARD 03.01.03-1

WHEN LOCAL CONDITIONS PREVENT THE SEPARATIONS DESCRIBED ON CITY STANDARD 03.01.03-1, A SEWER MAY BE LAID CLOSER THAN 10-FEET HORIZONTALLY OR 18-INCHES VERTICALLY TO A WATER LINE, PROVIDED THE GUIDELINES BELOW ARE FOLLOWED:

UNUSUAL CONDITIONS (PARALLEL SYSTEMS)

1. SEWER LINE IS LAID IN A SEPARATE TRENCH FROM THE WATER LINE.
2. WHEN 18-INCHES VERTICAL SEPARATION CANNOT BE OBTAINED, THE SEWER SHALL BE CONSTRUCTED OF MATERIALS AND JOINTS THAT ARE EQUIVALENT TO WATER MAIN STANDARDS OF CONSTRUCTION AND SHALL BE PRESSURE TESTED TO ENSURE WATER TIGHTNESS PRIOR TO BACKFILLING.
3. THE WATER LINE SHALL BE PLACED ON A BENCH OF UNDISTURBED EARTH WITH THE BOTTOM OF THE WATER PIPE AT LEAST 18-INCHES ABOVE THE CROWN OF THE SEWER, AND SHALL HAVE AT LEAST 5-FEET OF HORIZONTAL SEPARATION AT ALL TIMES. THE CITY RESERVES THE RIGHT TO REQUIRE SUPPLEMENTAL MITIGATION EFFORTS, SUCH AS IMPERMEABLE BARRIERS OR OTHER MEANS, FOR ADDITIONAL PROTECTION.
4. THE SEWER SHALL NOT BE INSTALLED IN THE SAME DITCH AS A POTABLE WATER LINE WITHOUT PRIOR WRITTEN APPROVAL BY THE CITY OF PUYALLUP.

UNUSUAL CONDITIONS (PERPENDICULAR SYSTEMS)

CONDITION A – GRAVITY SEWERS PASSING UNDER WATER LINES (ALL OF THE FOLLOWING APPLY)

1. ONE FULL SEGMENT (NOT LESS THAN 18-FEET LONG) OF DUCTILE IRON CLASS 52 WATER PIPE, AND THE LONGEST STANDARD SEWER PIPE LENGTH AVAILABLE FROM THE MANUFACTURER SHALL BE USED WITH THE PIPES CENTERED TO MAXIMIZE JOINT SEPARATION.
2. STANDARD GRAVITY-SEWER MATERIAL ENCASED IN CONCRETE OR IN A ONE-QUARTER-INCH THICK CONTINUOUS STEEL, DUCTILE IRON, OR PRESSURE RATED PVC PIPE WITH A DIMENSION RATIO (THE RATIO OF THE OUTSIDE DIAMETER TO THE PIPE WALL THICKNESS) OF 18 OR LESS, WITH ALL VOIDS PRESSURE-GROUTED WITH SAND-CEMENT GROUT OR BENTONITE.

   EXAMPLE OF DIMENSION RATIO (DR): OUTSIDE PIPE DIAMETER DIVIDED BY THE WALL THICKNESS OR OD/T. FOR 8-INCH SCH. 80 PVC PIPE (T=0.5 INCHES), THE DR IS 8.625/0.5=17.25

CONDITION B – GRAVITY SEWER PASSING OVER WATER LINES

WATER LINES SHALL BE PROTECTED BY PROVIDING:

1. A VERTICAL SEPARATION OF AT LEAST 18-INCHES BETWEEN THE INVERT OF THE SEWER AND THE CROWN OF THE WATER LINE.
2. ADEQUATE STRUCTURAL SUPPORT FOR THE SEWER LINE TO PREVENT EXCESSIVE DEFLECTION OF JOINTS AND SETTLING ON AND BREAKING OF THE WATER LINE.
3. THE SEWER PIPE SHALL BE THE LONGEST STANDARD SEWER PIPE LENGTH AVAILABLE FROM THE MANUFACTURER WITH THE WATER AND SEWER PIPES CENTERED TO MAXIMIZE JOINT SEPARATION.
4. THE SEWER LINE CASING EQUIVALENT TO THAT SPECIFIED IN A(2) ABOVE.

CITY OF PUYALLUP OFFICE of THE CITY ENGINEER
APPROVED FOR PUBLICATION
DATE SEALED: 2/5/2018

WATER MAIN CROSSING OTHER UTILITIES (NOTES)

(NOT TO SCALE)
CITY STANDARD 03.01.03-2

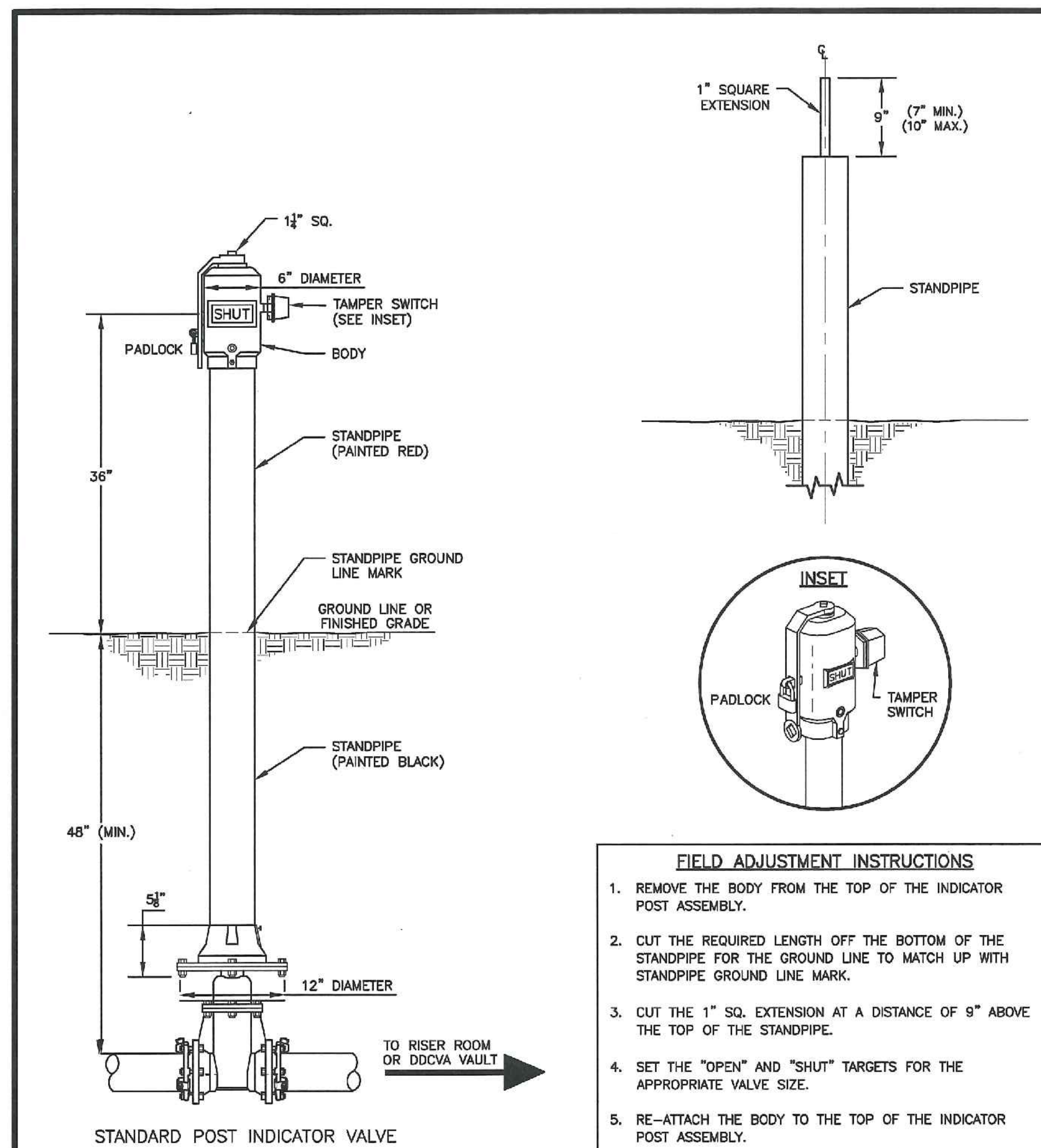

FIELD ADJUSTMENT INSTRUCTIONS

1. REMOVE THE BODY FROM THE TOP OF THE INDICATOR POST ASSEMBLY.
2. CUT THE REQUIRED LENGTH OFF THE BOTTOM OF THE STANDPIPE FOR THE GROUND LINE TO MATCH UP WITH STANDPIPE GROUND LINE MARK.
3. CUT THE 1" SQ. EXTENSION AT A DISTANCE OF 9" ABOVE THE TOP OF THE STANDPIPE.
4. SET THE "OPEN" AND "SHUT" TARGETS FOR THE APPROPRIATE VALVE SIZE.
5. RE-ATTACH THE BODY TO THE TOP OF THE INDICATOR POST ASSEMBLY.
6. ALL POST INDICATOR VALVES SHALL BE INSTALLED WITH AN ELECTRONIC UL LISTED TAMPER SWITCH.
7. THERE SHALL BE 36" OF UNOBSTRUCTED CLEARANCE AROUND THE PERIMETER OF ALL POST INDICATOR VALVES.
8. POST INDICATOR VALVE SHALL BE LOCATED AT A MINIMUM 5-ft FROM BUILDING.

CITY OF PUYALLUP OFFICE of THE CITY ENGINEER
APPROVED FOR PUBLICATION
DATE SEALED: 2/5/2018

POST INDICATOR VALVE

(NOT TO SCALE)
CITY STANDARD 03.10.03

APPROVED

BY ______________
CITY OF PUYALLUP DEVELOPMENT ENGINEERING

DATE ______________

NOTE: THIS APPROVAL IS VOID AFTER 180 DAYS FROM APPROVAL DATE.
THE CITY WILL NOT BE RESPONSIBLE FOR ERRORS AND/OR OMISSIONS ON THESE PLANS.
FIELD CONDITIONS MAY DICTATE CHANGES TO THESE PLANS AS DETERMINED BY THE DEVELOPMENT ENGINEERING MANAGER.

No.	Date	By	Ckd.	Appr.	Revision
3	10/03/24	DL	DL	JSG	RESPONSE TO CITY COMMENTS, DATED APRIL 12, 2024
2	03/05/24	DL	DL	JSG	RESPONSE TO CITY COMMENTS, DATED FEBRUARY 06, 2024

Title: **CONSTRUCTION DETAILS**
FORTRESS - PUYALLUP

For: **CREF3 PUYALLUP OWNER LLC**
11611 SAN VICENTE BLVD
10TH FLOOR
LOS ANGELES, CA 90049

JASON GUY HUBBELL, STATE OF WASHINGTON, 38950, REGISTERED PROFESSIONAL ENGINEER
10/03/2024

Scale: Horizontal NA; Vertical N/A

Designed DL
Drawn RDC
Checked DL
Approved JGH
Date 6/23/23

Barghausen Consulting Engineers, Inc.
18215 72nd Avenue South
Kent, WA 98032
425.251.6222
barghausen.com

Job Number **22085**
Sheet **C26** of **34**

P:\22000s\22085\engineering\22085-D.dwg 4/29/2024 12:37 PM RCOX

PORTION OF SE QUARTER OF SEC 27, TWN 20 N, RGE. 4 E, W.M.
CITY OF PUYALLUP, PIERCE COUNTY, WASHINGTON

CONSTRUCTION DETAILS

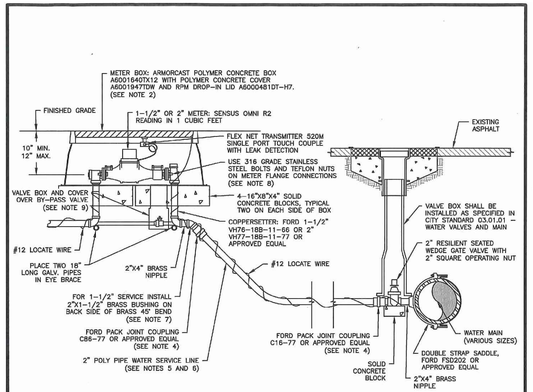

NOTES:

1. ALL MATERIALS AND FITTINGS SHALL BE AS SPECIFIED OR AN APPROVED EQUAL.
2. NORMALLY THE WATER METER BOX SHOULD BE LOCATED IN THE PLANTING STRIP. IF SIDEWALK IS AGAINST THE CURB, PLACE METER BOX DIRECTLY BEHIND THE SIDEWALK. THE WATER METER BOX SHALL NOT BE LOCATED IN HARD SURFACES. WHEN UNAVOIDABLE, EXCEPTIONS CAN BE MADE AT END OF CUL-DE-SACS OR PAN HANDLED LOTS.
3. WATER MAINS SHALL HAVE A MINIMUM COVER OF 36" IN IMPROVED RIGHT-OF-WAY AND IMPROVED EASEMENTS, AND A MINIMUM OF 48" IN UNIMPROVED RIGHT-OF-WAY AND UNIMPROVED EASEMENTS.
4. ALL POLY PIPE COUPLINGS SHALL USE PIPE INSERT STIFFENERS.
5. THE WATER SERVICE LINE SHALL BE BEDDED IN WASHED SAND WITH 36" OF COVER BELOW FINISHED GRADE WITHIN THE RIGHT-OF-WAY. THE WATER SERVICE LINE SHALL BE ONE CONTINUOUS PIECE WITH NO SPLICES.
6. ALL POLY PIPE SHALL BE HIGH DENSITY POLY (IRON PIPE SIZE) MEETING ASTM D-2239-SIDR 7, BLUE IN COLOR, 200 PSI MINIMUM.
7. FOR A 1-1/2" WATER SERVICE, ALL MATERIAL SHALL BE 2" FROM THE WATER MAIN TO THE COPPERSETTER. REDUCE FROM 2" TO 1-1/2" IMMEDIATELY BEFORE COPPERSETTER.
8. THE STAINLESS STEEL METER FLANGE BOLTS SHALL BE 5/8" DIAMETER FOR THE 1-1/2" METER, AND 3/4" DIAMETER FOR THE 2" METER.
9. PROVIDE A 6" CIRCULAR VALVE BOX WITH COVER (APPLIED ENGINEERING PRODUCT MODEL 708 WITH GREEN LID OR AN APPROVED EQUAL) OVER BY-PASS VALVE.

CITY OF PUYALLUP OFFICE of THE CITY ENGINEER | APPROVED FOR PUBLICATION 10/15/2019 | 1-1/2" AND 2" WATER SERVICE CONNECTION | (NOT TO SCALE) | CITY STANDARD 03.03.02

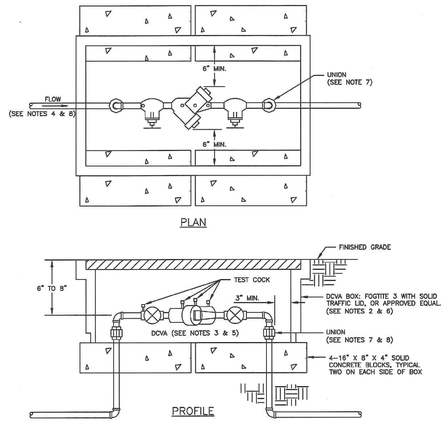

NOTES:

1. BACKFLOW ASSEMBLY MUST BE SELECTED FROM WASHINGTON STATE DEPARTMENT OF HEALTH'S LIST OF BACKFLOW PREVENTION ASSEMBLIES APPROVED FOR INSTALLATION IN WASHINGTON STATE, LATEST EDITION.
2. THE DCVA SHALL BE INSTALLED WITH ADEQUATE SPACE TO FACILITATE MAINTENANCE AND TESTING. IT SHALL BE TESTED AFTER INSTALLATION, BY A WASHINGTON STATE CERTIFIED BACK-FLOW ASSEMBLY TESTER, TO INSURE ITS SATISFACTORY OPERATION BEFORE OCCUPANCY, AND ANNUALLY THEREAFTER. SEND TEST RESULTS TO: CITY OF PUYALLUP, WATER QUALITY OPERATIONS, 1100 39TH AVE SE, PUYALLUP, WA 98374.
3. DCVA MUST BE PURCHASED AS A UNIT. NO MODIFICATIONS TO THE ASSEMBLY ARE ALLOWED.
4. DCVA SHALL BE PLACED IMMEDIATELY DOWNSTREAM OF WATER METER. WHEN IRRIGATION SYSTEM IS CONNECTED OFF DOMESTIC WATER LINE, IRRIGATION DCVA SHALL BE PLACED IMMEDIATELY DOWNSTREAM OF THE BRANCH CONNECTION.
5. DCVA SHALL BE SIZED EQUAL OR COMPARABLE TO METER SIZE.
6. METER BOX SHALL BE LARGE ENOUGH TO ALLOW THE MINIMUM SETBACKS ILLUSTRATED ABOVE. METER BOX LID SHALL BE A TRAFFIC LID WITH A H-20 LOADING.
7. DIELECTRIC UNIONS MUST BE USED TO SEPARATE DISSIMILAR MATERIALS.
8. USE ONLY BRASS OR COPPER BETWEEN THE METER AND THE UNION ON THE CUSTOMER'S SIDE OF THE DCVA.

CITY OF PUYALLUP OFFICE of THE CITY ENGINEER | APPROVED FOR PUBLICATION 2/5/2019 | 2" AND SMALLER DOUBLE CHECK VALVE ASSEMBLY INSTALLATION | (NOT TO SCALE) | CITY STANDARD 03.04.01

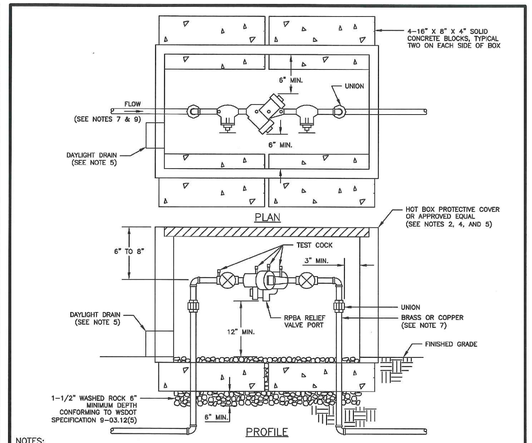

NOTES:

1. BACKFLOW ASSEMBLY MUST BE SELECTED FROM WASHINGTON STATE DEPARTMENT OF HEALTH'S LIST OF BACKFLOW PREVENTION ASSEMBLIES APPROVED FOR INSTALLATION IN WASHINGTON STATE, LATEST EDITION.
2. THE RPBA SHALL BE INSTALLED WITH ADEQUATE SPACE TO FACILITATE MAINTENANCE AND TESTING. IT SHALL BE TESTED AFTER INSTALLATION, BY A WASHINGTON STATE CERTIFIED BACK-FLOW ASSEMBLY TESTER, TO INSURE ITS SATISFACTORY OPERATION BEFORE OCCUPANCY, AND ANNUALLY THEREAFTER. SEND TEST RESULTS TO: CITY OF PUYALLUP, WATER QUALITY OPERATIONS, 1100 39TH AVE SE, PUYALLUP, WA 98374.
3. THE RPBA MUST BE PURCHASED AS A UNIT. NO MODIFICATIONS TO THE ASSEMBLY ARE ALLOWED.
4. THE RPBA SHALL NOT BE INSTALLED IN A PIT BELOW GROUND LEVEL.
5. THE PROTECTIVE COVERING FOR THE RPBA, WHICH PROTECTS THE ASSEMBLY FROM FREEZING, MUST INCLUDE A DAYLIGHT DRAIN. THE DRAIN MUST BE INSTALLED ABOVE GROUND OR ABOVE THE MAXIMUM FLOOD LEVEL, WHICHEVER IS HIGHER. THE DRAIN MUST BE A MINIMUM OF TWICE THE SIZE OF THE RPBA, TO BE ABLE TO HANDLE THE VOLUME OF WATER THAT POTENTIALLY COULD BE DISCHARGED FROM THE RELIEF VALVE PORT.
6. THE RPBA SHALL BE SIZED EQUAL OR COMPARABLE TO THE METER SIZE.
7. USE ONLY BRASS OR COPPER BETWEEN THE METER AND THE BOTTOM VERTICAL 90 DEGREE BEND ON THE CUSTOMER'S SIDE OF THE RPBA.
8. DIELECTRIC UNIONS MUST BE USED TO SEPARATE DISSIMILAR MATERIALS.
9. THE RPBA SHOULD BE LOCATED IMMEDIATELY DOWN STREAM OF THE METER, AND SHOULD NOT BE INSTALLED INSIDE A BUILDING.
10. AN RPBA INSTALLED MORE THAN FIVE (5) FEET ABOVE FLOOR LEVEL MUST HAVE A PLATFORM UNDER IT FOR THE TESTER OR MAINTENANCE PERSON TO STAND ON. THE PLATFORM MUST BE OSHA APPROVED AND MEET ALL APPLICABLE SAFETY STANDARDS AND CODES.

CITY OF PUYALLUP OFFICE of THE CITY ENGINEER | APPROVED FOR PUBLICATION 2/5/2019 | 2" AND SMALLER REDUCED PRESSURE BACKFLOW ASSEMBLY INSTALLATION | (NOT TO SCALE) | CITY STANDARD 03.04.02

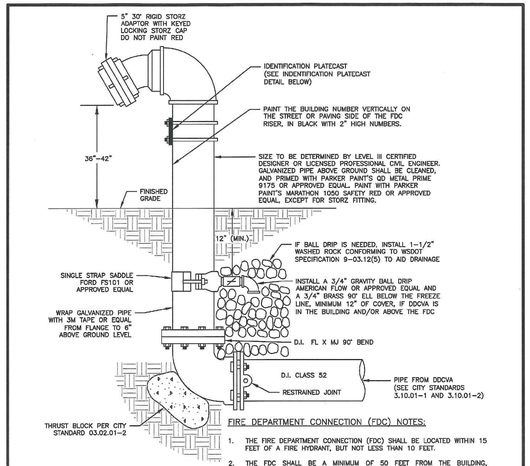

FIRE DEPARTMENT CONNECTION (FDC) NOTES:

1. THE FIRE DEPARTMENT CONNECTION (FDC) SHALL BE LOCATED WITHIN 15 FEET OF A FIRE HYDRANT, BUT NOT LESS THAN 10 FEET.
2. THE FDC SHALL BE A MINIMUM OF 50 FEET FROM THE BUILDING, UNLESS APPROVED BY THE FIRE CODE OFFICIAL, BUT NEVER LESS THAN 5 FEET FROM BUILDING.

IDENTIFICATION PLATECAST DETAIL

IDENTIFICATION PLATECAST DETAIL NOTES:

1. IDENTIFICATION PLATECAST WILL BE BRASS
2. IDENTIFICATION PLATECAST WILL BE 1/4" THICK
3. LETTERS WILL BE ONE INCH HIGH AND RAISED
4. USE TWO (2) ZINC U-BOLTS TO AFFIX TO PIPE

CITY OF PUYALLUP OFFICE of THE CITY ENGINEER | APPROVED FOR PUBLICATION 2/5/2018 | FIRE DEPARTMENT CONNECTION (FDC) | (NOT TO SCALE) | CITY STANDARD 03.10.02

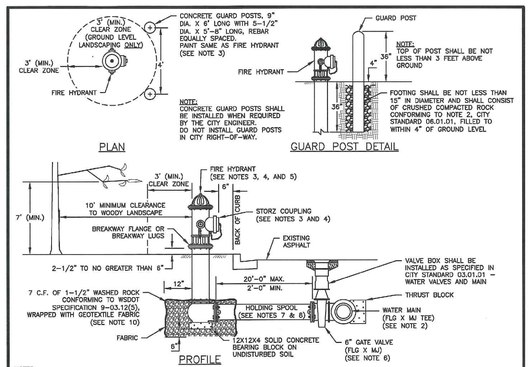

NOTES:

1. ALL MATERIALS AND FITTINGS SHALL BE AS SPECIFIED OR APPROVED EQUAL.
2. WATER MAINS SHALL HAVE A MINIMUM COVER OF 36" IN IMPROVED RIGHT-OF-WAY AND IMPROVED EASEMENTS, AND A MINIMUM 48" IN UNIMPROVED RIGHT-OF-WAY AND UNIMPROVED EASEMENTS.
3. THE FIRE HYDRANT AND CONCRETE GUARD POSTS SHALL BE PAINTED, RUST-OLEUM SAFETY YELLOW #7543 (TWO COATS) OR AN APPROVED EQUAL. THE STORZ FITTING SHALL NOT BE PAINTED.
4. FIRE HYDRANTS SHALL HAVE TWO 2-1/2" HOSE PORTS (NATIONAL STANDARD THREAD) WITH CAPS AND CHAINS AND ONE 4" PUMPER PORT (#8 TACOMA STEAMER PORT THREAD) WITH A 5" "STORZ" COUPLING AND BLIND CAP INSTALLED ON THE STEAMER PORT, (STEAMER PORT SHALL FACE THE STREET), 1-1/4" PENTAGONAL OPERATING NUT (COUNTER-CLOCKWISE OPENING), O-RING TYPE STUFFING BOX, AUTOMATIC BARREL DRAINS AND 5-1/4" MAIN VALVE OPENING. HYDRANTS SHALL BE DESIGNED IN A MANNER THAT WILL PREVENT BARREL BREAKAGE WHEN STRUCK BY A VEHICLE. HYDRANTS SHALL CONFORM TO THE LATEST REVISION OF AWWA SPECIFICATIONS NO. C 502-73 FOR FIRE HYDRANTS FOR ORDINARY WATER SERVICE. FIRE HYDRANTS SHALL INCLUDE THE ENTIRE ASSEMBLY COMPLETE, INCLUDING HYDRANT, GATE VALVE AND BOX, CONNECTING PIPING, FITTINGS, AND ACCESSORIES.
5. FIRE HYDRANTS SHALL BE AVK, CLOW MEDALLION, M & H 929, MUELLER CENTURION, OR WATEROUS.
6. GATE VALVES SHALL CONFORM TO THE LATEST AWWA SPECIFICATIONS FOR COLD WATER, RESILIENT SEATED WEDGE GATE VALVES, 200 PSI WORKING PRESSURE. THEY SHALL BE STEM, IRON-BODIED BRONZE-MOUNTED, NON-RISING STEM, COUNTER-CLOCKWISE OPENING, MECHANICAL JOINT BY FLANGED. VALVE STEMS SHALL BE PROVIDED WITH O-RING SEALS AND SHALL BE AS MANUFACTURED BY THE MUELLER COMPANY OR APPROVED EQUAL.
7. THE HOLDING SPOOL SHALL BE A MECHANICAL-JOINT (M.J.) HOLDING SPOOL, WITH THE USE OF MEGA-LUG CONNECTORS OR APPROVED EQUAL WITH CLASS 52 DUCTILE IRON PIPE.
8. IF DISTANCE BETWEEN WATER MAIN AND FIRE HYDRANT IS GREATER THAN 17 FEET, A RESTRAINED JOINT IS REQUIRED ON ADDITIONAL JOINT. MAXIMUM HYDRANT RUN ALLOWED IS 20 FEET.
9. FIRE HYDRANTS SHALL BE LOCATED A MINIMUM OF 50 FEET FROM A BUILDING OR STRUCTURE.
10. THE CONTRACTOR SHALL PLACE A 6 OZ. GEOTEXTILE FABRIC AROUND THE WASHED ROCK AREA, ENDS TO OVERLAP.
11. A FLUORESCENT ORANGE BAG MUST COVER AND BE SECURED TO THE FIRE HYDRANT UNTIL APPROVED FOR USE BY CITY ENGINEER.
12. A MINIMUM THREE FOOT (3') RADIUS UNOBSTRUCTED CLEAR ZONE (WORK AREA) SHALL BE PROVIDED AROUND ALL FIRE HYDRANTS. ADDITIONALLY, NO WOODY LANDSCAPE SHALL BE PLANTED WITHIN TEN FEET (10') OF ANY FIRE HYDRANT. OVERREACHING BRANCHES OF TREES ADJACENT TO HYDRANTS SHALL HAVE A MAINTAINED VERTICAL CLEARANCE OF SEVEN (7') FEET ABOVE FINISHED GRADE OF THE FIRE HYDRANT.

CITY OF PUYALLUP OFFICE of THE CITY ENGINEER | APPROVED FOR PUBLICATION 2/5/2019 | FIRE HYDRANT ASSEMBLY | (NOT TO SCALE) | CITY STANDARD 03.05.01

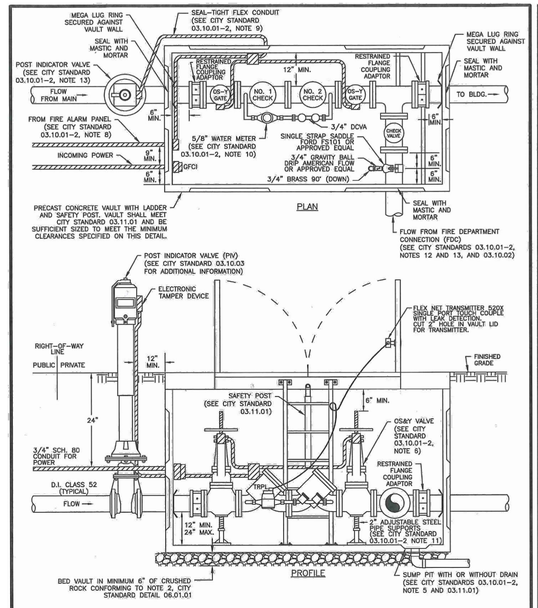

INSTALLATION LOCATION NOTE:
DOUBLE DETECTOR-CHECK VALVE ASSEMBLY (DDCVA) MAY BE INSTALLED WITHIN A BUILDING. THE PLAN AND PROFILE VIEW OF THIS DETAIL SHOWS ALTERNATIVE EXTERIOR VAULT INSTALLATION.

CITY STANDARD 03.10.01-2 COVERS ADDITIONAL NOTES FOR THIS DETAIL.

CITY OF PUYALLUP OFFICE of THE CITY ENGINEER | APPROVED FOR PUBLICATION 10/15/2019 | DOUBLE DETECTOR-CHECK VALVE ASSEMBLY INSTALLATION | (NOT TO SCALE) | CITY STANDARD 03.10.01-1

NOTES FOR: DOUBLE DETECTOR CHECK VALVE ASSEMBLY (DDCVA) INSTALLATION CITY STANDARD 03.10.01-1

1. BACKFLOW ASSEMBLY MUST BE SELECTED FROM WASHINGTON STATE DEPARTMENT OF HEALTH'S LIST OF BACKFLOW PREVENTION ASSEMBLIES APPROVED FOR INSTALLATION IN WASHINGTON STATE, LATEST EDITION.
2. THE DDCVA SHALL BE INSTALLED WITH ADEQUATE SPACE TO FACILITATE MAINTENANCE AND TESTING. IT SHALL BE TESTED AFTER INSTALLATION, BY A WASHINGTON STATE CERTIFIED BACK-FLOW ASSEMBLY TESTER, TO INSURE ITS SATISFACTORY OPERATION BEFORE OCCUPANCY, AND ANNUALLY THEREAFTER. SEND TEST RESULTS TO: CITY OF PUYALLUP, WATER QUALITY OPERATIONS, 1100 39TH AVE SE, PUYALLUP, WA 98374.
3. DDCVA MUST BE PURCHASED AS A UNIT. NO MODIFICATIONS TO THE ASSEMBLY ARE ALLOWED.
4. DDCVA IS ALLOWED TO BE LOCATED WITHIN A BUILDING AS APPROVED BY THE FIRE CODE OFFICIAL. WHEN THE DDCVA IS LOCATED WITHIN A BUILDING, THE FIRE DEPARTMENT CONNECTION (FDC) BALL DRIP SHALL DRAIN TO THE NEAREST APPROVED ON-SITE STORM DRAINAGE STRUCTURE.
5. IN A VAULT INSTALLATION, IF VAULT CANNOT BE DRAINED TO DAYLIGHT, A 1/4 HP SUMP PUMP SHALL BE INSTALLED IN THE SUMP PIT OF THE VAULT. IT SHALL BE WIRED PER WASHINGTON STATE ELECTRICAL CODE, AND INSPECTED BY A STATE ELECTRICAL INSPECTOR. THE DISCHARGE PIPE SHALL BE CONNECTED TO THE NEAREST APPROVED ON-SITE STORM DRAINAGE STRUCTURE.
6. DDCVA OUTSIDE STEM AND YOKE (OS&Y) GATE VALVES, AND THE POST INDICATOR VALVE (PIV), SHALL HAVE SUPERVISED TAMPER SWITCHES.
7. ALL ELECTRICAL SHALL BE INSPECTED BY A WASHINGTON STATE ELECTRICAL INSPECTOR.
8. IN A VAULT INSTALLATION, RUN TWO 3/4" SCHEDULE 80 P.V.C. CONDUITS TO THE VAULT. ONE WILL BE USED FOR A GFCI PROTECTED OUTLET, AND ONE WILL BE FOR LOW VOLTAGE COMING FROM THE FIRE ALARM PANEL. INSTALL AN APPLETON FSCA OR FDCA CAST DEVICE BOX OR APPROVED EQUAL ON THE VAULT WALL AT THE CONDUIT PENETRATION.
9. IN A VAULT INSTALLATION, RUN LOW VOLTAGE WIRE INSIDE VAULT AND TO PIV THROUGH SEAL-TIGHT FLEX CONDUIT. CONDUIT SHALL BE SECURELY FASTENED PERPENDICULAR OR HORIZONTALLY TO THE WALLS OF THE VAULT.
10. WATER METER SHALL BE A SENSUS SRII TRPL READING IN 1 CUBIC FEET.
11. PIPE SUPPORTS SHALL BE RUST-PROTECTED WITH ALUMINUM PAINT.
12. THE FDC SHALL BE LOCATED WITHIN 15 FEET OF A FIRE HYDRANT, BUT NOT LESS THAN 10 FEET.
13. THE FDC AND PIV SHALL BE A MINIMUM OF 50 FEET FROM A BUILDING, UNLESS APPROVED BY THE CITY OF PUYALLUP FIRE CODE OFFICIAL, BUT NEVER LESS THAN 5 FEET FROM BUILDING.
14. A DDCVA INSTALLED MORE THAN 5 FEET ABOVE THE FLOOR LEVEL MUST HAVE A PLATFORM UNDER IT FOR THE TESTER OR MAINTENANCE PERSON TO STAND ON. THE PLATFORM MUST BE OSHA APPROVED AND MEET ALL APPLICABLE SAFETY STANDARDS AND CODES.

CITY OF PUYALLUP OFFICE of THE CITY ENGINEER | APPROVED FOR PUBLICATION 2/5/2018 | DOUBLE DETECTOR-CHECK VALVE ASSEMBLY INSTALLATION (NOTES) | (NOT TO SCALE) | CITY STANDARD 03.10.01-2

APPROVED

BY _____
CITY OF PUYALLUP
DEVELOPMENT ENGINEERING

DATE _____

NOTE: THIS APPROVAL IS VOID AFTER 180 DAYS FROM APPROVAL DATE.
THE CITY WILL NOT BE RESPONSIBLE FOR ERRORS AND/OR OMISSIONS ON THESE PLANS.
FIELD CONDITIONS MAY DICTATE CHANGES TO THESE PLANS AS DETERMINED BY THE DEVELOPMENT ENGINEERING MANAGER.

No.	Date	By	Ckd.	Appr.	Revision
3	10/03/24	DL	DL	JSG	RESPONSE TO CITY COMMENTS, DATED APRIL 12, 2024
2	03/06/24	DL	DL	JSG	RESPONSE TO CITY COMMENTS, DATED FEBRUARY 06, 2024

Title: CONSTRUCTION DETAILS

For: CREF3 PUYALLUP OWNER LLC
11611 SAN VICENTE BLVD
10TH FLOOR
LOS ANGELES, CA 90049

FORTRESS - PUYALLUP

JASON GUY HUBER — STATE OF WASHINGTON — 38950 — REGISTERED PROFESSIONAL ENGINEER — 10/03/2024

Scale: Horizontal NA | Vertical N/A

Designed DL | Drawn RDC | Checked DL | Approved JGH | Date 6/23/23

Barghausen Consulting Engineers, Inc.
18215 72nd Avenue South
Kent, WA 98032
425.251.6222 barghausen.com

Job Number 22085

Sheet C27 of 34

P:\22000s\22085\engineering\22085-D.dwg 4/29/2024 12:37 PM RCOX

PORTION OF SE QUARTER OF SEC 27, TWN 20 N, RGE. 4 E, W.M.
CITY OF PUYALLUP, PIERCE COUNTY, WASHINGTON

CONSTRUCTION DETAILS

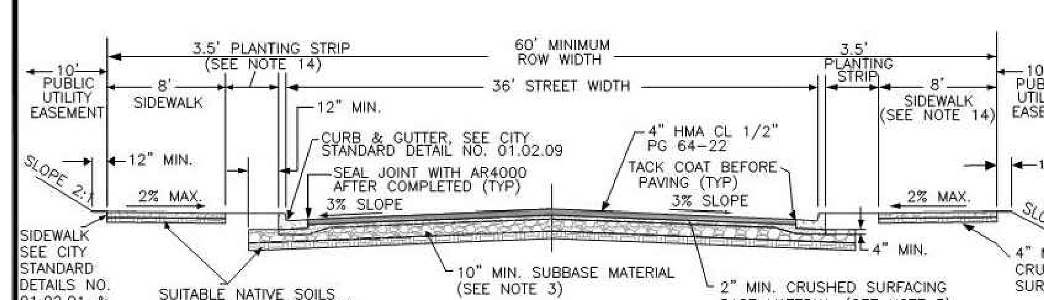

TYPE OF STREET	* MAXIMUM CENTERLINE GRADE	MINIMUM ROW WIDTH	MINIMUM STREET WIDTH	* MINIMUM PAVEMENT THICKNESS
COMMERCIAL COLLECTORS	10%	60'	36'	4"

*MINIMUM CENTERLINE AND FLOWLINE GRADES FOR ALL STREETS SHALL BE 0.5%
*MATCH EXISTING PAVEMENT THICKNESS IF GREATER THAN 4"

NOTES:

1. ALL DEPTHS ARE MINIMUM COMPACTED DEPTHS.
2. SUBGRADE PREPARATION SHALL MEET THE REQUIREMENTS OF WSDOT STANDARD SPEC. 2-06.3(1). IT SHALL BE THE RESPONSIBILITY OF THE CONTRACTOR TO MEET THE COMPACTION REQUIREMENTS AND CONTROL ALL WORK. THE CITY OF PUYALLUP RESERVES THE RIGHT TO REQUIRE COMPLIANCE TESTS AT THE CONTRACTOR'S EXPENSE.
3. SUBBASE MATERIAL SHALL BE GRAVEL BORROW MEETING THE REQUIREMENTS OF WSDOT STANDARD SPEC. 9-03.14(1) OR CRUSHED BALLAST MEETING THE REQUIREMENTS OF WSDOT STANDARD SPEC. 9-03.9(1). CRUSHED SURFACING SHALL MEET THE GRADATION REQUIREMENTS OF WSDOT STANDARD SPEC. 9-03.9(3). THE SUBBASE AND BASE MATERIAL SHALL BE INSTALLED IN ACCORDANCE WITH WSDOT STANDARD SPEC. 4-04.
4. SOIL STABILIZATION FABRIC MAY BE REQUIRED BY THE DEVELOPMENT REVIEW ENGINEER TO BE INSTALLED PRIOR TO THE INSTALLATION OF THE BASE MATERIAL. WHEN REQUIRED, THE CONTRACTOR SHALL PLACE A GEOTEXTILE FABRIC OVER THE PREPARED SUBGRADE WITH A 2 FOOT MINIMUM OVERLAP. THE FABRIC SHALL BE INSTALLED PER MANUFACTURER SPECIFICATIONS.
5. ASPHALT CONCRETE PAVEMENT SHALL BE INSTALLED IN ACCORDANCE WITH WSDOT STANDARD SPEC. 5-04. DESIGN ENGINEER SHALL SUBMIT A STATE APPROVED HMA MIX FOR APPROVAL.
6. TEMPERATURE SHALL NOT EXCEED 325°F AT DISCHARGE OF THE PLANT NOR BE LESS THAN 185°F LEAVING THE SPREADER BOX.
7. THE MAXIMUM COMPACTED THICKNESS OF ANY SINGLE LIFT SHALL MEET WSDOT STANDARD SPEC. 5-04.3(9) TO A MINIMUM AVERAGE COMPACTED DRY DENSITY OF 91 PERCENT OF THE MAXIMUM DENSITY AS DETERMINED BY WSDOT TEST METHOD SPECIFIED IN STANDARD SPEC. 5-04.3(10)B. PERIODIC COMPLIANCE TESTS SHALL BE MADE BY A CERTIFIED TESTING AGENCY AT THE EXPENSE OF THE CONTRACTOR.
8. THE FACE OF THE GUTTER LIP AND EDGES OF EXISTING ASPHALT MEET LINES SHALL BE TACK COATED PRIOR TO PAVEMENT PLACEMENT. WHEN SUCCESSIVE LIFTS OF ASPHALT ARE REQUIRED, A TACK COAT SHALL BE DISTRIBUTED UNIFORMLY OVER THE PREVIOUS LIFT AT A RATE OF 0.06-0.08 GALLONS PER SQUARE YARD AT A TEMPERATURE OF 100°F AND SHALL BE ALLOWED TO SET TO A TACKY STATE PRIOR TO THE PLACEMENT OF THE NEXT LIFT.
9. ALL MEET LINES BETWEEN LIFTS OF ASPHALT SHALL BE UNIFORM AND VERTICAL. THE MEET LINES SHALL BE CLEANED AND TACK COATED.
10. ANY CHANGES TO THE STANDARD PAVEMENT SECTION SHALL REQUIRE APPROVAL BY THE DEVELOPMENT REVIEW ENGINEER. A STRUCTURAL PAVEMENT CROSS SECTION DESIGN WITH CALCULATIONS SHALL BE REQUIRED.
11. ALL MANHOLE FRAMES, VALVE FRAMES AND MONUMENT COVERS SHALL BE INSTALLED AFTER PLACEMENT OF ASPHALT. IF MORE THAN ONE LIFT IS NECESSARY, FRAMES AND LIDS WILL BE ADJUSTED TO FINISH GRADE AT FIRST LIFT AS DIRECTED BY THE CITY.
12. ADDITIONAL BIKE LANES AND/OR ON-STREET PARKING MAY BE REQUIRED PER TRAFFIC ENGINEER.
13. A UTILITY EASEMENT OF 10' SHALL BE PROVIDED ON BOTH SIDES OF THE ROADWAY.
*14. WHEN PLANTING STRIP IS 5' IN WIDTH OR LESS, STREET TREE PLANTER BOXES SHALL BE INSERTED AT LOCATIONS AS REQUIRED BY THE CITY (REFER TO CITY STANDARD DETAIL NO. 01.02.04).
15. PLANTING STRIP SHALL BE PLANTED AS DIRECTED BY CITY PLANNING DEPARTMENT.

CITY OF PUYALLUP
DEVELOPMENT ENGINEERING and PUBLIC WORKS DEPARTMENTS

36' PUBLIC ROADWAY COMMERCIAL COLLECTOR CROSS SECTION

DRAWN BY	CHECKED BY	APPROVED BY	REVISED BY	CITY STANDARD
JIM ERWIN-SVOBODA	LINDA LIAN	COLLEEN HARRIS	XXXX	01.01.04
FILE NAME: F:\DWG\COMMON\STDS\CITY\2009\01_STR\01.01\01.01.04		DATE APPROVED: 07/01/2009	DATE REVISED: XX/XX/XX	SCALE: 1:10

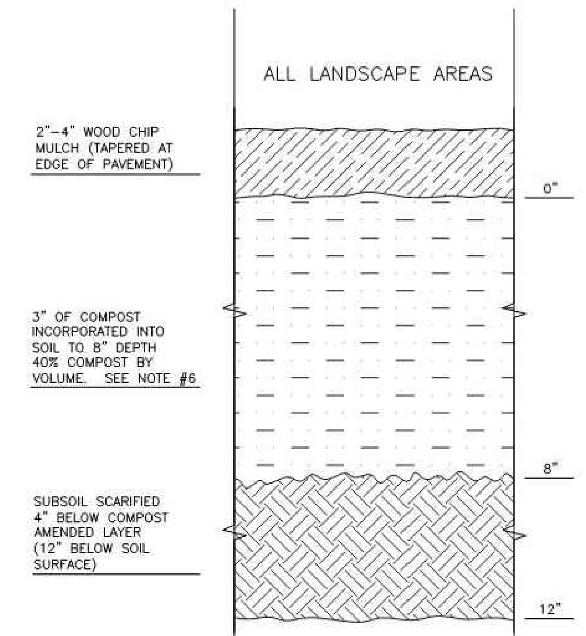

NOTES:

1. ALL SOIL AREAS DISTURBED OR COMPACTED DURING CONSTRUCTION, AND NOT COVERED BY BUILDINGS OR PAVEMENT, SHALL BE AMENDED WITH COMPOST AS DESCRIBED BELOW.
2. SUBSOIL SHOULD BE SCARIFIED (LOOSENED) 4 INCHES BELOW AMENDED LAYER, TO PRODUCE 12-INCH DEPTH OF UN-COMPACTED SOIL, EXCEPT WHERE SCARIFICATION WOULD DAMAGE TREE ROOTS OR AS DETERMINED BY THE ENGINEER. SEE NOTE BELOW REGARDING PLANTING STEPS FOR STREET TREES.
3. COMPOST SHALL BE TILLED IN TO 8 INCH DEPTH INTO EXISTING SOIL, OR PLACE 8 INCHES OF COMPOST-AMENDED SOIL, PER SOIL SPECIFICATION.
4. PLANTING BEDS SHALL RECEIVE 3 INCHES OF COMPOST TILLED IN TO 8-INCH DEPTH, OR MAY SUBSTITUTE 8" OF IMPORTED SOIL CONTAINING 35-40% COMPOST BY VOLUME. MULCH AFTER PLANTING, WITH 4 INCHES OF ARBORIST WOOD CHIP MULCH OR APPROVED EQUAL (6" OF LOOSE WOOD CHIPS AT THE TIME OF PLANTING TO ALLOW SETTLING TO 4").
5. SETBACKS: TO PREVENT UNEVEN SETTLING, DO NOT COMPOST-AMEND SOILS WITHIN 3 FEET OF UTILITY INFRASTRUCTURES (POLES, VAULTS, METERS ETC.). WITHIN ONE FOOT OF PAVEMENT EDGE, CURBS AND SIDEWALKS SOIL SHOULD BE COMPACTED TO APPROXIMATELY 95% PROCTOR TO ENSURE A FIRM SURFACE.
6. SEE SECTION 8.2(B) OF THE VMS FOR SOIL AMENDMENT AND INSTRUCTION PROCEDURES FOR STREET TREE PLANTER STRIPS. ALL STREET TREE PLANTER STRIPS SHALL RECEIVE 40% COMPOST AMENDED SOIL TO THE FULL DEPTH OF THE STREET TREE ROOTBALL.

CITY OF PUYALLUP
DEVELOPMENT ENGINEERING and PUBLIC WORKS DEPARTMENTS

SOIL AMENDMENT AND DEPTH

DRAWN BY	CHECKED BY	APPROVED BY	REVISED BY	CITY STANDARD
LINDA LIAN	CHRIS BEALE	COLLEEN HARRIS	XXXX	01.02.08a
FILE NAME: F:\DWG\COMMON\STDS\CITYSTDS\STR\01.02.08		DATE APPROVED: 08/01/2015	DATE REVISED: XX/XX/XX	SCALE: 1:1

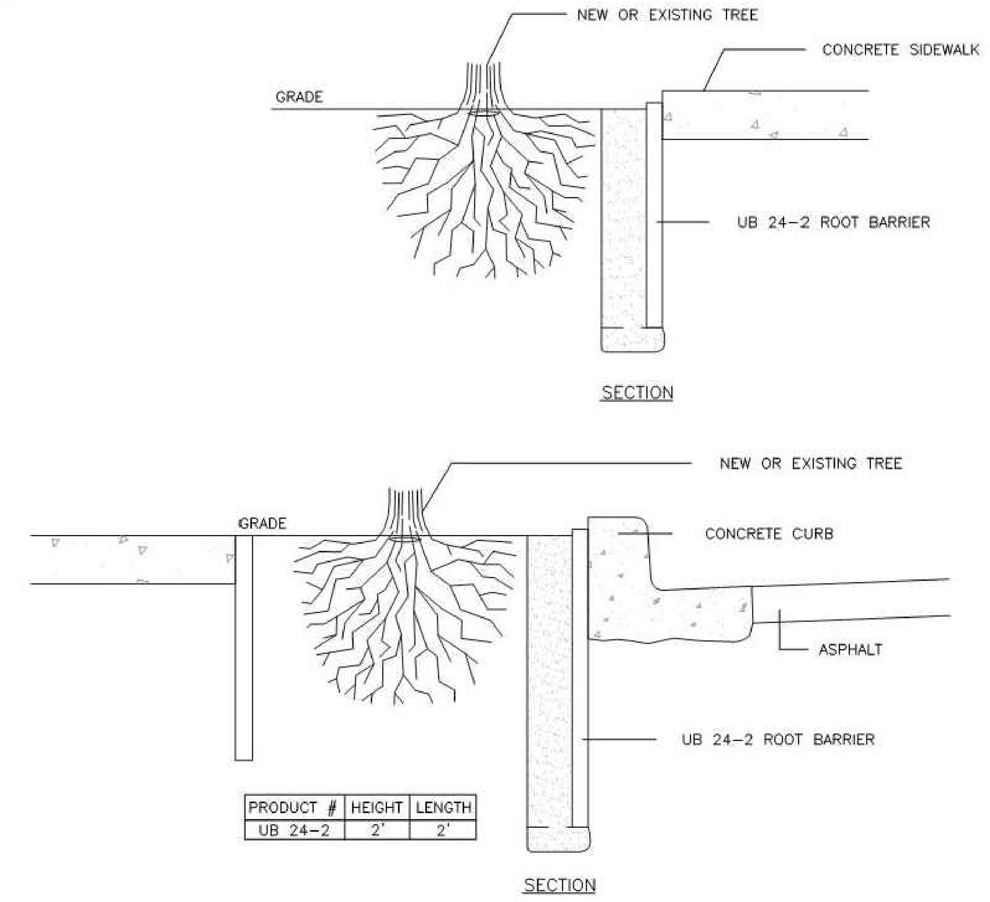

PRODUCT #	HEIGHT	LENGTH
UB 24-2	2'	2'

NOTES:

1. ROOT BARRIERS SHALL BE REQUIRED IN ALL STREET TREE PLANTING INSTALLATIONS WHETHER NEW OR EXISTING, WHEN STREET TREES ARE INSTALLED IN RIGHT-OF-WAY OR IN A PLANTING EASEMENT*.
2. ROOT BARRIERS USED SHALL BE DeepRoot ROOT BARRIERS OR EQUIVALENT.
3. UB - 24 SHALL BE USED
4. ROOT BARRIERS SHALL BE INSTALLED IF REQUIRED BY THE CITY.
5. INSTALLATION OF ROOT BARRIERS TO BE IN ACCORDANCE WITH THE MANUFACTURER'S SPECIFICATIONS.
6. THE PANEL SHALL BE INSTALLED SO THE VERTICAL RIBS FACE THE ROOTS OF THE TREE. A MINIMUM OF FOUR (4) PANELS SHALL BE INSTALLED ON EACH SIDE OF ROOT BALL FOR 8' OF PROTECTION.
7. FOR PRODUCT INFORMATION VISIT:
   http://www.deeproot.com/template.php?sec=products&nav=treeRoot&content=rb_app&sub=2&lsel=1

*"PLANTING EASEMENT" SHALL MEAN THAT PORTION OF LAND MADE AVAILABLE AS A PUBLIC EASEMENT FOR THE PURPOSE OF PLANTING AND MAINTAINING CITY STREET TREES. ALL STREET TREES PLANTED WITHIN A PLANTING EASEMENT SHALL BE PLANTED WITHIN THREE FEET OF RIGHT-OF-WAY.

CITY OF PUYALLUP
DEVELOPMENT ENGINEERING and PUBLIC WORKS DEPARTMENTS

ROOT BARRIER DETAIL

DRAWN BY	CHECKED BY	APPROVED BY	REVISED BY	CITY STANDARD
JIM ERWIN-SVOBODA	CHRIS BEALE	COLLEEN HARRIS	LINDA LIAN	01.02.03
FILE NAME: F:\DWG\COMMON\STDS\CITY\2009\01_STR\01.02\01.02.03		DATE APPROVED: 07/01/2009	DATE REVISED: 08/01/2015	SCALE: 1:1

NOTES:

1. PLANTING INCLUDES REMOVAL OF STAKES ONE YEAR AFTER INSTALLATION.
2. SHAPE SOIL SURFACE TO PROVIDE 4' DIA WATERING RING.
3. TREE CLEARANCE SHALL BE PER STD SECTION 01.01.11.
4. ADJUST TREE TIES DURING ESTABLISHMENT TO ALLOW ROOM FOR GROWTH (@1" SLACK).
5. ROOT BARRIER REQUIRED ALONG EDGE OF ROADWAY, CURB, DRIVEWAY, TRAIL, SIDEWALK, OR OTHER STRUCTURES WHERE ROOTBALL IS WITHIN FIVE FEET; PLACE VERTICAL ROOTBARRIER AS SHOWN IN STANDARD PLAN 01.02.03. INSTALL ROOT BARRIERS FOR NEWLY PLANTED TREES ONLY.
6. FOR CONTAINER GROWN TREES, CORRECT ALL CIRCLING/MATTED ROOTS BY LOOSENING ROOTS AND SPREADING THEM FLAT AND/OR MAKING CLEAN CUTS TO CIRCLED ROOT(S) PRIOR TO PLANTING TO ALLOW HORIZONTAL ROOT GROWTH. CONTAINERIZED TREES WITH HEAVY ROOT MATTING OR LARGE CIRCLING ROOTS SHALL BE REJECTED. ALL BARE ROOT TREES SHALL BE PLANTED WITH ROOTS FLAT AND HORIZONTAL IN THE PLANTING PIT (E.G. NOT CIRCLING THE PLANTING PIT WHEN PLANTED).
7. ALL DECIDUOUS STREET TREES SHALL BE INSTALLED WITH A 20 GALLON TEMPORARY IRRIGATION BAG (TREEGATOR PRO', OR EQUAL EQUIVALENT). FOR ALL EVERGREEN CONIFER TREES, A 15 GALLON TEMPORARY RING IRRIGATION BAG ('TREEGATOR JUNIOR PRO', OR EQUAL EQUIVALENT) SHALL BE USED. ALL TEMPORARY IRRICATION BAGS SHALL BE FILLED AT LEAST ONCE A WEEK FOR THE FIRST 2-3 YEARS AFTER PLANTING.

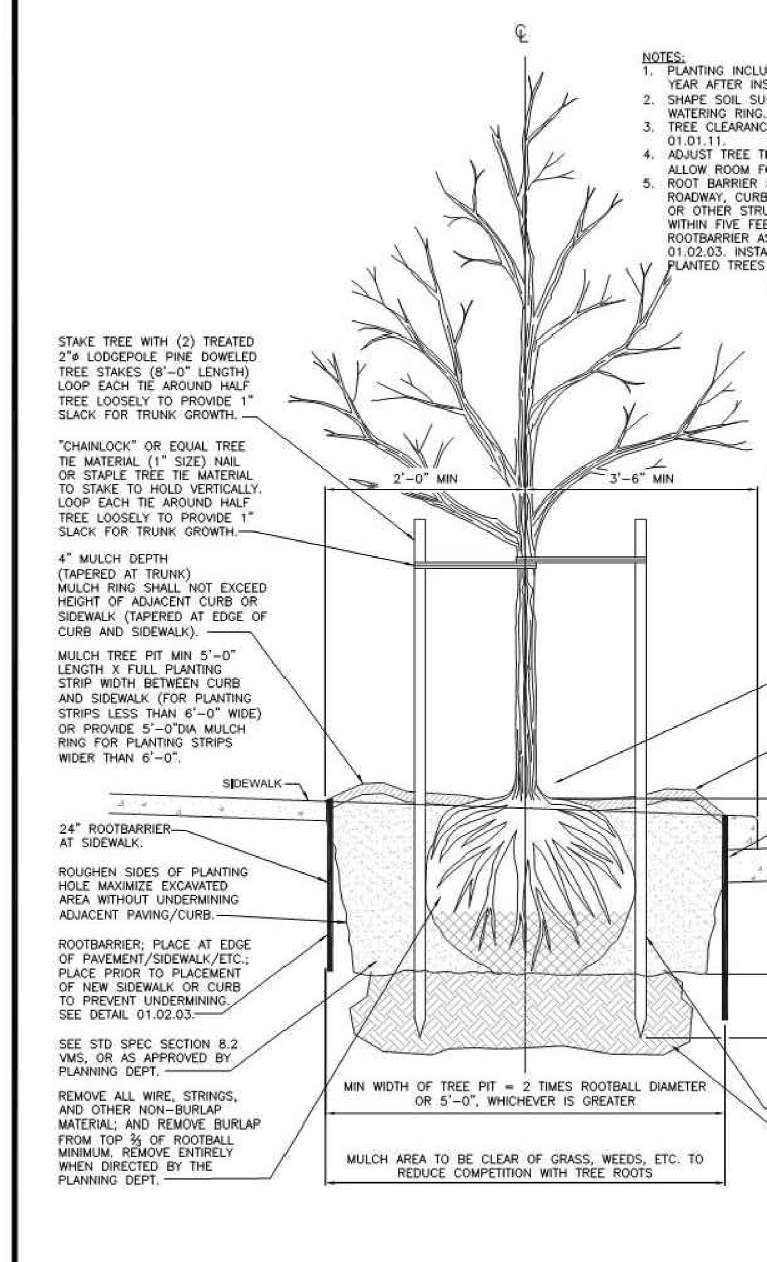

CITY OF PUYALLUP
DEVELOPMENT ENGINEERING and PUBLIC WORKS DEPARTMENTS

STREET TREE PLANTING IN PLANTING STRIP

DRAWN BY	CHECKED BY	APPROVED BY	REVISED BY	CITY STANDARD
LINDA LIAN	CHRIS BEALE	COLLEEN HARRIS	LINDA LIAN	01.02.07
FILE NAME: F:\DWG\COMMON\STDS\CITYSTDS\STR\01.02.07		DATE APPROVED: 08/01/2015	DATE REVISED: 08/01/2015	SCALE: 1:1

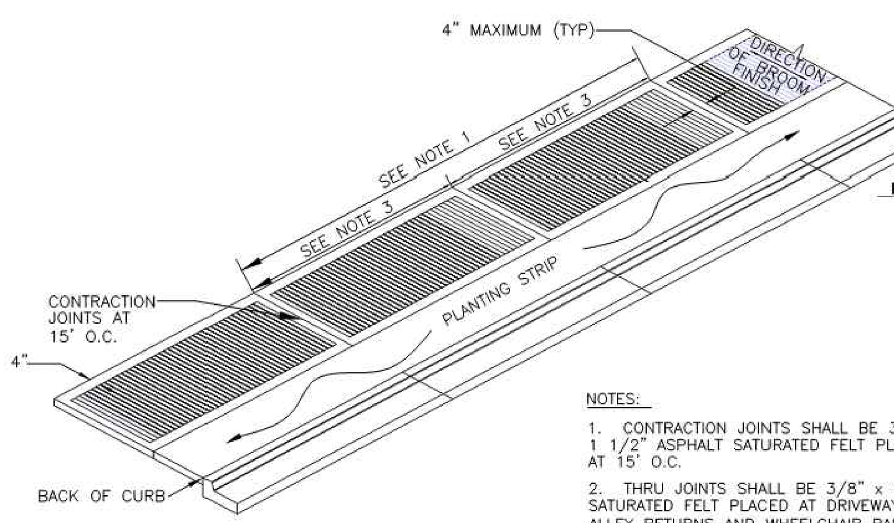

NOTES:

1. CONTRACTION JOINTS SHALL BE 3/8" x 1 1/2" ASPHALT SATURATED FELT PLACED AT 15' O.C.
2. THRU JOINTS SHALL BE 3/8" x 4" ASPHALT SATURATED FELT PLACED AT DRIVEWAYS, ALLEY RETURNS AND WHEELCHAIR RAMPS AND RADII.
3. V-GROOVEMARKS SHALL BE 1/8" DEEP AND 1/4" WIDE PLACED AT 5' O.C. FOR 5' SIDEWALKS AND 7.5' O.C. FOR 8' SIDEWALKS.
4. ALL JOINTS SHALL BE CLEAN AND EDGED TO A 1/4" RADIUS. JOINTS SHALL BE FLUSH WITH THE FINISHED SURFACE.
5. ALL UTILITY POLES AND STREET SIGN POSTS IN SIDEWALK AREA NOT REQUIRED TO BE RELOCATED SHALL HAVE A SQUARE SECTION OF CONCRETE SURROUNDED BY 3/8" EXPANSION JOINT MATERIAL AROUND THE POLE. THE JOINT SHALL BE NO CLOSER THAN 6" TO ANY SIDE OF THE POLE SIDE OF THE POLE.
6. FORMS SHALL BE EITHER WOOD OR STEEL AND SHALL MEET ALL REQUIREMENTS OF THESE SPECIFICATIONS.
7. CONCRETE SHALL BE CLASS 3000 COMMERCIAL CONCRETE, 5.5 SACK MINIMUM, AASHTO GRADING 467 COARSE AGGREGATE, NO FLY ASH.
8. SIDEWALK MINIMUM UNOBSTRUCTED CLEAR WIDTH SHALL BE 4', EXCLUSIVE OF THE WIDTH OF THE CURB.
9. GRATINGS, ACCESS COVERS, JUNCTION BOXES, CABLE VAULTS, PULL BOXES AND OTHER APPURTENANCES WITHIN THE SIDEWALK (RIGHT OF WAY) MUST HAVE SLIP RESISTANT SURFACES AND MATCH THE GRADE OF THE SIDEWALK.
10. CURB RAMPS SHALL BE CONSTRUCTED AT INTERSECTIONS USING A DESIGN PREPARED BY A LICENSED PROFESSIONAL ENGINEER. WHEN A RAMP DESIGN FAILS TO MEET ALL APPLICABLE DESIGN STANDARDS, THE ENGINEER SHALL DOCUMENT WHY THE PROPOSED RAMP ACHIEVES DESIGN STANDARDS TO THE MAXIMUM EXTENT FEASIBLE.

MINIMUM SIDEWALK WIDTHS

- 5'(RS ZONES) SINGLE FAMILY RESIDENTIAL AREAS (DETACHED DWELLINGS)
- 8'(RS ZONES) COMMERCIAL USES, WHEN REQUIRED BY DEVELOPMENT SERVICES MANAGER
- 8'(RM ZONES) MEDIUM AND HIGH DENSITY MULTI-FAMILY RESIDENTIAL AREAS
- 8'(ML ZONES) INDUSTRIAL AREAS
- 8'(CG, CBD ZONES) COMMERCIAL AREAS
- 8'(PF ZONES) PUBLIC FACILITIES AREAS
- 8'(F ZONES) FAIR AREAS
- * MATCH GREATEST WIDTH FOR ANY ADJACENT ZONE

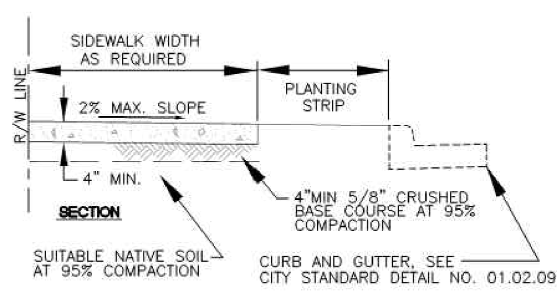

CITY OF PUYALLUP
DEVELOPMENT ENGINEERING and PUBLIC WORKS DEPARTMENTS

SIDEWALK WITH PLANTING STRIP

DRAWN BY	CHECKED BY	APPROVED BY	REVISED BY	CITY STANDARD
JIM ERWIN-SVOBODA	LINDA LIAN	COLLEEN HARRIS	LINDA LIAN	01.02.02
FILE NAME: F:\DWG\COMMON\STDS\CITY\2009\01_STR\01.02\01.02.02		DATE APPROVED: 07/01/2009	DATE REVISED: 03/21/11	SCALE: 1:8

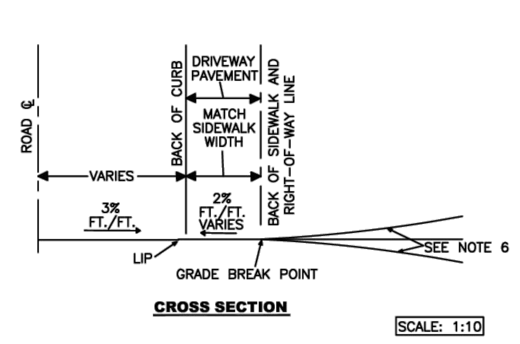

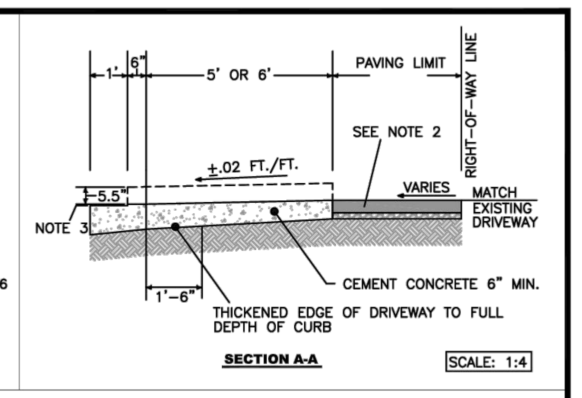

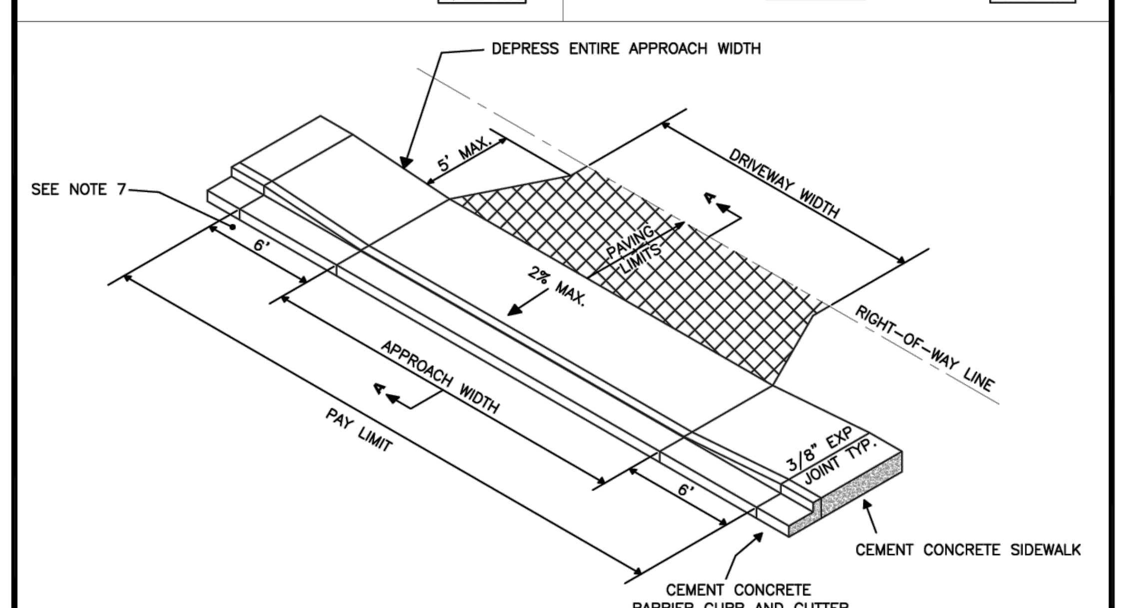

NOTES:

1) DRIVEWAY WIDTH = 15' MINIMUM TO 30' MAXIMUM. TOTAL APPROACH WIDTH SHALL NOT EXCEED 50% OF THE PROPERTY FRONTAGE.
2) DRIVEWAY PAVING = 6" MINIMUM CEMENT CONCRETE OR 2" MINIMUM COMPACTED DEPTH ASPHALT CONCRETE PAVEMENT CLASS B, OVER 2" MINIMUM DEPTH CRUSHED SURFACING TOP COURSE.
3) LIP HEIGHT 1/2", 1" FOR REVERSE GRADE APPROACHES.
4) STORM DRAINAGE FROM DRIVEWAY SHALL NOT BE PERMITTED TO DRAIN ONTO ROADWAY SURFACE, UNLESS ACCOUNTED FOR IN DESIGN.
5) DRIVEWAY SHALL NORMALLY BE AT 90 DEGREES TO ROAD CENTERLINE, BUT CAN VARY FROM 75 DEGREES TO 90 DEGREES.
6) RECOMMENDED MAXIMUM GRADES +/- 15% BEYOND GRADE BREAK POINT. VERTICAL CURVES NOT TO EXCEED 3.25" CREST OR A 1" SAG IN A 10' CHORD.
7) ADJUST THE RAMP LENGTHS TO MEET ADA REQUIREMENTS, 15' MAXIMUM LENGTH.
8) ENTERING SIGHT DISTANCE SHALL MEET AASHTO STANDARDS.

SCALE: 1:8

CITY OF PUYALLUP
DEVELOPMENT ENGINEERING and PUBLIC WORKS DEPARTMENTS

RESIDENTIAL DRIVEWAY ALTERNATE 1

DRAWN BY	CHECKED BY	APPROVED BY	REVISED BY	CITY STANDARD
JIM ERWIN-SVOBODA	LINDA LIAN	COLLEEN HARRIS	LINDA LIAN	01.02.13
FILE NAME: F:\DWG\COMMON\STDS\CITY\2009\01_STR\01.02\01.02.13		DATE APPROVED: 07/01/2009	DATE REVISED: 03/21/11	SCALE: VARIES

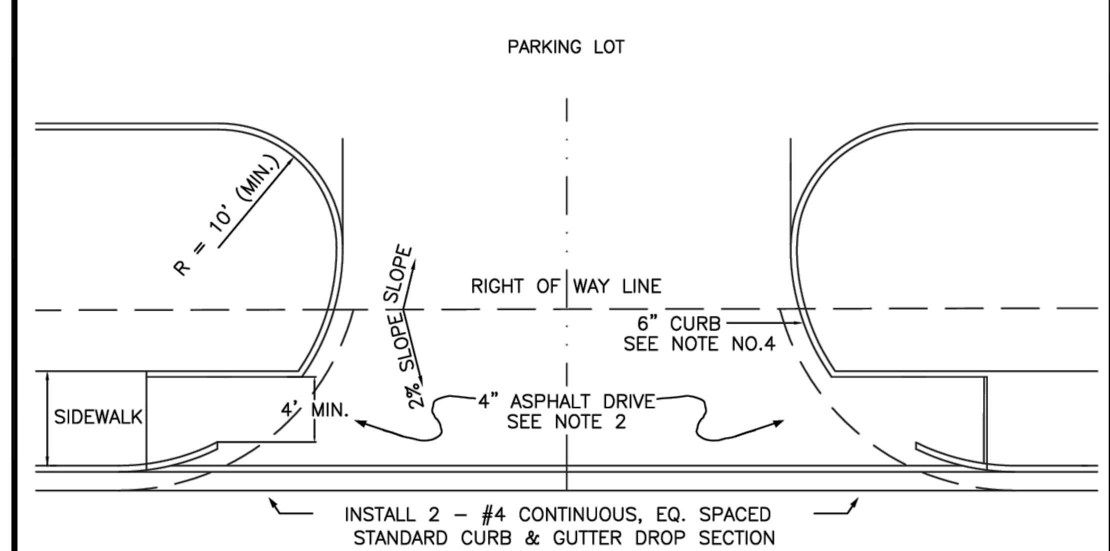

NOTES:

1. TYPICAL COMMERCIAL APPROACHES SHALL BE 30' WIDE AND INCLUDE 35' CURB RADII. IF TRUCKS ARE EXPECTED TO USE THE APPROACH, DRIVEWAY WIDTH, CHANNELIZATION, AND CURB RADII SHALL BE BASED ON AN APPROVED TURNING MOVEMENT ANALYSIS
2. ALL ASPHALT PAVEMENT MUST CONFORM TO CITY STANDARD NO. 01.01.01.
3. APPROACH SHALL BE ASPHALT WITH STANDARD CURB AND GUTTER PLACED ON EACH SIDE OF THE APPROACH.
4. WHEEL CHAIR RAMPS SHALL BE INSTALLED IN ACCORDANCE TO ALL APPLICABLE STANDARDS. DETECTABLE WARNING PATTERNS SHALLBE CONSTRUCTED AT A DRIVEWAY ONLY WHEN IT WILL BE SIGNALIZED. CURB RAMP SLOPE SHALL NOT EXCEED 8.3%, AS MEASURE BY A SMART LEVEL, UNLESS RAMP LENGTH IS EXTENDED TO 15'. SEE DETAIL 01.02.19 FOR ADDITIONAL ADA RAMP INFORMATION.
5. SPACING OF COMMERCIAL APPROACHES ON PRINCIPAL AND MINOR ARTERIALS SHALL BE MINIMUM 300' AND SPACING ON COLLECTORS SHALL BE MINIMUM 150', MEASURED BETWEEN THE CLOSEST EDGES OF EACH DRIVEWAY. THIS REQUIREMENT IS ALSO APPLICABLE TO THE DRIVEWAYS THAT ARE ACROSS THE STREET.
6. SPACING OF COMMERCIAL APPROACHES FROM PRINCIPAL AND MINOR ARTERIALS SHALL BE MINIMUM 300' AND SPACING FROM A COLLECTOR SHALL BE MINIMUM 150', MEASURED FROM NEAREST ROW LINE TO APPROACH PAVEMENT EDGE. THE CITY MAY BE MORE RESTRICTIVE THAN SPECIFIED HEREIN IF DEEMED NECESSARY BASED ON TRAFFIC VOLUMES, CHANNELIZATION AND SIGNALIZATION.
7. THIS COMMERCIAL APPROACH STANDARD SHALL BE USED ON ARTERIALS AND COLLECTORS WITH SPEED LIMITS OF 35 MPH OR GREATER, AND/OR WHEN TRUCK TRAFFIC WILL BE USING THE APPROACH.

CITY OF PUYALLUP
DEVELOPMENT ENGINEERING and PUBLIC WORKS DEPARTMENTS

STANDARD COMMERCIAL APPROACH

DRAWN BY	CHECKED BY	APPROVED BY	REVISED BY	CITY STANDARD
JIM ERWIN-SVOBODA	LINDA LIAN	COLLEEN HARRIS	LINDA LIAN	01.02.16
FILE NAME: F:\DWG\COMMON\STDS\CITY\2009\01_STR\01.02\01.02.16		DATE APPROVED: 07/01/2009	DATE REVISED: 02/19/14	SCALE: 1" = 20'

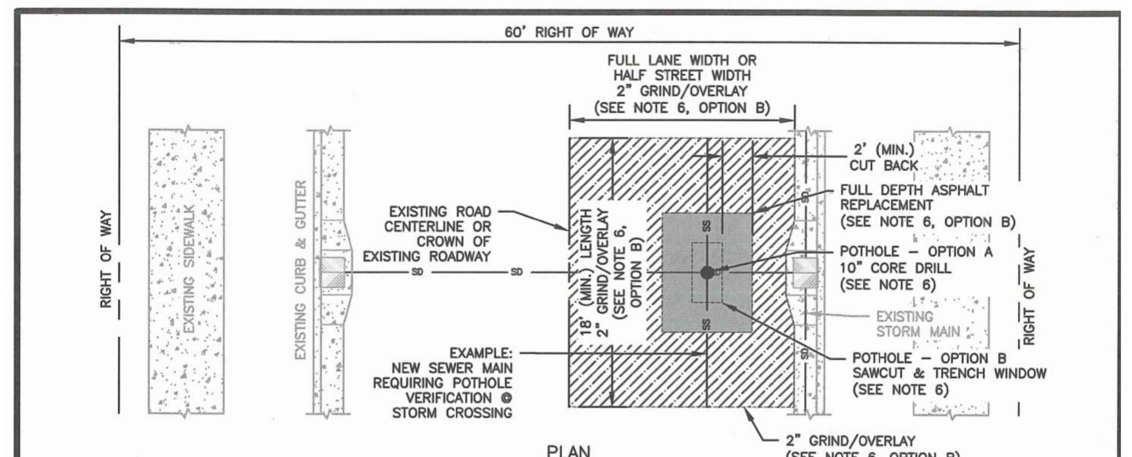

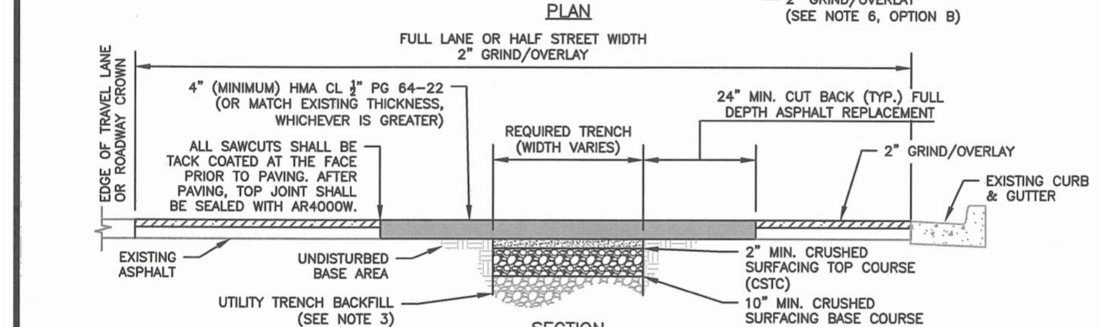

NOTES:

1. BASE AND SUBBASE MATERIAL SHALL BE COMPACTED TO 95% OF THE MODIFIED PROCTOR MAXIMUM DRY DENSITY.
2. ALL DEPTHS INDICATED ARE A MINIMUM COMPACTED DEPTH.
3. INITIAL BACKFILLING SHALL BE PERFORMED ONLY AFTER INSPECTION AND APPROVAL OF THE INSTALLED PIPE OR STRUCTURE. THE TRENCH BACKFILL MATERIAL SHALL BE IN ACCORDANCE WITH CITY STANDARD DETAIL NO. 06.01.01.
4. ALL BACKFILL FOR PIPE TRENCHES SHALL BE MECHANICALLY COMPACTED BY A POWER-OPERATED MECHANICAL TAMPER(S) AS SPECIFIED IN WSDOT STANDARD SPEC. 2-03.3 (14)C, COMPACTING EARTH EMBANKMENTS, METHOD C OF THE WSDOT STANDARD SPECIFICATIONS.
5. IF PAVING SURFACES ADJACENT TO THE TRENCH OPENING MAY BE DAMAGED WHERE TRENCHES ARE MADE PARALLEL TO THE STREET, OR WHERE A NUMBER OF CROSS TRENCHES ARE LAID IN CLOSE PROXIMITY TO ONE ANOTHER OR WHERE THE EQUIPMENT USED MAY CAUSE SUCH DAMAGE, THE CITY ENGINEER MAY REQUIRE A NEGOTIATED CONTRIBUTION FROM THE PERMITTEE FOR RESURFACING IN LIEU OF PATCHING.

   IF THE TOTAL AREA OF THE PROPOSED PATCH OR PROBABLE DAMAGED AREA EXCEEDS 25 PERCENT OF THE TOTAL PAVEMENT SURFACING BETWEEN CURB FACES OR BETWEEN CONCRETE GUTTER EDGES IN ANY BLOCK, SUCH NEGOTIATIONS SHALL BE CARRIED ON AND CONTRIBUTIONS AGREED UPON PRIOR TO ISSUANCE OF A PERMIT. SUCH CONTRIBUTIONS SHALL BE IN ADDITION TO THE STANDARD PERMIT FEE.
6. POTHOLING FOR UTILITIES:

   OPTION A - UP TO A 10" DIAMETER CORE DRILL IS ALLOWED. CORE HOLES MADE DURING UTILITY POTHOLES SHALL BE BACKFILLED WITH CDF TO WITHIN 4" OF FINISHED GRADE. 4" OF HMA SHALL THEN BE PLACED AND COMPACTED, FLUSH WITH EXISTING GRADE.

   OPTION B - FOR POTHOLE WINDOWS LARGER THAN 10" IN DIAMETER OR TRENCHING COMPLETED IN EXISTING ROADWAY, THE CONTRACTOR SHALL MEET CITY STANDARD 06.01.01 FOR PIPE BEDDING AND BACKFILL REQUIREMENTS. PAVEMENT RESTORATION SHALL BE ACCOMPLISHED BY INSTALLING THE TRENCH PATCH, AS SHOWN HEREIN, AND THEN GRINDING/OVERLAYING TO A MINIMUM DEPTH OF 2". THE LIMITS OF THE REQUIRED GRIND/OVERLAY SHALL BE TO THE NEAREST LANE LINE, OR HALF STREET, AND SHALL BE A MINIMUM OF 18 FEET LONG (LONGITUDINALLY ALONG ROADWAY) CENTERED AT LOCATION OF PATCH. NOTE: IF EXISTING ASPHALT THICKNESS IS LESS THAN 3", FULL DEPTH PAVEMENT REPLACEMENT, IN LIEU OF GRIND/OVERLAY, TO MEET A MINIMUM ASPHALT THICKNESS OF 4" WILL BE REQUIRED.

   WHERE LOCATION OF TRENCH OR POTHOLE WINDOW INTERSECTS ROAD CENTERLINE, A MINIMUM GRIND AND OVERLAY OF ONE FULL LANE WIDTH (12') IS REQUIRED CENTERED ON ROADWAY. NO LONGITUDINAL JOINTS WILL BE ALLOWED IN THE WHEEL PATH.
7. ALL MANHOLE FRAMES, VALVE FRAMES AND MONUMENT COVERS SHALL BE INSTALLED AFTER PLACEMENT OF ASPHALT. IF MORE THAN ONE LIFT IS NECESSARY, FRAMES AND LIDS WILL BE ADJUSTED TO FINISH GRADE AT FIRST LIFT AS DIRECTED BY THE CITY.

CITY OF PUYALLUP
OFFICE of THE CITY ENGINEER

APPROVED FOR PUBLICATION
HANS P. HUNGER, STATE OF WASHINGTON, REGISTERED PROFESSIONAL ENGINEER
DATE SEALED: 3/15/18

STREET PATCH

(NOT TO SCALE)
CITY STANDARD 01.01.20
FILE NAME: F:\DRAWINGS\COMMON\STANDARDS\CITY STANDARDS\2018\02 - PART 2 - STANDARD DETAILS\CAD\100\01.01

APPROVED

BY ____________________
CITY OF PUYALLUP
DEVELOPMENT ENGINEERING

DATE ____________________

NOTE: THIS APPROVAL IS VOID AFTER 180 DAYS FROM APPROVAL DATE.
THE CITY WILL NOT BE RESPONSIBLE FOR ERRORS AND/OR OMISSIONS ON THESE PLANS.
FIELD CONDITIONS MAY DICTATE CHANGES TO THESE PLANS AS DETERMINED BY THE DEVELOPMENT ENGINEERING MANAGER.

No.	Date	By	Ckd.	Appr.	Revision
3	10/03/24	DL	DL	JSG	RESPONSE TO CITY COMMENTS, DATED APRIL 12, 2024
2	03/05/24	DL	DL	JSG	RESPONSE TO CITY COMMENTS, DATED FEBRUARY 06, 2024

Title: CONSTRUCTION DETAILS
FORTRESS - PUYALLUP

For: CREF3 PUYALLUP OWNER LLC
11611 SAN VICENTE BLVD
10TH FLOOR
LOS ANGELES, CA 90049

JASON GUY HUBBELL, STATE OF WASHINGTON, 38950, REGISTERED PROFESSIONAL ENGINEER
10/03/2024

Scale: Horizontal NA; Vertical N/A

Designed DL
Drawn RDC
Checked DL
Approved JGH
Date 6/23/23

Barghausen Consulting Engineers, Inc.
18215 72nd Avenue South
Kent, WA 98032
425.251.6222
barghausen.com

Job Number 22085
Sheet C28 of 34

P:\22000s\22085\engineering\22085-D.dwg 4/29/2024 12:37 PM RCOX

CONSTRUCTION DETAILS

3

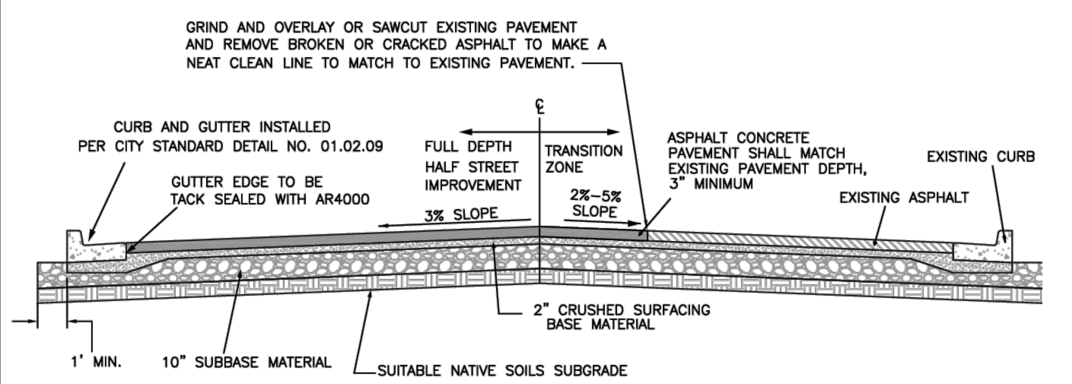

NOTES:

1. ALL DEPTHS ARE MINIMUM COMPACTED DEPTHS.
2. SUBGRADE PREPARATION SHALL MEET THE REQUIREMENTS OF WSDOT STANDARD SPEC. 2–06.3(1). IT SHALL BE THE RESPONSIBILITY OF THE CONTRACTOR TO MEET THE COMPACTION REQUIREMENTS AND CONTROL ALL WORK. THE CITY OF PUYALLUP RESERVES THE RIGHT TO REQUIRE TESTS AT THE CONTRACTOR'S EXPENSE.
3. SUBBASE MATERIAL SHALL BE GRAVEL BORROW MEETING THE REQUIREMENTS OF WSDOT STANDARD SPEC. 9–03.14(1) OR CRUSHED BALLAST MEETING THE REQUIREMENTS OF WSDOT STANDARD SPEC. 9–03.9(1). CRUSHED SURFACING SHALL MEET THE GRADATION REQUIREMENTS OF WSDOT STANDARD SPEC. 9–03.9(3). THE SUBBASE AND BASE MATERIAL SHALL BE INSTALLED IN ACCORDANCE WITH WSDOT STANDARD SPEC. 4–04.
4. SOIL STABILIZATION FABRIC MAY BE REQUIRED BY THE DEVELOPMENT REVIEW ENGINEER TO BE INSTALLED PRIOR TO THE INSTALLATION OF THE BASE MATERIAL. WHEN REQUIRED, THE CONTRACTOR SHALL PLACE A GEOTEXTILE FABRIC OVER THE PREPARED SUBGRADE WITH A TWO FOOT MINIMUM OVERLAP. THE FABRIC SHALL BE INSTALLED PER MANUFACTURER SPECIFICATIONS.
5. ASPHALT CONCRETE PAVEMENT SHALL BE INSTALLED IN ACCORDANCE WITH WSDOT STANDARD SPEC 5–04. DESIGN ENGINEER SHALL SUBMIT A STATE APPROVED HMA MIX FOR APPROVAL.
6. TEMPERATURE SHALL NOT EXCEED 325°F AT DISCHARGE OF THE PLANT NOR BE LESS THAN 185°F LEAVING THE SPREADER BOX.
7. THE MAXIMUM COMPACTED THICKNESS OF ANY SINGLE LIFT SHALL MEET WSDOT STANDARD SPEC. 5–04.3(9) TO A MINIMUM AVERAGE COMPACTED DRY DENSITY OF 91 PERCENT OF THE MAXIMUM DENSITY AS DETERMINED BY WSDOT TEST METHOD SPECIFIED IN STANDARD SPEC. 5–04.3(10)B. PERIODIC COMPLIANCE TESTS SHALL BE MADE BY A CERTIFIED TESTING AGENCY AT THE EXPENSE OF THE CONTRACTOR.
8. THE FACE OF THE GUTTER LIP AND EDGES OF EXISTING ASPHALT MEET LINES SHALL BE TACK COATED PRIOR TO PAVEMENT PLACEMENT. WHEN SUCCESSIVE LIFTS OF ASPHALT ARE REQUIRED, A TACK COAT SHALL BE DISTRIBUTED UNIFORMLY OVER THE PREVIOUS LIFT AT A RATE OF 0.06–0.08 GALLONS PER SQUARE YARD AT A TEMPERATURE OF 100°F AND SHALL BE ALLOWED TO SET TO A TACKY STATE PRIOR TO THE PLACEMENT OF THE NEXT LIFT.
9. ALL MEET LINES BETWEEN LIFTS OF ASPHALT SHALL BE UNIFORM AND VERTICAL. THE MEET LINES SHALL BE CLEANED AND TACK COATED.
10. ANY CHANGES TO THE STANDARD PAVEMENT SECTION SHALL REQUIRE APPROVAL BY THE DEVELOPMENT REVIEW ENGINEER. A STRUCTURAL PAVEMENT CROSS SECTION DESIGN WITH CALCULATIONS SHALL BE REQUIRED.
11. ALL MANHOLE FRAMES, VALVE FRAMES AND MONUMENT COVERS SHALL BE INSTALLED AFTER PLACEMENT OF ASPHALT. IF MORE THAN ONE LIFT IS NECESSARY, FRAMES AND LIDS WILL BE ADJUSTED TO FINISH GRADE AT FIRST LIFT AS DIRECTED BY THE CITY.
12. ASPHALT SHALL BE HMA CL 1/2" PG 64–22

CITY OF PUYALLUP
DEVELOPMENT ENGINEERING and PUBLIC WORKS DEPARTMENTS

HALF STREET IMPROVEMENT

DRAWN BY	CHECKED BY	APPROVED BY	REVISED BY		CITY STANDARD
JIM ERWIN-SVOBODA	LINDA LIAN	COLLEEN HARRIS	XXXX		01.01.19
FILE NAME F:\DWG\COMMON\STDS\CITY\2009\01_STR\01.01\01.01.19		DATE APPROVED 07/01/2009	DATE REVISED XX/XX/XX	SCALE 1:5	

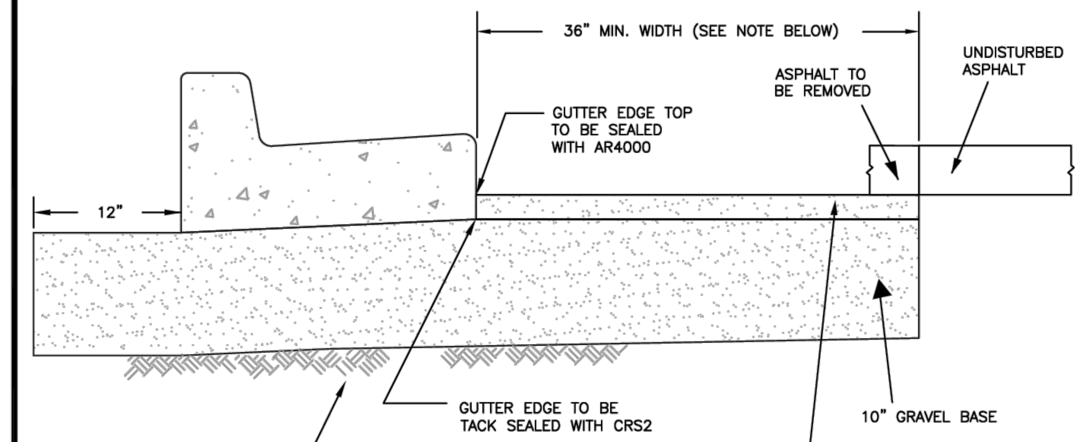

NOTE: THE 36" MINIMUM PAVEMENT PATCH SHALL BE INCREASED IN WIDTH IF THE RESULTING MEET LINE WOULD LIE WITHIN A LANE WHEEL PATH.

SCALE: 1:1

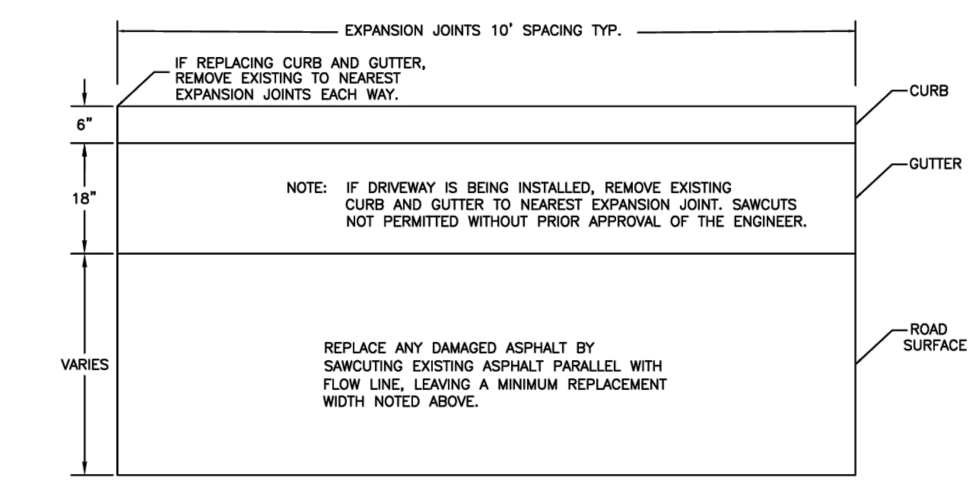

PLAN VIEW

SCALE: 1:2

CITY OF PUYALLUP
DEVELOPMENT ENGINEERING and PUBLIC WORKS DEPARTMENTS

CURB CUT

DRAWN BY	CHECKED BY	APPROVED BY	REVISED BY		CITY STANDARD
JIM ERWIN-SVOBODA	LINDA LIAN	COLLEEN HARRIS	XXXX		01.02.10
FILE NAME F:\DWG\COMMON\STDS\CITY\2009\01_STR\01.02\01.02.10		DATE APPROVED 07/01/2009	DATE REVISED XX/XX/XX	SCALE VARIES	

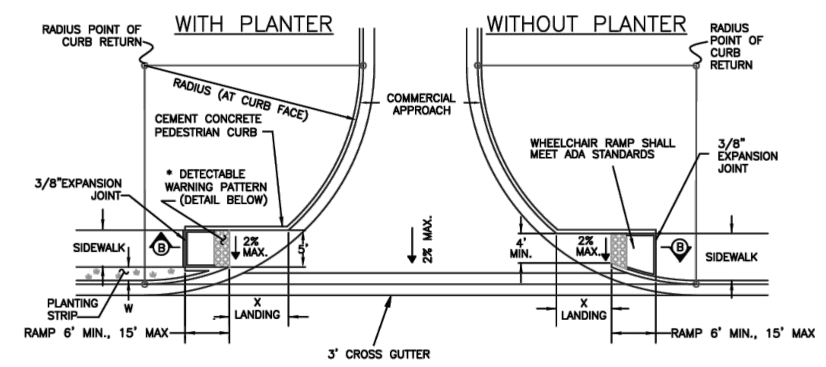

GEOMETRICS TABLE

RADIUS (AT CURB FACE)	W = 3' - 0" X	W = 4' - 0" X	W = 5' - 0" X	W = 6' - 0" X
25 FEET	6'-3 1/3"	5'-7 1/4"	4'-11 1/8"	4'-4 3/4"
30 FEET	7'-3 3/4"	6'-5 1/2"	5'-9 1/4"	5'-2 1/2"
35 FEET	8'-1 1/3"	7'-1 3/4"	6'-5 1/8"	5'-10 1/8"
40 FEET	8'-9 1/2"	7'-10"	7'-1"	6'-5 3/4"
50 FEET	10'-3/4"	9'-1/4"	8'-2 1/2"	7'-6 1/2"

X = LANDING

CURB GRADE	PROWAG UP-HILL RAMP LENGTH	PROWAG RAMP SLOPE
0.5%	6'-5"	8.3%
1.5%	7'-6"	8.3%
3%	9'-5"	8.3%
5%	15'	8.3%
7%	15'	10.3%
9%	15'	12.3%

NOTES:

1. AVOID PLACING DRAINAGE STRUCTURES OR OTHER OBSTRUCTIONS IN RAMP AND CROSSING AREA.
2. DETECTABLE WARNING PATTERNS MAY BE CREATED BY ANY METHOD THAT WILL ACHIEVE THE TRUNCATED DOME DIMENSIONS AND SPACING SHOWN. THE DETECTABLE WARNING PATTERN AREA SHALL BE YELLOW, AND MATCH THE COLOR OF "FEDERAL STANDARD 595, COLOR NUMBER 33538.
3. FOR SIDEWALK EXPANSION JOINT LOCATIONS AND ADDITIONAL INFORMATION, SEE CITY STANDARD DETAIL NO. 01.02.01 & 01.02.02.
4. CURB RAMP SLOPE SHALL NOT EXCEED 8.3%, AS MEASURED BY A SMART LEVEL, UNLESS RAMP LENGTH IS EXTENDED TO 15'.

SCALE: 1"=20'

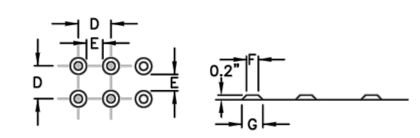

	MIN.	MAX.
D	1.6"	2.4"
E	0.65"	–
F	50% OF E	65% OF E
G	0.9"	1.4"

SCALE: 1:2

DETECTABLE WARNING PATTERN DETAIL

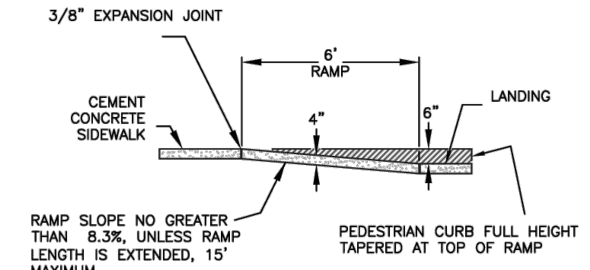

SECTION B

SCALE: 1"=5'

CITY OF PUYALLUP
DEVELOPMENT ENGINEERING and PUBLIC WORKS DEPARTMENTS

SIDEWALK RAMP WITH COMMERCIAL APPROACHES

DRAWN BY	CHECKED BY	APPROVED BY	REVISED BY		CITY STANDARD
JIM ERWIN-SVOBODA	LINDA LIAN	COLLEEN HARRIS	LINDA LIAN		01.02.19
FILE NAME F:\DWG\COMMON\STDS\CITY\2009\01_STR\01.02\01.02.19		DATE APPROVED 07/01/2009	DATE REVISED 08/09/12	SCALE VARIES	

3

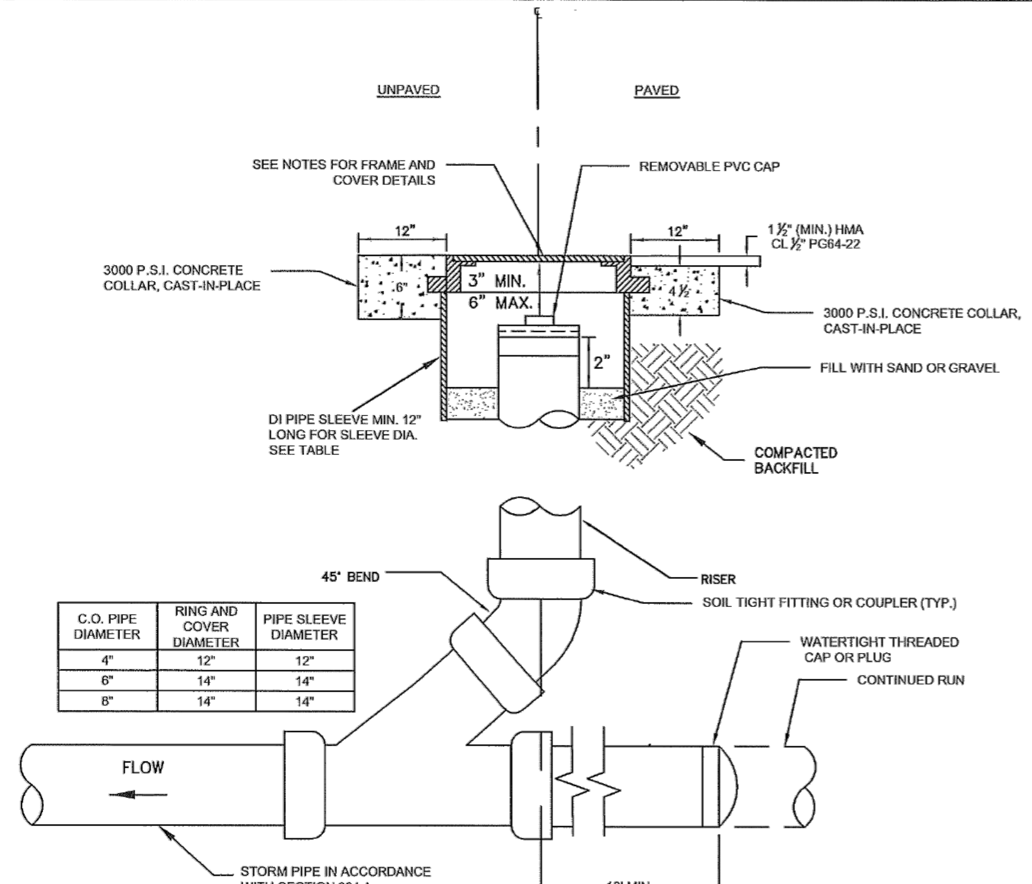

C.O. PIPE DIAMETER	RING AND COVER DIAMETER	PIPE SLEEVE DIAMETER
4"	12"	12"
6"	14"	14"
8"	14"	14"

NOTES:

1. CAST IRON COVER MARKED "FDCO" FOR FOOTING DRAINS OR "SDCO" FOR STORM LINES.
2. CAST IRON FRAME AND COVER SHALL BE DRILLED AND TAPPED WITH ⅝"-11 NC STAINLESS STEEL TYPE 304 ALLEN HEAD BOLTS, 2" LONG.
3. BOLT-LOCKING CAST IRON FRAME AND COVER SHALL BE HS-20 RATED IF USED IN RIGHT-OF-WAY OR EASEMENTS.
4. 14" BOLT-LOCKING CAST IRON FRAME AND COVER SHALL BE EQUAL TO OLYMPIC FOUNDRY PART # M1060.
5. CAST IRON FRAME AND COVER SHALL BE FLUSH WITH FINISHED GRADE.
6. CLEANOUTS REQUIRED FOR EACH PIPE LENGTH GREATER THAN 100' AND FOR EACH 90 DEGREE BEND.
7. STORM PIPE BEDDING AND BACKFILL SHALL CONFORM TO STD DETAIL 06.01.01.
8. FINAL JOINTS SHALL BE SAW CUT, FACE OF CUT TACKED AND ALL JOINTS SEALED WITH SEALANT (AR4000W).
9. STORM DRAIN STUB SHALL EXTEND 10' BEYOND THE PROPERTY LINE OR EASEMENT LINE TO PREVENT DAMAGE AND MINIMIZE CONFLICT WITH FUTURE UTILITIES.
10. EACH CLEANOUT ASSEMBLY SHALL CONSIST OF: ONE CLEANOUT ADAPTOR, (HUB x FEMALE INSIDE PIPE THREAD, PVC SLIP IN), AND ONE CLEANOUT PLUG (MALE OUTSIDE THREAD WITH RAISED NUT, PVC).
11. FOR LANDSCAPED AREAS (OUTSIDE OF CITY ROW, EASEMENTS AND FACILITIES) A GREEN "CARSON" MODEL 910 YARD BOX MAY BE USED FOR C.O. PIPE DIA. LESS THAN OR EQUAL TO 6". YARD BOX SHALL BE FASTENED WITH ⅜" HEX BOLTS, THE COVER MARKED "STORM" AND FLUSH WITH FINISHED GRADE.

CITY OF PUYALLUP
PUBLIC WORKS AND DEVELOPMENT ENGINEERING

APPROVED FOR PUBLICATION
HANS P. HUNGER, STATE OF WASHINGTON, 33750, REGISTERED PROFESSIONAL ENGINEER
DATE SEALED: 2/28/23

STORM DRAIN CLEANOUT

SCALE: NTS	DATE REVISED: 01/06/2023	CITY STANDARD
FILE NAME: Y:\Shared\Drawings\City Standards\2018\02 - PART 2 - STANDARD DETAILS\CAD\200\02.01.09		02.01.09

SIDE SEWER CONNECTION

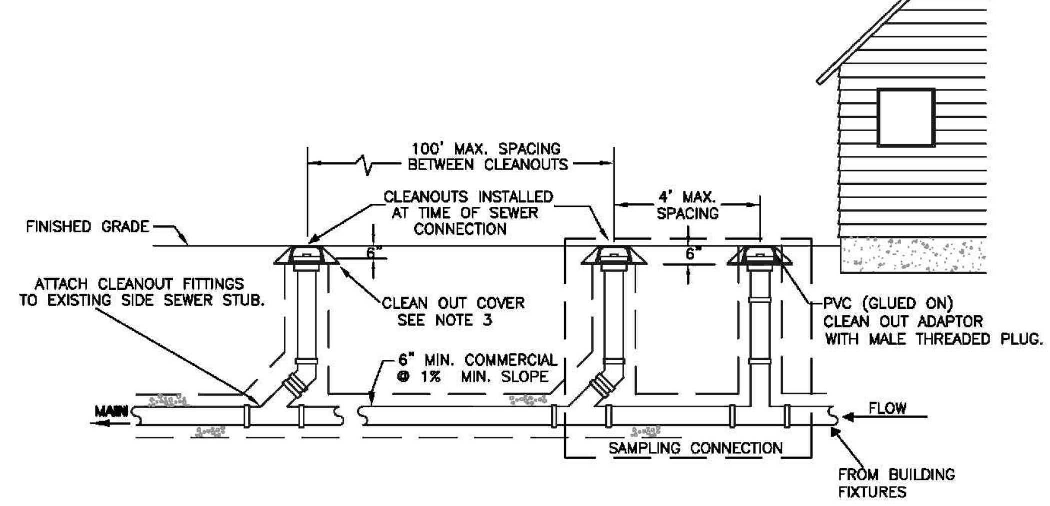

NOTES:

1. SAMPLING CONNECTION SHALL BE INSTALLED OUT SIDE WITH UNOBSTRUCTED ACCESS AT ALL TIMES.
2. A SAMPLING CONNECTION SHALL BE INSTALLED FOR EACH COMMERCIAL / RETAIL UNIT OR SPACE.
3. CLEAN OUT AND SAMPLING CONNECTION COVERS:
   A) FOR NON–VEHICULAR TRAFFIC INSTALLATIONS USE "CARSON" MODEL 910 GREEN YARD BOX WITH BOLT DOWN LID MARKED SEWER OR APPROVED EQUAL.
   B) FOR ASPHALT, GRAVEL, OR TRAFFIC INSTALLATIONS SEE CITY STANDARD DETAIL NO. 04.03.05 FRAME AND COVER SECTION.
4. EACH CLEANOUT ASSEMBLY SHALL CONSIST OF: ONE CLEANOUT ADAPTER, HUB x FEMALE, FIPT, PVC SI AND ONE CLEANOUT PLUG, MOPT WITH RAISED NUT, PVC SDR35.

CITY OF PUYALLUP
DEVELOPMENT ENGINEERING and PUBLIC WORKS DEPARTMENTS

COMMERCIAL SIDE SEWER CONNECTION WITH SAMPLING CONNECTION

DRAWN BY	CHECKED BY	APPROVED BY	REVISED BY		CITY STANDARD
JIM ERWIN-SVOBODA	LINDA LIAN	COLLEEN HARRIS	LINDA LIAN		04.03.04
FILE NAME F:\DWG\COMMON\STDS\CITY\2009\04_SS\04.03\04.03.04		DATE APPROVED 07/01/2009	DATE REVISED 03/21/11	SCALE 1:4	

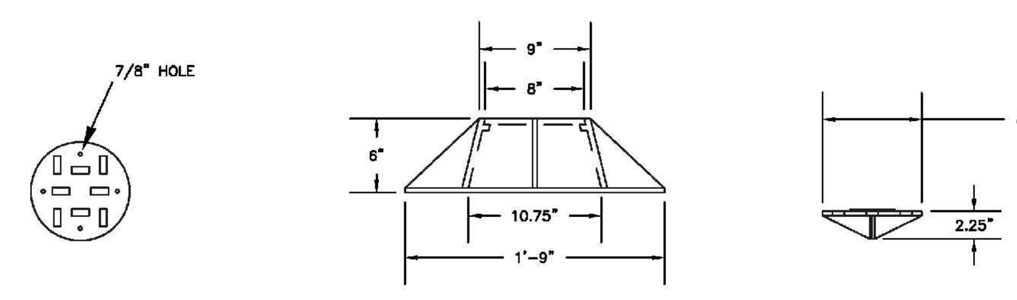

FRAME AND COVER SECTION

SCALE 1:1

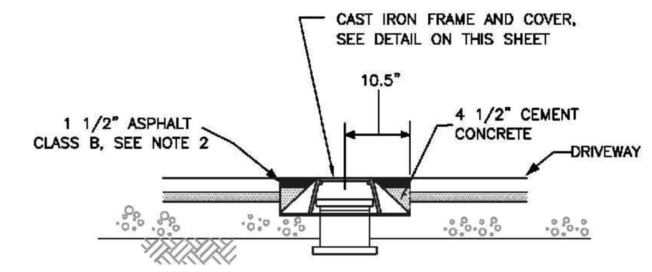

NOTES

1. NEAT LINE CUT SHALL BE SEALED AT THE TOP WITH A HOT PAVING GRADE ASPHALT AND FACE OF CUT TACKED.
2. ALL MATERIAL SHALL CONFORM TO THE 1991 STANDARD SPECIFICATIONS FOR ROAD, BRIDGE, AND MUNICIPAL CONSTRUCTION PREPARED BY THE WASHINGTON STATE DEPARTMENT OF TRANSPORTATION AND AMERICAN PUBLIC WORKS ASSOCIATION, WASHINGTON STATE CHAPTER.
3. MACHINE BEARING FACES OF FRAME AND COVER TO INSURE POSITIVE FIT.
4. EACH CLEAN OUT ASSEMBLY SHALL CONSIST OF: ONE CLEAN OUT ADAPTOR (HUB X FEMALE INSIDE PIPE THREAD, P.V.C. SLIP IN), AND ONE CLEAN OUT PLUG (MALE OUTSIDE PIPE THREAD WITH RAISED NUT, P.V.C. SDR35).

SCALE 1:2

CITY OF PUYALLUP
DEVELOPMENT ENGINEERING and PUBLIC WORKS DEPARTMENTS

SIDE SEWER CLEAN OUT WHEN PLACED IN DRIVEWAY

DRAWN BY	CHECKED BY	APPROVED BY	REVISED BY		CITY STANDARD
JIM ERWIN-SVOBODA	LINDA LIAN	COLLEEN HARRIS	XXXX		04.03.05
FILE NAME F:\DWG\COMMON\STDS\CITY\2009\04_SS\04.03\04.03.05		DATE APPROVED 07/01/2009	DATE REVISED XX/XX/XX	SCALE	

APPROVED

BY ______________
CITY OF PUYALLUP
DEVELOPMENT ENGINEERING

DATE ______________

NOTE: THIS APPROVAL IS VOID AFTER 180 DAYS FROM APPROVAL DATE.
THE CITY WILL NOT BE RESPONSIBLE FOR ERRORS AND/OR OMISSIONS ON THESE PLANS.
FIELD CONDITIONS MAY DICTATE CHANGES TO THESE PLANS AS DETERMINED BY THE DEVELOPMENT ENGINEERING MANAGER.

No.	Date	By	Ckd.	Appr.	Revision
3	10/03/24	DL	DL	JSG	RESPONSE TO CITY COMMENTS, DATED APRIL 12, 2024
2	03/05/24	DL	DL	JSG	RESPONSE TO CITY COMMENTS, DATED FEBRUARY 06, 2024

Title: CONSTRUCTION DETAILS
FORTRESS - PUYALLUP

For: CREF3 PUYALLUP OWNER LLC
11611 SAN VICENTE BLVD
10TH FLOOR
LOS ANGELES, CA 90049

JASON GUY HUBBELL, STATE OF WASHINGTON, 38950, REGISTERED PROFESSIONAL ENGINEER
10/03/2024

Scale: Horizontal NA; Vertical N/A

Designed DL
Drawn RDC
Checked DL
Approved JGH
Date 6/23/23

Barghausen Consulting Engineers, Inc.
18215 72nd Avenue South
Kent, WA 98032
425.251.6222
barghausen.com

Job Number 22085

Sheet C29 of 34

PORTION OF SE QUARTER OF SEC 27, TWN 20 N, RGE. 4 E, W.M.
CITY OF PUYALLUP, PIERCE COUNTY, WASHINGTON

CONSTRUCTION DETAILS

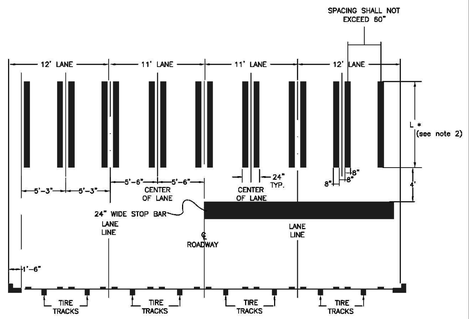

NOTES:

1) FOR ALL ROADWAYS, THE LONGITUDINAL LINES SHALL BE CENTERED ON THE LANE LINES AND IN THE CENTER OF THE TRAVELED PORTION OF THE LANE TO MINIMIZE TIRE WEAR. THE SPACING BETWEEN THE LONGITUDINAL LINES SHALL NOT EXCEED 60".

* 2) THE LENGTH OF A CROSSWALK SHALL BE 8' ACROSS RESIDENTIAL STREETS, 10' ACROSS COLLECTORS AND MINOR ARTERIALS AND 12' ACROSS PRINCIPAL ARTERIALS. HOWEVER, THE LENGTH OF A CROSSWALK SHALL BE 8' ACROSS SIDE STREETS ALONG COLLECTORS AND MINOR ARTERIALS AND 12' ACROSS SIDE STREETS ALONG PRINCIPAL ARTERIALS.

3) STOP BAR WHEN USED WITH A CROSSWALK SHALL BE PLACED FOUR FEET IN ADVANCE OF AND PARALLEL TO THE CROSSWALK ALL STOP BARS SHALL BE 24" WIDE.

4) PAVEMENT MARKINGS, INCLUDING CROSSWALKS, SHALL BE TYPE A LIQUID HOT APPLIED THERMOPLASTIC. PER STANDARD SPECIFICATIONS, SECTION 9-34 PAVEMENT MARKING MATERIAL, 9-34.1 GENERAL.

CITY OF PUYALLUP
DEVELOPMENT ENGINEERING and PUBLIC WORKS DEPARTMENTS

CROSSWALK DETAIL

DRAWN BY	CHECKED BY	APPROVED BY	REVISED BY	CITY STANDARD
JIM ERWIN-SVOBODA	LINDA LIAN	COLLEEN HARRIS	LINDA LIAN	01.03.11
FILE NAME: P:\DWGS\COMMON\STDS\CITY\2009\01_STR\01.03\01.03.11		DATE APPROVED: 07/01/2009	DATE REVISED: 09/11/2013	SCALE: 1:8

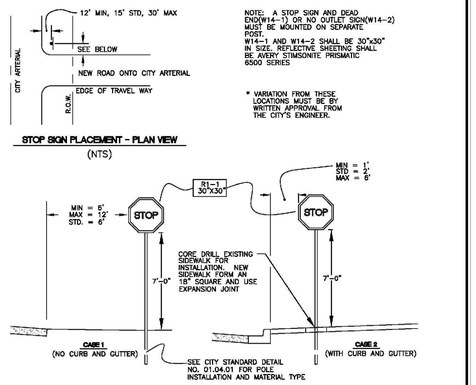

NOTE: A STOP SIGN AND DEAD END(W14-1) OR NO OUTLET SIGN(W14-2) MUST BE MOUNTED ON SEPARATE POST.
W14-1 AND W14-2 SHALL BE 30"x30" IN SIZE. REFLECTIVE SHEETING SHALL BE AVERY STIMSONITE PRISMATIC 6500 SERIES

* VARIATION FROM THESE LOCATIONS MUST BE BY WRITTEN APPROVAL FROM THE CITY'S ENGINEER.

STOP SIGN PLACEMENT - PLAN VIEW
(NTS)

STOP SIGN LATERAL PLACEMENT

NOTES:

1) ALL MATERIAL & WORKMANSHIP SHALL CONFORM TO THE LATEST WSDOT STANDARD PLANS AND SPECIFICATIONS.
2) ALL CLEARING WITHIN CITY RIGHT OF WAY TO MAKE THE SIGN VISIBLE IS THE RESPONSIBILITY OF THE APPLICANT. A RIGHT-OF-WAY PERMIT FROM THE CITY IS REQUIRED BEFORE WORK COMMENCES.
3) THE STOP SIGN SHALL BE VISIBLE FROM A DISTANCE OF AT LEAST 200 FT BACK ON THE APPROACHING ROADWAY WHEN POSTED SPEED IS 25 MPH, 250 FT WHEN POSTED SPEED IS 30 MPH AND 325 FT WHEN POSTED SPEED IS 35 MPH.
4) SIGN MATERIAL SHALL BE ALUMINUM 5052-H38 OR 6061-T6 ALLOY TREATED WITH ALODINE 1200 CONVERSION COATING. THICKNESS SHALL BE 0.080".
5) REFLECTIVE SHEETING FOR ALL SIGNS, EXCEPT STREET NAMES, SHALL BE STIMSONITE TYPE 4 PRISMATIC PERMANENTLY BOUNDED WITH PROTECTIVE PLASTIC SHEETING.
6) LETTERING, LAYOUT, SHAPE AND COLORING SHALL MEET SPECIFIED REQUIREMENTS OF THE MANUAL ON UNIFORM TRAFFIC CONTROL DEVICES, LATEST EDITION.
7) IF YIELD SIGN IS REQUIRED, SIGN SHALL MEET ALL ABOVE REQUIREMENTS AND BE 36" X 36" X 36" IN SIZE.
8) REFERENCE CITY STANDARD DETAIL NO. 01.04.01 FOR POLE MATERIAL AND INSTALLATION.

CITY OF PUYALLUP
DEVELOPMENT ENGINEERING and PUBLIC WORKS DEPARTMENTS

STOP SIGN DETAIL

DRAWN BY	CHECKED BY	APPROVED BY	REVISED BY	CITY STANDARD
JIM ERWIN-SVOBODA	LINDA LIAN	COLLEEN HARRIS	XXXX	01.04.02
FILE NAME: P:\DWGS\COMMON\STDS\CITY\2009\01_STR\01.04\01.04.02		DATE APPROVED: 07/01/2009	DATE REVISED: XX/XX/XX	SCALE: 1:8

NOTES:

1. CENTERLINE STRIPE FOR CHANNELIZATION SHALL BE DETAIL B OR DETAIL C AS DIRECTED BY CITY. CENTERLINE STRIPE FOR ALL COLLECTORS SHALL BE DETAIL D WITH TYPE 2YY RPM SPACED AT 80' INTERVALS ON TANGENTS AND HORZ. CURVES WITH A RADIUS OF 5000' OR MORE AND 40' INTERVALS ON HORZ. CURVES LESS THAN 5000'. CENTERLINE STRIPE FOR ARTERIALS SHALL BE DETAIL E WITH RPM SPACING AS PREVIOUSLY DEFINED.
2. ROADS, UNLESS OTHERWISE DETERMINED BY THE CITY, (ARTERIALS & COLLECTORS) LONGITUDINAL LINES SHALL BE PAINTED. APPLIED 14 MILS WHEN WET.
3. NO PASSING ZONES IN ONE DIRECTION OR BOTH SHALL BE CLEARLY MARKED WITH CENTERLINE STRIPE, DETAIL B OR DETAIL C OR COMBINATION OF DETAIL D AND DETAIL E.
4. ON WIDE INTERSECTIONS SPACE TYPE 1 OR 2 RPM 4 FEET ON CENTER.

RAISED PAVEMENT MARKERS

TYPE 2 RPM (REFLECTIVE)
RAISED FACE COLORS

TYPE 2WR	WHITE AND RED
TYPE 2YR	YELLOW AND RED
TYPE 2YY	YELLOW AND YELLOW
TYPE 2W	WHITE — ONE SIDE ONLY
TYPE 2Y	YELLOW — ONE SIDE ONLY

TYPE 1 RPM COLORS

TYPE 1W	WHITE
TYPE 1Y	YELLOW

*TYPE 3 RPM COLORS

TYPE 3W	8" RUMBLE BAR — WHITE
TYPE 3Y	8" RUMBLE BAR — YELLOW

* CITY MAY REQUIRE REFLECTIVE.

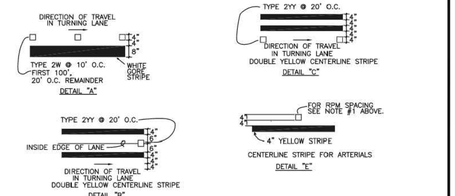

SCALE: 1:4

SKIP STRIPE PATTERN FOR CENTERLINES AND LANE LINES.
DETAIL "D"

SCALE: 1:20

CITY OF PUYALLUP
DEVELOPMENT ENGINEERING and PUBLIC WORKS DEPARTMENTS

PAVEMENT MARKING DETAILS

DRAWN BY	CHECKED BY	APPROVED BY	REVISED BY	CITY STANDARD
JIM ERWIN-SVOBODA	LINDA LIAN	COLLEEN HARRIS	XXXX	01.03.10
FILE NAME: P:\DWGS\COMMON\STDS\CITY\2009\01_STR\01.03\01.03.10		DATE APPROVED: 07/01/2009	DATE REVISED: XX/XX/XX	SCALE: VARIES

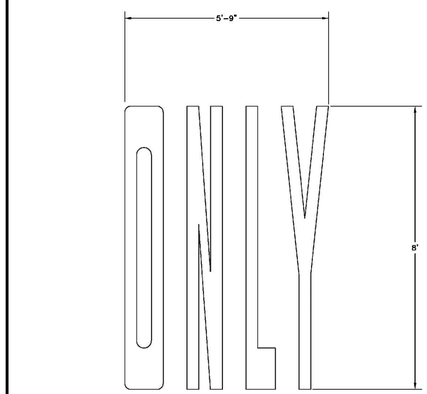

NOTE:

PAVEMENT MARKINGS, INCLUDING CROSSWALKS, SHALL BE TYPE A LIQUID HOT APPLIED THERMOPLASTIC. PER STANDARD SPECIFICATIONS, SECTION 9-34 PAVEMENT MARKING MATERIAL, 9-34.1 GENERAL.

CITY OF PUYALLUP
DEVELOPMENT ENGINEERING and PUBLIC WORKS DEPARTMENTS

PAVEMENT MARKER "ONLY"

DRAWN BY	CHECKED BY	APPROVED BY	REVISED BY	CITY STANDARD
JIM ERWIN-SVOBODA	LINDA LIAN	COLLEEN HARRIS	LINDA LIAN	01.03.15
FILE NAME: P:\DWGS\COMMON\STDS\CITY\2009\01_STR\01.03\01.03.15		DATE APPROVED: 07/01/2009	DATE REVISED: 09/11/2013	SCALE: 0.5

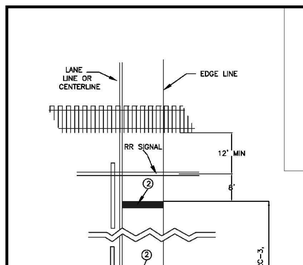

KEY
1. RR CROSSING SYMBOL
2. 2' STOP BAR
3. W10-1 ADVANCE WARNING SIGN
4. SEE "STANDARD ALPHABETS FOR HIGHWAY SIGNS & PAVEMENT MARKINGS, 1977 METRIC EDITION" FOR LETTER LAYOUT.

NOTE:
PAVEMENT MARKINGS SHALL BE HOT EXTRUDED THERMOPLASTIC 125 MIL THICKNESS, UNLESS OTHERWISE SPECIFIED.

SCALE: 1:20

RAILROAD — HIGHWAY GRADE CROSSINGS PAVEMENT MARKING PLACEMENT DETAIL

CITY OF PUYALLUP
DEVELOPMENT ENGINEERING and PUBLIC WORKS DEPARTMENTS

RR CROSSING SYMBOL DETAILS

DRAWN BY	CHECKED BY	APPROVED BY	REVISED BY	CITY STANDARD
JIM ERWIN-SVOBODA	LINDA LIAN	COLLEEN HARRIS	XXXX	01.03.12
FILE NAME: P:\DWGS\COMMON\STDS\CITY\2009\01_STR\01.03\01.03.12		DATE APPROVED: 07/01/2009	DATE REVISED: XX/XX/XX	SCALE: VARIES

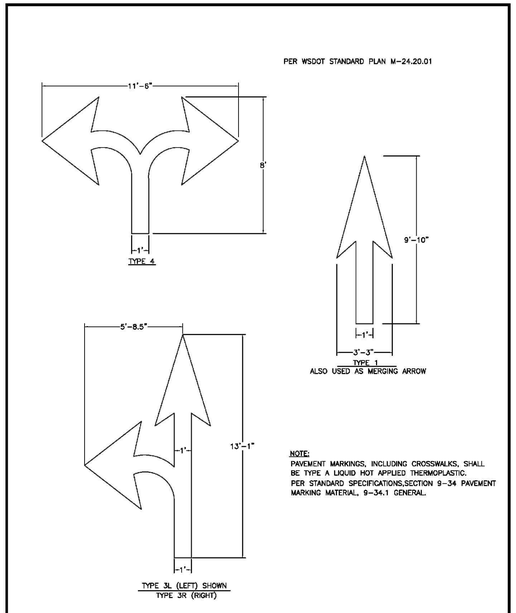

NOTE:
PAVEMENT MARKINGS, INCLUDING CROSSWALKS, SHALL BE TYPE A LIQUID HOT APPLIED THERMOPLASTIC. PER STANDARD SPECIFICATIONS, SECTION 9-34 PAVEMENT MARKING MATERIAL, 9-34.1 GENERAL.

CITY OF PUYALLUP
DEVELOPMENT ENGINEERING and PUBLIC WORKS DEPARTMENTS

PAVEMENT ARROWS

DRAWN BY	CHECKED BY	APPROVED BY	REVISED BY	CITY STANDARD
JIM ERWIN-SVOBODA	LINDA LIAN	COLLEEN HARRIS	LINDA LIAN	01.03.14
FILE NAME: P:\DWGS\COMMON\STDS\CITY\2009\01_STR\01.03\01.03.14		DATE APPROVED: 07/01/2009	DATE REVISED: 09/11/2013	SCALE: 1:4

APPROVED

BY _____
CITY OF PUYALLUP
DEVELOPMENT ENGINEERING

DATE _____

NOTE: THIS APPROVAL IS VOID AFTER 180 DAYS FROM APPROVAL DATE.
THE CITY WILL NOT BE RESPONSIBLE FOR ERRORS AND/OR OMISSIONS ON THESE PLANS.
FIELD CONDITIONS MAY DICTATE CHANGES TO THESE PLANS AS DETERMINED BY THE DEVELOPMENT ENGINEERING MANAGER.

No.	Date	By	Ckd.	Appr.	Revision
3	10/03/24	DL	JSG	JSG	RESPONSE TO CITY COMMENTS, DATED APRIL 12, 2024
2	05/06/24	DL	DL	JSG	RESPONSE TO CITY COMMENTS, DATED FEBRUARY 06, 2024

Title: **CONSTRUCTION DETAILS**

FORTRESS - PUYALLUP

For: **CREF3 PUYALLUP OWNER LLC**
11611 SAN VICENTE BLVD
10TH FLOOR
LOS ANGELES, CA 90049

JASON GUY HUBBARD — STATE OF WASHINGTON — 38950 — REGISTERED PROFESSIONAL ENGINEER
10/03/2024

Scale: Horizontal NA Vertical N/A

Designed DL Drawn RDC Checked DL Approved JGH Date 6/23/23

Barghausen Consulting Engineers, Inc.
18215 72nd Avenue South
Kent, WA 98032
425.251.6222 **barghausen.com**

Job Number **22085**

Sheet **C30 of 34**

P:\22000s\22085\engineering\22085-D.dwg 4/29/2024 12:37 PM RCOX

PORTION OF SE QUARTER OF SEC 27, TWN 20 N, RGE. 4 E, W.M.
CITY OF PUYALLUP, PIERCE COUNTY, WASHINGTON

CONSTRUCTION DETAILS

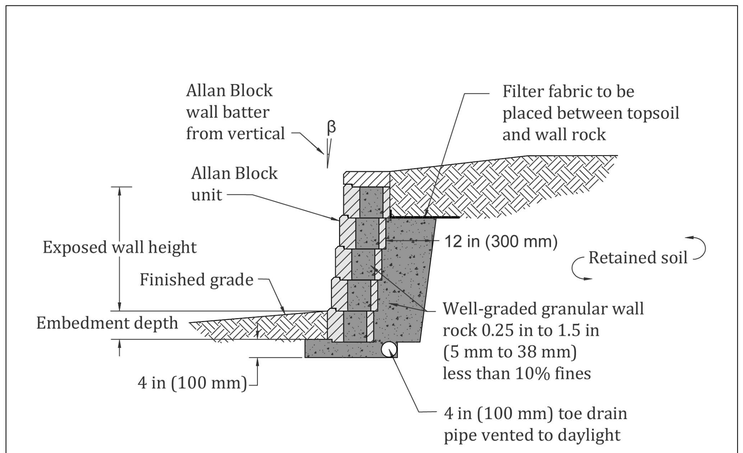

Designed By:	Title: AB-01 TYPICAL GRAVITY WALL	Date:
Checked By:	The purpose of this drawing is for preliminary design only. This should not be used for final design or construction without the certification of a professional engineer registered in the state in which the wall will be built. The accuracy and use of details contained in this document are the sole responsibility of the user. The user must verify each detail for accuracy as they pertain to their particular project.	Project No:
Scale: Not to Scale	allanblock.com © 2021 Allan Block	Drawing No:

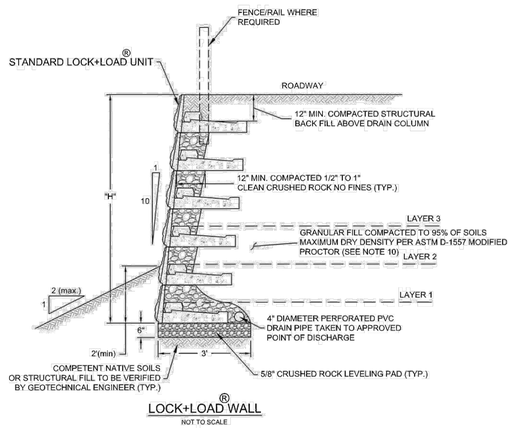

LOCK+LOAD® WALL
NOT TO SCALE

REINFORCING SCHEDULE					
TOTAL NUMBER OF PANELS IN WALL	TOTAL WALL HEIGHT "H"	LAYER NO.	REINFORCEMENT TYPE	REINFORCEMENT LENGTH "L"	HEIGHT (FT)
3 OR LESS	NO REINFORCEMENT REQUIRED				
4	5.33 FT	1	MIRAFI 5 XT	4.50 FT	0.66
5	6.67 FT	1 2	MIRAFI 5 XT	5.50 FT 5.50 FT	0.66 2.00
6	8.00 FT	1 2 3	MIRAFI 5 XT	6.50 FT 6.50 FT 6.50 FT	0.66 2.00 3.33

NOTE: GEOGRID ELEVATION TOLERANCE ± 3" (ALL DIMENSIONS ARE IN FEET)

GENERAL NOTES

1) REFER TO CIVIL GRADING PLANS FOR WALL ALIGNMENTS AND ELEVATIONS.
2) REFER TO REINFORCING SCHEDULE FOR GEOGRID LENGTHS AND ELEVATIONS.
3) GEOGRID ELEVATION MEASURED FROM TOP OF CRUSHED ROCK LEVELING PAD.
4) GEOGRID LENGTH "L" MEASURED FROM BACK OF FACE UNIT.
5) GEOGRID SHALL BE INSTALLED BEHIND WALL WITH MACHINE DIRECTION (STRONGEST AXIS) PERPENDICULAR TO WALL.
6) GEOGRID SHALL BE INSTALLED ON HORIZONTAL SURFACE OF COMPACTED STRUCTURAL FILL.
7) GEOGRID SHALL BE PULLED TIGHT BEHIND WALL. STAKE END OF GEOGRID AS REQUIRED TO MAINTAIN TENSION BEFORE COVERING WITH STRUCTURAL FILL.
8) PROTECT GEOGRID FROM CONSTRUCTION DAMAGE PER MANUFACTURERS SPECIFICATIONS. CONSTRUCTION EQUIPMENT SHALL NOT TRAVEL DIRECTLY ON GEOGRID. ANY GEOGRID THAT IS DAMAGED SHALL BE REPLACED WITH NEW GEOGRID AT CONTRACTORS EXPENSE.
9) LOCK+LOAD ® WALL ASSEMBLY TO BE COMPLETED PER MANUFACTURERS SPECIFICATIONS.
10) STRUCTURAL FILL SHALL BE PLACED AND COMPACTED ACCORDING TO RECOMMENDATIONS PROVIDED IN THE GEOTECHNICAL REPORT, 240 - 15TH STREET SE INDUSTRIAL, 240 - 15TH STREET SOUTHEAST, PUYALLUP, WASHINGTON, PROJECT NO. T-8661, PREPARED BY TERRA ASSOCIATES, INC., DATED JANUARY 12, 2022, REVISED JUNE 23, 2023. STRUCTURAL FILL IN REINFORCED ZONE SHALL BE GRANULAR MATERIAL WITH A MAXIMUM AGGREGATE SIZE OF 3-INCHES AND A MAXIMUM SOIL FINES (LESS THAN # 200 SIEVE) CONTENT OF 30 PERCENT.
11) HEAVY CONSTRUCTION EQUIPMENT SUCH AS VIBRATORY DRUM ROLLERS, LOADED DUMP TRUCKS, FRONT-END LOADERS, ETC., SHALL NOT OPERATE WITHIN FIVE FEET OF BACK OF WALLS. STRUCTURAL FILL PLACED IN THIS ZONE SHALL HAVE MAXIMUM LOOSE LIFT THICKNESS OF 12 INCHES AND SHALL BE COMPACTED USING HAND OPERATED COMPACTION EQUIPMENT.

CAROLYN S. DECKER
STATE OF WASHINGTON
47016
REGISTERED
PROFESSIONAL ENGINEER
2-9-24

Terra Associates, Inc.
Consultants in Geotechnical Engineering Geology and Environmental Earth Sciences

LOCK+LOAD WALL DETAIL
240 - 15TH ST SE INDUSTRIAL
PUYALLUP, WASHINGTON

Proj.No. T-8661 | Date: FEB 2024 | Figure 1

APPROVED

BY _____
CITY OF PUYALLUP
DEVELOPMENT ENGINEERING

DATE _____

NOTE: THIS APPROVAL IS VOID AFTER 180 DAYS FROM APPROVAL DATE.
THE CITY WILL NOT BE RESPONSIBLE FOR ERRORS AND/OR OMISSIONS ON THESE PLANS.
FIELD CONDITIONS MAY DICTATE CHANGES TO THESE PLANS AS DETERMINED BY THE DEVELOPMENT ENGINEERING MANAGER.

No.	Date	By	Ckd.	Appr.	Revision
3	10/03/24	DL	DL	JSG	RESPONSE TO CITY COMMENTS, DATED APRIL 12, 2024
2	03/05/24	DL	DL	JSG	RESPONSE TO CITY COMMENTS, DATED FEBRUARY 06, 2024

Title: **CONSTRUCTION DETAILS**

FORTRESS - PUYALLUP

For: **CREF3 PUYALLUP OWNER LLC**
11611 SAN VICENTE BLVD
10TH FLOOR
LOS ANGELES, CA 90049

JASON GUY HUBBELL
STATE OF WASHINGTON
38950
REGISTERED
PROFESSIONAL ENGINEER
10/03/2024

Scale: Horizontal NA Vertical N/A

Designed DL Drawn RDC Checked DL Approved JGH Date 6/23/23

Barghausen Consulting Engineers, Inc.
18215 72nd Avenue South
Kent, WA 98032
425.251.6222 barghausen.com

Job Number **22085**

Sheet **C31** of **34**

P:\22000s\22085\engineering\22085-D.dwg 4/29/2024 12:37 PM RCOX

PORTION OF SE QUARTER OF SEC 27, TWN 20 N, RGE. 4 E, W.M.
CITY OF PUYALLUP, PIERCE COUNTY, WASHINGTON

CONSTRUCTION DETAILS

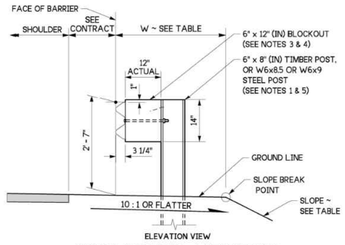

TYPICAL ELEVATION ~ WITHOUT CURB

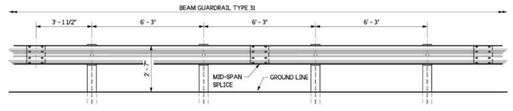

TYPICAL ELEVATION

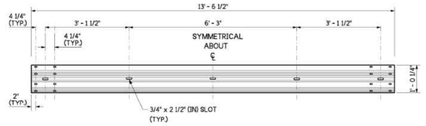

TYPICAL RAIL ELEMENT

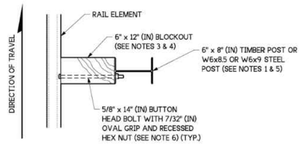

PLAN VIEW

SLOPE/EMBANKMENT TABLE FOR 6', 8', 9', AND 11' LONG POSTS		
POST LENGTH	SLOPE	W (FT)
6-FOOT	2H : 1V OR FLATTER	2.5 MIN.
6-FOOT	1H : 1V OR FLATTER	4.0 MIN.
8-FOOT	STEEPER THAN 2H : 1V TO 1H : 1V	2.5 MIN.
8-FOOT	2H : 1V	0 (FACE OF BARRIER AT SLOPE BREAK POINT)
★ 9-FOOT	STEEPER THAN 2H : 1V TO 1.5H : 1V	0 (FACE OF BARRIER AT SLOPE BREAK POINT)
★ 11-FOOT	STEEPER THAN 1.5H : 1V TO 1H : 1V	0 (FACE OF BARRIER AT SLOPE BREAK POINT)

★ MAY BE USED ONLY IF SHOWN IN CONTRACT DOCUMENTS

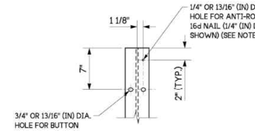

STEEL POST

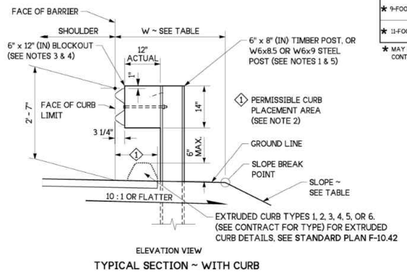

TYPICAL SECTION ~ WITH CURB

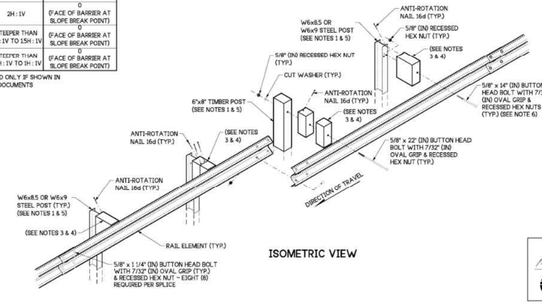

ISOMETRIC VIEW

Oct 12, 2023

BEAM GUARDRAIL TYPE 31

STANDARD PLAN C-20.10-09

SHEET 1 OF 1 SHEET

APPROVED FOR PUBLICATION
Oct 12, 2023
STATE DESIGN ENGINEER
Washington State Department of Transportation

NOTES

1. Refer to **Standard Plan C-1b** for additional details not shown on this plan.
2. Extend shoulder pavement to provide a base for the extruded curb. See Contract Plans for exceptions to distances shown.
3. Use a single block or combination of blocks (no more than two (2) to achieve the actual 12" (in) offset. **See Standard Specification Section 9-16.3(2).** Wood blocks shall be secured to the posts with anti-rotation nails. If combination blocks are used, the adjacent blocks shall be toenailed with two 16d galvanized nails to prevent block rotation.
4. Wood blocks are shown. Blocks of an approved alternative material may be used. See **Standard Specification Section 9-16.3(2).**
5. All posts for any standard barrier run shall be of the same type; timber or steel.
6. Attach blockouts to steel posts using bolt holes on approaching traffic side of post web.
7. Anti-rotation holes in steel posts are not required when using blocks with anti-rotation features (e.g., routered blocks).

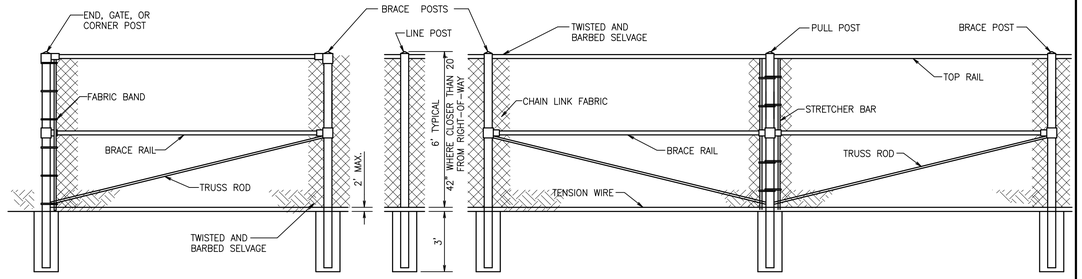

BLACK VINYL COATED CHAIN LINK FENCE

NOT TO SCALE FENCE TO BE INSTALLED AROUND DETENTION POND AS NOTED ON SHEET C6.

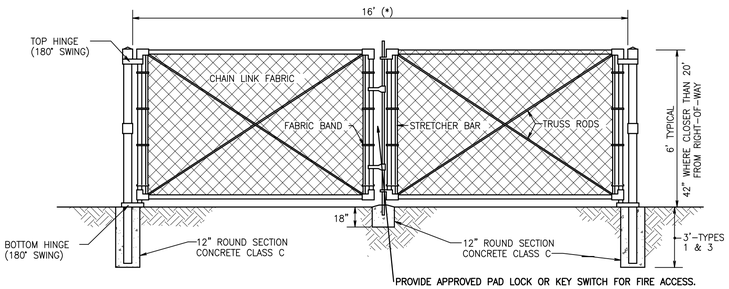

FENCE GATE DETAIL

NOT TO SCALE PER WSDOT STANDARD PLAN L-3

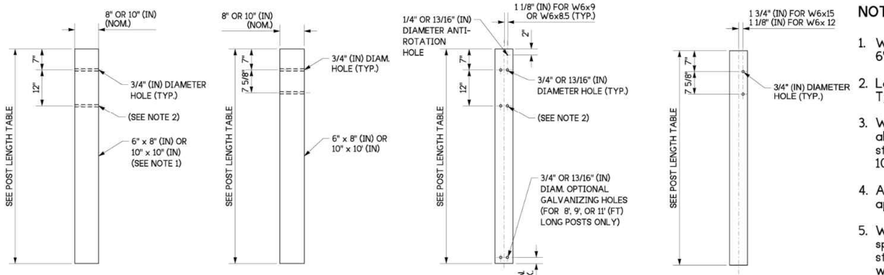

W-BEAM (WOOD POST) | THRIE-BEAM (WOOD POST)

W-BEAM (STEEL POST ~ SEE NOTES 3 AND 4)

THRIE-BEAM (STEEL POST ~ SEE NOTES 3 AND 4)

NOTES:

1. Wood posts for all guardrail placement plans shall be 6" x 8" (in) except where noted otherwise.
2. Lower hole is for w-beam rub rail of Beam Guardrail Type 31 - Buried Terminal Type 2.
3. W6x8.5 or W6x9 steel posts and timber blocks are alternates for 6x8 timber posts and blocks. W6x15 steel posts and timber blocks are alternates for 10" x 10" (in) timber posts and blocks.
4. Attach blockouts to steel posts using bolt holes on approaching traffic side of post web.
5. When "Beam Guardrail Type - __ Ft. Long Post" is specified in the contract, the post length shall be stamped with numbers, 1 1/2" min. high x 3/4" (in) wide at the location where the letter "H" is shown in the **ASSEMBLY DETAIL.** For wood post applications, the letter shall be stamped to a minimum depth of 1/4" (in). For steel post applications, the letter shall be legible after the post is galvanized. After post installation, it shall be the Contractor's responsibility to ensure the stamped numbers remain visible.

POST LENGTH TABLE	
GUARDRAIL TYPE	LENGTH
TYPE 31	6' - 0"
	8' - 0" ★
	9' - 0" ★
	11' - 0" ★
THRIE BEAM	VARIES ★★

★ SEE CONTRACT FOR "BEAM GUARDRAIL TYPE - __ FT. LONG POST" LENGTHS. (SEE NOTE 5)

★★ SEE STANDARD PLANS FOR THRIE BEAM POST LENGTHS

ROUTERED WOOD BLOCKS FOR STEEL POST TABLE		
POST	A	B
W6 x 8.5	6" NOMINAL	4 1/4"
W6 x 9	6" NOMINAL	4 1/4"
W6 x 12	6" NOMINAL	4 1/4"
W6 x 15	8" NOMINAL	6 1/4"

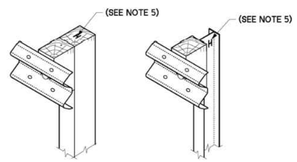

PARTIAL ASSEMBLY DETAIL

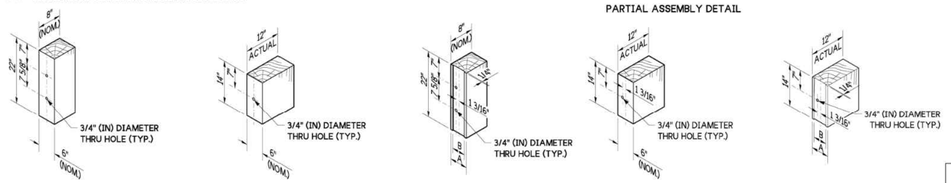

THRIE-BEAM WOOD BLOCK FOR WOOD POST | W-BEAM WOOD BLOCK FOR WOOD POST | ROUTERED THRIE-BEAM WOOD BLOCK FOR STEEL POST | W-BEAM WOOD BLOCK FOR STEEL POST | ROUTERED W-BEAM WOOD BLOCK FOR STEEL POST

Oct 12, 2023

BEAM GUARDRAIL POSTS AND BLOCKS

STANDARD PLAN C-1b

SHEET 1 OF 1 SHEET

APPROVED FOR PUBLICATION
Oct 12, 2023
STATE DESIGN ENGINEER
Washington State Department of Transportation

APPROVED

BY _____
CITY OF PUYALLUP
DEVELOPMENT ENGINEERING

DATE _____

NOTE: THIS APPROVAL IS VOID AFTER 180 DAYS FROM APPROVAL DATE.
THE CITY WILL NOT BE RESPONSIBLE FOR ERRORS AND/OR OMISSIONS ON THESE PLANS.
FIELD CONDITIONS MAY DICTATE CHANGES TO THESE PLANS AS DETERMINED BY THE DEVELOPMENT ENGINEERING MANAGER.

No.	Date	By	Ckd.	Appr.	Revision
3	10/03/24	DL	DL	JSG	RESPONSE TO CITY COMMENTS, DATED APRIL 12, 2024
2	05/05/24	DL	DL	JSG	RESPONSE TO CITY COMMENTS, DATED FEBRUARY 06, 2024

Title: **CONSTRUCTION DETAILS**

FORTRESS - PUYALLUP

For: **CREF3 PUYALLUP OWNER LLC**
11611 SAN VICENTE BLVD
10TH FLOOR
LOS ANGELES, CA 90049

JASON GUY HUBBELL — STATE OF WASHINGTON — 38950 — REGISTERED PROFESSIONAL ENGINEER
10/03/2024

Scale: Horizontal NA Vertical N/A

Designed DL Drawn RDC Checked DL Approved JGH Date 6/23/23

Barghausen Consulting Engineers, Inc.
18215 72nd Avenue South
Kent, WA 98032
425.251.6222
barghausen.com

Job Number **22085**

Sheet **C32** of **34**

P:\22000s\22085\engineering\22085-0.dwg 4/29/2024 12:17 PM RCOX

PORTION OF SE QUARTER OF SEC 27, TWN 20 N, RGE. 4 E, W.M.
CITY OF PUYALLUP, PIERCE COUNTY, WASHINGTON

CITY NOTES

CITY OF PUYALLUP STORMWATER NOTES:

1. ALL WORK IN CITY RIGHT-OF-WAY REQUIRES A PERMIT FROM THE CITY OF PUYALLUP. PRIOR TO ANY WORK COMMENCING, THE GENERAL CONTRACTOR SHALL ARRANGE FOR A PRECONSTRUCTION MEETING AT THE DEVELOPMENT SERVICES CENTER TO BE ATTENDED BY ALL CONTRACTORS THAT WILL PERFORM WORK SHOWN ON THE ENGINEERING PLANS, REPRESENTATIVES FROM ALL APPLICABLE UTILITY COMPANIES, THE PROJECT OWNER AND APPROPRIATE CITY STAFF. CONTACT ENGINEERING SERVICES TO SCHEDULE THE MEETING (253)841-5568. THE CONTRACTOR IS RESPONSIBLE TO HAVE THEIR OWN APPROVED SET OF PLANS AT THE MEETING.
2. AFTER COMPLETION OF ALL ITEMS SHOWN ON THESE PLANS AND BEFORE ACCEPTANCE OF THE PROJECT, THE CONTRACTOR SHALL OBTAIN A "PUNCH LIST" PREPARED BY THE CITY'S INSPECTOR DETAILING REMAINING ITEMS OF WORK TO BE COMPLETED. ALL ITEMS OF WORK SHOWN ON THESE PLANS SHALL BE COMPLETED TO THE SATISFACTION OF THE CITY PRIOR TO ACCEPTANCE OF THE WATER SYSTEM AND PROVISION OF SANITARY SEWER SERVICE.
3. ALL MATERIALS AND WORKMANSHIP SHALL CONFORM TO THE STANDARD SPECIFICATIONS FOR ROAD, BRIDGE, AND MUNICIPAL CONSTRUCTION (HEREINAFTER REFERRED TO AS THE "STANDARD SPECIFICATIONS"), WASHINGTON STATE DEPARTMENT OF TRANSPORTATION AND AMERICAN PUBLIC WORKS ASSOCIATION, WASHINGTON STATE CHAPTER, LATEST EDITION, UNLESS SUPERSEDED OR AMENDED BY THE CITY OF PUYALLUP CITY STANDARDS FOR PUBLIC WORKS ENGINEERING AND CONSTRUCTION (HEREINAFTER REFERRED TO AS THE "CITY STANDARDS").
4. A COPY OF THESE APPROVED PLANS AND APPLICABLE CITY DEVELOPER SPECIFICATIONS AND DETAILS SHALL BE ON SITE DURING CONSTRUCTION.
5. ANY REVISIONS MADE TO THESE PLANS MUST BE REVIEWED AND APPROVED BY THE DEVELOPER'S ENGINEER AND THE ENGINEERING SERVICES STAFF PRIOR TO ANY IMPLEMENTATION IN THE FIELD. THE CITY SHALL NOT BE RESPONSIBLE FOR ANY ERRORS AND/OR OMISSIONS ON THESE PLANS.
6. THE CONTRACTOR SHALL HAVE ALL UTILITIES VERIFIED ON THE GROUND PRIOR TO ANY CONSTRUCTION. CALL AT LEAST TWO WORKING DAYS IN ADVANCE. THE OWNER AND HIS/HER ENGINEER SHALL BE CONTACTED IMMEDIATELY IF A CONFLICT EXISTS.
7. ANY STRUCTURE AND/OR OBSTRUCTION WHICH REQUIRE REMOVAL OR RELOCATION RELATING TO THIS PROJECT, SHALL BE DONE SO AT THE DEVELOPER'S EXPENSE.
8. DURING CONSTRUCTION, ALL EXISTING AND NEWLY INSTALLED DRAINAGE STRUCTURES SHALL BE PROTECTED FROM SEDIMENTS.
9. ALL STORM MANHOLES SHALL CONFORM TO CITY STANDARD DETAIL NO. 02.01.01. FLOW CONTROL MANHOLE/OIL WATER SEPARATOR SHALL CONFORM TO CITY STANDARD DETAIL NO. 02.01.06 AND 02.01.07. MANHOLE RING AND COVER SHALL CONFORM TO CITY STANDARD DETAIL 06.01.02.
10. CATCH BASINS TYPE I SHALL CONFORM TO CITY STANDARD DETAIL NO.02.01.02 AND 02.01.03 AND SHALL BE USED ONLY FOR DEPTHS LESS THAN 5 FEET FROM TOP OF THE GRATE TO THE INVERT OF THE STORM PIPE.
11. CATCH BASINS TYPE II SHALL CONFORM TO CITY STANDARD DETAIL NO.02.01.04 AND SHALL BE USED FOR DEPTHS GREATER THAN 5 FEET FROM TOP OF THE GRATE TO THE INVERT OF THE STORM PIPE. CITY OF PUYALLUP – CITY STANDARDS STORM REVISED 07/2023 200-21
12. CAST IRON OR DUCTILE IRON FRAME AND GRATE SHALL CONFORM TO CITY STANDARD DETAIL NO.02.01.05. GRATE SHALL BE MARKED WITH "DRAINS TO STREAM". SOLID CATCH BASIN LIDS (SQUARE UNLESS NOTED AS SHALL CONFORM TO WSDOT STANDARD PLAN B-30.20-04 (OLYMPIC FOUNDRY NO. SM60 OR EQUAL). VANED GRATES SHALL CONFORM TO WSDOT STANDARD PLAN B-30.30-03 (OLYMPIC FOUNDRY NO. SM60V OR EQUAL).
13. STORMWATER PIPE SHALL BE ONLY PVC, CONCRETE, DUCTILE IRON, OR DUAL WALLED POLYPROPYLENE PIPE.
    A. THE USE OF ANY OTHER TYPE SHALL BE REVIEWED AND APPROVED BY THE ENGINEERING SERVICES STAFF PRIOR TO INSTALLATION.
    B. PVC PIPE SHALL BE PER ASTM D3034, SDR 35 FOR PIPE SIZE 15-INCH AND SMALLER AND F679 FOR PIPE SIZES 18 TO 27 INCH. MINIMUM COVER ON PVC PIPE SHALL BE 3.0 FEET.
    C. CONCRETE PIPE SHALL CONFORM TO THE WSDOT STANDARD SPECIFICATIONS FOR CONCRETE UNDERDRAIN PIPE. MINIMUM COVER ON CONCRETE PIPE SHALL NOT LESS THAN 3.0 FEET.
    D. DUCTILE IRON PIPE SHALL BE CLASS 50, CONFORMING TO AWWA C151. MINIMUM COVER ON DUCTILE IRON PIPE SHALL BE 1.0 FOOT.
    E. POLYPROPYLENE PIPE (PP) SHALL BE DUAL WALLED, HAVE A SMOOTH INTERIOR AND EXTERIOR CORRUGATIONS AND MEET WSDOT 9-05.24(1). 12-INCH THROUGH 30-INCH PIPE SHALL MEET OR EXCEED ASTM F2736 AND AASHTO M330, TYPE S, OR TYPE D. 36-INCH THROUGH 60-INCH PIPE SHALL MEET OR EXCEED ASTM F2881 AND AASHTO M330, TYPE S, OR TYPE D. TESTING SHALL BE PER ASTM F1417. MINIMUM COVER OVER POLYPROPYLENE PIPE SHALL BE 3-FEET.
15. TRENCHING, BEDDING, AND BACKFILL FOR PIPE SHALL CONFORM TO CITY STANDARD DETAIL NO. 06.01.01.
16. STORM PIPE SHALL BE A MINIMUM OF 10 FEET AWAY FROM BUILDING FOUNDATIONS AND/OR ROOF LINES.
17. ALL STORM DRAIN MAINS SHALL BE TESTED AND INSPECTED FOR ACCEPTANCE AS OUTLINED IN SECTION 406 OF THE CITY OF PUYALLUP SANITARY SEWER SYSTEM STANDARDS.
18. ALL TEMPORARY SEDIMENTATION AND EROSION CONTROL MEASURES, AND PROTECTIVE MEASURES FOR CRITICAL AREAS AND SIGNIFICANT TREES SHALL BE INSTALLED PRIOR TO INITIATING ANY CONSTRUCTION ACTIVITIES

CITY OF PUYALLUP SANITARY SEWER NOTES:

1. ALL WORK IN CITY RIGHT-OF-WAY REQUIRES A PERMIT FROM THE CITY OF PUYALLUP. PRIOR TO ANY WORK COMMENCING, THE GENERAL CONTRACTOR SHALL ARRANGE FOR A PRECONSTRUCTION MEETING AT THE DEVELOPMENT SERVICES CENTER TO BE ATTENDED BY ALL CONTRACTORS THAT WILL PERFORM WORK SHOWN ON THE ENGINEERING PLANS, REPRESENTATIVES FROM ALL APPLICABLE UTILITY COMPANIES, THE PROJECT OWNER AND APPROPRIATE CITY STAFF. CONTACT ENGINEERING SERVICES TO SCHEDULE THE MEETING 841-5568. THE CONTRACTOR IS RESPONSIBLE TO HAVE THEIR OWN APPROVED SET OF PLANS AT THE MEETING.
2. AFTER COMPLETION OF ALL ITEMS SHOWN ON THESE PLANS AND BEFORE ACCEPTANCE OF THE PROJECT, THE CONTRACTOR SHALL OBTAIN A "PUNCH LIST" PREPARED BY THE CITY'S INSPECTOR DETAILING REMAINING ITEMS OF WORK TO BE COMPLETED. ALL ITEMS OF WORK SHOWN ON THESE PLANS SHALL BE COMPLETED TO THE SATISFACTION OF THE CITY PRIOR TO ACCEPTANCE OF THE SEWER SYSTEM AND PROVISION OF SANITARY SEWER SERVICE.
3. ALL MATERIALS AND WORKMANSHIP SHALL CONFORM TO THE STANDARD SPECIFICATIONS FOR ROAD, BRIDGE, AND MUNICIPAL CONSTRUCTION (HEREINAFTER REFERRED TO AS THE "STANDARD SPECIFICATIONS"), WASHINGTON STATE DEPARTMENT OF TRANSPORTATION AND AMERICAN PUBLIC WORKS ASSOCIATION, WASHINGTON STATE CHAPTER, LATEST EDITION, UNLESS SUPERSEDED OR AMENDED BY THE CITY OF PUYALLUP CITY STANDARDS FOR PUBLIC WORKS ENGINEERING AND CONSTRUCTION (HEREINAFTER REFERRED TO AS THE "CITY STANDARDS").
4. A COPY OF THESE APPROVED PLANS AND APPLICABLE CITY DEVELOPER SPECIFICATIONS AND DETAILS SHALL BE ON SITE DURING CONSTRUCTION.
5. ANY REVISIONS MADE TO THESE PLANS MUST BE REVIEWED AND APPROVED BY THE DEVELOPER'S ENGINEER AND THE ENGINEERING SERVICES STAFF PRIOR TO ANY IMPLEMENTATION IN THE FIELD. THE CITY SHALL NOT BE RESPONSIBLE FOR ANY ERRORS AND/OR OMISSIONS ON THESE PLANS.
6. THE CONTRACTOR SHALL HAVE ALL UTILITIES VERIFIED ON THE GROUND PRIOR TO ANY CONSTRUCTION. CALL AT LEAST TWO WORKING DAYS IN ADVANCE. THE OWNER AND HIS/HER ENGINEER SHALL BE CONTACTED IMMEDIATELY IF A CONFLICT EXISTS.
7. ANY STRUCTURE AND/OR OBSTRUCTION WHICH REQUIRE REMOVAL OR RELOCATION RELATING TO THIS PROJECT SHALL BE DONE SO AT THE DEVELOPER'S EXPENSE.
8. MINIMUM GRADE ON ALL 4 INCH RESIDENTIAL SIDE SEWERS SHALL BE 2 PERCENT AND 6 INCH COMMERCIAL SIDE SEWERS SHALL BE 1 PERCENT; MAXIMUM SHALL BE 8 PERCENT. ALL SIDE SEWERS SHALL BE 6 INCHES WITHIN CITY RIGHT-OF-WAY.
9. SIDE SEWERS SHALL BE INSTALLED IN ACCORDANCE WITH CITY STANDARD NOS. 04.03.01, 04.03.02, 04.03.03 AND 04.03.04. SIDE SEWER INSTALLATION WORK SHALL BE DONE IN ACCORDANCE WITH THE WASHINGTON INDUSTRIAL SAFETY AND HEALTH ACT (WISHA).
10. ALL SEWER PIPE SHALL BE PVC, POLYPROPYLENE, OR DUCTILE IRON. PVC SEWER PIPE SHALL CONFORM TO ASTM D-3034, SDR35 FOR PIPE SIZES 15-INCH AND SMALLER AND ASTM F679 FOR PIPE SIZES18- TO 27-INCH, DUCTILE IRON PIPE SHALL BE CLASS 51 OR GREATER, LINED WITH PROTECTO 401TM CITY OF PUYALLUP – CITY STANDARDS SANITARY SEWER REVISED 03/2020 400-8 EPOXY LINING OR EQUIVALENT, UNLESS OTHERWISE NOTED. 12-INCH THROUGH 30-INCH POLYPROPYLENE PIPE (PP) SHALL BE DUAL WALLED, HAVE A SMOOTH INTERIOR AND EXTERIOR CORRUGATIONS AND MEET WSDOT 9-05.24(2). IT SHALL MEET OR EXCEED ASTM F2764. 36-INCH THROUGH 60-INCH PP PIPE SHALL BE TRIPLE WALLED AND MEET WSDOT 9-05.24(2). IT SHALL MEET OR EXCEED ASTM F2764. PP SHALL HAVE A MINIMUM PIPE STIFFNESS OF 46 PII WHEN TESTED IN ACCORDANCE WITH ASTM D2412. TESTING SHALL BE PER ASTM F1417. TRENCHING, BEDDING, AND BACKFILL SHALL BE IN ACCORDANCE WITH CITY 3.0 FEET. MINIMUM COVER ON DUCTILE IRON PIPE SHALL BE 1.0 FOOT.
11. SANITARY SEWER MANHOLE FRAMES AND COVERS SHALL CONFORM TO CITY STANDARD NO. 06.01.02.
12. SANITARY SEWER MANHOLES SHALL CONFORM TO CITY STANDARD NOS. 04.01.01, 04.01.02, 04.01.03 AND 04.01.04. ALL MANHOLES SHALL BE CHANNELED FOR FUTURE LINES AS SPECIFIED ON THESE PLANS. MANHOLE STEPS AND LADDER SHALL CONFORM TO STANDARD NO. 06.01.03.
13. SANITARY SEWER PIPE AND SIDE SEWERS SHALL BE 10 FEET AWAY FROM BUILDING FOUNDATIONS AND/OR ROOF LINES WITH THE EXCEPTION OF SIDE SEWERS THAT PROVIDE SERVICE TO A SINGLE-FAMILY RESIDENCE. AT THE DISCRETION OF THE REVIEW ENGINEER, A LICENSED PROFESSIONAL ENGINEER WILL BE REQUIRED TO STAMP THE DESIGN TO ACCOUNT FOR DEPTH OR PROXIMITY TO FOUNDATION, STEEP SLOPES, OR OTHER FACTORS.
14. NO SIDE SEWERS SHALL BE CONNECTED TO ANY HOUSE OR BUILDING UNTIL ALL MANHOLES ARE ADJUSTED TO THE FINISHED GRADE OF THE COMPLETED ASPHALT ROADWAY AND THE ASPHALT PATCH AND SEAL AROUND THE RING ARE ACCEPTED.
15. FOR COMMERCIAL DEVELOPMENTS IN WHICH SOURCES OF GREASE AND/OR OILS MAY BE INTRODUCED TO THE CITY SANITARY SEWER SYSTEM, A CITY APPROVED GREASE INTERCEPTOR SHALL BE INSTALLED DOWNSTREAM FROM THE SOURCE.
16. ONCE SEWER AND ALL OTHER UTILITY CONSTRUCTION IS COMPLETED, ALL SANITARY SEWER MAINS AND SIDE SEWERS SHALL BE TESTED PER SECTION 406 OF THE CITY STANDARDS

ROADWAY NOTES:

1. ALL WORK IN CITY RIGHT-OF-WAY REQUIRES A PERMIT FROM THE CITY OF PUYALLUP. PRIOR TO ANY WORK COMMENCING, THE GENERAL CONTRACTOR SHALL ARRANGE FOR A PRECONSTRUCTION MEETING AT THE DEVELOPMENT SERVICES CENTER TO BE ATTENDED BY ALL CONTRACTORS THAT WILL PERFORM WORK SHOWN ON THE ENGINEERING PLANS, REPRESENTATIVES FROM ALL APPLICABLE UTILITY COMPANIES, THE PROJECT OWNER AND APPROPRIATE CITY STAFF. CONTACT ENGINEERING SERVICES TO SCHEDULE THE MEETING (253) 841-5568. THE CONTRACTOR IS RESPONSIBLE TO HAVE THEIR OWN APPROVED SET OF PLANS AT THE MEETING.
2. AFTER COMPLETION OF ALL ITEMS SHOWN ON THESE PLANS AND BEFORE ACCEPTANCE OF THE PROJECT, THE CONTRACTOR SHALL OBTAIN A "PUNCH LIST" PREPARED BY THE CITY'S INSPECTOR DETAILING REMAINING ITEMS OF WORK TO BE COMPLETED. ALL ITEMS OF WORK SHOWN ON THESE PLANS SHALL BE COMPLETED TO THE SATISFACTION OF THE CITY PRIOR TO ACCEPTANCE OF THE WATER SYSTEM AND PROVISION OF SANITARY SEWER SERVICE.
3. ALL MATERIALS AND WORKMANSHIP SHALL CONFORM TO THE STANDARD SPECIFICATIONS FOR ROAD, BRIDGE, AND MUNICIPAL CONSTRUCTION (HEREINAFTER REFERRED TO AS THE "STANDARD SPECIFICATIONS"), WASHINGTON STATE DEPARTMENT OF TRANSPORTATION AND AMERICAN PUBLIC WORKS ASSOCIATION, WASHINGTON STATE CHAPTER, LATEST EDITION, UNLESS SUPERSEDED OR AMENDED BY THE CITY OF PUYALLUP CITY STANDARDS FOR PUBLIC WORKS ENGINEERING AND CONSTRUCTION (HEREINAFTER REFERRED TO AS THE "CITY STANDARDS").
4. A COPY OF THESE APPROVED PLANS AND APPLICABLE CITY DEVELOPER SPECIFICATIONS AND DETAILS SHALL BE ON SITE DURING CONSTRUCTION.
5. ANY REVISIONS MADE TO THESE PLANS MUST BE REVIEWED AND APPROVED BY THE DEVELOPER'S ENGINEER AND THE ENGINEERING SERVICES STAFF PRIOR TO ANY IMPLEMENTATION IN THE FIELD. THE CITY SHALL NOT BE RESPONSIBLE FOR ANY ERRORS AND/OR OMISSIONS ON THESE PLANS.
6. THE CONTRACTOR SHALL HAVE ALL UTILITIES VERIFIED ON THE GROUND PRIOR TO ANY CONSTRUCTION. CALL (811) AT LEAST TWO WORKING DAYS IN ADVANCE. THE OWNER AND HIS/HER ENGINEER SHALL BE CONTACTED IMMEDIATELY IF A CONFLICT EXISTS.
7. ANY STRUCTURE AND/OR OBSTRUCTION WHICH REQUIRES REMOVAL OR RELOCATION RELATING TO THIS PROJECT, SHALL BE DONE SO AT THE DEVELOPER'S EXPENSE.
8. MONUMENTS SHALL BE INSTALLED AT ALL STREET INTERSECTIONS, AT ANGLE POINTS, AND POINTS OF CURVATURE IN EACH STREET. ALL BOUNDARY MONUMENTS MUST BE INSTALLED ACCORDING TO THE WASHINGTON STATE SUBDIVISION LAWS.
9. CURB AND GUTTER INSTALLATION SHALL CONFORM TO CITY STANDARD DETAIL 01.02.09.
10. SIDEWALKS AND DRIVEWAYS SHALL BE INSTALLED AS LOTS ARE BUILT ON. SIDEWALKS AND DRIVEWAYS SHALL CONFORM TO CITY STANDARD DETAIL 01.02.01, 01.02.02 AND 01.02.12. IF ASPHALT IS DAMAGED DURING REPLACEMENT OF CURB AND GUTTER, THE REPAIR SHALL CONFORM TO CITY STANDARD DETAIL 01.02.10.
11. THE SURROUNDING GROUND (5 FEET BEYOND THE BASE) FOR ALL POWER TRANSFORMERS, TELEPHONE/TV PEDESTALS, AND STREET LIGHT MAIN DISCONNECTS SHALL BE GRADED TO A POSITIVE 2 PERCENT SLOPE FROM TOP OF CURB.
12. SIGNAGE AND TRAFFIC CONTROL DEVICES ARE SAFETY ITEMS AND SHALL BE INSTALLED PRIOR TO ISSUANCE OF ANY CERTIFICATE OF OCCUPANCY OR PLAT APPROVAL. HOWEVER, IN LARGER DEVELOPMENTS, EXACT LOCATIONS OF STOP AND YIELD SIGNS MAY NEED TO BE DETERMINED AFTER FULL BUILDOUT WHEN TRAFFIC PATTERNS HAVE BEEN ESTABLISHED. IN THIS CASE, CONTRACTOR SHALL PROVIDE INDICATED "CITY-PLACED" SIGNS, SIGNPOSTS, AND BRACKETS TO THE CITY SIGN SPECIALIST (253) 841-5471 FOR LATER INSTALLATION BY THE CITY. ALL SIGNAGE SHALL BE IN ACCORDANCE WITH THE MANUAL ON UNIFORM TRAFFIC CONTROL DEVICES (MUTCD).
13. PRIOR TO ANY SIGN OR STRIPING INSTALLATION OR REMOVAL THE CONTRACTOR SHALL CONTACT THE CITY SIGN SPECIALIST (253) 841-5471 TO ARRANGE FOR AN ON-SITE MEETING TO DISCUSS PLACEMENT AND UNIFORMITY.
14. NEW OR REVISED STOP SIGNS OR YIELD SIGNS SHALL BE ADVANCE WARNED USING THE PROCEDURE OUTLINED IN THE MUTCD. ADVANCE WARNING SIGNS AND FLAGS SHALL BE MAINTAINED BY INSTALLER FOR 30 DAYS AND THEN REMOVED.

CITY OF PUYALLUP WATER SYSTEM NOTES:

1. ALL WORK IN CITY RIGHT-OF-WAY REQUIRES A PERMIT FROM THE CITY OF PUYALLUP. PRIOR TO ANY WORK COMMENCING, THE GENERAL CONTRACTOR SHALL ARRANGE FOR A PRECONSTRUCTION MEETING AT THE DEVELOPMENT SERVICES CENTER TO BE ATTENDED BY ALL CONTRACTORS THAT WILL PERFORM WORK SHOWN ON THE ENGINEERING PLANS, REPRESENTATIVES FROM ALL APPLICABLE UTILITY COMPANIES, THE PROJECT OWNER AND APPROPRIATE CITY STAFF. CONTACT ENGINEERING SERVICES TO SCHEDULE THE MEETING 841-5568. THE CONTRACTOR IS RESPONSIBLE TO HAVE THEIR OWN APPROVED SET OF PLANS AT THE MEETING.
2. AFTER COMPLETION OF ALL ITEMS SHOWN ON THESE PLANS AND BEFORE ACCEPTANCE OF THE PROJECT, THE CONTRACTOR SHALL OBTAIN A "PUNCH LIST" PREPARED BY THE CITY'S INSPECTOR DETAILING REMAINING ITEMS OF WORK TO BE COMPLETED. ALL ITEMS OF WORK SHOWN ON THESE PLANS SHALL BE COMPLETED TO THE SATISFACTION OF THE CITY PRIOR TO ACCEPTANCE OF THE WATER SYSTEM AND PROVISION OF SANITARY SEWER SERVICE.
3. ALL MATERIALS AND WORKMANSHIP SHALL CONFORM TO THE STANDARD SPECIFICATIONS FOR ROAD, BRIDGE, AND MUNICIPAL CONSTRUCTION (HEREINAFTER REFERRED TO AS THE "STANDARD SPECIFICATIONS"), WASHINGTON STATE DEPARTMENT OF TRANSPORTATION AND AMERICAN PUBLIC WORKS ASSOCIATION, WASHINGTON STATE CHAPTER, LATEST EDITION, UNLESS SUPERSEDED OR AMENDED BY THE CITY OF PUYALLUP CITY STANDARDS FOR PUBLIC WORKS ENGINEERING AND CONSTRUCTION (HEREINAFTER REFERRED TO AS THE "CITY STANDARDS"), OR AS DIRECTED BY FRUITLAND MUTUAL WATER COMPANY (FMWC), VALLEY WATER (VW), OR TACOMA CITY WATER (TCW) IS THE PURVEYOR.
4. A COPY OF THESE APPROVED PLANS AND APPLICABLE CITY DEVELOPER SPECIFICATIONS AND DETAILS SHALL BE ON SITE DURING CONSTRUCTION.
5. ANY REVISIONS MADE TO THESE PLANS MUST BE REVIEWED AND APPROVED BY THE DEVELOPER'S ENGINEER, THE ENGINEERING SERVICES STAFF, AND THE FMWC, VW OR TCW WHEN SERVED BY THAT PURVEYOR, PRIOR TO ANY IMPLEMENTATION IN THE FIELD. THE CITY SHALL NOT BE RESPONSIBLE FOR ANY ERRORS AND/OR OMISSIONS ON THESE PLANS.
6. THE CONTRACTOR SHALL HAVE ALL UTILITIES VERIFIED ON THE GROUND PRIOR TO ANY CONSTRUCTION. CALL AT LEAST TWO WORKING DAYS IN ADVANCE. THE OWNER AND HIS/HER ENGINEER SHALL BE CONTACTED IMMEDIATELY IF A CONFLICT EXISTS.
7. ANY STRUCTURE AND/OR OBSTRUCTION WHICH REQUIRES REMOVAL OR RELOCATION RELATING TO THIS PROJECT SHALL BE DONE SO AT THE DEVELOPER'S EXPENSE.
8. BACTERIOLOGICAL (COLIFORM AND IRON BACTERIA) TEST SAMPLES WILL BE TAKEN BY THE CITY (OR FMWC, VW OR TCW WHEN SERVED BY THAT PURVEYOR) AND PAID FOR BY THE CONTRACTOR, EXCEPT FOR CAPITAL IMPROVEMENT PROJECTS (CIP) WHICH SHALL BE PAID FOR BY THE CITY.
9. WATER MAINS SHALL HAVE A MINIMUM COVER OF 36 INCHES FROM PAVED FINAL GRADE IN IMPROVED RIGHT-OF-WAY AND IMPROVED EASEMENTS, AND A MINIMUM OF 48 INCHES IN UNIMPROVED RIGHT-OF-WAY AND UNIMPROVED EASEMENTS. CITY OF PUYALLUP – CITY STANDARDS WATER REVISED 7/2023 300-8
10. PIPE FOR WATER MAINS SHALL BE DUCTILE IRON CONFORMING TO SECTION 7-09 OF THE STANDARD SPECIFICATIONS, CLASS 52 WITH TYTON OR APPROVED EQUAL JOINTS. PIPE SHALL BE CEMENT LINED IN ACCORDANCE WITH A.S.A. SPECIFICATION A 21.4-1964.
11. CONNECTIONS TO EXISTING WATER MAINS TYPICALLY SHALL BE WET TAPS THROUGH A TAPPING TEE AND TAPPING VALVE AND SHALL BE MADE BY A CITY APPROVED CONTRACTOR. THE TAPPING SLEEVE SHALL BE ROMAC SST ALL STAINLESS STEEL TAPPING SLEEVE OR APPROVED EQUAL. A TWO-PIECE EPOXY COATED OR DUCTILE IRON TAPPING SLEEVE MAY BE USED ON DUCTILE IRON PIPE, WHEN THE TAP IS SMALLER THAN THE WATER MAIN SIZE I.E. 6-INCH TAP ON 8-INCH PIPE. THE CITY (OR FMWC, VW OR TCW WHEN SERVED BY THAT PURVEYOR) SHALL APPROVE THE TIME AND LOCATION FOR THESE CONNECTIONS.
12. ALL WATER MAINS AND APPURTENANCES SHALL BE HYDROSTATICALLY TESTED AT 200 PSI IN ACCORDANCE WITH STANDARD SPECIFICATION 7-09.3(23). PRESSURE TESTING SHALL NOT BE PERFORMED UNTIL SATISFACTORY PURITY SAMPLES HAVE BEEN RECEIVED, EXCEPT WHEN NEW WATER MAINS ARE INSTALLED INDEPENDENTLY FROM THE WATER SYSTEM PIPING.
13. FIRE HYDRANTS SHALL BE INSTALLED IN ACCORDANCE WITH CITY STANDARD DETAIL 03.05.01 AND AS DIRECTED BY THE CITY OF PUYALLUP FIRE CODE OFFICIAL.
14. VALVE MARKER POSTS SHALL BE INSTALLED WHERE VALVE BOXES ARE HIDDEN FROM VIEW OR IN UNPAVED THE INSTALLATION SHALL BE IN ACCORDANCE WITH CITY STANDARD DETAIL 03.01.02.
15. RESILIENT SEATED WEDGE GATE VALVES SHALL BE USED FOR 10-INCH MAINS AND SMALLER. BUTTERFLY VALVES SHALL BE USED FOR MAINS GREATER THAN 10 INCHES.
16. PIPE FITTING FOR WATER MAINS SHALL BE DUCTILE IRON AND SHALL BE MECHANICAL JOINT CONFORMING TO AWWA SPECIFICATION C111-72.
17. WATER MAIN PIPE AND SERVICE CONNECTIONS SHALL BE A MINIMUM OF 10 FEET AWAY FROM BUILDING FOUNDATIONS AND/OR ROOF LINES.
18. WHERE A WATER MAIN CROSSES THE NORTHWEST GAS PIPELINE, THE WATER LINE SHALL BE CASED WITH PVC PIPE A MINIMUM OF 10 FEET BEYOND EACH SIDE OF THE GAS LINE EASEMENT. CONTACT WILLIAMS NORTHWEST PIPELINE BEFORE THE CROSSING IS MADE.
19. TRENCHING, BEDDING, AND BACKFILL FOR WATER MAINS SHALL BE INSTALLED IN ACCORDANCE WITH CITY STANDARD DETAIL 06.01.01.
20. ALL COMMERCIAL AND INDUSTRIAL DEVELOPMENTS, IRRIGATION SYSTEMS, AND MULTI-FAMILY WATER SERVICE CONNECTIONS SHALL BE PROTECTED BY A DOUBLE CHECK VALVE ASSEMBLY OR A REDUCED PRESSURE BACKFLOW ASSEMBLY AS DIRECTED BY THE CITY (OR FMWC, VW OR TCW WHEN SERVED BY THAT PURVEYOR) CONFORMING TO CITY STANDARD DETAILS 03.04.01, 03.04.02, AND 03.04.03.
21. ANY LEAD JOINT FITTING DISTURBED DURING CONSTRUCTION SHALL BE REPLACED WITH A MECHANICAL JOINT FITTING AT THE CONTRACTOR'S EXPENSE.
22. HYDRAULIC FIRE FLOW MODELING SHALL BE REQUIRED FOR FORMAL PLATS WITHIN OR TO BE ANNEXED INTO THE CITY OF PUYALLUP'S WATER SERVICE AREA. THE DEVELOPER SHALL BE RESPONSIBLE TO APPLY FOR A HYDRAULIC MODEL PERMIT PRIOR TO PLAT REVIEW. THE HYDRAULIC MODELING CRITERIA IS BASED ON THE PROJECTED WATER DEMAND WHILE MAINTAINING A MINIMUM SYSTEM PRESSURE OF 20 POUNDS PER SQUARE INCH (PSI) AND A MAXIMUM VELOCITY OF 10 FEET PER SECOND.
23. WHEN USING A FIRE HYDRANT FOR NON-FIREFIGHTING PURPOSES, A CITY HYDRANT METER MUST BE USED. COORDINATE THE ACQUISITION OF THE HYDRANT METER WITH THE CITY'S UTILITY BILLING DIVISION AT PUYALLUP CITY HALL. A CITY APPROVED BACKFLOW PROTECTION ASSEMBLY SHALL BE INSTALLED BY THE PERSON REQUESTING USE OF A FIRE HYDRANT. THE ASSEMBLY SHALL BE ACCOMPANIED BY A CURRENT BACKFLOW ASSEMBLY TEST REPORT. THE TEST REPORT SHALL BE AVAILABLE AT THE SITE FOR THE DURATION OF THE HYDRANT USE.
24. SHOULD A BREAK OCCUR ON ANY CITY WATER MAIN, THE CONTRACTOR SHALL FOLLOW THE CITY'S ADOPTED "WATER MAIN BREAK PROCEDURE" ISSUED TO THEM AT THE PRE-CONSTRUCTION MEETING AND NOTIFY THOSE CONNECTED TO THE SYSTEM IN THE IMPACTED AREA AS OUTLINED IN THE PROCEDURE.
25. WATER MAIN REPAIRS (REFERENCES: AWWA C651-14 AND WSDOT STANDARD SPECIFICATION SECTION 7-09) (NOTE: A PLANNED WATER MAIN REPAIR SHALL BE APPROVED BY THE CITY INSPECTOR AND/OR WATER DIVISION SUPERVISOR PRIOR TO COMMENCING WORK.)
    a. REPAIR WITHOUT DEPRESSURIZATION – SMALL LEAKS SHALL BE REPAIRED USING REPAIR BANDS WHILE MAINTAINING POSITIVE PRESSURE IN THE WATER MAIN. VALVES SURROUNDING THE LEAK WILL BE PARTIALLY SHUT BY THE CITY WATER DEPARTMENT TO REDUCE THE FLOW AND PRESSURE TO THE AREA. BLOWOFFS AND HYDRANTS IN THE REDUCED PRESSURE AREA MAY BE OPENED AS NEEDED TO FURTHER REDUCE THE PRESSURE. THE WATER MAIN TRENCH SHALL BE OVER-EXCAVATED TO ALLOW WATER IN THE TRENCH TO BE PUMPED OUT AND MAINTAINED BELOW THE LEVEL OF THE WATER MAIN. THE REPAIR SHALL BE COMPLETED WITH THE WATER MAIN PRESSURE REMAINING POSITIVE. AFTER THE REPAIR IS MADE, THE SYSTEM SHALL BE FULLY PRESSURIZED AND A VISUAL LEAK INSPECTION WILL BE COMPLETED. THE WATER MAIN IN THE AFFECTED AREA SHALL BE FLUSHED TO ACHIEVE THREE PIPE VOLUMES PULLED FROM THE PIPE (DISTANCE MEASURED FROM VALVE OPENED FOR FLUSHING TO THE EXIT HYDRANT OR BLOWOFF).
    b. REPAIR/CUT-IN WITH DEPRESSURIZATION – TRENCH SHALL BE OVER EXCAVATED AND DEWATERED BELOW THE WATER MAIN. FLUSH WATER FROM PIPE FROM EACH DIRECTION UNTIL IT RUNS CLEAR. IMMEDIATELY PRIOR TO INSTALLATION OF A NEW PIPE SECTION FOR REPAIR OR CUT IN TEE, ALL NEW FITTINGS AND PIPE SPOOLS SHALL BE SWABBED WITH A FIVE PERCENT (5%) CHLORINE SOLUTION (MINIMUM). THE INTERIOR OF THE EXISTING PIPE SHALL BE SWABBED WITH A FIVE PERCENT (5%) CHLORINE SOLUTION AT LEAST 6 FEET IN EACH DIRECTION FROM EXPOSED CUT ENDS. THE WATER MAIN IN THE AFFECTED AREA SHALL BE FLUSHED TO ACHIEVE THREE PIPE VOLUMES PULLED FROM THE PIPE (DISTANCE MEASURED FROM THE VALVE OPENED FOR FLUSHING TO THE EXIT HYDRANT OR BLOWOFF). CUSTOMERS SHALL BE NOTIFIED AFTER THE WATER MAIN IS FLUSHED AND REPAIRS HAVE BEEN COMPLETED, AS OUTLINED IN THE "WATER MAIN BREAK PROCEDURE."
26. NEW WATER MAIN INSTALLATION:
    a. EACH NEW WATER MAIN SECTION SHALL BE DELIVERED, STACKED AND STORED ONSITE WITH ENDS PLUGGED. THE PLUGS SHALL REMAIN IN THE PIPE UNTIL EACH PARTICULAR SECTION IS INSTALLED. NATIONAL SANITATION FOUNDATION (NSF) APPROVED SIXTY-FIVE PERCENT (65%) CALCIUM HYPOCHLORITE SHALL BE ADDED TO THE UPSTREAM END OF EACH PIPE SECTION, AND AT EACH HYDRANT TEE IN THE AMOUNT GIVEN IN THE TABLE BELOW (OR PER APPROVED MANUFACTURER SPECIFICATIONS). THE MINIMUM AMOUNT OF CALCIUM HYPOCHLORITE ADDED SHOULD BE SUFFICIENT TO ACHIEVE A 50 MG/L CONCENTRATION WITHIN THE IMPACTED AREA.

GRADING, EROSION AND SEDIMENT CONTROL NOTES:

1. ALL WORK IN CITY RIGHT-OF-WAY REQUIRES A PERMIT FROM THE CITY OF PUYALLUP. PRIOR TO ANY WORK COMMENCING, THE GENERAL CONTRACTOR SHALL ARRANGE FOR A PRECONSTRUCTION MEETING AT THE DEVELOPMENT SERVICES CENTER TO BE ATTENDED BY ALL CONTRACTORS THAT WILL PERFORM WORK SHOWN ON THE ENGINEERING PLANS, REPRESENTATIVES FROM ALL APPLICABLE UTILITY COMPANIES, THE PROJECT OWNER AND APPROPRIATE CITY STAFF. CONTACT ENGINEERING SERVICES TO SCHEDULE THE MEETING (253) 841-5568. THE CONTRACTOR IS RESPONSIBLE TO HAVE THEIR OWN APPROVED SET OF PLANS AT THE MEETING.
2. AFTER COMPLETION OF ALL ITEMS SHOWN ON THESE PLANS AND BEFORE ACCEPTANCE OF THE PROJECT, THE CONTRACTOR SHALL OBTAIN A "PUNCH LIST" PREPARED BY THE CITY'S INSPECTOR DETAILING REMAINING ITEMS OF WORK TO BE COMPLETED. ALL ITEMS OF WORK SHOWN ON THESE PLANS SHALL BE COMPLETED TO THE SATISFACTION OF THE CITY PRIOR TO ACCEPTANCE OF THE WATER SYSTEM AND PROVISION OF SANITARY SEWER SERVICE.
3. ALL MATERIALS AND WORKMANSHIP SHALL CONFORM TO THE STANDARD SPECIFICATIONS FOR ROAD, BRIDGE, AND MUNICIPAL CONSTRUCTION (HEREINAFTER REFERRED TO AS THE "STANDARD SPECIFICATIONS"), WASHINGTON STATE DEPARTMENT OF TRANSPORTATION AND AMERICAN PUBLIC WORKS ASSOCIATION, WASHINGTON STATE CHAPTER, LATEST EDITION, UNLESS SUPERSEDED OR AMENDED BY THE CITY OF PUYALLUP CITY STANDARDS FOR PUBLIC WORKS ENGINEERING AND CONSTRUCTION (HERINAFTER REFERRED TO AS THE "CITY STANDARDS").
4. A COPY OF THESE APPROVED PLANS AND APPLICABLE CITY DEVELOPER SPECIFICATIONS AND DETAILS SHALL BE ON SITE DURING CONSTRUCTION.
5. ANY REVISIONS MADE TO THESE PLANS MUST BE REVIEWED AND APPROVED BY THE DEVELOPER'S ENGINEER AND THE CITY ENGINEER PRIOR TO ANY IMPLEMENTATION IN THE FIELD. THE CITY SHALL NOT BE RESPONSIBLE FOR ANY ERRORS AND/OR OMISSIONS ON THESE PLANS.
6. THE CONTRACTOR SHALL HAVE ALL UTILITIES VERIFIED ON THE GROUND PRIOR TO ANY CONSTRUCTION. CALL (811) AT LEAST TWO WORKING DAYS HOURS IN ADVANCE. THE OWNER AND HIS/HER ENGINEER SHALL BE CONTACTED IMMEDIATELY IF A CONFLICT EXISTS.
7. ALL LIMITS OF CLEARING AND AREAS OF VEGETATION PRESERVATION AS PRESCRIBED ON THE PLANS SHALL BE CLEARLY FLAGGED IN THE FIELD AND OBSERVED DURING CONSTRUCTION.
8. ALL REQUIRED SEDIMENTATION AND EROSION CONTROL FACILITIES MUST BE CONSTRUCTED AND IN OPERATION PRIOR TO ANY LAND CLEARING AND/OR OTHER CONSTRUCTION TO ENSURE THAT SEDIMENT LADEN WATER DOES NOT ENTER THE NATURAL DRAINAGE SYSTEM. THE CONTRACTOR SHALL SCHEDULE AN INSPECTION OF THE EROSION CONTROL FACILITIES PRIOR TO ANY LAND CLEARING AND/OR OTHER CONSTRUCTION. ALL EROSION AND SEDIMENT FACILITIES SHALL BE MAINTAINED IN A SATISFACTORY CONDITION AS DETERMINED BY THE CITY, UNTIL SUCH TIME THAT CLEARING AND/OR CONSTRUCTION IS COMPLETED AND THE POTENTIAL FOR ONSITE EROSION HAS PASSED. THE IMPLEMENTATION, MAINTENANCE, REPLACEMENT, AND ADDITIONS TO THE EROSION AND SEDIMENTATION CONTROL SYSTEMS SHALL BE THE RESPONSIBILITY OF THE PERMITTEE.
9. THE EROSION AND SEDIMENTATION CONTROL SYSTEM FACILITIES DEPICTED ON THESE PLANS ARE INTENDED TO BE MINIMUM REQUIREMENTS TO MEET ANTICIPATED SITE CONDITIONS. AS CONSTRUCTION PROGRESSES AND UNEXPECTED OR SEASONAL CONDITIONS DICTATE, FACILITIES WILL BE NECESSARY TO ENSURE COMPLETE SILTATION CONTROL ON THE SITE. DURING THE COURSE OF CONSTRUCTION, IT SHALL BE THE OBLIGATION AND RESPONSIBILITY OF THE PERMITTEE TO ADDRESS ANY NEW CONDITIONS THAT MAY BE CREATED BY HIS ACTIVITIES AND TO PROVIDE ADDITIONAL FACILITIES, OVER AND ABOVE THE MINIMUM REQUIREMENTS, AS MAY BE NEEDED TO PROTECT ADJACENT PROPERTIES, SENSITIVE AREAS, NATURAL WATER COURSES, AND/OR STORM DRAINAGE SYSTEMS.
10. APPROVAL OF THESE PLANS IS FOR GRADING, TEMPORARY DRAINAGE, EROSION AND SEDIMENTATION CONTROL ONLY. IT DOES NOT CONSTITUTE AN APPROVAL OF PERMANENT STORM DRAINAGE DESIGN, SIZE OR LOCATION OF PIPES, RESTRICTORS, CHANNELS, OR RETENTION FACILITIES.
11. ANY DISTURBED AREA WHICH HAS BEEN STRIPPED OF VEGETATION AND WHERE NO FURTHER WORK IS ANTICIPATED FOR A PERIOD OF 30 DAYS OR MORE, MUST BE IMMEDIATELY STABILIZED WITH MULCHING, GRASS PLANTING, OR OTHER APPROVED EROSION CONTROL TREATMENT APPLICABLE TO THE TIME OF YEAR IN QUESTION. GRASS SEEDING ALONE WILL BE ACCEPTABLE ONLY DURING THE MONTHS OF APRIL THROUGH SEPTEMBER INCLUSIVE. SEEDING MAY PROCEED OUTSIDE THE SPECIFIED TIME PERIOD WHENEVER IT IS IN THE INTEREST OF THE PERMITTEE BUT MUST BE AUGMENTED WITH MULCHING, NETTING, OR OTHER TREATMENT APPROVED BY THE CITY.
12. IN CASE EROSION OR SEDIMENTATION OCCURS TO ADJACENT PROPERTIES, ALL CONSTRUCTION WORK WITHIN THE DEVELOPMENT THAT WILL FURTHER AGGRAVATE THE SITUATION MUST CEASE, AND THE OWNER/CONTRACTOR WILL IMMEDIATELY COMMENCE RESTORATION METHODS. RESTORATION ACTIVITY WILL CONTINUE UNTIL SUCH TIME AS THE AFFECTED PROPERTY OWNER IS SATISFIED.
13. NO TEMPORARY OR PERMANENT STOCKPILING OF MATERIALS OR EQUIPMENT SHALL OCCUR WITHIN CRITICAL AREAS OR ASSOCIATED BUFFERS, OR THE CRITICAL ROOT ZONE FOR VEGETATION PROPOSED FOR RETENTION.

APPROVED

BY ____________________
CITY OF PUYALLUP
DEVELOPMENT ENGINEERING

DATE ____________________

NOTE: THIS APPROVAL IS VOID AFTER 180 DAYS FROM APPROVAL DATE.
THE CITY WILL NOT BE RESPONSIBLE FOR ERRORS AND/OR OMISSIONS ON THESE PLANS.
FIELD CONDITIONS MAY DICTATE CHANGES TO THESE PLANS AS DETERMINED BY THE DEVELOPMENT ENGINEERING MANAGER.

No.	Date	By	Ckd.	Appr.	Revision
3	10/03/24	DL	DL	JSG	RESPONSE TO CITY COMMENTS, DATED APRIL 12, 2024
2	03/05/24	DL	DL	JSG	RESPONSE TO CITY COMMENTS, DATED FEBRUARY 06, 2024

Title: CITY NOTES
FORTRESS - PUYALLUP

For: CREF3 PUYALLUP OWNER LLC
11611 SAN VICENTE BLVD
10TH FLOOR
LOS ANGELES, CA 90049

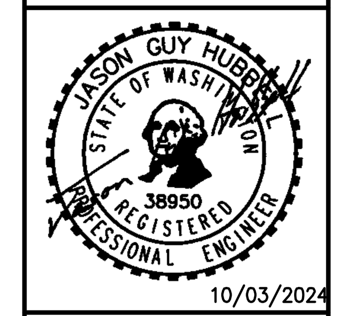

10/03/2024

Scale: Horizontal NA, Vertical N/A

Designed DL
Drawn RDC
Checked DL
Approved JGH
Date 6/23/23

Barghausen Consulting Engineers, Inc.
18215 72nd Avenue South
Kent, WA 98032
425.251.6222
barghausen.com

Job Number 22085

Sheet C33 of 34

P:\22000s\22085\engineering\22085-0.dwg 4/30/2024 1:29 PM RCOX

PORTION OF SE QUARTER OF SEC 27, TWN 20 N, RGE. 4 E, W.M.
CITY OF PUYALLUP, PIERCE COUNTY, WASHINGTON

FIRE LANE MARKING PLAN

N

0 20' 40' 80'
SCALE: 1"=40'

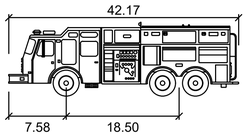

Tacoma Fire Truck 2 updated 2021

	feet
Width	: 6.91
Track	: 6.91
Lock to Lock Time	: 6.0
Steering Angle	: 27.9

PROVIDE OPTICOM ON GATE. DETAILS, PLACEMENT, AND BATTERY BACKUP BOX BY OTHERS

START FIRE MARKING

FIRE LANE MARKING WITH "NO PARKING ANYTIME" SIGNS @ 50' O.C.

END FIRE MARKING

START FIRE MARKING

R28'

20'

START FIRE MARKING

FIRE LANE MARKING WITH "NO PARKING ANYTIME" SIGNS SEE SIGNAGE AND MARKING NOTES

END FIRE MARKING

START FIRE MARKING

FIRE LANE MARKING WITH "NO PARKING ANYTIME" SIGNS @ 50' O.C.

BUILDING
FF=61.1

END FIRE MARKING

END FIRE MARKING

FIRE LANE MARKING WITH "NO PARKING ANYTIME" SIGNS

FIRE LANE MARKING WITH "NO PARKING ANYTIME" SIGNS

15TH STREET SE
(PUBLIC ROW)

E PIONEER WAY
(PUBLIC ROW)

FIRE MARKING AND SIGNAGE NOTES

1. LANES SHALL BE IDENTIFIED BY A 4 INCH WIDE LINE AND BLOCK LETTERS 2 FEET HIGH, PAINTED IN THE LANE, AT 50 FOOT OR SUCH OTHER INTERVALS WHICH THE FIRE CODE OFFICIAL DETERMINES TO BE REASONABLE, STATING 'EMERGENCY VEHICLES ONLY,' COLOR TO BE DETERMINED BY THE FIRE CODE OFFICIAL (BRIGHT YELLOW), AND BY POSTING OF SIGNS STATING 'EMERGENCY VEHICLES ONLY – NO PARKING – VIOLATOR VEHICLES SUBJECT TO IMPOUND.'
2. SIGNS SHALL BE POSTED ON OR IMMEDIATELY NEXT TO THE CURB LINE, OR ON THE BUILDING.
3. SIGNS SHALL BE 12" X 18" AND SHALL HAVE LETTERS AND BACKGROUND OF CONTRASTING COLORS, READILY READABLE FROM AT LEAST A 50 FOOT DISTANCE.
4. SIGNS SHALL BE POSTED AT A MINIMUM NO FURTHER THAN 50 FEET APART, UNLESS A GREATER DISTANCE IS DEEMED REASONABLE BY THE FIRE CODE OFFICIAL, NOR SHALL THEY BE MORE THAN 4 FEET FROM THE GROUND UNLESS A GREATER HEIGHT IS DETERMINED NECESSARY BY THE FIRE CODE OFFICIAL.

811 Know what's **below.** **Call** before you dig.

APPROVED

BY _____
CITY OF PUYALLUP
DEVELOPMENT ENGINEERING

DATE _____

NOTE: THIS APPROVAL IS VOID AFTER 180 DAYS FROM APPROVAL DATE.
THE CITY WILL NOT BE RESPONSIBLE FOR ERRORS AND/OR OMISSIONS ON THESE PLANS.
FIELD CONDITIONS MAY DICTATE CHANGES TO THESE PLANS AS DETERMINED BY THE DEVELOPMENT ENGINEERING MANAGER.

No.	Date	By	Ckd.	Appr.	Revision
3	10/03/24	DL	DL	JSG	RESPONSE TO CITY COMMENTS, DATED APRIL 12, 2024
2	05/05/24	DL	DL	JSG	RESPONSE TO CITY COMMENTS, DATED FEBRUARY 06, 2024

Title: **FIRE LANE MARKING PLAN**

FORTRESS - PUYALLUP

For: **CREF3 PUYALLUP OWNER LLC**
11611 SAN VICENTE BLVD
10TH FLOOR
LOS ANGELES, CA 90049

JASON GUY HUBBELL — STATE OF WASHINGTON — 38950 — REGISTERED PROFESSIONAL ENGINEER
10/03/2024

Scale: Horizontal 1"=40' Vertical N/A

Designed DL Drawn RDC Checked DL Approved JGH Date 6/23/23

Barghausen Consulting Engineers, Inc.
18215 72nd Avenue South
Kent, WA 98032
425.251.6222 barghausen.com

Job Number **22085**

Sheet **C34** of 34

P:\22000s\22085\engineering\22085-FIRE.dwg 2/13/2024 11:21 AM RCOX

SECTION 27, TOWNSHIP 20 NORTH, RANGE 4 E., W.M.

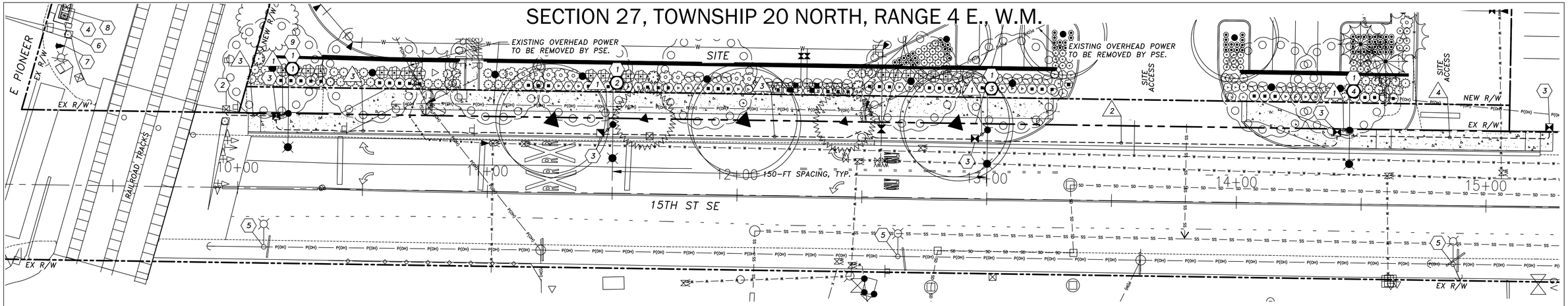

ILLUMINATION GENERAL NOTES

1. THE LOCATION OF ALL CONDUITS, JUNCTION BOXES, POLES AND CABINETS SHOWN ON THIS PLAN MAY BE SLIGHTLY ADJUSTED IN THE FIELD TO AVOID CONFLICTS. ALL FINAL LOCATIONS SHALL BE APPROVED BY THE CITY ENGINEER PRIOR TO CONSTRUCTION.
2. ALL CONDUCTORS FOR ALL ELECTRICAL EQUIPMENT SHALL BE LABELED IN EACH JUNCTION BOX.
3. ALL CONDUITS SHALL BE RIGID HOT-DIPPED GALVANIZED STEEL OR SCHEDULE 80 PVC WHEN EXPOSED ABOVE THE GROUND. SEE SPECIAL PROVISIONS.
4. ALL JUNCTION BOXES SHALL BE PLACED BEHIND SIDEWALK, UNLESS OTHERWISE NOTED.
5. ALL WORK SHALL BE IN ACCORDANCE WITH CITY OF PUYALLUP STANDARDS AND SPECIFICATIONS.
6. THE LOCATIONS OF FEATURES SHOWN ARE APPROXIMATE AND SHALL BE VERIFIED IN THE FIELD BY THE CONTRACTOR AS NECESSARY.
7. THE CONTRACTOR SHALL SUBMIT A REQUEST TO THE INSPECTOR FOR MATERIALS APPROVAL MIN. 30-DAYS PRIOR TO REQUIRED APPROVAL DATE.
8. ALL WORK SHALL BE CONSISTENT WITH UTILITY AGENCY REQUIREMENTS. THE CONTRACTOR SHALL CONTACT ALL PERTINENT UTILITY AGENCIES 48 HOURS BEFORE COMMENCING WORK, AND SHALL COORDINATE WITH AFFECTED UTILITY AGENCIES THROUGHOUT THE PROJECT.
9. THE CONTRACTOR SHALL BE RESPONSIBLE FOR ANY DAMAGE TO EXISTING UTILITIES. THE CONTRACTOR SHALL NOTIFY THE AFFECTED UTILITY COMPANY AND THE CITY OF PUYALLUP IMMEDIATELY UPON DAMAGE.
10. EXISTING FEATURES TO REMAIN UNLESS OTHERWISE NOTED.
11. THE TOP ELEVATION OF ALL POLE FOUNDATIONS SHALL BE APPROVED BY THE INSPECTOR PRIOR TO PLACING CONCRETE.
12. IF STREET LIGHT IS TO BE INSTALLED GREATER THAN 4 FEET FROM EDGE OF THE DRIVING SURFACE THE STREET LUMINAIRE ARMS SHALL BE ADJUSTED TO A DIMENSION THAT PROVIDES A MINIMUM OF 3-FT OVERHANG ONTO THE DRIVING SURFACE PER CITY OF PUYALLUP STANDARD PLAN 01.05.04.
13. ANY NEW JUNCTION BOX WHICH WILL BE LOCATED WITHIN OR PARTIALLY WITHIN SIDEWALK SHALL HAVE LIDS AND FRAMES WITH A NON-SLIP COATING ON THE TOP SURFACE EQUAL TO MEBAC1 OR SLIPNOT#3.
14. ALL PROJECT MATERIALS SHALL BE REVIEWED AND APPROVED BY THE CITY OF INSPECTOR PRIOR TO PROCUREMENT. MATERIALS NOT APPROVED BY THE CITY INSPECTOR SHALL NOT BE ALLOWED ON THE JOB SITE.
15. SEE CITY OF PUYALLUP STANDARD PLANS 01.05.01 AND 01.05.02 FOR STREET LIGHT SPECIFICATIONS.
16. A COPY OF THE LOAD CALCULATIONS SHALL BE PROVIDED TO THE CITY'S SIGNAL TECHNICIAN PRIOR TO INSTALLATION.

CITY OF PUYALLUP ILLUMINATION GENERAL NOTES

1. ALL WORK SHALL BE IN ACCORDANCE WITH CITY OF PUYALLUP PUBLIC WORKS STANDARDS AND WSDOT STANDARDS AND SPECIFICATIONS.
2. THE LOCATIONS OF FEATURES SHOWN ARE APPROXIMATE AND SHALL BE VERIFIED BY THE CONTRACTOR PRIOR TO CONSTRUCTION START.
3. UTILITY LOCATIONS ARE APPROXIMATE AND SHALL BE VERIFIED IN THE FIELD BY THE CONTRACTOR PRIOR TO ANY ILLUMINATION WORK.
4. ALL WORK SHALL BE CONSISTENT WITH UTILITY AGENCY REQUIREMENTS. THE CONTRACTOR SHALL COORDINATE WITH AFFECTED UTILITY AGENCIES THROUGHOUT THE PROJECT. THE CONTRACTOR SHALL BE RESPONSIBLE FOR ANY DAMAGE TO UTILITIES.
5. CONDUIT LOCATIONS ARE SHOWN FOR ILLUSTRATIVE PURPOSES. ACTUAL LOCATIONS SHALL BE DETERMINED BY THE CONTRACTOR IN THE FIELD.
6. CONTRACTOR SHALL COORDINATE WITH THE CITY SIGNAL/ILLUMINATION TECHNICIAN AT 253-405-4390 PRIOR TO CONSTRUCTION.
7. THE LOCATION OF ALL CONDUITS, JUNCTION BOXES, POLES, AND CABINETS SHOWN ON THIS PLAN MAY BE ADJUSTED IN THE FIELD TO AVOID CONFLICTS AND MEET ADA REQUIREMENTS. ALL FINAL LOCATIONS SHALL BE APPROVED BY THE CITY TRAFFIC ENGINEER PRIOR TO CONSTRUCTION.
8. JUNCTION BOX LOCATIONS SHOWN ARE FOR ILLUSTRATIVE PURPOSES ONLY. JUNCTION BOXES SHALL BE FIELD LOCATED BY THE CONTRACTOR WITH DIRECTION FROM THE CITY.
9. CONTRACTOR SHALL ADJUST JUNCTION BOX LIDS TO BE FLUSH WITH TOP OF SIDEWALK.
10. ANY NEW JUNCTION BOX WHICH WILL BE LOCATED WITHIN OR PARTIALLY WITHIN SIDEWALK SHALL HAVE LIDS AND FRAMES WITH A NON-SLIP COATING ON THE TOP SURFACE EQUAL TO MEBAC1 OR SLIPNOT#3.
11. IT IS THE SOLE RESPONSIBILITY OF THE DESIGN ENGINEER TO ENSURE STREETLIGHT DESIGN/PLACEMENT IS OUTSIDE OF THE 10FT MINIMUM SAFE ZONE AREA FROM PSE PRIMARY.

ILLUMINATION CONSTRUCTION NOTES

1. CONSTRUCT FOUNDATION PER CITY OF PUYALLUP STANDARD PLAN 01.05.06. FURNISH AND INSTALL NEW LUMINAIRE WITH SHORTING CAP, POLE AND ARM PER CITY OF PUYALLUP STANDARD PLANS 01.05.01, 01.05.02, 01.05.03 & 01.05.04, SHEET IL-02, AND PER ILLUMINATION POLE SCHEDULE, THIS SHEET.
2. EXTEND NEW CONDUIT TO EXISTING JUNCTION BOX. PULL NEW ILLUMINATION CONDUCTORS THROUGH EXISTING CONDUIT TO EXISTING SERVICE CABINET. TERMINATE NEW CONDUCTORS IN EXISTING SERVICE CABINET.
3. INSTALL NEW JUNCTION BOX PER CITY OF PUYALLUP STANDARD PLAN 01.06.01.
4. EXISTING SERVICE CABINET TO REMAIN. ROUTE NEW ILLUMINATION CONDUCTORS THROUGH EXISTING CONDUIT TO EXISTING SERVICE CABINET. TERMINATE NEW ILLUMINATION CONDUCTORS TO SPARE CONTACTOR IN EXISTING SERVICE CABINET. IF NO SPARE CONTACTOR IS AVAILABLE, INSTALL NEW CONTACTOR AND TERMINATE NEW ILLUMINATION CONDUCTORS.
5. EXISTING UTILITY POLE MOUNTED LUMINAIRE TO REMAIN.
6. EXISTING TYPE III SIGNAL MAST ARM POLE TO REMAIN.
7. FURNISH AND INSTALL VIDEO DETECTION SYSTEM PER CITY OF PUYALLUP STANDARD SPECIFICATIONS 9-29.18, EXCEPT SYSTEM SHALL BE GRIDSMART. MOUNT GRIDSMART BELL CAMERA ON EXISTING TYPE III SIGNAL POLE STREETLIGHT ARM. CONTRACTOR SHALL CONTACT CITY OF PUYALLUP SIGNAL TECHNICIAN (253-341-8439) FOR ANY COORDINATION WITH TRAFFIC SIGNAL OR STREETLIGHT INSTALLATION. CONTRACTOR SHALL COORDINATE WITH GRIDSMART REPRESENTATIVE (NICK COFFEE – NICK.COFFEE@GRIDSMART.COM) FOR HARDWARE AND CONFIGURATION NEEDS.
8. EXISTING SIGNAL CONTROLLER CABINET TO REMAIN. INSTALL GRIDSMART GS3 VIDEO PROCESSING UNIT IN EXISTING CONTROLLER CABINET. PULL NEW VIDEO CONDUCTORS THROUGH EXISTING CONDUIT TO EXISTING SIGNAL CONTROLLER CABINET. DISCONNECT CONDUCTORS FOR 15TH ST SE SOUTHBOUND LOOP DETECTION AND PULL BACK TO EXISTING CONTROLLER CABINET AND DISCARD. CONTRACTOR SHALL INSTALL VIDEO EQUIPMENT IN SIGNAL CONTROLLER CABINET AS REQUIRED BY CITY OF PUYALLUP SPECIFICATIONS.
9. FIELD FIT LIGHT POLE TO ENSURE THERE ARE NO OBSTRUCTIONS WITH RR FLASHER/SIGNING.

ILLUMINATION WIRING DIAGRAM

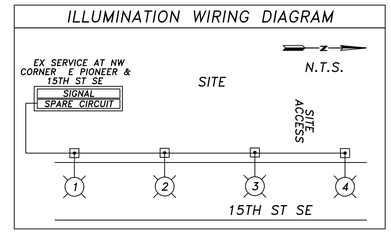

NOTE:
VIDEO DETECTION SYSTEM SHALL BE INSTALLED AND FULLY OPERATIONAL PRIOR TO DISABLING IN-GROUND LOOP DETECTION SYSTEM.

CITY OF PUYALLUP POLE SPACING REQUIREMENTS

ROADWAY	CLASSIFICATION	MAX. SPACING
15TH ST SE	MINOR ARTERIAL	150'

* CITY OF PUYALLUP STANDARDS SECTION 102.12

ILLUMINATION WIRING SCHEDULE

NO.	RACEWAY CONDUIT SIZE	ILLUM. #8	EQUIP. GRND *	DETECTABLE PULL WIRE
1	2" SCH40 PVC	2	1	
2	2" SCH80 PVC	2	1	
	2" SCH80 PVC SPARE			1
3	2" SCH40 PVC	2	1	
	2" SCH40 PVC SPARE			1
4	2" SCH80 PVC SPARE			1
	2" SCH80 PVC SPARE			1

* EQUIPMENT GROUND SIZE SHALL BE EQUAL TO OR LARGER THAN THE LARGEST WIRE SIZE IN THE CONDUIT.

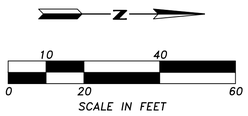

ILLUMINATION LEGEND

EXISTING	NEW	DESCRIPTION
		JUNCTION BOX TYPE 1,2
		LIGHT STANDARD
		UTILITY POLE
		UTILITY POLE MOUNTED LIGHT
		GRIDSMART BELL CAMERA
		CONDUIT
		SERVICE CABINET
		CONSTRUCTION NOTE
		LIGHT POLE NUMBER
		WIRE NOTE

ILLUMINATION POLE SCHEDULE

LUM. POLE NO.	STREET	STATION *	OFFSET *	MOUNT. HEIGHT	VOLTAGE	ARM LENGTH	SERVICE/ CIRCUIT	WATTAGE /TYPE	INITIAL LUMENS	LUMINAIRE TYPE – DISTRIBUTION	SHORTING CAP	POLE TYPE	BASE	COMMENT
1	15TH ST SE	10+20.0 **	30.0' LT **	30'	240	12'	ILLUM A	194/LED	23,000	GE EVOLVE LED ERSL-0-23-C3-40-D-GRAY-A-L-VI	YES	ROUND STEEL	FIXED	FDN PER CITY OF PUYALLUP STD 01.05.06.
2	15TH ST SE	11+50.0	27.5' LT	30'	240	12'	ILLUM A	194/LED	23,000	GE EVOLVE LED ERSL-0-23-C3-40-D-GRAY-A-L-VI	YES	ROUND STEEL	FIXED	FDN PER CITY OF PUYALLUP STD 01.05.06.
3	15TH ST SE	13+00.0	27.5' LT	30'	240	12'	ILLUM A	194/LED	23,000	GE EVOLVE LED ERSL-0-23-C3-40-D-GRAY-A-L-VI	YES	ROUND STEEL	FIXED	FDN PER CITY OF PUYALLUP STD 01.05.06.
4	15TH ST SE	14+45.0	29.5' LT	30'	240	12'	ILLUM A	194/LED	23,000	GE EVOLVE LED ERSL-0-23-C3-40-D-GRAY-A-L-VI	YES	ROUND STEEL	FIXED	FDN PER CITY OF PUYALLUP STD 01.05.06.

* STATIONING AND OFFSETS ARE APPROXIMATE. CONTRACTOR SHALL CONFIRM ADJUSTMENTS WITH ENGINEER PRIOR TO IMPLEMENTING.
** FIELD FIT LIGHT POLE TO ENSURE THERE ARE NO OBSTRUCTIONS WITH RR FLASHER/SIGNING.

APPROVED

BY _____
CITY OF PUYALLUP
DEVELOPMENT ENGINEERING

DATE _____

NOTES: THIS APPROVAL IS VOID AFTER 180 DAYS FROM APPROVAL DATE.
THE CITY WILL NOT BE RESPONSIBLE FOR ERRORS AND/OR OMISSIONS ON THESE PLANS.
FIELD CONDITIONS MAY DICTATE CHANGES TO THESE PLANS AS DETERMINED BY THE DEVELOPMENT ENGINEERING MANAGER.

Replace Fire Code Official approval block with City of Puyallup Development Engineering Approval Block. [civils, IL-01]

△	REVISION	DATE	BY

DESIGNED BY: BVL/SSO
DRAWN BY: SSO
APPROVED BY: TDR
ISSUE DATE: 04/29/2024
JOB NO.: TENW #2022-311
DRAWING FILE NO.:

TREVIN D. ROLETTO — STATE OF WASHINGTON — 41861 — REGISTERED PROFESSIONAL ENGINEER
04/29/2024

TENW
Transportation Engineering NorthWest
Transportation Planning | Design | Traffic Impact & Operations
11400 SE 8th Street, Suite 200, Bellevue, WA 98004 | Office (425) 889-6747
Project Contact: Trevin Roletto, P.E.
Phone: 425-250-0583

FORTRESS INVESTMENT GROUP
11611 SAN VICENTE BLVD
10TH FLOOR
LOS ANGELES, CA 90049

FORTRESS PUYALLUP

ILLUMINATION PLAN

DRAWING NO.: IL-01
SHEET NO.: 35 OF 46 SHEETS

SECTION 27, TOWNSHIP 20 NORTH, RANGE 4 E., W.M.

STREET LIGHTING SPECIFICATIONS

1. 30-FOOT STEEL STREETLIGHT STANDARD
   a. DIMENSIONS

      STREETLIGHT STANDARDS SHALL PROVIDE A FIXTURE MOUNTING HEIGHT OF 30'0" PLUS OR MINUS 6" WITH A TYPICAL 12 FOOT MAST ARM WITH A THREE FOOT OVERHANG.

      BASE PLATE SHALL HAVE SLOTTED HOLES TO ACCOMMODATE 1-INCH ANCHOR BOLTS, AND 11 1/2" BOLT CIRCLE WITH MINIMUM CLEARANCE OF 1" BETWEEN BOLT AND POLE.

      HANDHOLE CENTER SHALL BE LOCATED APPROXIMATELY 12 INCHES FROM THE BASE PLATE, ROTATED 270 DEGREES FROM MAST ARM SO AS THE HANDHOLE IS LOCATED ON THE SIDE OPPOSING ONCOMING TRAFFIC.
   b. STRENGTH

      POLES SHALL MEET ALL STRENGTH REQUIREMENTS OF AASHTO FOR 90 MPH ISOTACH WHEN USED WITH A LUMINAIRE WEIGHING 48 POUNDS WITH A E.P.A. OF 1.1 SQUARE FEET. ALL ATTACHING BOLTS AND SCREWS THAT ARE NOT GALVANIZED SHALL BE STAINLESS STEEL.
   c. FINISH

      THE POLES AND ALL HARDWARE SAHALL BE HOT DIPPED GALVANIZED, MINIMUM 3 MIL THICKNESS.
   d. MAST ARM ATTACHMENT SHALL BE SECURED BY 3 BOLTS.
   e. EACH POLE SHALL HAVE HANDHOLE (WITH COVER), GROUND LUG AND REMOVABLE POLE CAP.
   f. EACH CITY POLE SHALL HAVE A BLACK 4" TO 6" LETTER C STENCILED ON ROADWAY SIDE OF POLE 16" ABOVE GRADE.
2. ANCHORAGE
   a. POLES SHALL BE ANCHORED WITH 4 BOLTS, 1"X36"X4" #8UNC WITH HOT DIPPED GALVANIZING AFTER THREADS ARE CUT. GALVANIZED AREA SHALL EXTEND FROM THREADED END FOR A MINIMUM OF 12 INCHES. BOLTS SHALL BE PROVIDED WITH 2 GALVANIZED NUTS AND FLAT WASHERS FOR LEVELING. SHIMS WILL NOT BE USED.
   b. A NON-SHRINKING GROUT SHALL BE INSTALLED WITH ONE 1/2" DRAIN HOLE UNDER THE BASE PLATE AFTER THE ENGINEER HAS APPROVED THE POLE INSTALLATION.
3. CONDUIT

   ALL CONDUIT SHALL BE BURIED A MINIMUM OF 24 INCHES DEEP. ALL ROADWAY CROSSINGS SHALL BE RIGID METALLIC OR SCHEDULE 80 PVC. CONDUIT SHALL CONFORM TO SECTION 9-29 OF WSDOT STANDARD SPECIFICATIONS. SCHEDULE 80 PVC MAY BE USED IN LOCATIONS OTHER THAN ROADWAY CROSSINGS.

CITY OF PUYALLUP
DEVELOPMENT ENGINEERING and PUBLIC WORKS DEPARTMENTS

STREET LIGHT SPECIFICATIONS

DRAWN BY	CHECKED BY	APPROVED BY	REVISED BY	CITY STANDARD
JIM ERWIN-SVOBODA	LINDA LIAN	COLLEEN HARRIS	LINDA LIAN	01.05.01
FILE NAME F:\DWG\COMMON\STDS\CITY\2009\01_STR\01.05\01.05.01		DATE APPROVED 07/01/2009	DATE REVISED 02/25/2015	SCALE 1:1

(STR LIGHT SPECS CONTINUED)

4. JUNCTION BOXES (WHEN REQUIRED)

   JUNCTION BOXES SHALL BE INSTALLED AT LOCATIONS AS SHOWN ON THE PLANS. THEY WILL CONFORM TO WSDOT STANDARD PLAN J-40.10-02, TYPE 1. THEY SHALL BE LEVEL WITH THE SIDEWALK GRADE AND FIRMLY BEDDED TO PREVENT FUTURE SETTLING. JUNCTION BOXES ARE PREFERRED NOT TO BE INSTALLED IN THE SIDEWALK. THE COVER SHALL BE GALVANIZED AND GROUNDED. THE LETTERS "LT" SHALL BE ETCHED ON THE COVER. (SEE CITY STANDARD DETAIL NO. 01.06.01). IF THE JUNCTION BOX IS NOT IN THE SIDEWALK THEN IT SHALL HAVE A CONCRETE COLLAR. IF THE JUNCTION BOX IS IN THE SIDEWALK THEN IT SHALL HAVE A NON-SLIP SURFACE TREATMENT. SEE CITY STANDARD DETAIL NO. 01.06.01.
5. CONDUCTORS, WIRES, ETC.

   WIRE CONDUCTORS FOR UNDERGROUND FEEDER RUNS AND FOR CIRCUITRY FROM THE IN-LINE FUSE IN THE POLES TO THE JUNCTION BOX SHALL BE 600 VOLT, SINGLE CONDUCTOR STRANDED COPPER AND INSULATED WITH USE GRADE POLYVINYL CHLORIDE COMPOUND (XLP) OR APPROVED EQUAL IN ACCORDANCE WITH THE INSULATED POWER CABLE ENGINEER'S ASSOCIATION SPECIFICATIONS. AN AWG NO. 8 GREEN INSULATED STRANDED COPPER WIRE WILL BE RUN TO THE SERVICE GROUND LUG ON EACH POLE. FEEDERS SHALL BE SIZED IN ACCORDANCE WITH THE NATIONAL ELECTRICAL CODE. WIRES INSIDE THE POLE BETWEEN BALLAST AND IN-LINE FUSES SHALL BE ROME 2C AWG 10 STRANDED POLE AND BRACKET WIRE OR APPROVED EQUAL. SPLICES WILL BE ALLOWED IN JUNCTION BOXES AND POLE BASES ONLY. NO MORE THAN 2 CONDUITS WILL BE ALLOWED INSIDE THE STREET POLE.
6. FUSES

   LUMINARE FUSING AND ELECTRICAL CONNECTIONS AT LIGHT STANDARD BASES SHALL CONFORM TO SECTION 9-29.7 OF THE STATE OF WASHINGTON STANDARD SPECIFICATIONS AND AS SHOWN ON THE UNIFORM LUMINARE WIRING DETAIL IN THE APPENDIX. IN-LINE FUSE HOLDERS SHALL BE SEC MODEL 1791-SF WITH FNM-5 FUSES OR APPROVED EQUAL. (REFER TO CITY STANDARD DETAIL NO. 01.06.01)
7. LUMINAIRES AND LAMPS

   RESIDENTIAL STREETS AND NEIGHBORHOOD COLLECTORS:
   LEOTEK LED GC1-40E-MV-NW-2-530 (67 WATT LED)

   ARTERIALS AND COMMERCIAL COLLECTORS:
   GE EVOLVE LED ERSL-0-23-C3-40-D-GRAY-A-L-VI (194 WATT LED)

   THE CITY WILL ENERGIZE THE STREET LIGHTS WHEN A HOME IS OCCUPIED ADJACENT TO A STREET LIGHT OR IMMEDIATELY ACROSS THE STREET. AT THE DEVELOPER'S REQUEST, STREET LIGHTS MAY BE ENERGIZED PRIOR TO OCCUPANCY OF HOMES. HOWEVER, THE DEVELOPER OR BUILDER SHALL ASSUME FULL RESPONSIBILITY FOR ELECTRICAL POWER COSTS AND REPAIR COSTS DUE TO VANDALISM, THEFT, OR CONSTRUCTION.
8. SAFE WIRING LABELS

   THE CONTRACTOR IS ADVISED THAT SAFE WIRING LABELS REQUIRED BY LABOR AND INDUSTRIES SHALL APPLY ON THIS PROJECT. (ELECTRICAL INSPECTION STICKER)
9. GUARANTEE

   THE CONTRACTOR SHALL SURRENDER TO THE CITY OF PUYALLUP ANY GUARANTEE OR WARRANTY ACQUIRED BY HIM AS A NORMAL TRADE PRACTICE IN CONNECTION WITH THE PURCHASE OF ANY MATERIALS OR ITEMS USED IN THE CONSTRUCTION OF THE ILLUMINATION.
10. LOCATION

    SEE CITY STANDARD SECTION 01.01 ROADWAY DESIGN.

CITY OF PUYALLUP
DEVELOPMENT ENGINEERING and PUBLIC WORKS DEPARTMENTS

STREET LIGHT SPECIFICATIONS (CONT.)

DRAWN BY	CHECKED BY	APPROVED BY	REVISED BY	CITY STANDARD
JIM ERWIN-SVOBODA	LINDA LIAN	COLLEEN HARRIS	LINDA LIAN	01.05.02
FILE NAME F:\DWG\COMMON\STDS\CITY\2009\01_STR\01.05\01.05.02		DATE APPROVED 07/01/2009	DATE REVISED 02/25/2015	SCALE 1:1

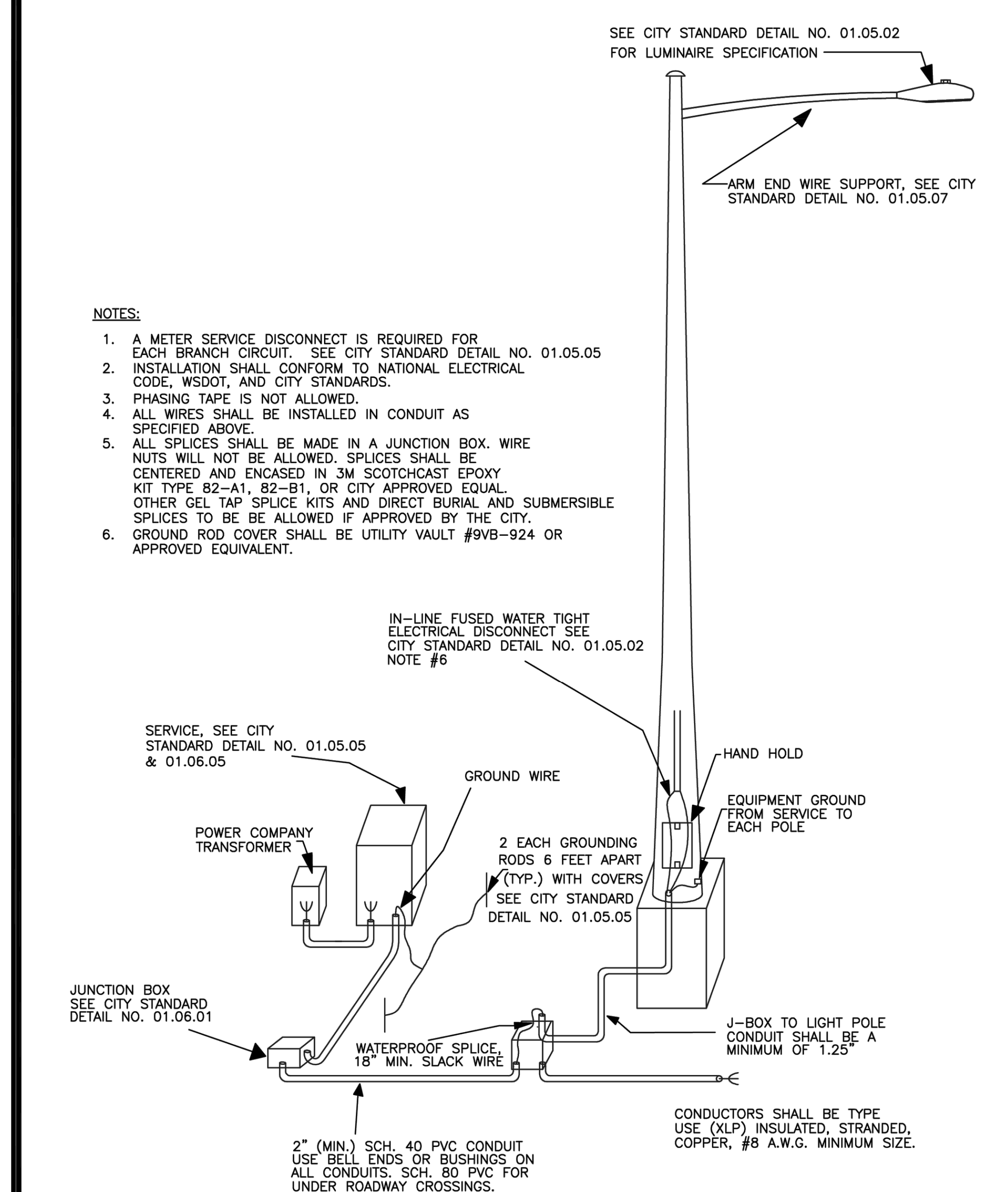

NOTES:

1. A METER SERVICE DISCONNECT IS REQUIRED FOR EACH BRANCH CIRCUIT. SEE CITY STANDARD DETAIL NO. 01.05.05
2. INSTALLATION SHALL CONFORM TO NATIONAL ELECTRICAL CODE, WSDOT, AND CITY STANDARDS.
3. PHASING TAPE IS NOT ALLOWED.
4. ALL WIRES SHALL BE INSTALLED IN CONDUIT AS SPECIFIED ABOVE.
5. ALL SPLICES SHALL BE MADE IN A JUNCTION BOX. WIRE NUTS WILL NOT BE ALLOWED. SPLICES SHALL BE CENTERED AND ENCASED IN 3M SCOTCHCAST EPOXY KIT TYPE 82-A1, 82-B1, OR CITY APPROVED EQUAL. OTHER GEL TAP SPLICE KITS AND DIRECT BURIAL AND SUBMERSIBLE SPLICES TO BE BE ALLOWED IF APPROVED BY THE CITY.
6. GROUND ROD COVER SHALL BE UTILITY VAULT #9VB-924 OR APPROVED EQUIVALENT.

CITY OF PUYALLUP
DEVELOPMENT ENGINEERING and PUBLIC WORKS DEPARTMENTS

TYPICAL STREET LIGHT INSTALLATION

DRAWN BY	CHECKED BY	APPROVED BY	REVISED BY	CITY STANDARD
JIM ERWIN-SVOBODA	LINDA LIAN	COLLEEN HARRIS	LINDA LIAN	01.05.03
FILE NAME F:\DWG\COMMON\STDS\CITY\2009\01_STR\01.05\01.05.03		DATE APPROVED 07/01/2009	DATE REVISED 02/25/2015	SCALE 1:5

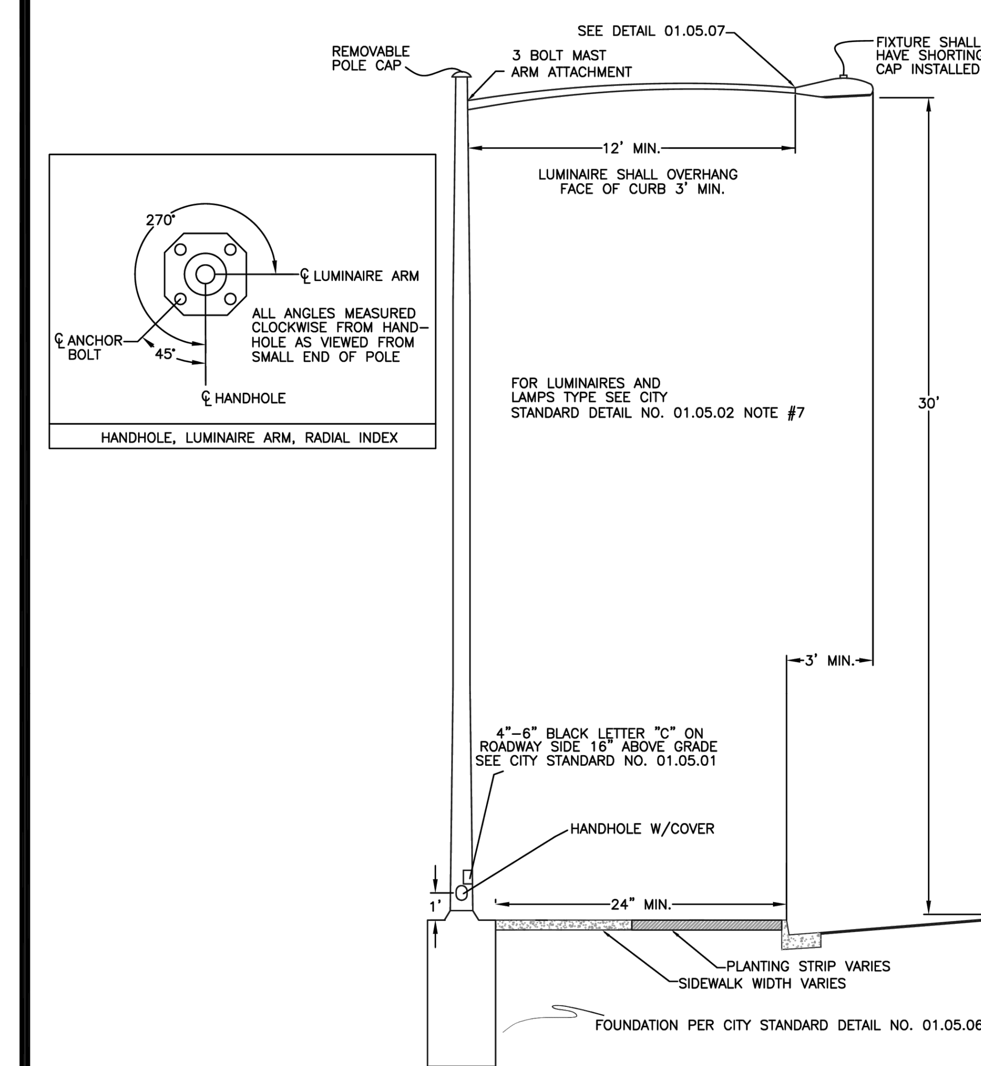

NOTE:

1. IT SHALL BE THE CONTRACTOR'S RESPONSIBILITY TO COORDINATE THE INSTALLATION OF THE STREET LIGHT SYSTEM WITH ALL UTILITIES, PRIVATE AND PUBLIC, TO AVOID SCHEDULE AND LOCATION CONFLICTS.
2. FOR RESIDENTIAL STREET LIGHTING THE CONTRACTOR SHALL BE RESPONSIBLE TO INSTALL ONE METER FOR THE PLAT'S LIGHTING SYSTEM PER PUGET SOUND ENERGY REQUIREMENTS. ON VERY LARGE PLAT'S PUGET SOUND ENERGY MAY REQUIRE MORE THAN ONE METER.
3. LUMINAIRE TO BE FLAT LENS GLASS WITH CUT OFF. 150W FOR SIGNALIZED INTERSECTIONS. 150W OR 200W FOR COMMERCIAL AREA AND 100W FOR RESIDENTIAL.

CITY OF PUYALLUP
DEVELOPMENT ENGINEERING and PUBLIC WORKS DEPARTMENTS

STREET LIGHT

DRAWN BY	CHECKED BY	APPROVED BY	REVISED BY	CITY STANDARD
JIM ERWIN-SVOBODA	LINDA LIAN	COLLEEN HARRIS	Linda Lian	01.05.04
FILE NAME F:\DWG\COMMON\STDS\CITY\2009\01_STR\01.05\01.05.04		DATE APPROVED 07/01/2009	DATE REVISED 04/04/2013	SCALE 1:5

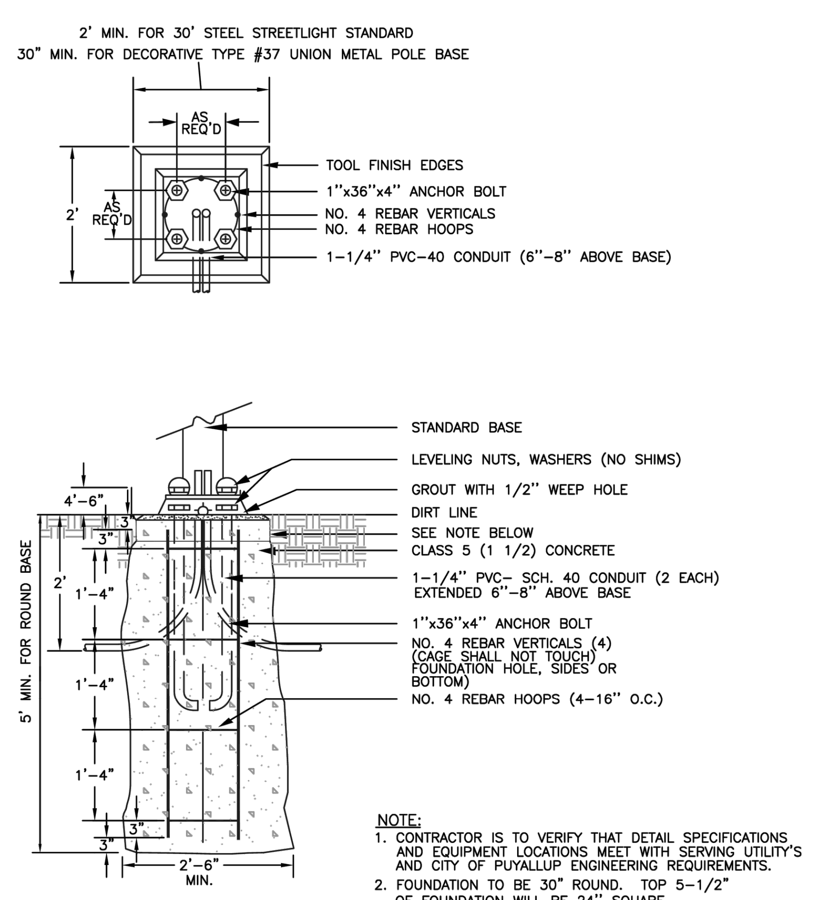

NOTE:

1. CONTRACTOR IS TO VERIFY THAT DETAIL SPECIFICATIONS AND EQUIPMENT LOCATIONS MEET WITH SERVING UTILITY'S AND CITY OF PUYALLUP ENGINEERING REQUIREMENTS.
2. FOUNDATION TO BE 30" ROUND. TOP 5-1/2" OF FOUNDATION WILL BE 24" SQUARE.

TEMPLATE FOR ANCHOR BOLT CIRCLE WILL BE A SINGLE PIECE OF 3/4" PLYWOOD WITH 4 BOLT HOLES TO FORM A BOLT CIRCLE OF 11-1/2" TO MATCH POLE MANUFACTURE'S BASE DESIGN.

LOWER LEVELING NUTS SHOULD BE CLOSE TO CONCRETE (ABOUT 1") TO PREVENT EXCESSIVE STRESSES IN THE ANCHOR BOLTS CAUSED BY TORSIONAL FORCES IN THE POLE. ANCHOR BOLTS WILL EXTEND ABOVE TOP NUT, 2 THREADS MINIMUM AND 5/8" MAXIMUM.

CITY OF PUYALLUP
DEVELOPMENT ENGINEERING and PUBLIC WORKS DEPARTMENTS

CONCRETE STREETLIGHT FOUNDATION TYPICAL

DRAWN BY	CHECKED BY	APPROVED BY	REVISED BY	CITY STANDARD
JIM ERWIN-SVOBODA	LINDA LIAN	COLLEEN HARRIS	XXXX	01.05.06
FILE NAME F:\DWG\COMMON\STDS\CITY\2009\01_STR\01.05\01.05.06		DATE APPROVED 07/01/2009	DATE REVISED XX/XX/XX	SCALE 1:2

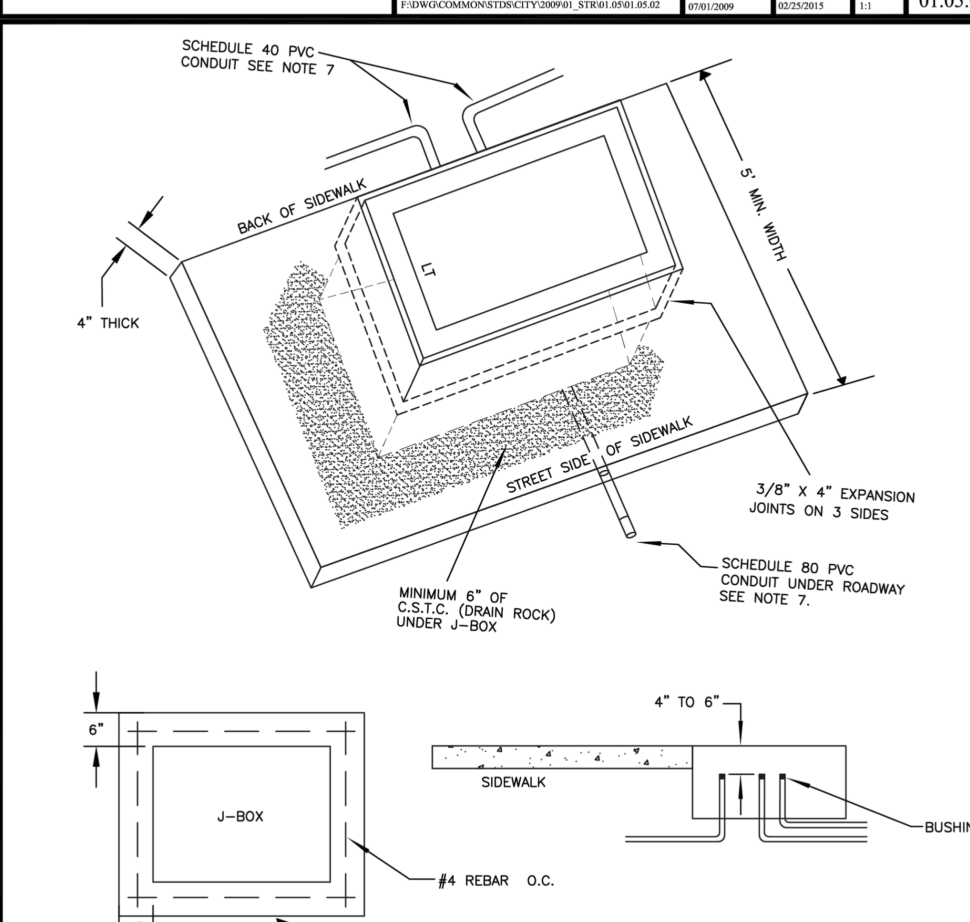

NOTES:

1. SEE W.S.D.O.T. STANDARD PLAN J-40.10-03 FOR J-BOX TYPE AND SIZE.
2. ALL LIDS SHALL BE GALVANIZED STEEL AND MARKED WITH AN "LT" OR "TS" PER W.S.D.O.T. STANDARD PLAN J-40.10-03. NON-SLIP SURFACE TREATMENT SHALL BE MEBAC1 OR SlipNOT #3.
3. TYPE III SHALL BE DUAL HINGED
4. IF NO SIDEWALK EXISTS, A CONCRETE COLLAR SHALL BE CONSTRUCTED 6" THICK, 6" WIDE, COMPLETELY SURROUNDING THE J-BOX WITH ONE #4 REBAR ON CENTER EACH SIDE AND TIED AT CORNERS. CLASS 5 (1 1/2) CONCRETE SHALL BE USED. BY PERMISSION, COLLAR MAY ENCOMPASS JUNCTION BOX AND STREET LIGHT. PREFERRED LOCATION OF JUNCTION BOX SHOULD NOT BE IN THE SIDEWALK, BUT RATHER AT THE BACK OF SIDEWALK WITH 3-SIDED COLLAR.
5. CONDUIT RUNS SHALL NOT EXCEED 195 FEET BETWEEN JUNCTION BOXES.
6. JUNCTION BOX SHALL BE LOCATED WITHIN 10 FEET OF EACH LUNIMAIRE POLE AND AT ROAD CROSSING.
7. CONDUIT MATERIAL SHALL BE AS SPECIFIED IN WSDOT STANDARD SPECIFICATION 8-20.3(5) OR AS MODIFIED ON SPECIAL PROVISIONS.
8. STREET LIGHT JUNCTION BOXES SHALL BE WELDED SHUT, 2'-2" LONG WELDS MIN., IMMEDIATELY AFTER L & I AND CITY INSPECTIONS TO HELP PREVENT WIRE THEFT. OTHER THEFT PREVENTION METHODS MAY BE USED IF APPROVED BY THE CITY.

CITY OF PUYALLUP
DEVELOPMENT ENGINEERING and PUBLIC WORKS DEPARTMENTS

JUNCTION BOX

DRAWN BY	CHECKED BY	APPROVED BY	REVISED BY	CITY STANDARD
JIM ERWIN-SVOBODA	LINDA LIAN	COLLEEN HARRIS	LINDA LIAN	01.06.01
FILE NAME F:\DWG\COMMON\STDS\CITY\2009\01_STR\01.06\01.06.01		DATE APPROVED 07/01/2009	DATE REVISED 11/18/2014	SCALE 1:2

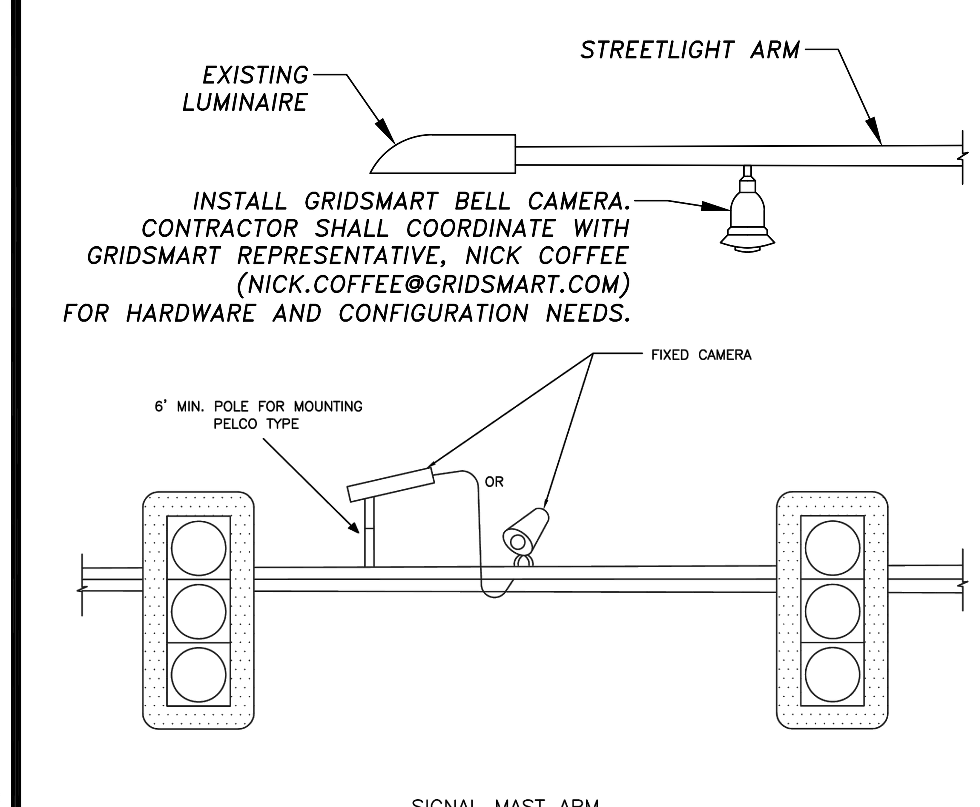

SIGNAL MAST ARM

NOTES:

1. CAMERA PLACEMENT SHALL BE SO CAMERA LINES UP WITH THE LANE LINE BETWEEN THE LEFT TURN POCKET AND THE THRU LANE.

CITY OF PUYALLUP
DEVELOPMENT ENGINEERING and PUBLIC WORKS DEPARTMENTS

VIDEO CAMERA DETECTION

DRAWN BY	CHECKED BY	APPROVED BY	REVISED BY	CITY STANDARD
JIM ERWIN-SVOBODA	LINDA LIAN	COLLEEN HARRIS	Linda Lian	01.06.07
FILE NAME F:\DWG\COMMON\STDS\CITY\2009\01_STR\01.06\01.06.07		DATE APPROVED 07/01/2009	DATE REVISED 05/23/2012	SCALE 1:2

APPROVED

BY ______________________
CITY OF PUYALLUP
DEVELOPMENT ENGINEERING

DATE ______________________

NOTES: THIS APPROVAL IS VOID AFTER 180 DAYS FROM APPROVAL DATE.
THE CITY WILL NOT BE RESPONSIBLE FOR ERRORS AND/OR OMISSIONS ON THESE PLANS.
FIELD CONDITIONS MAY DICTATE CHANGES TO THESE PLANS AS DETERMINED BY THE DEVELOPMENT ENGINEERING MANAGER.

△	REVISION	DATE	BY

DESIGNED BY: BVL/SSO
DRAWN BY: SSO
APPROVED BY: TDR

ISSUE DATE: 04/29/2024
JOB NO.: TENW #2022-311
DRAWING FILE NO.:

TREVIN D. ROLETTO, STATE OF WASHINGTON, 41861, REGISTERED PROFESSIONAL ENGINEER
04/29/2024

TENW
Transportation Engineering NorthWest
Transportation Planning | Design | Traffic Impact & Operations
11400 SE 8th Street, Suite 200, Bellevue, WA 98004 | Office (425) 889-6747
Project Contact: Trevin Roletto, P.E.
Phone: 425-250-0583

FORTRESS INVESTMENT GROUP
11611 SAN VICENTE BLVD
10TH FLOOR
LOS ANGELES, CA 90049

FORTRESS PUYALLUP

ILLUMINATION DETAILS

DRAWING NO.: IL-02

SHEET NO.: 36 OF 46 SHEETS

CODE LEGEND

- TYPE Ia - VISUAL BARRIER
- TYPE Ic - RESIDENTIAL SCREEN
- TYPE Ic - VISUAL BARRIER
- TYPE Id - VISUAL BARRIER
- TYPE IV - INTERNAL PARKING LOT LANDSCAPE
- SLD-01 - BLANK WALL LANDSCAPING
- LOADING AREA BUFFER
- RIGHT OF WAY

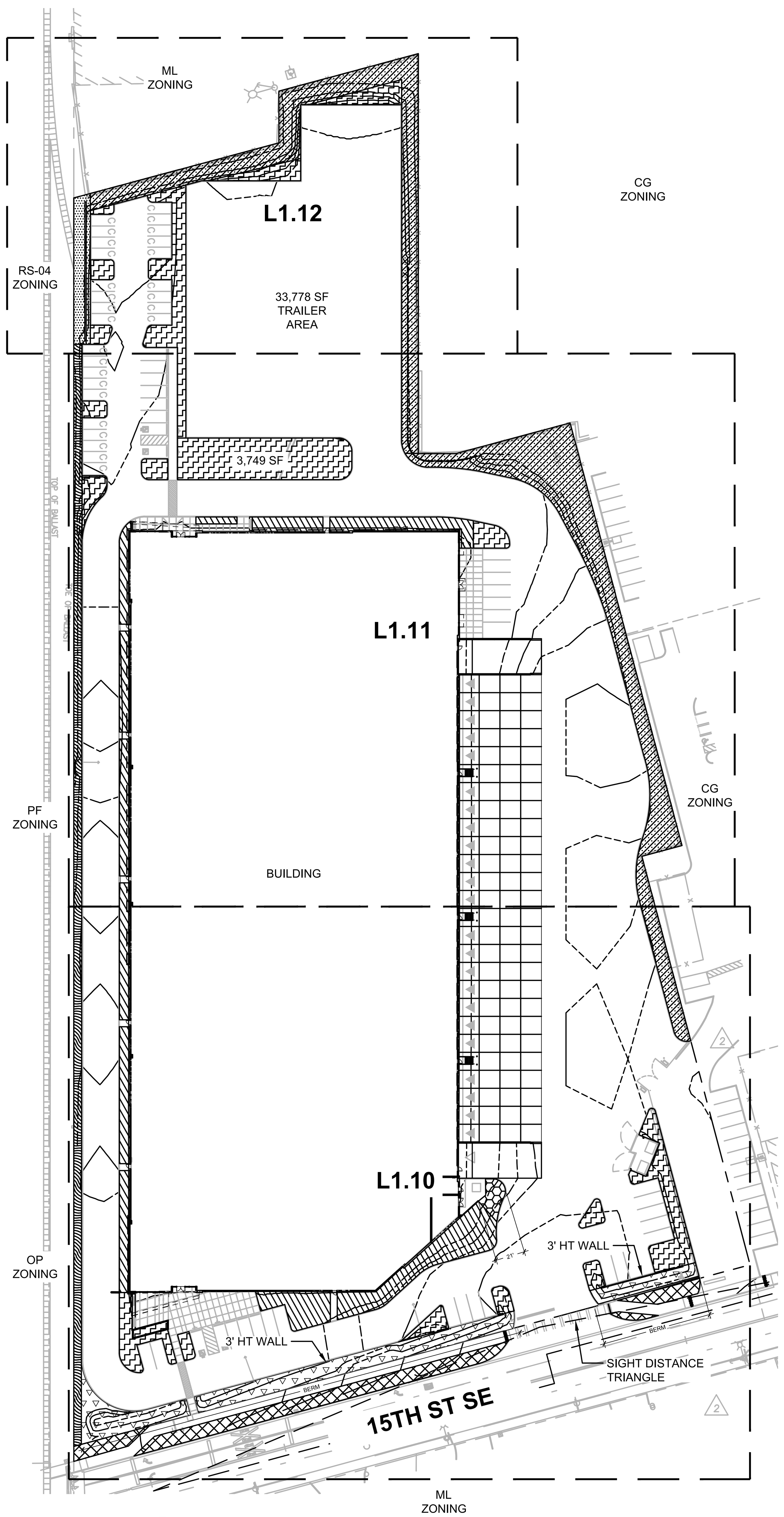

1 L0.01 CODE MAP

60 0 30 60 120 240 (IN FEET) 1 inch = 60 ft.

PLANT SCHEDULE

* DENOTES PUGET SOUND NATIVE PLANT ** DENOTES PNW NATIVE CULTIVAR

SYMBOL	BOTANICAL / COMMON NAME	SIZE		QTY
TREES				
	CALOCEDRUS DECURRENS INCENSE CEDAR CLASS II TREE (50' H X 15' W)	8' HT. MIN. B&B		2
	CEDRUS DEODARA DEODAR CEDAR	6' HT. MIN.		15
	CHAMAECYPARIS OBTUSA HINOKI FALSE CYPRESS CLASS III TREE (50' H X 15' W)	8' HT. MIN. B&B		33
	FAGUS SYLVATICA 'TRICOLOR' TRICOLOR EUROPEAN BEECH CLASS IV TREE (60' X 45')	2" CAL. B&B		3
	GLEDITSIA TRIACANTHOS INERMIS 'DRAVES' STREET KEEPER® HONEY LOCUST CLASS II TREE (45' H X 20' W)	2" CAL., B&B		1
	LIRIODENDRON TULIPIFERA TULIP POPLAR CLASS IV TREE (60' H X 35' W)	2" CAL., B&B		4
	OXYDENDRUM ARBOREUM SOURWOOD TREE CLASS III TREE (30' X 15')	2" CAL. B&B		5
	PICEA OMORIKA SERBIAN SPRUCE CLASS III TREE (50' H X 20' W)	8' HT. MIN. B&B		26
	PINUS NIGRA AUSTRIAN PINE CLASS IV TREE (50' X 25')	6' HT. MIN. B&B		12
	PINUS PONDEROSA PONDEROSA PINE CLASS IV TREE (100' X 35')	6' HT. MIN.		3
	QUERCUS PALUSTRIS 'PRINGREEN' GREEN PILLAR® PIN OAK CLASS II TREE (45' H X 15' W)	2" CAL., B&B		4
	QUERCUS X 'CRIMSCHMIDT' CRIMSON SPIRE™ OAK CLASS II TREE (45' H X 15' W)	2" CAL. B&B		2
	TILIA TOMENTOSA 'STERLING' STERLING SILVER LINDEN CLASS III TREE (45' H X 30' W)	2" CAL. B&B		9
	ULMUS AMERICANA 'VALLEY FORGE' VALLEY FORGE AMERICAN ELM CLASS IV TREE (80' H X 60' W)	2" CAL. B&B		4
	ZELKOVA SERRATA 'VILLAGE GREEN' SAWLEAF ZELKOVA CLASS III TREE (40' H X 40' W)	2" CAL., B&B		5
EXISTING				
	EXISTING CONIFER TREE TO REMAIN	---		6
	EXISTING DECIDUOUS TREE TO REMOVE	---		2

SYMBOL	BOTANICAL / COMMON NAME	SIZE	SPACING	QTY
SHRUBS				
	ARBUTUS UNEDO 'COMPACTA' COMPACT STRAWBERRY TREE	5 GAL.	60" o.c.	71
	CORNUS STOLONIFERA 'KELSEYI' ** KELSEY DOGWOOD	3 GAL.	24" o.c.	380
	GAULTHERIA SHALLON * SALAL	3 GAL.	30" o.c.	289
	ILEX CRENATA 'SKYPENCIL' SKYPENCIL JAPANESE HOLLY	4' HT. MIN.	48" o.c.	43
	JUNIPERUS SCOPULORUM 'SKYROCKET' SKYROCKET JUNIPER	8' HT. MIN.	48" o.c.	28
	MAHONIA AQUIFOLIUM * OREGON GRAPE	5 GAL. 48" HT. MIN.	48" o.c.	183
	NANDINA DOMESTICA 'GULF STREAM' GULF STREAM HEAVENLY BAMBOO	3 GAL.	36" o.c.	48
	NANDINA DOMESTICA 'LEMON LIME' LEMON LIME NANDINA	3 GAL.	42" o.c.	20
	PIERIS JAPONICA MOUNTAIN FIRE MOUNTAIN FIRE JAPANESE PIERIS	3 GAL.	60" o.c.	74
	RHODODENDRON MACROPHYLLUM * PACIFIC RHODODENDRON	5 GAL.	60" o.c.	6
	RIBES SANGUINEUM * RED FLOWERING CURRANT	5 GAL.	48" o.c.	103
	SYMPHORICARPOS ALBUS * COMMON WHITE SNOWBERRY	3 GAL.	48" o.c.	70
	THUJA OCCIDENTALIS 'SMARAGD' EMERALD GREEN ARBORVITAE	12' HT. MIN.	48" o.c.	66
	THUJA OCCIDENTALIS 'SMARAGD' EMERALD GREEN ARBORVITAE	6' HT. MIN.	36" o.c.	266
	THUJA OCCIDENTALIS 'SMARAGD' EMERALD GREEN ARBORVITAE	8' HT. MIN.	48" o.c.	135
GROUNDCOVER				
	PENNISETUM ALOPECUROIDES 'HAMELN' HAMELN FOUNTAIN GRASS	1 GAL.	24" o.c.	92
VINES				
	LONICERA X 'MANDARIN' MANDARIN HONEYSUCKLE	1 GAL.	24" o.c.	38

GROUND COVERS			
CALAMAGROSTIS X ACUTIFLORA 'KARL FOERSTER' KARL FOERSTER FEATHER REED GRASS	1 GAL.	24" o.c.	1,509 SF
CAREX OBNUPTA * SLOUGH SEDGE	1 GAL.	18" o.c.	541 SF
MAHONIA REPENS * CREEPING MAHONIA	1 GAL.	18" o.c.	1,775 SF
POLYSTICHUM MUNITUM * WESTERN SWORD FERN	1 GAL.	24" o.c.	3,501 SF
ROCK MULCH MAINTENANCE BAND 1"-2" ROUND ROCK	---		1,347 SF
RUBUS CALYCINOIDES 'EMERALD CARPET' EMERALD CARPET CREEPING BRAMBLE	1 GAL.	18" o.c.	10,006 SF
SUNMARK SEEDS – NATIVE ECOTURF * FESTUCA RUBRA, BOUTELOUA GRACILIS, BUCHOLE DACTYLOIDES, KOELERIA MACRANTHA, TRIFOLIUM FRAGIFERUM	8LBS/1000SF		3,231 SF
UNDERSTORY BLEND 50% MAHONIA REPENS*, 50% POLYSTICHUM MUNITUM*	1 GAL.	24" o.c.	6,326 SF

LANDSCAPE NOTES

GENERAL

1. CONTRACTOR SHALL CONFIRM ALL EXISTING CONDITIONS PRIOR TO COMMENCING WORK.
2. CALL BEFORE YOU DIG. CONTRACTOR SHALL VERIFY INVERT ELEVATIONS OF ALL UNDERGROUND UTILITIES AND NOTIFY LANDSCAPE ARCHITECT IF THERE ARE ANY DISCREPANCIES WITH PLANTING ROOT ZONES. TO REQUEST LOCATES FOR PROPOSED EXCAVATION CALL 1-800-424-5555 (OR 811) IN WASHINGTON.
3. NOTIFY THE OWNER OR OWNER'S REPRESENTATIVE OF ANY DISCREPANCIES OR CONFLICTS WITH EXISTING CONDITIONS PRIOR TO COMMENCEMENT OF ANY WORK.
4. LOCATION OF EXISTING TREES SHALL BE VERIFIED IN THE FIELD BY THE CONTRACTOR PRIOR TO COMMENCEMENT OF WORK.
5. VEGETATION PROTECTION SHALL BE INSTALLED PRIOR TO ANY WORK COMMENCING. STACKING, STORING, STOCKPILING, OR ACCUMULATION OF GOODS OR MATERIALS IS PROHIBITED IN THE ROOT PROTECTION ZONE. SEE TREE PROTECTION DETAIL 9/L5.13 AND PUYALLUP APPENDIX 20 FOR TREE PROTECTION STANDARDS ON CONSTRUCTION SITES.
6. DAMAGE TO EXISTING CONCRETE CURB, ASPHALT PAVING, OR OTHER STRUCTURE SHALL BE REPAIRED OR REPLACED TO PRE CONSTRUCTION CONDITIONS.
7. CONTRACTOR SHALL COORDINATE WITH THE OWNER ANY DISRUPTION TO VEHICULAR CIRCULATION PRIOR TO COMMENCEMENT OF ANY WORK.

IRRIGATION

1. UNLESS OTHERWISE INDICATED, ALL NEW LANDSCAPE AREAS TO BE IRRIGATED WITH A FULLY AUTOMATIC UNDERGROUND IRRIGATION SYSTEM. PROVIDE LOOP SYSTEM FOR OPTIMUM EFFICIENCY.
2. CONTRACTOR SHALL SUBMIT SHOP DRAWINGS (IRRIGATION PLANS) TO LANDSCAPE ARCHITECT PRIOR TO CONSTRUCTION. DRAWINGS TO INDICATE HEAD TYPE, GALLONS PER MINUTE, LATERAL LINES, AND BE AT MINIMUM SCALE OF 1"=20'
3. CONTRACTOR TO DETERMINE STATIC WATER PRESSURE AT THE P.O.C. PRIOR TO PREPARING SHOP DRAWINGS.
4. CONTRACTOR SHALL ESTABLISH MINIMUM PRESSURE AND MAXIMUM DEMAND REQUIREMENTS FOR IRRIGATION SYSTEM DESIGN, AND PROVIDE INFORMATION IN AN IRRIGATION SCHEDULE.
5. IRRIGATION SYSTEM AS DESIGNED AND INSTALLED SHALL PERFORM WITHIN THE TOLERANCES AND SPECIFICATIONS OF THE SPECIFIED MANUFACTURERS.
6. SYSTEM SHALL BE DESIGNED TO SUPPLY MANUFACTURER'S SPECIFIED MINIMUM OPERATING PRESSURE TO FARTHEST EMITTER FROM WATER METER.
7. SYSTEM SHALL PROVIDE HEAD TO HEAD COVERAGE WITHOUT OVERSPRAY ONTO BUILDING, FENCES, SIDEWALKS, PARKING AREAS, OR OTHER NON-VEGETATED SURFACES.
8. ALL IRRIGATION PIPE MATERIAL AND INSTALLATION SHALL CONFORM TO APPLICABLE CODE FOR PIPING AND COMPONENT REQUIREMENTS.
9. PROVIDE SLEEVING AT ALL AREAS WHERE PIPE TRAVELS UNDER CONCRETE OR HARD SURFACING.
10. VALVES SHALL BE WIRED AND INSTALLED PER MANUFACTURER'S RECOMMENDED INSTALLATION PROCEDURES AND CONNECTED TO THE IRRIGATION CONTROLLER.
11. REFER TO CIVIL DETAILS AND DETAILS ON L5.12 FOR POINT OF CONNECTION AND BACKFLOW PREVENTION INFORMATION.
12. CONTROLLER TO BE MOUNTED ON BUILDING EXTERIOR. GENERAL CONTRACTOR TO COORDINATE LOCATION WITH OWNER'S REPRESENTATIVE.
13. ZONE THE FOLLOWING AREAS SEPARATELY: TEMPORARY AREAS, PERMANENT LANDSCAPE AREAS, AND TREES.
14. QUICK COUPLERS TO BE PLACED EVERY 300 LINEAR FEET MAX.
15. IRRIGATION SHALL BE WINTERIZED THROUGH LOW PRESSURE, HIGH VOLUME AIR BLOWOUT CONNECTION THROUGH QUICK COUPLER.
16. THE SYSTEM SHALL BE GRAVITY DRAINED. THE CONTRACTOR SHALL PROVIDE APPROPRIATE MANUAL DRAINS AT LOW POINTS.

SHEET INDEX

L0.01	LANDSCAPE GENERAL INFORMATION	L5.10	SITE DETAILS
L1.10	PLANTING PLAN EAST	L5.11	SOIL DETAILS
L1.11	PLANTING PLAN CENTRAL	L5.12	IRRIGATION DETAILS
L1.12	PLANTING PLAN WEST	L5.13	PLANTING DETAILS
L1.20	MATERIALS AND LAYOUT PLAN	L5.14	STREET PLANTING DETAILS

TABLE OF ABBREVIATIONS

ANSI	AMERICAN NATIONAL STANDARDS INSTITUTE	GAL	GALLON
		MIX	MIXTURE
B&B	BALL AND BURLAP	POC	POINT OF CONNECTION
CAL	CALIPER	PVC	POLY VINYL CHLORIDE

SITE INFORMATION

JURISDICTION	PUYALLUP, WA
STORMWATER	PUYALLUP 2015
ZONE	ML
SITE AREA	341,226 SF (7.82 AC)
TOTAL LANDSCAPE AREA	52,676 SF
TOTAL COMPOST AMENDED TOPSOIL (8" DEPTH)	1,301 CY

NATIVE PLANT MATERIAL
(MIN 50% OF SHRUBS AND GROUND COVER)

TOTAL SHRUBS	1,679 SHRUBS (100%)
NATIVE SHRUBS	1,021 SHRUBS (60.8%)
TOTAL GROUND COVER	28,553 SF (100%)
NATIVE GROUND COVER	15,365 SF (53.8%)

TYPE Ia - BUFFER

CONIFER TREES (CLASS III OR IV)	
BUFFER WIDTH (15 FT MIN)	15' AVERAGE
HEDGE HEIGHT (6 FT MIN)	6' HT MIN
WALL OR FENCE ALONG PROPERTY LINE (6' HT MIN)	8' HT FENCE^

TYPE Ic - RESIDENTIAL SCREEN

TREES (CLASS III OR IV, 45 FT HT MIN)*	
EVERGREEN HEDGE (6 FT HT MIN, 5' OC MAX)	6 FT HT
WALL (6 FT HT MIN)	
BUFFER WIDTH (<15 FT)	8 FT HT FENCE^

*PER CITY REQUEST TYPE Ic ADJACENT TO THE RAILROAD WILL EXCLUDE TREES TO MINIMIZE CANOPY OVERHANG.
^ BLACK VINYL COATED CHAIN LINK FENCE WITH CLOSED MESH POLY FENCE PRIVACY SCREEN.

TYPE Ic - VISUAL BARRIER

TREES (CLASS III OR IV)**	
EVERGREEN HEDGE (6' HT MIN, 5' OC MAX)	6 FT HT
BUFFER WIDTH (6' MIN)	6 FT

**PER CITY REQUEST TYPE Ic ADJACENT TO THE RAILROAD WILL EXCLUDE TREES TO MINIMIZE CANOPY OVERHANG.

TYPE Id - FRONTAGE
TREES (CLASS III OR IV, EVERGREEN)
EVERGREEN HEDGE (6 FT HT MIN, 5 FT OC MAX)
BUFFER WIDTH (12 FT MIN)
WALL (3 FT HT MIN)
BERM (3:1 SLOPE)

TYPE IV - INTERNAL PARKING LOT LANDSCAPE

OVERALL SITE AREA	341,226 SF (100%)	
PAVED AREA	157,746 SF (100%)	
LANDSCAPE AREA (10% MIN)	18,063 SF (11.5%)	
TREES REQUIRED (2 PER 500 SF)	72 TREES REQ	
LANDSCAPE SUB AREAS	AREA	TREES
PARKING LOT LANDSCAPE AREA	9,083 SF	36 TREES
TRAILER LANDSCAPE AREA	3,749 SF	15 TREES
SLD-01 LANDSCAPE AREA	5,231 SF	21 TREES***
TOTAL TREES	72 TREES (100%)	
TOTAL CONIFER TREES (50% MIN)	38 TREES (52.7%)	

*** 14 VERTICAL TRELLISES AND 28 COLUMNAR EVERGREEN SHRUBS (15-20' HT AT MATURITY) WERE USED TO COMPLY WITH SLD-01 BLANK WALL SCREENING ALONG THE SOUTHERN WALL OF THE BUILDING (THE 3,987 SF OF THIS AREA WAS EXCLUDED FROM THE TREE TABLE AREA).

TRAILER AREA****

PAVED AREA	33,012 SF (100%)
LANDSCAPE AREA (10% MIN)	3,749 SF (11.4%)

**** IN LIEU OF PROVIDING ISLANDS WITHIN THE TRAILER AREA, AN EQUIVALENT AREA OF LANDSCAPE IS PROVIDED ADJACENT TO THE TRAILER AREA.

SLD-01 BLANK WALL LANDSCAPING

BLANK WALL SCREEN MITIGATION
STAFF IS SUPPORTIVE OF REDUCING THE BLANK WALL PLANTER WIDTH ALONG THE SOUTH SIDE OF THE BUILDING DEPENDENT UPON MITIGATION IN THE FORM OF CU-STRUCTURAL SOIL IN A TOTAL SOIL VOLUME EQUAL TO THAT WHICH WOULD HAVE BEEN PROVIDED IF THE FULL 15' PLANTER WIDTH HAD BEEN INSTALLED.

MITIGATION LENGTH	550 LF
STANDARD SOIL VOLUME (15' WIDE PLANTER X 8" DEPTH TOPSOIL X 550 LF)	204 CY OF SOIL
MITIGATION SOIL VOLUME	217 CY OF SOIL
(7' WIDE PLANTER X 8" D TOPSOIL X 550 LF)	95 CY OF SOIL
(3' WIDE CU STRUCTURAL SOIL X 24" D X 550 LF)	122 CY OF SOIL

LOADING AREA BUFFER	21 LF
PER PMC 20.26.400(3) & 20.26.500(1)	
TREES (1 PER 15')	1 TREE
SHRUBS (6' HT MIN)	6' FT HT

APPROVED
FINAL LANDSCAPE PLAN
BY: ______
PLANNING DIVISION
DATE: ______
NOTE: THIS APPROVAL IS VOID AFTER 1 YEAR FROM APPROVAL DATE.
THE CITY IS NOT RESPONSIBLE FOR ERRORS AND/OR OMISSIONS ON THESE PLANS. FIELD CONDITIONS MAY DICTATE CHANGES TO THESE PLANS AS DETERMINED BY THE PLANNING DIRECTOR, DESIGNEE OR PROJECT PLANNER.

M.
Architecture ■ Interiors
Planning ■ Engineering

Portland, OR 503.224.9560
Vancouver, WA 360.695.7879
Seattle, WA 206.749.9993
www.mcknze.com

MACKENZIE.
DESIGN DRIVEN I CLIENT FOCUSED

Client
CREF3 PUYALLUP OWNER LLC

11611 SAN VICENTE BLVD 10TH FLOOR LOS ANGELES CA 90049

Project
FORTRESS - PUYALLUP

240 15TH ST SE PUYALLUP, WA, 98372

STATE OF WASHINGTON NICOLE R. FERREIRA NO. 1606 EXP. 12.14.25 LICENSED LANDSCAPE ARCHITECT

© MACKENZIE 2024 ALL RIGHTS RESERVED
THESE DRAWINGS ARE THE PROPERTY OF MACKENZIE AND ARE NOT TO BE USED OR REPRODUCED IN ANY MANNER, WITHOUT PRIOR WRITTEN PERMISSION

REVISION SCHEDULE

Delta	Issued As	Issue Date
1	PLAN CHECK	12/07/2023
2	PLAN CHECK	02/28/2024
3	PLAN CHECK	07/22/2024

SHEET TITLE:
LANDSCAPE GENERAL INFORMATION

DRAWN BY: LJM
CHECKED BY: NRF
SHEET:
L0.01

JOB NO. **2220290.00**

CIVIL PERMIT 12/07/2023

222029000\DRAWINGS\LANDSCAPE\290-L0.01A.DWG:L0.01 NRF 07/22/24 17:29 1:1.00

MATCHLINE - SEE L1.11

BUILDING

(P) HYDRANT

CU-STRUCTURAL SOIL TO EXTEND ALONG SOUTH SIDE OF BUILDING FROM EDGE OF CURB TO 15' FROM EDGE OF BUILDING PER BLANK WALL SCREENING MITIGATION NOTED ON L0.01

(P) TRANSFORMER

(P) TRASH ENCLOSURE

(P) HYDRANT

CU-STRUCTURAL SOIL, SEE DETAIL 1/L5.11

(P) WALL

PIV, KEEP SHRUBS 3FT CLEAR

(P) BENCH (QTY 2)

(P) BIKE RACK (QTY 2)

(P) CU-STRUCTURAL SOIL, SEE DETAIL 1/L5.11

(P) SOIL CELLS, SEE DETAIL 4/L5.11

(P) SOIL CELLS, TYP, SEE DETAIL 5/L5.11

IRRIGATION POINT OF CONNECTION

(P) LIGHT POLE

SIGHT DISTANCE TRIANGLE

(P) SOIL CELLS, TYP, SEE DETAIL 5/L5.11

(P) STREET TREES, TYP, SEE DETAIL 1/L5.14

(E) HYDRANT

15TH ST SE

(P) LIGHT POLE

2 L1.10

REFERENCE NOTES

1. PLANT SIZE, SPACING, AND QUANTITY, SEE PLANT SCHEDULE L0.01
2. EXISTING TREE TO REMAIN. DO NOT DISTURB. PROTECT IN PLACE.
3. PROPOSED UTILITY BOX. AVOID PLANTING WITHIN DEFINED ACCESS ZONE.
4. CAREFULLY EXCAVATE SHRUB PITS IN VICINITY OF EXISTING TREES, WITHOUT DISTURBING TREE ROOTS.
5. COORDINATE SHRUB LAYOUT WITH EXISTING UTILITIES, REPORT CONFLICTS TO LANDSCAPE ARCHITECT.

PLANTING NOTES

1. A MINIMUM OF EIGHT (8") INCHES OF TOP SOIL, CONTAINING TEN PERCENT DRY WEIGHT IN PLANTING BEDS, AND 5% ORGANIC MATTER CONTENT IN TURF AREAS, AND A PH FROM 6.0 TO 8.0 OR MATCHING THE pH OF THE ORIGINAL UNDISTURBED SOIL. THE TOPSOIL LAYER SHALL HAVE A MINIMUM DEPTH OF EIGHT INCHES (8") EXCEPT WHERE TREE ROOTS LIMIT THE DEPTH OF INCORPORATION OF AMENDMENTS NEEDED TO MEET THE CRITERIA. SUB SOILS BELOW THE TOPSOIL LAYER SHOULD BE SCARIFIED AT LEAST 6 INCHES WITH SOME INCORPORATION OF THE UPPER MATERIAL TO AVOID STRATIFIED LAYERS, WHERE FEASIBLE. INSTALLATION OF THE EIGHT INCHES (8") OF TOP SOIL, AS DESCRIBED ABOVE, SHALL GENERALLY BE ACHIEVED BY PLACING FIVE INCHES (5") OF IMPORTED SANDY-LOAM TOP SOIL INTO PLANNED LANDSCAPE AREAS (SUB-BASE SCARIFIED FOUR INCHES (4") WITH A THREE-INCH (3") LAYER OF COMPOST TILLED INTO THE ENTIRE DEPTH.
2. ALL EXISTING TREES, PLANTS, AND ROOTS SHALL BE PROTECTED FROM DAMAGE FROM ANY CONSTRUCTION PREPARATION, REMOVAL OR INSTALLATION ACTIVITIES WITHIN AND ADJACENT TO PROJECT LIMITS.
3. SHRUBS ADJACENT TO PARKING AREAS SHALL BE PLANTED 2 FT MINIMUM AWAY FROM THE BACK OF CURB. SHRUBS AND GROUNDCOVER ALONG OTHER PAVEMENT EDGES SHALL BE PLANTED A MINIMUM OF ONE HALF THEIR ON CENTER SPACING AWAY FROM PAVEMENT EDGE.
4. ALL PLANT MATERIAL SHALL BE HEALTHY NURSERY STOCK, WELL BRANCHED AND ROOTED, FULL FOLIAGE, FREE FROM INSECTS, DISEASES, WEEDS, WEED ROT, INJURIES AND DEFECTS WITH NO LESS THAN MINIMUMS SPECIFIED IN AMERICAN STANDARDS FOR NURSERY STOCK, ANSI Z60.1-2004.TREES IN THE RIGHT OF WAY SHALL BE TALL ENOUGH TO BE LIMBED UP TO AT LEAST 7 FT ABOVE FINISHED GRADE OF SIDEWALK ABUTTING PLANTING AREA WHILE MAINTAINING ENOUGH BRANCHES TO SUPPORT HEALTHY GROWTH. AS THE TREE GROWS, MAINTAIN BRANCHES OVERREACHING THE FINISHED GRADE OF PUBLIC STREETS AT A HEIGHT OF 14 FT MIN.
5. DO NOT PLANT TREES ABOVE WATERLINES, UTILITIES, OR OTHER UNDERGROUND PIPING.
6. IF DISTURBANCE IS NECESSARY AROUND EXISTING TREES, CONTRACTOR SHALL PROTECT THE CROWN AND ALL WORK WITHIN THE TREE DRIPZONE SHALL BE LIMITED TO THE USE OF HAND TOOLS AND MANUAL EQUIPMENT ONLY.
7. REPLACE, REPAIR AND RESTORE DISTURBED LANDSCAPE AREAS DUE TO GRADING, TRENCHING OR OTHER REASONS TO PRE-CONSTRUCTION CONDITION AND PROVIDE MATERIAL APPROVED BY THE OWNER AND OWNER'S REPRESENTATIVE.
8. EXISTING AREAS PROPOSED FOR NEW PLANT MATERIAL SHALL BE CLEARED AND LEGALLY DISPOSED UNLESS SO NOTED.
9. A SOILS ANALYSIS, BY AN INDEPENDENT SOILS TESTING LABORATORY RECOGNIZED BY THE STATE DEPARTMENT OF AGRICULTURE, SHALL BE USED TO RECOMMEND AN APPROPRIATE PLANTING SOIL AND/OR SPECIFIED SOIL AMENDMENTS.
10. TOPSOIL SHALL BE AMENDED AS RECOMMENDED BY AN INDEPENDENT SOILS TESTING LABORATORY AND AS OUTLINED IN THE SPECIFICATION.
11. ALL PLANTING AREAS SHALL BE MULCHED WITH A UNIFORM FOUR (4") INCH LAYER OF ORGANIC COMPOST MULCH MATERIAL OR WOOD CHIPS OVER A PROPERLY CLEANED, AMENDED AND GRADED SUBSURFACE.

1 L1.10 PLANTING PLAN EAST

20 0 10 20 40 80 (IN FEET)
1 inch = 20 ft.

2 L1.10 SECTION - TYPE Id LANDSCAPE @ 25 YRS

3 FT HT WALL AND BERM

15' 10' 5' 0'

10 0 5 10 20 40 (IN FEET)
1 inch = 10 ft.

KEY MAP
SCALE: NTS

L1.12 L1.11 L1.10

APPROVED
FINAL LANDSCAPE PLAN
BY: _____
PLANNING DIVISION
DATE: _____
NOTE: THIS APPROVAL IS VOID AFTER 1 YEAR FROM APPROVAL DATE.
THE CITY IS NOT RESPONSIBLE FOR ERRORS AND/OR OMISSIONS ON THESE PLANS. FIELD CONDITIONS MAY DICTATE CHANGES TO THESE PLANS AS DETERMINED BY THE PLANNING DIRECTOR, DESIGNEE OR PROJECT PLANNER.

CIVIL PERMIT 12/07/2023

Architecture ▪ Interiors
Planning ▪ Engineering

Portland, OR
503.224.9560
Vancouver, WA
360.695.7879
Seattle, WA
206.749.9993
www.mcknze.com

MACKENZIE.
DESIGN DRIVEN | CLIENT FOCUSED

Client
CREF3 PUYALLUP OWNER LLC

11611 SAN VICENTE BLVD
10TH FLOOR
LOS ANGELES
CA 90049

Project
FORTRESS - PUYALLUP

240 15TH ST SE
PUYALLUP, WA,
98372

STATE OF WASHINGTON
NICOLE R. FERRERA
No. 16098 EXP. 12/14/25
LICENSED LANDSCAPE ARCHITECT

© MACKENZIE 2024
ALL RIGHTS RESERVED
THESE DRAWINGS ARE THE PROPERTY OF MACKENZIE AND ARE NOT TO BE USED OR REPRODUCED IN ANY MANNER, WITHOUT PRIOR WRITTEN PERMISSION

REVISION SCHEDULE

Delta	Issued As	Issue Date
1	PLAN CHECK	12/07/2023
2	PLAN CHECK	02/28/2024
3	PLAN CHECK	07/22/2024

SHEET TITLE:
PLANTING PLAN EAST

DRAWN BY: LJM
CHECKED BY: NRF

SHEET:
L1.10

JOB NO. 2220290.00

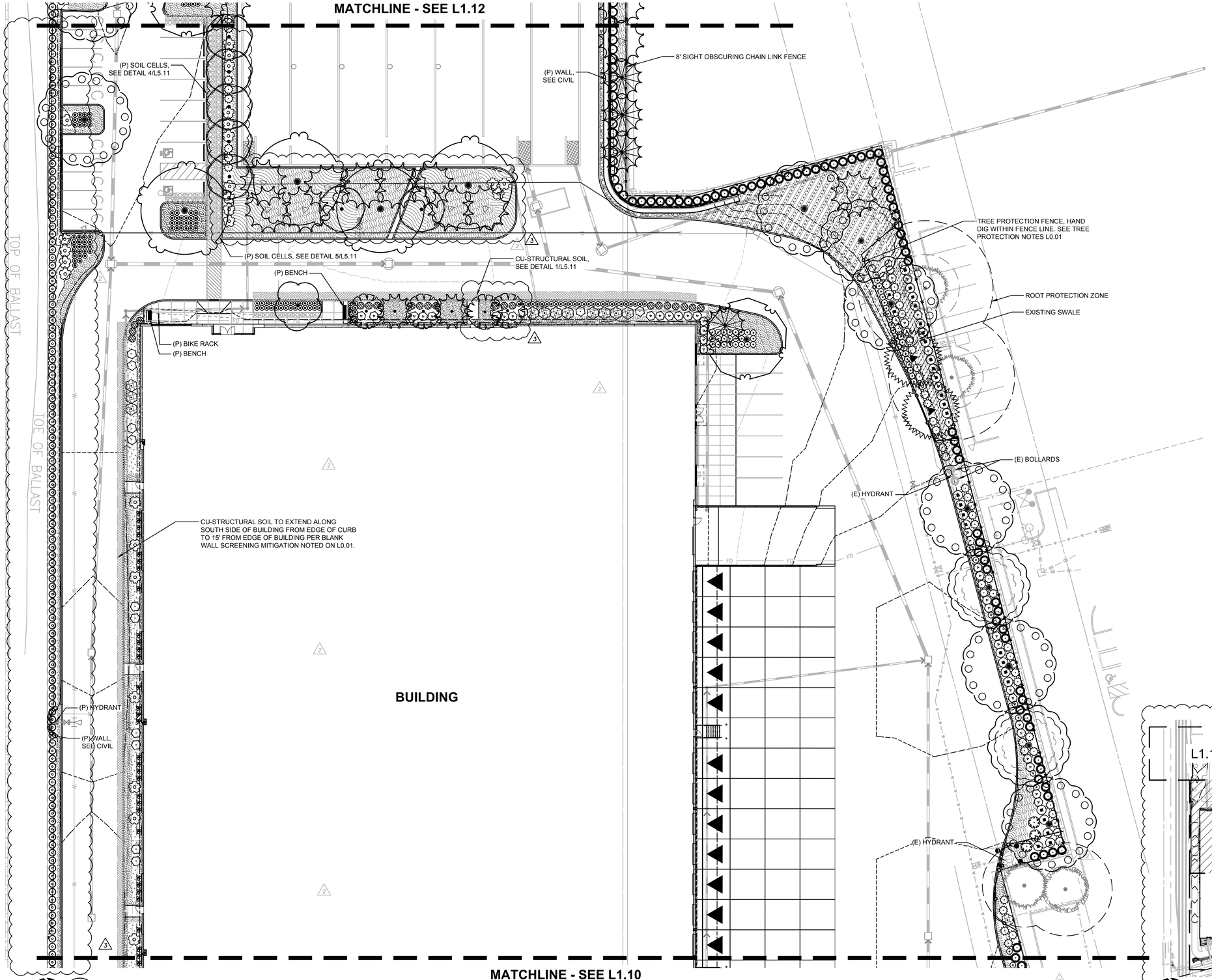

1 L1.11 PLANTING PLAN CENTRAL

20 0 10 20 40 80
(IN FEET)
1 inch = 20 ft.

REFERENCE NOTES

1. PLANT SIZE, SPACING, AND QUANTITY, SEE PLANT SCHEDULE L0.01
2. EXISTING TREE TO REMAIN. DO NOT DISTURB. PROTECT IN PLACE.
3. PROPOSED UTILITY BOX. AVOID PLANTING WITHIN DEFINED ACCESS ZONE.
4. CAREFULLY EXCAVATE SHRUB PITS IN VICINITY OF EXISTING TREES, WITHOUT DISTURBING TREE ROOTS.
5. COORDINATE SHRUB LAYOUT WITH EXISTING UTILITIES, REPORT CONFLICTS TO LANDSCAPE ARCHITECT.

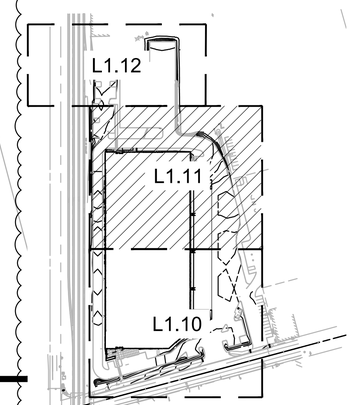

KEY MAP
SCALE: NTS

APPROVED
FINAL LANDSCAPE PLAN

BY: _____
PLANNING DIVISION

DATE: _____

NOTE: THIS APPROVAL IS VOID AFTER 1 YEAR FROM APPROVAL DATE.
THE CITY IS NOT RESPONSIBLE FOR ERRORS AND/OR OMISSIONS ON THESE PLANS. FIELD CONDITIONS MAY DICTATE CHANGES TO THESE PLANS AS DETERMINED BY THE PLANNING DIRECTOR, DESIGNEE OR PROJECT PLANNER.

CIVIL PERMIT 12/07/2023

Architecture ▪ Interiors
Planning ▪ Engineering

Portland, OR
503.224.9560
Vancouver, WA
360.695.7879
Seattle, WA
206.749.9993
www.mcknze.com

MACKENZIE
DESIGN DRIVEN | CLIENT FOCUSED

Client
CREF3 PUYALLUP OWNER LLC

11611 SAN VICENTE BLVD
10TH FLOOR
LOS ANGELES
CA 90049

Project
FORTRESS - PUYALLUP

240 15TH ST SE
PUYALLUP, WA,
98372

STATE OF WASHINGTON
NICOLE R. FERREIRA
NO. 1606 EXP. 12/14/25
LICENSED LANDSCAPE ARCHITECT

© MACKENZIE 2024
ALL RIGHTS RESERVED
THESE DRAWINGS ARE THE PROPERTY OF MACKENZIE AND ARE NOT TO BE USED OR REPRODUCED IN ANY MANNER, WITHOUT PRIOR WRITTEN PERMISSION

REVISION SCHEDULE

Delta	Issued As	Issue Date
1	PLAN CHECK	12/07/2023
2	PLAN CHECK	02/28/2024
3	PLAN CHECK	07/22/2024

SHEET TITLE:
PLANTING PLAN CENTRAL

DRAWN BY: LJM, AEZ, JWT
CHECKED BY: NRF
SHEET:
L1.11

JOB NO. 2220290.00

2220290.00 DRAWINGS LANDSCAPE\290-L0.01.DWG:L1.11 CAH 06/07/24 11:23 1:1.00

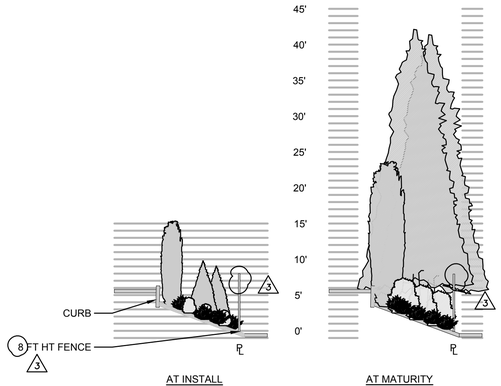

2 L1.12 SECTION A - TYPE 1a @ CURB

10 0 5 10 20 40
(IN FEET)
1 inch = 10 ft.

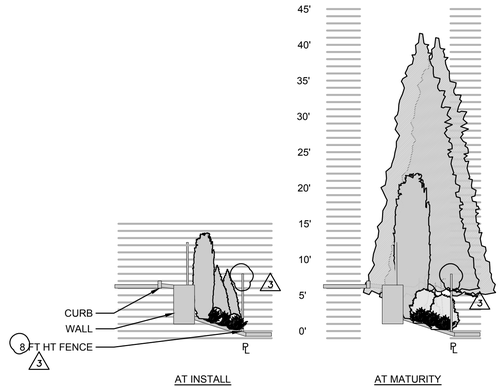

3 L1.12 SECTION B - TYPE 1a @ WALL

10 0 5 10 20 40
(IN FEET)
1 inch = 10 ft.

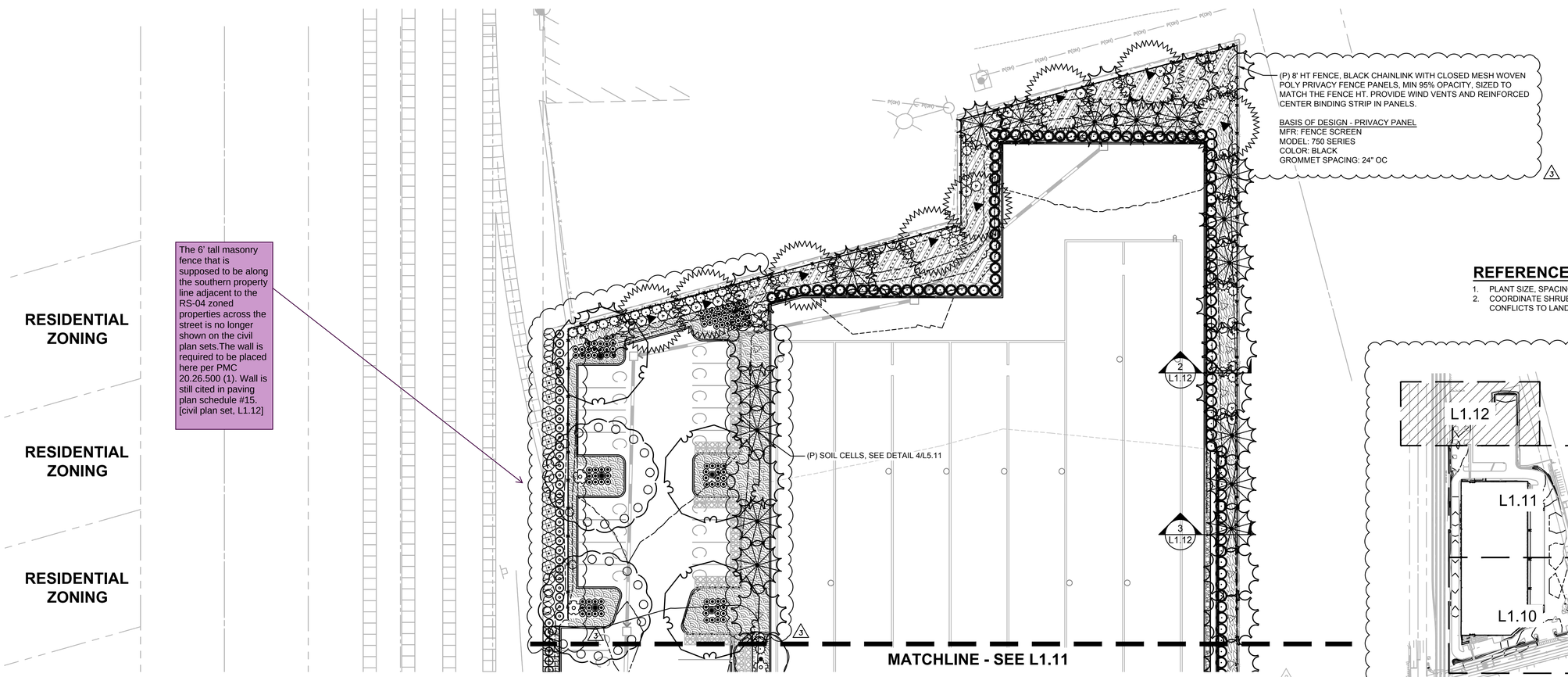

1 L1.12 PLANTING PLAN WEST

20 0 10 20 40 80
(IN FEET)
1 inch = 20 ft.

REFERENCE NOTES

1. PLANT SIZE, SPACING, AND QUANTITY, SEE PLANT SCHEDULE L0.01
2. COORDINATE SHRUB LAYOUT WITH EXISTING UTILITIES, REPORT CONFLICTS TO LANDSCAPE ARCHITECT.

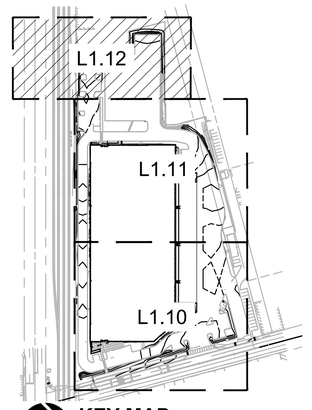

KEY MAP
SCALE: NTS

APPROVED
FINAL LANDSCAPE PLAN
BY: _____
PLANNING DIVISION
DATE: _____
NOTE: THIS APPROVAL IS VOID AFTER 1 YEAR FROM APPROVAL DATE.
THE CITY IS NOT RESPONSIBLE FOR ERRORS AND/OR OMISSIONS ON THESE PLANS. FIELD CONDITIONS MAY DICTATE CHANGES TO THESE PLANS AS DETERMINED BY THE PLANNING DIRECTOR, DESIGNEE OR PROJECT PLANNER.

CIVIL PERMIT 12/07/2023

Architecture ▪ Interiors
Planning ▪ Engineering

Portland, OR
503.224.9560
Vancouver, WA
360.695.7879
Seattle, WA
206.749.9993
www.mcknze.com

MACKENZIE
DESIGN DRIVEN | CLIENT FOCUSED

Client
CREF3 PUYALLUP OWNER LLC

11611 SAN VICENTE BLVD
10TH FLOOR
LOS ANGELES
CA 90049

Project
FORTRESS - PUYALLUP

240 15TH ST SE
PUYALLUP, WA,
98372

STATE OF WASHINGTON
NICOLE R. FERREIRA
NO. 1696 EXP. 12.14.25
LICENSED LANDSCAPE ARCHITECT

© MACKENZIE 2024
ALL RIGHTS RESERVED
THESE DRAWINGS ARE THE PROPERTY OF MACKENZIE AND ARE NOT TO BE USED OR REPRODUCED IN ANY MANNER, WITHOUT PRIOR WRITTEN PERMISSION

REVISION SCHEDULE

Delta	Issued As	Issue Date
2	PLAN CHECK	02/28/2024
3	PLAN CHECK	7/22/2024

SHEET TITLE:
PLANTING PLAN WEST

DRAWN BY: LJM, JWT
CHECKED BY: NRF
SHEET:
L1.12
JOB NO. 2220290.00

222029000 C:\TEMP\ACPUBLISH_716\290-L0.01.DWG:L1.12 NRF 07/22/24 15:33 1:1.00

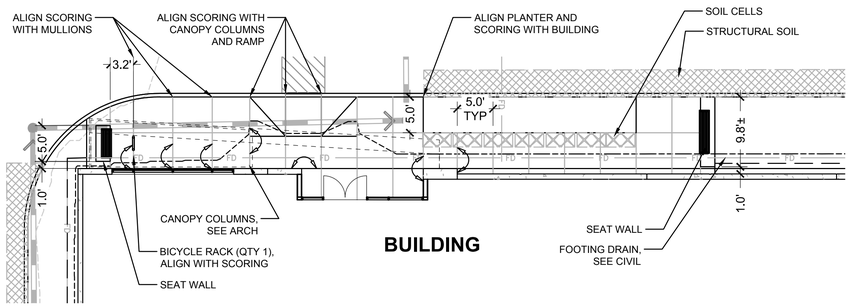

1 / L1.20 LAYOUT PLAN

20 0 10 20 40 80
(IN FEET)
1 inch = 20 ft.

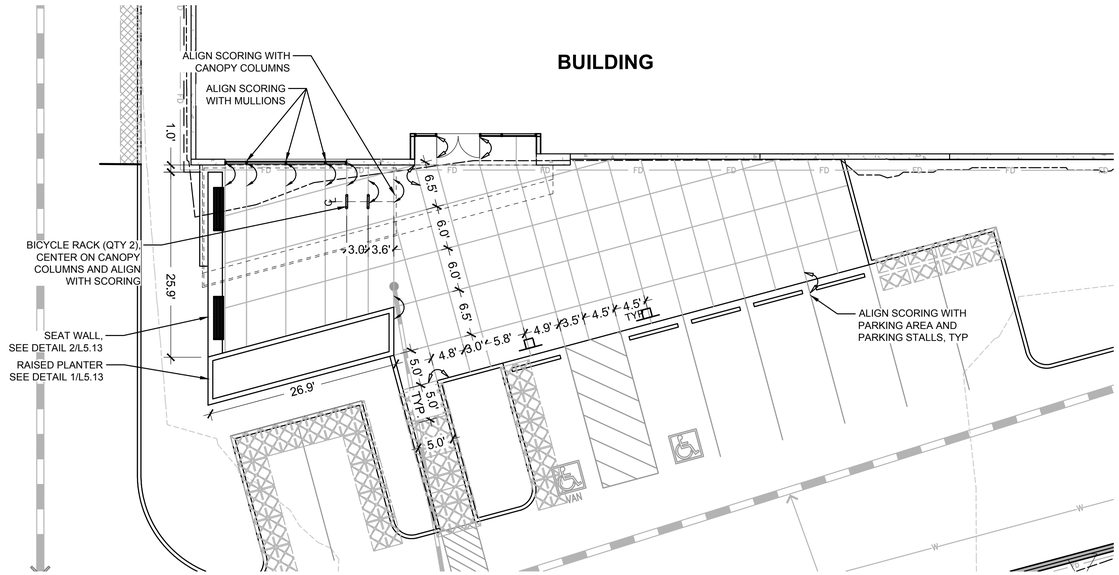

1 / L1.20 MATERIALS AND LAYOUT PLAN

20 0 10 20 40 80
(IN FEET)
1 inch = 20 ft.

REFERENCE NOTES

1. PLANT SIZE, SPACING, AND QUANTITY, SEE PLANT SCHEDULE L0.01
2. EXISTING TREE TO REMAIN. DO NOT DISTURB. PROTECT IN PLACE.
3. PROPOSED UTILITY BOX. AVOID PLANTING WITHIN DEFINED ACCESS ZONE.
4. CAREFULLY EXCAVATE SHRUB PITS IN VICINITY OF EXISTING TREES, WITHOUT DISTURBING TREE ROOTS.
5. COORDINATE SHRUB LAYOUT WITH EXISTING UTILITIES, REPORT CONFLICTS TO LANDSCAPE ARCHITECT.

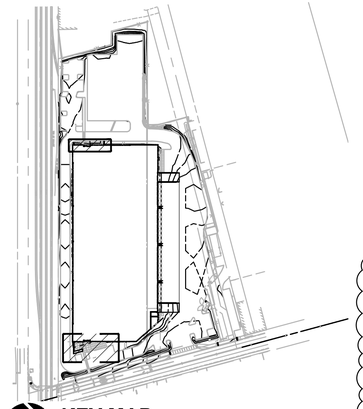

KEY MAP
SCALE: NTS

APPROVED
FINAL LANDSCAPE PLAN
BY: _____
PLANNING DIVISION
DATE: _____
NOTE: THIS APPROVAL IS VOID AFTER 1 YEAR FROM APPROVAL DATE.
THE CITY IS NOT RESPONSIBLE FOR ERRORS AND/OR OMISSIONS ON THESE PLANS. FIELD CONDITIONS MAY DICTATE CHANGES TO THESE PLANS AS DETERMINED BY THE PLANNING DIRECTOR, DESIGNEE OR PROJECT PLANNER.

CIVIL PERMIT 12/07/2023

Architecture ▪ Interiors
Planning ▪ Engineering

Portland, OR
503.224.9560
Vancouver, WA
360.695.7879
Seattle, WA
206.749.9993
www.mcknze.com

MACKENZIE.
DESIGN DRIVEN | CLIENT FOCUSED

Client
CREF3 PUYALLUP OWNER LLC

11611 SAN VICENTE BLVD
10TH FLOOR
LOS ANGELES
CA 90049

Project
FORTRESS - PUYALLUP

240 15TH ST SE
PUYALLUP, WA,
98372

STATE OF WASHINGTON
NICOLE R. FERREIRA
NO. 1606 EXP. 12/14/25
LICENSED LANDSCAPE ARCHITECT

© MACKENZIE 2024
ALL RIGHTS RESERVED
THESE DRAWINGS ARE THE PROPERTY OF MACKENZIE AND ARE NOT TO BE USED OR REPRODUCED IN ANY MANNER, WITHOUT PRIOR WRITTEN PERMISSION

REVISION SCHEDULE

Delta	Issued As	Issue Date
1	PLAN CHECK	12/07/2023
3	PLAN CHECK	04/20/2024

SHEET TITLE:
LAYOUT AND MATERIALS PLAN

DRAWN BY: AEZ, JWT
CHECKED BY: NRF
SHEET:
L1.20
JOB NO. 2220290.00

22202900\DRAWINGS\LANDSCAPE\290-L0.01.DWG:L1.20 NRF 07/22/24 15:20 1:1.00

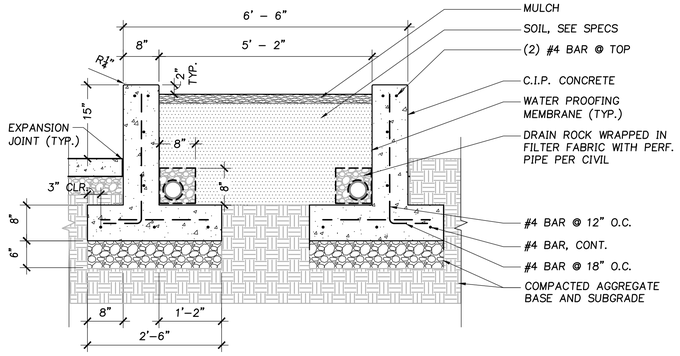

1 C.I.P PLANTER
SECTION
3/4"=1'-0"

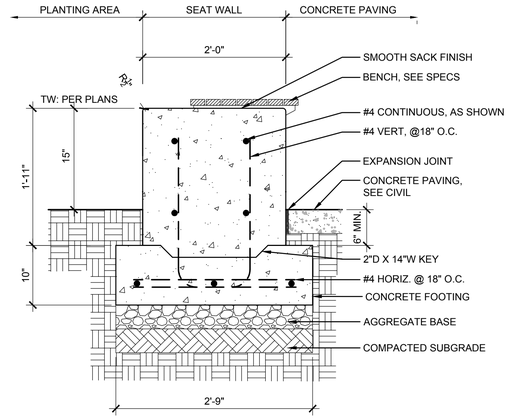

2 CONCRETE SEAT WALL
SECTION
SCALE: NTS

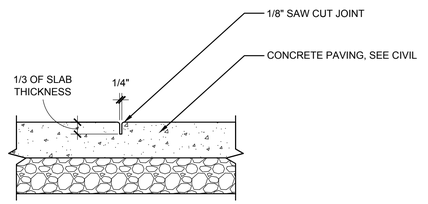

NOTES:
1. SEE SCORING PLAN L1.20 FOR LOCATION OF CONTRACTION JOINTS

3 CONTRACTION JOINT (CJ)
SCALE: NTS

NOTES:
1. SEE SCORING PLAN L1.20 FOR LOCATION OF EXPANSION JOINTS.

4 EXPANSION JOINT (EJ)
SCALE: NTS

NOT USED

△2 △3

Architecture ▪ Interiors
Planning ▪ Engineering

Portland, OR
503.224.9560
Vancouver, WA
360.695.7879
Seattle, WA
206.749.9993
www.mcknze.com

MACKENZIE.
DESIGN DRIVEN | CLIENT FOCUSED

Client
CREF3 PUYALLUP OWNER LLC

11611 SAN VICENTE BLVD
10TH FLOOR
LOS ANGELES
CA 90049

Project
FORTRESS - PUYALLUP

240 15TH ST SE PUYALLUP, WA, 98372

STATE OF WASHINGTON
NICOLE R. FERREIRA
LICENSED LANDSCAPE ARCHITECT
No. 1928 EXP. 12/14/25

© MACKENZIE 2024
ALL RIGHTS RESERVED
THESE DRAWINGS ARE THE PROPERTY OF MACKENZIE AND ARE NOT TO BE USED OR REPRODUCED IN ANY MANNER, WITHOUT PRIOR WRITTEN PERMISSION

REVISION SCHEDULE

Delta	Issued As	Issue Date
1	PLAN CHECK	12/07/2023
2	PLAN CHECK	02/28/2024
3	PLAN CHECK	TBD

SHEET TITLE:
SITE DETAILS

APPROVED
FINAL LANDSCAPE PLAN
BY: _____
PLANNING DIVISION
DATE: _____
NOTE: THIS APPROVAL IS VOID AFTER 1 YEAR FROM APPROVAL DATE.
THE CITY IS NOT RESPONSIBLE FOR ERRORS AND/OR OMISSIONS ON THESE PLANS. FIELD CONDITIONS MAY DICTATE CHANGES TO THESE PLANS AS DETERMINED BY THE PLANNING DIRECTOR, DESIGNEE OR PROJECT PLANNER.

△3

DRAWN BY: LJM
CHECKED BY: NRF
SHEET:
L5.10
△1
JOB NO. 2220290.00

CIVIL PERMIT 12/07/2023

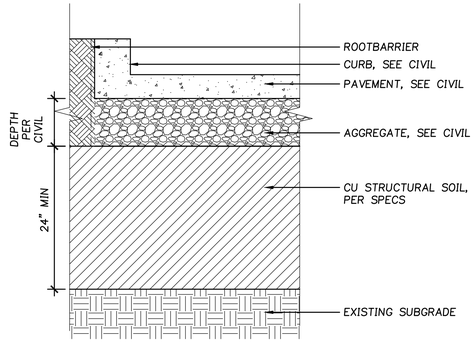

1 CU-STRUCTURAL SOIL

SCALE: NTS

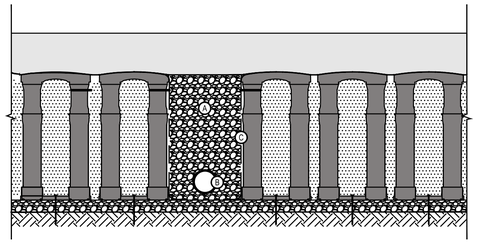

A WASHED STONE WITHOUT FINES

B EXAMPLE OF EXISTING OR PROPOSED UTILITY

C GEOGRID TO LINE PERIMETER OF AGGREGATE WITH 6" TOE (INWARD) AND12" EXCESS FOLDED OVER TOP OF ADJACENT DECKS

2 BRIDGING WITH AGGREGATE

SOIL CELL

SCALE: NTS

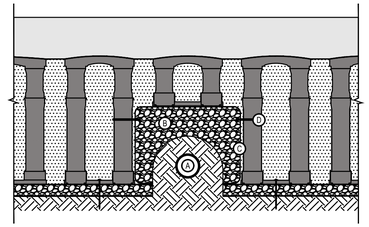

A EXAMPLE OF EXISTING OR PROPOSED UTILITY

B WASHED STONE WITHOUT FINES

C GEOGRID TO LINE PERIMETER OF AGGREGATE WITH 6" TOE (INWARD) AND 6" EXCESS (BETWEEN AGGREGATE AND BRIDGING CELL)

D CABLE TIE, ATTACHING GEOGRID TO SILVA CELL AT BASE OF UPPER POST FLARE

3 BRIDGING OVER UTILITIES

SOIL CELL

SCALE: NTS

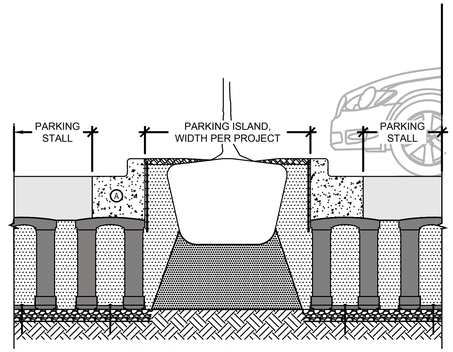

A CONCRETE CURB AND GUTTER. MUST BEAR ENTIRELY OVER TOP OF SILVA CELLS.

4 PARKING BAY

SOIL CELL

SCALE: NTS

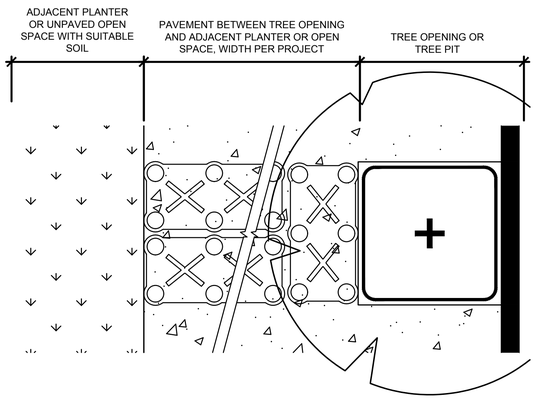

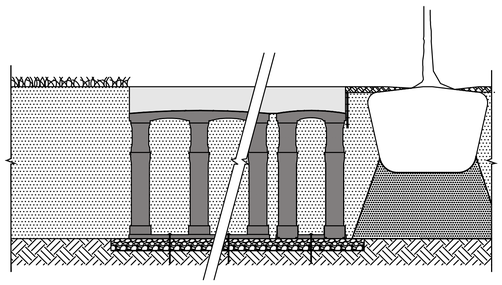

5 BREAKOUT ZONE

SOIL CELL

SCALE: NTS

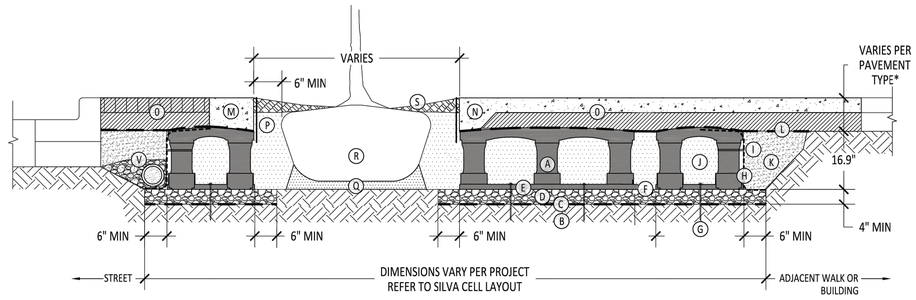

6 SILVA CELL SYSTEM 1X

NOT TO SCALE

KEY PLAN

A SILVA CELL SYSTEM (DECK, BASE, AND POSTS)

B SUBGRADE, COMPACTED

C GEOTEXTILE FABRIC, PLACED ABOVE SUBGRADE

D 4" MIN AGGREGATE SUB BASE, COMPACTED TO 95% PROCTOR

E SILVA CELL BASE SLOPE, 10% MAX

F 1" TO 6" SPACING BETWEEN SILVA CELLS AT BASE

G ANCHORING SPIKES, CONTACT DEEPROOT FOR ALTERNATIVE

H GEOGRID, WRAPPED AROUND PERIMETER OF SYSTEM, WITH 6" TOE (OUTWARD FROM BASE) AND 12" EXCESS (OVER TOP OF DECK)

I CABLE TIE, ATTACHING GEOGRID TO SILVA CELL AT BASE OF UPPER LEG FLARE, AS NEEDED

J PLANTING SOIL, PER PROJECT SPECIFICATIONS, PLACED IN LIFTS AND WALK-IN COMPACTED TO 75-85% PROCTOR

K COMPACTED BACKFILL, PER PROJECT SPECIFICATIONS

L GEOTEXTILE FABRIC TO EDGE OF EXCAVATION

M RIBBON CURB AT TREE OPENING (TO BE USED WITH PAVERS OR ASPHALT)

N THICKENED EDGE AT TREE OPENING (TO BE USED WITH CONCRETE)

O PAVEMENT AND AGGREGATE BASE PER PROJECT *

*MINIMUM PAVEMENT PROFILE OPTIONS TO MEET H-20 LOADING

PAVEMENT	+ AGGREGATE BASE COURSE
4" CONCRETE	+ 4" AGGREGATE
3" PAVER	+ 12" AGGREGATE
4" ASPHALT	+ 12" AGGREGATE
2.6" PAVER	+ 5" CONCRETE

P DEEPROOT ROOT BARRIER, 12" OR 18", DEPTH DETERMINED BY THICKNESS OF PAVEMENT SECTION, INSTALL DIRECTLY ADJACENT TO CONCRETE EDGE RESTRAINT

Q PLANTING SOIL BELOW ROOT BALL, COMPACTED WELL TO PREVENT SETTLING

R ROOT BALL

S TREE OPENING TREATMENT, PER PROJECT SPECIFICATIONS

T NOT USED

U NOT USED

V UNDERDRAIN SYSTEM, WHEN REQUIRED (LOCATION AND DETAILS BY OTHERS)

NOTES

1. EXCAVATION SHALL BE DONE IN ACCORDANCE WITH ALL APPLICABLE HEALTH AND SAFETY REGULATIONS
2. INSTALLATION TO BE COMPLETED IN ACCORDANCE WITH MANUFACTURER'S SPECIFICATIONS
3. PROVIDE SUPPLEMENTAL IRRIGATION
4. DO NOT SCALE DRAWINGS

SILVA CELL SYSTEM 1X

NOT TO SCALE

FEET

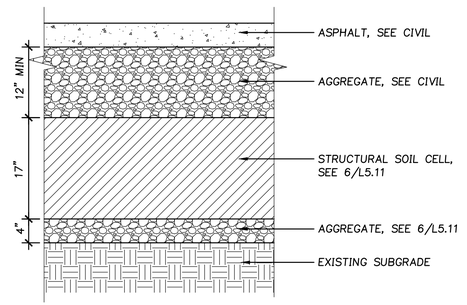

7 SOIL CELLS AT PAVEMENT

SCALE: NTS

COPYRIGHT © 2019| DEEPROOT GREEN INFRASTRUCTURE (ALL RIGHTS RESERVED)

deeproot
DeepRoot Green Infrastructure
www.deeproot.com

T 415 781 9700
F 415 781 0191

Architecture ▪ Interiors
Planning ▪ Engineering

Portland, OR
503.224.9560
Vancouver, WA
360.695.7879
Seattle, WA
206.749.9993
www.mcknze.com

MACKENZIE.
DESIGN DRIVEN | CLIENT FOCUSED

Client

CREF3 PUYALLUP OWNER LLC

11611 SAN VICENTE BLVD 10TH FLOOR LOS ANGELES CA 90049

Project

FORTRESS - PUYALLUP

240 15TH ST SE PUYALLUP, WA, 98372

© MACKENZIE 2024
ALL RIGHTS RESERVED
THESE DRAWINGS ARE THE PROPERTY OF MACKENZIE AND ARE NOT TO BE USED OR REPRODUCED IN ANY MANNER, WITHOUT PRIOR WRITTEN PERMISSION

REVISION SCHEDULE

Delta	Issued As	Issue Date
1	PLAN CHECK	12/07/2023
3	PLAN CHECK	TBD

SHEET TITLE:

SOIL DETAILS

APPROVED
FINAL LANDSCAPE PLAN
BY: _____
PLANNING DIRECTOR
DATE: _____

NOTE: THIS APPROVAL IS VOID AFTER 1 YEAR FROM APPROVAL DATE.
THE CITY IS NOT RESPONSIBLE FOR ERRORS AND/OR OMISSIONS ON THESE PLANS. FIELD CONDITIONS MAY DICTATE CHANGES TO THESE PLANS AS DETERMINED BY THE PLANNING DIRECTOR, DESIGNEE OR PROJECT PLANNER.

3

DRAWN BY: LJM

CHECKED BY:NRF

SHEET:

L5.11

1

JOB NO. **2220290.00**

CIVIL PERMIT 12/07/2023

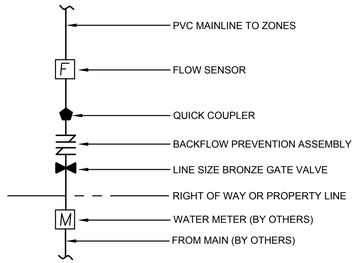

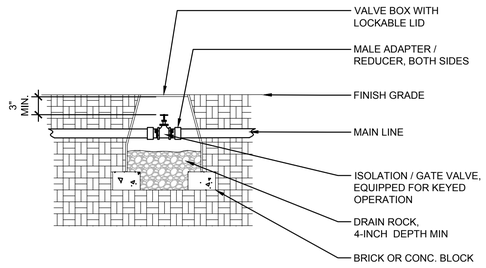

NOTES:
1. PVC ADAPTER AND FITTINGS TO BE SAME SIZE AS ISOLATION VALVE

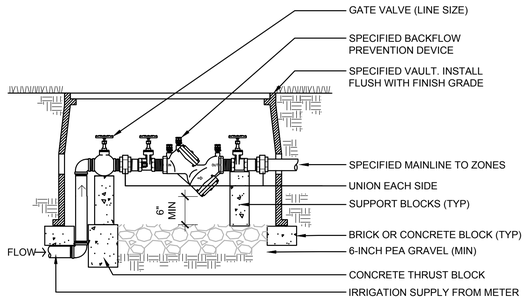

NOTE:
INSTALL BACKFLOW PREVENTOR PER CODE AND REQUIREMENTS OF PREVAILING JURISDICTIONS.

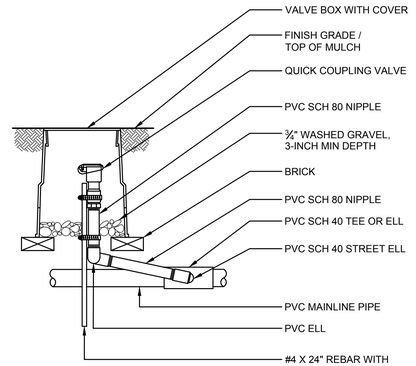

1 POINT OF CONNECTION

SCALE: NTS

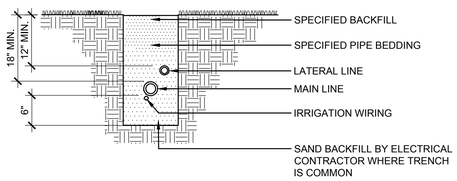

NOTES:
1. SNAKE ALL HDPE PIPING IN TRENCHING
2. TIE LOOSE 3 FT LOOP IN ALL IRRIGATION WIRING AT CHANGES IN DIRECTION GREATER THAN 30 DEGREES. UNTIE AFTER ALL CONNECTIONS HAVE BEEN MADE.
3. WHERE ELECTRICAL WIRING DOES NOT SHARE COMMON TRENCH, OVER EXCAVATE TRENCH 2 INCHES MIN AND BACKFILL WITH SPECIFIED BEDDING MATERIAL.
4. LOCATE ALL WIRING NOT IN COMMON TRENCHES ACCURATELY ON RECORD DRAWINGS.

LI-DETL-GEN-TRENCH.DWG

2 ISOLATION / GATE VALVE

SCALE: NTS

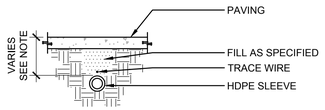

SECTION AT PAVING

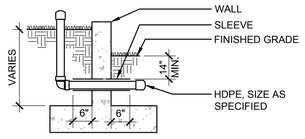

SECTION AT WALLS

MIN DEPTH OF PIPE	
MAINLINE	18"
LATERAL AT PAVING	14"
AT DRIVING SURFACE	24"

NOTES:
1. SLEEVES TO BE TWICE DIAMETER OF LINE OR LINES PASSING THROUGH.
2. EXTEND IRRIGATION SLEEVE 6-INCHES BEYOND EDGE OF PAVING, EACH SIDE.
3. INSTALL SLEEVES AT SAME TIME AS WALL OR PAVING INSTALLATION.
4. INSTALL PIPE IN SLEEVE BEFORE BACKFILLING AND CAP BOTH ENDS WITHOUT GLUE.

LI-DETL-GEN-SLEEVE.DWG

3 DOUBLE CHECK VALVE

SCALE: NTS

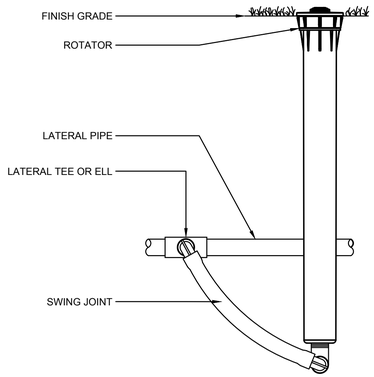

LI-DETL-HEAD-SPRAY-MT.DWG

4 QUICK COUPLER VALVE

SCALE: NTS

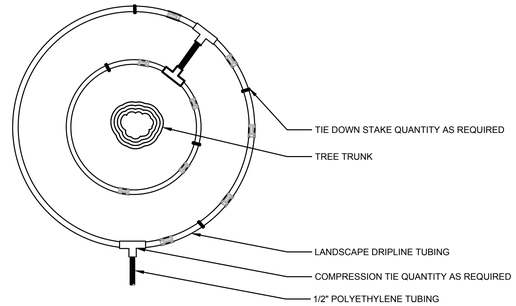

5 IRRIGATION TRENCHING (TYP)

SCALE: NTS

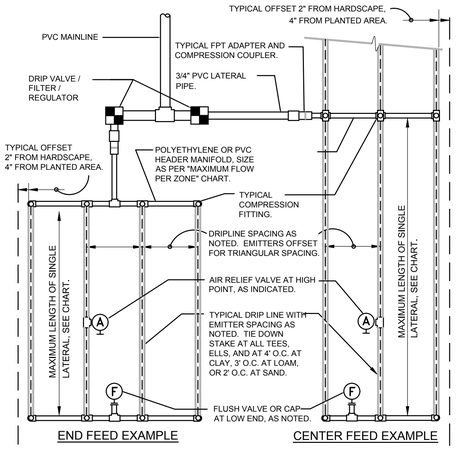

END FEED EXAMPLE CENTER FEED EXAMPLE

6 IRRIGATION SLEEVES

BASE BID

SCALE: NTS

MAXIMUM LATERAL LENGTH (FEET)						
	EMITTER FLOW RATE GPH					
	12" SPACING		18" SPACING		24" SPACING	
PSI	0.6	0.9	0.6	0.9	0.6	0.9
10	125	96	175	135	218	171
20	249	191	350	171	442	340
30	307	236	434	333	550	422
40	350	268	495	380	627	171
50	125	96	175	135	218	171
60	125	96	175	135	218	171

GRID PRECIPITATION RATES (IN/HR)			
		EMITTER FLOW RATE	
EMITTER SPACING	LATERAL SPACING	0.6	0.9
12	12	0.96	1.44
18	18	0.69	1.03
24	24	0.28	0.41

LATERAL FLOW PER 100 FT (GPM)			
EMITTER FLOW	12" SPACING	18" SPACING	24" SPACING
0.6 GPH	1.0 GPM	0.67 GPM	0.50 GPM
0.9 GPH	1.5 GPM	1.0 GPM	0.75 GPM

MAXIMUM FLOW PER ZONE		
	MAX GPM	PSI LOSS
SCHEDULE 40 PVC HEADER SIZE		
1/2"	4.7 GPM	7.7 PSI
3/4"	8.3 GPM	5.6 PSI
1"	13.5 GPM	4.2 PSI
1-1/2"	33.9 GPM	2.9 PSI
2"	52.4 GPM	1.9 PSI
POLY PIPE HEADER SIZE		
1/2"	4.7 GPM	8.8 PSI
3/4"	8.3 GPM	6.3 PSI
1"	13.5 GPM	4.8 PSI
1-1/2"	31.8 GPM	2.9 PSI
2"	52.4 GPM	2.2 PSI

SLOPED CONDITION NOTE:
1. DRIPLINE LATERALS SHOULD FOLLOW THE CONTOURS OF THE SLOPE WHENEVER POSSIBLE.
2. INSTALL AIR RELIEF VALVE AT HIGHEST POINT.
3. NORMAL SPACING WITHIN THE TOP ⅔ OF SLOPE,
4. INSTALL DRIPLINE AT 25% GREATER SPACING AT THE BOTTOM ⅓ OF THE SLOPE.
5. WHEN ELEVATION CHANGE IS 10 FT OR MORE, ZONE THE BOTTOM ⅓ ON A SEPARATE VALVE.

LI-DETL-HEAD-SPRAY-MT.DWG

7 MULTI-TRAJECTORY SPRAY HEAD

SCALE: NTS

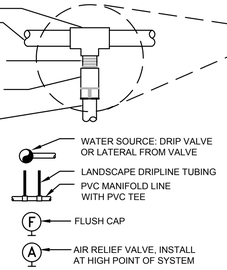

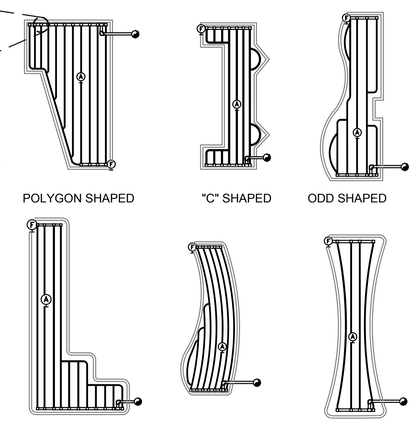

8 DRIPLINE AROUND TREE

BID ALT 1

SCALE: NTS

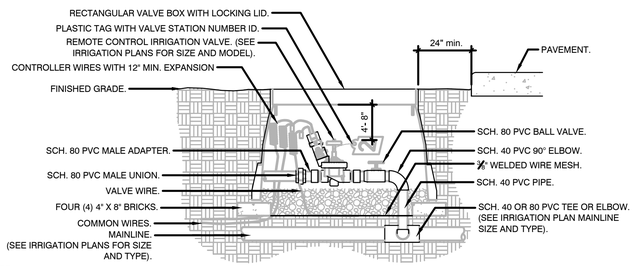

NOTE:
1- LOCATE VALVE BOX WITHIN 24" OF PAVEMENT EDGE IN PLANTING AREA WHERE EASILY ACCESSIBLE WHENEVER POSSIBLE.

2- COMMON WIRE AND CONTROLLER WIRE SHALL BE DIRECT BURIAL 14 AWG OR LARGER. COLOR: COMMON (WHITE), CONTROLLER WIRE FOR TURF (BLUE), AND CONTROLLER WIRE FOR SHRUBS (RED). (SEE SPECIFICATIONS FOR 2-WIRE CONTROLLERS).

3- ALL WIRE RUNS SHALL BE CONTINUOUS WITHOUT ANY SPLICES UNLESS APPROVED BY THE OWNER'S REPRESENTATIVE. SEE SPLICE BOX DETAIL. WIRE CONNECTIONS SHALL BE MADE USING DBR/Y-6 CONNECTORS OR APPROVED EQUAL.

4-VALVE BOX SHALL BE WRAPPED WITH MIN. 3 MIL THICK PLASTIC AND SECURE IT USING DUCT TAPE OR ELECTRICAL TAPE.

5- MAINLINES 4" OR LARGER SHALL USE SADDLES AT THE CONNECTIONS POINTS TO THE IRRIGATION VALVE. (SEE SPECIFICATIONS FOR IRRIGATIONS SADDLES).

6- ALL SCH. 80 PVC TO SCH. 40 PVC THREADED CONNECTIONS SHALL BE MADE USING TEFLON TAPE.

7- VALVE BOXES SHALL BE LOCATED IN PLANTING AREAS.

9 TYPICAL RAIN BIRD DRIPLINE REQUIREMENTS

N.T.S.

10 REMOTE CONTROL IRRIGATION VALVE

1 1/2" = 1'-0"

P-PT.M-25

Architecture ▪ Interiors
Planning ▪ Engineering

Portland, OR
503.224.9560
Vancouver, WA
360.695.7879
Seattle, WA
206.749.9993
www.mcknze.com

MACKENZIE.
DESIGN DRIVEN | CLIENT FOCUSED

Client
CREF3 PUYALLUP OWNER LLC

11611 SAN VICENTE BLVD 10TH FLOOR LOS ANGELES CA 90049

Project
FORTRESS - PUYALLUP

240 15TH ST SE PUYALLUP, WA, 98372

© MACKENZIE 2024
ALL RIGHTS RESERVED
THESE DRAWINGS ARE THE PROPERTY OF MACKENZIE AND ARE NOT TO BE USED OR REPRODUCED IN ANY MANNER, WITHOUT PRIOR WRITTEN PERMISSION.

REVISION SCHEDULE

Delta	Issued As	Issue Date
1	PLAN CHECK	12/07/2023
3	PLAN CHECK	TBD

SHEET TITLE:
IRRIGATION DETAILS

APPROVED
FINAL LANDSCAPE PLAN
BY: _____
PLANNING DIVISION.
DATE: _____
NOTE: THIS APPROVAL IS VOID AFTER 1 YEAR FROM APPROVAL DATE.
THE CITY IS NOT RESPONSIBLE FOR ERRORS AND/OR OMISSIONS ON THESE PLANS. FIELD CONDITIONS MAY DICTATE CHANGES TO THESE PLANS AS DETERMINED BY THE PLANNING DIRECTOR, DESIGNEE OR PROJECT PLANNER.

3

DRAWN BY: LJM

CHECKED BY:NRF

SHEET:
L5.12

1

JOB NO. **2220290.00**

CIVIL PERMIT 12/07/2023

NOT USED

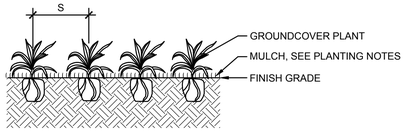

PLANTING SECTION

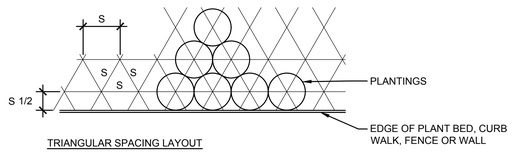

TRIANGULAR SPACING LAYOUT

NOTES

1. TILL SOIL SO THAT THERE ARE NO CLODS OR CLUMPS LARGER THAN 1 1/2" DIAMETER

4 GROUNDCOVER PLANTING

SCALE: NTS

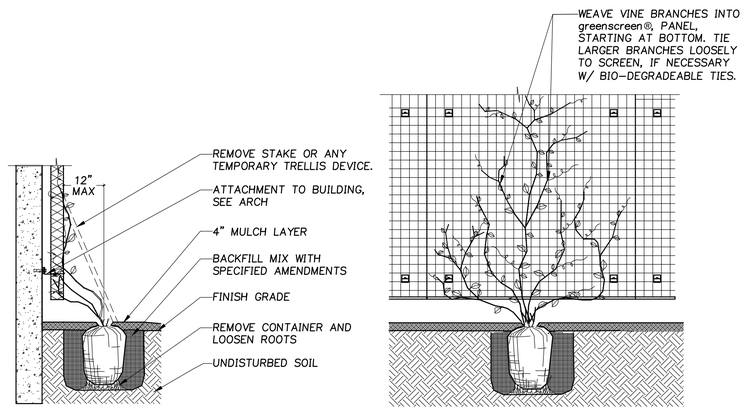

SECTION ELEVATION

NOTE:
1. PLANT VINES PER LANDSCAPE PLANS (L1.10-L1.11)

8 VINE PLANTING

SCALE: NTS

NOT USED

NOT USED

NOT USED

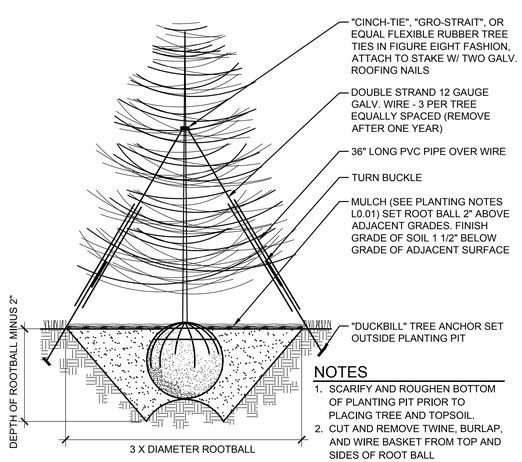

NOTES

1. SCARIFY AND ROUGHEN BOTTOM OF PLANTING PIT PRIOR TO PLACING TREE AND TOPSOIL.
2. CUT AND REMOVE TWINE, BURLAP, AND WIRE BASKET FROM TOP AND SIDES OF ROOT BALL

2 EVERGREEN TREE PLANTING DETAIL

SCALE: NTS

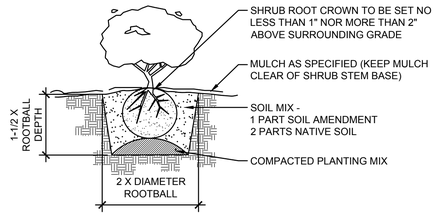

3 SHRUB PLANTING

SCALE: NTS

Architecture ▪ Interiors
Planning ▪ Engineering

Portland, OR
503.224.9560
Vancouver, WA
360.695.7879
Seattle, WA
206.749.9993
www.mcknze.com

MACKENZIE.
DESIGN DRIVEN | CLIENT FOCUSED

Client

CREF3 PUYALLUP OWNER LLC

11611 SAN VICENTE BLVD
10TH FLOOR
LOS ANGELES
CA 90049

Project

FORTRESS - PUYALLUP

240 15TH ST SE
PUYALLUP, WA, 98372

© MACKENZIE 2024
ALL RIGHTS RESERVED
THESE DRAWINGS ARE THE PROPERTY OF MACKENZIE AND ARE NOT TO BE USED OR REPRODUCED IN ANY MANNER, WITHOUT PRIOR WRITTEN PERMISSION

2

REVISION SCHEDULE		
Delta	Issued As	Issue Date
1	PLAN CHECK	12/07/2023
2	PLAN CHECK	02/22/2024
3	PLAN CHECK	TBD

SHEET TITLE:

PLANTING DETAILS

APPROVED
FINAL LANDSCAPE PLAN

BY: _____
PLANNING DIVISION

DATE: _____

NOTE: THIS APPROVAL IS VOID AFTER 1 YEAR FROM APPROVAL DATE.
THE CITY IS NOT RESPONSIBLE FOR ERRORS AND/OR OMISSIONS ON THESE PLANS. FIELD CONDITIONS MAY DICTATE CHANGES TO THESE PLANS AS DETERMINED BY THE PLANNING DIRECTOR, DESIGNEE OR PROJECT PLANNER.

3

DRAWN BY: LJM

CHECKED BY:NRF

SHEET:

L5.13

1

JOB NO. **2220290.00**

CIVIL PERMIT 12/07/2023

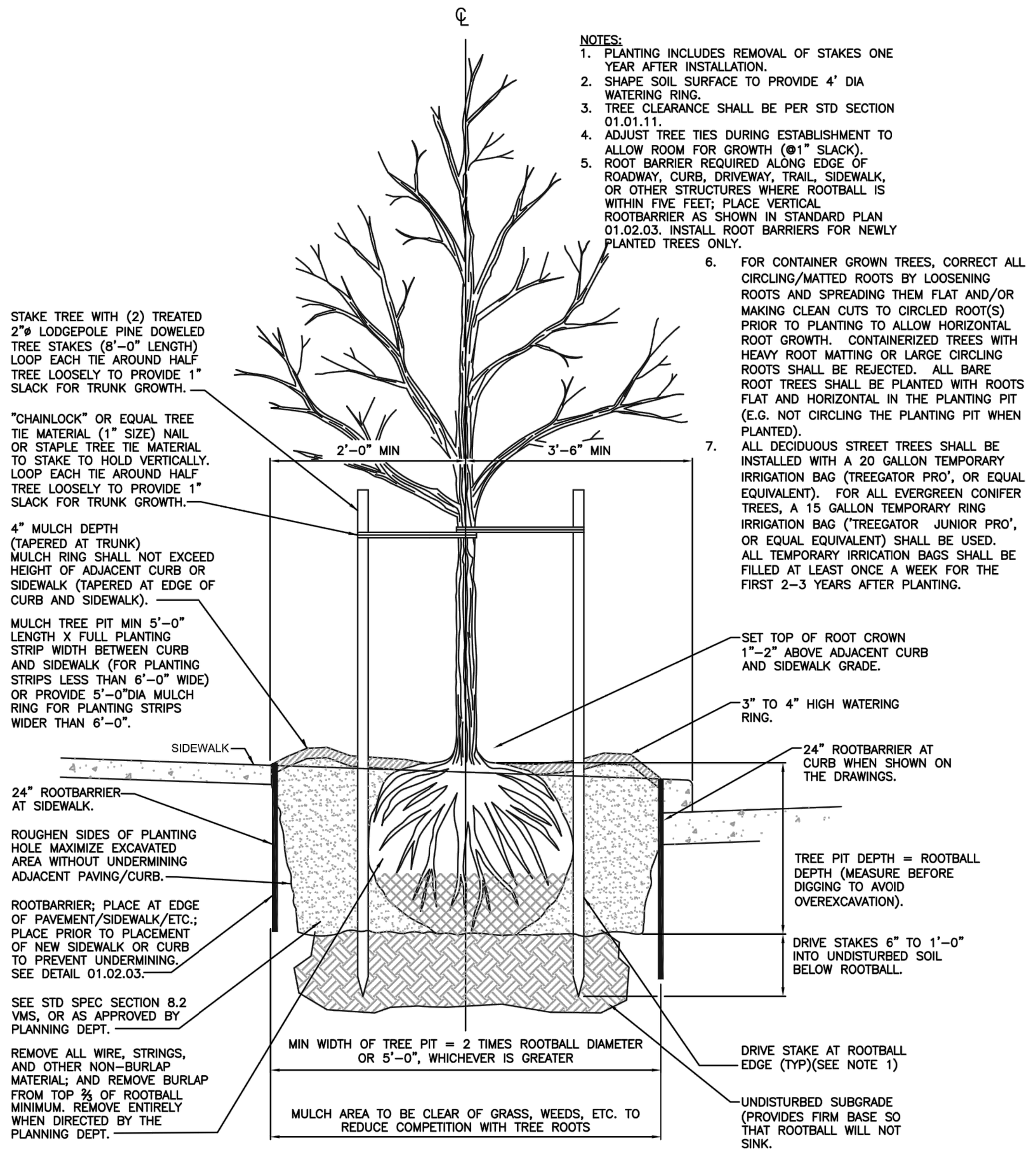

CITY OF PUYALLUP
DEVELOPMENT ENGINEERING and PUBLIC WORKS DEPARTMENTS

1 STREET TREE PLANTING IN PLANTING STRIP

DRAWN BY	CHECKED BY	APPROVED BY	REVISED BY	CITY STANDARD
LINDA LIAN	CHRIS BEALE	COLLEEN HARRIS	LINDA LIAN	01.02.07
FILE NAME F:\DWG\COMMON\STDS\CITYSTDS\STR\01.02.07		DATE APPROVED 08/01/2015	DATE REVISED 08/01/2015	SCALE 1:1

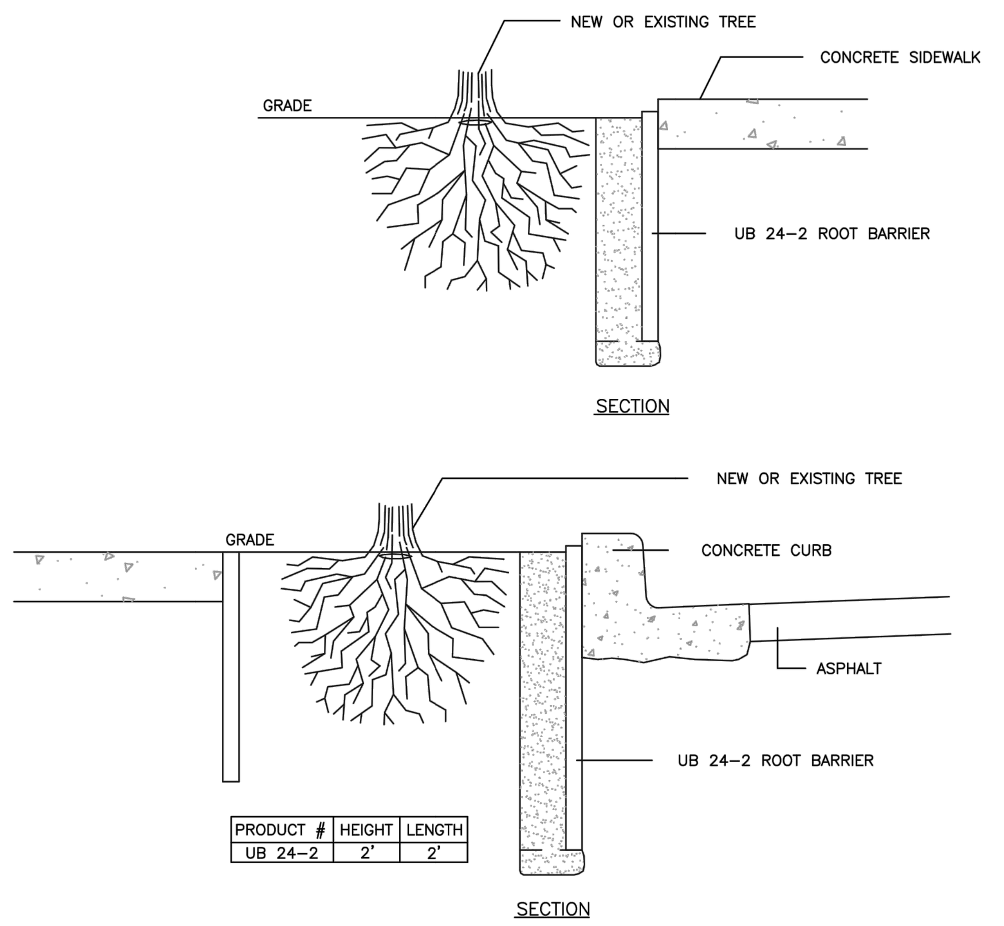

NOTES:
1. ROOT BARRIERS SHALL BE REQUIRED IN ALL STREET TREE PLANTING INSTALLATIONS WHETHER NEW OR EXISTING, WHEN STREET TREES ARE INSTALLED IN RIGHT-OF-WAY OR IN A PLANTING EASEMENT*.
2. ROOT BARRIERS USED SHALL BE DeepRoot ROOT BARRIERS OR EQUIVALENT.
3. UB – 24 SHALL BE USED
4. ROOT BARRIERS SHALL BE INSTALLED IF REQUIRED BY THE CITY.
5. INSTALLATION OF ROOT BARRIERS TO BE IN ACCORDANCE WITH THE MANUFACTURER'S SPECIFICATIONS.
6. THE PANEL SHALL BE INSTALLED SO THE VERTICAL RIBS FACE THE ROOTS OF THE TREE. A MINIMUM OF FOUR (4) PANELS SHALL BE INSTALLED ON EACH SIDE OF ROOT BALL FOR 8' OF PROTECTION.
7. FOR PRODUCT INFORMATION VISIT:
http://www.deeproot.com/template.php?sec=products&nav=treeRoot&content=rb_app&sub=2&lsel=1

*"PLANTING EASEMENT" SHALL MEAN THAT PORTION OF LAND MADE AVAILABLE AS A PUBLIC EASEMENT FOR THE PURPOSE OF PLANTING AND MAINTAINING CITY STREET TREES. ALL STREET TREES PLANTED WITHIN A PLANTING EASEMENT SHALL BE PLANTED WITHIN THREE FEET OF RIGHT-OF-WAY.

CITY OF PUYALLUP
DEVELOPMENT ENGINEERING and PUBLIC WORKS DEPARTMENTS

2 ROOT BARRIER DETAIL

DRAWN BY	CHECKED BY	APPROVED BY	REVISED BY	CITY STANDARD
JIM ERWIN-SVOBODA	CHRIS BEALE	COLLEEN HARRIS	LINDA LIAN	01.02.03
FILE NAME F:\DWG\COMMON\STDS\CITY\2009\01_STR\01.02\01.02.03		DATE APPROVED 07/01/2009	DATE REVISED 08/01/2015	SCALE 1:1

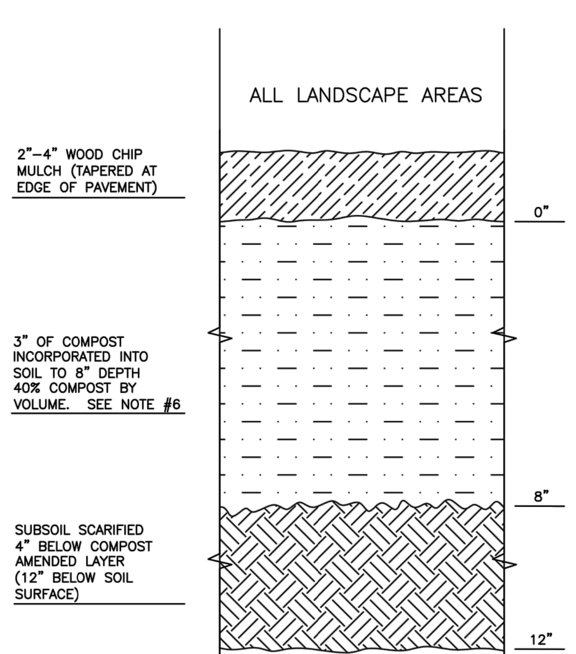

NOTES:
1. ALL SOIL AREAS DISTURBED OR COMPACTED DURING CONSTRUCTION, AND NOT COVERED BY BUILDINGS OR PAVEMENT, SHALL BE AMENDED WITH COMPOST AS DESCRIBED BELOW.
2. SUBSOIL SHOULD BE SCARIFIED (LOOSENED) 4 INCHES BELOW AMENDED LAYER, TO PRODUCE 12-INCH DEPTH OF UN-COMPACTED SOIL, EXCEPT WHERE SCARIFICATION WOULD DAMAGE TREE ROOTS OR AS DETERMINED BY THE ENGINEER. SEE NOTE BELOW REGARDING PLANTING STEPS FOR STREET TREES.
3. COMPOST SHALL BE TILLED IN TO 8 INCH DEPTH INTO EXISTING SOIL, OR PLACE 8 INCHES OF COMPOST-AMENDED SOIL, PER SOIL SPECIFICATION.
4. PLANTING BEDS SHALL RECEIVE 3 INCHES OF COMPOST TILLED IN TO 8-INCH DEPTH, OR MAY SUBSTITUTE 8" OF IMPORTED SOIL CONTAINING 35-40% COMPOST BY VOLUME. MULCH AFTER PLANTING, WITH 4 INCHES OF ARBORIST WOOD CHIP MULCH OR APPROVED EQUAL (6" OF LOOSE WOOD CHIPS AT THE TIME OF PLANTING TO ALLOW SETTLING TO 4").
5. SETBACKS: TO PREVENT UNEVEN SETTLING, DO NOT COMPOST-AMEND SOILS WITHIN 3 FEET OF UTILITY INFRASTRUCTURES (POLES, VAULTS, METERS ETC.). WITHIN ONE FOOT OF PAVEMENT EDGE, CURBS AND SIDEWALKS SOIL SHOULD BE COMPACTED TO APPROXIMATELY 95% PROCTOR TO ENSURE A FIRM SURFACE.
6. SEE SECTION 8.2(B) OF THE VMS FOR SOIL AMENDMENT AND INSTRUCTION PROCEDURES FOR STREET TREE PLANTER STRIPS. ALL STREET TREE PLANTER STRIPS SHALL RECEIVE 40% COMPOST AMENDED SOIL TO THE FULL DEPTH OF THE STREET TREE ROOTBALL.

CITY OF PUYALLUP
DEVELOPMENT ENGINEERING and PUBLIC WORKS DEPARTMENTS

3 SOIL AMENDMENT AND DEPTH

DRAWN BY	CHECKED BY	APPROVED BY	REVISED BY	CITY STANDARD
LINDA LIAN	CHRIS BEALE	COLLEEN HARRIS	XXXX	01.02.08a
FILE NAME F:\DWG\COMMON\STDS\CITYSTDS\STR\01.02.08		DATE APPROVED 08/01/2015	DATE REVISED XX/XX/XX	SCALE 1:1

TREE PROTECTION ZONE (TPZ)

NO ENTRY. NO GRADE CHANGES, STORAGE/STOCKPILING OF MATERIALS OR EQUIPMENT, PLACEMENT OF FILL OR TOP SOIL, TRENCHING OR VEHICULAR/FOOT TRAFFIC PERMITTED WITHIN THE TPZ. THIS TREE BARRIER SHALL NOT BE REMOVED WITHOUT AUTHORIZATION FROM PUYALLUP PLANNING DEPARMENT—SUBJECT TO FINES AND ENFORCEMENT ACTION BY THE CITY—TO REPORT VIOLATIONS OR FOR MORE INFORMATION—CALL (253) 864.4165

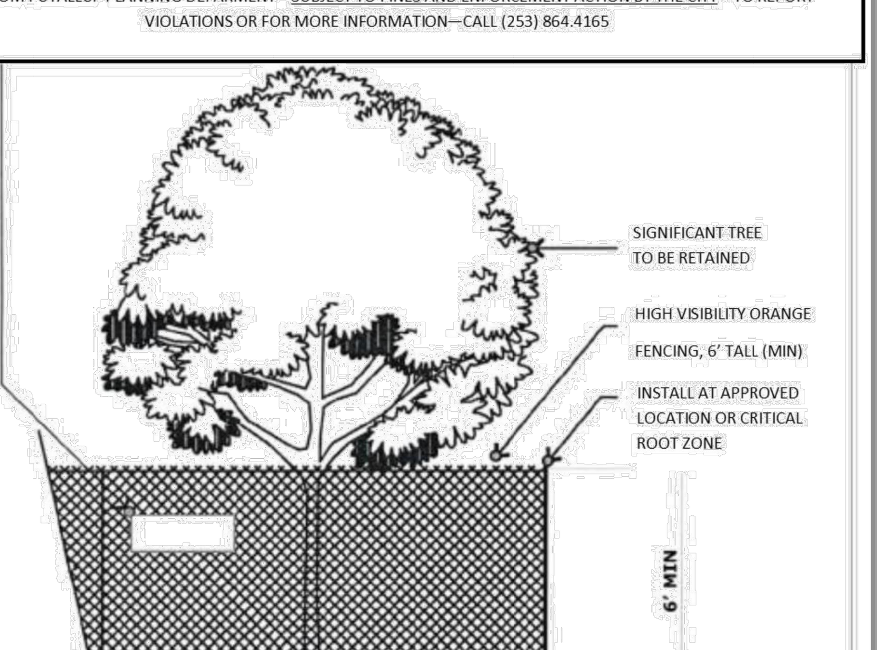

- MINIMUM SIX (6) FOOR HIGH TEMPORARY HIGH VISIBILITY ORANGE CONSTRUCTION FENCING SHALL BE PLACED AT THE CRITICAL ROOT ZONE OR DESIGNATED LIMIT OF DISTURBANCE ON APPROVED FINAL LANDSCAPE PLAN SET. FENCING SHALL BE INSTALLED USING POSTS DRIVEN INTO GROUND—PIER BLOCKS SHALL NOT BE USED. AVOID POSTS DRIVEN INTO ROOTS LARGER THAN 1" DIAMETER. FENCING SHALL BE INSTALLED PRIOR TO WORK COMMENCING ON SITE AND REMAIN IN PLACE THROUGHOUT ALL PHASES ON CONSTRUCTION—CALL THE CITY'S PLANNING DIVISION WITH REQUESTS TO MODIFY THE LOCATION OF THE TREE PROTECTION FENCING—(253) 864-4165
- TREATMENT OF ROOTS EXPOSED DURING CONSTRUCTION: FOR ROOTS OVER ONE (1) INCH DIAMETER DAMAGED DURING CONSTRUCTION, MAKE A CLEAN STRAIGHT CUT TO REMOVE DAMAGED PORTION OF ROOT. ALL EXPOSED ROOTS SHALL BE TEMPORARILY COVERED WITH DAMP BURLAP TO PREVENT DRYING AND COVERED WITH SOIL AS SOON AS POSSIBLE. OTHER PRE-TREATMENT MEASURES MAY BE REQUIRED TO PROTECT ROOT SYSTEM—SEE APPROVED TREE PROTECTION OR FINAL LANDSCAPE PLAN FOR FURTHER DETAILS.
- NO STOCKPILING OF MATERIALS, VEHICULAR TRAFFIC, PLACEMENT OF TOP SOIL OR FILL MATERIAL, STORAGE OF EQUIPMENT OR MACHINERY SHALL BE ALLOWED WITHIN THE LIMITS OF THE ESTABLISHED FENCING. FENCING SHALL NOT BE MOVED OR REMOVED UNLESS APPROVED BY THE CITY PLANNING DIVISION. WORK WHTIN PROTECTION FENCE SHALL BE DONE MANUALLY UNDER THE SUPERVISION OF THE ON-SITE ARBORIST WITH PRIOR WRITTEN APPROVAL BY THE CITY PLANNING DIVISION.
- THE ABOVE REFERENCED TPZ SIGNS SHALL BE PLACED EVERY 15 FEET ALONG THE FENCING AND SHALL REMAIN IN PLACE THROUGHOUT ALL PHASES OF CONSTRUCTION.

TREE PROTECTION FENCING DETAIL
(for public and private trees)

4 TREE PROTECTION FENCING DETAIL
NTS

VEGETATION MANAGEMENT STANDARDS (2022)

8.2. SOIL QUANTITY AND QUALITY STANDARDS
ALL SOILS IN ALL LANDSCAPE INSTALLATIONS SHALL CONFORM TO THE FOLLOWING SOIL DEPTH AND QUALITY REQUIREMENTS. PLEASE REFER TO THE APPENDIX 20.9 FOR FURTHER INSTALLATION GUIDANCE:

A. A MINIMUM OF EIGHT (8) INCHES OF TOPSOIL, CONTAINING ORGANIC MATTER AT TEN (10) PERCENT DRY WEIGHT IN PLANTING BEDS, AND FIVE (5) PERCENT DRY WEIGHT IN TURF AREAS, AND A pH FROM 6.0 TO 8.0 OR MATCHING THE pH OF THE ORIGINAL UNDISTURBED SOIL. THE TOPSOIL LAYER SHALL HAVE A MINIMUM DEPTH OF EIGHT (8) INCHES EXCEPT WHERE TREE ROOTS LIMIT THE DEPTH OF INCORPORATION OF AMENDMENTS NEED TO MEET THE CRITERIA. SUBSOILS BLOW THE TOPSOIL LAYER SHOULD BE SCARIFIED AT LEAST SIX (6) INCHES WITH SOME INCORPORATION OF THE UPPER MATERIAL TO AVOID STRATIFIED LAYERS, WHERE FEASIBLE. INSTALLATION OF THE EIGHT (8) INCHES OF TOPSOIL, AS DESCRIBED ABOVE, SHALL GENERALLY BE ACHIEVED BY PLACING FIVE (5) INCHES OF IMPORTED SANDY LOAM TOPSOIL INTO PLANNED LANDSCAPE AREAS (SUB-BASE SCARIFIED FOUR (4) INCHES) WITH A THREE (3) INCH LAYER OF COMPOST TILLED INTO THE ENTIRE DEPTH.

B. FOR STREET TREES IN THE RIGHT OF WAY PLANTER STRIP, THE FOLLOWING STANDARDS SHALL APPLY IN RELATION TO SOIL DEPTH, SOIL AMENDMENTS AND INSTALLATION OF NEW STREET TREES. THE FOLLOWING NOTES SHALL BE SHOWN ON THE FACE OF THE PRELIMINARY AND FINAL LANDSCAPE PLAN SHEETS:

1) **FOR NEW CONSTRUCTION**: IN AREAS WHERE A NEW PLANTER STRIP AND STREET TREE SHALL BE ESTABLISHED OR RECONSTRUCTED DUE TO A STREET CONSTRUCTION PROJECT, THE PLANTER STRIP AREA SHALL BE EXCAVATED TO A DEPTH OF TWENTY-FOUR (24) INCHES AND BACKFILLED FOLLOWING THE STANDARD ABOVE TO ACHIEVE A TOPSOIL MIX WITH 40 PERCENT COMPOST BY VOLUME.THE CONTRACTOR OR INSTALLER SHALL:

i. **REVIEW THE CITY STANDARD PLANTING DETAIL** – ALL CONTRACTORS/INSTALLERS ARE REQUIRED TO FOLLOWING CITY STANDARD #01.02.07 (STREET TREE PLANTING) AND #01.02.03 (ROOT BARRIER INSTALLATION). THE CONTRACTOR/INSTALLER SHALL REVIEW THE PLANTING STANDARD DETAIL PRIOR TO INSTALLATION TO UNDERSTAND THE CITY'S REQUIREMENTS. FAILURE TO FOLLOW THE STANDARD MAY RESULT IN REJECTION OF THE WORK BY THE INSPECTOR AND/OR PLANNING DEPARTMENT.

ii. **SCHEDULE A FIELD PRE-CONSTRUCTION MEETING** - THE CONTRACTOR/INSTALLER SHALL CONTACT THE SITE INSPECTOR AND PLANNING DEPARTMENT FOURTY-EIGHT (48) HOURS IN ADVANCE OF THE INSTALLATION OF STREET TREE(S) FOR A FIELD PRE-CONSTRUCTION MEETING ONSITE TO REVIEW THE APPROVED PLAN SET AND CITY STANDARD DETAILS. IF STREET TREES ARE TO BE INSTALLED OVER A LONGER TIMELINE (SUCH AS A RESIDENTIAL PLAT WHERE TREES MAY BE INSTALLED OVER A MULTI-MONTH PERIOD), THE CONTRACTOR/ INSTALLER SHALL HOLD ONE CONSOLIDATED PRE-CON TO REVIEW PLANS. ALL STREET TREES SHALL BE INSPECTED AFTER PLANTING BY THE PLANNING DEPARTMENT.

iii. **EXCAVATE ALL CONSTRUCTION MATERIALS** - EXCAVATE ALL CONSTRUCTION MATERIALS, REMNANT SOIL, GRAVEL, PIT RUN, CONSTRUCTION DEBRIS, ETC. FROM THE PLANTER STRIP AREA TO A DEPTH OF TWENTY-FOUR (24) INCHES PRIOR TO PLANTING. DISCARD THIS MATERIAL AS THE PLACEMENT OF NEW COMPOST AMENDED TOPSOIL IS REQUIRED.

iv. **PREPARE THE PLANTING STRIP** - AFTER EXCAVATING ALL MATERIALS FROM THE PLANTER STRIP, SCARIFY AND RIP THE SUB-BASE WITH THE TEETH OF A BACKHOE BUCKET (OR OTHER MECHANICAL MEANS OR HAND TOOLS) TO A DEPTH OF 6" WITH MULTIPLE PASSES, 90 DEGREES TO EACH OTHER. PRIOR TO PLANTING THE TREE, RE-COMPACT THE TREE BASE WHERE THE STREET TREE WILL BE PLANTED TO AVOID SETTING OF THE ROOT BALL. AT THIS STAGE, IF THE TREE IS TO BE PLANTED WHEN THE PLANTER STRIP IS BACKFILLED WITH AMENDED TOPSOIL, THE CONTRACTOR/INSTALLER SHOULD MEASURE THE DEPTH OF THE ROOT BALL TO DETERMINE WHEN TO PLACE THE TREE IN THE PIT DURING THE BACKFILLING PROCESS. IF THE ROOT BALL OR ROOT MASS (IN THE CASE OF BARE ROOT TREES) IS LESS THAN 24", THE STREET TREE SHALL BE PLANTED IN A MANNER IN WHICH THE ROOT FLARE IS LEVEL WITH OR AT LEAST 1" ABOVE GRADE AT THE TIME OF FINISHED PLANTING. THIS MAY REQUIRE THE ROOT BALL BE PLACED ON A COMPACTED SUB-BASE OF THE COMPOST AMENDED TOPSOIL AS BACKFILLING IS OCCURRING.

v. **INSTALL ROOT BARRIER PANELS** - AT THIS STAGE THE CONTRACTOR/INSTALLER SHALL PLACE TWENTY-FOUR (24) INCH DEEP ROOT BARRIER PANELS (UB-24) ALONG THE EDGE OF THE SIDEWALK AND CURB LINE FOR A TOTAL OF EIGHT (8) FEET OF LINEAL PROTECTION ALONG EITHER SIDE OF THE PLANTING AREA. THE PANELS SHALL BE INSTALLED PERPENDICULAR TO THE EDGE OF PAVED SURFACE IN ACCORDANCE WITH THE MANUFACTURER'S STANDARDS FOR A 'LINEAR' APPLICATION; THE ROOT BARRIER PANELS SHALL NOT BE INSTALLED IN THE PLANTING PIT AS A 'SURROUND' APPLICATION, UNLESS SPECIFIED ON THE FINAL LANDSCAPE PLANS. THE TOP OF THE ROOT BARRIER PANEL SHALL BE INSTALLED SUCH THAT ONE-HALF INCH OF THE ROOT BARRIER IS ABOVE THE FINISHED GRADE.

vi. **COMPOST AMENDED TOPSOIL REQUIRED** – TOPSOIL SOURCE SHALL BE REVIEWED AND APPROVED DURING THE PRE-CONSTRUCTION MEETING; ALL TOPSOIL SHALL BE A TOP QUALITY SANDY-LOAM MIX, OR EQUIVALENT AS APPROVED BY THE PLANNING DEPARTMENT. THE TOPSOIL SHALL BE AMENDED ON SITE DURING INSTALLATION WITH COMPOST TO ACHIEVE A FORTY(40) PERCENT BY VOLUME TOPSOIL MIX IN THE RIGHT-OF-WAY
PLANTER STRIP. IMPORTED TOPSOIL MAY BE USED BY THE CONTRACTOR IF DATA 'CUT SHEETS' ARE AVAILABLE FROM THE SUPPLIER CERTIFYING COMPOST AMENDMENT EQUALING FORTY (40) PERCENT BY VOLUME USING ONE OF THE APPROVED COMPOST SOURCES BELOW. COMPOST SHALL ONLY BE SOURCED FROM:
- CASCADE COMPOST (ALSO KNOWN AS PREP/LRI) (AVAILABLE THROUGH PIERCE COUNTY RECYCLING, COMPOSTING AND DISPOSAL, 10308 SALES ROAD, TACOMA,WASHINGTON 98499, OR RETAIL/WHOLESALE LANDSCAPE MATERIAL SUPPLIERS)
- TAGRO COMPOST MIX (AVAILABLE THROUGH CITY OF TACOMA, 2201 E. PORTLAND AVENUE, GATE 6, TACOMA, WA, 98421, OR RETAIL/WHOLESALE LANDSCAPE MATERIAL SUPPLIERS)
- CEDAR GROVE COMPOST (AVAILABLE THROUGH CEDAR GROVE COMPOST, 17825 CEDAR GROVE ROAD S.E., MAPLE VALLEY, 98038, OR RETAIL/WHOLESALE LANDSCAPE MATERIAL SUPPLIERS)

vii. **INSTALL AND AMEND TOPSOIL** - TO AVOID STRATIFIED LAYERS, FIRST PLACE SEVEN (7) INCHES OF APPROVED TOPSOIL IN THE PREPARED/SCARIFIED PLANTING STRIP AREA AND MECHANICALLY TILL IN FIVE (5) INCHES OF APPROVED COMPOST; FOLLOW THIS PROCEDURE TWICE TO ACHIEVE THE TOTAL TWENTY-FOUR (24) INCHES TOPSOIL DEPTH. FINISHED GRADE OF TOPSOIL SHOULD BE ONE-HALF INCH BELOW THE EDGE OF SIDEWALK TO ALLOW THE ROOT BARRIER PANEL TO BE PROPERLY INSTALLED ABOVE FINISHED GRADE.

viii. **INSTALL TREE STAKES AND FINISH MULCH** - PLACEMENT OF FOUR (4) INCHES OF WOOD CHIP MULCH, WATER BASIN RINGS, TREE STAKING, AND TEMPORARY IRRIGATION BAGS (WHERE REQUIRED) SHALL FOLLOW CITY STANDARD #01.02.07.

B. THE PROJECT LANDSCAPE ARCHITECT SHALL UTILIZE ONE OF THE DESIGN METHODS OUTLINED IN APPENDIX 20.9 IN INCORPORATING THIS STANDARD. THE LANDSCAPE ARCHITECT SHALL ESTIMATE TOTAL TOPSOIL AND COMPOST IMPORT VOLUMES AND SPECIFY THE TOPSOIL AND COMPOST SOURCE DURING THE FINAL LANDSCAPE PLAN REVIEW. A TOPSOIL DELIVERY TICKET(S), INVOICE(S), OR OTHER PHYSICAL PROOF THAT THE CORRECT QUANTITY AND QUALITY OF TOPSOIL WAS DELIVERED SHALL BE PROVIDED AT THE TIME OF FINAL INSPECTION.

Street Tree Installation Standards Table – City of Puyallup

Criteria	Class I (Overhead Utility Street Trees)	Class II (Narrow Trees)	Class III (Medium Trees)	Class V (Large Trees)
Minimum planter strip width	4'	4'	5'	6'
On-center spacing standards	20 - 25 ft	20 - 25 ft	25 - 35 ft	30 - 40 ft
Plant under overhead utility lines?	Yes	No	No	No
Planting distance from buildings	7.5'	7.5'	10'	10'
Distance from utility and street light poles	10'	10'	10'	10'
Distance from fire hydrants	5'	5'	5'	5'
Distance from driveway (measured from the outer edge of driveway paving)	7.5'	7.5'	7.5'	7.5'
Distance from stop light signal poles	15'	15'	20'	25'
Distance from underground water, sanitary sewer or storm sewer lines	10'	10'	10'	10'
Distance from underground gas, power or other conduit	3'	3'	3'	5'
Minimum distance from intersection (as measured from the face of curb line corner at intersection)	30 ft	30 ft	30 ft	30 ft
Minimum distances from street signs (excluding parking signs)	30' from leading side, 10' from trailing side	30' from leading side, 10' from trailing side	30' from leading side, 10' from trailing side	30' from leading side, 10' from trailing side

APPROVED
FINAL LANDSCAPE PLAN
BY: ____________________
PLANNING DIVISION
DATE: ____________________
NOTE: THIS APPROVAL IS VOID AFTER 1 YEAR FROM APPROVAL DATE.
THE CITY IS NOT RESPONSIBLE FOR ERRORS AND/OR OMISSIONS ON THESE PLANS. FIELD CONDITIONS MAY DICTATE CHANGES TO THESE PLANS AS DETERMINED BY THE PLANNING DIRECTOR, DESIGNEE OR PROJECT PLANNER.

M.
Architecture ▪ Interiors
Planning ▪ Engineering

Portland, OR
503.224.9560
Vancouver, WA
360.695.7879
Seattle, WA
206.749.9993
www.mcknze.com

MACKENZIE.
DESIGN DRIVEN I CLIENT FOCUSED

Client
CREF3 PUYALLUP OWNER LLC

**11611 SAN VICENTE BLVD
10TH FLOOR
LOS ANGELES
CA 90049**

Project
FORTRESS - PUYALLUP

**240 15TH ST SE
PUYALLUP, WA, 98372**

STATE OF WASHINGTON
NICOLE R. FERREIRA
NO. 1606 EXP. 12.14.25
LICENSED LANDSCAPE ARCHITECT

© MACKENZIE 2024
ALL RIGHTS RESERVED
THESE DRAWINGS ARE THE PROPERTY OF MACKENZIE AND ARE NOT TO BE USED OR REPRODUCED IN ANY MANNER, WITHOUT PRIOR WRITTEN PERMISSION

REVISION SCHEDULE

Delta	Issued As	Issue Date
1	PLAN CHECK	12/07/2023
2	PLAN CHECK	02/22/2024
3	PLAN CHECK	TBD

SHEET TITLE:
STREET PLANTING DETAILS

DRAWN BY: LJM
CHECKED BY: NRF
SHEET:
L5.14

JOB NO. **2220290.00**

CIVIL PERMIT 12/07/2023

222029000\DRAWINGS\LANDSCAPE\290-L0.01.DWG:L5.14 CAH 06/07/24 11:33 1:1.00