STANDARD ABBREVIATIONS AND SYMBOLS

ANGLE	∠
CENTERLINE	℄
CHANNEL	⊏
DIAMETER OR ROUND	ø
NUMBER OR POUND	#
PENNY	d
PERPENDICULAR	⊥
PLATE	⅊
ANCHOR BOLT	AB
ACOUSTICAL	AC
AIR CONDITIONING	A/C
ACOUSTICAL TILE	ACT
AREA DRAIN	AD
ADDITIVE	ADD
ADHESIVE	ADH
ADJACENT	ADJ
ADJUSTABLE	ADJT
ACCESS FLOOR	AF
ABOVE FINISH FLOOR	AFF
AGGREGATE	AGG
ALUMINUM	AL
ALTERNATE	ALT
ACCESS PANEL	AP
APPROXIMATE	APPROX
ARCHITECTURAL	ARCH
ASPHALT	ASPH
ATTENUATION	ATT
ACOUSTICAL WALL FABRIC	AWF
ACOUSTICAL WALL PANEL	AWP
BOARD	BD
BETWEEN	BETW
BITUMINOUS	BITUM
BUILDING	BLDG
BLOCK	BLK
BLOCKING	BLKG
BEAM	BM
BEARING	BRG
BOTTOM	BOT
BEDROCK	BR
BRICK	BRK
BASEMENT	BSMT
BUILT-UP ROOF	BUR
CABINET	CAB
CATCH BASIN	CB
CEMENT	CEM
CERAMIC	CER
CUBIC FEET PER MINUTE	CFM
CONDUCTIVE FLOOR TILE	CFT
CORNER GUARD	CG
CHALK BOARD	CHBD
CAST IRON	CI
CONTROL JOINT	CJT
CEILING	CLG
CONSTRUCTION JOINT	CJ
CUP SINK	CS
CAULKING	CLK
CLOSET	CLO
CLEAR	CLR
CERAMIC MOSIAC TILE	CMT
CONCRETE MASONRY UNIT	CMU
COUNTER	CNTR
CLEANOUT	CO
COLUMN	COL
CONCRETE	CONC
CONNECTION	CONN
CONSTRUCTION	CONSTR
CONTINUOUS	CONT
CORRIDOR	CORR
CARPET	CPT
CASEMENT	CSMT
CERAMIC TILE	CT
CENTER	CTR
COUNTER SINK	CTSK
CUBIC YARD	CY
DOUBLE	DBL
DEPARTMENT	DEPT
DETAIL	DET
DRINKING FOUNTAIN	DF
DIONIZED WATER	DI
DIAMETER	DIA
DIAGONAL	DIAG
DIMENSION	DIM
DISPENSER	DISP
DAMPPROOFING	DMPF
DOWN	DN
DAMPER	DPR
DOWNSPOUT	DS
DISHWASHER	DW
DRAWING	DWG
EAST	E
EACH	EA
EXPANSION BOLT	EB
EXPANSION JOINT	EJ
EXTERIOR INSULATED FINISH SYSTEM	EIFS
ELEVATION	EL
ELECTRIC	ELEC
ELEVATOR	ELEV
ENTRY MAT	EM
EMERGENCY	EMER
ENCLOSURE OR ENCLOSED	ENCL
ELECTRIC PANEL BOARD	EP
EPOXY	EPX
EQUAL	EQ
EQUIPMENT	EQPT
EMERGENCY SHOWER/ EYE WASH	ESEW
ESTIMATE	EST
EXHAUST	EXH
EXPANSION	EX
EXISTING	(E)
EMERGENCY EYE WASH	EW
EXTERIOR	EXT
FIRE ALARM	FA
FLAT BAR	FB
FIBER BOARD	FBD
FURNISHED BY OTHERS	FBO
FURNISHED BY CONTRACTOR INSTALL BY CONTRACTOR	FCIC
FACTORY	FCTY
FLOOR DRAIN	FD
FOUNDATION	FDN
FIRE EXTINGUISHER	FE
FIRE EXTINGUISHER CABINET	FEC
FIBERGLASS	FGL
FIRE HOSE CABINET	FHC
FINISH	FIN
FLOOR	FL
FLASHING	FLG
FLUORESCENT	FLUOR
FACE OF CONCRETE	FOC
FACE OF FINISH	FOF
FURNISH BY OWNER INSTALL BY CONTRACTOR	FOIC
FURNISH BY OWNER INSTALL BY OWNER	FOIO
FACE OF STUD	FOS
FIREPLACE	FP
FULL SIZE	FS
FEET	FT
FIRE PROOFING	FPRF
FOOTING	FTG
FURRING	FURR
FUTURE	FUT
FUTURE ROUGH-IN ONLY	FUT-RIO
FIXED	FX
GAUGE OR GAGE	GA
GALVANIZED	GALV
GRAB BAR	GB
GENERAL CONTRACTOR	GEN CONTR
GLASS OR GLAZING	GL
GLU-LAM BEAM	GLBM
GLASS MESH MORTAR UNIT	GMMU
GROUND	GND
GRADE	GR
GYPSUM WALL BOARD	GWB
GYPSUM	GYP
HOSE BIB	HB
HARD BOARD	HBD
HOLOW CORE	HC
HAND DRYER	HD
HEADER	HDR
HARDWOOD	HDWD
HARDWARE	HDWE
HOLLOW METAL	HM
HORIZONTAL	HORIZ
HOUR	HR
HEIGHT	HT
HEATING	HTG
HEATING, VENTILATING, AIR CONDITIONING	HVAC
HOT WATER HEATER	HWH
INSIDE DIAMETER (DIMENSION)	ID
INSULATED GLAZING	IG
INSULATED HOLLOW METAL	IHM
INCLUDE	INCL
INSULATION	INSUL
INTERIOR	INT
JANITOR	JAN
JOIST	JST
JOINT	JT
KITCHEN	KIT
KNEE SPACE	KS
LABORATORY	LAB
LAMINATE	LAM
LAVATORY	LAV
LAG BOLT	LB
LENGTH	LG
LEFT HAND	LH
LOCKER	LKR
LIQUID MARKING SURFACE	LMS
LIGHT	LT
LIGHT WEIGHT CONCRETE	LWC
MACHINE	MACH
MASONRY	MAS
MATERIAL	MATL
MAXIMUM	MAX
MEDICINE CABINET	MC
MEDIUM DENSITY OVERLAY	MDO
MECHANICAL	MECH
MEMBRANE	MEMB
METAL	MET OR MTL
MEZZANINE	MEZZ
MANUFACTURER	MFR
MANHOLE	MH
MINIMUM	MIN
MIRROR	MIR
MISCELLANEOUS	MISC
MOLDING	MLD
MASONRY OPENING	MO
MOUNTED	MTD
MULLION	MULL
NORTH	N
NON-FROST SUSCEPTIBLE	NFS
NOT IN CONTRACT	NIC
NUMBER	NO
NOMINAL	NOM
NOISE REDUCTION COEFFICIENT	NRC
NOT TO SCALE	NTS
OVERALL	OA
OBSURE	OBS
ON CENTER	OC
OUTSIDE DIAMETER (DIMENSION)	OD
OFFICE	OFF
OVERHEAD	OH
OPPOSITE HAND	OPH
OPENING	OPNG
OPPOSITE	OPP
PARTICLE BOARD	PBD
PREFABRICATED	PFB
PREFINISHED	PFHB
PLATE OR PROPERTY LINE	PL
PLASTIC LAMINATE	P LAM
PLYWOOD	PLYWD
PANEL	PNL
PAINT	PNT
POLISH	POL
PAIR	PR
PRE-CAST	PRCST
PRESSURE TREATED	PT
PAPER TOWEL DISPENSER	PTD
PAPER TOWEL DISPENSER AND RECEPTACLE	PTD/R
PARTITION	PTN
PAPER TOWEL RECEPTACLE	PTR
POLYVINYL CLORIDE	PVC
PAVEMENT	PVMT
QUARRY TILE	QT
RISER	R
RETURN AIR	RA
RADIUS	RAD
RUBBER BASE	RB
ROD & SHELF	R&S
ROOF DRAIN	RD
ROOF DRAIN, OVERFLOW	RD/O
REINFORCING BAR	REBAR
REFERENCE	REF
REFIGERATOR	REFR
REINFORCED	REINF
REQUIRED	REQ
RESILIENT	RESIL
REGISTER	RGTR
RIGHT HAND OR ROBE HOOK	RH
ROOM	RM
ROUGH OPENING OR REVERSE OSMOSIS WATER	RO
ROUGH SAWN	RS
RUBBER	RUB
REVERSE	RVS
SOUTH	S
SOLID CORE	SC
SEAT COVER DISPENSER	SCD
SCHEDULE	SCHD
SOAP DISPENSER	SD
SECTION	SECT
SQUARE FEET	SF
SAFETY GLAZING	SG
SHOWER	SHR
SHEET	SHT
SHEATHING	SHTH
SOLAR INSULATED GLAZING	SIG
SIMILAR	SIM
SINK	SK
SEALER	SLR
SANITARY NAPKIN DISPENSER	SND
SANITARY NAPKIN RECEPTACLE	SNR
SEALANT	SNT
STAND PIPE	SP
SPECIFICATION	SPEC
SQUARE	SQ
STAINLESS STEEL	SST
SERVICE SINK	SSK
SOUND TRANSMISSION CLASS	STC
STANDARD	STD
STEEL	STL
STORAGE	STOR
STRUCTURAL	STRL
SUSPENDED	SUSP
SHEET VINYL OR SEAMLESS VINYL	SV
SERVICE	SVCE
SYMMETRICAL	SYM
SWITCHBOARD	SWBD
SPECIAL WALL COVERING	SWC
TREAD	T
TOWEL BAR	TB
TERRAZZO	TER
TELEPHONE	TEL
TOP AND BOTTOM	T & B
TONGUE AND GROOVE	T & G
TEMPERED GLAZING	TG
THRESHOLD	THR
TEMPERED INSULATED GLAZING	TIG
TACKBOARD	TKBD
TOP OF	TO
TOP OF CURB	TOC
TOP OF FOOTING	TOF
TOP OF PAVEMENT	TOP
TOP OF STEEL	TOS
TOP OF SLAB	TOSL
TOP OF WALL	TOW
TOILET PAPER DISPENSER	TPD
TOILET PARTITION	TPTN
TELEVISION	TV
TYPICAL	TYP
UNDERWRITERS LABORATORY	UL
UNFINISHED	UNF
UNLESS OTHERWISE NOTED	UON
URINAL	UR
VARIES	VAR
VINYL BASE	VB
VINYL CONPOSITION TILE	VCT
VAPOR RETARDER	VR
VENTILATOR	VENT
VERTICAL	VERT
VESTIBULE	VEST
VINYL	VIN
VENEER	VNR
VINYL TILE	VT
VINYL WALL COVERING	VWC
WEST	W
WITH	W/
WITHOUT	W/O
WATER CLOSET	WC
WOOD OR WIDTH	WD
WINDOW	WDW
WIRE GLASS	WG
WIRE MESH	WM
WATER PROOF	WP
WORKING POINT	WPT
WATER RESISTENT	WR
WAINSCOT	WSCT
WEIGHT	WT
WELDED WIRE FABRIC	WWF
TRANSFORMER	XFMR

INDEX

SHEET NUMBER	SHEET NAME	CONTENTS	CUP INITIAL	CUP CORR. 1	CUP FINAL	BUILDING PERMIT INITIAL
GENERAL						
G 0.0	COVERSHEET	PROJECT IFORMATION, SHEET INDEX, ABBREVIATIONS, SYMBOLS & GENERAL NOTES	○	○	○	●
G 2.0	BUILDING CODE COMPLIANCE	FIRE & LIFE SAFETY, AREA DIAGRAMS & PLUBMING CALCULATIONS	○	○	○	●
G 3.0	ANSI GUIDELINES	ACCESSIBLITY NOTES	○	○	○	●
SURVEY						
1 of 1	SURVEY		○	○	○	●
CIVIL						
C1	PRELIMINARY SITE PLAN		●	●	●	●
C2	UTILITY SITE PLAN		○	●	●	●
C3	UTILITY EXTENSION		○	●	●	●
LANDSCAPE						
EN-04	PRELIMINARY LANDSCAPE PLAN		●	●	●	●
ARCHITECTURAL						
A 1.0	SITE PLAN & ZONING COMPLIANCE	SITE PLAN, ZONING NOTES	○	●	●	●
A 2.0	FOUNDATION PLAN & EXCAVATION NOTES		○	○	○	●
A 2.1	LEVEL 1 - FLOOR PLAN	GROUND LEVEL PLAN, FLOOR PLAN NOTES	○	●	●	●
A 2.2	LEVEL 2 - FLOOR PLAN	SECOND LEVEL PLAN	○	●	●	●
A 2.3	ROOF PLAN	ROOF PLAN, SRC R806 COMPLIANCE NOTES, VENTING	○	○	○	●
A 2.4	ENLARGED STAIR PLANS AND SECTIONS	STANDARD DETAILS, GUARD OVERTURNING DTL	○	○	○	●
A 3.0	ELEVATIONS	SOUTH ELEV, WEST ELEV, DETAILS	○	○	○	●
A 3.1	ELEVATIONS	NORTH ELEV, EAST ELEV, NOTES, DETAILS	○	○	○	●
A 3.2	ELEVATIONS - COLORED	SOUTH ELEV, WEST ELEV, DETAILS	●	●	●	○
A 3.3	ELEVATIONS - COLORED	NORTH ELEV, EAST ELEV, NOTES, DETAILS	●	●	●	○
A 4.0	SECTIONS	BUILDING SECTIONS, DETAILS	○	○	○	●
A 4.1	SECTIONS	BUILDING SECTIONS, DETAILS	○	○	○	●
A 4.8	WALL SECTIONS		○	○	○	●
A 5.0	DETAILS	STANDARD DETAILS, GUARD OVERTURNING DTL	○	○	○	●
A 9.0	WINDOW & DOOR SCHEDULES, ASSEMBLIES		○	○	○	●
STRUCTURAL						
S1	GENERAL NOTES		○	○	○	●
S1.1	GENERAL NOTES		○	○	○	●
S2	FOUNDATION PLAN		○	○	○	●
S3	SECOND FLOOR FRAMING PLAN		○	○	○	●
S4	ROOF FRAMING PLAN		○	○	○	●
S5	FIRST FLOOR SHEARWALL PLAN		○	○	○	●
S5.1	SECOND FLOOR SHEARWALL PLAN		○	○	○	●
S6	CMU WALL ELEVATION		○	○	○	●
S7	FOUNDATION, CMU, SHEARWALL DETAILS		○	○	○	●
S8	FRAMING DETAILS		○	○	○	●
MECHANICAL						
M001	NOTES AND LOAD SUMMARY		○	○	○	●
M101	L1 HEATING AND COOLING PLAN		○	○	○	●
M102	MEZZANINE HEATING AND COOLING PLAN		○	○	○	●
M201	VENTILATION PLAN		○	○	○	●
M202	MEZZANINIE VENTILATION PLAN		○	○	○	●
M601	HEAT PUMP SYSTEM DETAILS		○	○	○	●
M602	MANUAL S COMPLIANCE REPORTS		○	○	○	●
ELECTRICAL						
E1	FIXTURE SCHEDULE AND SYMBOLS LEGEND		○	○	○	●
E2	LEVEL 1 LIGHTING FLOOR PLAN		○	○	○	●
E3	MEZZANINE LIGHTING FLOOR PLAN		○	○	○	●
PLUMBING						
P0.01	PLUMBING COVER SHEET		○	○	○	●
P0.02	PLUMBING SCHEDULES AND CALCULATIONS		○	○	○	●
P0.03	PLUMBING DETAILS		○	○	○	●
P1.00	PLUMBING PLAN - UNDERGROUND		○	○	○	●
P2.01	PLUMBING PLAN - LEVEL 1		○	○	○	●
P2.02	PLUMBING PLAN - LEVEL 2 MEZZANINE		○	○	○	●
P2.03	PLUMBING PLAN - ROOF		○	○	○	●
P4.01	PLUMBING RISER DIAGRAM		○	○	○	●

GENERAL NOTES

READ BEFORE BEGINNING ANY WORK

GENERAL

1. THESE DRAWINGS AND THE INFORMATION THEY DEPICT ARE INSTRUMENTS OF SERVICE FOR THE ARCHITECT AND ARE PROTECTED FULLY BY COPYRIGHT LAW. UNDER NO CIRCUMSTANCES SHALL THESE DRAWINGS BE REPRODUCED AND USED IN ANY CAPACITY WHATSOEVER TO CONSTRUCT ANY BUILDINGS OR PORTIONS OF BUILDINGS AT LOCATIONS OTHER THAN THOSE WHICH ARE DEPICTED EXPLICITLY HEREIN. IT IS THE FULL INTENTION OF THE ARCHITECT TO DEPICT A BUILDING WHICH IS COMPLIANT TO EVERY ASPECT OF CURRENT LOCAL BUILDING CODES.
2. ENERGY, MECHANICAL AND LAND USE CODE. UNDER NO CIRCUMSTANCES HAVE ANY VIOLATIONS OF SAID CODES BEEN REPRESENTED INTENTIONALLY, AND UNDER NO CIRCUMSTANCES SHOULD THESE DRAWINGS BE INTERPRETED AS SUCH. IF VIOLATIONS OF CODE ARISE THROUGH THE REVIEW AND CONSTRUCTION OF THE BUILDING(S) CONTAINED IN THIS DRAWING SET, CONTACT THE ARCHITECT IMMEDIATELY BEFORE BEGINNING OR CONTINUING WORK.
3. DO NOT SCALE DRAWINGS. CONTACT ARCHITECT IMMEDIATELY BEFORE SUBMITTING PROPOSALS, BIDS, OR PROCEEDING WITH ANY WORK IF AMBIGUITIES, DISCREPANCIES, OR A LACK OF INFORMATION EXIST IN DRAWINGS.
4. ALL DIMENSIONS ARE TO FACE OF ROUGH FRAMING MEMBER OR FACE OF CONCRETE UON.
5. THIS PLAN SET DOES NOT CONSTITUTE A FINAL CONSTRUCTION SET UNLESS STAMPED AND FINALED BY A CITY MUNICIPALITY.

SAFETY

1. RESPONSIBILITY FOR THE SAFETY OF ALL INDIVIDUALS PERFORMING FIELD WORK TO CONSTRUCT THE BUILDING DELINEATED IN THIS DRAWING SET RESTS SOLELY ON THE CONTRACTOR. BY INTENT, THESE DRAWINGS CONTAIN NO INFORMATION REGARDING THE SAFETY OF THE INDIVIDUALS PERFORMING SAID WORK AS THE CONSIDERATION OF SUCH LIES FULLY WITHIN THE DUTIES AND EXPERTISE OF THE CONTRACTOR.

INSTALLATION

1. PRIOR TO SUBMITTING SHOP DRAWINGS, FABRICATORS SHALL VERIFY ALL CONDITIONS IN THE FIELD AND PROVIDE DRAWINGS USING ON SITE FIELD MEASUREMENTS TO CONSTRUCTED FRAMING AND STRUCTURAL GRIDLINES.
2. ALL PRODUCTS, MATERIALS, AND APPLIANCES SHALL BE INSTALLED DIRECTLY ACCORDING TO THE MANUFACTURERS WRITTEN INSTRUCTIONS. IF SAID INSTRUCTIONS CALL FOR A LICENSED PERSON OF A SPECIFIC TRADE TO PERFORM INSTALLATION, WORK SHALL BE DONE AS SUCH.
3. ALL FASTENERS USED TO SECURE PRESSURE TREATED WOOD MATERIALS SHALL BE GALVANIZED OR TREATED WITH A SIMILAR CORROSION-RESISTANT COATING.

VICINITY MAP

00 — REFERENCE GRID

BUILDING SECTION — 1 SIM / A101 — DRAWING IDENTIFICATION / DRAWING SHEET LOCATION

1 SIM / A101 — DETAIL CALLOUT

W01 — WALL TYPE

F01 — FLOOR TYPE

S/C — SMOKE / CARBON DET.

DCFM — CLG MOUNTED VENT FAN

A — WINDOW TAG

101 — DOOR TAG

1 — REVISION

PROJECT NORTH

12 / 6 — ROOF PITCH

SPOT ELEVATION MARKER

SG — SAFETY GLAZING

(ELEVATION VIEW)

VICINITY MAP

TRUE NORTH

PROJECT TEAM

OWNER
SAMANTHA KEIMIG
JACKSON CASTANEDA
360.631.6019
samantha.n.keimig@gmail.com

CIVIL ENGINEER
INTERLAKEN ENGINEERING AND DESIGN, PLLC
MATTHEW HARINGA, PE
206.470.9572
matt@interlakenengineering.com

MECHANICAL ENGINEER
ENGINEERED PROJECTS CONSULTING, LLC
WESLEY VAN RITE, PE
CONTACT: AARON BARNETT
206.409.4948
aaron@buildwithbalance.com

ARCHITECT/APPLICANT
FIRST LAMP, LLC
MARK DORSEY, AIA
206.573.0775
mark@firstlamp.net

LANDSCAPE ARCHITECT
ESM CONSULTING ENGINEERS, LLC
LEANNE KUHLMAN, LA
CONTACT: JOHN EVERETT
253.838.6113
john.everett@esmcivil.com

ELECTRICAL ENGINEER
CROSS ENGINEERS, INC
STEVEN HUBBS, PE
CONTACT: SCOTT KELLY
253.759.0118
EMAIL: scottk@crossengineers.com

GENERAL CONTRACTOR
JACKSON CASTANEDA
OWNER

STRUCTURAL ENGINEER
FACET NW
JORDAN JANICKI, PE, SE
360.770.0101
jjanicki@facetnw.com

PLUMBING ENGINEER
HV ENGINEERING, INC
DUSTIN JOHNSON, CPD
206.706.9669
dustin@hvengineering.biz

PROJECT INFORMATION

OWNER	SAMANTHA KEIMIG, JACKSON CASTANEDA
SITE ADDRESS	111 5TH ST SE, PUYALLUP, WA 98372
LEGAL DESCRIPTION	LOT 2, CITY OF PUYALLUP SP NO.P`3-0085, REC. 201405145001, PIERCE COUNTY
PARCEL NUMBER	7285000112
CURRENT ZONING	CG - GENERAL COMMERCIAL
GROSS LOT AREA	10,000 SF = 0.23 AC
APPLICABLE CODES	PUYALLUP MUNICIPAL CODE WASHINGTON STATE BUILDING CODE WITH LOCAL AMENDMENTS 2021 INTERNATIONAL BUILDING CODE 2017 ICC/ANSI A117.1 ACCESSIBILITY STANDARDS 2021 INTERNATIONAL MECHANICAL CODE 2021 INTERNATIONAL FIRE CODE 2021 WILDLAND-URBAN INTERFACE CODE 2021 UNIFORM PLUMBING CODE 2021 WASHINGTON STATE ENERGY CODE 2023 NATIONAL ELECTRICAL CODE NFPA-70
PROJECT DESCRIPTION	THE PROPOSED PROJECT IS TO CONSTRUCT A NEW 4,122.36 SF SELF STORAGE FACILITY. UNIT 1 AND UNIT 2 INCLUDE A MEZZANINE OFFICE OCCUPANCY. THE PROJECT INCLUDES SITE DEVELOPMENT TO PROVIDE UTILITIES, ACCESS, AND PARKING

PROJECT SUBMITTALS

CONDITIONAL USE PERMIT	PLCUP2022162
BUILDING PERMIT	

FIRST LAMP | ARCHITECTS BUILDERS

206.414.9884
4915 RAINIER AVE S, STE 202
SEATTLE, WA 98118
INFO@FIRSTLAMP.NET

9547 REGISTERED ARCHITECT
TAYLOR BRIAN CALLAWAY
STATE OF WASHINGTON

5TH ST SE CUP
111 5TH ST SE
PUYALLUP, WA 98372

MUNICIPAL APPROVAL STAMPS

2203

PERMIT SUBMITTAL | 01.24.2025

REVISIONS

NO.	DESCRIPTION	DATE

DRAWN BY: MD

COVERSHEET

G 0.0

BUILDING CODE - GROSS FLOOR AREA

IBC GFA DEFINITION

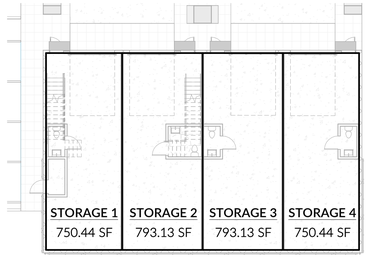

1 LEVEL 1
1/16" = 1'-0"

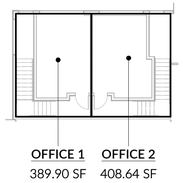

2 LEVEL 2
1/16" = 1'-0"

GROSS FLOOR AREA (IBC)	
NAME	AREA
LEVEL 1	
STORAGE 1	750.44 SF
STORAGE 2	793.13 SF
STORAGE 3	793.13 SF
STORAGE 4	750.44 SF
	3087.13 SF
LEVEL 2	
OFFICE 1	389.90 SF
OFFICE 2	408.64 SF
	798.54 SF
GRAND TOTAL	3885.67 SF

MEZZANINE NET FLOOR AREA CALCULATION

IBC NET FLOOR AREA DEFINITION

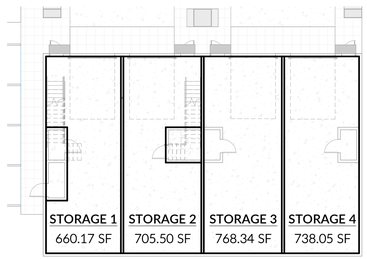

3 LEVEL 1
1/16" = 1'-0"

4 LEVEL 2
1/16" = 1'-0"

MEZZANINE AREA CALCULATION

MEZZANINE NET FLOOR AREA < 1/3 OF ROOM NET FLOOR AREA

UNIT 1 - LEVEL 1: OPEN ROOM NET FLOOR AREA	660.17 SF
MAX ALLOWED MEZZANINE NET FLOOR AREA	660.17 / 3 = 220.06 SF
PROPOSED MEZZANINE NET FLOOR AREA	219.98 SF
	219.98 SF < 220.06 SF COMPLIANT
UNIT 2 - LEVEL 1: OPEN ROOM NET FLOOR AREA	705.50 SF
MAX ALLOWED MEZZANINE NET FLOOR AREA	705.50 / 3 = 235.17 SF
PROPOSED MEZZANINE NET FLOOR AREA	227.09 SF
	227.09 SF < 235.17 SF COMPLIANT

NOTES:
1. IBC 505.2.3 EX. 1 MEZZANINE OR PORTIONS THEREOF ARE NOT REQUIRED TO BE OPEN TO THE ROOM IN WHICH THE MEZZANINES ARE LOCATED, PROVIDED THAT THE OCCUPANT LOAD OF THE AGGREGATE AREA OF THE ENCLOSED SPACE IS NOT GREATER THAN 10

FIRE & LIFE SAFETY - OCCUPANCY DIAGRAMS

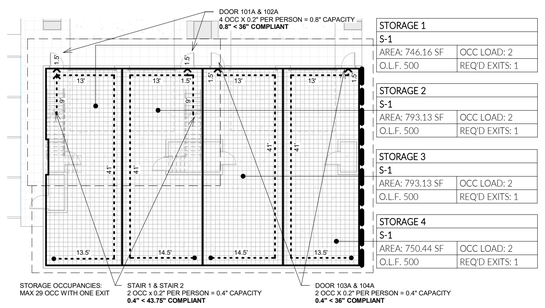

STORAGE 1	
S-1	
AREA: 746.16 SF	OCC LOAD: 2
O.L.F. 500	REQ'D EXITS: 1

STORAGE 2	
S-1	
AREA: 793.13 SF	OCC LOAD: 2
O.L.F. 500	REQ'D EXITS: 1

STORAGE 3	
S-1	
AREA: 793.13 SF	OCC LOAD: 2
O.L.F. 500	REQ'D EXITS: 1

STORAGE 4	
S-1	
AREA: 750.44 SF	OCC LOAD: 2
O.L.F. 500	REQ'D EXITS: 1

5 LEVEL 1
1/16" = 1'-0"

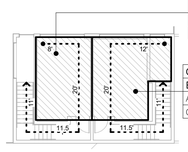

OFFICE 1 - MEZZANINE	
B	
AREA: 233.06 SF	OCC LOAD: 2
O.L.F. 150	REQ'D EXITS: 1

OFFICE 2 - MEZZANINE	
B	
AREA: 284.03 SF	OCC LOAD: 2
O.L.F. 150	REQ'D EXITS: 1

USE & OCCUPANCY

B

S-1

6 LEVEL 2 - MEZZANINE
1/16" = 1'-0"

ENERGY COMPLIANCE - FLOOR AREA DIAGRAMS

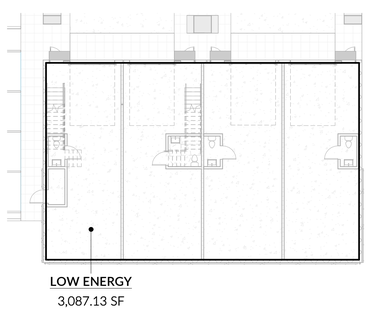

7 LEVEL 1
1/16" = 1'-0"

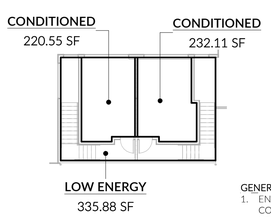

8 LEVEL 2
1/16" = 1'-0"

CONDITIONED SPACE AREAS	
Level	AREA
CONDITIONED	
LEVEL 2	452.66 SF
	452.66 SF
LOW ENERGY	
LEVEL 1	3087.13 SF
LEVEL 2	335.88 SF
	3423.01 SF
GRAND TOTAL	3875.68 SF

GENERAL NOTES
1. ENCLOSED SEMI-HEATED SPACE WITHIN A BUILDING, INCLUDING ADJACENT CONNECTED SPACES SEPARATED BY AN UNINSULATED COMPONENT (BASEMENTS, UTILITY ROOMS, GARAGES, COORDIFORS), WHICH IS HEATED BUT NOT COOLED AND HAS AN INSTALLED HEATING SYSTEM OUTPUT CAPACITY GREATER THAN OR EQUAL TO 3.4 BTU/(H-FT2) BUT NOT GREATER THAN 8 BTU/(H-FT2).
2. SPACE CONDITIONING CATEGORY. CATEGORIES ARE BASED ON THE ALLOWED PEAK SPACE CONDITIONING OUTPUT CAPACITY PER SQUARE FOOT OF CONDITIONED FLOOR AREA, OR THE DESIGN SET POINT TEMPERATURE, FOR A BUILDING OR SPACE. SPACE CONDITIONING CATEGORIES FROM LOWEST TO HIGHEST INCLUDE: LOW ENERGY, SEMI-HEATED, CONDITIONED, REFRIGERATED WALK-IN AND WAREHOUSE COOLERS, AND REFRIGERATED WALK-IN AND WAREHOUSE FREEZERS.
3. UNCONDITIONED SPACE. AN ENCLOSED SPACE WITHIN A BUILDING THAT IS NOT A CONDITIONED SPACE AND THAT IS NOT CATEGORIZED UNDER SECTION C402.1.1. CRAWLSPACES, ATTICS AND PARKING GARAGES WITH NATURAL OR MECHANICAL VENTILATION ARE NOT CONSIDERED ENCLOSED SPACES.

FIRE & LIFE SAFETY NOTES

GENERAL NOTES
1. IBC 906 PORTABLE FIRE EXTINGUISHERS TO BE CLASS 2-A; LOCATE EVERY 75'-0" MAX. EXTENGUISHERS WEIGHING LESS THAN 40LBS GROSS WEIGHT TO BE INSTALLED AT 5'-0" MAX TO TOP AFF (906.7)
2. 1020.5 DEAD ENDS. WHERE MORE THAN ONE EXIT OR EXIT ACCESS DOORWAY IS REQUIRED, THE EXIT ACCESS SHALL BE ARRANGED SUCH THAT DEAD-END CORRIDORS DO NOT EXCEED 20 FEET IN LENGTH.

COMMON PATH OF EGRESS TRAVEL (IBC TABLE 1006.2.1)
DISTANCE OF TRAVEL BEFORE CHOICE OF TWO EXITS
WITHOUT SPRINKLER FOR PRIMARY USES IN PROJECT
MAX OCC LOAD OF 30 OR LESS
B, S = 100'

EXIT ACCESS TRAVEL DISTANCE (IBC TABLE 1017.2)
WITHOUT SPRINKLER FOR PRIMARY USES IN PROJECT
B, S-1 = 200'

COMMON PATH

EXIT ACCESS TRAVEL PATH

FIRE SEPARATION - IBC 508.4

3 HOUR SEPARATION

2 HOUR SEPARATION

1 HOUR SEPARATION

NR SEPARATION

EGRESS STAIR CAPACITY CALCULATIONS

STAIRWAY UNIT 1 & UNIT 2 - EGRESS CAPACITY CALCULATION PER SBC 1005.3.1
OFFICE MEZZANINE OCC COUNT = 2
2 x 0.2" PER PERSON = 0.4" CAPACITY
PROPOSED STAIR WIDTH = 42.75"
0.4" < 42.75" WIDE STAIR PROVIDED (COMPLIANT)

EGRESS DOOR CAPACITY CALCULATIONS

DOORS 101A & 102A - EGRESS CAPACITY CALCULATION
OFFICE MEZZANINE OCC COUNT = 2
STORAGE OCC COUNT = 2
4 x 0.2" PER PERSON = 0.8" CAPACITY
PROPOSED DOOR WIDTH = 36"
0.8" < 36" WIDE DOOR PROVIDED (COMPLIANT)

DOORS 103A & 104A - EGRESS CAPACITY CALCULATION
STORAGE OCC COUNT = 2
2 x 0.2" PER PERSON = 0.4" CAPACITY
PROPOSED DOOR WIDTH = 36"
0.4" < 36" WIDE DOOR PROVIDED (COMPLIANT)

OCCUPANCY AREAS

AREA NAME	USE & OCCUPANCY CLASSIFICATION	SF PER PERSON	AREA	TOTAL OCCUPANT LOAD	# OF EXITS
UNIT 1					
OFFICE 1 - MEZZANINE	B	150	233.06 SF	2	1
STORAGE 1	S-1	500	746.16 SF	2	1
			979.22 SF		
UNIT 2					
OFFICE 2 - MEZZANINE	B	150	284.03 SF	2	1
STORAGE 2	S-1	500	793.13 SF	2	1
			1,077.16 SF		
UNIT 3					
STORAGE 3	S-1	500	793.13 SF	2	1
			793.13 SF		
UNIT 4					
STORAGE 4	S-1	500	750.44 SF	2	1
			750.44 SF		

BUILDING CODE COMPLIANCE

PER IBC 2021

OCCUPANCY GROUP/USE: IBC 311.3 STORAGE GROUP S-1 / SELF SERVICE STORAGE FACILITY
IBC 304.1 BUSINESS GROUP B / OFFICE ACCESSORY OCCUPANCY

CONSTRUCTION TYPE: V-B

FIRE PROTECTION: NO AUTOMATIC SPRINKLER SYSTEM (IBC 903.2.9)

FIRE ALARM SYSTEM: AUTOMATIC SMOKE DETECTION SYSTEM (907.2.15 HIGH-PILED STORAGE AREAS)

ALLOWABLE BUILDING HEIGHTS AND AREAS:
ALLOWABLE BUILDING HEIGHT ABOVE GRADE PLANE = 40' (504.3, S-1)
ALLOWABLE NUMBER OF STORIES = 1 STORY (504.4, S-1)

MAX BUILDING AREA FACTOR = 9,000 SF (508.3.2, S-1)
HEIGHT MEASURED IN FEET ABOVE AVERAGE GRADE PLANE PER IBC DEFINITION

PROPOSED BUILDING HEIGHT AND AREAS:
TOTAL BUILDING HEIGHT = 23' - 8 1/4"
TOTAL BUILDING AREA = 3,885.67 SF (GROSS FLOOR AREA)

FIRE RESISTANCE:

FIRE RESISTANCE RATING BY CONSTRUCTION TYPE (IBC TABLE 601)
CONSTRUCTION TYPE VB

STRUCTURAL FRAME	0
BEARING WALLS:	
EXTERIOR	0
INTERIOR	0
NON-BEARING WALLS & PARTITIONS:	
EXTERIOR (SEE TABLE 705.5)	0
INTERIOR	0
FLOOR AND ASSOC. SECONDARY MEMBERS	0
ROOF AND ASSOC. SECONDARY MEMBERS	0

FIRE SEPARATION DISTANCE:

FIRE RESISTANCE RATING BASED ON SEPARATION DISTANCE (IBC TABLE 705.5)
CONSTRUCTION TYPE VB, OCCUPANCY S-1

X < 5'	= 2 HR
5' ≤ X < 10'	= 1 HR
10' ≤ X < 30'	= 0
X ≥ 30'	= 0

SEPARATED OCCUPANCIES:

OCCUPANCY SEPARATION REQUIREMENTS - SBC TABLE 508.4

OCC.1	OCC.2	HOURS
S-1	B	NO SEPARATION

ALLOWABLE AREA OF UNPROTECTED OPENINGS:
ALLOWABLE UNPROTECTED OPENINGS (IBC TABLE 705.8)
FOR UNPROTECTED, NONSPRINKLERED BUILDINGS

X < 3'	NOT PERMITTED
3' ≤ X < 5'	NOT PERMITTED
5' ≤ X < 10'	10% MAX OPENING
10' ≤ X < 15'	15% MAX OPENING
15' ≤ X < 20'	25% MAX OPENING
20' ≤ X < 25'	45% MAX OPENING
25' ≤ X < 30'	70% MAX OPENING
X ≥ 30'	NO LIMIT

ACCESSIBILITY: IBC 1104.4 EX1 AN ACCESSIBLE ROUTE IS NOT REQUIRED TO STORIES, MEZZANINES AND OCCUPED ROOFS THAT HAVE AN AGGREGATE AREA OF NOT MORE THAN 3,000 SF.

1109.3 SELF-SERVICE STORAGE FACILITIES. SELF-SERVICE STORAGE FACILITIES SHALL PROVIDE ACCESSIBLE INDIVIDUAL SELF-STORAGE SPACES IN ACCORDANCE WITH TABLE 1109.3

PLUMBING FIXTURE TABULATION BY LEVEL AND OCCUPANCY - UNIT 1 , UNIT 2

BUILDING LEVEL	NAME	OCCUPANCY	FIXTURE COUNT RATIOS: WATER CLOSETS MALE	WATER CLOSETS FEMALE	LAVATORIES	TOTAL OCCUPANTS (1)	OCCUPANT LOAD (1/2 total occup.) MALE	OCCUPANT LOAD FEMALE	WATER CLOSETS MALE	WATER CLOSETS FEMALE	LAVATORIES MALE	LAVATORIES FEMALE
LEVEL 1	STORAGE	S-1	1/100	1/100	1/100	2	1.00	1.00	0.01	0.01	0.01	0.01
LEVLE 2	OFFICE	B	1/25	1/25	1/40	2	1.00	1.00	0.04	0.04	0.025	0.025
					TOTAL	**4**		SUBTOTAL	0.05	0.05	0.035	0.035
								TOTAL FIXTURE COUNT	**1**	**1**	**1**	**1**

FOOTNOTES:
(1) TOTAL OCCUPANTS PER 2021 IBC TABLE 1004.5 MAXIMUM FLOOR AREA ALLOWANCES PER OCCUPANT.

PLUMBING FIXTURE TABULATION BY LEVEL AND OCCUPANCY - UNIT 3, UNIT 4

BUILDING LEVEL	NAME	OCCUPANCY	FIXTURE COUNT RATIOS: WATER CLOSETS MALE	WATER CLOSETS FEMALE	LAVATORIES	TOTAL OCCUPANTS (1)	OCCUPANT LOAD (1/2 total occup.) MALE	OCCUPANT LOAD FEMALE	WATER CLOSETS MALE	WATER CLOSETS FEMALE	LAVATORIES MALE	LAVATORIES FEMALE
LEVEL 1	STORAGE	S-1	1/100	1/100	1/100	2	1.00	1.00	0.01	0.01	0.01	0.01
					TOTAL	**2**		SUBTOTAL	0.01	0.01	0.035	0.035
								TOTAL FIXTURE COUNT	**1**	**1**	**1**	**1**

FOOTNOTES:
(1) TOTAL OCCUPANTS PER 2021 IBC TABLE 1004.5 MAXIMUM FLOOR AREA ALLOWANCES PER OCCUPANT.

PROJECT NORTH

FIRST LAMP ARCHITECTS BUILDERS

206.414.9884
4915 RAINIER AVE S, STE 202
SEATTLE, WA 98118
INFO@FIRSTLAMP.NET

9547 REGISTERED ARCHITECT
TAYLOR BRIAN CALLAWAY
STATE OF WASHINGTON

5TH ST SE CUP
111 5TH ST SE
PUYALLUP, WA 98372

MUNICIPAL APPROVAL STAMPS

2203

PERMIT SUBMITTAL | 01.24.2025

REVISIONS

NO.	DESCRIPTION	DATE

DRAWN BY: MD

BUILDING CODE COMPLIANCE

G 2.0

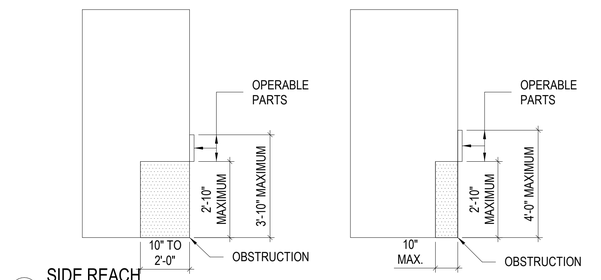

11 SIDE REACH
3/8" = 1'-0"

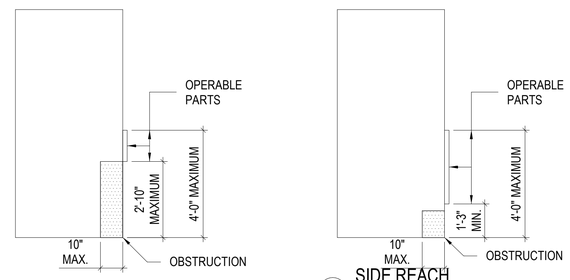

10 SIDE REACH
3/8" = 1'-0"

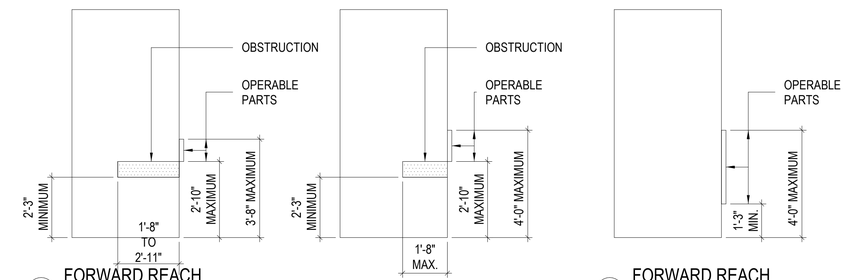

09 FORWARD REACH
3/8" = 1'-0"

08 FORWARD REACH
3/8" = 1'-0"

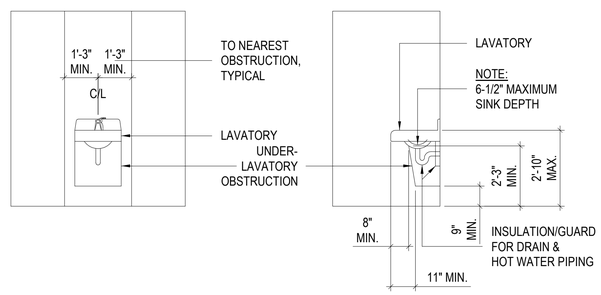

07 LAVATORY
3/8" = 1'-0"

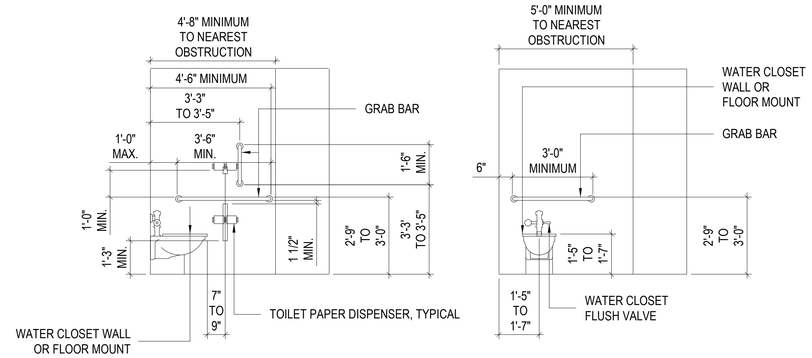

06 WATER CLOSET
3/8" = 1'-0"

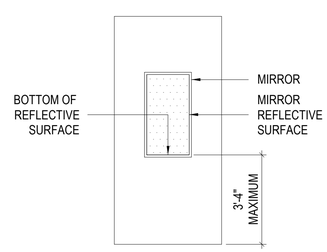

05 MIRROR
3/8" = 1'-0"

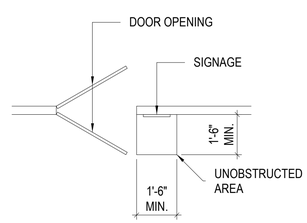

03 INTERIOR SIGNAGE
3/8" = 1'-0"

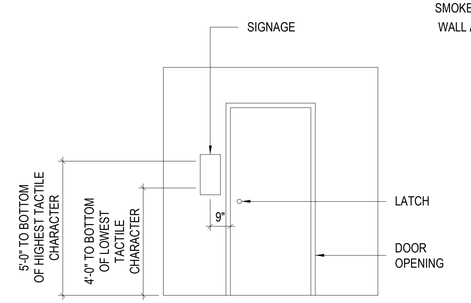

02 INTERIOR SIGNAGE
3/8" = 1'-0"

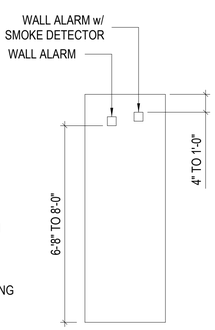

01 VISUAL ALARMS
3/8" = 1'-0"

NOTES:

01. ELEVATIONS ARE FOR ICC/ANSI A117.1-2009 ACCESSIBILITY GUIDELINES REFERENCE ONLY.

02. DETAIL NUMBER REFERS TO ICC/ANSI A117.1-2003 ACCESSIBILITY GUIDELINES CHAPTER NUMBER.

03. NOT ALL ACCESSIBILITY DIAGRAMS MAY BE APPLICABLE TO PROJECT REQUIREMENTS.

FIRST LAMP ARCHITECTS BUILDERS
206.414.9884
4915 RAINIER AVE S, STE 202
SEATTLE, WA 98118
INFO@FIRSTLAMP.NET

9547 REGISTERED ARCHITECT
TAYLOR BRIAN CALLAWAY
STATE OF WASHINGTON

5TH ST SE CUP
111 5TH ST SE
PUYALLUP, WA 98372

MUNICIPAL APPROVAL STAMPS

2203

PERMIT SUBMITTAL | 01.24.2025

REVISIONS

NO.	DESCRIPTION	DATE

DRAWN BY: MD

ANSI GUIDELINES

G 3.0

A PORTION OF THE SW 1/4 OF SECTION 27, T. 20 N., R. 4 E., W.M.

n

SCALE : 1"=20'

20' 10' 0 20' 40'

1' CONTOUR INTERVAL

FOUND 3" BRASS DISC WITH "X" SET IN CONCRETE, DOWN 0.7', IN CASE (JANUARY 2022)

LEGAL DESCRIPTION

LOT 2, CITY OF PUYALLUP SHORT PLAT NUMBER P-13-0085, ACCORDING TO THE PLAT THEREOF RECORDED MAY 14, 2014 UNDER RECORDING NUMBER 201405145001, RECORDS OF THE PIERCE COUNTY AUDITOR;

SITUATE IN THE CITY OF PUYALLUP, COUNTY OF PIERCE, STATE OF WASHINGTON.

NOTES

1. THE LEGAL DESCRIPTION HEREON DESCRIBES THE SAME PROPERTY AS INSURED IN FIRST AMERICAN TITLE INSURANCE COMPANY ALTA COMMITMENT FOR TITLE INSURANCE FILE NO. 4265-3676271 DATED JANUARY 26, 2021. THERE ARE NO TITLE GAPS OR OVERLAPS BETWEEN THE LEGAL DESCRIPTIONS OF THE PROPERTIES ADJOINING THE SURVEYED PROPERTY.

2. NO CORNERS HAVE BEEN SET IN CONJUNCTION WITH THIS SURVEY.

3. THE ADDRESS FOR THE SURVEYED PROPERTY IS 111 5TH STREET S.E., PUYALLUP, WA 98371.

4. THE SURVEYED PROPERTY DEPICTED AND DESCRIBED HEREON ENCLOSES A TOTAL AREA OF 9,995 SQUARE FEET (0.229 ACRES), MORE OR LESS.

5. THE SURVEYED PROPERTY ADJOINS A PUBLIC ALLEY WHICH CONNECTS TO 5TH STREET S.E. AND 7TH STREET S.E.

6. ALL TIES ARE SHOWN EITHER ALONG THE PROPERTY LINE OR PERPENDICULAR TO THE PROPERTY LINE OF THE SURVEYED PROPERTY. OFFSET DISTANCES ARE SHOWN ON THE SAME SIDE OF THE PROPERTY LINE THAT THE OBJECT APPEARS.

7. SURVEYED PROPERTY IS PIERCE COUNTY ASSESSOR PARCEL NO. 7285000112.

8. THERE ARE NO PLOTTABLE EASEMENTS AFFECTING THE SURVEYED PROPERTY. SEE THE ABOVE REFERENCED REPORT FOR OTHER ENCUMBRANCES WHICH APPLY TO THE SURVEYED PROPERTY.

9. THE POSITION OF SURFACE FEATURES (CATCH BASINS, LIGHTS, BUILDING, ETC) ARE FROM ACTUAL FIELD LOCATIONS. THE POSITION OF UNDERGROUND UTILITIES SHOWN HEREON ARE BASED ON THE FOLLOWING SOURCES: SURVEYED LOCATIONS OF VISIBLE SURFACE INDICATIONS OBSERVED IN THE FIELD; AND UNDERGROUND UTILITY LOCATES PROVIDED BY MT. VIEW LOCATING SERVICES LLC, IN JANUARY 2022. THE LOCATION OF BURIED UTILITIES SHOWN HEREON SHOULD BE CONSIDERED APPROXIMATE AND REQUIRES FIELD VERIFICATION PRIOR TO ANY DEMOLITION OR CONSTRUCTION WORK ON OR AROUND THE SITE.

REFERENCE SURVEYS

R1 PLAT OF D.M. ROSS FIRST ADDITION TO THE TOWN OF PUYALLUP RECORDED 1889-04-05

R2 SURVEY BY WHITACRE ENGINEERS, INC. – RS 19761006 #1468

R3 SURVEY BY RIIPINEN SURVEYING – RECORDING NO. 9509200250

R4 SURVEYS BY DELTA SURVEYING – RECORDING NOS. 9603270728 AND 9703120051

R5 SURVEY BY PARAMETRIX, INC. – RECORDING NO. 200307015003

R6 SURVEY BY AZURE GREEN – RECORDING NO. 200703215007

R7 SURVEYS BY CASCADE LAND SURVEYING – RECORDING NOS. 200808195005 AND SP FOR SITE 201405145001

R8 SURVEY BY SADLER/BARNARD & ASSOC. INC. – RECORDING NO. 201407085003

R9 SURVEYS BY PRIZM SURVEYING – RECORDING NOS. 201503275002 AND 201606155003

LEGEND

GATE END
GUARD POST/BOLLARD
SIGN
GAS METER
GAS VALVE
POWER CONDUIT
POWER GUY ANCHOR
POWER POLE
POWER POLE WITH DROP
POWER POLE WITH LIGHT
POWER TRANSFORMER
STORM CB
STORM CO
STORM MANHOLE
SANITARY SEWER MANHOLE
FOUND MONUMENT IN CASE AS NOTED
FOUND PK AND WASHER AS NOTED
FOUND REBAR AND CAP AS NOTED
TELEPHONE POLE
WATER FIRE HYDRANT
WATER METER
WATER VALVE

BUILDING LINE
BUILDING OVERHANG
BOARD FENCE
CHAIN LINK FENCE
EDGE GRAVEL/RIPRAP
RAILROAD TRACKS
GAS
POWER UNDERGROUND
POWER OVERHEAD
SANITARY SEWER
STORM DRAINAGE
TELEPHONE UNDERGROUND
TELEPHONE OVERHEAD
WATER

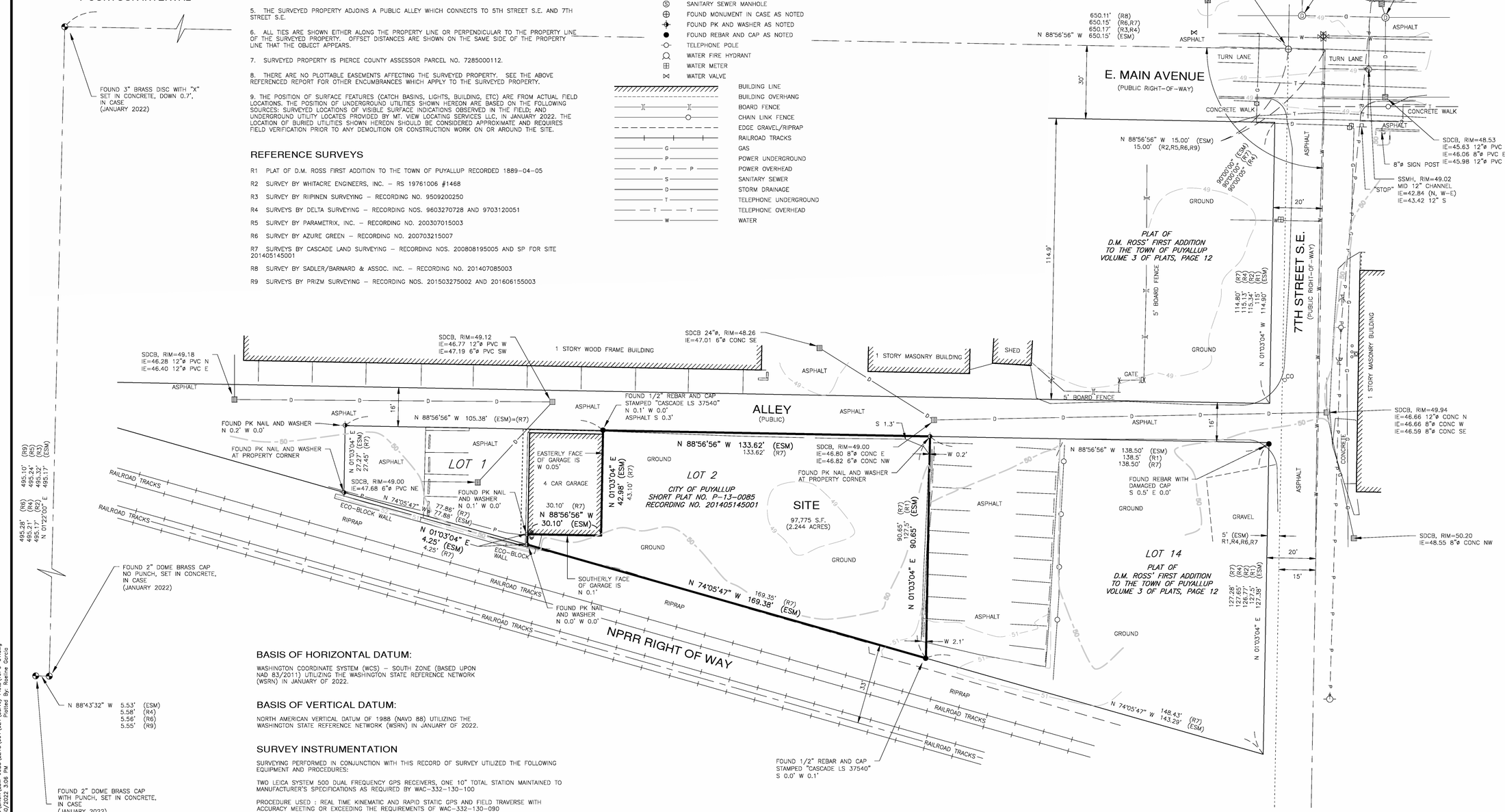

BASIS OF HORIZONTAL DATUM:

WASHINGTON COORDINATE SYSTEM (WCS) – SOUTH ZONE (BASED UPON NAD 83/2011) UTILIZING THE WASHINGTON STATE REFERENCE NETWORK (WSRN) IN JANUARY OF 2022.

BASIS OF VERTICAL DATUM:

NORTH AMERICAN VERTICAL DATUM OF 1988 (NAVD 88) UTILIZING THE WASHINGTON STATE REFERENCE NETWORK (WSRN) IN JANUARY OF 2022.

SURVEY INSTRUMENTATION

SURVEYING PERFORMED IN CONJUNCTION WITH THIS RECORD OF SURVEY UTILIZED THE FOLLOWING EQUIPMENT AND PROCEDURES:

TWO LEICA SYSTEM 500 DUAL FREQUENCY GPS RECEIVERS, ONE 10" TOTAL STATION MAINTAINED TO MANUFACTURER'S SPECIFICATIONS AS REQUIRED BY WAC-332-130-100

PROCEDURE USED : REAL TIME KINEMATIC AND RAPID STATIC GPS AND FIELD TRAVERSE WITH ACCURACY MEETING OR EXCEEDING THE REQUIREMENTS OF WAC-332-130-090

File: \\esmfs\INSR\ESM-JOBS\2218\001\021\Survey Plats\TOPO-01.dwg
Plotted: 3/30/2022 8:08 PM Plotted By: Roderick Garcia

REVISIONS

NO.	DESCRIPTION/DATE	BY

ZACHARY T. LENYKEN
STATE OF WASHINGTON
34925
REGISTERED PROFESSIONAL LAND SURVEYOR
03/30/2022

ESM CONSULTING ENGINEERS LLC
334400 8th Ave S, Suite 205
Federal Way, WA 98003
FEDERAL WAY (253) 838-6113
EVERETT (425) 297-9900
www.esmcivil.com
Civil Engineering | Land Planning
Public Works | Land Surveying
Project Management | Landscape Architecture

CASTANEDA & KEIMIG

5TH STREET S.E. CUP

CITY OF PUYALLUP BOUNDARY AND TOPOGRAPHICAL SURVEY WASHINGTON

JOB NO.:	2218-001-021
DWG. NAME:	TOPO-01
DESIGNED BY:	
DRAWN BY:	CF/RG
CHECKED BY:	
DATE:	2022-03-30
DATE OF PRINT:	

TOPO-01

1 OF 1 SHEETS

A PORTION OF THE SE $\frac{1}{4}$ OF SEC 27, TWP 20 N, RGE 04 E

5TH STREET CONDITIONAL USE PERMIT

PRELIMINARY SITE PLAN

IMPERVIOUS SURFACING

OFFSITE:
NEW: 338 SF
REPLACED: 0 SF
TOTAL (OFFSITE): 338 SF

ON-SITE:
NEW (PLAZA/WALK): 829 SF
NEW (PARKING): 2,087 SF
NEW (BUILDING): 4,028 SF
REPLACED: 0 SF
TOTAL (ON-SITE): 6,944 SF
TOTAL IMPERVIOUS: 7,282 SF

BUILDING DATA

FAR – GROSS FLOOR AREA – ZONING CODE
LEVEL 1 = 3,233.78 SF
LEVEL 2 – MEZZANINE = 888.59 SF
TOTAL = 4,122.36 SF

OCCUPANCY – GROSS FLOOR AREA – BUILDING CODE
TOTAL = 3,599.94 SF
GROUND LEVEL: 3,082.85 SF OF S-1 OCCUPANCY
MEZZANAINE: 517.09 SF OF B OCCUPANCY

TYPE OF CONSTRUTION
PER IBC: V-B

SITE DATA

SITE ADDRESS: 111 5TH ST SE
PUYALLUP WA, 98372

PARCEL NUMBER: 7285000112

SITE AREA GROSS: 10,000 SF = 0.23 AC

ZONING: CG – GENERAL COMMERCIAL

PARKING

PARKING STALLS REQUIRED PER PMC 20.55.010(16) MANUFACTURING AND INDUSTRIAL USE:

EMPLOYEE WORK AREA (NET): 563.75 SF
STORAGE AREA (NET): 2,811.27 SF

(563.75 SF) X (1 SPACE/500 SF OF EMPLOYEE WORK AREA)
= 1.13 = 1 SPACE
(2,811.27 SF) X (1 SPACE/1000 SF OF STORAGE)
= 2.81 = 3 SPACES

PARKING PROVIDED: 4 SPACES

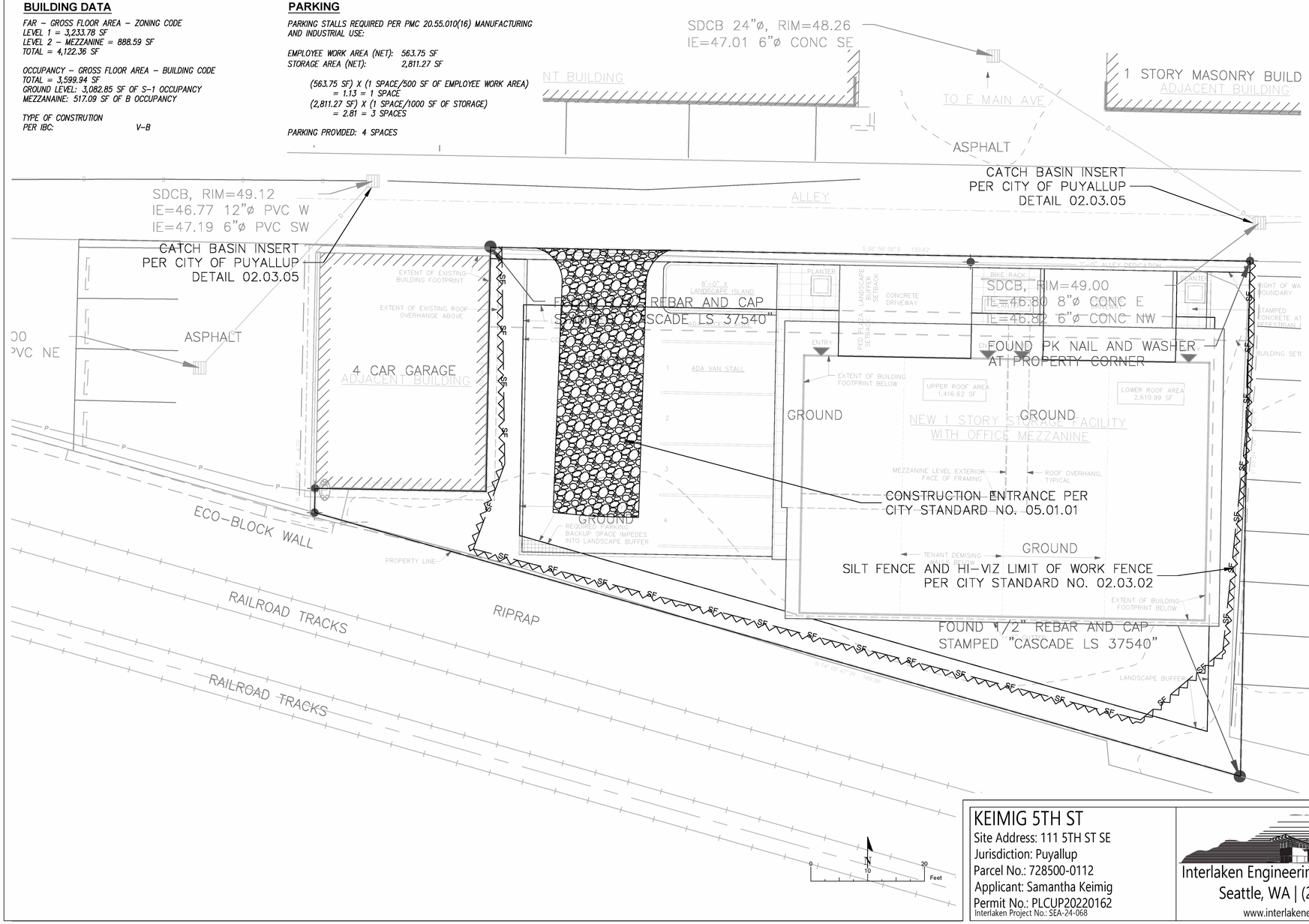

CITY OF PUYALLUP
STANDARD NOTES FOR DRAINAGE PLANS

1. All work in City right-of-way requires a permit from the City of Puyallup. Prior to any work commencing, the general contractor shall arrange for a preconstruction meeting at the Development Services Center to be attended by all contractors that will perform work shown on the engineering plans, representatives from all applicable Utility Companies, the project owner and appropriate City staff. Contact Engineering Services to schedule the meeting (253) 841-5568. The contractor is responsible to have their own approved set of plans at the meeting.

2. After completion of all items shown on these plans and before acceptance of the project, the contractor shall obtain a "punch list" prepared by the City's inspector detailing remaining items of work to be completed. All items of work shown on these plans shall be completed to the satisfaction of the City prior to acceptance of the water system and provision of sanitary sewer service.

3. All materials and workmanship shall conform to the Standard Specifications for Road, Bridge, and Municipal Construction (hereinafter referred to as the "Standard Specifications"), Washington State Department of Transportation and American Public Works Association, Washington State Chapter, latest edition, unless superseded or amended by the City of Puyallup City Standards for Public Works Engineering and Construction (hereinafter referred to as the "City Standards").

4. A copy of these approved plans and applicable city developer specifications and details shall be on site during construction.

5. Any revisions made to these plans must be reviewed and approved by the developer's engineer and the Engineering Services Staff prior to any implementation in the field. The City shall not be responsible for any errors and/or omissions on these plans.

6. The contractor shall have all utilities verified on the ground prior to any construction. Call 811 at least two working days in advance. The owner and his/her engineer shall be contacted immediately if a conflict exists.

7. Any structure and/or obstruction which require removal or relocation relating to this project, shall be done so at the developer's expense.

8. During construction, all existing and newly installed drainage structures shall be protected from sediments.

9. All storm manholes shall conform to City Standard Detail No. 02.01.01. Flow control manhole/oil water separator shall conform to City Standard Detail No. 02.01.06 and 02.01.07.

10. Manhole ring and cover shall conform to City Standard Detail 06.01.02.

11. Catch basins Type I shall conform to City Standard Detail No.02.01.02 and 02.01.03 and shall be used only for depths less than 5 feet from top of the grate to the invert of the storm pipe.

12. Catch basins Type II shall conform to City Standard Detail No.02.01.04 and shall be used for depths greater than 5 feet from top of the grate to the invert of the storm pipe.

13. Cast iron or ductile iron frame and grate shall conform to City Standard Detail No.02.01.05. Grate shall be marked with "drains to stream". Solid catch basin lids (square unless noted as shall conform to WSDOT Standard Plan B-30.20-04 (Olympic Foundry No. SM60 or equal). Vaned grates shall conform to WSDOT Standard Plan B-30.30-03 (Olympic Foundry No. SM60V or equal).

14. Stormwater pipe shall be only PVC, concrete, ductile iron, or dual walled Polypropylene pipe.

a. The use of any other type shall be reviewed and approved by the Engineering Services Staff prior to installation.

b. PVC pipe shall be per ASTM D3034, SDR 35 for pipe size 15-inch and smaller and F679 for pipe sizes 18 to 27 inch. Minimum cover on PVC pipe shall be 3.0 feet.

c. Concrete pipe shall conform to the WSDOT Standard Specifications for concrete underdrain pipe. Minimum cover on concrete pipe shall not less than 3.0 feet.

d. Ductile iron pipe shall be Class 50, conforming to AWWA C151. Minimum cover on ductile iron pipe shall be 1.0 foot.

e. Polypropylene Pipe (PP) shall be dual walled, have a smooth interior and exterior corrugations and meet WSDOT 9-05.24(1). 12-inch through 30-inch pipe shall meet or exceed ASTM F2736 and AASHTO M330, Type S, or Type D. 36-inch through 60-inch pipe shall meet or exceed ASTM F2881 and AASHTO M330, Type S, or Type D. Testing shall be per ASTM F1417. Minimum cover over Polypropylene pipe shall be 3-feet.

15. Trenching, bedding, and backfill for pipe shall conform to City Standard Detail No. 06.01.01.

16. Storm pipe shall be a minimum of 10 feet away from building foundations and/or roof lines.

17. All storm drain mains shall be tested and inspected for acceptance as outlined in Section 406 of the City of Puyallup Sanitary Sewer System Standards.

18. All temporary sedimentation and erosion control measures, and protective measures for critical areas and significant trees shall be installed prior to initiating any construction activities.

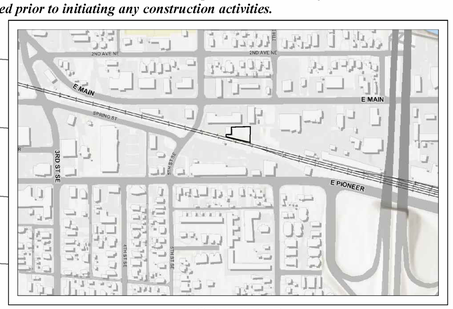

VICINITY MAP
1" ≈ 1000'

SEE C2 FOR UTILITY SITE PLAN
SEE C3 FOR UTILITY EXTENSION

KEIMIG 5TH ST
Site Address: 111 5TH ST SE
Jurisdiction: Puyallup
Parcel No.: 728500-0112
Applicant: Samantha Keimig
Permit No.: PLCUP20220162
Interlaken Project No.: SEA-24-068

Interlaken Engineering and Design, PLLC
Seattle, WA | (206) 470-9572
www.interlakenengineering.com

MATTHEW JACOB HAMMON
STATE OF WASHINGTON
55763
REGISTERED
PROFESSIONAL ENGINEER

Revisions:

C1
COVER/TESC
Scale: 1" = 10'

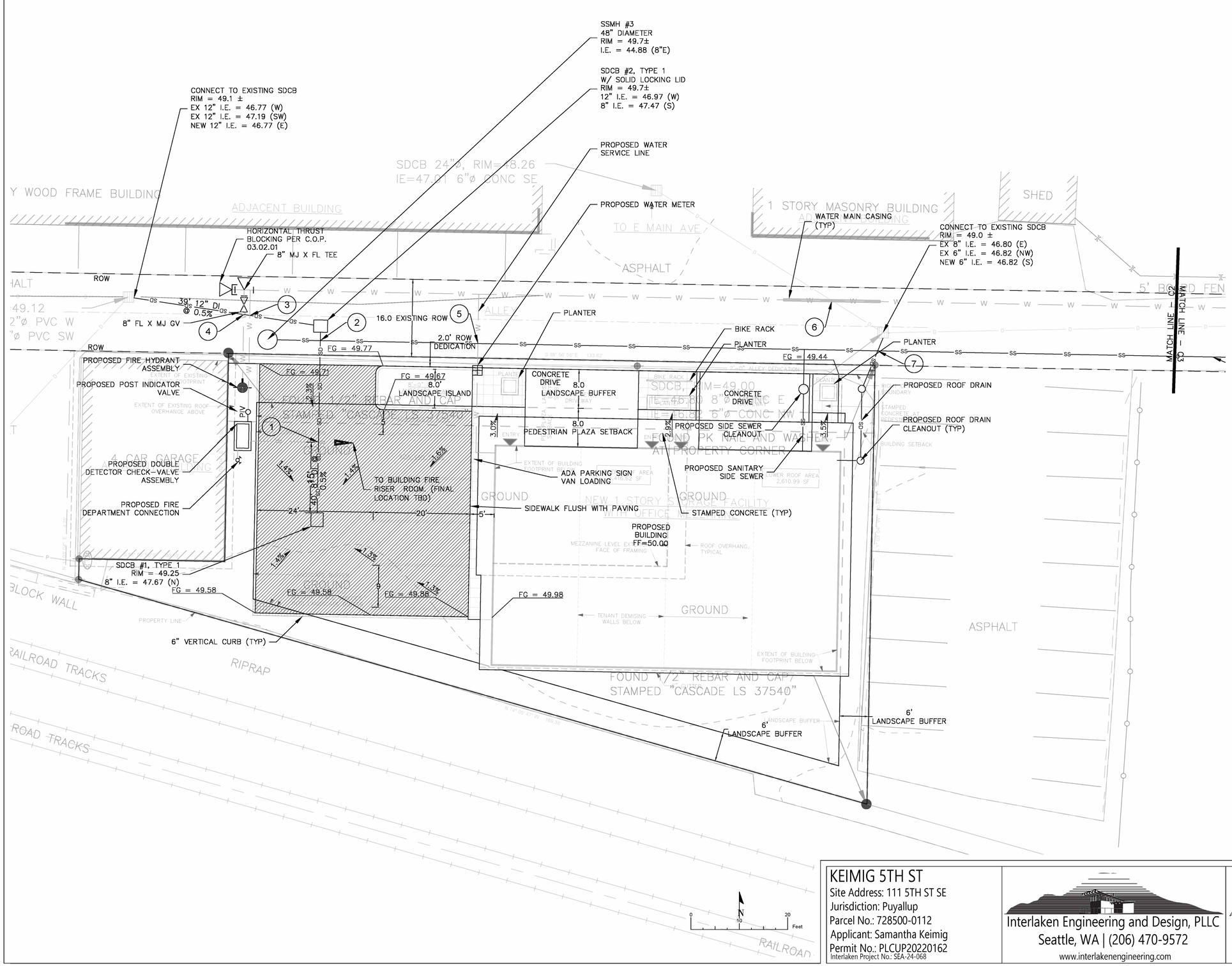

UTILITY CROSSING TABLE

WATER MAIN TO BE ENCASED FOR 10' ON EITHER SIDE OF CROSSING WITH NON-POTABLE UTILITY.

1. *Proposed 6" Water Crown = 46.60*
   Proposed 6" Water Invert = 46.10
   Proposed 8" Storm Crown =48.27
   Proposed 8" Storm Invert =47.60
   Clearance =1'
2. *Proposed 8" Sanitary Crown = 45.51*
   Proposed 8" Storm Invert =47.48
   Clearance = 1.97'
3. *Proposed 12" Storm Crown = 47.91*
   Proposed 12" Storm Invert = 46.91
   Proposed 6" Water Crown = 45.91
   Proposed 6" Water Invert = 45.41
   Clearance =1'
4. *Proposed 12" Storm Crown = 47.89*
   Proposed 12" Storm Invert = 46.89
   Proposed 6" Water Crown = 45.39
   Proposed 6" Water Invert = 44.89
   Clearance = 1'
5. *Proposed 2" (Assumed) Water Invert = 49.32*
   Proposed 8" Sanitary Crown = 45.39
   Clearance =3.93
6. *Proposed 8" Water Crown =45.86*
   Proposed 8" Water Invert =45.19
   Existing 6" Storm Crown =47.36
   Existing 6" Storm Invert =46.86
   Clearance =1'
7. *Proposed 8" Sanitary Crown =45.05*
   Proposed 6" Storm Invert =46.83
   Clearance =1.78'

SEE C1 FOR TESC/NOTES
SEE C3 FOR UTILITY EXTENSION

KEIMIG 5TH ST
Site Address: 111 5TH ST SE
Jurisdiction: Puyallup
Parcel No.: 728500-0112
Applicant: Samantha Keimig
Permit No.: PLCUP20220162
Interlaken Project No.: SEA-24-068

Interlaken Engineering and Design, PLLC
Seattle, WA | (206) 470-9572
www.interlakenengineering.com

MATTHEW JACOB HARINGER
STATE OF WASHINGTON
55763
REGISTERED PROFESSIONAL ENGINEER

Revisions:

C2
Utility Site Plan
Scale: 1" = 10'

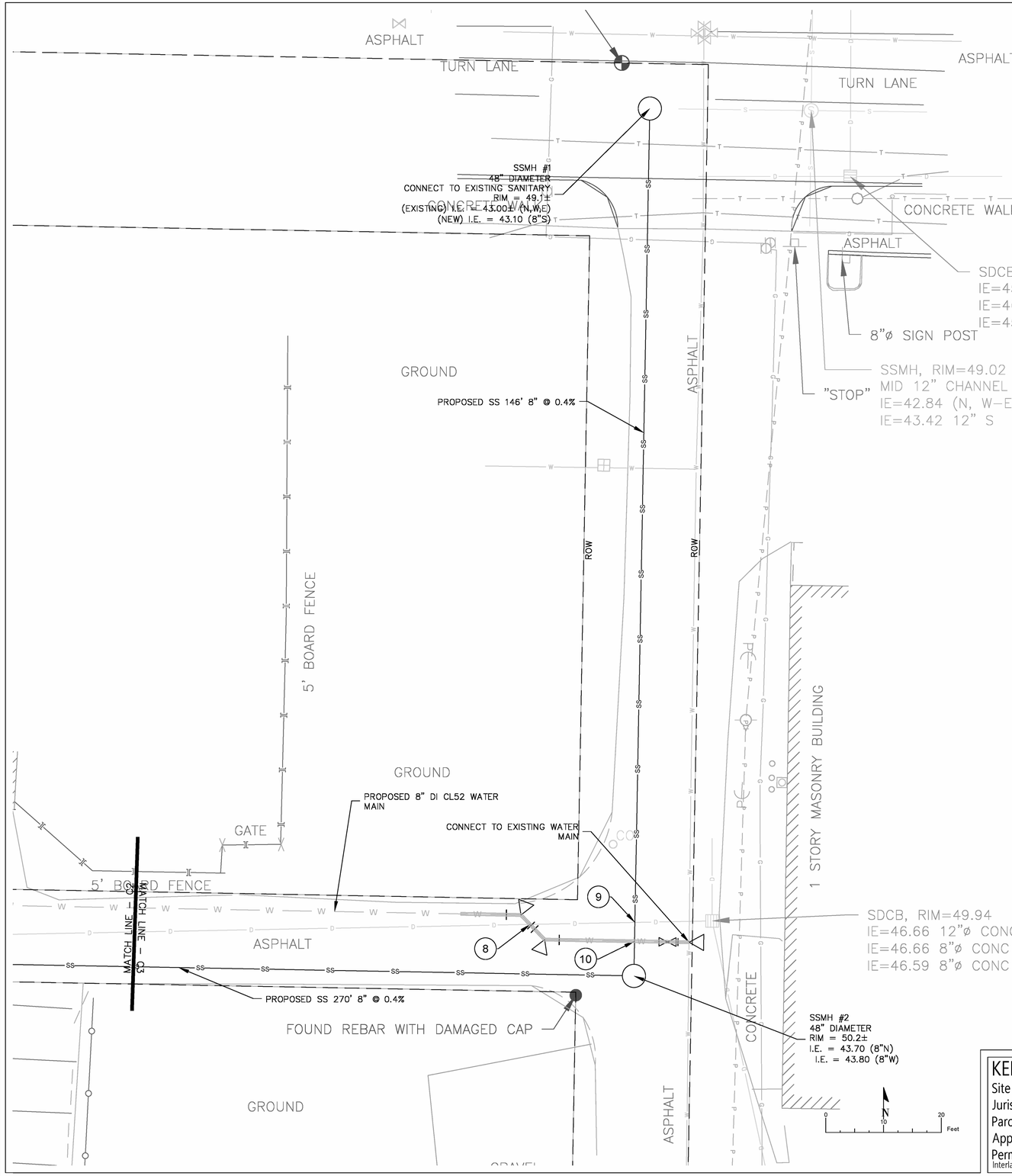

UTILITY CROSSING TABLE

WATER MAIN TO BE ENCASED FOR 10' ON EITHER SIDE OF CROSSING WITH NON-POTABLE UTILITY.

(8) *Proposed 8" Water Crown = 45.63*
Proposed 8" Water Invert = 44.96
Existing 8" Storm Crown = 47.30
Existing 8" Storm Invert =46.63
Clearance =1'

(9) *Proposed 8" Sanitary Crown =44.34*
Existing 8" Storm Invert =46.67
Clearance =2.33'

(10) *Proposed 8" Water Crown = 45.35*
Proposed 8" Water Invert = 44.68
Proposed 8" Sanitary Crown = 43.68
Proposed 8" Sanitary Invert = 43.01
Clearance =1'

SEE C1 FOR TESC/NOTES
SEE C2 FOR UTILITY SITE PLAN

KEIMIG 5TH ST
Site Address: 111 5TH ST SE
Jurisdiction: Puyallup
Parcel No.: 728500-0112
Applicant: Samantha Keimig
Permit No.: PLCUP20220162
Interlaken Project No.: SEA-24-068

Interlaken Engineering and Design, PLLC
Seattle, WA | (206) 470-9572
www.interlakenengineering.com

MATTHEW JACOB HASINGER
STATE OF WASHINGTON
55763
REGISTERED PROFESSIONAL ENGINEER

Revisions:

C3
Utility Extension
Scale: 1" = 10'

A PORTION OF THE SE 1/4 OF SEC 27, TWP 20 N, RGE 04 E

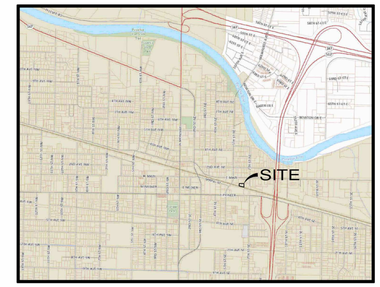

VICINITY MAP
NOT TO SCALE

n

SCALE: 1" = 20'
20 10 0 20 40
CONTOUR INTERVAL = 1'

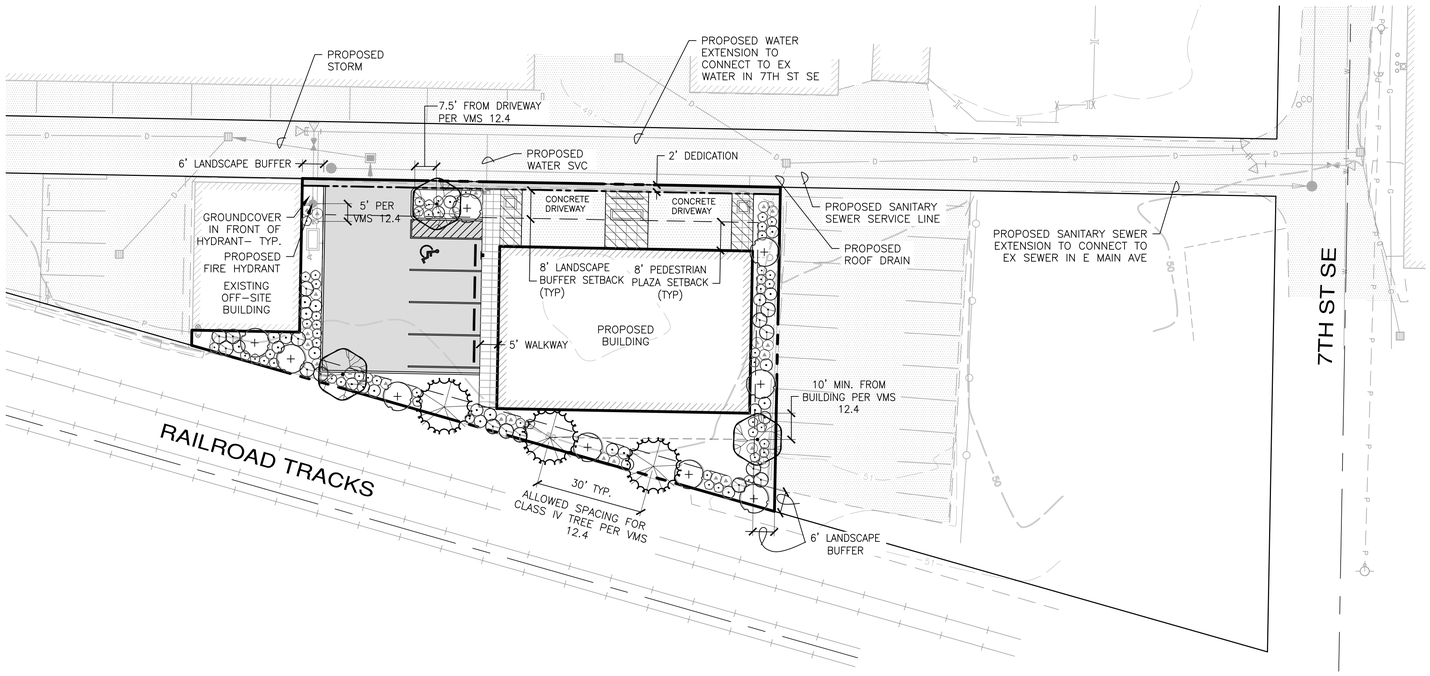

LEGEND

("N" NEAR THE PLANT SYMBOL DENOTES A NATIVE SPECIES)

SYMBOL

PEDESTRIAN PLAZA WITH SITE AMENITIES, INCLUDING LANDSCAPE PLANTERS

BOTANICAL / COMMON NAME	QUANTITY	SIZE	VMS CLASS	COMMENTS
TREES*:				
Acer platanoides 'Emerald Queen' / EMERALD QUEEN NORWAY MAPLE	3	1-1/2" CAL., 6' MIN. HT.	CLASS III- MEDIUM	B&B, STRONG CENTRAL SINGLE LEADER
N Abies grandis / GRAND FIR	3	6' MIN. HT.	CLASS IV- LARGE	B&B, FULL, VIGOROUS

* TREE SPECIES SELECTION PER 2022 VEGETATION MANAGEMENT STANDARDS (VMS)- CLASSES III AND IV
ALL TREE PLANTING SHALL MEET VMS INSTALLATION STANDARDS 12.4

SHRUBS:			
Physocarpus opulifolius 'Diabolo' / DIABOLO NINEBARK	10	5 GAL., 24" MIN., 6'+ MAT. HT.	
N Cornus sericea 'Kelseyi' / DWARF REDTWIG DOGWOOD	27	5 GAL., 24" MIN., 6'+ MAT. HT.	
N Symphoricarpos albus / SNOWBERRY	16	5 GAL., 24" MIN., 6'+ MAT. HT.	
Erica carnea 'Myretoun Ruby' / 'MYRETOUN RUBY' WINTER HEATH	52	5 GAL., 18" MIN.	
Carex testacea 'Indian Summer'/ PRAIRIE FIRE SEDGE	23	2 OR 5 GAL., FULL	

GROUNDCOVERS:
(To be planted in all available areas within the landscape buffer at 24" triangular on-center spacing to achieve 75% coverage within 3 years)

SUN:
Rubus calycinoides / CREEPING BRAMBLE

SHADE:
Pachysandra terminalis / JAPANESE SPURGE

PRELIMINARY LANDSCAPE PLAN DATA

PER FMC 20.58 AND THE CITY OF PUYALLUP VEGETATION MANAGEMENT STANDARDS MANUAL, TYPE II LANDSCAPING CONSISTS OF A SINGLE ROW OF MEDIUM TO LARGE TREES (OR SMALL TREES IF OVERHEAD UTILITIES ARE PRESENT) SUITABLY SPACED IN ASSOCIATION WITH A 50/50 MIX OF EVERGREEN AND DECIDUOUS SHRUBS TO PROVIDE THE MINIMUM 75 PERCENT VISUAL SEPARATION UP TO A HEIGHT OF 4.5 FEET ABOVE THE LOCAL GRADE WITHIN THREE YEARS. TREES SHALL BE PLANTED AT INTERVALS OF NO GREATER THAN 30 FEET, APPROPRIATE SHRUB MASSES AND LIVING GROUND COVER SHALL PROVIDE 75 PERCENT GROUND AREA COVERAGE WITHIN THREE YEARS. SHRUBS SHALL BE PLACED AT 5-7 FOOT CENTER INTERVALS THROUGHOUT THE PLANTING AREA, WITH GROUND COVER PLANTINGS PLACED 18-36"ON-CENTER INTERVALS. SHRUBS SHALL BE ALTERNATED, MODULATED AND DESIGNED TO PROVIDE A VISUAL VARIATION IN HEIGHT, DEPTH, CONTRASTING COLORS AND TEXTURES.

A SINGLE ROW OF VMS APPROVED SPECIES TREES IS PROVIDED AT 30' ON-CENTER SPACING PER VMS REQUIREMENTS ALONG THE SOUTH PERIMETER LANDSCAPE BUFFER. THE 6' WIDTH LANDSCAPE BUFFERS ON THE WEST AND EAST ARE ADJACENT TO EXISTING AND PROPOSED BUILDING WALLS, RESPECTIVELY. PER VMS 12.4, 10' WIDTH IS REQUIRED BETWEEN TREES AND BUILDING WALLS, THEREFORE, NO TREES ARE PROPOSED IN THESE BUFFERS.

A 50/50 MIX OF EVERGREEN AND DECIDUOUS SHRUB SPECIES OF VARYING HEIGHTS, COLORS AND TEXTURES IS PROVIDED WITHIN ALL PERIMETER LANDSCAPE BUFFERS. THE LARGEST SPECIES WILL REACH A MINIMUM OF 4.5' ABOVE GRADE WITHIN 3 YEARS.

GROUNDCOVER SPECIES ARE SPECIFIED IN THE LEGEND AT 24" TRIANGULAR ON-CENTER SPACING IN ALL AVAILABLE PLANTING AREAS WITHIN THE PERIMETER LANDSCAPE BUFFERS. COVERAGE WILL ACHIEVE 75% WITHIN 3 YEARS.

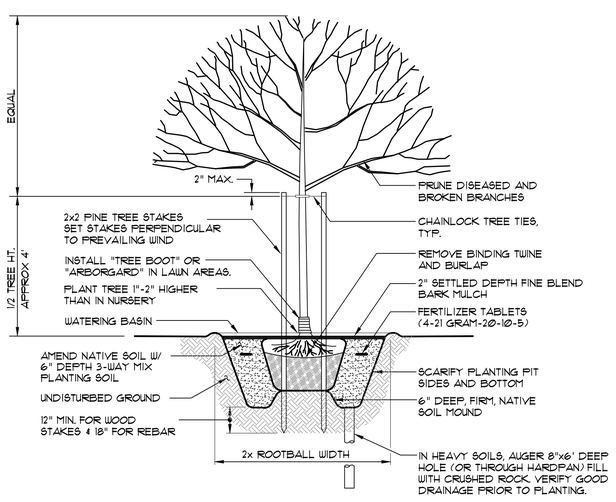

DECIDUOUS TREE PLANTING & STAKING DETAIL
NOT TO SCALE

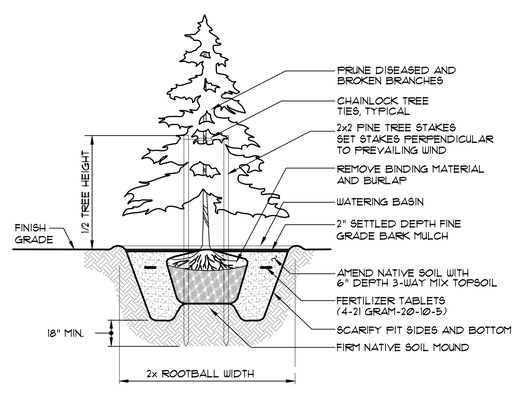

CONIFEROUS TREE PLANTING & STAKING DETAIL
NOT TO SCALE

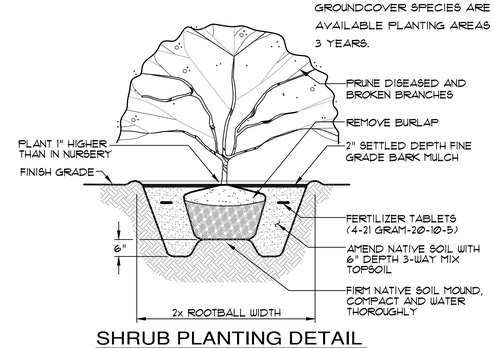

SHRUB PLANTING DETAIL
NOT TO SCALE

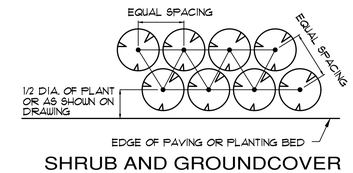

SHRUB AND GROUNDCOVER SPACING DETAIL
NOT TO SCALE

File: \\esm-8\ENGR\ESM-JOBS\2218\001\021\exhibits\EN-04.dwg
Plotted: 11/16/2023 4:07 PM Plotted By: Steven Sharp

REVISIONS

NO.	DESCRIPTION/DATE	BY
1	REVISED PER CITY 1/21/2023 COMMENTS	ESM
1	PER CITY COMMENTS 02/09/2023	ESM

11/16/2023

STATE OF WASHINGTON REGISTERED LANDSCAPE ARCHITECT
LEANNE D. KUHLMAN
CERTIFICATE No. 743

ESM CONSULTING ENGINEERS LLC
334400 8th Ave S, Suite 205
Federal Way, WA 98003
FEDERAL WAY (253) 838-6113
EVERETT (425) 297-9900
www.esmcivil.com
Land Planning
Landscape Architecture
Land Surveying
Project Management
Civil Engineering
Public Works

JACKSON CASTANEDA & SAMANTHA KEIMIG

5TH ST CONDITIONAL USE PERMIT

CITY OF PUYALLUP WASHINGTON

PRELIMINARY LANDSCAPE PLAN

JOB NO.:	2218-001-021
DWG. NAME:	EN-04
DESIGNED BY:	LDK
DRAWN BY:	LDK
CHECKED BY:	
DATE:	09/27/2023
DATE OF PRINT:	

EN-04

FAR - GROSS FLOOR AREA DIAGRAMS

ZONING CODE GFA DEFINITION

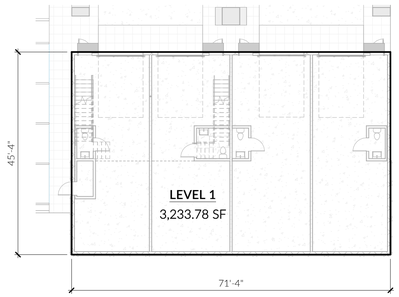

2 LEVEL 1
1/16" = 1'-0"

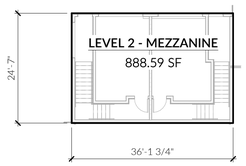

3 LEVEL 2
1/16" = 1'-0"

FAR - GROSS FLOOR AREA - ZONING	
LEVEL	AREA
LEVEL 1	3,233.78 SF
LEVEL 2	888.59 SF
TOTAL	4,122.36 SF

AVERAGE ADJOINING GRADE CALCULATION

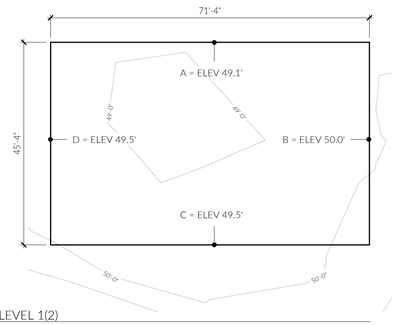

4 LEVEL 1(2)
1/16" = 1'-0"

EXISTING SITE CONTOURS
SURVEY TOPO-01 3/30/2022

SEGMENTS	MID-POINT ELEVATION	SEGMENT LENGTH	ELEVATION x LENGTH
A	49.10	71.33	3,502.303
B	50.00	45.33	2266.500
C	49.50	71.33	3530.835
D	49.50	45.33	2243.835
Total		**233.32**	**11543.473**
			11543.473 / 233.32
AVERAGE GRADE LEVEL ELEVATION			**49.47**

TRANSPARENCY DIAGRAMS - PMC 20.26.300 2. (d)

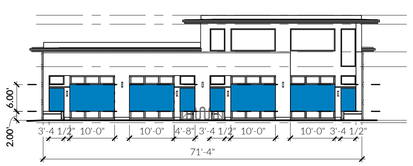

NORTH ELEVATION
5 STREET FACING FACADE ELEVATION
1/16" = 1'-0"

PMC 20.26.300 2. (d) 60% OF TOTAL HORIZONTAL WALL AREA BETWEEN TWO AND EIGHT FEET ABOVE THE EXTERIOR GRADE, SHALL CONSIST OF WINDOWS AND/OR TRANSPARENT DOORWAYS.

WINDOWS AND/OR TRANSPARENT DOORWAYS AREA = 309.13 SF
WALL AREA = 71.33 FT X 6.00 FT = 427.98 SF
309.13 / 424.02 = 0.7290 (72.23%)
72.23% > 60% COMPLIANT

PEDESTRIAN PLAZA AMENITIES LEGEND

- **PA-1** PRE-CAST CONCRETE PLANTER WITH 18" DEEP WOOD BENCH
  FINISH: NATURAL CONCRETE, MEDIUM GRAY
- **PA-2** BIKE RACK WITH 4 SPACES MINIMUM
  FINISH: STAINLESS STEEL AND BLACK
- **PA-3** DECORATIVE STAMPED CONCRETE AT PEDESTRIAN PLAZA WALKWAY AND DRIVEWAY
  FINISH: TBD
- **PA-4** DECORATIVE PEDESTRIAN SCALE BENT STEEL AWNING AT UNIT ENTRIES
  FINISH: PAINTED BLACK
- **PA-5** DECORATIVE PEDESTRIAN SCALE LIGHTING AT SWING DOOR ENTRIES, SEE BUILDING ELEVATION 1/A3.0
  FIXTURE TBD, FINISH BLACK

PROJECT INFORMATION

OWNER	SAMANTHA KEIMIG, JACKSON CASTANEDA
SITE ADDRESS	111 5TH ST SE, PUYALLUP, WA 98372
LEGAL DESCRIPTION	LOT 2, CITY OF PUYALLUP SP NO.P-`3-0085, REC. 201405145001, PIERCE COUNTY
PARCEL NUMBER	7285000112
CURRENT ZONING	CG - GENERAL COMMERCIAL
GROSS LOT AREA	10,000 SF = 0.23 AC
APPLICABLE CODES	PUYALLUP MUNICIPAL CODE WASHINGTON STATE BUILDING CODE WITH LOCAL AMENDMENTS 2021 INTERNATIONAL BUILDING CODE 2017 ICC/ANSI A117.1 ACCESSIBILITY STANDARDS 2021 INTERNATIONAL MECHANICAL CODE 2021 INTERNATIONAL FIRE CODE 2021 WILDLAND-URBAN INTERFACE CODE 2021 UNIFORM PLUMBING CODE 2021 WASHINGTON STATE ENERGY CODE 2023 NATIONAL ELECTRICAL CODE NFPA-70
PROJECT DESCRIPTION	THE PROPOSED PROJECT IS TO CONSTRUCT A NEW 4,122.36 SF SELF STORAGE FACILITY, UNIT 1 AND UNIT 2 INCLUDE A MEZZANINE OFFICE OCCUPANCY. THE PROJECT INCLUDES SITE DEVELOPMENT TO PROVIDE UTILITIES, ACCESS, AND PARKING

ZONING CODE - COMPLIANCE SUMMARY

PUYALLUP MUNICIPAL CODE

SITE ZONE: SITE AREA:		CG - GENERAL COMMERCIAL 10,000 SF
LOT COVERAGE LOT COVERAGE ALLOWED LOT COVERAGE PROPOSED	PMC TABLE 20.30.030	75% .75 X 10,000 SF = 7,500 SF 4,027.61 SF < 7,500 SF COMPLIANT
FLOOR AREA RATIO FLOOR AREA ALLOWED	PMC TABLE 20.30.030	4.0 FAR 4 x 10,000 = 40,000 SF
LEVEL 1 LEVEL 2 - MEZZANINE FLOOR AREA PROPOSED		3,233.78 SF 888.59 SF TOTAL = 4,122.36 SF 4,122.36 SF < 40,000 SF COMPLIANT
STRUCTURE HEIGHT MAXIMUM ALLOWED STRUCTURE HEIGHT PROPOSED	PMC TABLE 20.30.030	50.00 FT 22.50 FT 22.50 FT < 50.00 FT COMPLIANT
REQUIRED YARD SETBACK FRONT AND STREET SIDE REAR INTERIOR SIDE	PMC 20.30.037	 12FT MIN / 20FT MAX 0 0
STREET FRONTAGE MINIMUM	PMC TABLE 20.30.030	35FT MIN

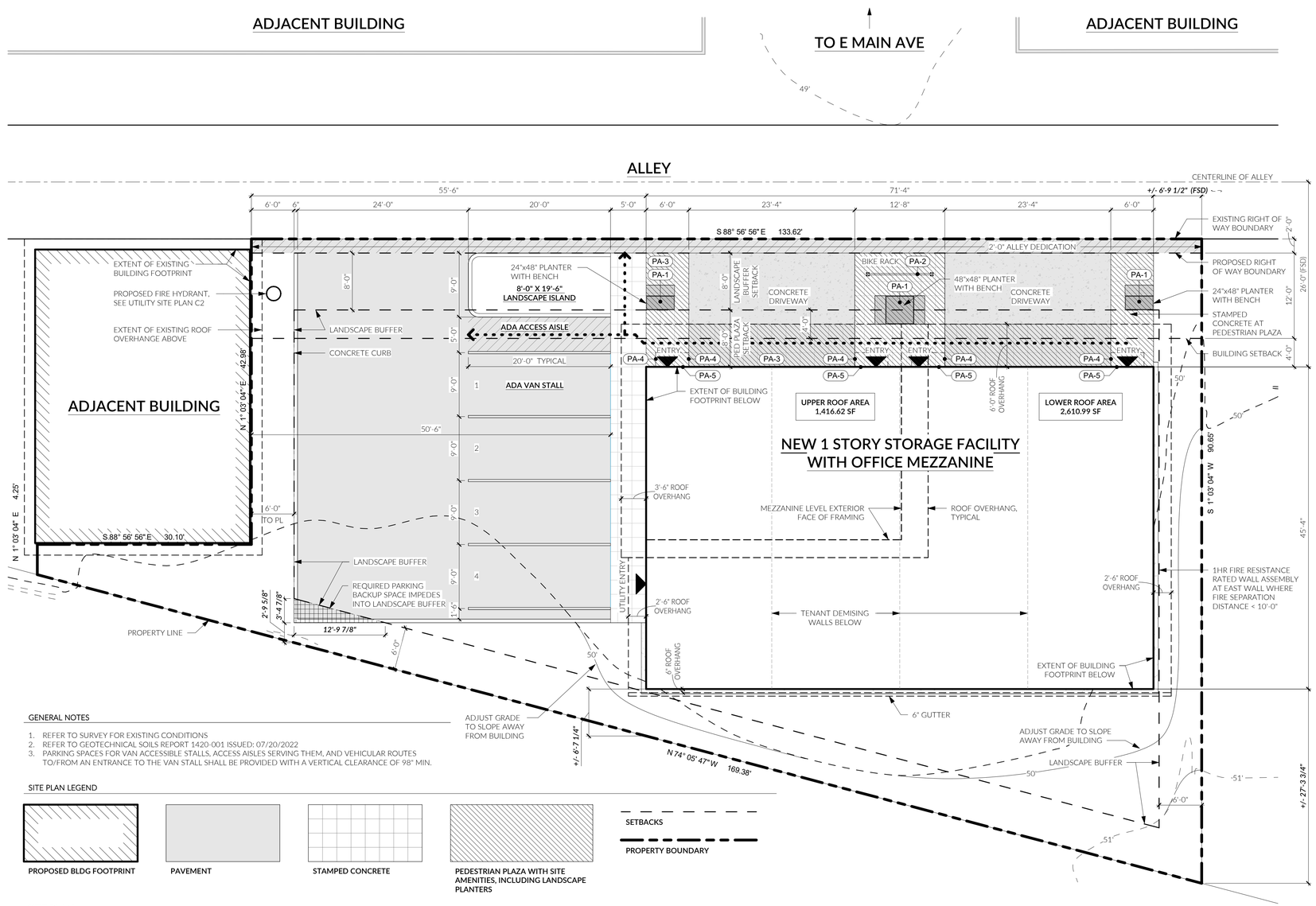

GENERAL NOTES

1. REFER TO SURVEY FOR EXISTING CONDITIONS
2. REFER TO GEOTECHNICAL SOILS REPORT 1420-001 ISSUED: 07/20/2022
3. PARKING SPACES FOR VAN ACCESSIBLE STALLS, ACCESS AISLES SERVING THEM, AND VEHICULAR ROUTES TO/FROM AN ENTRANCE TO THE VAN STALL SHALL BE PROVIDED WITH A VERTICAL CLEARANCE OF 98" MIN.

SITE PLAN LEGEND

PROPOSED BLDG FOOTPRINT | PAVEMENT | STAMPED CONCRETE | PEDESTRIAN PLAZA WITH SITE AMENITIES, INCLUDING LANDSCAPE PLANTERS | SETBACKS | PROPERTY BOUNDARY

1 SITE PLAN
1/8" = 1'-0"

FIRST LAMP ARCHITECTS BUILDERS
206.414.9884
4915 RAINIER AVE S, STE 202
SEATTLE, WA 98118
INFO@FIRSTLAMP.NET

9547 REGISTERED ARCHITECT
TAYLOR BRIAN CALLAWAY
STATE OF WASHINGTON

5TH ST SE CUP
111 5TH ST SE
PUYALLUP, WA 98372

MUNICIPAL APPROVAL STAMPS

2203

PERMIT SUBMITTAL | 01.24.2025

REVISIONS

NO.	DESCRIPTION	DATE
1	DRT CORR. 1	9/27/2023
2	DRT FINAL	11/16/2023

DRAWN BY: MD

SITE PLAN & ZONING COMPLIANCE

A 1.0

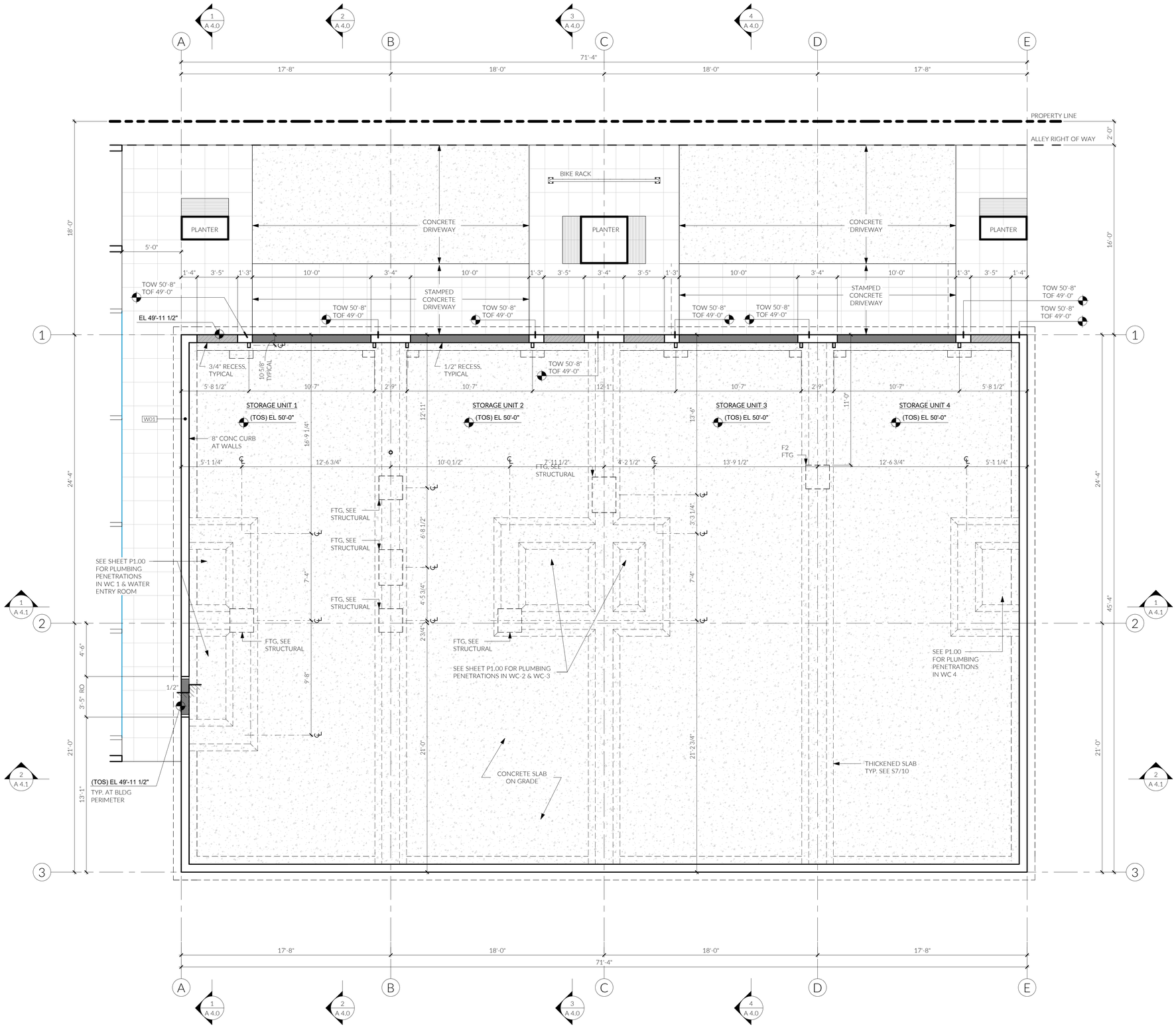

1 LEVEL 1 - FLOOR PLAN
1/4" = 1'-0"

FOUNDATION PLAN NOTES

1. REFER TO STRUCTURAL GENERAL NOTES, PLANS, AND DETAILS FOR SIZING AND SPACING OF ALL FOOTINGS, STEM WALLS, AND STRUCTURAL REINFORCING
2. ALL DIMENSIONS TO FACE OF ROUGH FRAMING OR FACE OF CONCRETE UON. ALL DIMENSIONS ON THIS PLAN SHALL BE REFERENCED WITH ARCHITECTURAL AND STRUCTURAL PLANS. PLEASE CONTACT ARCHITECT IMMEDIATELY IF THERE ARE DISCREPANCIES.
3. PLEASE REFER TO LOCAL GOVERNING AUTHORITY RECOMMENDATIONS FOR EXCAVATION, FILL, & SITE PREPERATION FOR FOUNDATIONS PRIOR TO BREAKING GROUND. ARCHITECT AND STRUCTURAL ENGINEER REQUIRED TO BE CONSULTED ON ANY DISCREPANCIES IN EXCAVATION AND SOIL INFORMATION. LOCAL GOVERNING AUTHORITY MAY BE REQUIRED TO BE PRESENT DURING EXCAVATION.
4. BOTTOM OF WALL CALLOUTS ARE ESTIMATES BASED OFF SURVEY TOPOGRAPHICAL DATA. THE CONTRACTOR AND EXCAVATOR ARE REQUIREDTO VERIFY FINAL EXCAVATION NEEDED AND FINAL FOOTING ELEVATIONS PER MEANS AND METHODS AND SOIL CONDITIONS. NOTIFY ARCTHIECT AND STRUCTURAL ENGINEER TO ANY CHANGES TO FOOTING ELEVATIONS BASED ON SOIL CONDITIONS.
5. ALL DIMENSIONS TO FACE OF FINISH U.N.O.
6. ALL INTERIOR PARTIONS TO BE FULL HEIGHT TO BOTTOM OF STRUCTURE ABOVE
7. ALL DOORS TO BE LOCATED 4" FROM ADJACENT WALL U.N.O.

EXCAVATION & GRADING NOTES

1. IT IS THE INTENT OF THE ARCHITECTURAL DRAWINGS TO COMPLY WITH ALL STANDARDS IN THE LOCAL GOVERNING AUTHORITY MUNICIPAL CODE DEVELOPMENT STANDARDS. PLEASE NOTIFY THE ARCHITECT IMMEDIATELY IF THERE IS A DISCREPANCY OR CONFLICT WITH COMPLIANCE IN THE DRAWINGS.
2. IT IS THE RESPONSIBILITY OF THE CONTRACTOR TO REVIEW, PLAN, AND IMPLETMENT EXCAVATION AND SITE WORK BASED ON SITE CONDITIONS AND GEOTECHNICAL RECOMMENDATIONS. IT IS THE CONTRACTOR'S RESPONSIBILITY TO VERIFY AND DETERMINE THE EXACT EXCAVATION NEEDED. NOTIFY ARCHITECT IMMEDIATELY IF DEVIATIONS IN THE DRAWINGS ARE REQUIRED OR HAVE OCCURED. DEVIATIONS MAY REQUIRE ADDITIONAL REVIEW AND PERMITTING.
3. THE GEOTECHNICAL, STRUCTURAL, AND CIVIL ENGINEERS SHALL REVIEW AND APPROVE ALL PLANS, METHODS, AND DEVELOPMENT IN THIS PROJECT PRIOR TO ANY EXCAVATION, GRADING, AND SITE WORK BEGINS.
4. ALL TEMPORARY GRADE CUTS SHALL BE 1V : 1H PER LOCAL GOVERNING AUTHORITY RECOMMENDAITONS. STEEPER EXCAVATION CUTS MAY BE USED WITH PRIOR REVIEW & APPROVAL FROM LOCAL GOVERNING AUTHORITY.
5. EXCAVATION DIAGRAM DEPICTS THE EXCAVATION NEEDED BASED ON THE ARCHITECTURE DRAWINGS AND SURVEY. CONTRACTOR AND SUB CONTRACTORS TO VERIFY AND DETERMINE EXACT EXCAVATION NEEDED FOR THE FOUNDATION BASED ON FIELD CONDIITONS. NOTIFY THE ARCHITECT IMMEDIATELY IF DEVIATIONS IN THE DRAWINGS ARE REQUIRED OR HAVE OCCURED.
6. NO TEMPORARY GRADE CUTS SHALL BE ALLOWED TO CROSS ANY PROPERTY LINE.
7. SLOPES FOR PERMANENT EXCAVATIONS OR FILLS WITHOUT RETAINING WALLS SHALL NOT BE STEEPER THAN TWO HORIZONTAL TO ONE VERTICAL UNLESS EXPLICIT APPROVAL FROM LOCAL GOVERNING AUTHORITY.
8. DURING DEVELOPMENT, IMPROVEMENT, USE OR CONSTRUCTION ALL NATURAL CONTOURS SHALL BE MAINTAINED TO THE EXTENT THAT NATURAL DRAINAGE FLOW FROM OR ONTO ADJACENT PUBLIC OR PRIVATE PROPERTY SHALL NOT BE DISRUPTED, BLOCKED, INCREASED, REDIRECTED, OR OTHERWISE MADE DETRIMENTAL TO THE USE OR MAINTENANCE OF ADJACENT PROPERTIES.

FOUNDATION LEGEND

- 1/2" RECESS AT CONCRETE DOOR SILL
- 3/4" RECESS AT CONCRETE DOOR SILL

FIRST LAMP | ARCHITECTS BUILDERS
206.414.9884
4915 RAINIER AVE S, STE 202
SEATTLE, WA 98118
INFO@FIRSTLAMP.NET

9547 REGISTERED ARCHITECT
TAYLOR BRIAN CALLAWAY
STATE OF WASHINGTON

5TH ST SE CUP
111 5TH ST SE
PUYALLUP, WA 98372

MUNICIPAL APPROVAL STAMPS

2203

PERMIT SUBMITTAL | 01.24.2025

REVISIONS

NO.	DESCRIPTION	DATE

DRAWN BY: MD

PROJECT NORTH

FOUNDATION PLAN & EXCAVATION NOTES

A 2.0

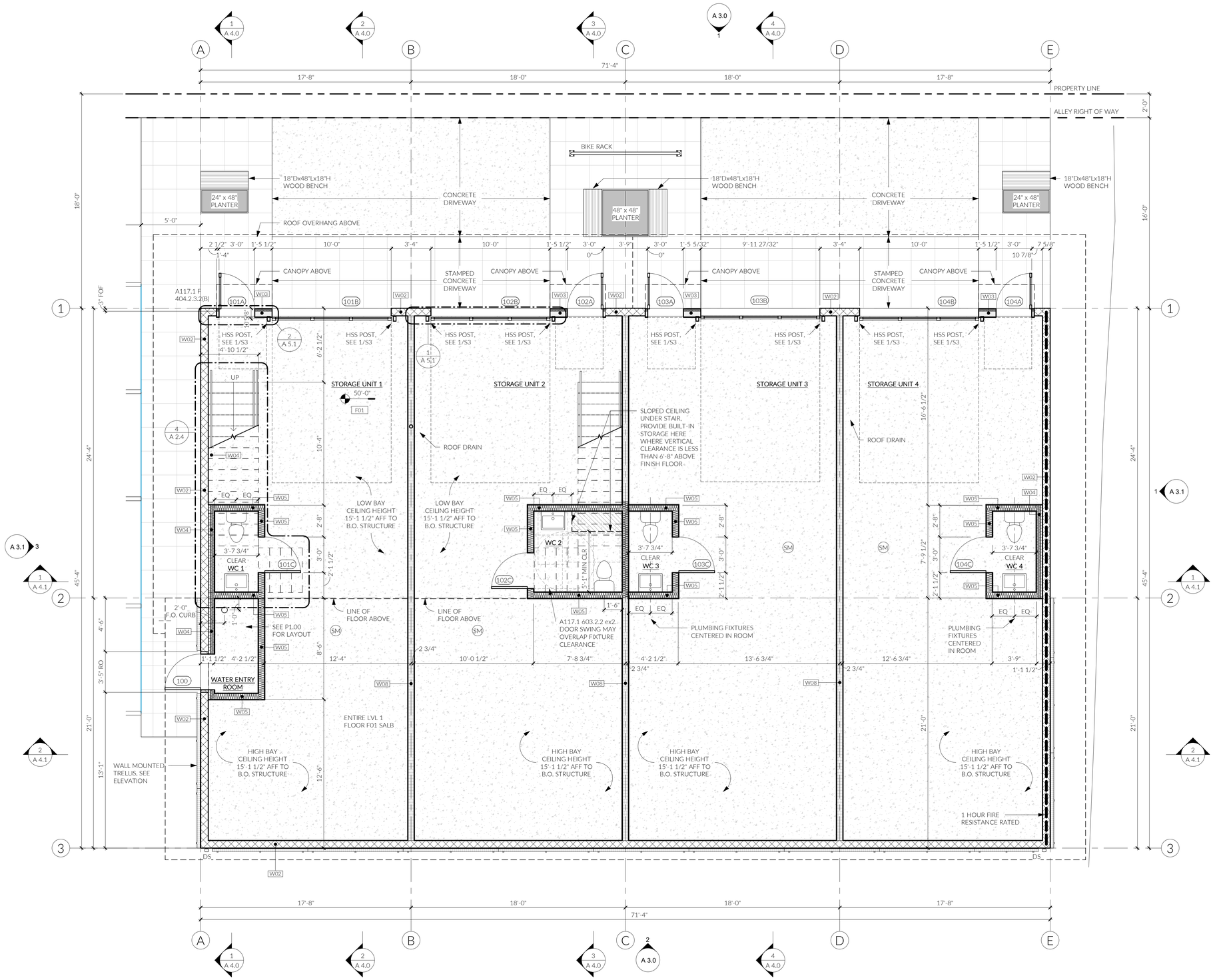

1 LEVEL 1 - FLOOR PLAN
1/4" = 1'-0"

FLOOR PLAN NOTES

1. SEE SHEET G 0.0 FOR ADDITIONAL GENERAL NOTES.
2. ALL DIMENSIONS TO FACE OF STRUCTURE U.N.O.
3. SEE ARCHITECTURAL SLAB PLANS FOR DRAIN SLOPES AND LOCATIONS.
4. ALL DOORS TO BE LOCATED 4" FROM ADJACENT WALL U.N.O.
5. CONTRACTOR MUST ACCOUNT FOR CONSTRUCTION TOLERANCES TO ENSURE PROPER MINIMUM AND MAXIMUM CLEARANCES REQUIRED BY ICC/ANSI A117.1-2017. REFER TO SHEETS G 3.0 FOR ADDITIONAL REQUIREMENTS.
6. ALL SPOT ELEVATIONS IN PARENTHESIS ARE REFERENCED TO THE CIVIL DRAWINGS. SEE CIVIL.

SHEET NOTES

1. NEW STOREFRONT SECURE DOOR WITH MULTI-POINT LOCKING MECHANCISM TO PREVENT FORCED ENTRY
2. SOUND SEPARATION STC RATED PARTITIONS
3. 1-1/2" ROUND METAL HANDRAIL, BOTH SIDE, WITH 12" LEVEL EXTENSIONS AND WALL RETURNS AT TOP AND BOTTOM OF RAMP. PROIVDE 1-1/2" GAP FROM HANDRAIL TO WALL FINISH FACE. MOUNT HANDRAIL AT 36" ABOVE WALKING SURFACE, FINISH TBD, PER ANSI 117.1 SECTION 505
4. BUILDING EXTERIOR LIGHTING SHALL BE SHIELDED AND DIRECTED AWAY FROM ADJACENT USES.
5. ALL EXPOSED STEEL TO BE PRIMED, TYPICAL
6. PROVIDE GWB AT ALL CORE AND SHELL AND WHERE FIRE RATING IS REQUIRED.

GRAPHIC WALL LEGEND

P EXIT SIGN; REFER TO FLOOR PLAN
(P) CEILING - PENDANT
(R) CEILING - RECESSED
(S) CEILING - SURFACE
(E) WALL - END
(W) WALL

FINAL APPROVED LOCATIONS TO BE DETERMINED BY THE FIELD INSPECTOR

FIRE PROTECTION NOTES

1. PROVIDE MAX. OCCUPANT LOAD SIGNAGE AS REQ'D PER 2018 SFC, SECTION 1004.9.
2. NO STORAGE OR USE OF FLAMMABLE OR COMBUSTIBLE LIQUIDS, TORCH CUTTING OR WELDING OPERATIONS, OPEN FLAME WORK, GRINDING PRODUCING SPARKS, ROOFING OPERATIONS, OR USE OF FLAMMABLE GAS FOR TEMPORARY HEATING OR DRYING SHALL BE CONDUCTED ON ANY CONSTRUCTION SITE WITHOUT FIRST HAVING OBTAINED SPECIFIC PERMIT FROM THE LOCAL JURISDICTION FIRE DEPARTMENT FOR THESE HAZARDOUS ACTIVITIES, INCLUDING DEMOLITION.
3. DURING CONSTRUCTION, CONTRACTOR TO MAINTAIN EGRESS FIRE PROTECTION SYSTEMS AND EMERGENCY ACCESS FOR THIS SPACE AND ADJACENT AREAS, AS REQ'D PER 2021 IFC, CHAPTER 33.

FIRE SEPARATION - SBC 508.4

- 3 HOUR SEPARATION
- 2 HOUR SEPARATION
- 1 HOUR SEPARATION
- NR SEPARATION

FIRST LAMP | ARCHITECTS BUILDERS

206.414.9884
4915 RAINIER AVE S, STE 202
SEATTLE, WA 98118
INFO@FIRSTLAMP.NET

9547 REGISTERED ARCHITECT
TAYLOR BRIAN CALLAWAY
STATE OF WASHINGTON

5TH ST SE CUP
111 5TH ST SE
PUYALLUP, WA 98372

MUNICIPAL APPROVAL STAMPS

2203

PERMIT SUBMITTAL | 01.24.2025

REVISIONS

NO.	DESCRIPTION	DATE
1	DRT CORR. 1	9/27/2023
2	DRT FINAL	11/16/2023

DRAWN BY: MD

LEVEL 1 - FLOOR PLAN

PROJECT NORTH

A 2.1

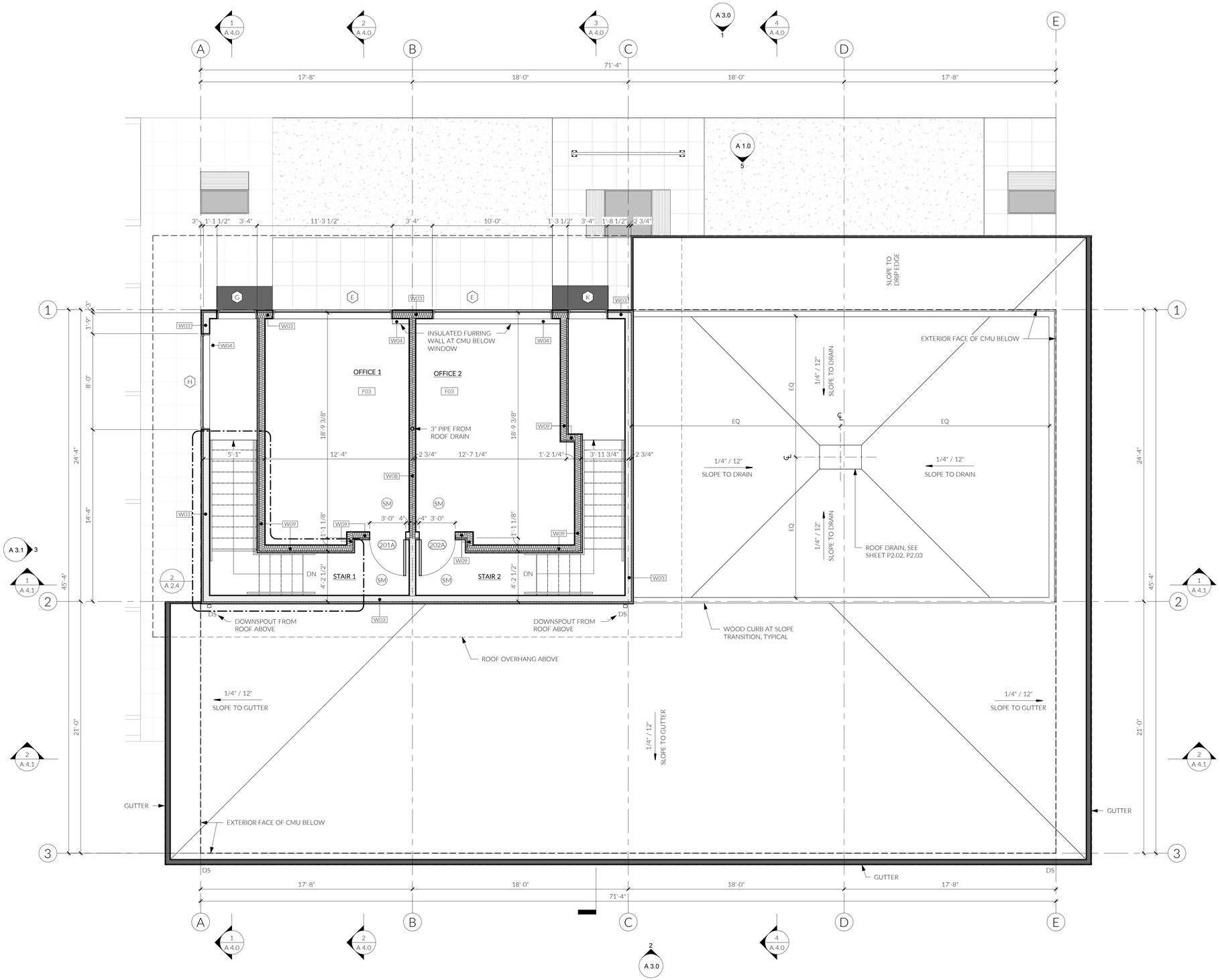

1 LEVEL 2 - FLOOR PLAN
1/4" = 1'-0"

FLOOR PLAN NOTES

1. SEE SHEET G 0.0 FOR ADDITIONAL GENERAL NOTES.
2. ALL DIMENSIONS TO FACE OF STRUCTURE U.N.O.
3. SEE ARCHITECTURAL SLAB PLANS FOR DRAIN SLOPES AND LOCATIONS.
4. ALL DOORS TO BE LOCATED 4" FROM ADJACENT WALL U.N.O.
5. CONTRACTOR MUST ACCOUNT FOR CONSTRUCTION TOLERANCES TO ENSURE PROPER MINIMUM AND MAXIMUM CLEARANCES REQUIRED BY ICC/ANSI A117.1-2017. REFER TO SHEETS G 3.0 FOR ADDITIONAL REQUIREMENTS.
6. ALL SPOT ELEVATIONS IN PARENTHESIS ARE REFERENCED TO THE CIVIL DRAWINGS. SEE CIVIL.

SHEET NOTES

1. NEW STOREFRONT SECURE DOOR WITH MULTI-POINT LOCKING MECHANCISM TO PREVENT FORCED ENTRY
2. SOUND SEPARATION STC RATED PARTITIONS
3. 1-1/2" ROUND METAL HANDRAIL, BOTH SIDE, WITH 12" LEVEL EXTENSIONS AND WALL RETURNS AT TOP AND BOTTOM OF RAMP. PROIVDE 1-1/2" GAP FROM HANDRAIL TO WALL FINISH FACE. MOUNT HANDRAIL AT 36" ABOVE WALKING SURFACE, FINISH TBD, PER ANSI 117.1 SECTION 505
4. BUILDING EXTERIOR LIGHTING SHALL BE SHIELDED AND DIRECTED AWAY FROM ADJACENT USES.
5. ALL EXPOSED STEEL TO BE PRIMED, TYPICAL
6. PROVIDE GWB AT ALL CORE AND SHELL AND WHERE FIRE RATING IS REQUIRED.

GRAPHIC WALL LEGEND

P EXIT SIGN: REFER TO FLOOR PLAN
(P) CEILING - PENDANT
(R) CEILING - RECESSED
(S) CEILING - SURFACE
(E) WALL - END
(W) WALL

FINAL APPROVED LOCATIONS TO BE DETERMINED BY THE FIELD INSPECTOR

FIRE PROTECTION NOTES

1. PROVIDE MAX. OCCUPANT LOAD SIGNAGE AS REQ'D PER 2018 SFC, SECTION 1004.9.
2. NO STORAGE OR USE OF FLAMMABLE OR COMBUSTIBLE LIQUIDS, TORCH CUTTING OR WELDING OPERATIONS, OPEN FLAME WORK, GRINDING PRODUCING SPARKS, ROOFING OPERATIONS, OR USE OF FLAMMABLE GAS FOR TEMPORARY HEATING OR DRYING SHALL BE CONDUCTED ON ANY CONSTRUCTION SITE WITHOUT FIRST HAVING OBTAINED SPECIFIC PERMIT FROM THE LOCAL JURISDICTION FIRE DEPARTMENT FOR THESE HAZARDOUS ACTIVITIES, INCLUDING DEMOLITION.
3. DURING CONSTRUCTION, CONTRACTOR TO MAINTAIN EGRESS FIRE PROTECTION SYSTEMS AND EMERGENCY ACCESS FOR THIS SPACE AND ADJACENT AREAS, AS REQ'D PER 2021 IFC, CHAPTER 33.

FIRE SEPARATION - SBC 508.4

- 3 HOUR SEPARATION
- 2 HOUR SEPARATION
- 1 HOUR SEPARATION
- NR SEPARATION

FIRST LAMP ARCHITECTS BUILDERS
206.414.9884
4915 RAINIER AVE S, STE 202
SEATTLE, WA 98118
INFO@FIRSTLAMP.NET

9547 REGISTERED ARCHITECT
TAYLOR BRIAN CALLAWAY
STATE OF WASHINGTON

5TH ST SE CUP
111 5TH ST SE
PUYALLUP, WA 98372

MUNICIPAL APPROVAL STAMPS

2203

PERMIT SUBMITTAL | 01.24.2025

REVISIONS

NO.	DESCRIPTION	DATE
1	DRT CORR. 1	9/27/2023
2	DRT FINAL	11/16/2023

DRAWN BY: MD

LEVEL 2 - FLOOR PLAN

PROJECT NORTH

A 2.2

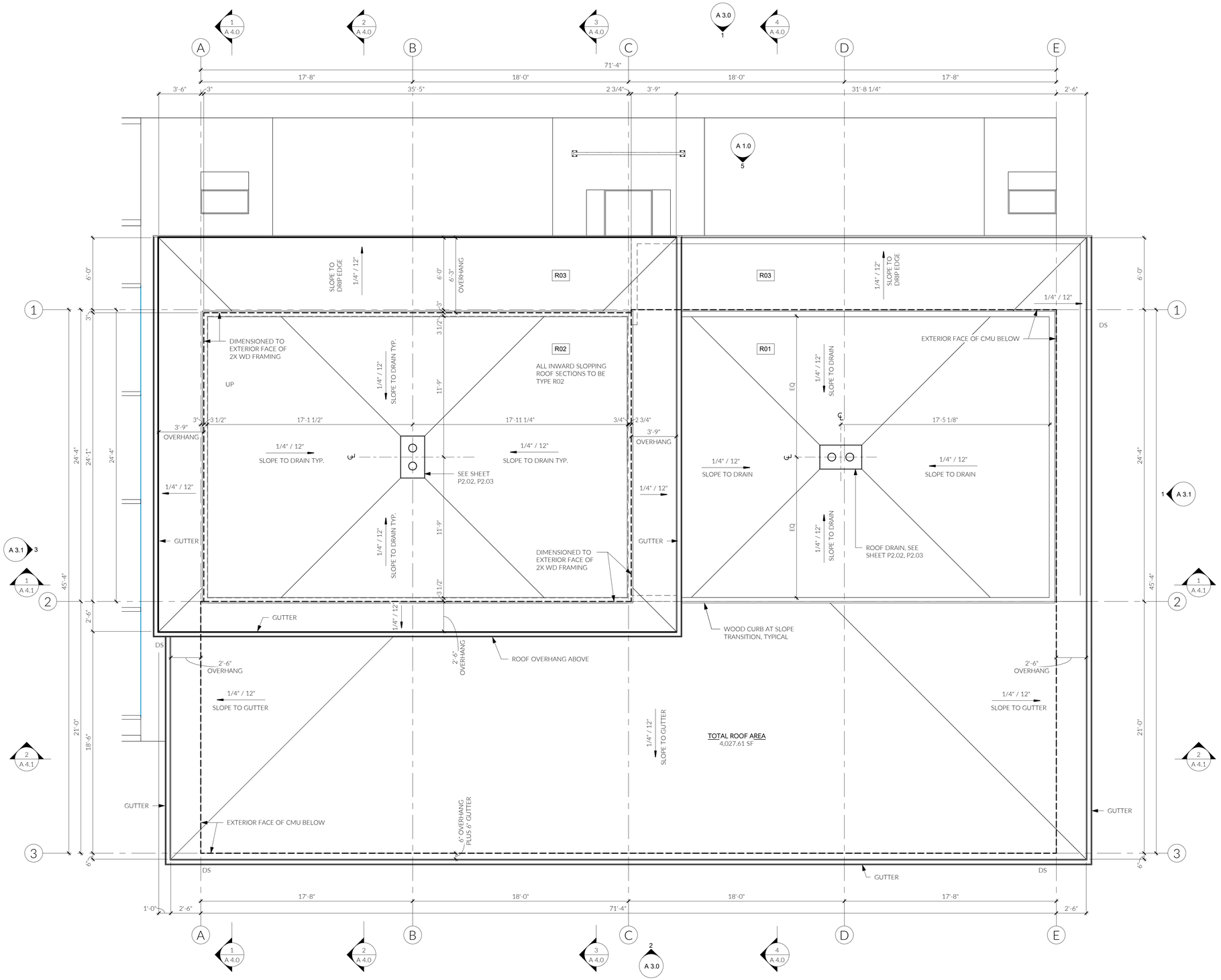

1 A - ROOF
1/4" = 1'-0"

GENERAL NOTES

1. ALL DIMENSIONS TO FACE OF FINISH U.N.O.
2. ALL INTERIOR PARTIONS TO BE FULL HEIGHT TO BOTTOM OF STRUCTURE ABOVE
3. ALL DOORS TO BE LOCATED 4" FROM ADJACENT WALL U.N.O.

ROOF PLAN NOTES

1. DO NOT SCALE DRAWINGS. CONTACT ARCHITECT IMMEDIATELY BEFORE PROCEEDING WITH ANY WORK IF AMBIGUITIES OR DISCREPANCIES EXIST IN DRAWINGS.
2. ALL DIMENSIONS REFER TO FACE OF ROUGH FRAMING MEMBER UON.
3. VALLEY FLASHING SHALL EXTEND 24" BEYOND EITHER SIDE OF VALLEY LINES UON.
4. SIDEWALL FLASHING SHALL EXTEND 24" ABOVE ALL ROOF-TO-WALL TERMINATIONS UON.
5. FLASH, COUNTER FLASH, CAULK AND SEAL ALL PLUMBING AND MECHANICAL PENETRATIONS THROUGH ROOF MEMBRANES. WATERPROOFING SHALL EXTEND FROM PENETRATION FLANGE 24" IN ALL DIRECTIONS BEYOND PENETRATION EDGE.
6. ALL MATERIALS SHALL BE APPLIED IN ACCORDANCE WITH THE MANUFACTURERS PRINTED INSTALLATION INSTRUCTIONS.
7. MAINTENANCE ROOF ACCESS FROM GROUND WITH LADDER.

UNVENTED ROOF ASSEMBLY

PER WASHINGTON STATE BUILDING CODE 1203.3

1. THE UNVENTED ATTIC SPACE IS COMPLETELY WITHIN THE BUILDING THERMAL ENVELOPE

2. NO INTERIOR VAPOR RETARDERS ARE INSTALLED ON THE CEILING SIDE OF THE UNVENTED ENCLOSED ROOF FRAMING ASSEMBLY.

3. IN CLIMATE ZONE 5B, ANY AIR-IMPERMEABLE INSULATION SHALL BE A CLASS II VAPOR RETARDER, OR SHALL HAVE A CLASS II VAPOR RETARDER COATING OR COVERING IN DIRECT CONTACT WITH THE UNDERSIDE OF THE INSULATION.

4. SUFFICIENT RIGID BOARD OR SHEET INSULATION SHALL BE INSTALLED DIRECTLY ABOVE THE STRUCTURAL ROOF SHEATHING TO MAINTAIN A MONTHLY AVERAGE TEMPERATURE OF THE UNDERSIDE OF THE STRUCTURAL ROOF SHEATHING ABOVE 45 DEGREES FAHRENHEIT. FOR CALCULATION PURPOSES, AN INTERIOR AIR TEMPERATURE OF 68 DEGREES IS ASSUMED AND THE EXTERIOR AIR TEMPERATURE IS ASSUMED TO BE THE MONTHLY AVERAGE OUTSIDE AIR TEMPERATURE OF THE THREE COLDEST MONTHS.

PER BUILDING SCIENCE CORPORATION'S ARTICLE 'BSI-100: HYBRID ASSEMBLIES' :

A. IN CLIMATE 4C, A RIGID INSULATION RATIO OF 20% TO THE TOTAL R-VALUE MUST BE INSTALLED ABOVE THE STRUCTURAL ROOF SHEATHING TO MAINTAIN AN AVERAGE TEMPERATURE GREATER THAN 45 DEGREES ON THE UNDERSIDE OF THE STRUCTURAL SHEATHING. (TABLE 1 IN BSI-100). THE TOTAL R-VALUE OF ASSEMBLY R02 IS R-58 (R-38 BATT INSULATION & R-20 RIGID). 20% OF R-58 IS R-11.6. R-20 RIGID INSULATION ON THE EXTERIOR OF THE STRUCTURAL SHEATHING MEETS THE REQUIREMENTS OF 1203.3.5.1.4.

B. WHERE PREFORMED INSULATION BOARD IS USED AS THE AIR-PERMEABLE INSULATION LAYER, IT SHALL BE SEALED AT THE PERIMETER OF EACH INDIVIDUAL SHEET INTERIOR SURFACE TO FORM A CONTINUOUS LAYER.

FIRST LAMP | ARCHITECTS BUILDERS

206.414.9884
4915 RAINIER AVE S, STE 202
SEATTLE, WA 98118
INFO@FIRSTLAMP.NET

9547 REGISTERED ARCHITECT
TAYLOR BRIAN CALLAWAY
STATE OF WASHINGTON

5TH ST SE CUP
111 5TH ST SE
PUYALLUP, WA 98372

MUNICIPAL APPROVAL STAMPS

2203

PERMIT SUBMITTAL | 01.24.2025

REVISIONS

NO.	DESCRIPTION	DATE

DRAWN BY: MD

ROOF PLAN

A 2.3

PROJECT NORTH

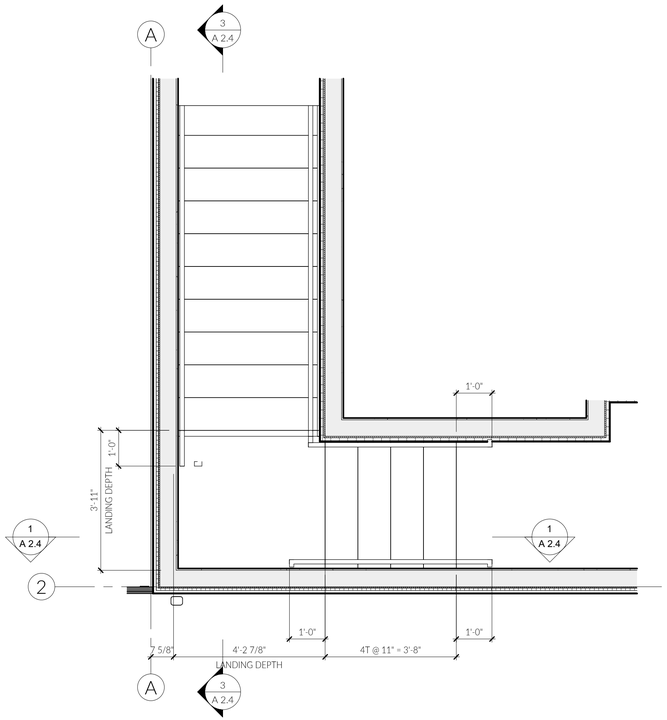

2 ENLARGED PLAN - STAIR 1 - LEVEL 2 * NOTE: STAIR 2 OPPOSITE *
1/2" = 1'-0"

PRESCRIPTIVE RESIDENTIAL WOOD DECK CONSTRUCTION GUIDE

STAIR REQUIREMENTS

STAIRS, STAIR STRINGERS, AND STAIR GUARDS SHALL MEET THE REQUIREMENTS SHOWN IN FIGURE 02. ALL STRINGERS SHALL BE A MINIMUM OF 2X12. STAIR STRINGERS SHALL NOT SPAN MORE THAN THE DIMENSIONS SHOWN IN ***FIGURE XX***. IF THE STRINGER SPAN EXCEEDS THESE DIMENSIONS, THEN A 4X4 POST SHALL BE NOTCHED AND BOLTED TO THE STRINGER WITH (2) 1/2" DIA. THROUGH-BOLTS WITH WASHERS. THE POST SHALL BE CENTERED ON A 12" DIA OR 10" SQUARE, 6" THICK FOOTING. IF THE TOTAL VERTICAL HEIGHT OF THE STAIRWAY EXCEEDS 12'-0", THEN AN INTERMEDIATE LANDING SHALL BE REQ'D. ALL INTERMEDIATE STAIR LANDINGS MUST BE DESIGNED AND CONSTRUCTED AS A NON-LEDGER DECK USING THE DETAILS IN THIS DOCUMNET. STAIRS SHALL BE A MINIMUM OF 36" IN WIDTH. IF ONLY CUT STRINGERS ARE USED, A MINIMUM OF THREE ARE REQ'D. FOR STAIRS GREATER THAN 36" IN WIDTH, A COMBINATION OF CUT AND SOLID STRINGERSCAN BE USED, BUT SHALL BE PLACED AT A MAXIMUM SPACING OF 18" O.C. THE WIDTH OF EACH LANDING SHALL NOT BE LESS THAN THE WIDTH OF THE STAIRWAY SERVED. EVERY RECTANGULAR LANDING SHALL HAVE A MINIM DIMENSION OF 36" MEASURED IN THE DIRECTION OF TRAVEL AND NO LESS THAN THE WIDTH OF THE STAIRWAY SERVED.

FIGURE 01 - TREAD AND RISER DETAIL

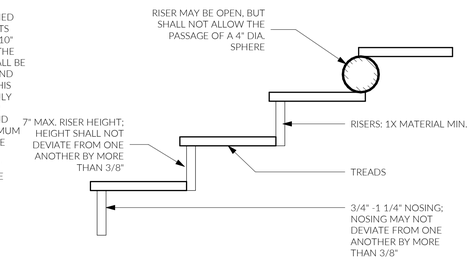

GUARDRAIL REQUIREMENTS

ALL DECKS GREATER THAN 30" ABOVE GRADE ARE REQUIRED TO HAVE A GUARDRAIL - ONE EXAMPLE IS SHOWN IN FIGURE 03. OTHER METHODS AND MATERIALS MAY BE USED FOR GUARDRAIL CONSTRUCTION WHEN APPROVED BY SDCI.

FIGURE 02 - GUARDRAIL DETAIL

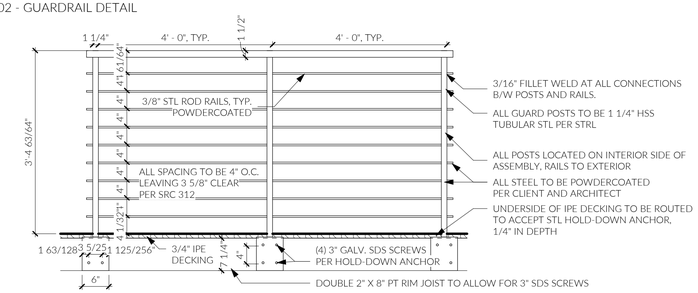

NOTE: SHOWING INTERIOR OF RIM JOIST FOR CLARITY; POST CONNECTION (HOLD-DOWN ANCHOR) TO BE CONCEALED FROM EXTERIOR (BY FASCIA)

5 STAIR / GUARDRAIL STANDARDS
3/8" = 1'-0"

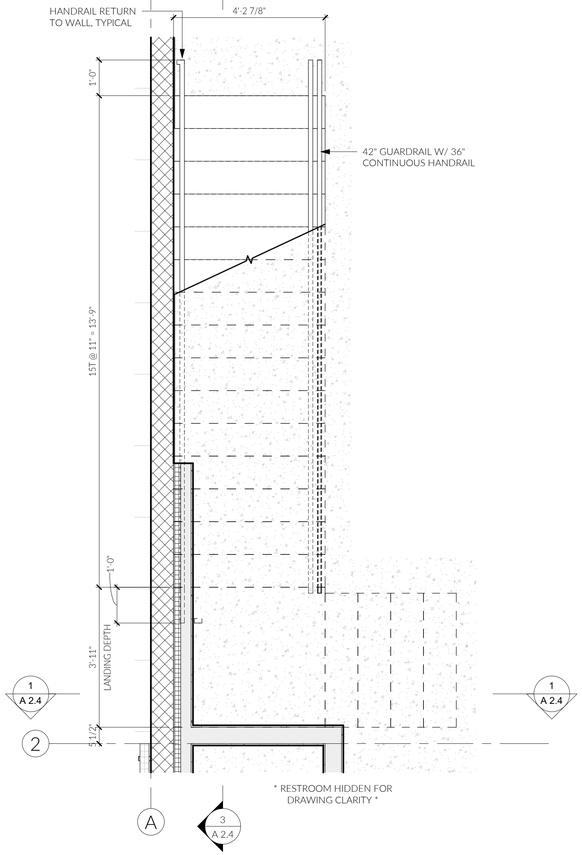

4 ENLARGED PLAN - STAIR 1 - LEVEL 1 * NOTE: STAIR 2 OPPOSITE *
1/2" = 1'-0"

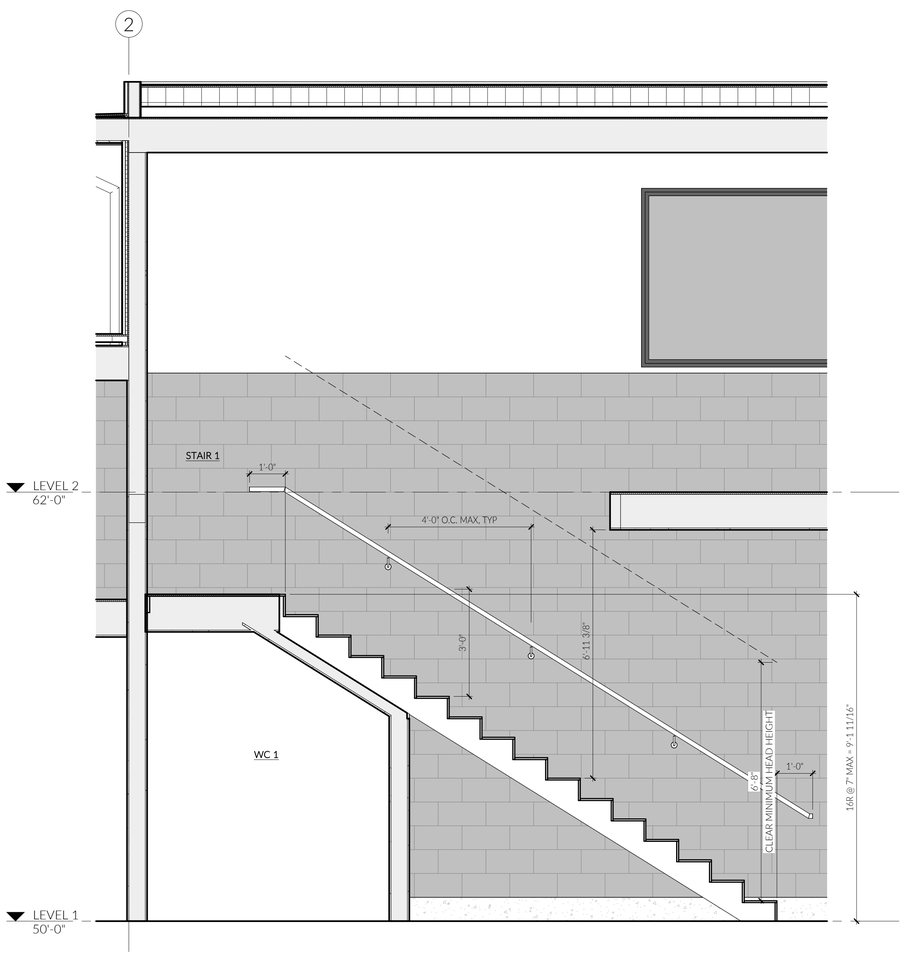

3 SECTION THROUGH STAIR 1
1/2" = 1'-0"

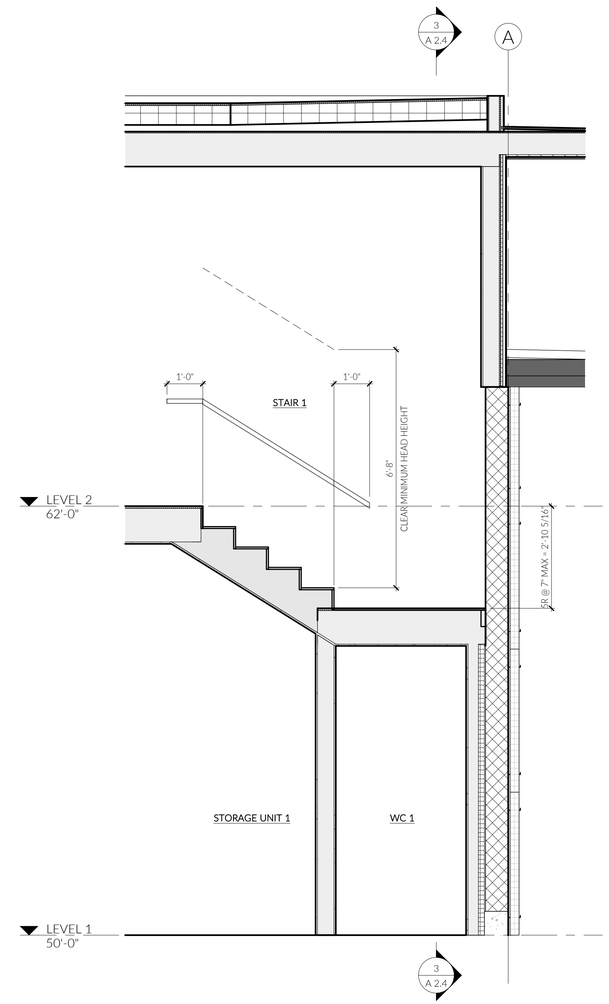

1 SECTION THROUGH STAIR 1
1/2" = 1'-0"

FIRST LAMP ARCHITECTS BUILDERS
206.414.9884
4915 RAINIER AVE S, STE 202
SEATTLE, WA 98118
INFO@FIRSTLAMP.NET

9547 REGISTERED ARCHITECT
TAYLOR BRIAN CALLAWAY
STATE OF WASHINGTON

5TH ST SE CUP
111 5TH ST SE
PUYALLUP, WA 98372

MUNICIPAL APPROVAL STAMPS

2203

PERMIT SUBMITTAL | 01.24.2025

REVISIONS

NO.	DESCRIPTION	DATE

DRAWN BY: MD

ENLARGED STAIR PLANS AND SECTIONS

A 2.4

1 NORTH
1/4" = 1'-0"

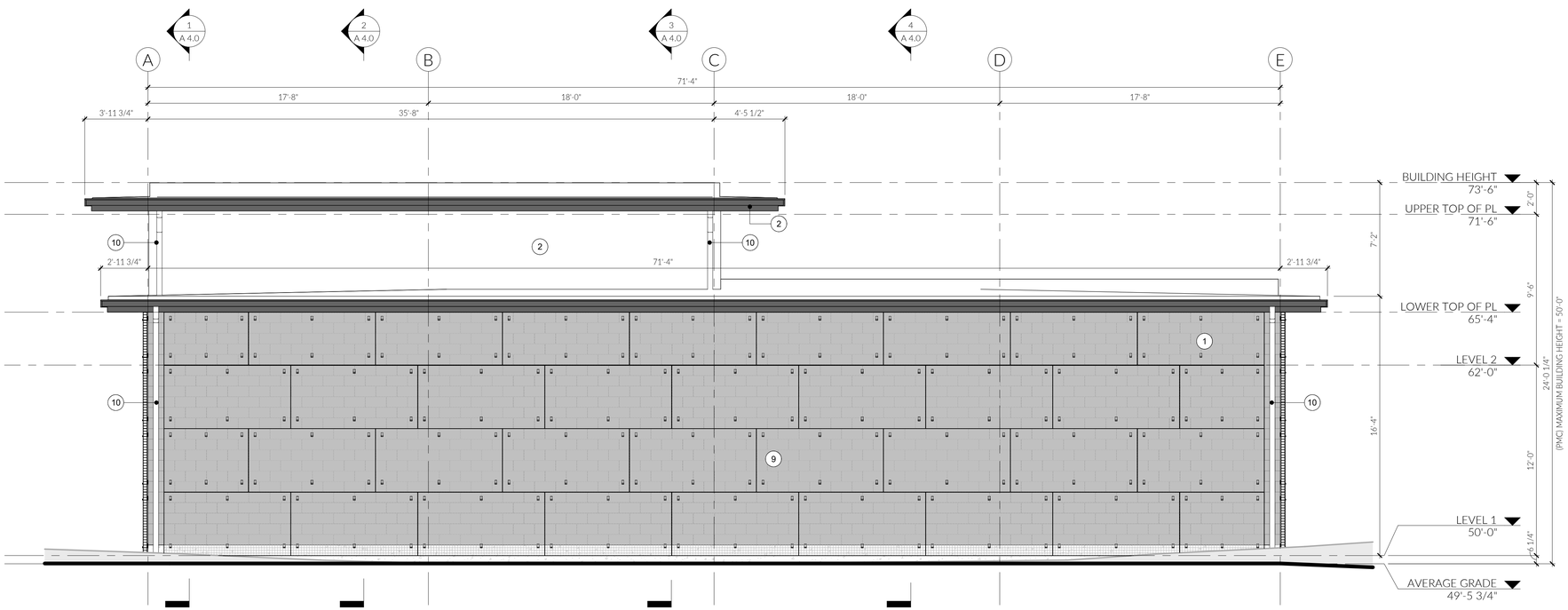

2 SOUTH
1/4" = 1'-0"

GENERAL NOTES

1. ALL DIMENSIONS TO FACE OF FINISH U.O.N.
2. FINISHED GRADE SHALL BE GRADED SO AS TO PROVIDE A 1/2" PER FOOT SLOPE AWAY FROM ALL EXTERIOR WALLS FOR A MINIMUM OF 10' AROUND THE ENTIRE PERIMETER OF THE BUILDING.
3. EXTERIOR LIGHTING SHALL BE SHIELDED AND DIRECTED AWAY FROM ADJACENT PROPERTIES.
4. INTERIOR LIGHTING IN PARKING GARAGES SHALL BE SHIELDED TO MINIMIZE NIGHTTIME GLARE ON ADJACENT PROPERTIES.
5. "SG" MARK INDICATES SAFETY GLASS GLAZING

MATERIAL LEGEND

1. SPLIT FACE CEMENT BLOCK, COLOR MEDIUM GRAY
2. PANEL, METAL TRIM & FLASHING, COLOR MATTE BLACK
3. STEEL AWNING, PAINTED: COLOR MATTE BLACK
4. WALL SCONCE, MATTE BLACK
5. PLANTER WITH WOOD BENCH, SEE A1.0
6. BIKE RACK, SEE A1.0
7. GARAGE DOOR, CLEAR GLASS WITH FRAME COLOR MATTE BLACK
8. ENTRY DOORS, CLEAR GLASS WITH FRAME COLOR MATTE BLACK
9. WIRE MESH PLANT TRELLIS
10. GUTTER AND DOWNSPOUTS, COLOR MATTE BLACK
11. WINDOWS CLEAR GLASS WITH FRAME COLOR MATTE BLACK

FIRST LAMP | ARCHITECTS BUILDERS

206.414.9884
4915 RAINIER AVE S, STE 202
SEATTLE, WA 98118
INFO@FIRSTLAMP.NET

9547 REGISTERED ARCHITECT
TAYLOR BRIAN CALLAWAY
STATE OF WASHINGTON

5TH ST SE CUP
111 5TH ST SE
PUYALLUP, WA 98372

MUNICIPAL APPROVAL STAMPS

2203

PERMIT SUBMITTAL | 01.24.2025

REVISIONS

NO.	DESCRIPTION	DATE

DRAWN BY: MD

ELEVATIONS

A 3.0

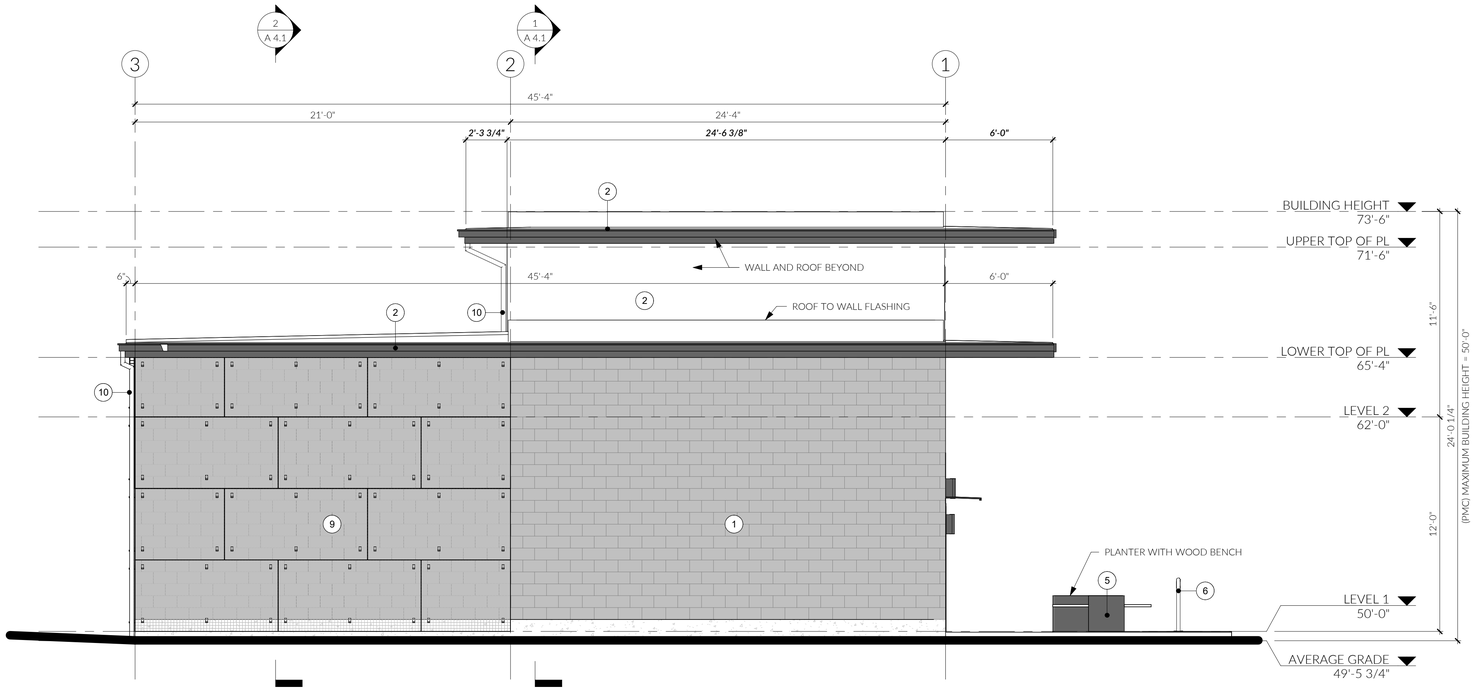

1 EAST
1/4" = 1'-0"

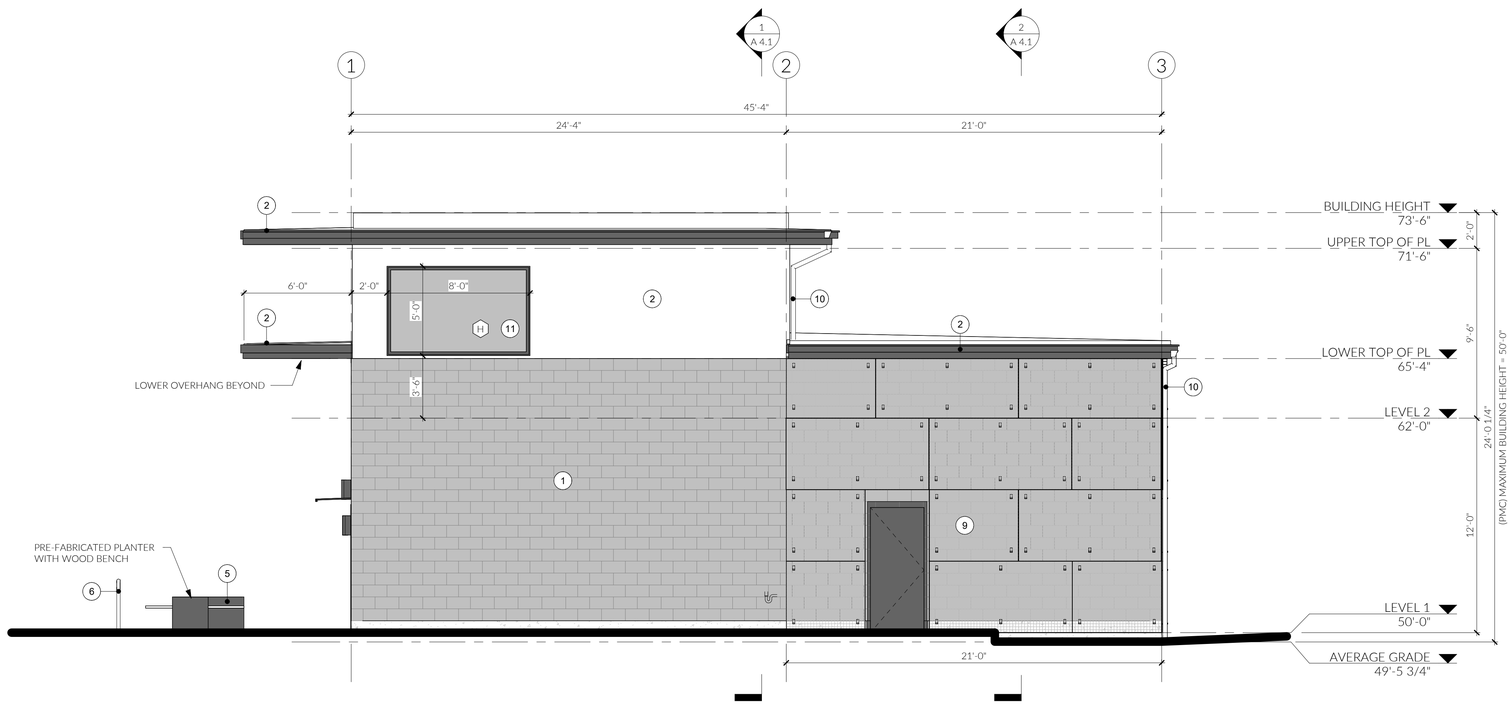

3 WEST
1/4" = 1'-0"

GENERAL NOTES

1. ALL DIMENSIONS TO FACE OF FINISH U.N.O.
2. FINISHED GRADE SHALL BE GRADED SO AS TO PROVIDE A 1/2" PER FOOT SLOPE AWAY FROM ALL EXTERIOR WALLS FOR A MINIMUM OF 10' AROUND THE ENTIRE PERMETER OF THE BUILDING.
3. EXTERIOR LIGHTING SHALL BE SHILEDED AND DIRECTED AWAY FROM ADJACENT PROPERTIES.
4. INTERIOR LIGHTING IN PARKING GARAGES SHALL BE SHILEDED TO MINIMIZE NIGGHTIME GLARE ON ADJACENT PROPERTIES.

MATERIAL LEGEND

1. SPLIT FACE CEMENT BLOCK, COLOR MEDIUM GRAY
2. PANEL, METAL TRIM & FLASHING, COLOR MATTE BLACK
3. STEEL AWNING, PAINTED: COLOR MATTE BLACK
4. WALL SCONCE, MATTE BLACK
5. PLANTER WITH WOOD BENCH, SEE A1.0
6. BIKE RACK, SEE A1.0
7. GARAGE DOOR, CLEAR GLASS WITH FRAME COLOR MATTE BLACK
8. ENTRY DOORS, CLEAR GLASS WITH FRAME COLOR MATTE BLACK
9. WIRE MESH PLANT TRELLIS
10. GUTTER AND DOWNSPOUTS, COLOR MATTE BLACK
11. WINDOWS CLEAR GLASS WITH FRAME COLOR MATTE BLACK

FIRST LAMP ARCHITECTS BUILDERS

206.414.9884
4915 RAINIER AVE S, STE 202
SEATTLE, WA 98118
INFO@FIRSTLAMP.NET

9547 REGISTERED ARCHITECT
TAYLOR BRIAN CALLAWAY
STATE OF WASHINGTON

5TH ST SE CUP
111 5TH ST SE
PUYALLUP, WA 98372

MUNICIPAL APPROVAL STAMPS

2203

PERMIT SUBMITTAL | 01.24.2025

REVISIONS

NO.	DESCRIPTION	DATE

DRAWN BY: MD

ELEVATIONS

A 3.1

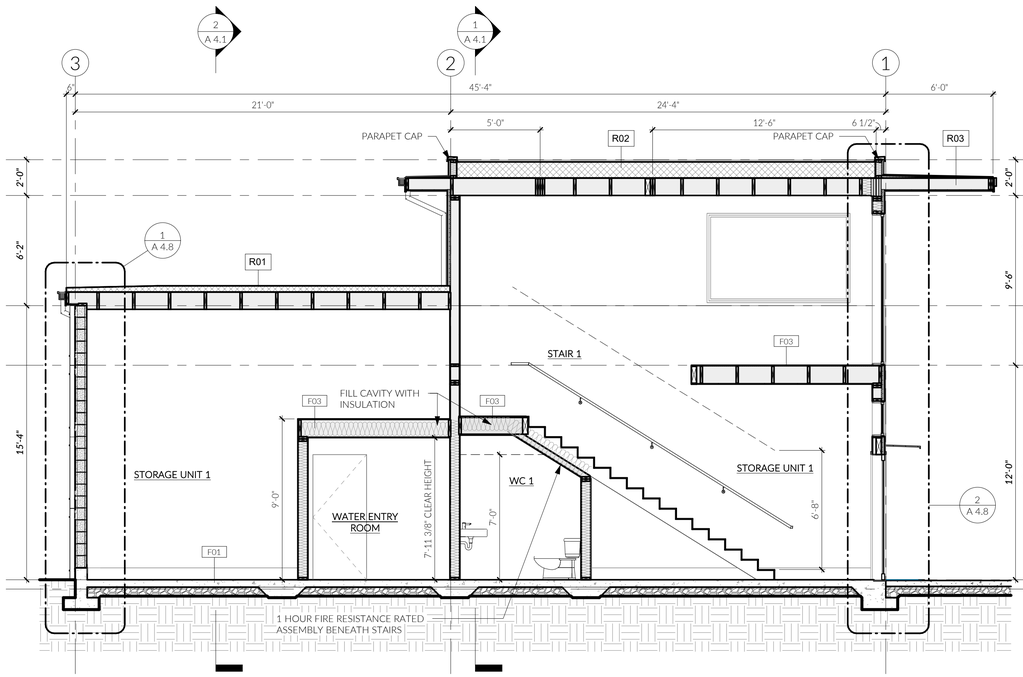

1 BUILDING SECTION - GLA.1
1/4" = 1'-0"

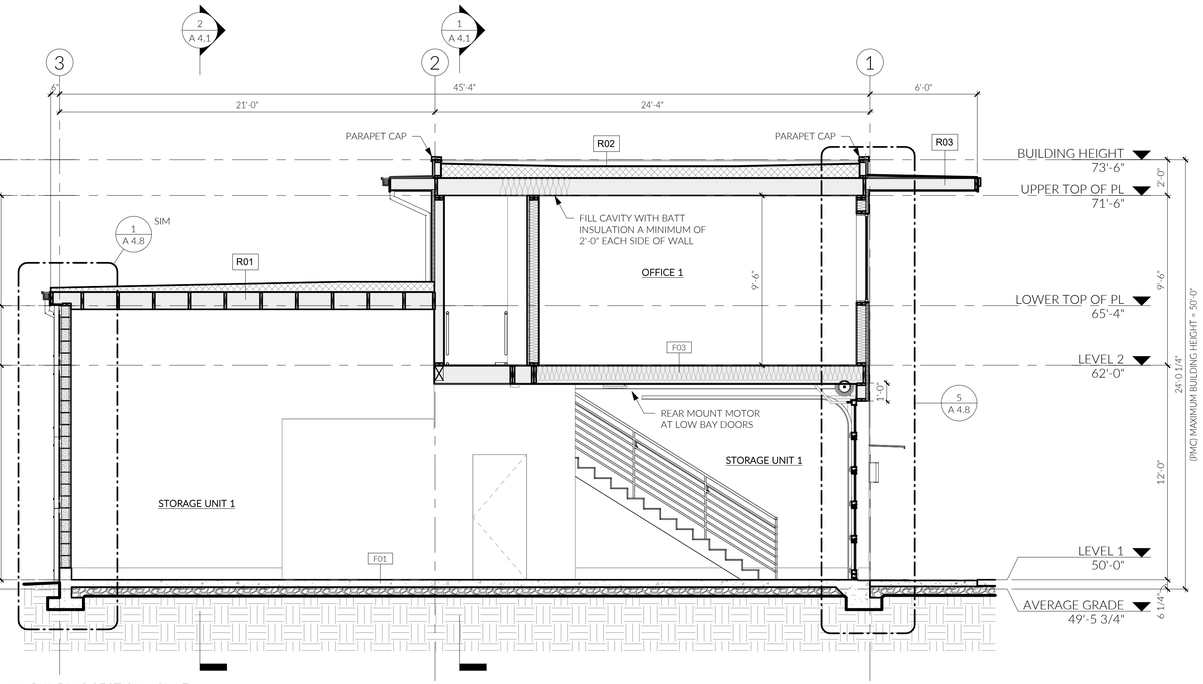

2 BUILDING SECTION - GLA.7
1/4" = 1'-0"

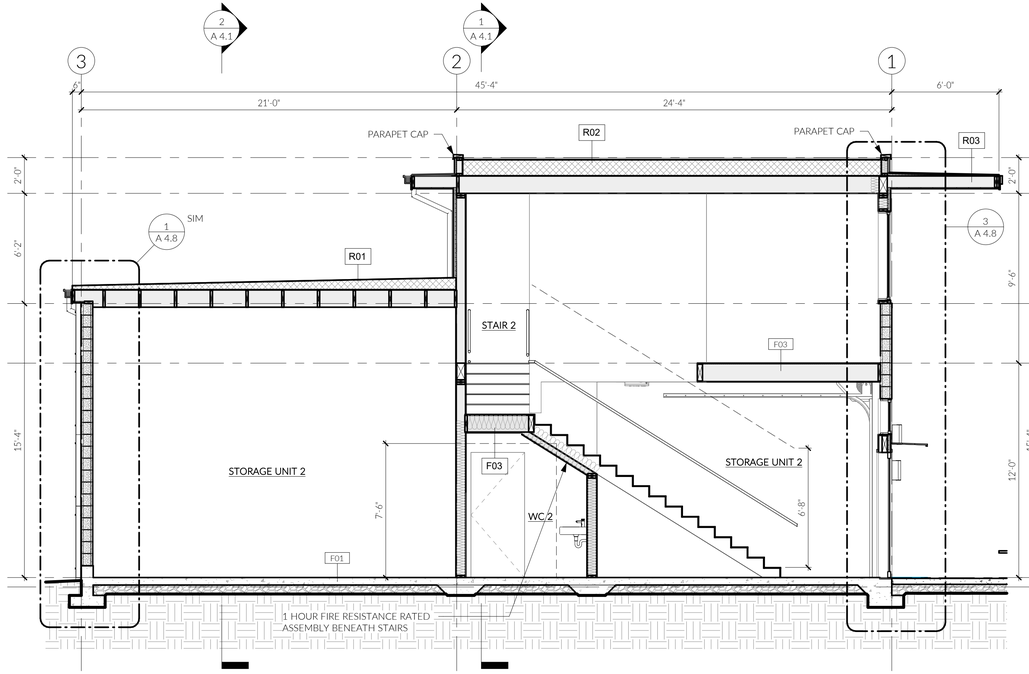

3 BUILDING SECTION - GLB.8
1/4" = 1'-0"

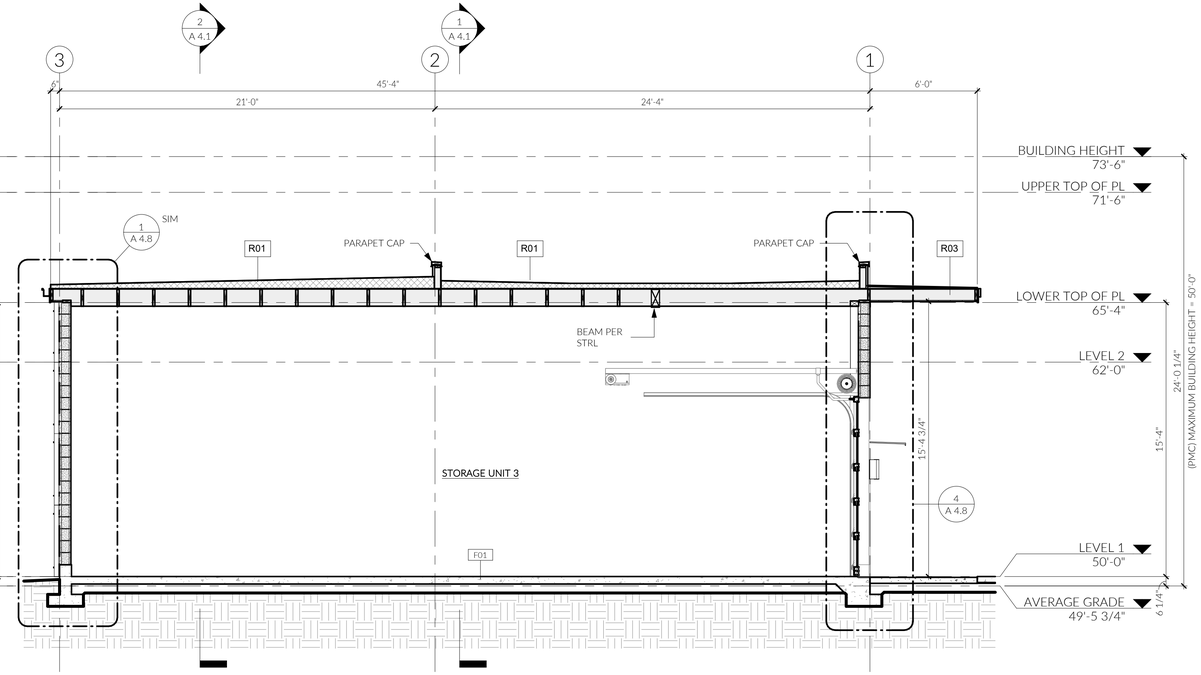

4 BUILDING SECTION - GLC.7
1/4" = 1'-0"

FIRST LAMP ARCHITECTS BUILDERS

206.414.9884
4915 RAINIER AVE S, STE 202
SEATTLE, WA 98118
INFO@FIRSTLAMP.NET

9547 REGISTERED ARCHITECT
TAYLOR BRIAN CALLAWAY
STATE OF WASHINGTON

5TH ST SE CUP
111 5TH ST SE
PUYALLUP, WA 98372

MUNICIPAL APPROVAL STAMPS

2203

PERMIT SUBMITTAL | 01.24.2025

REVISIONS

NO.	DESCRIPTION	DATE

DRAWN BY: MD

SECTIONS

A 4.0

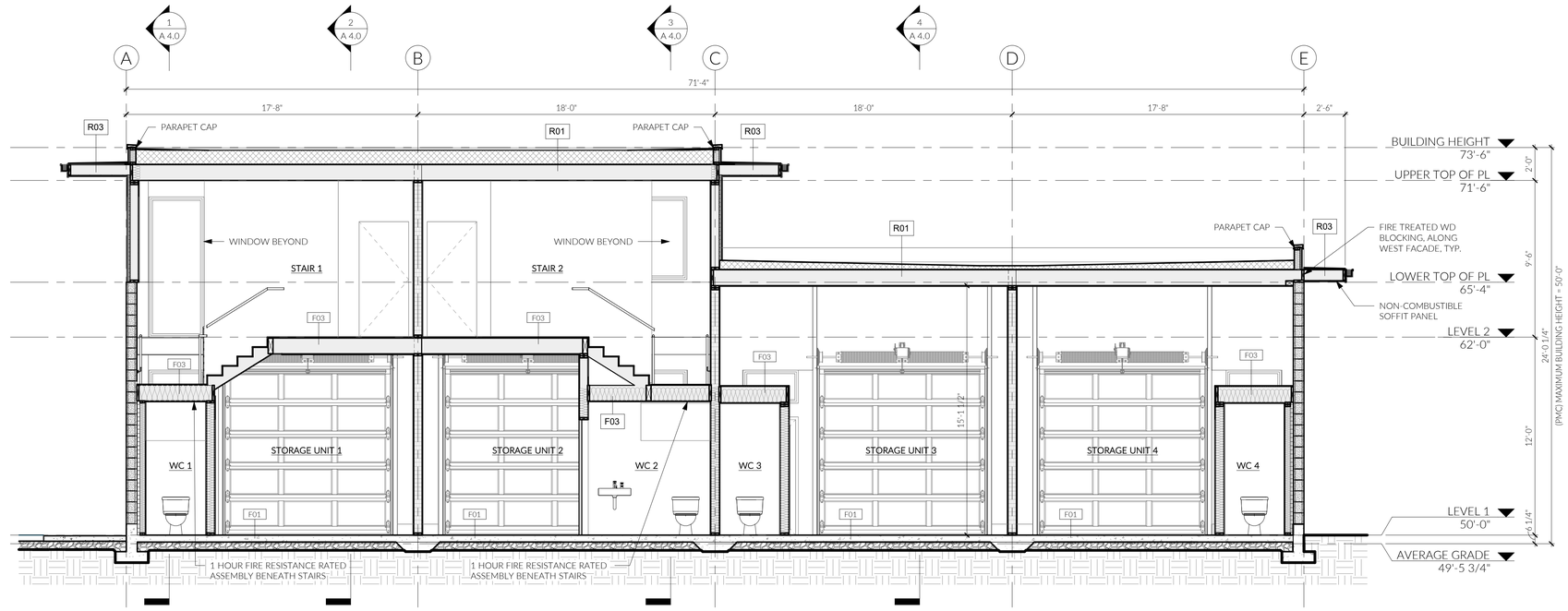

1 BUILDING SECTION - GL1.9
1/4" = 1'-0"

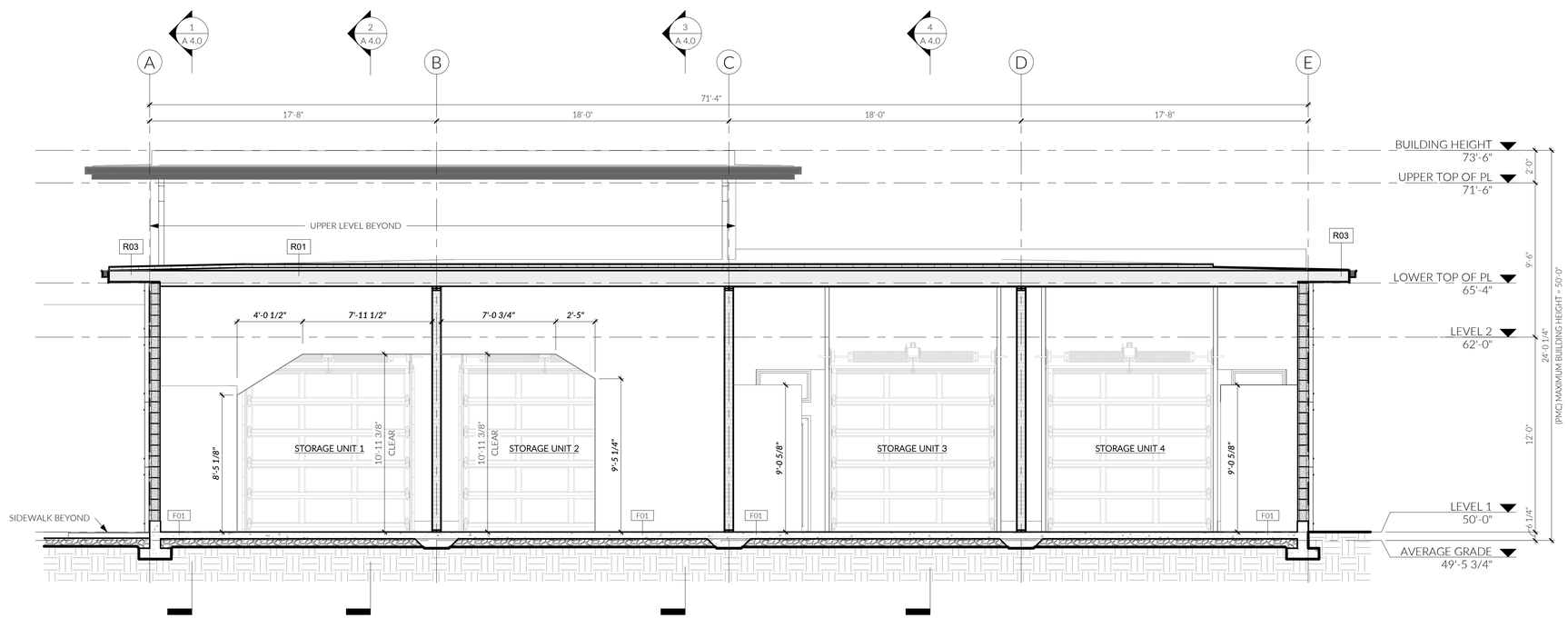

2 BUILDING SECTION - GL2.6
1/4" = 1'-0"

FIRST LAMP | ARCHITECTS BUILDERS

206.414.9884
4915 RAINIER AVE S, STE 202
SEATTLE, WA 98118
INFO@FIRSTLAMP.NET

9547 REGISTERED ARCHITECT
TAYLOR BRIAN CALLAWAY
STATE OF WASHINGTON

5TH ST SE CUP
111 5TH ST SE
PUYALLUP, WA 98372

MUNICIPAL APPROVAL STAMPS

2203

PERMIT SUBMITTAL | 01.24.2025

REVISIONS

NO.	DESCRIPTION	DATE

DRAWN BY: MD

SECTIONS

A 4.1

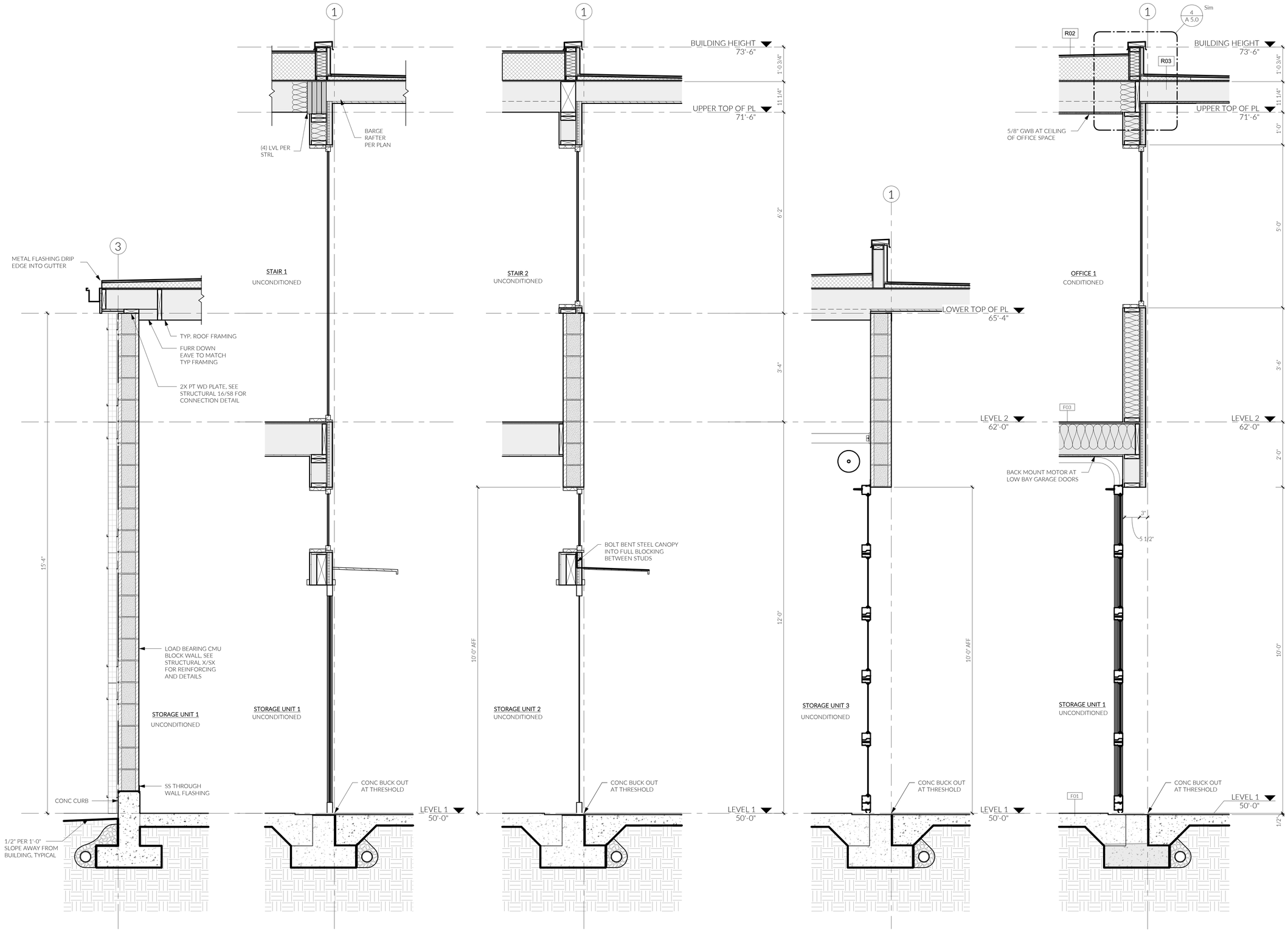

1 WALL SECTION
3/4" = 1'-0"

2 WALL SECTION
3/4" = 1'-0"

3 WALL SECTION
3/4" = 1'-0"

4 WALL SECTION
3/4" = 1'-0"

5 WALL SECTION
3/4" = 1'-0"

FIRST LAMP | ARCHITECTS BUILDERS

206.414.9884
4915 RAINIER AVE S, STE 202
SEATTLE, WA 98118
INFO@FIRSTLAMP.NET

9547 REGISTERED ARCHITECT
TAYLOR BRIAN CALLAWAY
STATE OF WASHINGTON

5TH ST SE CUP
111 5TH ST SE
PUYALLUP, WA 98372

MUNICIPAL APPROVAL STAMPS

2203

PERMIT SUBMITTAL | 01.24.2025

REVISIONS

NO.	DESCRIPTION	DATE

DRAWN BY: MD

WALL SECTIONS

A 4.8

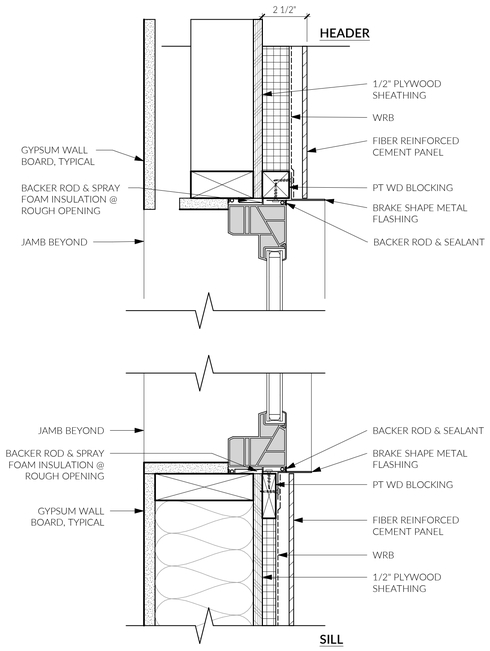

20 WINDOW HEADER / SILL DETAIL
3" = 1'-0"

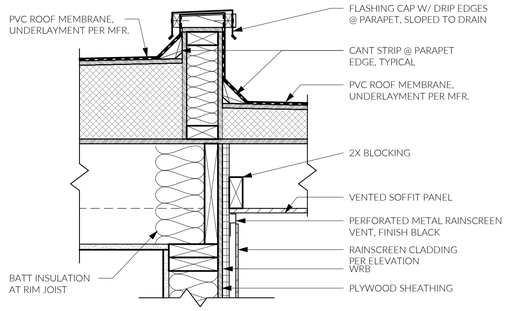

4 ROOF PARAPET AT CONDITION SPACE
1 1/2" = 1'-0"

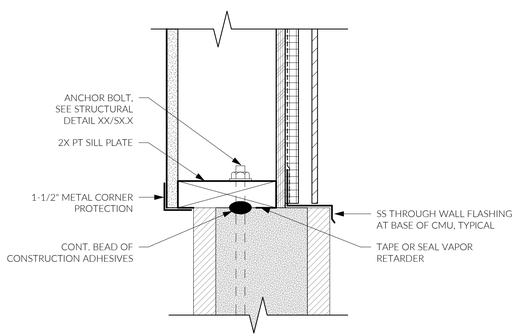

9 HORIZONTAL CMU TO FRAMING DETAIL
3" = 1'-0"

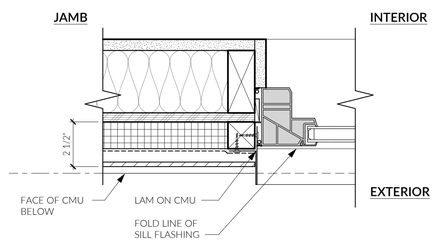

10 WINDOW JAMB DETAIL
3" = 1'-0"

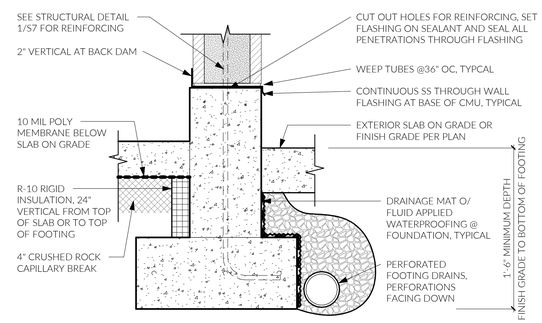

12 TYPICAL FOUNDATION DETAIL
1 1/2" = 1'-0"

FIRST LAMP ARCHITECTS BUILDERS
206.414.9884
4915 RAINIER AVE S, STE 202
SEATTLE, WA 98118
INFO@FIRSTLAMP.NET

9547 REGISTERED ARCHITECT
TAYLOR BRIAN CALLAWAY
STATE OF WASHINGTON

5TH ST SE CUP
111 5TH ST SE
PUYALLUP, WA 98372

MUNICIPAL APPROVAL STAMPS

2203

PERMIT SUBMITTAL | 01.24.2025

REVISIONS

NO.	DESCRIPTION	DATE

DRAWN BY: MD

DETAILS

A 5.0

DOOR SCHEDULE

NUMBER	TO ROOM	FROM ROOM	NOMINAL SIZE WIDTH	NOMINAL SIZE HEIGHT	PANEL TYPE	PANEL MATERIAL	PANEL FINISH	FRAME TYPE	FRAME MATERIAL	FRAME FINISH	PERFORMANCE FIRE RATING	PERFORMANCE U-FACTOR	HARDWARE SET	HARDWARE FUNCTION	Proximity Card Reader	COMMENTS
LEVEL 1																
100	WATER ENTRY ROOM	EXTERIOR	3'-0"	7'-0"	F	HM	PT-1	HMW	STL	PT-1	NR	0.37		STOREROOM		EXTERIOR WITH INSULATED CORE
101A	STORAGE UNIT 1	EXTERIOR	3'-0"	7'-0"	ALG/ALG	AL	ANOD-1	ALSF	AL	ANOD-1	NR	0.65		ENTRY		
101B	STORAGE UNIT 1	EXTERIOR	10'-0"	10'-0"	OGSD	AL	ANOD-1	-	-	-	NR	0.83		DEADBOLT		GARAGE OVERHEAD
101C	WC 1	STORAGE UNIT 1	3'-0"	7'-0"	F	HM	PT-2	HMW	STL	PT-2	NR	-		PRIVACY		
102A	STORAGE UNIT 2	EXTERIOR	3'-0"	7'-0"	ALG/ALG	AL	ANOD-1	ALSF	AL	ANOD-1	NR	0.65		ENTRY		ENTRY
102B	STORAGE UNIT 2	EXTERIOR	10'-0"	10'-0"	OGSD	AL	ANOD-1	-	-	-	NR	0.83		DEADBOLT		GARAGE OVERHEAD
102C	WC 2	STORAGE UNIT 2	3'-0"	7'-0"	F	HM	PT-2	HMW	STL	PT-2	NR	-		PRIVACY		
103A	STORAGE UNIT 3	EXTERIOR	3'-0"	7'-0"	ALG/ALG	AL	ANOD-1	ALSF	AL	ANOD-1	NR	0.65		ENTRY		ENTRY
103B	STORAGE UNIT 3	EXTERIOR	10'-0"	10'-0"	OGSD	AL	ANOD-1	-	-	-	NR	0.83		DEADBOLT		GARAGE OVERHEAD
103C	WC 3	STORAGE UNIT 3	3'-0"	7'-0"	F	HM	PT-2	HMW	STL	PT-2	NR	-		PRIVACY		
104A	STORAGE UNIT 4	EXTERIOR	3'-0"	7'-0"	ALG/ALG	AL	ANOD-1	ALSF	AL	ANOD-1	NR	0.65		ENTRY		ENTRY
104B	STORAGE UNIT 4	EXTERIOR	10'-0"	10'-0"	OGSD	AL	ANOD-1	-	-	-	NR	0.83		DEADBOLT		GARAGE OVERHEAD
104C	WC 4	STORAGE UNIT 4	3'-0"	7'-0"	F	HM	PT-2	HMW	STL	PT-2	NR	-		PRIVACY		
LEVEL 2																
201A	OFFICE 1	STAIR 1	3'-0"	7'-0"	F	HM	PT-2	HMW	STL	PT-2	NR	0.37		OFFICE		EXTERIOR WITH INSULATED CORE
202A	OFFICE 2	STAIR 2	3'-0"	7'-0"	F	HM	PT-2	HMW	STL	PT-2	NR	0.37		OFFICE		EXTERIOR WITH INSULATED CORE

DOOR NOTES
1. REFERENCE A2.1 & A2.2 FLOOR PLANS FOR DOOR OPERATION AND SWING DIRECTION. REFERENCE A3.0 & A3.1 ELEVATIONS FOR SAFETY GLAZING LOCATIONS.
2. ALL DOORS IN PLANE WITH ADJACENT DOORS OR WINDOWS ARE INTENDED TO HAVE THE HEADERS ALIGNED; UON. PLEASE NOTIFY ARCHITECT IF THERE IS A DISCREPENCY IN HEADER HEIGHTS OR ALIGNMENTS.
3. PROVIDE COMPRESSION SEALS AT ALL OPERABLE DOORS TO MAINTAIN ACOUSTICAL SEPARATION.

DOOR LEGEND

DOOR TYPE
- F — FLUSH
- F/F — DOUBLE FLUSH
- FP — FLUSH POCKET
- V — FLUSH VISION LIGHT
- N — FLUSH NARROW LIGHT
- HG — FLUSH HALF GLASS
- FG — FLUSH FULL GLASS
- FG/FG — DOUBLE FLUSH FULL GLASS
- SGD — SLIDING GLASS DOOR

DOOR MATERIAL
- AL — ALUMINUM
- HM — HOLLOW METAL
- FBGL — FIBERGLASS
- HCWD — HOLLOW CORE WOOD
- SCWD — SOLID CORE WOOD

FRAME TYPE
- ALSF — ALUMINUM STOREFRONT
- HMW — HOLLOW METAL FULLY WELDED
- HMKD — HOLLOW METAL KNOCK DOWN
- FBGL — FIBERGLASS
- WDS — SOLID WOOD
- KERF — METAL KERF

FRAME MATERIAL
- AL — ALUMINUM
- STL — STEEL, TIMELY TA-28
- FBGL — FIBERGLASS
- WD — WOOD

FINISH SPECIFICATION
- PBE-1 — POLYESTER BAKED ENAMEL, COLOR: ALUMATONE
- PT-1 — PAINT, COLOR: REFER TO ID FINISH SCHEDULES, PROVIDE EXTERIOR PRIMER AND PAINT AT EXTERIOR DOORS
- WD-1 — WOOD VENEER, SPECIES: REFER TO ID FINISH SCHEDULE
- ANOD-1 — ANODIZED ALUMINUM, COLOR: BLACK

GLAZING TYPE
- SG — SAFETY GLAZING, REFER TO GLAZING SCHEDULE NOTE 6 & 7

HARDWARE OPERATION
- ENTRY/OFFICE — LATCH, LOCK FROM EITHER SIDE
- PRIVACY — LATCH, LOCK FROM ONE SIDE
- PASSAGE — LATCH, NO LOCK
- STOREROOM — LATCH, ALWAYS LOCKED FROM THE OUTSIDE, WITH CLOSER
- DEADBOLT — DEADBOLT

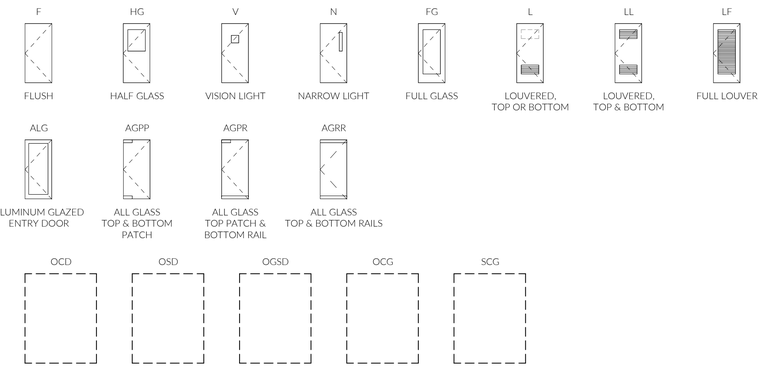

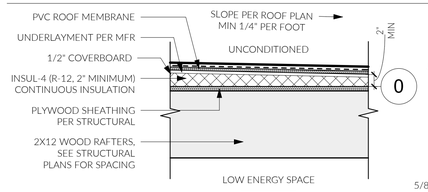

R01
MEMBRANE ROOF O/ UNCONDITIONED SPACE

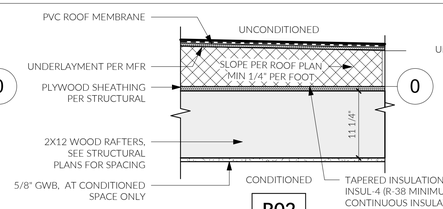

R02
MEMBRANE ROOF O/ CONDITIONED SPACE

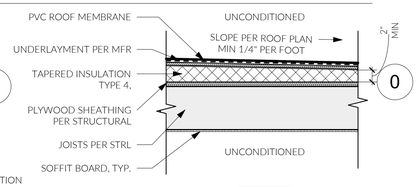

R03
EXTERNAL 2X8 DEPTH EAVE
1" STRIP VENT AT SOFFIT, TYPICAL

ROOF LEGEND
1" = 1'-0"

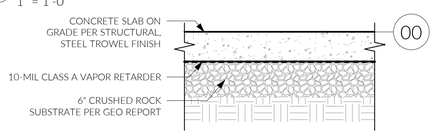

F01
CONCRETE SLAB ON GRADE
SEE A5.0 FOR BELOW GRADE INSULATION AT BUILDING PERIMETER

NOTE: GRIDLINES AND PLAN DIMENSIONS REFER TO FACE OF FRAMING MEMBER UON.

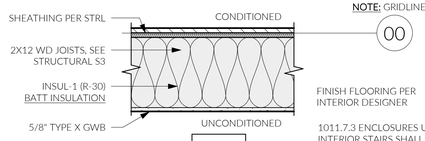

F03
2X12 FLOOR O/ UNCONDITIONED SPACE

1011.7.3 ENCLOSURES UNDER INTERIOR STAIRS SHALL BE PROTECTED BY A 1-HOUR FIRE-RESISTANCE RATED CONSTRUCTION

FLOOR LEGEND
1" = 1'-0"

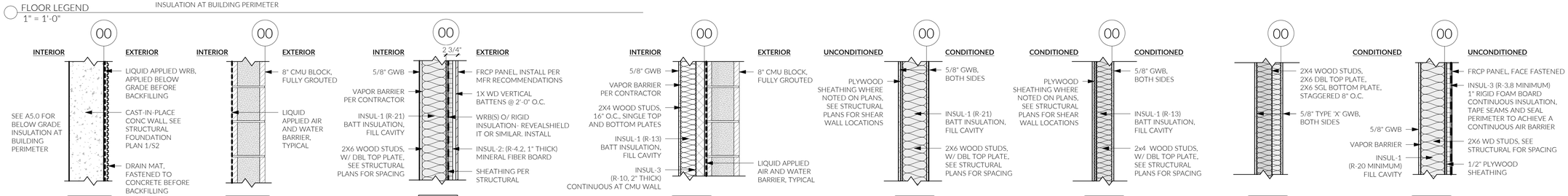

W01
CAST-IN-PLACE CONCRETE STEM WALL

W02
EXTERIOR CMU BEARING WALL

W03
EXTERIOR 2X6 RAINSCREEN WALL
BATT INSULATION OMITTED AT UNCONDITIONED SPACE

W04
INTERIOR 2X4 FURRING WALL
SEE PLANS AND SECTIONS FOR FURRING WALL LOCATION

W05
INTERIOR 2X6 PARTITION

W06
INTERIOR 2X4 PARTITION

W08
INTIERIOR TENANT DEMISING PARTITION STAGGERED STUDS

W09
INTERIOR 2X6 PARTITION THERMAL ENVELOPE

WALL LEGEND
1" = 1'-0"

NOTE: GRIDLINES AND PLAN DIMENSIONS REFER TO FACE OF FRAMING MEMBER UON.

WINDOW SCHEDULE

MARK	QUANTITY	TYPE	ROUGH OPENING DIM WIDTH	ROUGH OPENING DIM HEIGHT	WINDOW MATERIAL	WINDOW FINISH	WINDOW GLAZING TYPE	U-VALUE	SILL HEIGHT	HEAD HEIGHT
LEVEL 1										
C	4		3'-4"	2'-0"				0.65	8'-0"	10'-0"
LEVEL 2										
E	2		10'-0"	5'-0"				0.65	3'-6"	8'-6"
G	1		3'-4"	8'-6"			SAFETY GLAZING	0.65	0"	8'-6"
H	1		8'-0"	5'-0"				0.65	3'-6"	8'-6"
K	1		3'-4"	5'-0"				0.65	3'-6"	8'-6"

WINDOW NOTES
1. PLEASE REFER TO ELEVATIONS ON SHEET A3.0 & A3.1 FOR OPERATION, MULLING, SAFETY GLAZING, & SIMULATED DIVDED LITES.
2. ALL WINDOWS IN PLANE WITH ADJACENT DOORS OR WINDOWS ARE INTENDED TO HAVE THE HEADERS ALIGNED; UON. PLEASE NOTIFY ARCHITECT IF THERE IS A DISCREPENCY IN HEADER HEIGHTS OR ALIGNMENTS.

INSULATION TYPE LEGEND

ID	DESCRIPTION	R-VALUE (PER INCH)	R-VALUE	LOCATION
INSUL-1	UNFACED FIBERGLASS BATT		R-13 R-21 R-30	3 1/2" STUD 5 1/2" STUD FLOOR ABOVE UNCONDITIONED SPACE
INSUL-2	RIGID STONE WOOL BOARD	R-4.2	R-4.2	CONTINUOUS EXTERIOR AT RAIN SCREEN CLADDING
INSUL-3	RIGID EXTRUDED POLYSTYRENE - XPS	R-5	R-10	CONTINUOUS AT CMU MASS WALLS
INSUL-4	RIGID POLYISOCYANURATE BOARD - POLYISO	R-6	R-38 R-12	6.5" MINIMUM CONTINUOUS ABOVE DECK AT ROOF OVER HEATED SPACE 2" MINIMUM CONTINUOUS ABOVE DECK OVER LOW ENERGY SPACE
INSUL-5	RIGID HD EXPANDED POLYSTYRENE - EPS	R-5	R-10	2" AT PERIMETER TO 24" BELOW T.O. SLAB
INSUL-6	RIGID EXPANDED POLYSTYRENE - EPS	R-4	R-3.8 MIN	1" CONTINUOUS AT INTERIOR

INSULATION NOTES
1. WHERE TWO OR MORE LAYERS OF RIGID INSULATION WILL BE USED STAGGER EDGE JOINTS, EXCEPT WHERE INSULATION TAPERS TO THE ROOF DECK AT A GUTTER EDGE, ROOF DRAIN, OR SCUPPER.
2. INSULATION MATERIALS THAT ARE PROVIDED WITH AN R-VALUE IDENTIFICATION MARK SHALL BE INSTALLED SO THAT THE MARK IS READILY OBSERVABLE DURING INSPECTION.
3. INSULATION MATERIALS THAT ARE NOT INSTALLED WITH AN R-VALUE IDENTIFICAITON MARK, PROVIDE AN INSULATION CERTIFICATE IMMEDIATELY AFTER INSTALLATION IN A CONSPICUOUS LOCATION IN THE BUILDING SO IT IS READILY AVAILABLE DURING INSPECTION.

GENERAL NOTES

1. CONTRACTOR TO FIELD VERIFY ROUGH OPENINGS PRIOR TO ORDERING DOORS. SHOP DRAWINGS TO BE SUBMITTED FOR APPROVAL BY ARCHITECT.
2. PROVIDE GLAZING TO MEET ADJACENT WALL STC RATINGS, TYPICAL.
3. HAZARDOUS LOCATIONS REQUIRING SAFETY GLAZING PER IBC 2406.4. EXCEPTIONS APPLY PER IBC 2406.4.1 - 2406.4.7.
   A. GLAZING IN SWINGING, SLIDING AND BIFOLD DOORS,
   B. GLAZING ADJACENT TO DOORS WITH THE EXPOSED EDGE WITHIN A 24" ARC OF EITHER VERTICAL EDGE OF A DOOR IN THE CLOSED POSITION, & BOTTOM EDGE IS LESS THAN 60" ABOVE THE WALKING SURFACE.
   C. GLAZING IN WINDOWS MEETING THE FOLLOWING CONDITIONS: GREATER THAN 9 S.F., EXPOSED BOTTOM EDGE IS LESS THAN 18" ABOVE FINISHED FLOOR, EXPOSED TOP EDGE IS GREATER THAN 36" ABOVE THE FINISH FLOOR, AND ONE OR MORE WALKING SURFACES WITHIN 36" MEASURED HORIZONTALLY AND IN A STRAIGHT LINE OF THE PLANE OF GLAZING.
   D. GLAZING IN GUARDRAILS AND RAILINGS, REGARDLESS OF AREA OR HEIGHT ABOVE WALKING SURFACE,
   E. GLAZING IN ENCLOSURES FOR HOT TUBS, SPAS, WHIRLPOOLS, SAUNAS, STEAM ROOMS, BATHTUBS, SHOWERS AND ANY PORTION OF A BUILDING WALL ENCLOSING THESE COMPARTMENTS WHERE THE BOTTOM EXPOSED EDGE OF THE GLAZING IS LESS THAN 60" ABOVE STANDING OR WALKING SURFACE.
   F. GLAZING IN WALLS AND FENCES ENCLOSING INDOOR AND OUTDOOR SWIMMING POOLS, HOT TUBS AND SPAS WHEN THE BOTTOM EDGE OF GLAZING IS LESS THAN 60 INCHES ABOVE THE WALKING SURFACE AND THE GLAZING IS WITHIN 60 INCHES HORIZONTALLY FROM THE WATERS EDGE.
   G. GLAZING ADJACENT TO STAIRWAYS, LANDINGS, AND RAMPS WITHIN 36" HORIZONTALLY OF A WALKING SURFACE, WHEN THE EXPOSED SURFACE OF THE GLASS IS LESS THAN 60" ABOVE THE PLANE OF THE ADJACENT WALKING SURFACE.
   H. GLAZING ADJACENT TO THE BOTTOM STAIRWAY LANDING WHERE THE GLAZING IS LESS THAN 60" ABOVE THE LANDING AND WITHIN A 60" HORIZONTAL ARC FROM THE BOTTOM TREAD NOSING.
   I. ANY OTHER REQUIRED AREAS OR REQUIREMENTS AS LISTED IN THE IBC 2021, SECTION 2406.
4. PROVIDE SAFETY GLAZING IDENTIFICATION PER IBC SECTION 2406.3.
5. FENESTRATION PRODUCTS INCLUDING WINDOWS, DOORS, AND SKYLIGHTS SHALL BE LABELED WITH U-FACTOR, SHGC, VT AND LEAKAGE RATING IN ACCORDANCE WITH NFRC 100.
6. GARAGE DOORS AND ROLLING DOORS, U-FACTOR RATINGS SHALL BE DETERMINED IN ACCORDANCE WITH NFRC OR ANSI/DASMA 105.

ENERGY CODE COMPLIANCE

APPLICABLE CODE:	2021 WSEC-C
CLIMATE ZONE:	4C - PIERCE COUNTY
COMPLIANCE PATH:	PRESCRIPTIVE

SPACE CATEGORIES

S-1 STORAGE	LOW ENERGY, UNCONDITIONED
S-1 STORAGE UTILITY	SEMI-CONDITIONED
B OFFICE MEZZANINE	HEATED

SPACE CONDITIONING CATEGORIES

LOW ENERGY (UNCONDITIONED) SPACE R402.1.1

TOTAL GROSS FLOOR AREA	3,423.01 SF
TOTAL AREA OF ABOVE GRADE WALLS	4237.46 SF
TOTAL AREA OF GLAZING IN WALLS	567.22 + 40.00 = 607.22 SF
TOTAL AREA OF SKYLIGHTS	0 SF
GLAZING PERCENT	607.22 / 4237.46 = (0.143) 14.3 %

HEATED (CONDITIONED) SPACE PER R402.1

TOTAL GROSS FLOOR AREA	452.66 SF
TOTAL AREA OF ABOVE GRADE WALLS	277.60 SF
TOTAL AREA OF GLAZING IN WALLS	100.00 SF
TOTAL AREA OF SKYLIGHTS	0 SF
GLAZING PERCENT	100.00 / 277.60 = (0.360) 36.0 %

THERMAL ENVELOPE MINIMUM REQUIREMENTS

VERTICAL GLAZING FIXED, U-FACTOR	0.34
ENTRANCE DOOR, U-FACTOR	0.60
OPAQUE DOOR, U-FACTOR	0.37
ROOF CONTINOUS INSULATION ABOVE DECK	R-38CI
ROOF INSULATION ABOVE AND BELOW DECK	(R-29 BELOW + R-20CI ABOVE) R-49
WALL - ABOVE GRADE	R-20 + R-3.8CI
WALL MASS	R-9.5CI
FLOOR CONDITIONED OVER UNCONDITIONED SPACE	R-30
SLAB ON GRADE UNHEATED	R-10 FOR 24" DEPTH

ADDITIONAL ENERGY NOTES
1. NET FLOOR AREA IS THE ACTUAL OCCUPIED AREA NOT INCLUDING UNOCCUPIED ACCESSORY AREAS SUCH AS CORRIDORS, STAIRWAYS, TOILET ROOMS, MECHANICAL ROOMS AND CLOSETS.
2. OPAQUE DOOR IS A DOOR WITH LESS THAN 50% GLAZED AREA.
3. REQUIRED INSPECTIONS PER C105.2 TO INCLUDE BUT NOT LIMITED TO FOOTING AND FOUNDATION INSULATION, THERMAL ENVELOPE, PLUMBING SYSTEM, MECHANICAL SYSTEM, ELECTRICAL SYSTEM AND FINAL INSPECTIONS.
4. LOW ENERGY SPACES ARE EXEMPT FROM SECTION C402.
5. LOW ENERGY SPACES SERVED BY SPACE HEATING SYSTEMS SHALL COMPLY WITH SUFFICIENT MEASURES FROM TABLE C406.2(1) OR TABLE C406.2(2) TO ACHIEVE A MINIMUM 50% OF THE EFFICIENCY CREDITS REQUIRED FOR NEW CONSTRUCTION BY TABLE C401.3.3.
6. WALL ASSEMBLIES ENCLOSING A SEMI-HEATED SPACE ARE EXEMPT FROM THE OPAQUE WALL INSULATION REQUIREMENTS IN SECTION C402 PROVIDED THE FOLLOWING CONDITIONS ARE MET:
   A. NO MECHANICAL COOLING IS INSTALLED.
   B. OUTPUT CAPACITY OF HEATING SYSTEM DOES NOT EXCEED 8 BTU/H PER SF.
   C. HEATING SYSTEM IS OF A QUALIFYING TYPE.

   ALL OTHER ENVELOPE ASSEMBLIES SHALL COMPLY WITH THE THERMAL ENVELOPE PROVISIONS AS WELL.

PROJECT CLOSEOUT
1. AT PROJECT CLOSEOUT DOCUMENTATION IS REQUIRED INCLUDING ENVELOPE RECORD CONSTRUCTION DOCUMENTS, APPLICABLE CALCULATIONS, WSEC ENVELOPE COMPLIANCE REPORTS, AND FENESTRATION NFRC RATING CERTIFICATES.
2.
3. A THERMAL ENVELOPE CERTIFICATE IS REQUIRED AT PROJECT CLOSE OUT AND SHALL INCLUDE THE RATED R-VALUES OF ALL OPAQUE ASSEMBLY INSULATION, U-FACTORS & SHGCS FOR ALL FENESTRATION ASSEMBLIES.

FIRST LAMP | ARCHITECTS BUILDERS
206.414.9884
4915 RAINIER AVE S, STE 202
SEATTLE, WA 98118
INFO@FIRSTLAMP.NET

9547 REGISTERED ARCHITECT
TAYLOR BRIAN CALLAWAY
STATE OF WASHINGTON

5TH ST SE CUP
111 5TH ST SE
PUYALLUP, WA 98372

MUNICIPAL APPROVAL STAMPS

2203

PERMIT SUBMITTAL | 01.24.2025

REVISIONS

NO.	DESCRIPTION	DATE

DRAWN BY: MD

WINDOW & DOOR SCHEDULES, ASSEMBLIES

A 9.0

PROJECT NORTH

DESIGN CRITERIA

CODE: INTERNATIONAL BUILDING CODE - 2021 EDITION	
ROOF:	17 PSF
FLOORS:	
OFFICE	65 PSF
WIND:	
BASIC WIND SPEED	110 MPH
EXPOSURE	B
TOPOGRAPHICAL FACTOR, Kzt	1.0
SEISMIC:	
SPECTRAL RESPONSE ACCELERATION, Ss	1.269
SPECTRAL RESPONSE ACCELERATION, S1	0.437
SPECTRAL RESPONSE ACCELERATION, Sds	1.015
SPECTRAL RESPONSE ACCELERATION, Sd1	0.543
SOIL SITE CLASS. Fa	1.200
SOIL SITE CLASS, Fv	1.863
SEISMIC DESIGN CATEGORY	D
SEISMIC DESIGN (WOOD LEVELS):	
RESPONSE MODIFICATION FACTOR, R	6.5 (BRG WALL/SHEATHED WALLS) 5.0 (SPECIAL CMU SHEARWALLS)
REDUNDANCY FACTOR	1.3

GENERAL CONDITIONS

1. THE CONTRACTOR SHALL VERIFY AND REVIEW ALL ITEMS WITHIN THE DRAWINGS PRIOR TO PROCEEDING WITH THE WORK. NOTIFY THE ENGINEER/ARCHITECT IMMEDIATELY WITH ANY DISCREPANCIES.
2. IF A SPECIFIC DETAIL IS NOT SHOWN FOR ANY PART OF THE WORK, THE CONSTRUCTION SHALL BE THE SAME AS FOR SIMILAR WORK.
3. DIMENSIONS ARE NOT TO BE SCALED FROM THE PLANS, SECTIONS, OR DETAILS WITHIN THE DRAWINGS.
4. THE CONTRACTOR SHALL BE SOLELY RESPONSIBLE FOR THE CONSTRUCTION MEANS, METHODS, TECHNIQUES, SEQUENCE, AND PROCEDURES.
5. ALL WORK SHALL CONFORM TO THE MINIMUM STANDARDS OF THE REFERENCED BUILDING AND ALL OTHER REGULATING AGENCIES EXERCISING AUTHORITY OVER ANY PORTION OF THE WORK.
6. SPECIFIC NOTES AND DETAILS IN THE DRAWINGS SHALL TAKE PRECEDENCE OVER GENERAL NOTES AND SPECIFICATIONS.
7. NOTIFY THE ENGINEER OF ALL CHANGES MADE IN THE FIELD PRIOR TO INSTALLATION.

FOUNDATION

1. FOUNDATION DESIGN PARAMETERS ASSUMED BY OWNER:
   A. IBC SOIL SITE CLASSIFICATION.....D
   B. FOOTING BEARING PRESSURE.....1,500 PSF
   C. LATERAL EARTH PRESSURE:
      - ACTIVE.....35 PCF
      - PASSIVE.....250 PCF
      - COEFFICIENT OF FRICTION.....0.30
2. SUBGRADE PREPARATION, DRAINAGE PROVISIONS AND OTHER RELEVANT SOIL CONSIDERATIONS ARE TO BE IN ACCORDANCE WITH THE GEOTECHNICAL REPORT.
3. ALL FOUNDATIONS ARE TO BEAR ON COMPETENT NATIVE SOILS OR COMPACTED STRUCTURAL FILL. STRUCTURAL FILL IS TO BE COMPACTED TO 95% DENSITY PER ASTM D-1557.

CONCRETE

1. REFERENCE STANDARDS: ACI-301 AND ACI-318.
2. MINIMUM CONCRETE STRENGTH AT 28 DAYS: 2,500 PSI (5½ SACK MIX)
3. THE WATER/CEMENT RATIO SHALL NOT EXCEED: 0.5 (BY WEIGHT)
4. AGGREGATE GRADING SHALL COMPLY WITH AASHTO #57 GRADATION OR BETTER. PORTLAND CEMENT SHALL CONFORM TO ASTM C-150, TYPE II.
5. COMPLY WITH ACI-301 FOR MIXING. DO NOT EXCEED THE AMOUNT OF WATER SPECIFIED IN THE APPROVED MIX. PROPORTIONS OF AGGREGATE TO CEMENT SHALL BE SUCH AS TO PRODUCE A DENSE WORKABLE MIX WHICH CAN BE PLACED WITHOUT SEGREGATION OR EXCESSIVE FREE SURFACE WATER.
6. COMPLY WITH ACI-301 FOR PLACEMENT. PROVIDE A ¾ INCH CHAMFER AT ALL EXPOSED CONCRETE EDGES, UNLESS INDICATED OTHERWISE IN THE DRAWINGS.
7. MAXIMUM SLUMP TO BE 4" ± 1", TYPICAL. DO NOT ADD WATER TO THE MIX TO INCREASE SLUMP. MAXIMUM SLUMP MAY BE INCREASED BY 1" IF THE SLUMP IS TESTED DIRECTLY FROM THE TRUCK PRIOR TO BEING PUMPED INTO PLACE.
8. ACCELERATED SET OR HIGH EARLY STRENGTH MAY BE ACHIEVED BY USING APPROVED ADMIXTURES.
9. COMPLY WITH ACI-305R FOR PLACEMENT IN HOT WEATHER AND ACI-306R FOR PLACEMENT IN COLD WEATHER.
10. REFER TO ARCHITECTURAL DRAWINGS FOR CONCRETE FINISH. ALL EXPOSED CONCRETE IS TO HAVE A CLASS A FINISH.
11. PROVIDE AIR ENTRAINMENT OF 5% ± 1.5% FOR ALL CONCRETE EXPOSED TO WEATHER.

CONCRETE MASONRY UNITS

1. REFERENCE STANDARDS: ACI 530-02 AND ACI 530.1-02.
2. MINIMUM CONCRETE MASONRY UNITS (CMU) DESIGN STRENGTH:
   A. NET COMPRESSIVE STRENGTH, f'm 2,000 PSI
   B. MORTAR TYPE TYPE S
3. ALL MASONRY TO BE CONSTRUCTED IN RUNNING BOND OF NORMAL WEIGHT MASONRY UNITS. CONSTRUCTION LIFTS ARE NOT TO EXCEED 5'-0".
4. SOLID GROUT ALL CELLS UNLESS NOTED OTHERWISE.

REINFORCING STEEL

1. REFERENCE STANDARDS: ACI "DETAIL MANUAL" AND CRSI MANUAL OF STANDARD PRACTICE.
2. MATERIALS:
   A. REINFORCING STEEL: ASTM A615, GRADE 60
   B. WELDED WIRE REINFORCING: ASTM A82 AND A185, Fy = 75 KSI
3. LAP CONTINUOUS REINFORCING BARS PER REQUIREMENTS LISTED BELOW, UNLESS NOTED OTHERWISE. PROVIDE CORNER BARS OR HOOKS BARS (90 OR 180 DEGREE) AT THE END OF ALL HORIZONTAL REINFORCEMENT IN WALLS. REFER TO NOTE 6 FOR BEND REQUIREMENTS.

BAR SIZE	MIN. LAP LENGTH
#4	2'-6"
#5	3'-0"
#6	4'-6"

4. REINFORCEMENT COVER:
   FOOTINGS: 3 INCHES TO EARTH; 2 INCHES TO FORMED SURFACE
   SLABS: 2 INCHES TO EARTH
   FORMED SURFACE:
   EXTERIOR FACE 1½ INCHES, #5 BAR AND SMALLER; 2 INCHES, #6 BAR AND LARGER
   INTERIOR FACE ¾ INCHES FOR SLABS AND WALLS; 1½ INCHES FOR BEAMS AND COLUMNS
5. REINFORCING STEEL A615 MAY NOT BE WELDED TO OTHER STEEL ELEMENTS. (ACI 318-14 26.6.4.1)
6. REINFORCING STEEL BENDS AND HOOKS TO MEET ACI REQUIREMENTS (PER 25.3.2).

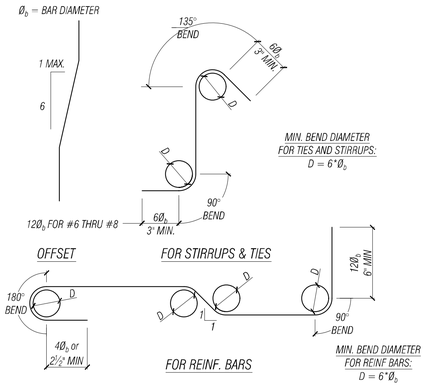

STRUCTURAL STEEL

1. REFERENCE STANDARDS: LATEST EDITION OF THE AISC "CODE OF STANDARD PRACTICE FOR STEEL BUILDINGS AND BRIDGES".
2. MATERIALS:
   BOLTS:
   STEEL TO WOOD - ASTM A307
   STEEL TO STEEL - ASTM A325
   STEEL TO CONCRETE - HEAVY HEX HEAD ASTM F1554 GR. 36
   WOOD TO CONCRETE - ASTM F1554 GR. 36
   W SHAPES: ASTM A992 (Fy = 50,000 PSI)
   TUBE STEEL: SQ/RECT - ASTM A500-10, GRADE B (Fy = 46,000 PSI MIN); ROUND - ASTM A500-10, GRADE B (Fy = 42,000 PSI MIN)
   ALL OTHER STEEL: ASTM A36 (Fy = 36,000 PSI)

STRUCTURAL STEEL WELDING

1. CONFORM TO THE AWS CODES D1.1 AND D1.3. USE ONLY STATE CERTIFIED WELDERS.
2. USE DRY E70 ELECTRODES.
3. WELDS ARE TO BE ¼ INCH CONTINUOUS FILLET WELDS UNLESS NOTED OTHERWISE IN THE DRAWINGS.

CONCRETE OR MASONRY ANCHORS

1. MECHANICAL ANCHORS ARE TO BE EITHER HILTI KWIK BOLT-TZ ANCHORS, SIMPSON STRONG-BOLT OR SIMPSON TITEN HD ANCHORS. ANCHOR SIZE AND EMBEDMENT IS AS SPECIFIED ON THE DRAWINGS OR IN THE FIELD.
2. EPOXY FOR THREADED RODS OR REBAR INTO CONCRETE OR SOLID GROUTED MASONRY IS TO BE SIMPSON SET-3G. COLD WEATHER INSTALLATION (BELOW 40°F), USE SIMPSON AT-3G. ROD OR REBAR SIZE AND EMBEDMENT IS AS SPECIFIED ON THE DRAWINGS OR IN THE FIELD.
3. EPOXY FOR THREADED RODS OR REBAR INTO HOLLOW CELL MASONRY IS TO BE EITHER HILTI HIT HY 70 WITH SCREEN TUBE, SIMPSON SET-3G WITH OPTI-MESH SCREEN TUBE OR APPROVED ALTERNATE. ROD OR REBAR SIZE AND EMBEDMENT IS AS SPECIFIED ON THE DRAWINGS OR IN THE FIELD.

DIMENSIONAL LUMBER

1. MEET THE REQUIREMENTS OF PS 20-70 AND NATIONAL GRADING RULES FOR SOFTWOOD DIMENSIONAL LUMBER. ALL MEMBERS ARE TO BEAR THE STAMP OF THE WWPA. MOISTURE CONTENT AT THE TIME OF FRAMING IS TO BE 19% OR LESS.
2. MINIMUM DIMENSIONAL LUMBER GRADES ARE TO BE:
   WALL STUDS: 2x DF STUD GRADE
   WALL PLATES: 2x DF STANDARD GRADE; 2x PT DF STANDARD GRADE; PER PLAN AT CONCRETE
   JOISTS: 2x DF #2
   HEADERS/BEAMS: 4x, 6x DF #2
   POSTS: 4x, 6x DF #2
3. ALL WOOD IN CONTACT WITH CONCRETE OR MASONRY SHALL BE PRESSURE TREATED LUMBER. NAILS AND PLATE WASHERS IN CONTACT WITH TREATED LUMBER SHALL BE HOT-DIPPED GALVANIZED. ANCHOR BOLTS AND LAG SCREWS IN TREATED LUMBER SHALL BE HDG OR ZINC COATED. PLAIN CARBON STEEL FASTENERS MAY BE USED WITH ZINC-BORATE TREATED LUMBER.
4. FOUNDATION SILL PLATES ARE TO BE BOLTED TO THE CONCRETE FOUNDATION WITH ⅝"Ø ANCHOR BOLTS EMBED A MINIMUM 7" OR ⅝"Ø MECHANICAL ANCHORS EMBED AS SPECIFIED ON DRAWINGS. PROVIDE A MINIMUM OF TWO BOLTS PER PLATE SECTION A MAXIMUM OF 9" FROM THE PLATE END. MAXIMUM SPACING OF ANCHORS IS TO BE 4'-0". PROVIDE 0.229"x3" SQ. WASHERS AT ALL ANCHOR BOLTS. WASHER EDGES MUST BE WITHIN ½" OF WALL SHEATHING.
5. SHOT PIN ATTACHMENTS FOR SILL PLATES ARE TO BE SIMPSON FASTENERS OR APPROVED ALTERNATE. SHOT PIN SIZES ARE AS FOLLOWS:

PLATE THICKNESS	EMBED MATERIAL	SHOT PIN
2x	CONC	PDPWL-250MG
2x	STEEL	PDPAW-200

6. BOLTS IN WOOD BEAMS SHALL NOT BE LESS THAN 7 DIAMETERS FROM THE END AND 4 DIAMETERS FROM THE MEMBER EDGE. PROVIDE STANDARD WASHERS FOR ALL NUTS BEARING AGAINST WOOD.
7. FASTEN ALL MEMBERS IN ACCORDANCE WITH IBC TABLE 2304.10.1, UNLESS NOTED OTHERWISE. PROVIDE MINIMUM 1½" EMBED FOR ALL NAILS. NAIL SIZES ARE AS FOLLOWS:

NAIL	MIN. SHANK DIA.
8d	0.131"
10d	0.148"
16d	0.162"

8. HOLES AND NOTCHES IN WOOD MEMBERS ARE TO BE LIMITED AS FOLLOWS:

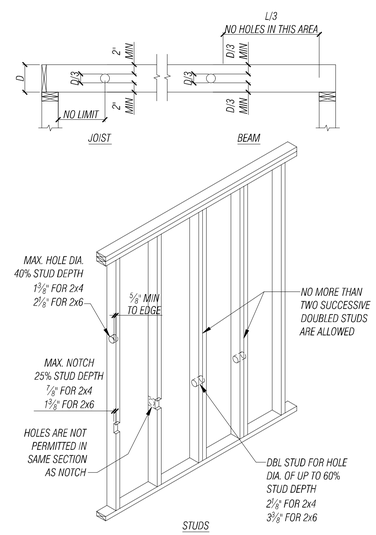

GLU-LAMINATED MEMBERS

1. SINGLE-SPAN GLU-LAMINATED WOOD MEMBERS ARE TO BE DOUGLAS FIR, KILN DRIED AND AITC SPECIFICATION 24F-V4, UNLESS NOTED OTHERWISE. MULTI-SPAN OR CANTILEVERED GLU-LAMINATED WOOD MEMBERS TO BE AITC SPECIFICATION 24F-V8, UNLESS OTHERWISE NOTED. BEAMS ARE HAVE A 2,000 FT RADIUS CAMBER, UNLESS NOTED OTHERWISE.
2. MATERIALS MUST BE OBTAINED FROM AN AITC APPROVED FABRICATOR AND BEAR THE AITC STAMP.
3. THE GLUE IS TO BE A "WET-USE" ADHESIVE.

MANUFACTURED LUMBER

1. PARALLEL STRAND LUMBER (PSL) IS TO BE 2.0E PARALLAM MANUFACTURED BY TRUSJOIST BY WEYERHAUESER OR ENGINEER APPROVED EQUAL.
2. LAMINATED VENEER LUMBER (LVL) IS TO BE 2.0E MICROLLAM MANUFACTURED BY TRUSJOIST BY WEYERHAUESER OR ENGINEER APPROVED EQUAL.
3. LAMINATED STRAND LUMBER (LSL) IS TO BE:
   - 1½" WIDE LSL 1.3E OR BETTER
   - 3½" WIDE LSL 1.55E OR BETTER

   MANUFACTURED BY TRUSJOIST BY WEYERHAUESER OR ENGINEER APPROVED EQUAL.
4. MANUFACTURED I-JOISTS ARE TO BE TJI SERIES MEMBERS AND SPECIFIED IN THE DRAWINGS MANUFACTURED BY TRUSJOIST BY WEYERHAUESER OR ENGINEER APPROVED EQUAL.

WOOD SHEATHING

1. ROOF SHEATHING. MINIMUM THICKNESS PER PLAN. APA RATED, EXP-1 RATING, EDGE SEALED PANELS CONFORMING TO INDENTIFICATION INDEX 32/16 FOR SLOPES GREATER THAN 3/12 AND 40/20 FOR SLOPES 3/12 AND LESS. PROVIDE MINIMUM 1/8" CLEAR BETWEEN PANELS TO ALLOW FOR EXPANSION. NAIL 6 INCHES ON CENTER ALONG EDGES AND 12 INCHES ON CENTER AT INTERMEDIATE SUPPORTS, UNLESS NOTED OTHERWISE. USE 8d COMMON NAILS.
2. FLOOR SHEATHING. MINIMUM THICKNESS PER PLAN. APA RATED STURD-I-FLOOR, EXP-1 RATING, TONGUE AND GROOVE EDGES CONFORMING TO IDENTIFICATION INDEX 48/24. PROVIDE MINIMUM 1/8" CLEAR BETWEEN PANELS TO ALLOW FOR EXPANSION. NAIL AND GLUE TO SUPPORTS. GLUE ADHESIVE IS TO CONFORM TO APA SPECIFICATION AFG-01. NAIL 6 INCHES ON CENTER ALONG EDGES AND 12 INCHES ON CENTER AT INTERMEDIATE SUPPORTS, UNLESS NOTED OTHERWISE. USE 10d COMMON NAILS.

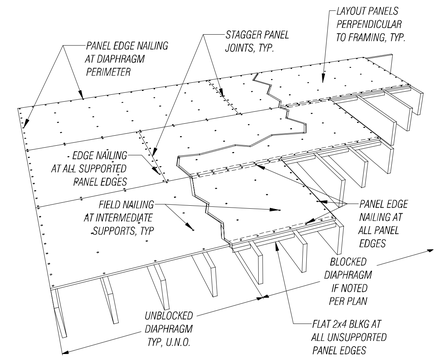

ROOF/FLOOR DIAPHRAGM NAILING

3. WOOD SHEARWALL SHEATHING. MINIMUM THICKNESS PER PLAN. PLYWOOD OR OSB APA RATED, EXP-1 RATING. NAILING PER DRAWINGS.

MECHANICAL HARDWARE CONNECTORS

1. ALL MECHANICAL HARDWARE USED FOR CONNECTIONS ARE TO BE MANUFACTURED BY SIMPSON STRONG TIE OR EQUIVALENT HAVING A CAPACITY GREATER THAN OR EQUAL.
2. ALL MECHANICAL CONNECTORS USED WITH PRESSURE TREATED WOOD ARE TO HAVE A ZINC FINISH UNLESS NOTED OTHERWISE ON THE PLANS.
3. FASTENERS ARE TO MATCH MANUFACTURER'S SPECIFICATION, ALWAYS USE HIGHEST CAPACITY REQUIREMENTS. FASTENERS USED WITH ZINC COAT FINISH CONNECTORS ARE TO BE HOT-DIPPED GALVANIZED CONFORMING TO ASTM A153. FILL ALL HOLES WITH FASTENERS AND DO NOT OVER DRIVE.
4. THROUGH BOLT FASTENERS ARE TO BE MACHINE BOLTS CONFORMING TO ASTM STANDARD A307, GRADE A. NUTS USED WITH THROUGH BOLTS, THREADED RODS AND ANCHOR BOLTS SHALL BE AT LEAST FLUSH WITH THE TOP OF NUT.
5. JOISTS AND BEAMS SHALL BEAR FULLY ON THE CONNECTOR SEAT AND THE GAP BETWEEN MEMBERS SHALL NOT EXCEED 1/8".

ABBREVIATIONS:

A. BOLT	ANCHOR BOLT
ADD'L	ADDITIONAL
A.F.F	ABOVE FINISH FLOOR
ALT	ALTERNATE
APPROX	APPROXIMATE
ARCH	ARCHITECTURAL
BLKG	BLOCKING
BM	BEAM
B.O.O.	BOTTOM OF OPENING
BTM	BOTTOM
BRG	BEARING
BTW	BETWEEN
CLR	CLEAR
CMU	CONCRETE MASONRY UNIT
COL	COLUMN
CONC	CONCRETE
COND	CONDITION
CONN	CONNECTION
CONST	CONSTRUCTION
CONT	CONTINUOUS
DBL	DOUBLE
DIA	DIAMETER
DIM	DIMENSION
DL	DEAD LOAD
EA	EACH
EF	EACH FACE
ELEV	ELEVATION
EN	EDGE NAILING
EQ	EQUAL
EQUIP	EQUIPMENT
ES	EACH SIDE
EXIST	EXISTING
EXT	EXTERIOR
FD	FLOOR DRAIN
FDN	FOUNDATION
FF	FINISH FLOOR
FG	FINISH GRADE
FLFR	FLUSH FRAMED
FLR	FLOOR
FT	FEET
FTG	FOOTING
FRT	FIRE RETARDANT TREATED
FS	FAR SIDE
GA	GAUGE
GALV	GALVANIZED
GLB	GLUE LAMINATED BEAM
HDR	HEADER
HGR	HANGER
HORIZ	HORIZONTAL
HT	HEIGHT
I.F.	INSIDE FACE
IN	INCH
LL	LIVE LOAD
MAX	MAXIMUM
MECH	MECHANICAL
MFR	MANUFACTURER
MIN	MINIMUM
MISC	MISCELLANEOUS
NS	NEAR SIDE
NTS	NOT TO SCALE
O.C.	ON CENTER
PARA	PARALLEL
PERP	PERPENDICULAR
PSF	POUNDS PER SQUARE FOOT
PSI	POUNDS PER SQUARE INCH
PT	PRESSURE TREATED
RAP	RAMMED AGGREGATE PIER
REINF	REINFORCING
REQ'D	REQUIRED
SCHD	SCHEDULE
SEC	SECTION
SF	SQUARE FEET
SIM	SIMILAR
SPEC	SPECIFICATIONS
STD	STANDARD
STL	STEEL
STRUCT	STRUCTURAL
SW	SHEARWALL
THRU	THROUGH
TOC	TOP OF CONCRETE
TOF	TOP OF FOOTING
T.O.O.	TOP OF OPENING
TOS	TOP OF STEEL
TOW	TOP OF WALL
TS	TUBE STEEL
TYP	TYPICAL
U.N.O.	UNLESS NOTED OTHERWISE
VERT	VERTICAL
W/	WITH
WF	WIDE FLANGE
WHS	WELDED HEADED STUD
WTS	WELDED THREADED STUD
WT	WEIGHT
WWR	WELDED WIRE REINFORCING

SHEET INDEX:

S1 - GENERAL NOTES
S1.1 - GENERAL NOTES (CONT.)
S2 - FOUNDATION PLAN
S3 - SECOND FLOOR FRAMING PLAN
S4 - ROOF FRAMING PLAN
S5 - FIRST FLOOR SHEARWALL PLAN
S5.1 - SECOND FLOOR SHEARWALL PLAN
S6 - CMU WALL ELEVATION
S7 - FOUNDATION, CMU, AND SHEARWALL DETAILS
S8 - FRAMING DETAILS

NO.	DATE	BY	REVISION

ANY INFORMATION OR DATA ON THIS DRAWING IS NOT INTENDED TO BE SUITABLE FOR REUSE BY ANY PERSON, FIRM, CORPORATION, OR ANY OTHERS ON EXTENSIONS OF THIS PROJECT OR FOR ANY USE ON ANY OTHER PROJECT. ANY REUSE WITHOUT WRITTEN VERIFICATION AND ADAPTATION BY THE ENGINEER FOR THE SPECIFIC PURPOSE INTENDED WILL BE AT THE USER'S SOLE RISK AND WITHOUT LIABILITY OR LEGAL EXPOSURE TO THE ENGINEER.

FACET
P: 360.899.1110
www.facetnw.com
2210 Riverside Dr, Suite #110
Mount Vernon, WA 98273
FEDERAL WAY | KIRKLAND | MOUNT VERNON | SEATTLE | SPOKANE | WHIDBEY ISLAND

JONATHAN M. HARRIS
STATE OF WASHINGTON
46132
10/17/2024
STRUCTURAL ENGINEER
PROFESSIONAL ENGINEER

PUYALLUP STORAGE BUILDING

111 5HT ST SE
PUYALLUP, WA 98372
PROJECT NUMBER: 2401.0362

PERMIT SUBMITTAL

GENERAL NOTES

DATE: 10/17/2024

PLAN NUMBER:

S1

FILE LOCATION: Z:\SHARED\PROJECTS\ACTIVE\2024\01\2401.0362 1ST LMP - PUYALLUP STORAGE BLDG\DRAWINGS\CAD\ACTIVEFILE\PUYALLUP STRG BLDG_S1.DWG - ORIGINAL SHEET SIZE: ARCH FULL BLEED D (36.00 X 24.00 INCHES) - LAST MODIFIED BY: JOEL HARKNESS
PRINCIPAL: JJ PROJECT MANAGER: SDT DESIGNED BY: LO, SDT DRAWN BY: JH CHECKED BY: JJ

SHOP DRAWINGS AND SUBMITTALS

1. SUBMIT LAYOUT DRAWINGS IN PDF FORMAT FOR REVIEW OF:
   A. REINFORCING STEEL

2. SUBMIT SPECIFICATIONS IN PDF FORMAT FOR REVIEW OF:
   A. CONCRETE INSERTS
   B. CONCRETE MIX DESIGN

DEFERRED SUBMITTALS

1. PLANS FOR DEFERRED SUBMITTAL ITEMS SHALL BE SUBMITTED IN A TIMELY MANNER THAT ALLOWS A MINIMUM OF 10 WORKING DAYS FOR THE ENGINEER PLUS AN ADDITIONAL 30 WORKING DAYS FOR INITIAL PLAN REVIEW FROM THE CITY. ALL COMMENTS RELATED TO THE DEFERRED SUBMITTAL MUST BE ADDRESSED TO THE SATISFACTION OF THE PLAN CHECK DIVISION PRIOR TO APPROVAL OF THE SUBMITTED ITEMS.

2. THE DEFERRED SUBMITTAL ITEMS INCLUDE THE FOLLOWING:
   A. AWNINGS

SPECIAL INSPECTIONS

1. SPECIAL INSPECTIONS ARE TO BE PERFORMED BY INDEPENDENT, JURISDICTIONALLY APPROVED AGENCY IN ACCORDANCE WITH IBC SECTION 1703 AND PROVIDE THE DUTIES AND RESPONSIBILITIES AS INDICATED IN SECTION 1704.

2. A CERTIFICATE OF SATISFACTORY COMPLETION OF WORK REQUIRING SPECIAL INSPECTION MUST BE COMPLETED AND SUBMITTED TO THE BUILDING OFFICIAL UPON COMPLETION OF PROJECT.

3. SPECIAL INSPECTION IS NOT A SUBSTITUTE FOR INSPECTION BY A JURISDICTIONAL INSPECTOR.

4. THE SPECIAL INSPECTIONS REQUIRED FOR THIS PROJECT ARE AS NOTED IN THE SUMMARY OF SPECIAL INSPECTION.

JOB SITE SAFETY

THE ENGINEER HAS NOT BEEN RETAINED OR COMPENSATED TO PROVIDE DESIGN AND/OR CONSTRUCTION REVIEW SERVICES RELATED TO THE CONTRACTOR'S SAFETY PRECAUTIONS OR TO MEANS, METHODS, TECHNIQUES OR PROCEDURES FOR THE CONTRACTOR TO PERFORM THE WORK. THE UNDERTAKING OF PERIODIC SITE VISITS BY THE ENGINEER SHALL NOT BE CONSTRUED AS SUPERVISION OF ACTUAL CONSTRUCTION NOR MAKE HIM RESPONSIBLE FOR PROVIDING A SAFE PLACE FOR THE PERFORMANCE OF THE WORK BY THE CONTRACTOR, SUB-CONTRACTOR OR ANY PERSON ON THE SITE.

SUMMARY OF SPECIAL INSPECTION

ITEM	INSPECTION REQUIRED	REMARK
CONCRETE	VERIFY MIX DESIGN SUPPLIED MEETS APPROVED MIX DESIGN; PERIODIC INSPECTION	REFER TO STAMPED MIX DESIGN BY DCG
	PLACEMENT OF CONCRETE, INCLUDES VERIFYING SLUMP AND AIR CONTENT TESTS; CONTINUOUS INSPECTION	REFER TO DRAWINGS; NOT REQUIRED FOR SITE-WORK CONCRETE
	VERIFY ANCHOR BOLTS ARE PLACED AND TIED PROPERLY; CONTINUOUS INSPECTION	REFER TO DRAWINGS
STRUCTURAL MASONRY	PRIOR TO GROUT PLACEMENT	PERIODIC REVIEW OF SITE-PREPARED GROUT PROPORTIONS OR APPROVED MIX DESIGN CERTIFICATE FROM SUPPLIER
		PERIODIC REVIEW OF REINFORCING, INCLUDING SIZE AND SPACING
		PERIODIC REVIEW OF TYPE, SIZING AND LOCATION OF ANCHOR BOLTS
	GROUT PLACEMENT	PERIODIC INSPECTION THAT GROUT SPACE IS CLEAN
		CONTINUOUS INSPECTION DURING GROUT PLACEMENT
REINFORCING STEEL	VERIFY PLACEMENT, COVER AND BAR SIZE; PERIODIC INSPECTION	REFER TO DRAWINGS
	VERIFY GRADE; PERIODIC INSPECTION	ASTM A615, GRADE 60
EPOXY OR MECHANICAL ANCHORS	VERIFY INSTALLATION SIZE AND DEPTH; CONTINUOUS INSPECTION	REFER TO DRAWINGS OR FIELD DIRECTIVES
WOOD FLOOR/WALL DIAPHRAGMS	VERIFY NAIL SIZE, SPACING, SHEATHING TYPE AND BLOCKING FOR ALL WALLS; PERIODIC INSPECTION	REFER TO DRAWINGS
	VERIFY NAIL SIZE, SPACING, SHEATHING TYPE AND BLOCKING FOR ALL FLOOR/ROOF DIAHRAGMS; PERIODIC INSPECTION	REFER TO DRAWINGS
	VERIFY INSTALLATION OF HOLDOWNS; PERIODIC INSPECTION	REFER TO DRAWINGS

NO.	DATE	BY	REVISION

ANY INFORMATION OR DATA ON THIS DRAWING IS NOT INTENDED TO BE SUITABLE FOR REUSE BY ANY PERSON, FIRM, CORPORATION, OR ANY OTHERS ON EXTENSIONS OF THIS PROJECT OR FOR ANY USE ON ANY OTHER PROJECT. ANY REUSE WITHOUT WRITTEN VERIFICATION AND ADAPTATION BY THE ENGINEER FOR THE SPECIFIC PURPOSE INTENDED WILL BE AT THE USER'S SOLE RISK AND WITHOUT LIABILITY OR LEGAL EXPOSURE TO THE ENGINEER.

FACET
2210 Riverside Dr,
Suite #110
Mount Vernon, WA 98273
P: 360.899.1110
www.facetnw.com
FEDERAL WAY | KIRKLAND | MOUNT VERNON | SEATTLE | SPOKANE | WHIDBEY ISLAND

JONATHAN M. JAMES
STATE OF WASHINGTON
46132
10/17/2024
STRUCTURAL ENGINEER
PROFESSIONAL ENGINEER

PUYALLUP STORAGE BUILDING

111 5HT ST SE
PUYALLUP, WA 98372
PROJECT NUMBER: 2401.0362

PERMIT SUBMITTAL

GENERAL NOTES

DATE: 10/17/2024

PLAN NUMBER:

S1.1

FILE LOCATION: Z:\SHARED\PROJECTS\ACTIVE\2024\01\2401.0362 1ST LMP - PUYALLUP STORAGE BLDG\DRAWINGS\CAD\ACTIVEFILE\PUYALLUP STRG BLDG_S1.DWG - ORIGINAL SHEET SIZE: ARCH FULL BLEED D (36.00 X 24.00 INCHES) - LAST MODIFIED BY: JOEL HARKNESS
PRINCIPAL: JJ PROJECT MANAGER: SDT DESIGNED BY: LO, SDT DRAWN BY: JH CHECKED BY: JJ

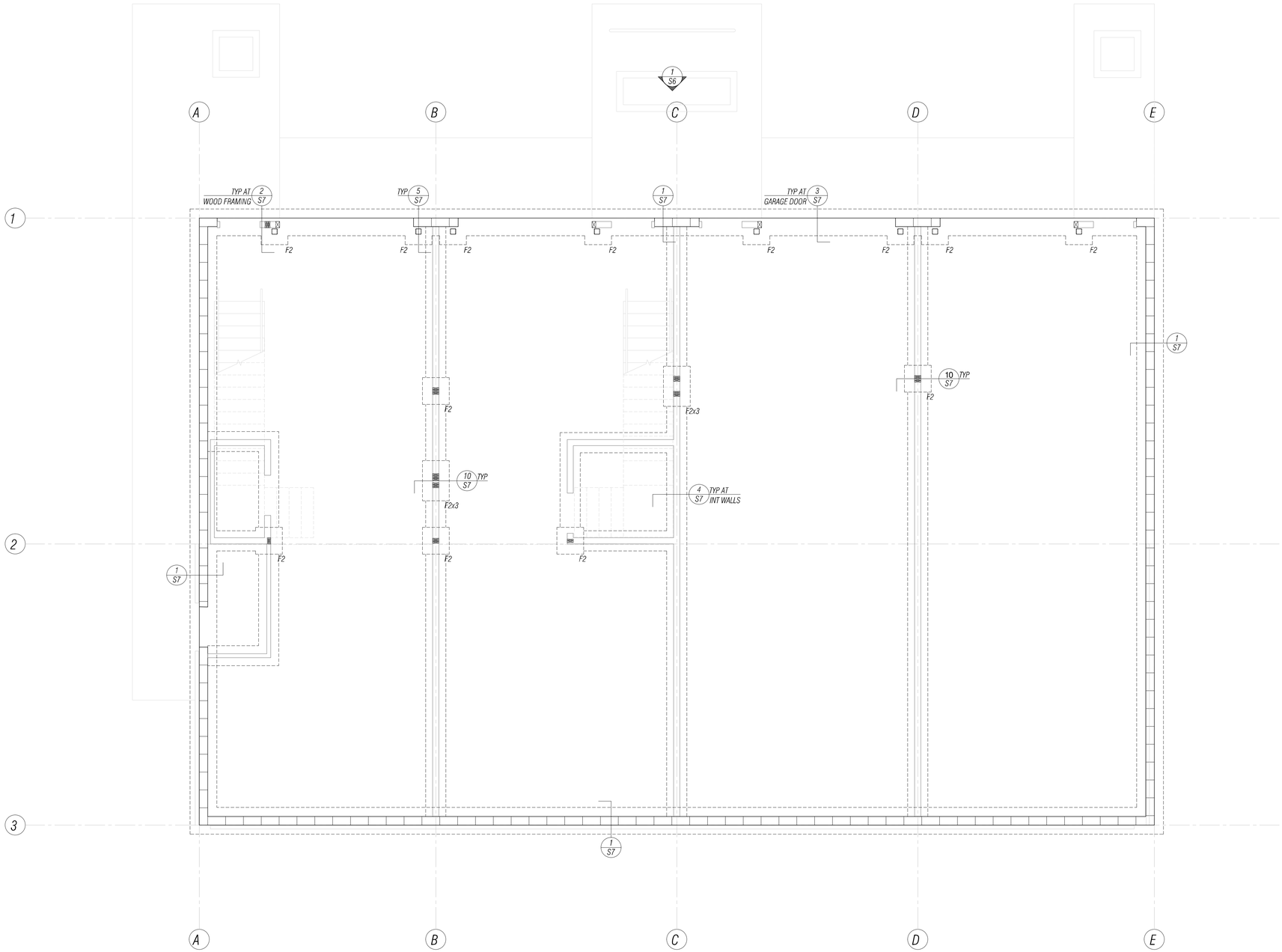

FOUNDATION PLAN

1 / S2

SCALE 1/4" = 1'-0"

FOUNDATION NOTES:

1. REFER TO SHEET S5-S5.1 FOR SHEARWALL REQUIREMENTS AND HOLDOWN LOCATIONS.
2. PROVIDE FOOTING DRAIN AROUND PERIMETER OF BUILDINGS.
3. FOOTINGS ARE TO BEAR ON COMPETENT NATIVE SOIL OR STRUCTURAL FILL CAPABLE OF SUPPORTING THE ALLOWABLE BEARING PRESSURE OF 1,500 PSF.
4. PROVIDE #4 CORNER FTG BAR FOR EACH HORIZONTAL BAR. LAP 2'-0" MIN.

FOOTING SCHEDULE

MARK	SIZE	THICKNESS	REINFORCING
F2	2'-0" SQ	8"	(2) #4B EA WAY
F2x3	2'-0"x3'-0"	8"	(3) #4B EA WAY

POST SCHEDULE

MARK	SIZE
A	HSS 5"SQx1/4"
B	4x6

NO.	DATE	BY	REVISION

ANY INFORMATION OR DATA ON THIS DRAWING IS NOT INTENDED TO BE SUITABLE FOR REUSE BY ANY PERSON, FIRM, CORPORATION, OR ANY OTHERS ON EXTENSIONS OF THIS PROJECT OR FOR ANY USE ON ANY OTHER PROJECT. ANY REUSE WITHOUT WRITTEN VERIFICATION AND ADAPTATION BY THE ENGINEER FOR THE SPECIFIC PURPOSE INTENDED WILL BE AT THE USER'S SOLE RISK AND WITHOUT LIABILITY OR LEGAL EXPOSURE TO THE ENGINEER.

FACET
P: 360.899.1110
www.facetnw.com
2210 Riverside Dr,
Suite #110
Mount Vernon, WA 98273
FEDERAL WAY | KIRKLAND | MOUNT VERNON | SEATTLE | SPOKANE | WHIDBEY ISLAND

JORDAN JAMES HARKNESS
STATE OF WASHINGTON
46132
10/17/2024
STRUCTURAL ENGINEER
PROFESSIONAL ENGINEER

PUYALLUP STORAGE BUILDING

111 5HT ST SE
PUYALLUP, WA 98372
PROJECT NUMBER: 2401.0362

PERMIT SUBMITTAL

FOUNDATION PLAN

DATE: 10/17/2024

PLAN NUMBER:

S2

FILE LOCATION: Z:\SHARED\PROJECTS\ACTIVE\2024\01\2401.0362 1ST LMP - PUYALLUP STORAGE BLDG\DRAWINGS\CAD\ACTIVE\FLER\PUYALLUP STRG BLDG_S2.DWG - ORIGINAL SHEET SIZE: ARCH FULL BLEED D (24.00 X 36.00 INCHES) - LAST MODIFIED BY: JOEL HARKNESS
PRINCIPAL: JJ PROJECT MANAGER: SDT DESIGNED BY: LO, SDT DRAWN BY: JH CHECKED BY: JJ

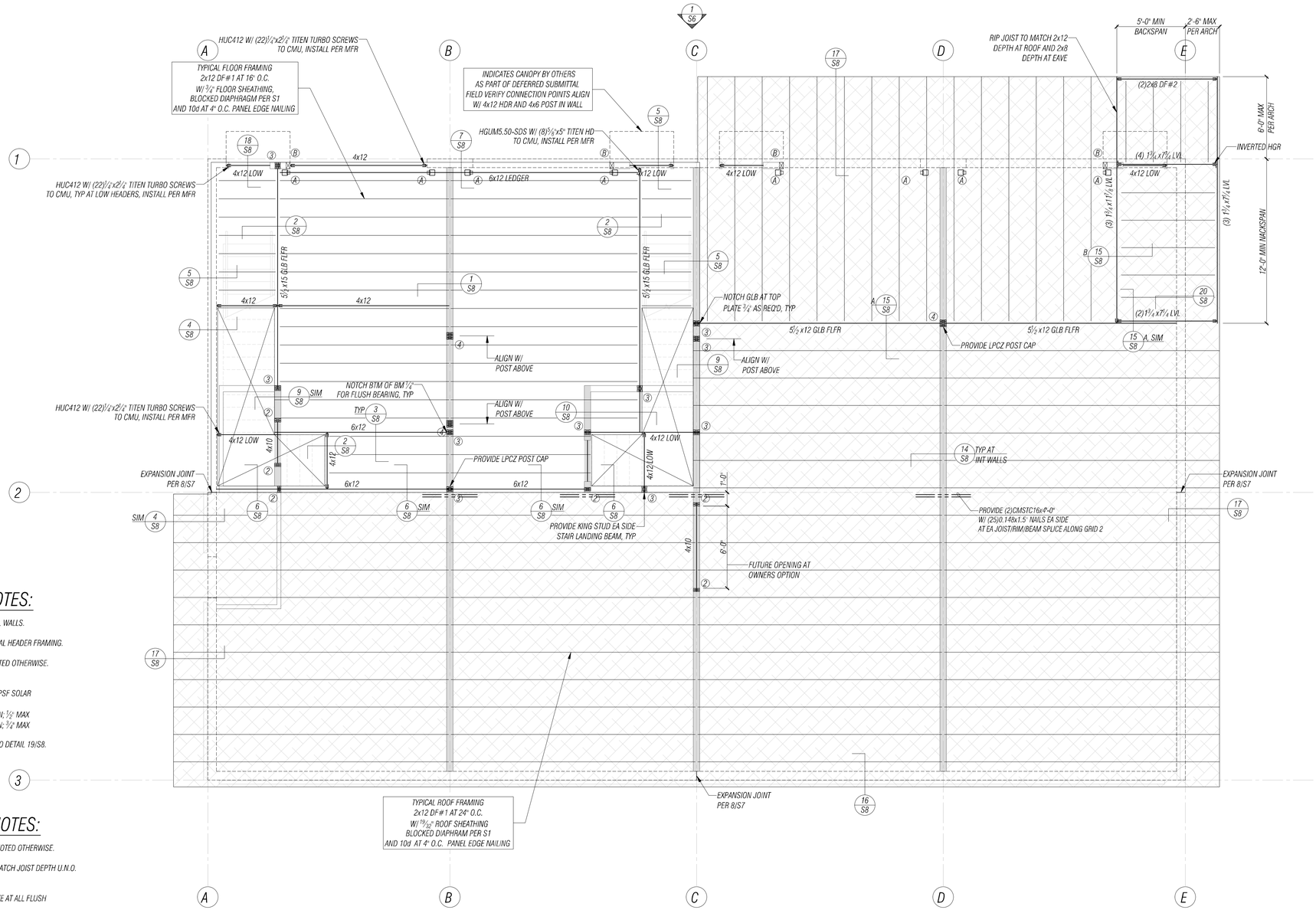

ROOF FRAMING NOTES:

1. STUD SPACING IS 16" O.C. FOR ALL WALLS.
2. REFER TO DETAIL 20/S7 FOR TYPICAL HEADER FRAMING.
3. ALL HEADERS ARE 4x6 UNLESS NOTED OTHERWISE.
4. ROOF JOIST DESIGN LOADS:
   DEAD LOAD - 12 PSF + 5 PSF SOLAR
   LIVE LOAD - 25 PSF
   LL DEFLECTION - L/360 MIN; ½" MAX
   TL DEFLECTION - L/240 MIN; ¾" MAX
5. FOR SISTERED MEMBERS REFER TO DETAIL 19/S8.

FLOOR FRAMING NOTES:

1. ALL HEADERS TO BE 4x6 UNLESS NOTED OTHERWISE.
2. ALL LVL AND PSL BEAMS ARE TO MATCH JOIST DEPTH U.N.O. AND ARE FLUSH FRAMED.
3. PROVIDE A35 FROM BEAM TO PLATE AT ALL FLUSH BEAM BEARING LOCATIONS.
4. REFER TO DETAIL 20/S7 FOR TYPICAL HEADER FRAMING.
5. STUD SPACING TO BE 16" O.C.
6. REFER TO SHEET S5-S5.1 FOR SHEARWALL REQUIREMENTS AND HOLDOWN LOCATIONS.
7. (3) INDICATES NUMBER OF 2x BRG STUDS.
8. PROVIDE SOLID BLOCKING IN FLOOR SPACE BELOW ALL 4x, 6x AND MULTI-STUD POSTS THAT DO NOT BEAR ON FLUSH BEAMS.
9. REFER TO DETAIL 16/S7 FOR TYPICAL STAIR FRAMING REQUIREMENTS.
10. FOR SISTERED MEMBERS REFER TO DETAIL 19/S8.

1/S3 SECOND FLOOR AND LOW ROOF FRAMING PLAN

SCALE 1/4" = 1'-0"

HANGER SCHEDULE

MEMBER	HANGER	REMARK
2x	LUS SERIES	---
(2)2x	HU(C) SERIES	---
4x	LUS SERIES	---
(2) 1¾"LVL	HU(C) SERIES	---
(3) 1¾"LVL	HU(C) SERIES	SHIM AS REQ'D
(4) 1¾"LVL	HU(C) SERIES	SHIM AS REQ'D

*HANGER SIZE TO MATCH JOIST/BEAM DEPTH

POST SCHEDULE

MARK	SIZE
A	HSS 5"SQx¼"
B	4x6

NO.	DATE	BY	REVISION

ANY INFORMATION OR DATA ON THIS DRAWING IS NOT INTENDED TO BE SUITABLE FOR REUSE BY ANY PERSON, FIRM, CORPORATION, OR ANY OTHERS ON EXTENSIONS OF THIS PROJECT OR FOR ANY USE ON ANY OTHER PROJECT. ANY REUSE WITHOUT WRITTEN VERIFICATION AND ADAPTATION BY THE ENGINEER FOR THE SPECIFIC PURPOSE INTENDED WILL BE AT THE USER'S SOLE RISK AND WITHOUT LIABILITY OR LEGAL EXPOSURE TO THE ENGINEER.

FACET
2210 Riverside Dr, Suite #110
Mount Vernon, WA 98273
P: 360.899.1110
www.facetnw.com
FEDERAL WAY | KIRKLAND | MOUNT VERNON | SEATTLE | SPOKANE | WHIDBEY ISLAND

JONATHAN M. HARRISON
STATE OF WASHINGTON
46132
10/17/2024
STRUCTURAL ENGINEER
PROFESSIONAL ENGINEER

PUYALLUP STORAGE BUILDING

111 5HT ST SE
PUYALLUP, WA 98372
PROJECT NUMBER: 2401.0362

PERMIT SUBMITTAL

SECOND FLOOR AND LOW ROOF FRAMING PLAN

DATE: 10/17/2024

PLAN NUMBER: S3

FILE LOCATION: Z:\SHARED\PROJECTS\ACTIVE\2024\01\2401.0362 1ST LMP - PUYALLUP STORAGE BLDG\DRAWINGS\CAD\ACTIVE\PUYALLUP STRG BLDG_S3-4.DWG - ORIGINAL SHEET SIZE: ARCH FULL BLEED D (24.00 X 36.00 INCHES) - LAST MODIFIED BY: JOEL HARKNESS
PRINCIPAL: JJ PROJECT MANAGER: SDT DESIGNED BY: LO, SDT DRAWN BY: JH CHECKED BY: JJ

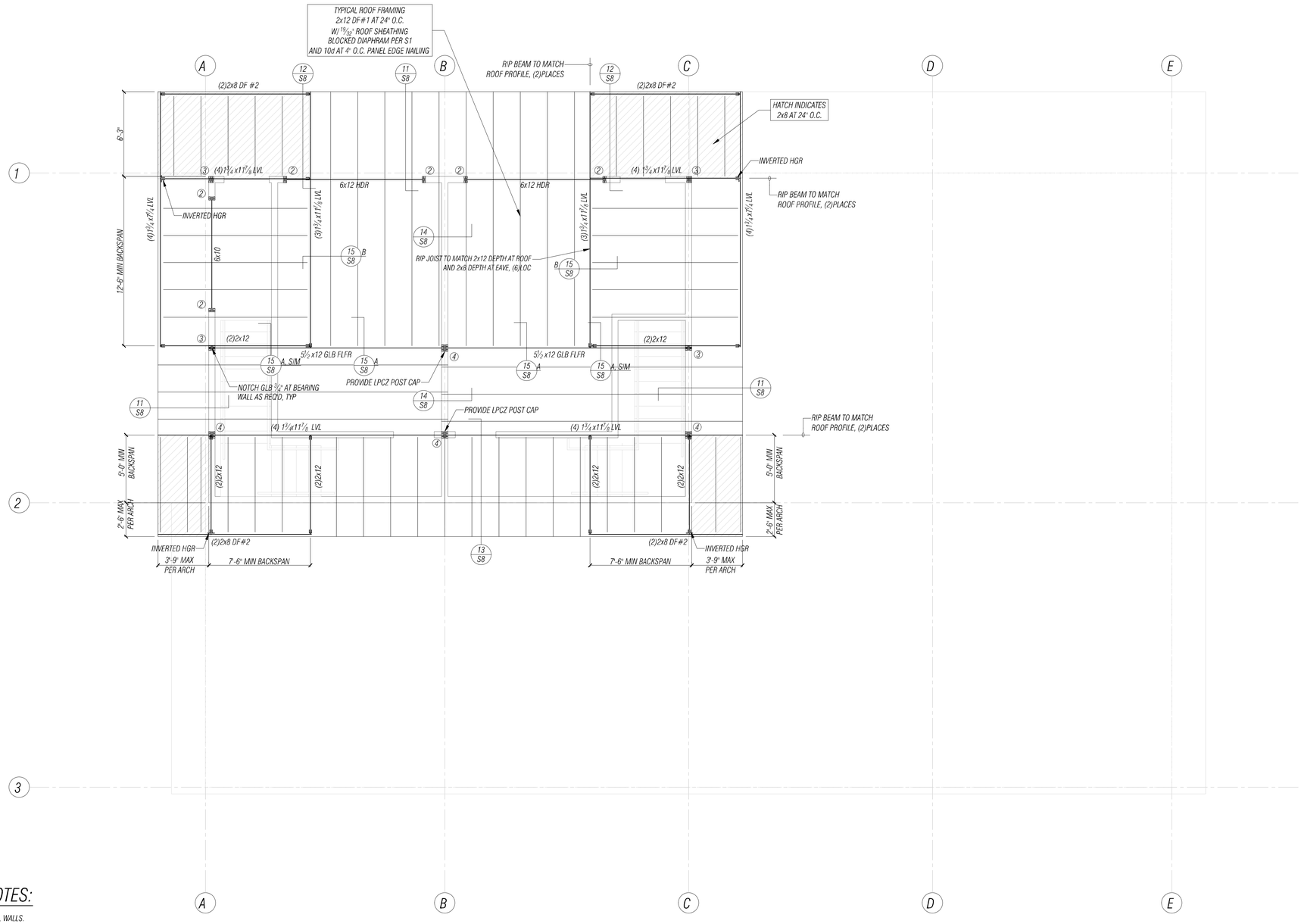

ROOF FRAMING NOTES:

1. STUD SPACING IS 16" O.C. FOR ALL WALLS.
2. REFER TO DETAIL 20/S7 FOR TYPICAL HEADER FRAMING.
3. ALL HEADERS ARE 4x6 UNLESS NOTED OTHERWISE.
4. ROOF JOIST DESIGN LOADS:
   DEAD LOAD - 12 PSF + 5 PSF SOLAR
   LIVE LOAD - 25 PSF
   LL DEFLECTION - L/360 MIN; ½" MAX
   TL DEFLECTION - L/240 MIN; ¾" MAX
5. FOR SISTERED MEMBERS REFER TO DETAIL 19/S8.

1/S4 ROOF FRAMING PLAN

SCALE 1/4" = 1'-0"

HANGER SCHEDULE

MEMBER	HANGER	REMARK
2x	LUS SERIES	---
(2)2x	HU(C) SERIES	---
4x	LUS SERIES	---
(2) 1¾ LVL	HU(C) SERIES	---
(3) 1¾ LVL	HU(C) SERIES	SHIM AS REQ'D
(4) 1¾ LVL	HU(C) SERIES	SHIM AS REQ'D

*HANGER SIZE TO MATCH JOIST/BEAM DEPTH

POST SCHEDULE

MARK	SIZE
A	HSS 5"SQx¼"
B	4x6

NO.	DATE	BY	REVISION

ANY INFORMATION OR DATA ON THIS DRAWING IS NOT INTENDED TO BE SUITABLE FOR REUSE BY ANY PERSON, FIRM, CORPORATION, OR ANY OTHERS ON EXTENSIONS OF THIS PROJECT OR FOR ANY USE ON ANY OTHER PROJECT. ANY REUSE WITHOUT WRITTEN VERIFICATION AND ADAPTATION BY THE ENGINEER FOR THE SPECIFIC PURPOSE INTENDED WILL BE AT THE USER'S SOLE RISK AND WITHOUT LIABILITY OR LEGAL EXPOSURE TO THE ENGINEER.

FACET
P: 360.899.1110
www.facetnw.com
2210 Riverside Dr, Suite #110
Mount Vernon, WA 98273
FEDERAL WAY | KIRKLAND | MOUNT VERNON | SEATTLE | SPOKANE | WHIDBEY ISLAND

JONATHAN M. HARRISON
STATE OF WASHINGTON
46132
10/17/2024
STRUCTURAL ENGINEER
PROFESSIONAL ENGINEER

PUYALLUP STORAGE BUILDING

111 5HT ST SE
PUYALLUP, WA 98372
PROJECT NUMBER: 2401.0362

PERMIT SUBMITTAL

ROOF FRAMING PLAN

DATE: 10/17/2024

PLAN NUMBER:

S4

FILE LOCATION: Z:\SHARED\PROJECTS\ACTIVE\2024\0724\1.03\B2-1ST UP - PUYALLUP STORAGE BLDG\DRAWINGS\CAD\ACTIVEFILES\PUYALLUP STRG BLDG_S3-4.DWG - ORIGINAL SHEET SIZE: ARCH FULL BLEED D (24.00 X 36.00 INCHES) - LAST MODIFIED BY: JOEL HARKNESS
PRINCIPAL: JJ PROJECT MANAGER: SDT DESIGNED BY: LO, SDT DRAWN BY: JH CHECKED BY: JJ

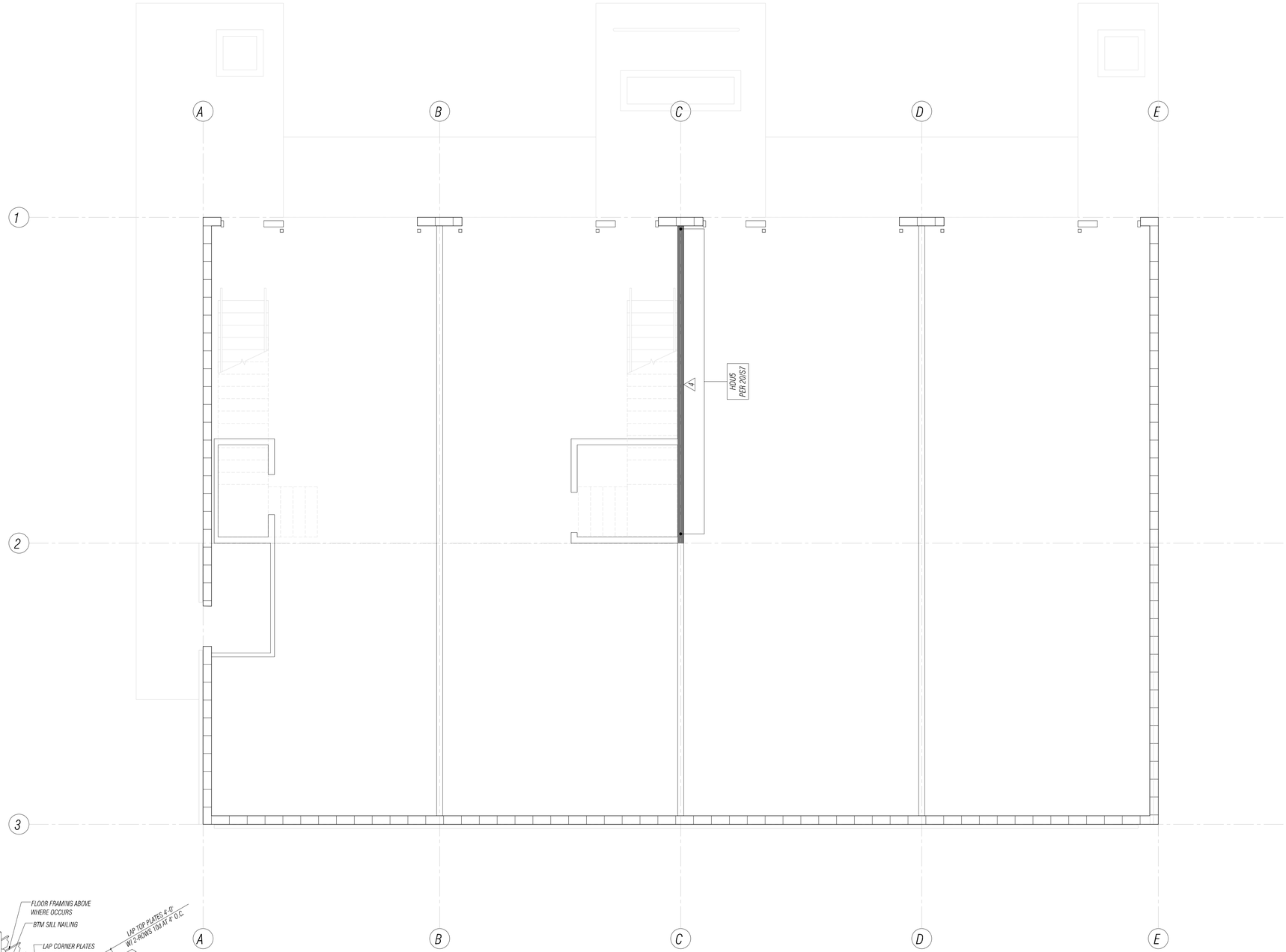

1 / S5 FIRST FLOOR SHEARWALL PLAN

SCALE 1/4" = 1'-0"

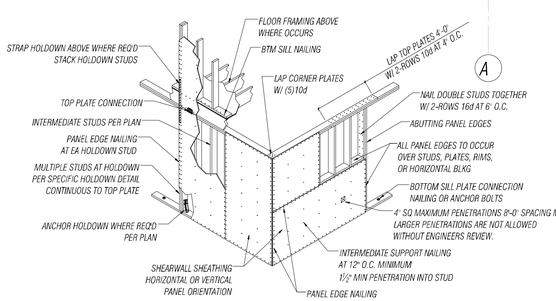

SW / S5 TYPICAL WOOD SHEARWALL FRAMING

SCALE N.T.S.

SHEARWALL NOTES:

1. INDICATES SHEARWALL ON SPECIFIED FLOOR. REFER TO SCHEDULE ON THIS SHEET FOR REQUIREMENTS.
2. SIMPSON MASAP SILL PLATE ANCHORS ARE AN ACCEPTABLE ALTERNATE TO ⅝"Ø ANCHOR BOLTS.
3. INDICARES CMU SHEARWALL. REINFORCEMENT PER S6.

SHEARWALL SCHEDULE

MARK	WOOD STRUCTURAL PANELS	PANEL EDGE NAILING	PANEL EDGE STUDS	PLATE CONNECTION: CONCRETE:SILL PLATE CONNECTION ⅝"Ø A. BOLT	PLATE CONNECTION: TOP PLATE	PLATE CONNECTION: WOOD FLOOR BTM SILL PLATE
6	15/32" SHEATHING ONE SIDE	10d AT 6" O.C.	2x	48" O.C. IN 2x PLATE	LTP4 AT 24" O.C.*	16d AT 6" O.C.
4	15/32" SHEATHING ONE SIDE	10d AT 4" O.C.	2-2x	32" O.C. IN 2x PLATE	LTP4 AT 16" O.C.	16d AT 6" O.C.

*LTP4 AT 24" O.C. AT ROOF

NO.	DATE	BY	REVISION

ANY INFORMATION OR DATA ON THIS DRAWING IS NOT INTENDED TO BE SUITABLE FOR REUSE BY ANY PERSON, FIRM, CORPORATION, OR ANY OTHERS ON EXTENSIONS OF THIS PROJECT OR FOR ANY USE ON ANY OTHER PROJECT. ANY REUSE WITHOUT WRITTEN VERIFICATION AND ADAPTATION BY THE ENGINEER FOR THE SPECIFIC PURPOSE INTENDED WILL BE AT THE USER'S SOLE RISK AND WITHOUT LIABILITY OR LEGAL EXPOSURE TO THE ENGINEER.

FACET
P: 360.899.1110
www.facetnw.com
2210 Riverside Dr,
Suite #110
Mount Vernon, WA 98273
FEDERAL WAY | KIRKLAND | MOUNT VERNON | SEATTLE | SPOKANE | WHIDBEY ISLAND

JOHNATHAN HARRISON
STATE OF WASHINGTON
46132
10/17/2024
STRUCTURAL ENGINEER
PROFESSIONAL ENGINEER

PUYALLUP STORAGE BUILDING

111 5HT ST SE
PUYALLUP, WA 98372
PROJECT NUMBER: 2401.0362

PERMIT SUBMITTAL

FIRST FLOOR SHEARWALL PLAN

DATE: 10/17/2024

PLAN NUMBER:

S5

FILE LOCATION: Z:\SHAREDPROJECTS\ACTIVE\2024\01\401.0362 1ST LMP - PUYALLUP STORAGE BLDG\DRAWINGS\CAD\ACTIVEFILES\PUYALLUP STRG BLDG_S5.DWG - ORIGINAL SHEET SIZE: ARCH FULL BLEED D (24.00 X 36.00 INCHES) - LAST MODIFIED BY: JOEL HARKNESS
PRINCIPAL: JJ PROJECT MANAGER: SDT DESIGNED BY: LO, SDT DRAWN BY: JH CHECKED BY: JJ

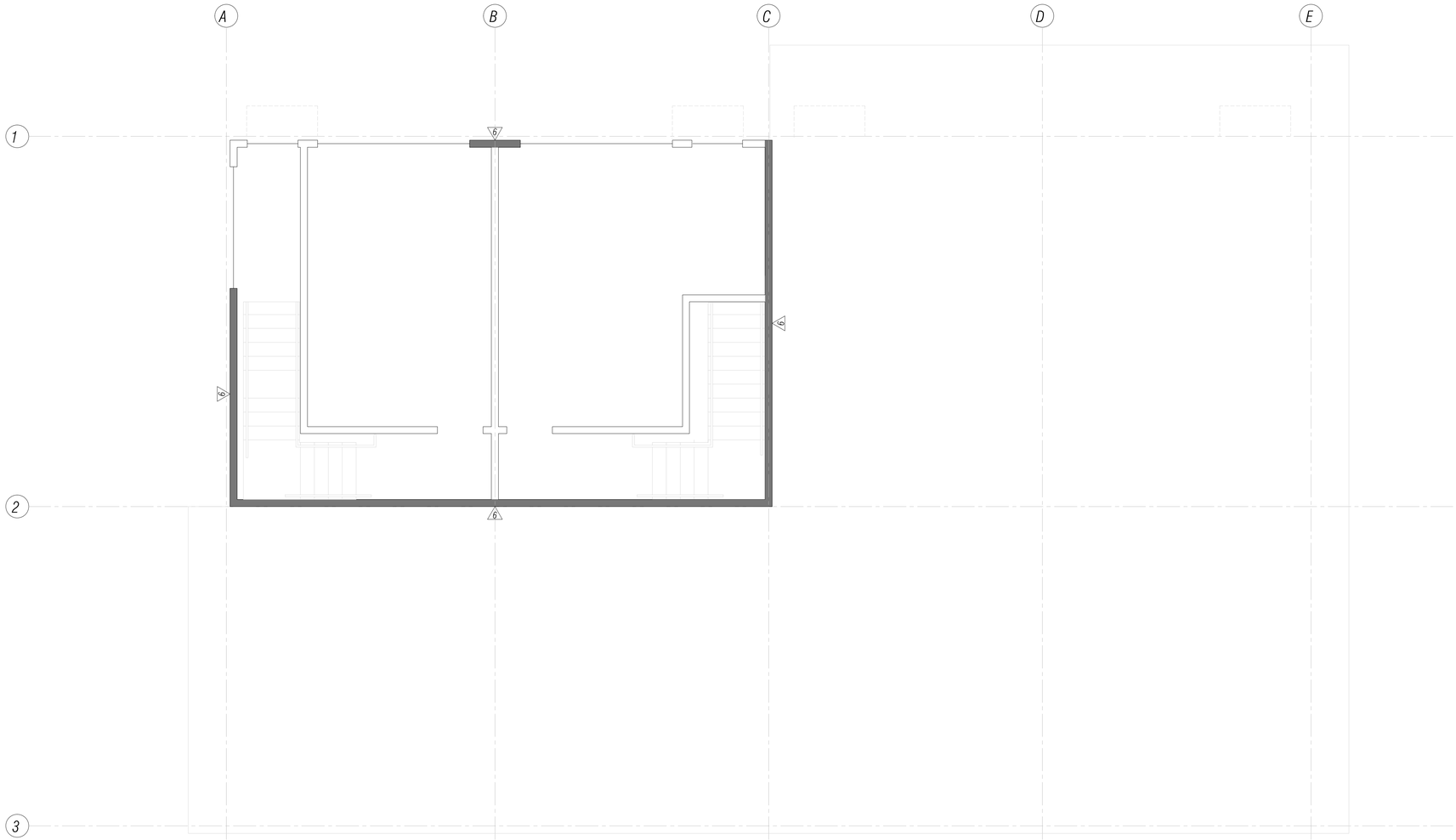

1 S5.1 SECOND FLOOR SHEARWALL PLAN

SCALE 1/4" = 1'-0"

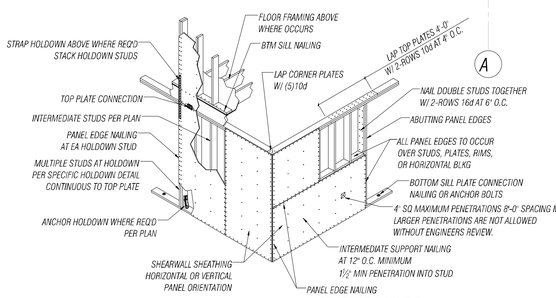

SW S5.1 TYPICAL WOOD SHEARWALL FRAMING

SCALE N.T.S.

SHEARWALL NOTES:

1. INDICATES SHEARWALL ON SPECIFIED FLOOR. REFER TO SCHEDULE ON THIS SHEET FOR REQUIREMENTS.
2. SIMPSON MASAP SILL PLATE ANCHORS ARE AN ACCEPTABLE ALTERNATE TO ⅝"Ø ANCHOR BOLTS.
3. INDICARES CMU SHEARWALL. REINFORCEMENT PER S6.

SHEARWALL SCHEDULE

MARK	WOOD STRUCTURAL PANELS	PANEL EDGE NAILING	PANEL EDGE STUDS	PLATE CONNECTION		
				CONCRETE:SILL PLATE CONNECTION ⅝"Ø A. BOLT	TOP PLATE	WOOD FLOOR BTM SILL PLATE
6	15/32" SHEATHING ONE SIDE	10d AT 6" O.C.	2x	48" O.C. IN 2x PLATE	LTP4 AT 24" O.C.*	16d AT 6" O.C.
4	15/32" SHEATHING ONE SIDE	10d AT 4" O.C.	2-2x	32" O.C. IN 2x PLATE	LTP4 AT 16" O.C.	16d AT 6" O.C.

*LTP4 AT 24" O.C. AT ROOF

NO.	DATE	BY	REVISION

ANY INFORMATION OR DATA ON THIS DRAWING IS NOT INTENDED TO BE SUITABLE FOR REUSE BY ANY PERSON, FIRM, CORPORATION, OR ANY OTHERS ON EXTENSIONS OF THIS PROJECT OR FOR ANY USE ON ANY OTHER PROJECT. ANY REUSE WITHOUT WRITTEN VERIFICATION AND ADAPTATION BY THE ENGINEER FOR THE SPECIFIC PURPOSE INTENDED WILL BE AT THE USER'S SOLE RISK AND WITHOUT LIABILITY OR LEGAL EXPOSURE TO THE ENGINEER.

FACET
2210 Riverside Dr,
Suite #110
Mount Vernon, WA 98273
P: 360.899.1110
www.facetnw.com
FEDERAL WAY | KIRKLAND | MOUNT VERNON | SEATTLE | SPOKANE | WHIDBEY ISLAND

JORDAN M. JANICKI
STATE OF WASHINGTON
46132
10/17/2024
STRUCTURAL ENGINEER
PROFESSIONAL ENGINEER

PUYALLUP STORAGE BUILDING

111 5HT ST SE
PUYALLUP, WA 98372
PROJECT NUMBER: 2401.0362

PERMIT SUBMITTAL

SECOND FLOOR SHEARWALL PLAN

DATE: 10/17/2024

PLAN NUMBER:

S5.1

FILE LOCATION: Z:\SHAREDPROJECTS\ACTIVE\2024\01\401.0362 1ST LMP - PUYALLUP STORAGE BLDG\DRAWINGS\CAD\ACTIVEFILES\PUYALLUP STRG BLDG_S5.DWG - ORIGINAL SHEET SIZE: ARCH FULL BLEED D (24.00 X 36.00 INCHES) - LAST MODIFIED BY: JOEL HARKNESS
PRINCIPAL: JJ PROJECT MANAGER: SDT DESIGNED BY: LO, SDT DRAWN BY: JH CHECKED BY: JJ

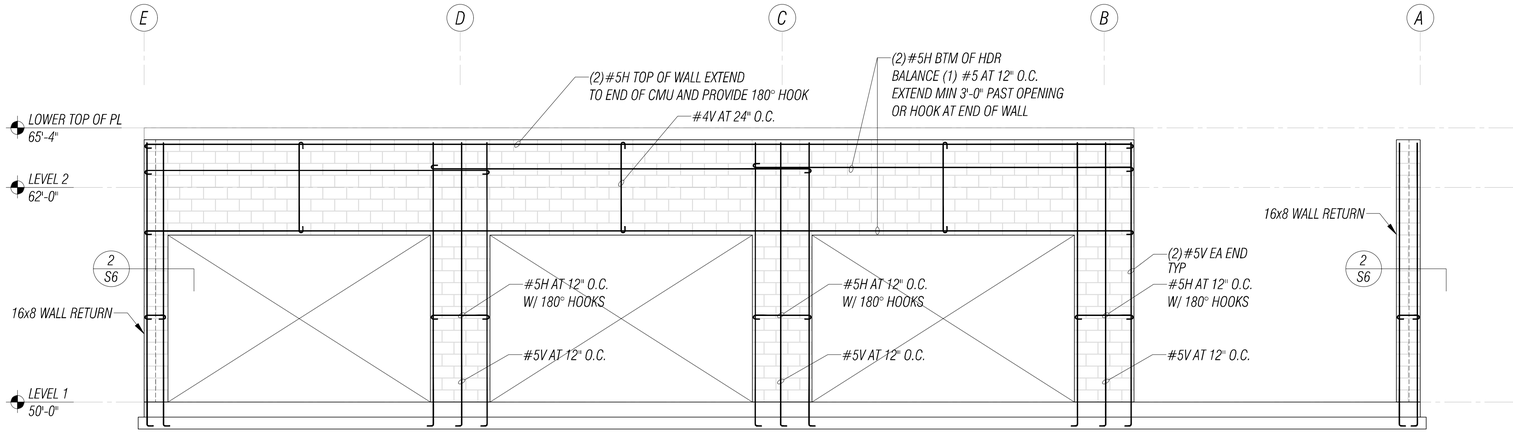

1/S6 NORTH CMU WALL ELEVATION

SCALE 1/4" = 1'-0"

CMU REINFORCEMENT LAP SCHEDULE	
#4	2'-0"
#5	3'-0"

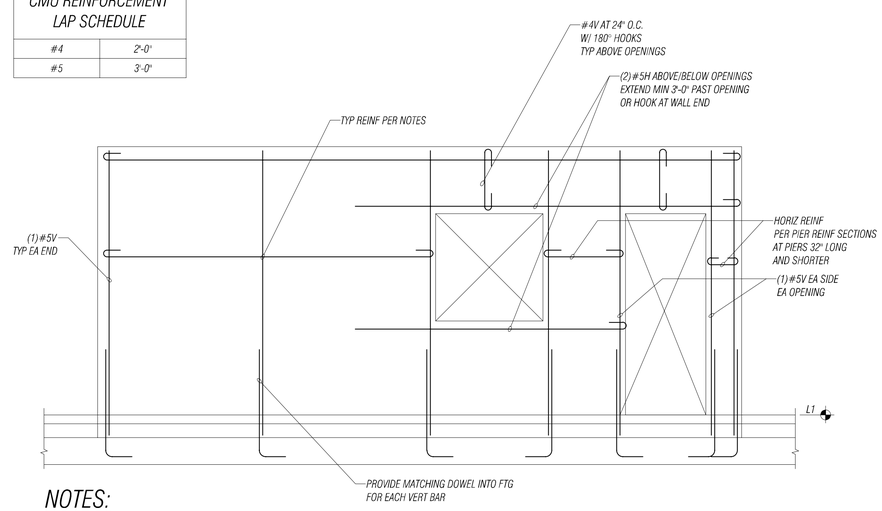

NOTES:

1. REFER TO ARCHITECTURAL PLANS FOR WINDOW/OPENING SIZES AND LOCATIONS.
2. ALL CMU BLOCKS ARE TO BE 8", UNO.
3. CMU BLOCKS ARE TO BE PLACED IN HORIZONTAL RUNNING BOND COURSES AND ARE TO HAVE CONCAVE MORTAR JOINTS.
4. TOLERANCES FOR CMU PLACEMENT ARE AS FOLLOWS:
   - VARIATION FROM PLANE OF WALL: ½" MAX IN 10FT AND ½" MAX IN 20FT OR MORE.
   - VARIATION FROM PLUMB: ¼" MAX PER STORY.
   - VARIATION FROM LEVEL COURSING: ⅛" MAX IN 3FT, ¼" MAX IN 10FT AND ½" MAX IN 30FT.
5. SOLID GROUT ALL CELLS
6. ALL HORIZONTAL REINFORCING IS TO END IN 180° HOOKS WHICH ARE HOOKED AROUND THE OUTERMOST VERTICAL BAR. AT PERPENDICULAR WALL INTERSECTIONS, CORNER REINFORCING MAY BE USED IN LIEU OF 180° HOOKS.
7. ALL VERTICAL SPANDRAL REINFORCING TO HAVE 180° HOOKS EA END.
8. REFER TO PLAN FOR TYPICAL CMU REINF SPACING. MAXIMUM REINFORCING SPACING TO BE #5 AT 48" O.C. EA WAY.
9. COORDINATE MECHANICAL BLOCKOUT SIZES AND LOCATIONS WITH MECHANICAL DRAWINGS.

2/S6 TYPICAL CMU WALL REINFORCING

SCALE 3/8" = 1'-0"

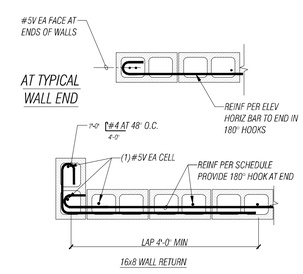

NO.	DATE	BY	REVISION

ANY INFORMATION OR DATA ON THIS DRAWING IS NOT INTENDED TO BE SUITABLE FOR REUSE BY ANY PERSON, FIRM, CORPORATION, OR ANY OTHERS ON EXTENSIONS OF THIS PROJECT OR FOR ANY USE ON ANY OTHER PROJECT. ANY REUSE WITHOUT WRITTEN VERIFICATION AND ADAPTATION BY THE ENGINEER FOR THE SPECIFIC PURPOSE INTENDED WILL BE AT THE USER'S SOLE RISK AND WITHOUT LIABILITY OR LEGAL EXPOSURE TO THE ENGINEER.

FACET
P: 360.899.1110
www.facetnw.com
2210 Riverside Dr,
Suite #110
Mount Vernon, WA 98273
FEDERAL WAY | KIRKLAND | MOUNT VERNON | SEATTLE | SPOKANE | WHIDBEY ISLAND

JONATHAN M. JANICKI
STATE OF WASHINGTON
46132
STRUCTURAL ENGINEER
PROFESSIONAL ENGINEER
10/17/2024

PUYALLUP STORAGE BUILDING

111 5HT ST SE
PUYALLUP, WA 98372
PROJECT NUMBER: 2401.0362

PERMIT SUBMITTAL

CMU ELEVATION

DATE: 10/17/2024

PLAN NUMBER:

S6

FILE LOCATION: Z:\SHARED\PROJECTS\ACTIVE\2024\01\2401.0362 1ST LMP - PUYALLUP STORAGE BLDG\DRAWINGS\CAD\ACTIVEFILE\PUYALLUP STRG BLDG_S6.DWG - ORIGINAL SHEET SIZE: ARCH FULL BLEED D (24.00 X 36.00 INCHES) - LAST MODIFIED BY: JOEL HARKNESS
PRINCIPAL: JJ PROJECT MANAGER: SDT DESIGNED BY: LO, SDT DRAWN BY: JH CHECKED BY: JJ

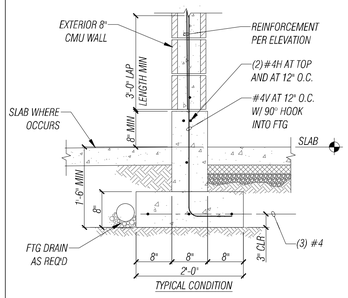

1 S7 FOUNDATION SECTION

SCALE 3/4" = 1'-0"

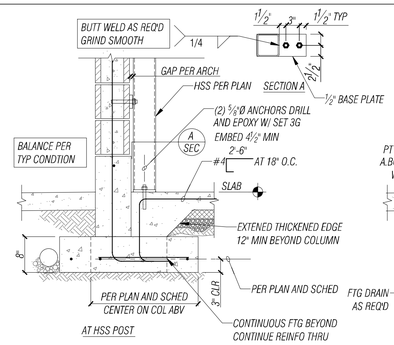

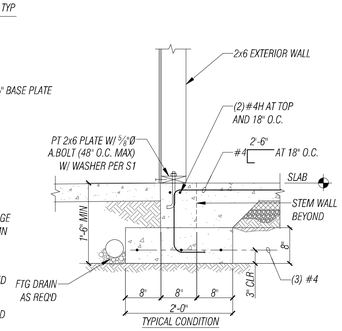

3 S7 FOUNDATION SECTION

SCALE 3/4" = 1'-0"

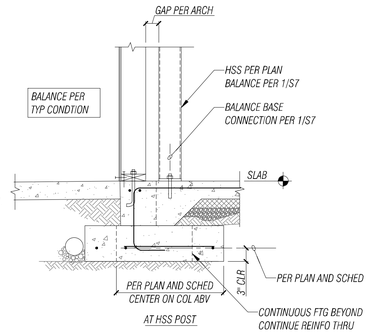

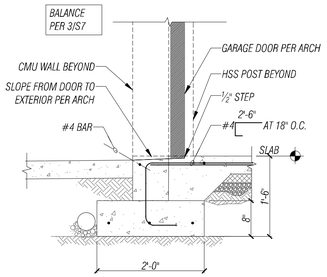

4 S7 FOUNDATION SECTION

SCALE 3/4" = 1'-0"

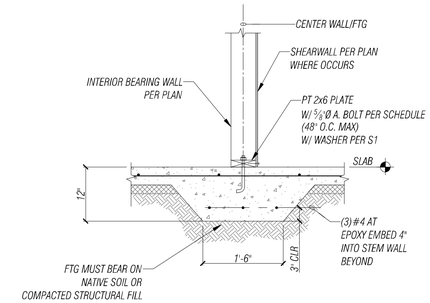

5 S7 FOUNDATION SECTION

SCALE 3/4" = 1'-0"

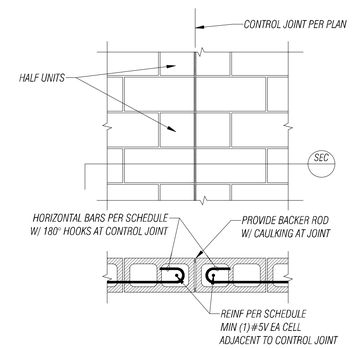

8 S7 CMU DETAIL

SCALE 3/4" = 1'-0"

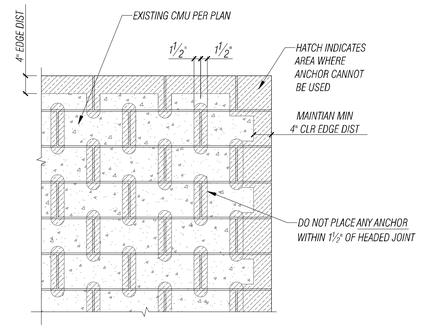

9 S7 CMU DETAIL

SCALE 3/4" = 1'-0"

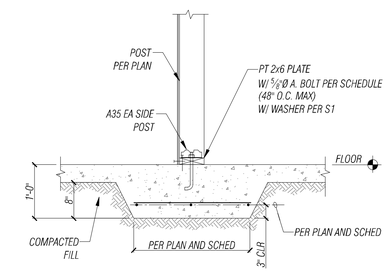

10 S7 FOUNDATION SECTION

SCALE 3/4" = 1'-0"

STAIR STRINGER SCHEDULE	
STRINGER & SPACING	MAXIMUM RUN
2x12 DF#2 AT 16" O.C.	7'-0"
2x12 DF#2 AT 12" O.C.	9'-0"
2x12 DF#2 AT 16" O.C. W/ 2x6 DBLR	10'-6"
1¾x11⅞ LVL AT 12" O.C.	12'-0"
1¾x14 LVL AT 16" O.C.	14'-0"

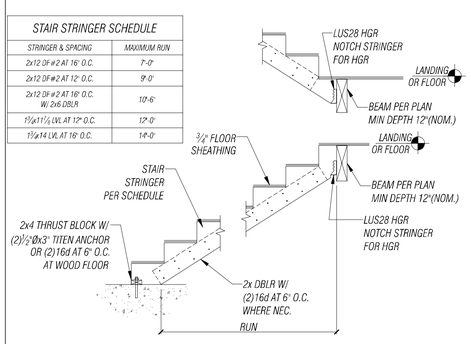

16 S7 TYP STAIR DETAIL

SCALE 1/2" = 1'-0"

ANCHOR BOLT SCHEDULE

HOLDOWN ANCHOR	BOLT DIA	No. KING STUDS
HDU5	⅝"Ø	(2)2x6

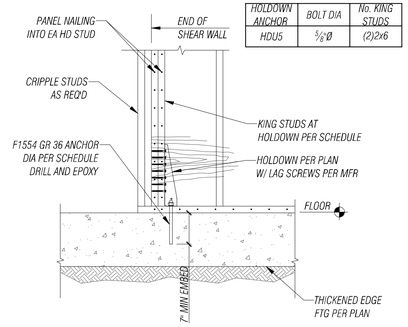

18 S7 TYP DRILL AND EPOXY HDU DETAIL

SCALE 3/4" = 1'-0"

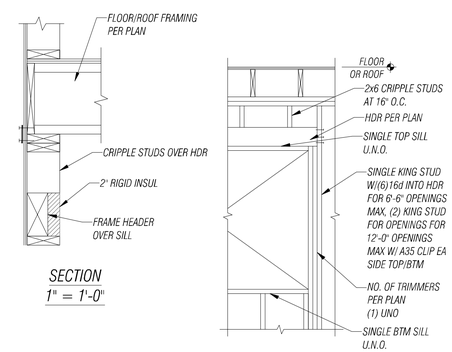

20 S7 TYP HEADER DETAIL

SCALE 1/2" = 1'-0"

NO.	DATE	BY	REVISION

ANY INFORMATION OR DATA ON THIS DRAWING IS NOT INTENDED TO BE SUITABLE FOR REUSE BY ANY PERSON, FIRM, CORPORATION, OR ANY OTHERS ON EXTENSIONS OF THIS PROJECT OR FOR ANY USE ON ANY OTHER PROJECT. ANY REUSE WITHOUT WRITTEN VERIFICATION AND ADAPTATION BY THE ENGINEER FOR THE SPECIFIC PURPOSE INTENDED WILL BE AT THE USER'S SOLE RISK AND WITHOUT LIABILITY OR LEGAL EXPOSURE TO THE ENGINEER.

FACET
P: 360.899.1110
www.facetnw.com
2210 Riverside Dr, Suite #110
Mount Vernon, WA 98273
FEDERAL WAY | KIRKLAND | MOUNT VERNON | SEATTLE | SPOKANE | WHIDBEY ISLAND

JONATHAN M. JAMES STATE OF WASHINGTON 46132 STRUCTURAL ENGINEER PROFESSIONAL ENGINEER
10/17/2024

PUYALLUP STORAGE BUILDING

111 5HT ST SE
PUYALLUP, WA 98372
PROJECT NUMBER: 2401.0362

PERMIT SUBMITTAL

FOUNDATION, CMU, AND SHEARWALL DETAILS

DATE: 10/17/2024

PLAN NUMBER:

S7

FILE LOCATION: Z:\SHARED\PROJECTS\ACTIVE\2024\01\2401.0362 1ST LMP - PUYALLUP STORAGE BLDG\DRAWINGS\CAD\ACTIVEFILE\PUYALLUP STRG BLDG_S7.DWG - ORIGINAL SHEET SIZE: ARCH FULL BLEED D (24.00 X 36.00 INCHES) - LAST MODIFIED BY: JOEL HARKNESS
PRINCIPAL: JJ PROJECT MANAGER: SDT DESIGNED BY: LO, SDT DRAWN BY: JH CHECKED BY: JJ

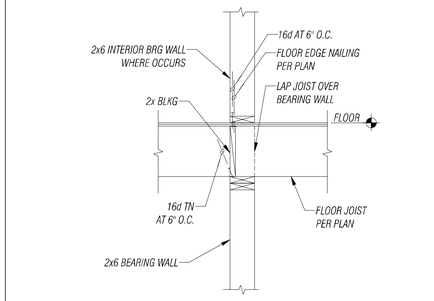

1 S8 FLOOR SECTION

SCALE 3/4" = 1'-0"

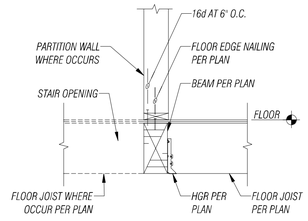

2 S8 FLOOR SECTION

SCALE 3/4" = 1'-0"

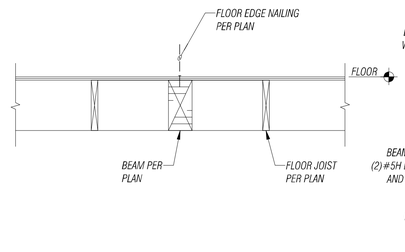

3 S8 FLOOR SECTION

SCALE 3/4" = 1'-0"

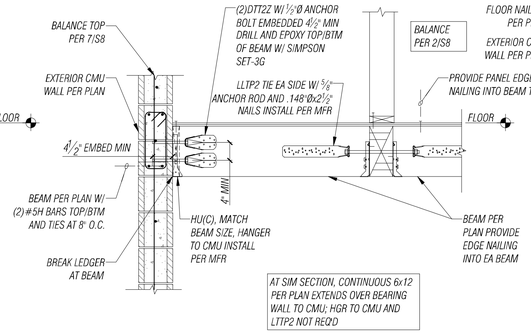

4 S8 FLOOR SECTION

SCALE 3/4" = 1'-0"

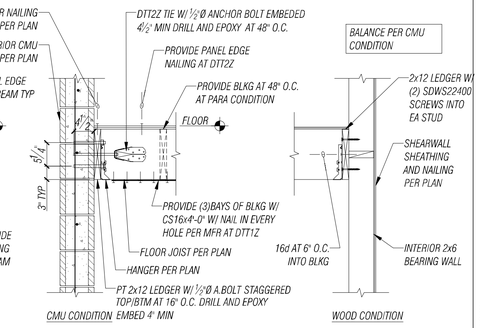

5 S8 FLOOR SECTION

SCALE 3/4" = 1'-0"

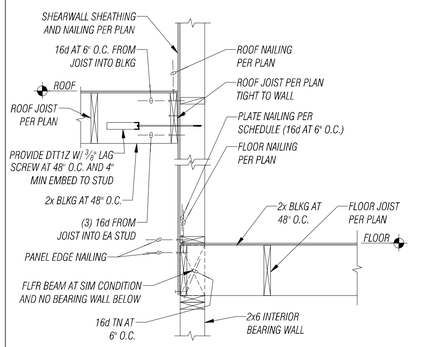

6 S8 FLOOR SECTION

SCALE 3/4" = 1'-0"

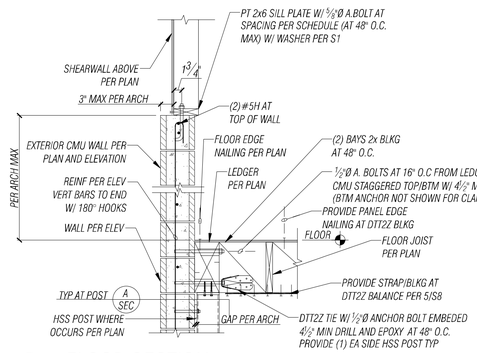

7 S8 FLOOR SECTION

SCALE 3/4" = 1'-0"

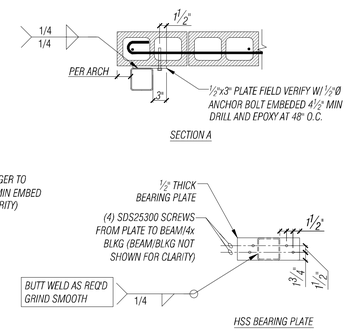

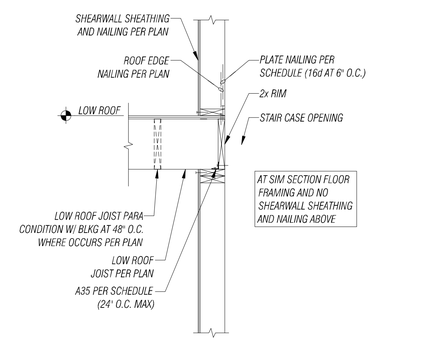

9 S8 FLOOR SECTION

SCALE 3/4" = 1'-0"

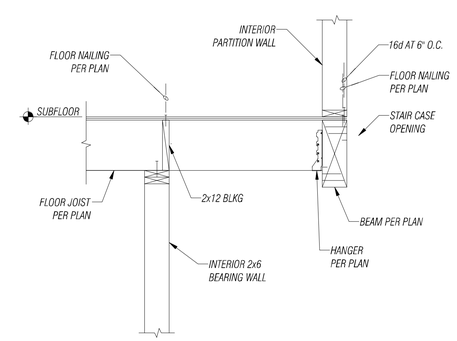

10 S8 FLOOR SECTION

SCALE 3/4" = 1'-0"

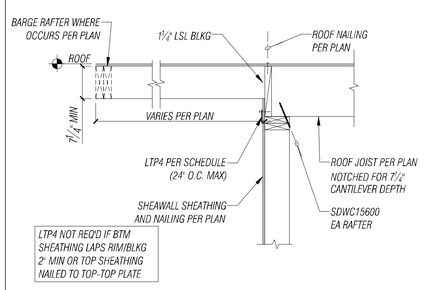

11 S8 ROOF SECTION

SCALE 3/4" = 1'-0"

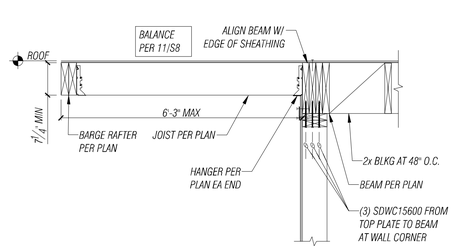

12 S8 ROOF SECTION

SCALE 3/4" = 1'-0"

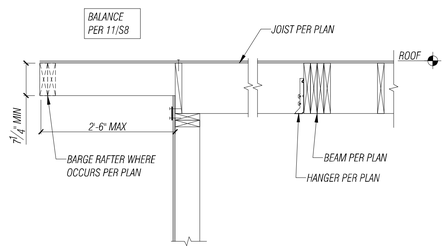

13 S8 ROOF SECTION

SCALE 3/4" = 1'-0"

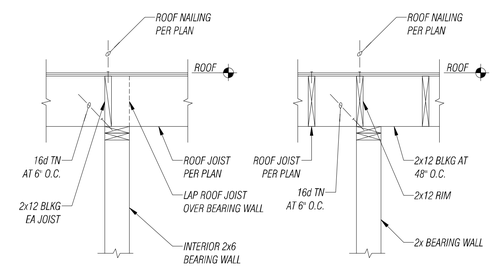

14 S8 ROOF SECTION

SCALE 3/4" = 1'-0"

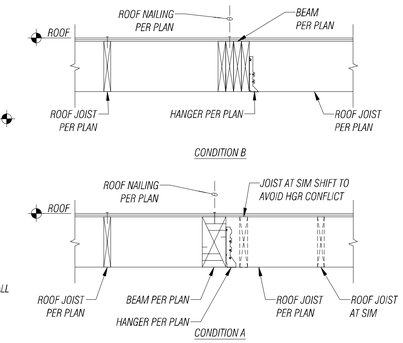

15 S8 ROOF SECTION

SCALE 1/2" = 1'-0"

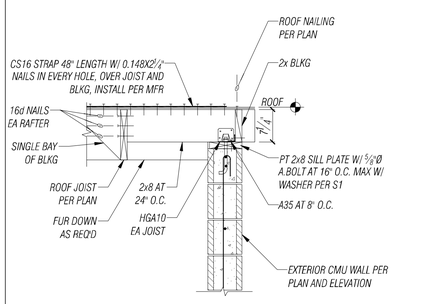

16 S8 ROOF SECTION

SCALE 3/4" = 1'-0"

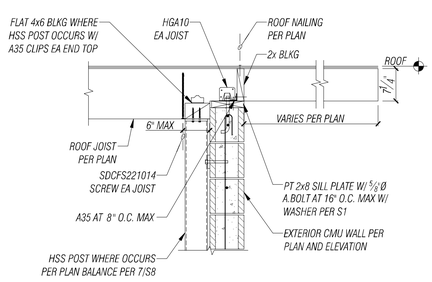

17 S8 ROOF SECTION

SCALE 3/4" = 1'-0"

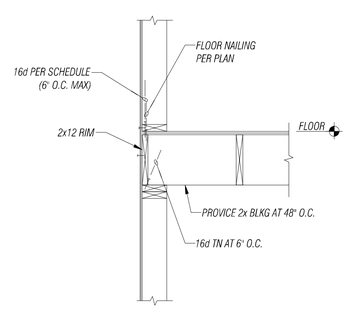

18 S8 FLOOR SECTION

SCALE 3/4" = 1'-0"

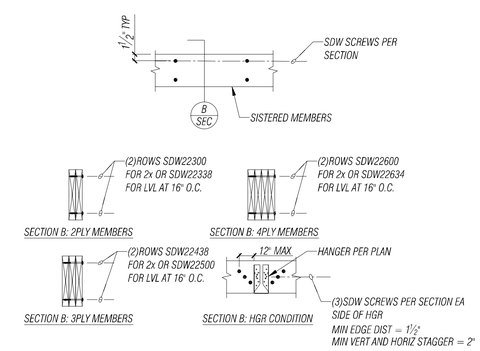

19 S8 SISTERED MEMBER DETAIL

SCALE 3/4" = 1'-0"

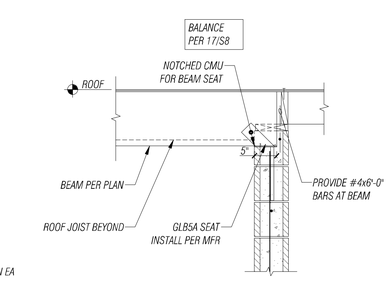

20 S8 TYP HEADER DETAIL

SCALE 1/2" = 1'-0"

NO.	DATE	BY	REVISION

ANY INFORMATION OR DATA ON THIS DRAWING IS NOT INTENDED TO BE SUITABLE FOR REUSE BY ANY PERSON, FIRM, CORPORATION, OR ANY OTHERS ON EXTENSIONS OF THIS PROJECT OR FOR ANY USE ON ANY OTHER PROJECT. ANY REUSE WITHOUT WRITTEN VERIFICATION AND ADAPTATION BY THE ENGINEER FOR THE SPECIFIC PURPOSE INTENDED WILL BE AT THE USER'S SOLE RISK AND WITHOUT LIABILITY OR LEGAL EXPOSURE TO THE ENGINEER.

FACET
P: 360.899.1110
www.facetnw.com
2210 Riverside Dr, Suite #110
Mount Vernon, WA 98273
FEDERAL WAY | KIRKLAND | MOUNT VERNON | SEATTLE | SPOKANE | WHIDBEY ISLAND

JONATHAN M. HARRISON
STATE OF WASHINGTON
46132
10/17/2024
STRUCTURAL ENGINEER
PROFESSIONAL ENGINEER

PUYALLUP STORAGE BUILDING

111 5HT ST SE
PUYALLUP, WA 98372
PROJECT NUMBER: 2401.0362

PERMIT SUBMITTAL

FRAMING DETAILS

DATE: 10/17/2024

PLAN NUMBER:

S8

FILE LOCATION: Z:\SHAREDPROJECTS\ACTIVE\2024\01\401.0362 1ST LMP - PUYALLUP STORAGE BLDG\DRAWINGS\CAD\ACTIVEFILES\PUYALLUP STRG BLDG_S8.DWG - ORIGINAL SHEET SIZE: ARCH FULL BLEED D (24.00 X 36.00 INCHES) - LAST MODIFIED BY: JOEL HARKNESS
PRINCIPAL: JJ PROJECT MANAGER: SDT DESIGNED BY: LO, SDT DRAWN BY: JH CHECKED BY: JJ

GENERAL HVAC NOTES

1 . MECHANICAL DESIGN, INSTALLATION & COORDINATION SHALL COMPLY WITH THE FOLLOWING CODES:
   2021 INTERNATIONAL BUILDING CODE (IBC)
   2021 INTERNATIONAL EXISTING BUILDING CODE
   2021 INTERNATIONAL MECHANICAL CODE (IMC)
   2021 WASHINGTON STATE ENERGY CODE (WSEC)
   2021 WASHINGTON STATE AMENDMENTS
2. THE FOLLOWING NOTES APPLY TO ALL MECHANICAL DRAWINGS. ADDITIONAL MECHANICAL NOTES MAY BE INDICATED ON EACH MECHANICAL DRAWING.
3. DO NOT SCALE OFF OF MECHANICAL DRAWINGS. CONSULT ARCHITECTURAL PLANS FOR LAYOUT AND DIMENSIONS.
4. REFER TO ARCHITECTURAL AND STRUCTURAL DRAWINGS FOR GENERAL CONSTRUCTION INCLUDING HEAT PUMP LOCATIONS, CONCRETE EQUIPMENT PADS, FLASHING DETAILS, ETC.
5. REFER TO ARCHITECTURAL DRAWING FOR ELEVATIONS. LOCATE MECHANICAL DEVICES SUCH AS SO THAT THEY DO NOT CONFLICT WITH GENERAL CONSTRUCTION NOR WITH ELECTRICAL SYSTEM.
6. MECHANICAL DRAWINGS SHOW APPROXIMATE LOCATIONS FOR GRILLS AND DIFFUSERS. FIELD COORDINATE ACTUAL LOCATIONS BY REFERRING TO ARCHITECTURAL DRAWINGS, REFLECTED CEILING PLANS, AND OTHER CEILING OR SURFACE MOUNTED DEVICES PLANS. INSTALL EQUIPMENT IN CONFORMANCE WITH ARCHITECTURAL FEATURES, OR WHERE INDICATED ON ARCHITECTURAL DRAWINGS. WHERE EQUIPMENT IS NOT INDICATED ON ARCHITECTURAL DRAWINGS, OBTAIN DIRECTION FROM ARCHITECT OR BUILDER PRIOR TO INSTALLATION.
7. COORDINATE LOCATIONS OF MECHANICAL EQUIPMENT AND DUCTWORK TO PROVIDE CLEARANCES OVER LIGHTING FIXTURES FOR REMOVAL AND SERVICE ACCESS DUE TO EQUIPMENT MAINTENANCE.
8. ARRANGE HVAC EQUIPMENT SO THAT ACCESS CLEARANCES INDICATED BY DRAWINGS, REQUIRED BY CODES, AND RECOMMENDED BY MANUFACTURER ARE PROVIDED.
9. WHERE NECESSARY, PROVIDE ACCESS PANELS/DOORS IN DUCTWORK AS INDICATED FOR INSPECTION AND MAINTENANCE FOR ALL EQUIPMENT, SMOKE/FIRE DAMPERS, AND OTHER EQUIPMENT.
10. GENERAL CONTRACTOR SHALL PROVIDE ACCESS TO FIRE AND/OR COMBINATION FIRE/SMOKE DAMPERS THROUGH ACCESS DOORS IN HARD CEILINGS AND WALLS. WHERE ACCESS DOORS PENETRATE FIRE RATED SYSTEMS THEY SHALL BE RATED IN ACCORDANCE WITH IBC REQUIREMENTS.
11. ELECTRICAL CHARACTERISTICS OF LISTED EQUIPMENT SHALL BE VERIFIED BY CONTRACTOR DURING SUBMITTAL PROCESS. ANY ELECTRICAL CHARACTERISTICS THAT DEVIATE FROM THOSE LISTED SHALL BE IDENTIFIED BY THE CONTRACTOR, SUBMITTED TO THE ENGINEER FOR APPROVAL AND COORDINATED WITH OTHER TRADES AS REQUIRED.
12. DRAWINGS ARE SCHEMATIC IN SOME AREAS AND MAY NOT SHOW OFFSETS WHICH MAY BE REQUIRED. PROVIDE OFFSETS AS REQUIRED AT NO ADDITIONAL COST.
13. DUCTS AND PIPES INDICATED WITHOUT DIMENSIONS SHALL BE SIZED PER PRECEDING UPSTREAM DUCT AND PIPE SECTIONS.
14. DUCTWORK SIZES SHOWN ARE CLEAR INSIDE DIMENSION.
15. WHERE A GIVEN SIZE OF ROUND DUCT IS NOT READILY AVAILABLE, THE NEXT LARGER READILY AVAILABLE SIZE IS ACCEPTABLE.
16. PROVIDE FABRICATED STEEL MEMBER SUPPORTS AS REQUIRED BY MANUFACTURER'S INSTALLATION INSTRUCTIONS, AS INDICATED ON DRAWINGS, OR IN SPECIFICATIONS FOR INSTALLATION OF EQUIPMENT. REQUIRED STRUCTURAL MEMBERS, BOLTS, AND WELDS SHALL BE IN ACCORDANCE WITH AMERICAN INSTITUTE OF STEEL CONSTRUCTION (AISC) MANUAL.
17. IF REQUIRED FOR INSTALLATION OF PIPES, DUCTS, AND EQUIPMENT, PROVIDE ADDITIONAL STRUCTURAL MEMBERS BETWEEN COLUMNS, JOISTS, AND STRUCTURAL FRAME TO MEET SUPPORT REACTIONS (FORCES, MOMENTS, AND DEFLECTIONS). STRUCTURAL MEMBERS SHALL BE DESIGNED BY A REGISTERED PROFESSIONAL ENGINEER.
18. DO NOT CORE DRILL OR DRILL THROUGH BEAMS, COLUMNS, AND SHEAR WALLS, UNLESS INDICATED ON STRUCTURAL DRAWINGS OR AS APPROVED BY THE STRUCTURAL ENGINEER.
19. DUCTWORK STATIC PRESSURE AND SEAL CLASS, BASED ON SMACNA STANDARDS.
20. INSULATE ALL HRV INTAKE AND EXHAUST DUCTS TO MINIMUM R-8 AND AIRSEAL THEM WHEREVER THEY PASS THROUGH CONDITIONED SPACE.
21. ENSURE WORK ACCESS CLEARANCE FOR ALL MECHANICAL ELECTRICAL PANELS AND DISCONNECTS IN ACCORDANCE WITH THE NEC.

FOR PROJECTS LOCATED IN WASHINGTON STATE ONLY:

22. REFER TO WASHINGTON STATE NREC COMPLIANCE REQUIREMENTS ON DRAWING SCHEDULE SHEETS FOR ADDITIONAL MECHANICAL PROVISIONS.
23. SEAL DUCT AND PLENUM IN ACCORDANCE WITH WSEC.
24. BALANCE HVAC SYSTEM IN ACCORDANCE WITH WSEC.
25. COMMISSION AND COMPLETE MECHANICAL SYSTEMS IN ACCORDANCE WITH WSEC.
26. INSULATE DUCT AND PLENUM IN ACCORDANCE WITH WSEC.
27. INSULATE PIPING IN ACCORDANCE WITH WSEC.
28. ENSURE VENTILATION IN ACCORDANCE WITH WSEC.

---

wrightsoft **Building Analysis**
Entire House
Balance Construction Consulting

Job: 5th St CUP
Date:
By:

6087 Beulah Dr, Ferndale, WA 98248

Project Information

For: First Lamp

Design Conditions

Location:
Olympia Regional, WA, US
Elevation: 188 ft
Latitude: 47°N

Outdoor:	**Heating**	**Cooling**
Dry bulb (°F)	20	87
Daily range (°F)	-	25 (M)
Wet bulb (°F)	-	66
Wind speed (mph)	15.0	7.5

Indoor:	**Heating**	**Cooling**
Indoor temperature (°F)	58	75
Design TD (°F)	38	12
Relative humidity (%)	50	50
Moisture difference (gr/lb)	31.5	-2.8

Infiltration:
Method: Blower door
Shielding / stories: 3 (partial) / 1
Pressure /ACH /AVF: 50 Pa / 3.0 / 367 cfm

Heating

Component	Btuh/ft²	Btuh	% of load
Walls	0.9	4815	34.0
Glazing	10.3	2426	17.1
Doors	1.8	973	6.9
Ceilings	0.2	820	5.8
Floors	0.8	2876	20.3
Infiltration	0.3	1185	8.4
Ducts		0	0
Piping		0	0
Humidification		0	0
Ventilation		1058	7.5
Adjustments		0	
Total		**14152**	**100.0**

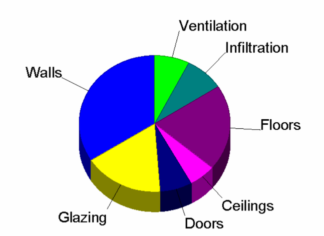

Cooling

Component	Btuh/ft²	Btuh	% of load
Walls	0.1	267	6.1
Glazing	7.8	1835	42.1
Doors	0.6	347	8.0
Ceilings	0.1	417	9.6
Floors	0.0	110	2.5
Infiltration	0.1	201	4.6
Ducts		0	0
Ventilation		262	6.0
Internal gains		920	21.1
Blower		0	0
Adjustments		0	
Total		**4359**	**100.0**

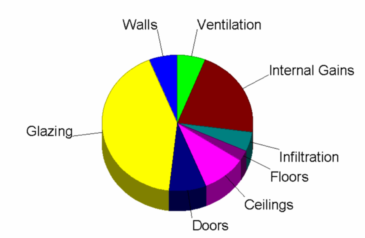

Latent Cooling Load = 772 Btuh
Overall U-value = 0.192 Btuh/ft²-°F, Window / Floor Area = 6.1 %

Data entries checked.

---

wrightsoft **Building Analysis**
Office 1 AHU
Balance Construction Consulting

Job: 5th St CUP
Date:
By:

6087 Beulah Dr, Ferndale, WA 98248

Project Information

For: First Lamp

Design Conditions

Location:
Olympia Regional, WA, US
Elevation: 188 ft
Latitude: 47°N

Outdoor:	**Heating**	**Cooling**
Dry bulb (°F)	20	87
Daily range (°F)	-	25 (M)
Wet bulb (°F)	-	66
Wind speed (mph)	15.0	7.5

Indoor:	**Heating**	**Cooling**
Indoor temperature (°F)	70	75
Design TD (°F)	50	12
Relative humidity (%)	50	50
Moisture difference (gr/lb)	42.8	-2.8

Infiltration:
Method: Blower door
Shielding / stories: 3 (partial) / 1
Pressure /ACH /AVF: 50 Pa / 3.0 / 426 cfm

Heating

Component	Btuh/ft²	Btuh	% of load
Walls	3.2	1014	26.4
Glazing	13.9	1055	27.4
Doors	19.3	406	10.6
Ceilings	1.3	308	8.0
Floors	0.8	200	5.2
Infiltration	2.4	287	7.5
Ducts		0	0
Piping		0	0
Humidification		0	0
Ventilation		576	15.0
Adjustments		0	
Total		**3847**	**100.0**

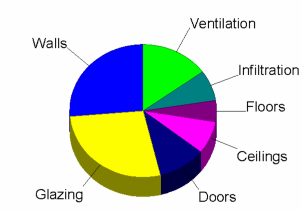

Cooling

Component	Btuh/ft²	Btuh	% of load
Walls	0.2	64	3.3
Glazing	10.5	798	41.3
Doors	8.3	174	9.0
Ceilings	0.8	184	9.5
Floors	0.2	50	2.6
Infiltration	0.5	61	3.2
Ducts		0	0
Ventilation		143	7.4
Internal gains		460	23.8
Blower		0	0
Adjustments		0	
Total		**1935**	**100.0**

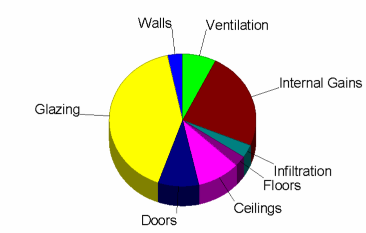

Latent Cooling Load = 371 Btuh
Overall U-value = 0.076 Btuh/ft²-°F, Window / Floor Area = 32.0 %

WARNING: window to floor area ratio = 32.0% - more than 25%.

---

wrightsoft **Building Analysis**
Office 2 AHU
Balance Construction Consulting

Job: 5th St CUP
Date:
By:

6087 Beulah Dr, Ferndale, WA 98248

Project Information

For: First Lamp

Design Conditions

Location:
Olympia Regional, WA, US
Elevation: 188 ft
Latitude: 47°N

Outdoor:	**Heating**	**Cooling**
Dry bulb (°F)	20	87
Daily range (°F)	-	25 (M)
Wet bulb (°F)	-	66
Wind speed (mph)	15.0	7.5

Indoor:	**Heating**	**Cooling**
Indoor temperature (°F)	70	75
Design TD (°F)	50	12
Relative humidity (%)	50	50
Moisture difference (gr/lb)	42.8	-2.8

Infiltration:
Method: Blower door
Shielding / stories: 3 (partial) / 1
Pressure /ACH /AVF: 50 Pa / 3.0 / 426 cfm

Heating

Component	Btuh/ft²	Btuh	% of load
Walls	3.8	1511	29.4
Glazing	13.9	1370	26.7
Doors	19.3	406	7.9
Ceilings	1.3	388	7.6
Floors	0.8	243	4.7
Infiltration	2.7	726	14.1
Ducts		0	0
Piping		0	0
Humidification		0	0
Ventilation		492	9.6
Adjustments		0	
Total		**5137**	**100.0**

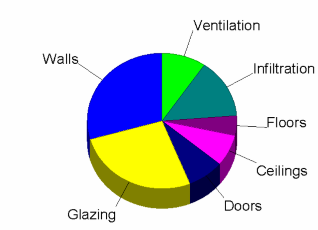

Cooling

Component	Btuh/ft²	Btuh	% of load
Walls	0.5	202	8.4
Glazing	10.5	1036	42.9
Doors	8.3	174	7.2
Ceilings	0.8	233	9.6
Floors	0.2	60	2.5
Infiltration	0.5	131	5.4
Ducts		0	0
Ventilation		122	5.0
Internal gains		460	19.0
Blower		0	0
Adjustments		0	
Total		**2418**	**100.0**

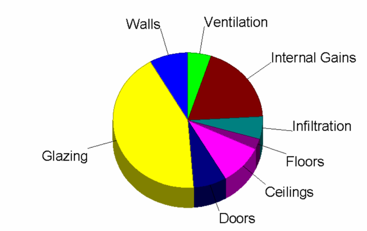

Latent Cooling Load = 364 Btuh
Overall U-value = 0.079 Btuh/ft²-°F, Window / Floor Area = 32.9 %

WARNING: window to floor area ratio = 32.9% - more than 25%.

ENGINEERED PROJECTS CONSULTING
QUALITY, PERFORMANCE, INTEGRITY

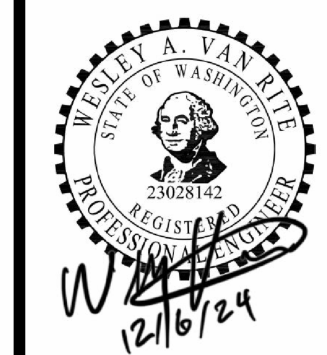

5TH ST SE CUP
111 5th St SE
Puyallup, WA 98372

Notes & Load Summary

Drawn By:
Aaron Barnett
12/4/2024
Reviewed By:
Josh Taylor
12/5/2024

M001

For Permit Only

Fan Coil Schedule						
Designation	Manufacturer	Model	Airflow (cfm)	Maximum External SP (in. WG)	Outdoor Unit	Reference Page
FCU-1	Mitsubishi	MSZ-FH06NA	200	N/A	MUZ-FH06NA	M601
FCU-2	Mitsubishi	MSZ-FH06NA	200	N/A	MUZ-FH06NA	M601

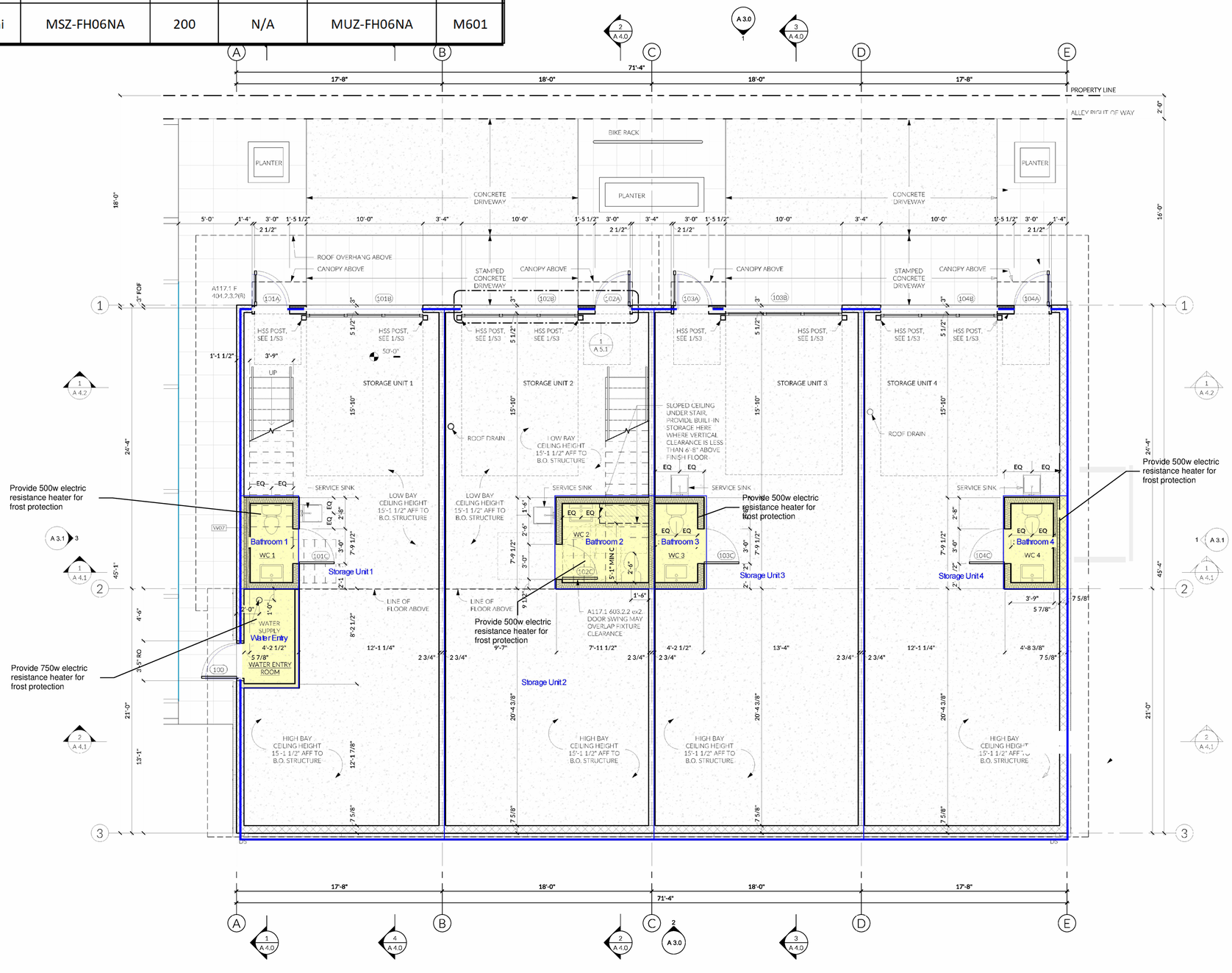

For Permit Only

5TH ST SE CUP
111 5th St SE
Puyallup, WA 98372

L1 Heating and Cooling Plan

Drawn By:
Aaron Barnett
12/4/2024
Reviewed By:
Josh Taylor
12/5/2024

M101

Fan Coil Schedule						
Designation	Manufacturer	Model	Airflow (cfm)	Maximum External SP (in. WG)	Outdoor Unit	Reference Page
FCU-1	Mitsubishi	MSZ-FH06NA	200	N/A	MUZ-FH06NA	M601
FCU-2	Mitsubishi	MSZ-FH06NA	200	N/A	MUZ-FH06NA	M601

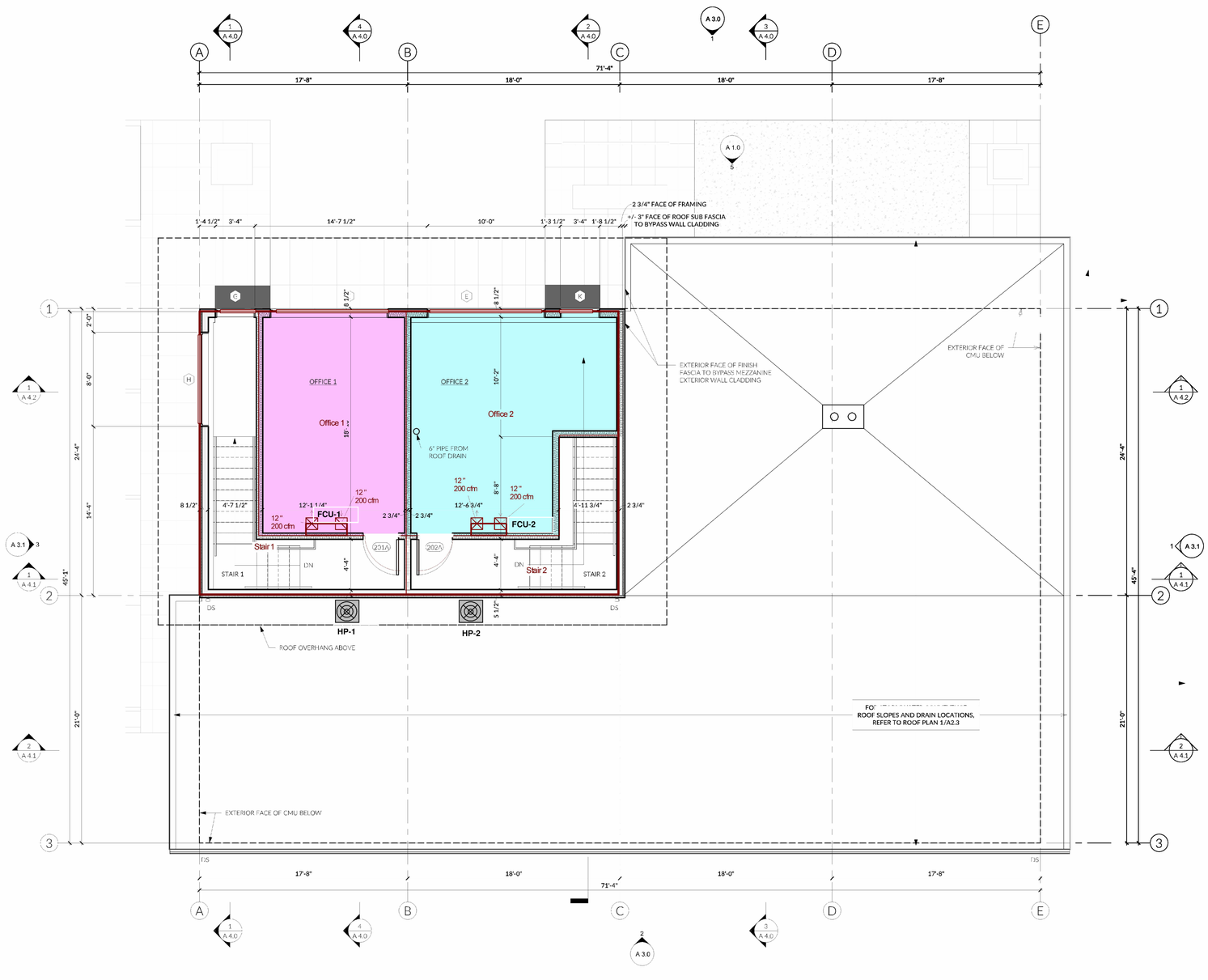

For Permit Only

5TH ST SE CUP
111 5th St SE
Puyallup, WA 98372

Mezzanine Heating and Cooling Plan

Drawn By:
Aaron Barnett
12/4/2024
Reviewed By:
Josh Taylor
12/5/2024

M102

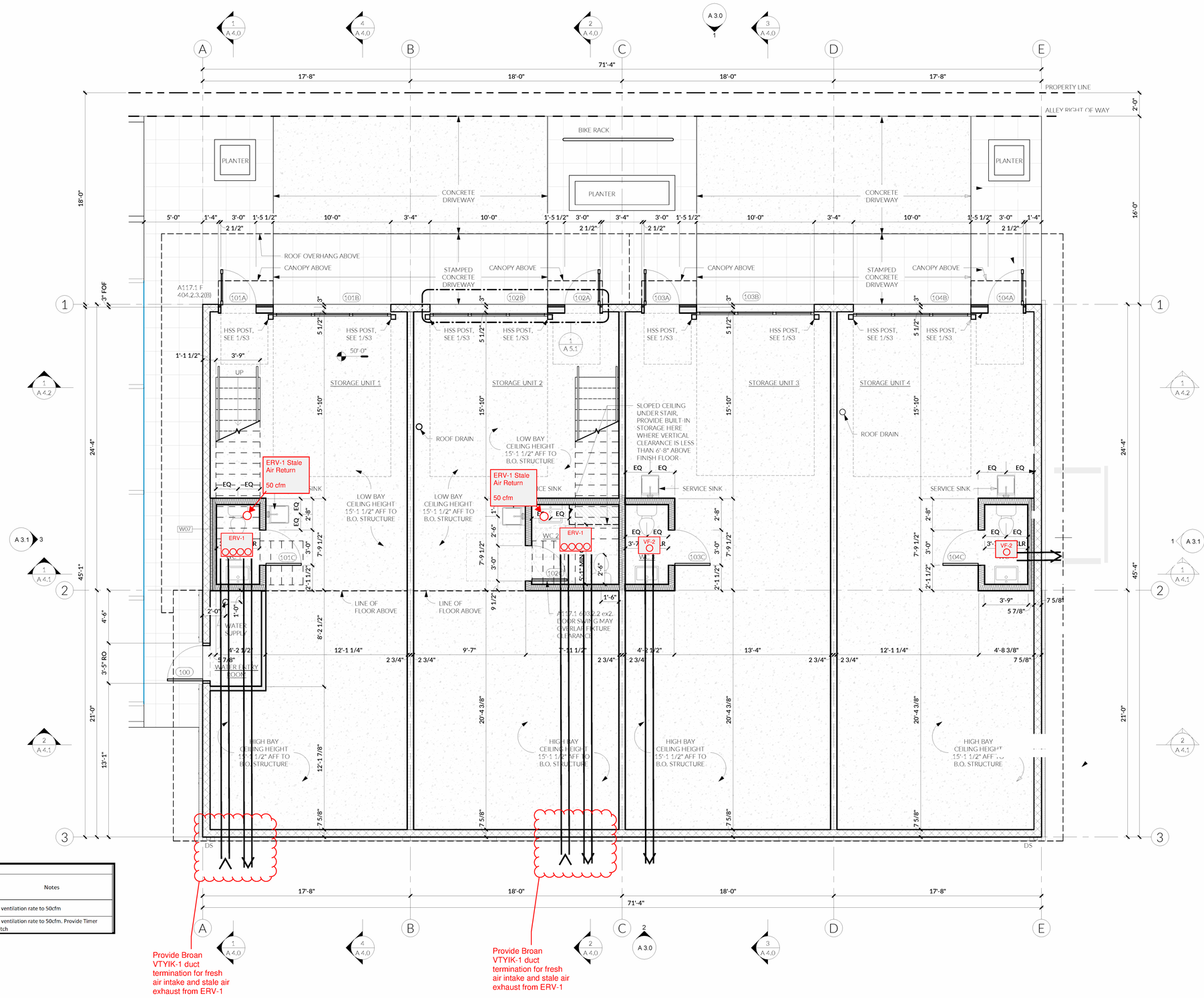

Ventilation Equipment Schedule

Mark	Manufacturer	Model	Airflow (cfm)	Maximum External SP (in. WG)	Operation	Notes
ERV-1	Panasonic	FV-10VE2	50-100	0.4"	Continuous	Set ventilation rate to 50cfm
VF-2	Panasonic	FV-0511VK2	50-80-110	0.4"	Continuous	Set ventilation rate to 50cfm. Provide Timer Switch

For Permit Only

5TH ST SE CUP
111 5th St SE
Puyallup, WA 98372

Ventilation Plan

Drawn By:
Aaron Barnett
12/4/2024
Reviewed By:
Josh Taylor
12/5/2024

M201

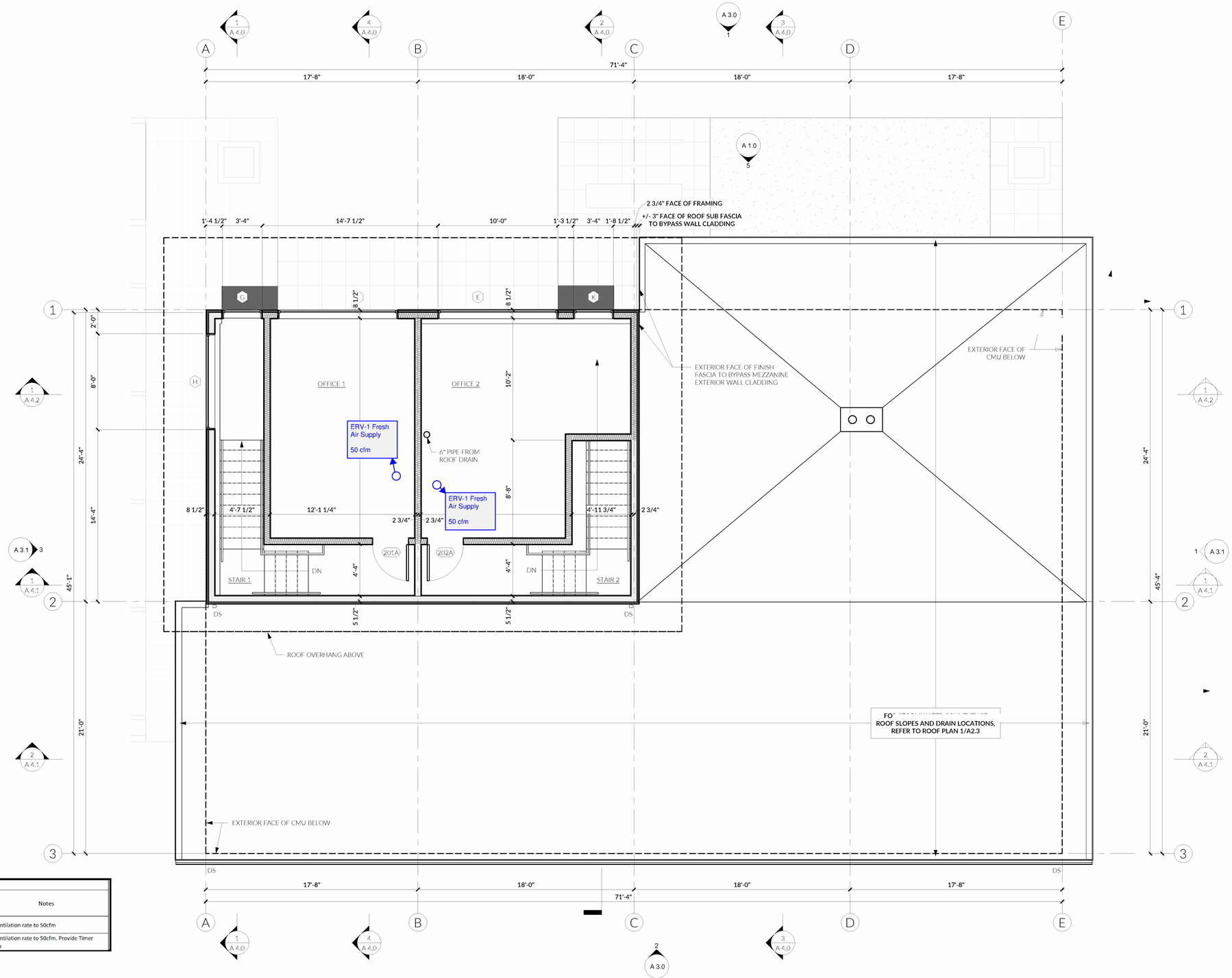

Ventilation Equipment Schedule

Mark	Manufacturer	Model	Airflow (cfm)	Maximum External SP (in. WG)	Operation	Notes
ERV-1	Panasonic	FV-10VE2	50-100	0.4"	Continuous	Set ventilation rate to 50cfm
VF-2	Panasonic	FV-0511VK2	50-80-110	0.4"	Continuous	Set ventilation rate to 50cfm. Provide Timer Switch

WESLEY A. VAN RIPER
STATE OF WASHINGTON
23028142
REGISTERED PROFESSIONAL ENGINEER
12/6/24

5TH ST SE CUP
111 5th St SE
Puyallup, WA 98372

Mezzanine Ventilation Plan

Drawn By:
Aaron Barnett
12/4/2024
Reviewed By:
Josh Taylor
12/5/2024

For Permit Only

M202

Indoor Units:	1 / 1 to 1	
Capacity:	6 / 3 to 6	(100.0%)

* Connectable capacity is not actual capacity.

Total Pipe Length: 57.0 / 65.0 feet

Correction Factors

Temperature:	1.08	1.00
Piping Length:	0.97	0.99
Defrosting:	-	0.96
User Derate:	1.00	1.00
Total Derate:	1.05	0.95

Additional Refrigerant: 0.41 lb

Total Refrigerant Amount: 2.97 lb

Conditions (°F)

Cooling

Indoor DB 80.0 Humidity 51.8% Indoor WB 67.0

Outdoor DB 86.0

Heating

Indoor DB 70.0

Outdoor DB 19.0 Humidity 75.6% Outdoor WB 17.5

System 1

MUZ-FH06NA 25.0 ft

1/4 / 3/8

55.0ft (2)

MSZ-FH06NA 15.0 ft

N/A / 1 / Office 1 (FCU-1)

Pipe Dia. Liquid / Gas | Model Number | Elevation | Clg.Total (Sens.) | Htg.Total

Pipe Length (Elbows) | Address / Group / Room / Tag Ref.

6,305 BTU/h (5,870 BTU/h)

8,276 BTU/h

Est. Cooling Discharge Air Temp: 67.3

Est. Heating Discharge Air Temp: 87.6

SPECIFICATIONS: MSZ-FS06NA & MUZ-FS06NA

Cooling at 95°F	Maximum Capacity	BTUH	9,000
	Rated Capacity	BTUH	6,000
	Minimum Capacity	BTUH	1,700
	Maximum Power Input	W	560
	Rated Power Input	W	315
	Moisture Removal	Pints/h	0.2
	Sensible Heat Factor		0.96
	Power Factor [208V / 230V]	%	79.0 / 80.0
Heating at 47°F	Maximum Capacity	BTUH	14,000
	Rated Capacity	BTUH	8,700
	Minimum Capacity	BTUH	1,600
	Maximum Power Input	W	1,270
	Rated Power Input	W	545
	Power Factor [208V / 230V]	%	90.0 / 91.0
Heating at 17°F	Maximum Capacity	BTUH	12,840
	Rated Capacity	BTUH	5,800
	Maximum Power Input	W	1,400
	Rated Power Input	W	390
Heating at 5°F	Maximum Capacity	BTUH	10,500
	Maximum Power Input	W	1,250
Heating at -5°F	Maximum Capacity	BTUH	8,700
Heating at -13°F	Maximum Capacity	BTUH	7,250
Efficiency	SEER2		32.2
	EER2		19.0
	HSPF2 [IV]		11.9
	COP at 47°F		4.68
	COP at 17°F at Maximum Capacity/		2.69
	COP at 5°F at Maximum Capacity/		2.46
	COP at -5°F at Maximum Capacity/		2.25
	COP at -13°F at Maximum Capacity/		1.93
	ENERGY STAR® Certified		Yes
Electrical	Voltage, Phase, Frequency		208/230, 1, 60
	Guaranteed Voltage Range	V AC	187 - 253
	Voltage: Indoor - Outdoor, S1-S2	V AC	208/230
	Voltage: Indoor - Outdoor, S2-S3	V DC	24
	Short-circuit Current Rating [SCCR]	kA	5
	Recommended Fuse/Breaker Size (Outdoor)	A	15
	Recommended Wire Size [Indoor - Outdoor]	AWG	14
	Power Supply		Indoor unit is powered by the outdoor unit
Indoor Unit	MCA	A	0.8
	MOCP	A	15
	Fan Motor Full Load Amperage	A	DC Motor
	Fan Motor Type		DC Motor
	Airflow Rate at Cooling, Dry	CFM	137–167–221–354–381
	Airflow Rate at Cooling, Wet	CFM	117–147–220–289–328
	Airflow Rate at Heating, Dry	CFM	140–147–229–325–437
	Sound Pressure Level [Cooling]	dB[A]	20–24–28–36–40
	Sound Pressure Level [Heating]	dB[A]	20–24–28–36–42
	Dimensions	In. [mm]	5/8 [15.88]
	Cooling on Heat Exchanger		Coat Same Cooling
	External Finish Color		Munsell 1.0Y 9.2/0.2
	Unit Dimension	W x D x H. In. [mm]	36-7/16 x 9-3/16 x 12 (+1/16) [925 x 234 x 305 (+1.7)]
	Package Dimensions	W x D x H. In. [mm]	38 x 12-1/4 x 15-1/2 [990 x 310 x 400]
	Unit Weight	Lbs. [kg]	29 [13.5]
	Package Weight	Lbs. [kg]	34 [15.4]
Indoor Unit Operating Temperature Range	Cooling Intake Air Temp [Maximum / Minimum]*	°F	90 DB, 73 WB / 67 DB, 57 WB
	Heating Intake Air Temp [Maximum / Minimum]	°F	80 DB / 70 DB

NOTES:
ARI Rated Conditions
(Rated data is determined at a fixed compressor speed)

*Cooling (Indoor // Outdoor):	°F	80 DB, 67 WB // 95 DB, 75 WB
*Heating at 47°F (Indoor // Outdoor):	°F	70 DB, 60 WB // 47 DB, 43 WB
*Heating at 17°F (Indoor // Outdoor):	°F	70 DB, 60 WB // 17 DB, 15 WB

Conditions

*Heating at 5°F (Indoor // Outdoor):	°F	70 DB, 60 WB // 5 DB, 4 WB
*Heating at -5°F (Indoor // Outdoor):	°F	70 DB, 60 WB // -5 DB, -6 WB
*Heating at -13°F (Indoor // Outdoor):	°F	70 DB, 60 WB // -13 DB, -14 WB

*Indoor/Outdoor Unit Operating Temperature Range (Cooling Air Temp [Maximum / Minimum]):
• Applications should be restricted to comfort cooling only; equipment cooling applications are not recommended for low ambient temperature conditions.

**Outdoor Unit Operating Temperature Range (Cooling Thermal Lock-out / Re-start Temperatures; Heating Thermal Lock-out / Re-start Temperatures):
• System cuts out in heating mode to avoid thermistor error and automatically restarts at these temperatures.

Specifications are subject to change without notice.

© 2023 Mitsubishi Electric Trane HVAC US LLC. All rights reserved.

Indoor Units:	1 / 1 to 1	
Capacity:	6 / 3 to 6	(100.0%)

* Connectable capacity is not actual capacity.

Total Pipe Length: 47.0 / 65.0 feet

Correction Factors

Temperature:	1.08	1.00
Piping Length:	0.98	1.00
Defrosting:	-	0.96
User Derate:	1.00	1.00
Total Derate:	1.06	0.95

Additional Refrigerant: 0.27 lb

Total Refrigerant Amount: 2.83 lb

Conditions (°F)

Cooling

Indoor DB 80.0 Humidity 51.8% Indoor WB 67.0

Outdoor DB 86.0

Heating

Indoor DB 70.0

Outdoor DB 19.0 Humidity 75.6% Outdoor WB 17.5

System 2

MUZ-FH06NA 25.0 ft

1/4 / 3/8

45.0ft (2)

MSZ-FH06NA 25.0 ft

N/A / 2 / Office 2 (FCU-2)

Pipe Dia. Liquid / Gas | Model Number | Elevation | Clg.Total (Sens.) | Htg.Total

Pipe Length (Elbows) | Address / Group / Room / Tag Ref.

6,358 BTU/h (5,890 BTU/h)

8,291 BTU/h

Est. Cooling Discharge Air Temp: 67.3

Est. Heating Discharge Air Temp: 87.6

SPECIFICATIONS: MSZ-FS06NA & MUZ-FS06NA

Outdoor Unit	MCA	A	10.0
	MOCP	A	15
	Fan Motor Full Load Amperage	A	0.5
	Fan Motor Output	W	55
	Airflow Rate [Cooling / Heating]	CFM	1141 / 1183
	Refrigerant Control		LEV
	Defrost Method		Reverse Cycle
	Coating on Heat Exchanger		Blue Fin Coating
	Sound Pressure Level, Cooling	dB(A)	49
	Sound Pressure Level, Heating	dB(A)	49
	Compressor Type		Twin Rotary
	Compressor Model		SNB092FQKMT
	Compressor Rated Load Amps	A	9.2
	Compressor Locked Rotor Amps	A	7.4
	Compressor Oil [Type # Charge]	oz.	FVC68.3 / 0.35
	External Finish Color		Munsell 2Y 7.8/1.1
	Base Pan Heater		Optional
	Unit Dimensions	W x D x H. In. [mm]	31-1/2 x 11-1/4 x 21-5/8 [800 x 285 x 550]
	Package Dimensions	W x D x H. In. [mm]	37 x 15 x 24-1/2 [940 x 380 x 630]
	Unit Weight	Lbs. [kg]	62 [27]
	Package Weight	Lbs. [kg]	69 [40]
Outdoor Unit Operating Temperature Range	Cooling Air Temp [Maximum / Minimum]*	°F	115 DB / 14 DB
	Cooling Thermal Lock-out / Re-start Temperatures**	°F	-4 / 0
	Heating Air Temp [Maximum / Minimum]	°F	75 DB, 65 WB / -13 DB, -14 WB
	Heating Thermal Lock-out / Re-start Temperatures**	°F	-18 / -14
Refrigerant	Type		R410A
	Pre-Charged Refrigerant Amount	Lbs. oz	2.0, 9.0
	Maximum Pre-Charged Piping Length	Ft. [m]	25.0 [7.5]
	Additional Refrigerant Charge Per Additional Piping Length	oz./ft. [g/m]	0.216 [20]
Piping	Gas Pipe Size O.D. [Flared]	In.[mm]	3/8 [9.52]
	Liquid Pipe Size O.D. [Flared]	In.[mm]	1/4 [6.35]
	Maximum Piping Length	Ft. [m]	65 [20]
	Maximum Height Difference	Ft. [m]	40 [12]
	Maximum Number of Bends		10

NOTES:
ARI Rated Conditions
(Rated data is determined at a fixed compressor speed)

*Cooling (Indoor // Outdoor):	°F	80 DB, 67 WB // 95 DB, 75 WB
*Heating at 47°F (Indoor // Outdoor):	°F	70 DB, 60 WB // 47 DB, 43 WB
*Heating at 17°F (Indoor // Outdoor):	°F	70 DB, 60 WB // 17 DB, 15 WB

Conditions

*Heating at 5°F (Indoor // Outdoor):	°F	70 DB, 60 WB // 5 DB, 4 WB
*Heating at -5°F (Indoor // Outdoor):	°F	70 DB, 60 WB // -5 DB, -6 WB
*Heating at -13°F (Indoor // Outdoor):	°F	70 DB, 60 WB // -13 DB, -14 WB

*Indoor/Outdoor Unit Operating Temperature Range (Cooling Air Temp [Maximum / Minimum]):
• Applications should be restricted to comfort cooling only; equipment cooling applications are not recommended for low ambient temperature conditions.

**Outdoor Unit Operating Temperature Range (Cooling Thermal Lock-out / Re-start Temperatures; Heating Thermal Lock-out / Re-start Temperatures):
• System cuts out in heating mode to avoid thermistor error and automatically restarts at these temperatures.

Specifications are subject to change without notice.

© 2023 Mitsubishi Electric Trane HVAC US LLC. All rights reserved.

ENGINEERED PROJECTS CORPORATION

WESLEY A. VAN RIPER
STATE OF WASHINGTON
23028142
PROFESSIONAL ENGINEER
12/6/24

5TH ST SE CUP

111 5th St SE
Puyallup, WA 98372

Heat Pump System Details

Drawn By:
Aaron Barnett
12/4/2024
Reviewed By:
Josh Taylor
12/5/2024

For Permit Only

M601

wrightsoft

Manual S Compliance Report

Office 1 AHU

Balance Construction Consulting

Job: 5th St CUP
Date:
By:

5007 Beaver Dr, Ferndale, WA 98248

Project Information

For: First Lamp

Cooling Equipment

Design Conditions

Outdoor design DB:	87.3°F	Sensible gain:	1932	Btuh	Entering coil DB:	75.7°F	
Outdoor design WB:	66.0°F	Latent gain:	372	Btuh	Entering coil WB:	62.7°F	
Indoor design DB:	75.0°F	Total gain:	2303	Btuh			
Indoor RH:	50%	Estimated airflow:	200	cfm			

Manufacturer's Performance Data at Actual Design Conditions

Equipment type:	Split ASHP					
Manufacturer:	Mitsubishi Electric			Model:	MUZ-FS06NAH****+MSZ-FS06NA***	
Actual airflow:	200	cfm				
Sensible capacity:	1800	Btuh	93% of load			
Latent capacity:	4200	Btuh	1131% of load			
Total capacity:	6000	Btuh	260% of load	SHR:	30%	

Heating Equipment

Design Conditions

Outdoor design DB:	20.4°F	Heat loss:	3883	Btuh	Entering coil DB:	67.3°F	
Indoor design DB:	70.0°F						

Manufacturer's Performance Data at Actual Design Conditions

Equipment type:	Split ASHP						
Manufacturer:	Mitsubishi Electric			Model:	MUZ-FS06NAH****+MSZ-FS06NA***		
Actual airflow:	200	cfm					
Output capacity:	8700	Btuh	224% of load			Capacity balance:	0.3 °F
Supplemental heat required:		0	Btuh			Economic balance:	-99 °F

Backup equipment type:	Elec strip					
Manufacturer:			Model:			
Actual airflow:	200	cfm				
Output capacity:	1.0	kW	85% of load	Temp. rise:	50	°F

Meets all requirements of ACCA Manual S.

wrightsoft
Right-Suite® Universal 2024 24.0.03 RSU8565
ap Storage\MUR\quick\Storage_MJE_11292024.rup Calc = MJE Print Door faces N

2024-Dec-04 20:36:39
Page 3

wrightsoft

Manual S Compliance Report

Office 2 AHU

Balance Construction Consulting

Job: 5th St CUP
Date:
By:

5007 Beaver Dr, Ferndale, WA 98248

Project Information

For: First Lamp

Cooling Equipment

Design Conditions

Outdoor design DB:	87.3°F	Sensible gain:	2418	Btuh	Entering coil DB:	75.6°F	
Outdoor design WB:	66.0°F	Latent gain:	364	Btuh	Entering coil WB:	62.7°F	
Indoor design DB:	75.0°F	Total gain:	2782	Btuh			
Indoor RH:	50%	Estimated airflow:	200	cfm			

Manufacturer's Performance Data at Actual Design Conditions

Equipment type:	Split ASHP					
Manufacturer:	Mitsubishi Electric			Model:	MUZ-FS06NAH****+MSZ-FS06NA***	
Actual airflow:	200	cfm				
Sensible capacity:	2400	Btuh	99% of load			
Latent capacity:	3600	Btuh	988% of load			
Total capacity:	6000	Btuh	216% of load	SHR:	40%	

Heating Equipment

Design Conditions

Outdoor design DB:	20.4°F	Heat loss:	5137	Btuh	Entering coil DB:	67.7°F	
Indoor design DB:	70.0°F						

Manufacturer's Performance Data at Actual Design Conditions

Equipment type:	Split ASHP						
Manufacturer:	Mitsubishi Electric			Model:	MUZ-FS06NAH****+MSZ-FS06NA***		
Actual airflow:	200	cfm					
Output capacity:	8700	Btuh	169% of load			Capacity balance:	8.0 °F
Supplemental heat required:		0	Btuh			Economic balance:	-99 °F

Backup equipment type:	Elec strip					
Manufacturer:			Model:			
Actual airflow:	200	cfm				
Output capacity:	1.4	kW	90% of load	Temp. rise:	50	°F

Meets all requirements of ACCA Manual S.

wrightsoft
Right-Suite® Universal 2024 24.0.03 RSU8565
ap Storage\MUR\quick\Storage_MJE_11292024.rup Calc = MJE Print Door faces N

2024-Dec-04 20:36:39
Page 4

ENGINEERED PROJECTS CONSULTING
QUALITY · PERFORMANCE · INTEGRITY

WESLEY A. VAN RUFF
STATE OF WASHINGTON
23028142
REGISTERED PROFESSIONAL ENGINEER
12/6/24

5TH ST SE CUP
111 5th St SE
Puyallup, WA 98372

Manual S Compliance Reports

Drawn By:
Aaron Barnett
12/4/2024
Reviewed By:
Josh Taylor
12/5/2024

M602

For Permit Only

LIGHTING FIXTURE SCHEDULE

TYPE	MANUFACTURER	LAMPS	WATTS	MOUNTING
A1	METALUX 8SLTPSLC-UNV OR EQUAL	LED	88	SURFACE
A2	METALUX 4SLTPSLC-UNV OR EQUAL	LED	30	SURFACE
A3	METALUX 2BCLED-LD4-16SL-F-UNV- L835-CD-1 OR EQUAL	LED	13	WALL
A4	TRULY GREEN SOLUTIONS 88-14-WS-C-T-F-SK OR EQUAL	LED	40	SURFACE
B1	HALO PR6-FS12-D010-PR6M-12-MD-8FS- MW OR EQUAL (SET FOR 1500 LUMENS)	LED	15	RECESSED
B1X	SAME AS TYPE B1 WITH EMERGENCY BATTERY PACK			
B2	HALO SMD4R-6-9S-WH OR EQUAL	LED	9	SURFACE
E1	SENSO LET11W-WM-15-30K-F30-DL- BK-BK-010S OR EQUAL	LED	14	WALL
E1X	SAME AS TYPE E1 WITH REMOTE EMERGENCY BATTERY PACK			
E2	SENSO LET11W-WM-1010-30K-F30-F17-DL- BK-BK-010S OR EQUAL	LED	18	WALL
X1	EMERGI-LITE ELXN400G-2LED OR EQUAL	INCLUDED	3	UNIVERSAL
X2	EMERGI-LITE EL-2LED OR EQUAL	INCLUDED	3	WALL

ELECTRICAL SYMBOLS LEGEND

- EXIT LIGHT WITH BATTERY, UNIVERSAL MOUNTING.
- EMERGENCY FLOODLIGHT WITH BATTERY.
- LED LIGHT FIXTURE, SURFACE MOUNTED ON CEILING.
- LED LIGHT FIXTURE, WITH EMERGENCY BATTERY PACK.
- LED LIGHT FIXTURE, WALL MOUNTED.
- LED DOWNLIGHT FIXTURE.
- A1 — LIGHT FIXTURE TYPE. A1 = SPECIFIC LIGHTING FIXTURE REFERENCED ON LIGHTING FIXTURE SCHEDULE.
- S — LIGHT SWITCH TOGGLE TYPE, SINGLE POLE, SUBSCRIPTS; 3 = THREE WAY, 4 = FOUR WAY, D = DIMMER CONTROL, K = KEY OPERATED, P = PILOT LIGHT, a, b, c, ETC = NUMBER OF SWITCHES AT THE LOCATION AND SPECIFIC FIXTURES CONTROLLED. MOUNT AT 42 INCHES AFF.
- S_Y — AUTOMATIC/MANUAL OCCUPANCY SENSOR AND SINGLE POLE TOGGLE SWITCH. SENSORWORX #SWX-123 OR EQUAL. SWITCH SHALL BE PROGRAMMED FOR MANUAL ON, AUTOMATIC OFF.
- S_M — WIRELESS NETWORKED LIGHT SWITCH. D=DIMMER, 3=THREE WAY, 4=FOUR WAY.
- I/O — WIRELESS INPUT/ OUTPUT POWER PACK MODULE FOR LIGHT CONTROLS.
- OS — DUAL TECHNOLOGY AUTOMATIC OCCUPANCY SENSOR DEVICE.
- PS — DAYLIGHT PHOTOSENSOR

BUILDING PERMIT SUBMITTAL

CROSS ENGINEERS, INC
923 Martin Luther King Jr. Way
Tacoma, WA 98405
Phone: (253) 759-0118
Job Number: 24-202
info@crossengineers.com

5TH STREET STORAGE
111 5TH STREET SE
PUYALLUP, WA 98372

ELECTRICAL SYMBOLS LEGEND/
LIGHT FIXTURE SCHEDULE

REVISIONS:

STEVEN L. HUBBS
STATE OF WASHINGTON
40029060
REGISTERED
PROFESSIONAL ENGINEER
12/10/24

SCALE: AS NOTED	
DATE: 12-10-2024	SHEET
DRAWN BY: SJK	E1
CHECKED BY: SLH	
JOB NO.: 24-202	OF - -

Plotted: Dec 10, 2024 – 3:50pm File: N:\Jobs\2024\24-202\Dwgs\24-202-E1.dwg By: SCOTTK

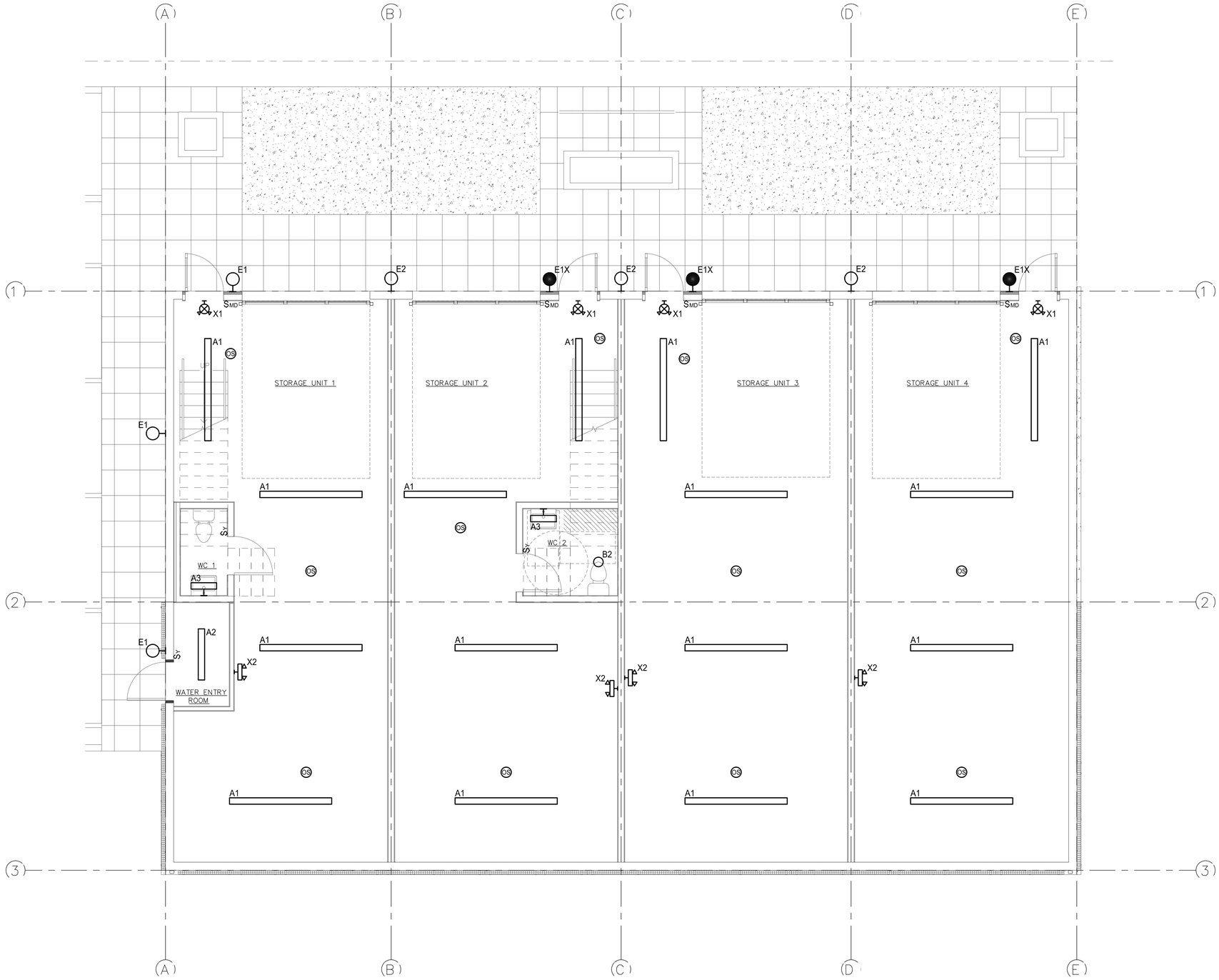

LEVEL 1 LIGHTING FLOOR PLAN

SCALE: 1/4"=1'-0"

N

BUILDING PERMIT SUBMITTAL

CROSS ENGINEERS, INC
923 Martin Luther King Jr. Way
Tacoma, WA 98405
info@crossengineers.com
Phone: (253) 759-0118
Job Number: 24-202

5TH STREET STORAGE
111 5TH STREET SE
PUYALLUP, WA 98372

LEVEL 1 LIGHTING FLOOR PLAN

REVISIONS:

STEVEN L. HUBBS
STATE OF WASHINGTON
0029060
REGISTERED
PROFESSIONAL ENGINEER
12/10/24

SCALE: AS NOTED	
DATE: 12-10-2024	SHEET
DRAWN BY: SJK	E2
CHECKED BY: SLH	
JOB NO.: 24-202	OF - -

Plotted: Dec 10, 2024 – 3:51pm File: C:\Users\SCOTTK~1.CRO\AppData\Local\Temp\AcPublish_41868\24-202-E2.dwg By: SCOTTK

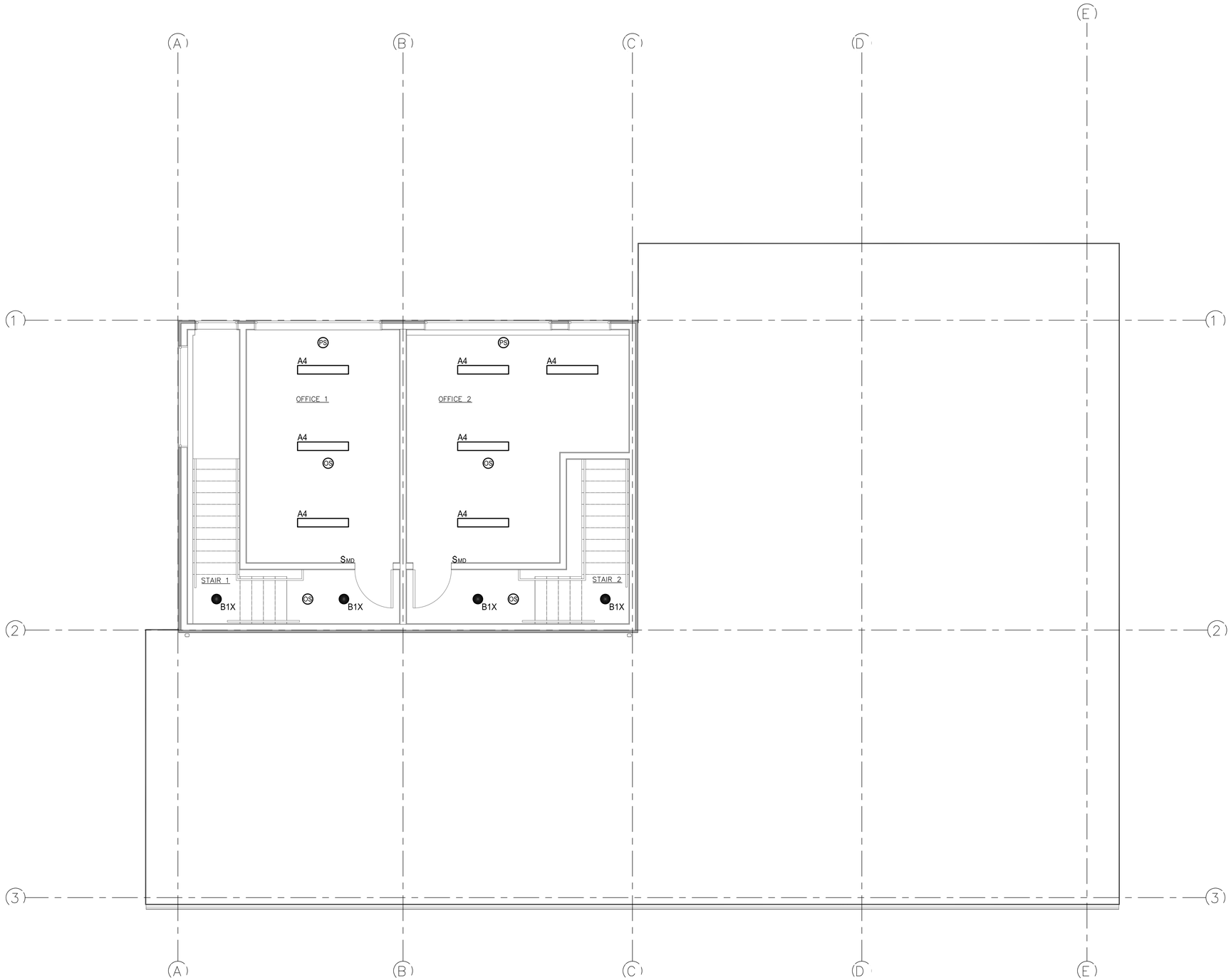

MEZZANINE LIGHTING FLOOR PLAN

SCALE: 1/4"=1'-0"

N

BUILDING PERMIT SUBMITTAL

CROSS ENGINEERS, INC
923 Martin Luther King Jr. Way
Tacoma, WA 98405
info@crossengineers.com
Phone: (253) 759-0118
Job Number: 24-202

5TH STREET STORAGE
111 5TH STREET SE
PUYALLUP, WA 98372

MEZZANINE LIGHTING FLOOR PLAN

REVISIONS:

STEVEN L. HUBBS
STATE OF WASHINGTON
0029060
REGISTERED
PROFESSIONAL ENGINEER
12/10/24

SCALE: AS NOTED	
DATE: 12-10-2024	SHEET
DRAWN BY: SJK	E3
CHECKED BY: SLH	
JOB NO.: 24-202	OF - -

Plotted: Dec 10, 2024 - 3:51pm File: N:\Jobs\2024\24-202\Dwgs\24-202-E3.dwg By: SCOTTK

GENERAL NOTES

1. THE FOLLOWING NOTES APPLY TO ALL PLUMBING DRAWINGS. ADDITIONAL PLUMBING NOTES MAY BE INDICATED ON EACH PLUMBING DRAWING. SEE SPECIFICATIONS FOR ADDITIONAL REQUIREMENTS.
2. INSTALLATION SHALL COMPLY WITH ALL GOVERNING CODES AND REGULATIONS (LOCAL AND STATE). NOTHING ON THE DRAWINGS OR SPECIFICATIONS SHALL BE CONSTRUED AS ALLOWING DEVIATION FROM THIS REQUIREMENT. IF A CONFLICT SHOULD OCCUR BETWEEN DRAWINGS AND REGULATIONS, THE REGULATIONS SHALL TAKE PRECEDENT AND CONTRACTOR SHALL NOTIFY ENGINEER IN WRITING OF SUCH CONFLICT PRIOR TO PROCEEDING WITH INSTALLATION.
3. INSTALL ALL WASTE LINE CLEANOUTS IN ACCORDANCE WITH CHAPTER SEVEN OF THE UNIFORM PLUMBING CODE:
   A. 3" WASTE PIPE - 3" CLEANOUT WITH 2.5" PLUG
   B. 4" WASTE PIPE - 4" CLEANOUT WITH 3.5" PLUG
   C. 6" WASTE PIPE - 4" CLEANOUT WITH 3.5" PLUG
4. WASTE, VENT AND SUPPLY PIPING SIZES TO INDIVIDUAL PLUMBING FIXTURES SHALL BE AS SHOWN ON PLUMBING FIXTURE SCHEDULES. BELOW GRADE SANITARY WASTE PIPING SIZES SHALL BE AS SHOWN ON PLANS AND FIXTURE SCHEDULES AND SHALL NOT BE LESS THAN 2" DIAMETER.
5. ALL SANITARY SEWER PIPING BELOW SLAB SHALL BE INSTALLED AT A MINIMUM OF 1/4" PER FT SLOPE UNLESS APPROVAL IS PROVIDED BY THE "ADMINISTRATIVE AUTHORITY" IN WRITING FOR A SHALLOWER IN NO CASES SHALL SEWER PIPING BE INSTALLED AT LESS THAN 1/8" PER FT SLOPE. IN NO CASES WILL PIPING SMALLER THAN 4" BE INSTALLED AT SLOPES SHALLOWER THAN 1/4" PER FOOT. PIPING INSTALLED AT 1/8"/FT SHALL BE RESIZED PER CHAPTER 7 OF THE UNIFORM PLUMBING CODE AND SUPPORTING CALCULATION SUBMITTED TO ENGINEER FOR REVIEW.
6. PROVIDE STOPS PRIOR TO ALL PLUMBING EQUIPMENT. THIS SHALL ALSO INCLUDE PROVIDING INTEGRAL STOPS ON ALL SHOWER AND TUB/SHOWER VALVES (WHETHER SPECIFIED OR NOT). PROVIDE WASTE TRAPS AT ALL DIRECT CONNECTED EQUIPMENT IN ACCORDANCE WITH CODE AND THE SPECIFICATIONS.
7. PROVIDE TRAP PRIMERS AT ALL FLOOR DRAINS UNLESS NOTED OTHERWISE. PROVIDE UNION ON UPSTREAM AND DOWNSTREAM SIDE OF ALL TRAP PRIMERS. TRAP PRIMER BRANCH TAKEOFF SHALL BE FROM TOP OF MAIN DISTRIBUTION PIPE.
8. INSULATE P-TRAPS EXPOSED IN UNHEATED SPACES.
9. SEE ARCHITECTURAL DRAWINGS FOR PLUMBING FIXTURE ROUGH-IN DIMENSIONS AND OTHER DETAILS. ALSO SEE ARCHITECTURAL DRAWINGS FOR FINISH REQUIREMENTS OF ALL PLUMBING FIXTURES INCLUDING REQUIREMENTS FOR FLUSH LEVER LOCATION AT ADA COMPLIANT TOILETS AND VALVE LOCATIONS OF ADA SHOWERS. REPORT ALL DISCREPANCIES TO ENGINEER PRIOR TO ANY WORK.
10. REFER TO ARCHITECTURAL DRAWING FOR ROOM ELEVATIONS. LOCATE PLUMBING FIXTURES AT HEIGHTS SHOWN ON ARCHITECTURAL ROOM ELEVATIONS.
11. PLUMBING DRAWINGS SHOW APPROXIMATE LOCATIONS OF PLUMBING FIXTURES. REFER TO ARCHITECTURAL PLANS FOR EXACT LOCATIONS. COORDINATE FLOOR DRAINS FOR MECHANICAL SPACES WITH MECHANICAL EQUIPMENT BEING SERVED.
12. REFER TO ARCHITECTURAL AND STRUCTURAL DRAWINGS FOR GENERAL CONSTRUCTION INCLUDING CONCRETE EQUIPMENT PADS, FLASHING DETAILS, ETC.
13. REFER TO ELECTRICAL DRAWINGS FOR ADDITIONAL ELECTRICAL CHARACTERISTICS OF PLUMBING EQUIPMENT (VOLTAGES, ETC.).
14. ELECTRICAL CHARACTERISTICS OF LISTED EQUIPMENT SHALL BE VERIFIED BY CONTRACTOR DURING SUBMITTAL PROCESS. ANY ELECTRICAL CHARACTERISTICS THAT DEVIATE FROM THOSE LISTED SHALL BE IDENTIFIED BY THE CONTRACTOR, SUBMITTED TO THE ENGINEER FOR APPROVAL AND COORDINATED WITH DIVISION 26 ELECTRICAL PRIOR TO INSTALLATION OF EQUIPMENT AS REQUIRED TO PROPERLY SERVE EQUIPMENT.
15. SECURE WATER HEATERS AND STORAGE TANKS AND PLUMBING EQUIPMENT TO STRUCTURE AS REQUIRED BY CODE. REFER TO THE STRUCTURAL DRAWINGS FOR ADDITIONAL SPECIAL REQUIREMENTS RELATED TO THE PLUMBING INSTALLATION.
16. PROVIDE PLUMBING ANCHORAGE AND EXPANSION EVERY 100' PIPE LENGTH PER CODE.
17. ACCESS PANELS ARE REQUIRED AT ALL CONCEALED VALVES AND EQUIPMENT. COORDINATE LOCATION AND SIZE WITH ARCHITECT.
18. STUB OUT TO SITE SERVICES 5' OUTSIDE BUILDING FOUNDATION. PIPE SIZE, FIXTURE UNITS, AREA DRAINED INVERT ELEVATION, SIZES, AND SQUARE FOOTAGES AS INDICATED. NOTIFY ENGINEER OF ANY DISCREPANCIES PRIOR TO COMMENCING WORK.
19. INSULATE HORIZONTAL RAIN WATER LEADER PIPING FROM ROOF DRAIN TO VERTICAL RISER.
20. INSULATE PIPING PER WSEC C404.6 AND PER DIVISION 22 SPECIFICATIONS (WHICHEVER IS GREATER).
21. GENERALLY DUCTWORK PLANNED TO BE TIGHT TO STRUCTURE WITH PIPING BELOW DUCTWORK AND BETWEEN LIGHT FIXTURES. ADJUST AS NECESSARY.
22. PIPING INSTALLED ADJACENT TO ELECTRICAL CABLE TRAYS SHALL ALLOW MINIMUM ACCESS OF 6" IF RUNNING PARALLEL AND ABOVE CABLE TRAYS, ALLOW 18" TO THE SIDE OF CABLE TRAYS.
23. COORDINATE LOCATIONS OF PLUMBING EQUIPMENT TO PROVIDE CLEARANCES OVER LIGHTING FIXTURES FOR REMOVAL AND SERVICE ACCESS DUE TO EQUIPMENT MAINTENANCE.
24. REFER TO PIPING DIAGRAMS AND DETAILS FOR REQUIRED FITTINGS, VALVES, ETC. FLOOR PLANS AND SECTIONS INDICATE EQUIPMENT LOCATIONS AND GENERAL PIPE ROUTING ONLY.
25. PROVIDE FABRICATED STEEL MEMBER SUPPORTS AS REQUIRED BY MANUFACTURER'S INSTALLATION INSTRUCTIONS, AS INDICATED ON DRAWINGS, OR IN SPECIFICATIONS FOR INSTALLATION OF EQUIPMENT. REQUIRED STRUCTURAL MEMBERS, BOLTS, AND WELDS SHALL BE IN ACCORDANCE WITH AMERICAN INSTITUTE OF STEEL CONSTRUCTION (AISC) MANUAL.
26. IF REQUIRED FOR INSTALLATION OF PIPES AND EQUIPMENT, PROVIDE ADDITIONAL STRUCTURAL MEMBERS BETWEEN COLUMNS, JOISTS, AND STRUCTURAL FRAME TO MEET SUPPORT REACTIONS (FORCES, MOMENTS, DEFLECTIONS). STRUCTURAL MEMBERS SHALL BE DESIGNED BY A REGISTERED PROFESSIONAL ENGINEER.
27. DO NOT CORE DRILL OR DRILL THROUGH BEAMS, COLUMNS, AND SHEAR WALLS, UNLESS INDICATED ON STRUCTURAL DRAWINGS OR AS APPROVED BY THE STRUCTURAL ENGINEER.
28. PIPES INDICATED WITHOUT DIMENSIONS SHALL BE SIZED PER PRECEDING UPSTREAM PIPE SECTIONS.
29. DRAWINGS ARE SCHEMATIC IN SOME AREAS AND MAY NOT SHOW PIPING OFFSETS WHICH MAY BE REQUIRED.
30. WHERE PIPE SIZES ARE NOT SHOWN ON DRAWINGS, SIZE PIPING PER THE UNIFORM PLUMBING CODE.
31. PRIOR TO SUBMITTING ALL PLUMBING FIXTURES THE CONTRACTOR SHALL VERIFY COMPATIBILITY OF THE SPECIFIED FIXTURE WITH THE SIZES OF FINISH CABINETRY AS IDENTIFIED IN GENERAL CONTRACTOR'S SHOP DRAWINGS. ANY DISCREPANCIES BETWEEN THE SIZE OF THE FIXTURES SPECIFIED AND THE FINISH CABINETRY SIZES SHALL BE BROUGHT TO THE ATTENTION OF THE ENGINEER IN WRITING BEFORE SUBMITTAL.
32. PLUMBING VENTS SHALL TERMINATE MINIMUM 10' FROM FRESH AIR INTAKES PER CODE.
33. LABEL ALL PIPING SYSTEMS PER THE IMC AND UPC.
34. SUPPORT AND BRACE PIPING SYSTEMS IN ACCORDANCE WITH UPC AND AS REQUIRED IN THE SPECIFICATIONS.
35. ALL MATERIALS IN CONTACT WITH PIPING SYSTEMS SHALL BE COMPATIBLE FOR USE WITH AND FOR CONTACT WITH THE PIPING MATERIAL. CONTRACTORS AND TRADES SHALL VERIFY COMPATIBILITY OF THEIR PRODUCTS WITH THE PIPING SYSTEMS. THIS INCLUDES, BUT IS NOT LIMITED TO, FIRE STOPPING SEALANTS, FIRE STOPPING COLLARS, VIBRATION ISOLATION ELEMENTS, THERMAL INSULATION, EXPANSION JOINTS AND ANY MATERIAL IN CONTACT WITH PIPES.
36. ALL CAST IRON SOIL PIPE AND FITTINGS SHALL BE MARKED WITH THE COLLECTIVE TRADEMARK OF THE CAST IRON SOIL PIPE INSTITUTE (CISPI) AND BE LISTED BY NSF INTERNATIONAL.
37. ROOF MOUNTED PIPING SHALL BE INSTALLED ON FREE FLOATING, PREFABRICATED SUPPORTS SIMILAR TO MIRO MODEL 24-R OR ROOF TOP BLOX ON WALKWAY TREAD PADS. THE USE OF WOOD FOR SUPPORTS IS PROHIBITED.
38. ALL ITEMS IN CONTACT WITH POTABLE WATER SHALL COMPLY WITH THE NATIONAL "REDUCTION OF LEAD IN DRINKING WATER ACT" S.3874.
39. WHERE MANUFACTURERS HAVE RECOMMENDED OR REQUIRED TRAINING PROGRAMS FOR THE INSTALLATION OF THEIR PRODUCT, THEN ALL CONTRACTOR EMPLOYEES INSTALLING THAT PRODUCT SHALL BE TRAINED AND HAVE WRITTEN DOCUMENTATION CONFIRMING THAT TRAINING, AND SHALL FURNISH A COPY OF THE TRAINING DOCUMENTATION WITHIN THE PROJECT SUBMITTAL FOR EACH INSTALLING INDIVIDUAL SHOWING CURRENT INSTALLATION TRAINING WITHIN TWO (2) YEARS OF START OF THIS PROJECT.

ABBREVIATIONS

AAV	AIR ADMITTANCE VALVE
AC	AIR CONDITIONING
ABV	ABOVE
AD	ACCESS DOOR
AFC	ABOVE FINISHED CEILING
AFF	ABOVE FINISHED FLOOR
AFG	ABOVE FINISHED GRADE
AFUE	ANNUALIZED FUEL EFFICIENCY
AHU	AIR HANDLING UNIT
AL	ALUMINUM
APPROX	APPROXIMATELY
ARCH	ARCHITECTURAL
ATMOS	ATMOSPHERE
BATT	BATTERY
BDD	BACK DRAFT DAMPER
BF	BLIND FLANGE
BFC	BELOW FINISHED CEILING
BHP	BRAKE HORSE POWER
BI	BACKWARD INCLINED
BLDG	BUILDING
BOD	BOTTOM OF DUCT
BTU	BRITISH THERMAL UNIT
BTUH	BRITISH THERMAL UNIT PER HOUR
CFM	CUBIC FEET PER MINUTE
CHAR	CHARACTERISTICS
CHEM	CHEMICAL INJECTION
CHWS	CHILLED WATER SUPPLY
CHWR	CHILLED WATER RETURN
CLG	CEILING
CO	CLEAN OUT
CONC	CONCRETE
CONN	CONNECT OR CONNECTION
CPLG	COUPLING
CRD	CEILING RADIATION DAMPER
CRL	COMBINED RAIN LEADER
CS	CARBON STEEL
CSC	CARSEALED CLOSED
CSO	CARSEALED OPEN
CV	CONSTANT VOLUME
CW	COLD WATER
DET	DETAIL
DFU	DRAINAGE FIXTURE UNITS
DIA	DIAMETER
DIM	DIMENSION
DISCH	DISCHARGE
DI	DUCTILE IRON
DMPR	DAMPER
DN	DOWN
DP	DIFFERENTIAL PRESSURE
DR	DRAIN
DWG	DRAWING
EA	EACH
EAT	ENTERING AIR TEMPERATURE
ECC	ECCENTRIC
ECON	ECONOMIZER
EER	ENERGY EFFICIENCY RATIO
EF	EXHAUST FAN
EFF	EFFICIENT, EFFICIENCY
EG	EXHAUST GRILLE
EL	ELEVATION
ELEC	ELECTRICAL
EQUIP	EQUIPMENT
ET	ELECTRIC TRACED
EXIST(E)	EXISTING
EXH	EXHAUST
EXT	EXTERIOR
F	FAHRENHEIT
FCO	FLOOR CLEAN OUT
FD	FIRE DAMPER OR FLOOR DRAIN
FF	FINISHED FLOOR
FLGD	FLANGED
FLR	FLOOR
FLTR	FILTER
FOF	FACE OF FLANGE
FPM	FEET PER MINUTE
FPI	FINS PER INCH
FPTU	FAN POWERED TERMINAL UNIT
FSK	FOIL SKRIM KRAFT LINED DUCT (SPUNSTRAND)
FT	FEET, FOOT
FU	FIXTURE UNITS
FV	FACE VELOCITY
FW	FEED WATER
G	GAS
GALV	GALVANIZED
GEN	GENERATOR
GFI	GROUND FAULT CIRCUIT INTERRUPTER
GPM	GALLONS PER MINUTE
GR	GRILLE
GV	GATE VALVE
GW	GRAY WATER (NON POTABLE)
GWR	GLYCOL WATER RETURN
GWS	GLYCOL WATER SUPPLY
HP	HORSE POWER
HPFS	HIGH POINT FINISHED SURFACE
HR	HOUR
HTG	HEATING
HT	HEIGHT
HVAC	HEATING, VENTILATION AND AIR CONDITIONING
HW	HOT WATER
HWC	HOT WATER CIRCULATING
HWS	HOT WATER HEATING SUPPLY
HWR	HOT WATER HEATING RETURN
IA	INSTRUMENT AIR
ID	INSIDE DIMENSION
IE	INVERT ELEVATION
IH	INSULATION HOT
IN	INCH, INCHES
INFO	INFORMATION
INST	INSTRUMENT
INSUL	INSULATE, INSULATION
INV	INVERT
IRR	IRRIGATION (NON POTABLE)
IU	INDOOR UNIT
JAN	JANITOR
KW	KILOWATT
KWH	KILOWATT HOUR
LAT	LEAVING AIR TEMPERATURE
LBS	POUND
LC	LOCKED CLOSED
LF	INEAL FEET
LL	LANDLORD
LOC	LOCATION
LVG	LEAVING
MA	MEDICAL GAS
	MIXED AIR
MAT	MIXED AIR TEMPERATURE
MATL	MATERIAL
MAX	MAXIMUM
MBH	THOUSAND BRITISH THERMAL UNITS PER HOUR
MCA	MAXIMUM CIRCUIT AMPS
MCC	MOTOR CONTROL CENTER
MECH	MECHANICAL
MED	MEDIUM
MFR	MANUFACTURER
MH	MANHOLE
MIN	MINIMUM, MINUTE
MISC	MISCELLANEOUS
MPG	MEDIUM PRESSURE GAS
MV	MEDICAL VACUUM
N	NORTH, NEUTRAL
NA	NOT APPLICABLE
NC	NORMALLY CLOSED
NG	NATURAL GAS
NIC	NOT IN CONTRACT
NO	NUMBER OR NORMALLY OPEN
NTS	NOT TO SCALE
O2	OXYGEN
OAT	OUTSIDE AIR TEMPERATURE
OA	OUTSIDE AIR
OC	ON CENTER
OCP	OVER CURRENT PROTECTION
OD	OUTSIDE DIMENSION
OPP	OPPOSITE
OSA	OUTSIDE AIR
OV	OUTLET VELOCITY
OU	OUTDOOR UNIT
P	PUMP
PD	PRESSURE DROP
PERF	PERFORATED
PF	PRE FILTER
PH	PHASE
PJ	PUSH ON JOINTS
PLCS	PLACES
PNL	PANEL
POC	POINT OF CONNECTION
PRV	PRESSURE REDUCING VALVE
PS	PIPE SUPPORT
PSV	PRESSURE SAFETY (RELIEF) VALVE
QTY	QUANTITY
R	RELIEF
RA	RETURN AIR
RED	REDUCER
RET	RETURN
REQD	REQUIRED
RG	RETURN GRILLE
RJ	RESTRAINED JOINTS
RR	REMOVE AND RELOCATE
RPM	REVOLUTIONS PER MINUTE
RWL	RAINWATER LEADER
SA	SUPPLY AIR
SCHED	SCHEDULE
SD	SMOKE DETECTOR
SECT	SECTION
SEER	SEASONAL ENERGY EFF. RATIO
SF	SUPPLY FAN
SFD	SMOKE/FIRE DAMPER
SHT	SHEET
S.I.O.	SUPPLIED & INSTALLED BY OWNER/OTHER
SL	SOUND LINING
SP	STATIC PRESSURE
SPEC	SPECIFICATION
SQ	SQUARE
SR	SUPPLY REGISTER
SS	SANITARY SEWER
	STAINLESS STEEL
STA	STATION
STAT	THERMOSTAT
STD	STANDARD
SV	SOLENOID VALVE
SVC	SERVICE
SW	SOCKET WELD
SYS	SYSTEM
TD	TEMPERATURE DIFFERENTIAL
TDH	TOTAL DYNAMIC HEAD
TEMP	TEMPERATURE
	TEMPORARY
THRU	THROUGH
TI	TENANT IMPROVEMENT
TRU	TERMINAL REHEAT UNIT
TSTAT	THERMOSTAT
TYP	TYPICAL
UBC	UNIFORM BUILDING CODE
UG	UNDERGROUND
UL	UNDERWRITER'S LABORATORY
UMC	UNIFORM MECHANICAL CODE
UNO	UNLESS NOTED OTHERWISE
UP	UNIFORM PLUMBING CODE
UPC	UNIFORM PLUMBING CODE
UV	UNIT VENTILATOR
V	VOLT
V/PH/HZ	VOLTS/PHASE/HERTZ
VAC	VOLTS AC
	VACUUM
VAV	VARIABLE AIR VOLUME
VDC	VOLTS DC
VD	VOLUME DAMPER
VEL	VELOCITY
VF	VENTILATION FAN
VFD	VARIABLE FREQUENCY DRIVE
VOL	VOLUME
VTR	VENT THROUGH ROOF
W/	WITH
/O	WITHOUT
W	WASTE
WB	WET BULB
WC	WATER CLOSET
WCO	WALL CLEAN OUT
WG	WATER GAUGE
WHA	WATER HAMMER ARRESTER
WT	WATER TANK
WT	WEIGHT
WTR, W	WATER

STORM PIPING SYSTEMS

- RL — RAIN LEADER (RL)
- OL — OVERFLOW LEADER (OL)
- ST — STORM (BELOW FLOOR)
- ROOF DRAIN
- OVERFLOW DRAIN
- OVERFLOW SCUPPER

PIPING

- FLOW ARROW
- CAP OR CLEANOUT
- PIPE UP OR TEE UP AND DOWN
- PIPE DOWN
- PIPE TEE UP
- PIPE TEE DOWN
- 45° DEGREE ELBOW
- 90° DEGREE ELBOW
- 4 WAY TEE
- TEE
- PIPE BREAK

PIPING SPECIALTIES

- PRESSURE GAGE
- THERMOMETER
- SIGHT GLASS
- VFM-1 — VENTURI FLOW METER
- OFM-1 — ORIFICE FLOW METER
- MANUAL AIR VENT (MAV)
- AV — AUTOMATIC AIR VENT
- GAS PRESSURE REGULATOR
- M — WATER METER
- WYE STAINER
- WYE STAINER WITH CAPPED HOSE END BLOWDOWN VALVE
- CONCENTRIC REDUCER
- FLANGE
- UNION
- ECCENTRIC REDUCER
- F&T — STEAM TRAP, INDICATE TYPE
- HOSE BIB
- HOSE BIBB/WALL HYDRANT
- PIPE ANCHOR
- ALIGNMENT GUIDE
- TS — TEMPERATURE/PRESSURE TEST PORT
- FLEXIBLE CONNECTION IN PIPING
- FUNNEL
- EJ-1 — EXPANSION JOINT

VALVES

- AUTOMATIC BALANCING VALVE
- PRESSURE REGULATING VALVE
- PRESSURE REDUCING VALVE (PRV)
- AUTOMATIC CONTROL VALVE - TWO WAY (ELECTRIC OPERATOR SHOWN)
- AUTOMATIC CONTROL VALVE - THREE WAY (ELECTRIC OPERATOR SHOWN)
- BALL VALVE
- GATE VALVE
- GAS COCK
- RELIEF VALVE
- CHECK VALVE
- BUTTERFLY VALVE
- REDUCED PRESSURE BACKFLOW ASSEMBLY
- MANUAL BALANCING/ MEASURING VALVE
- ANGLE VALVE

WATER PIPING SYSTEMS

- WS — WS — WATER SERVICE
- CWF — COLD WATER FILTERED
- COLD WATER (CW)
- HOT WATER (HW) [120°]
- 140 — HIGH TEMP HOT WATER (140°)
- HOT WATER CIRCULATE (HWC)
- NP — NON POTABLE WATER (NP)
- M — WATER METER

DRAIN WASTE & VENT PIPING

- WASTE (W) [ABOVE FLOOR]
- WASTE (BELOW FLOOR) PIPING
- VENT (V) [ABOVE FLOOR]
- GW — GREASE WASTE (GW)
- GD — GARAGE DRAIN (GD)
- C — CONDENSATE DRAIN (C)
- P — PUMPED WASTE (P)
- FCO — FLOOR CLEANOUT (FCO)
- WCO — WALL CLEANOUT (WCO)
- VTR — VENT THRU ROOF
- FLOOR DRAIN
- FLOOR SINK

COMMERCIAL ENERGY EFFICIENCY
TABLE C403.10.3
MINIMUM PIPE INSULATION THICKNESS (in.) [a]

FLUID OPERATING TEMPERATURE RANGE AND USAGE (°F)	INSULATION CONDUCTIVITY		NOMINAL PIPE OR TUBE SIZE (in.)				
	CONDUCTIVITY Btu*in/(h*ft^2*°F) [b]	MEAN RATING TEMPERATURE, °F	< 1	1 TO < 1 ½	1½ TO < 4	4 TO < 8	>=8
> 350	0.32 - 0.34	250	4.5	5.0	5.0	5.0	5.0
251 - 350	0.29 - 0.32	200	3.0	4.0	4.5	4.5	4.5
201 - 250	0.27 - 0.30	150	2.5	2.5	2.5	3.0	3.0
141 - 200	0.25 - 0.29	125	1.5	1.5	2.0	2.0	2.0
105 - 140	0.21 - 0.28	100	1.0	1.0	1.5	1.5	1.5
40 - 60	0.21 - 0.27	75	0.5	0.5	1.0	1.0	1.0
< 40	0.20 - 0.26	50	0.5	1.0	1.0	1.0	1.5

[a] FOR PIPING SMALLER THAN 1-1/2 INCHES AND LOCATED IN PARTITIONS WITHIN CONDITIONED SPACES, REDUCTION OF THESE THICKNESSES SHALL BE PERMITTED (BEFORE THICKNESS ADJUSTMENT REQUIRED IN FOOTNOTE [b] BUT NOT TO A THICKNESS LESS THAN 1 INCH.

[b] FOR INSULATION OUTSIDE THE SLATED CONDUCTIVITY RANGE, THE MINIMUM THICKNESS (T) SHALL BE DETERMINED AS FOLLOWS:

$T = r\{(1 + t/r)^{(K/k)} - 1\}$

WHERE:
T = MINIMUM INSULATION THICKNESS
r = ACTUAL OUTSIDE RADIUS OF PIPE
t = INSULATION THICKNESS LISTED IN THE TABLE FOR APPLICABLE FLUID TEMPERATURE AND PIPE SIZE
K = CONDUCTIVITY OF ALTERNATE MATERIAL AT MEAN RATING TEMPERATURE INDICATED FOR THE APPLICABLE FLUID TEMPERATURE (Btu*in/h*ft^2*°F)
k = THE UPPER VALUE OF THE CONDUCTIVITY RANGE LISTED IN THE TABLE FOR THE APPLICABLE FLUID TEMPERATURE.

[c] FOR DIRECT-BURIED HEATING AND HOT WATER SYSTEM PIPING, REDUCTION OF THESE THICKNESSES BY 1-1/2 INCHES (38mm) SHALL BE PERMITTED (BEFORE THICKNESS ADJUSTMENT REQUIRED IN FOOTNOTE [b] BUT NOT TO THICKNESSES LESS THAN 1 INCH (25mm)).

NOTE: PER WSEC 404.7.3.1, PIPE INSULATION FOR HEATED WATER CIRCULATION SYSTEMS, BOTH SUPPLY AND RETURN PIPE INSULATION SHALL BE AT MINIMUM 1.0 INCHES THICKER THAN THAT REQUIRED BY TABLE C403.10.3

PLUMBING LEGEND

SYMBOL DESCRIPTION

- NORTH — NORTH ARROW
- A / M201 — SECTION IDENTIFICATION; SHEET IDENTIFICATION
- 1 — SHEET NOTES
- 1 — W&V RISER CALLOUT
- 101 — DW RISER CALLOUT
- WC-1 — PLUMBING FIXTURE TAG
- EWH-1 — PLUMBING EQUIPMENT TAG
- 1 — REVISION CALLOUT
- REVISION BUBBLE
- ? / ? — DETAIL NUMBER; SHEET IDENTIFICATION
- A / 6 — COLUMN GRID SYMBOLS
- 1 — GENERAL MECHANICAL NOTES NUMBER IDENTIFICATION
- 1 — FLAG MECHANICAL NOTES NUMBER IDENTIFICATION
- EXISTING WORK OR BACKGROUND INFORMATION (LIGHT LINE)
- NEW WORK (HEAVY LINE)
- PMP-1 — TYPICAL EQUIPMENT DESIGNATION (PUMP)
- POINT OF CONNECTION TO EXISTING

PROJECT INFORMATION

STREET ADDRESS:
111 5TH ST SE
PUYALLUP, WA 98372

REFERENCE CODES - WA

IBC	INTERNATIONAL BUILDING CODE - 2021
IMC	INTERNATIONAL MECHANICAL CODE - 2021
UPC	UNIFORM PLUMBING CODE - 2021
IFGC	INTERNATIONAL FUEL GAS CODE - 2021
IFC	INTERNATIONAL FIRE CODE - 2021
IEC	INTERNATIONAL ELECTRICAL CODE - 2021
WSEC	WASHINGTON STATE ENERGY CODE - 2021
ADA	AMERICAN DISABILITY ACT STANDARDS - 2010
ASME	AMERICAN SOCIETY OF MECHANICAL ENGINEERS - A17.1 - 2007 W/ 2008 ADDENDA SAFETY CODE FOR ELEVATORS AND ESCALATORS
NFPA	NATIONAL FIRE PROTECTION ASSOCIATION STANDARDS 13D, 13R, OR 13 (AS APPLICABLE) - 2016

SCOPE NARRATIVE

BUILDING NARRATIVE:
NEW 4,122 SF SELF STORAGE FACILITY WITH 4 UNITS.

SCOPE NARRATIVE:
PLUMBING DESIGN CONSISTS OF (4) RESTROOMS EACH WITH WATER CLOSET AND LAVATORY SINK, (2) INTERNAL ROOF DRAINS WITH OVERFLOW DRAINS. WATER SERVICE ROOM WITH BACKFLOW PREVENTER, HUB DRAIN AND FLOOR DRAIN. HOSE BIBS WILL BE LOCATED PER OWNER PREFERENCES.

INCLUDED SYSTEMS:
DOMESTIC WATER
WASTE & VENT
RAIN LEADERS

PLUMBING SHEET INDEX

SHEET NUMBER	SHEET TITLE
P0.01	PLUMBING COVER SHEET
P0.02	PLUMBING SCHEDULES AND CALCULATIONS
P0.03	PLUMBING DETAILS
P1.00	PLUMBING PLAN - UNDERGROUND
P2.01	PLUMBING PLAN - LEVEL 1
P2.02	PLUMBING PLAN - LEVEL 2 - MEZZANINE
P2.03	PLUMBING PLAN - ROOF
P4.01	PLUMBING RISER DIAGRAMS

HV Engineering, Inc.
Consulting Engineers
Hall Creek Office Park
6912 220th St. SW, Suite 303
Mountlake Terrace, WA 98043

Phone: (206) 706-9669
www.hvengineering.biz

Project
PUYALLUP STORAGE

Location
111 5TH ST SE
PUYALLUP, WA 98372

Prepared For
SAMANTHA KEIMIG

1113 27th St Pl NW
Puyallup, WA 98371
(360) 631-6019
samantha.n.keimig@gmail.com

THESE DRAWINGS WERE DEVELOPED FOR EXCLUSIVE USE BY SAMANTHA KEIMIG ON A DESIGN BUILD CONCEPT. THEY ARE TO BE USED ONLY WITH WRITTEN PERMISSION OF SAMANTHA KEIMIG. FOR INFORMATION CONTACT: SAMANTHA KEIMIG.

NO.	DATE	REVISION
-	-	-
-	-	-
-	-	-
-	-	-
-	-	-

PARTNER IN CHARGE
DJ
PROJECT MANAGER
DJ
PROJECT ENGINEER
BWR
PROJECT TEAM MEMBERS
CEY, DJ
CHECK
BWR

ENGINEERS SEAL

2024-12-16

TITLE
PLUMBING COVER SHEET

PROJECT NO.
2024-126

DATE
DECEMBER 16, 2024

SHEET NUMBER
P0.01

PERMIT DOCUMENT

REUSE OF DOCUMENTS	VERIFY SCALE
THIS DOCUMENT, AND THE IDEAS AND DESIGNS INCORPORATED HERIN, AS AN INSTRUMENT OF PROFESSIONAL SERVICE, IS THE PROPERTY OF HV ENGINEERING, INC. AND IS NOT TO BE USED, IN WHOLE OR IN PART, FOR ANY OTHER PROJECT WITHOUT THE WRITTEN AUTHORIZATION OF HV ENGINEERING.	BAR MEASURES ONE INCH ON ORIGINAL DRAWING. 0" 1" IF NOT ONE INCH ON THIS DRAWING, ADJUST SCALES ACCORDINGLY.

COPYRIGHT, HV ENGINEERING, INC.

PLUMBING CALCULATIONS

2021 UPC PLUMBING CODE	PER TABLE 702.1 AND TABLE A-103.1							
BUILDING SUMMARY	MIN. SIZE TRAP/ARM		DOMESTIC WATER WSFU				SEWER DFU	
FIXTURE TYPE	IN.	QTY	PER FIXTURE	TOTAL	HW PER FIXTURE	TOTAL HW	PER FIXTURE	TOTAL
HOSE BIBB	--	1	2.5	2.5	--	--	--	--
HOSE BIBB (EACH ADDITIONAL)	--	1	1	1	--	--	--	--
LAVATORY, SINGLE	1.25	4	1	4	0.75	3	1	4
WATER CLOSETS	--	--	--	--	--	--	--	--
1.6 GPF GRAVITY & FLUSHOMETER TANK, PUBLIC	3	4	2.5	10	--	--	4	16
	TOTALS	15		17.5		3		20
TOTAL BUILDING FIXTURE CALCULATIONS				17.5		3		20
USE 3/4" METER WITH 1-1/4" BUILDING SUPPLY								

2021 UPC APPENDIX A WATER SERVICE CALCULATIONS

Cold Water Piping to be Sized Based on a FT System (FV=Flush Valve, FT = Flush Tank)

PIPE MAINS	FIX UNIT	GPM	SIZE
BUILDING SUPPLY	18	12	1-1/4"

STATIC WATER PRESSURE (PSI)	60.0	ESTIMATE - TO BE DETERMINED BY GC. NOTIFY ENGINEER IF LOWER				
PIPE LOSS BETWEEN MAIN AND METER (PSI)	3.6	16.00	FT OF	0.75	IN DIA. PIPE I.D.	22.4 PSI/100' LOSS
WATER PRESSURE AT METER (PSI)	56.4					
METER LOSS (PSI)	1.4	0.75	DIAMETER METER			
PIPE LOSS BETWEEN METER AND BLDG (PSI)	0.9	50.00	FT OF	1.25	IN DIA. PIPE	1.9 PSI/100' LOSS
BACKFLOW PRESSURE LOSS	14.0					
WATER PRESSURE AT BUILDING (PSI)	40.0	If meter pressure less BFP loss exceeds 80PSI, PRV required				
BLDG SUPPLY PRESSURE FOR PIPE SIZING:	40.0					

COLD WATER PRESSURE LOSS:			
ELEVATION CHANGE (PSI)	4.3	10	FEET AT 0.433 PSI/FT
MIN. RESIDUAL PRESS. AT REMOTE FIXT. (PSI)	30.0	(TYPICALLY PROVIDE 25 PSIG + 5 PSIG FOR TXV)	
TOTAL PRESSURE LOSS:	34.3		
	40.0		
	- 34.3		
AVAILABLE PRESSURE (PSI)	5.7		
LONGEST PIPE RUN (FT)	75.0	5.71 X 100 FT	
X 1.25 (FITTINGS) 1.25	93.8	94 FT	

Friction Loss Not to Exceed 6.1 PSI/100FT LOSS

Size All Piping Based on a Friction loss of: 6 PSI/100FT LOSS

and max velocity based on installation standard.

DOMESTIC WATER PIPE SIZING TABLE

WSFU BASED ON 2021 UPC CHART A103.1(1)

PIPE MATERIAL	
PEX	
FLUSH TANK	
VELOCITY <= 8 FPS	CW + HW

PSI/100 FT	6	
WSFU RANGE	MIN	MAX
PIPE SIZE (")		
1/2	0	2
3/4	3	6
1	7	13
1 1/4	14	22
1 1/2	23	40
2	41	130

COPYRIGHT HV ENGINEERING

ELECTRIC WATER HEATER SCHEDULE

EQUIPMENT NUMBER		EWH-1
SERVICE		
	LOCATION	POINT-OF-USE LAVATORIES
	SYSTEM	DOMESTIC HOT WATER
	FUNCTION	DOMESTIC WATER HEATING
	SCOPE	COMMERCIAL
CAPACITY		
	TEMPERATURE RISE @ 0.3 GPM	80 °F
	TEMPERATURE RISE @ 0.5 GPM	48 °F
SERVICE CONDITIONS		--
	LVG WATER TEMP-DEG F	105 °F
ELECTRICAL		
	TOTAL KW	3.5
	VOLTAGE	120
MANUFACTURER / DESIGN BASIS		
	MAKE	ACCUMIX II
	MODEL	AM004120T
	SHIPPING WEIGHT (LBS)	5.5
	INLET/OUTLET (INCHES)	3/8"
	DIMENSIONS (INCHES)	14.5"H X 5.25"W X 4"D
NOTES		COORDINATE WITH ELECTRIC ON POWER REQUIREMENTS PRIOR TO PROCUREMENT

MISCELLANEOUS PLUMBING EQUIPMENT SCHEDULE

SYMBOL	ITEM	MAKE/MODEL	REMARKS
DRAINS			
FD-1	FLOOR DRAIN (FD) (SIZE PER PLANS)	SEE CONTRACTOR SUBMITTAL	MEDIUM DUTY. 8-1/2" ROUND CAST IRON GRATE. SIZE PER PLAN.
HD-1	HUB DRAIN	FIELD FABRICATE	SIZE PER PLANS.
RD-1	PRIMARY ROOF DRAIN	SEE CONTRACTOR SUBMITTAL	3" ALUMINUM DOME GRATE
OD-1	OVERFLOW DRAIN	SEE CONTRACTOR SUBMITTAL	SET RIM 2" ABOVE PRIMARY DRAIN RIM
DN-1	DOWNSPOUT NOZZLE	SEE CONTRACTOR SUBMITTAL	STORM OUTLET
HOSE BIBS AND HYDRANTS			
HB-1	HOSE BIB	SEE CONTRACTOR SUBMITTAL	FROST FREE
BACKFLOW PREVENTERS			
RPBP-1	1-1/4" REDUCED PRESSURE ZONE BACKFLOW PREVENTER	ZURN 375XL	NSF 61 CERTIFIED

PLUMBING FIXTURE SCHEDULE

SYMBOL	ITEM	WASTE	VENT	CW	HW	SPECIFICATION	REMARKS
REIDENTIAL FIXTURES:							
L-1	LAVATORY	1-1/2	1-1/2	1/2	1/2	SEE CONTRACTOR SUBMITTAL	0.5 GPM MAX.
L-2A	LAVATORY (ADA)	1-1/2	1-1/2	1/2	1/2	SEE CONTRACTOR SUBMITTAL	0.5 GPM MAX. INSTALL PER ADA
WC-1	WATER CLOSET	3	2	1/2	-	SEE CONTRACTOR SUBMITTAL	1.28 GPF MAX; FLUSH TANK WATER SENSE
WC-2A	WATER CLOSET (ADA)	3	2	1/2	-	SEE CONTRACTOR SUBMITTAL	1.28 GPF MAX; FLUSH TANK WATER SENSE; INSTALL PER ADA

NOTE: BIDDING CONTRACTOR TO PROVIDE FIXTURE SELECTION FOR OWNER DETERMINATION. VERIFY ALL FIXTURES TO OWNER/ARCH PRIOR TO PROCUREMENT.

PIPING SYSTEM SCHEDULE AND SPECIFICATION

SYSTEM	ABOVE GROUND	BELOW GROUND	JOINT METHOD	REMARKS/PIPE INSULATION
SOIL WASTE	SCH. 40 PVC CAST IRON	SCH. 40 PVC (SOLID CORE)	SOLVENT WELD NO HUB	COORDINATE WITH OWNER ON SPECIFIC PREFERENCES ON PIPE MATERIAL
SOIL VENT	ABS CAST IRON	SCH. 40 PVC (SOLID CORE)	SOLVENT WELD NO HUB	CAST IRON IN PLENUM AREAS; COORDINATE WITH OWNER ON SPECIFIC PREFERENCES ON PIPE MATERIAL
STORM/ RAIN LEADERS	SCH. 40 PVC CAST IRON	SCH. 40 PVC (SOLID CORE)	SOLVENT WELD NO HUB	COORDINATE WITH OWNER ON SPECIFIC PREFERENCES ON PIPE MATERIAL 1" INSULATION OF ALL HORIZONTAL PIPES IN CONDITIONED SPACES OVERFLOW PIPING IS ALLOWED TO BE ABS.
STORM OVERFLOW LEADERS	SCH. 40 PVC/ABS CAST IRON	SCH. 40 PVC (SOLID CORE)	SOLVENT WELD NO HUB	COORDINATE WITH OWNER ON SPECIFIC PREFERENCES ON PIPE MATERIAL 1" INSULATION OF ALL HORIZONTAL PIPES IN CONDITIONED SPACES
COLD WATER 2" AND SMALLER	PEX	PEX	COLD EXPANSION FITTINGS	

NOTES:

[1] SOLVENT CEMENT JOINTS IN ACCORDANCE WITH 2021 UPC SECTION 705.6.2, ASTM F656 FOR PRIMER AND ASTM D2846 FOR SOLVENT CEMENTS.

[2] PEX ALLOWED IN PLENUM IF INSTALLED PER MFR INSTALLION INSTRUCTIONS AS REQUIRED TO COMPLY WITH ASTM E84 FOR A 25/50 FLAME SMOKE RATING.

[3] NSF 61 LISTING COMPLIANCE FOR ALL DOMESTIC WATER PIPE AND FITTINGS.

REUSE OF DOCUMENTS

THIS DOCUMENT, AND THE IDEAS AND DESIGNS INCORPORATED HERIN, AS AN INSTRUMENT OF PROFESSIONAL SERVICE, IS THE PROPERTY OF HV ENGINEERING, INC. AND IS NOT TO BE USED, IN WHOLE OR IN PART, FOR ANY OTHER PROJECT WITHOUT THE WRITTEN AUTHORIZATION OF HV ENGINEERING.

COPYRIGHT, HV ENGINEERING, INC.

VERIFY SCALE

BAR MEASURES ONE INCH ON ORIGINAL DRAWING.

0" 1"

IF NOT ONE INCH ON THIS DRAWING, ADJUST SCALES ACCORDINGLY.

PERMIT DOCUMENT

HV Engineering, Inc.

Consulting Engineers
Hall Creek Office Park
6912 220th St. SW, Suite 303
Mountlake Terrace, WA 98043

Phone: (206) 706-9669
www.hvengineering.biz

Project

PUYALLUP STORAGE

Location

111 5TH ST SE
PUYALLUP, WA 98372

Prepared For

SAMANTHA KEIMIG

1113 27th St Pl NW
Puyallup, WA 98371
(360) 631-6019
samantha.n.keimig@gmail.com

THESE DRAWINGS WERE DEVELOPED FOR EXCLUSIVE USE BY SAMANTHA KEIMIG ON A DESIGN BUILD CONCEPT. THEY ARE TO BE USED ONLY WITH WRITTEN PERMISSION OF SAMANTHA KEIMIG. FOR INFORMATION CONTACT: SAMANTHA KEIMIG.

NO.	DATE	REVISION
-	-	-
-	-	-
-	-	-
-	-	-
-	-	-

PARTNER IN CHARGE: DJ

PROJECT MANAGER: DJ

PROJECT ENGINEER: BWR

PROJECT TEAM MEMBERS: CEY, DJ

CHECK: BWR

ENGINEERS SEAL

BRIAN W. ROETCISOENDER
STATE OF WASHINGTON
30321
REGISTERED
PROFESSIONAL ENGINEER

2024-12-16

TITLE
PLUMBING SCHEDULES AND CALCULATIONS

PROJECT NO. **2024-126**

DATE **DECEMBER 16, 2024**

SHEET NUMBER

P0.02

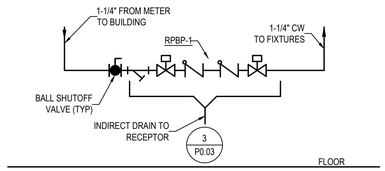

1 DOMESTIC WATER SERVICE DETAIL
SCALE: NONE

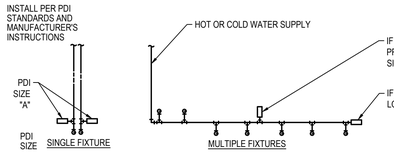

	PIPE SIZE	FIXTURE UNIT LOAD
A	1/2"	1-3
B	3/4"	4-12
C	1"	13-25
D	1-1/4"	26-50
E	1-1/2"	51-85

FIXTURE UNIT TABULATION		
FIXTURE	COLD	HOT
WATER CLOSET	8	--
LAVATORY/HAND SINK	1	1
KITCHEN SINKS	1.5	1.5
MOP BASIN	3	3
URINAL	5	--

PC TO PROVIDE WATER HAMMER ARRESTERS BY SIOUX CHIEF, PRECISION PLUMBING PRODUCTS, WATTS OR APPROVED EQUIVALENT WITH PISTON AND O-RING CONSTRUCTION, HAVING PDI #WH-201, ASSE #1010 AND ANSI #A112.26.1M CERTIFICATION. INSTALL IN HORIZONTAL OR VERTICAL POSITION, BUT NEVER UPSIDE DOWN. INSTALL IN LINE WITH WATER FLOW DIRECTION IF POSSIBLE. SIZE THE UNITS AS SHOWN ON THE DRAWINGS AND/OR PER THE TABLES SHOWN ABOVE.

2 WATER HAMMER ARRESTERS
SCALE: NONE

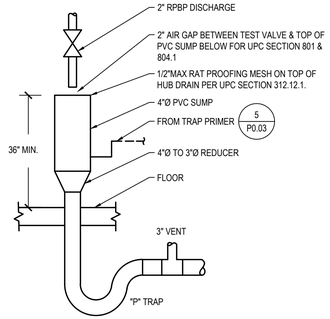

3 RPBP HUB DRAIN DETAIL
SCALE: NONE

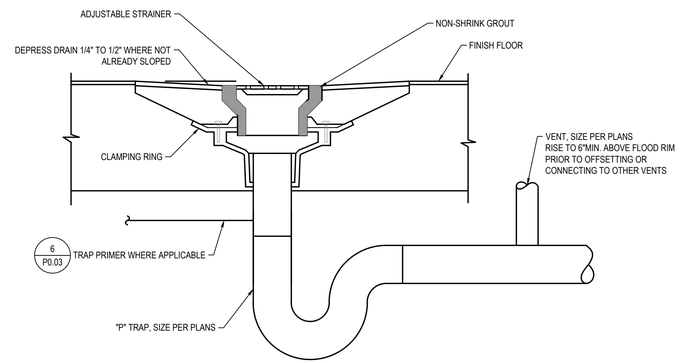

4 FLOOR DRAIN DETAIL
SCALE: NONE

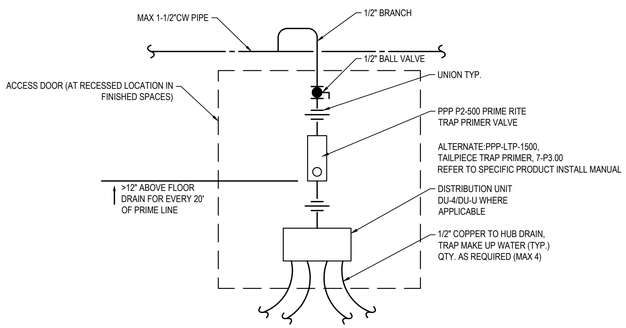

5 HUB DRAIN TRAP PRIMER DETAIL
SCALE: NONE

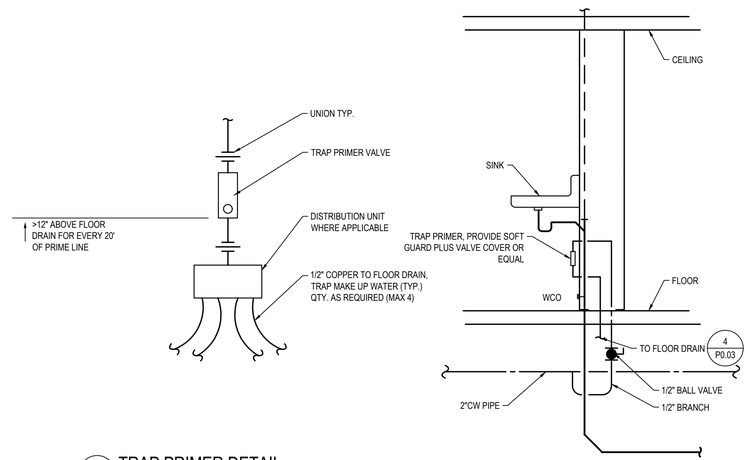

6 TRAP PRIMER DETAIL
SCALE: NONE

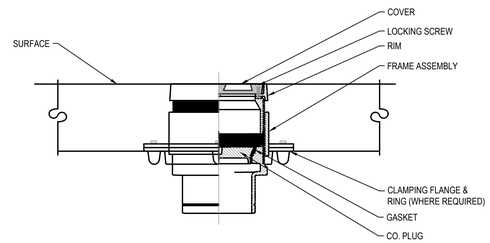

ALL INSIDE FLUSH CLEANOUTS SHALL BE INSTALLED IN SUCH A MANNER THAT THE TOP COVER SHALL BE FLUSH WITH THE SURFACE OF THE WALL OR FINISHED FLOOR.

7 INTERIOR CLEANOUT DETAIL
SCALE: NONE

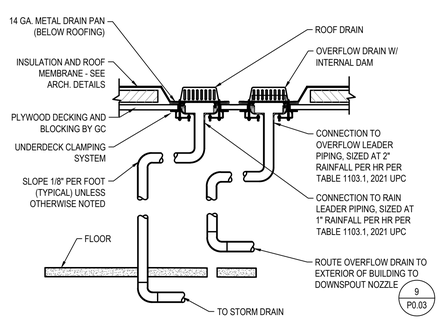

8 ROOF AND OVERFLOW DRAIN DETAIL
SCALE: NONE

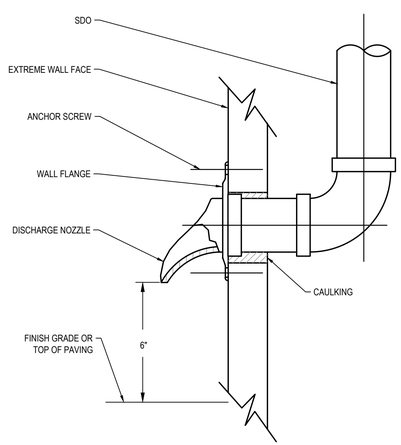

9 DISCHARGED NOZZLE DETAIL
SCALE: NONE

REUSE OF DOCUMENTS	VERIFY SCALE
THIS DOCUMENT, AND THE IDEAS AND DESIGNS INCORPORATED HERIN, AS AN INSTRUMENT OF PROFESSIONAL SERVICE, IS THE PROPERTY OF HV ENGINEERING, INC. AND IS NOT TO BE USED, IN WHOLE OR IN PART, FOR ANY OTHER PROJECT WITHOUT THE WRITTEN AUTHORIZATION OF HV ENGINEERING.	BAR MEASURES ONE INCH ON ORIGINAL DRAWING. 0" 1" IF NOT ONE INCH ON THIS DRAWING, ADJUST SCALES ACCORDINGLY.
COPYRIGHT, HV ENGINEERING, INC.	

PERMIT DOCUMENT

HV Engineering, Inc.
Consulting Engineers
Hall Creek Office Park
6912 220th St. SW, Suite 303
Mountlake Terrace, WA 98043
Phone: (206) 706-9669
www.hvengineering.biz

Project
PUYALLUP STORAGE

Location
111 5TH ST SE
PUYALLUP, WA 98372

Prepared For
SAMANTHA KEIMIG

1113 27th St Pl NW
Puyallup, WA 98371
(360) 631-6019
samantha.n.keimig@gmail.com

THESE DRAWINGS WERE DEVELOPED FOR EXCLUSIVE USE BY SAMANTHA KEIMIG ON A DESIGN BUILD CONCEPT. THEY ARE TO BE USED ONLY WITH WRITTEN PERMISSION OF SAMANTHA KEIMIG. FOR INFORMATION CONTACT: SAMANTHA KEIMIG.

NO.	DATE	REVISION
-	-	-
-	-	-
-	-	-
-	-	-
-	-	-

PARTNER IN CHARGE
DJ
PROJECT MANAGER
DJ
PROJECT ENGINEER
BWR
PROJECT TEAM MEMBERS
CEY, DJ
CHECK
BWR

ENGINEERS SEAL
BRIAN W. ROETCISOENDER
STATE OF WASHINGTON
30321
REGISTERED
PROFESSIONAL ENGINEER
2024-12-16

TITLE
PLUMBING DETAILS

PROJECT NO.
2024-126
DATE
DECEMBER 16, 2024
SHEET NUMBER
P0.03

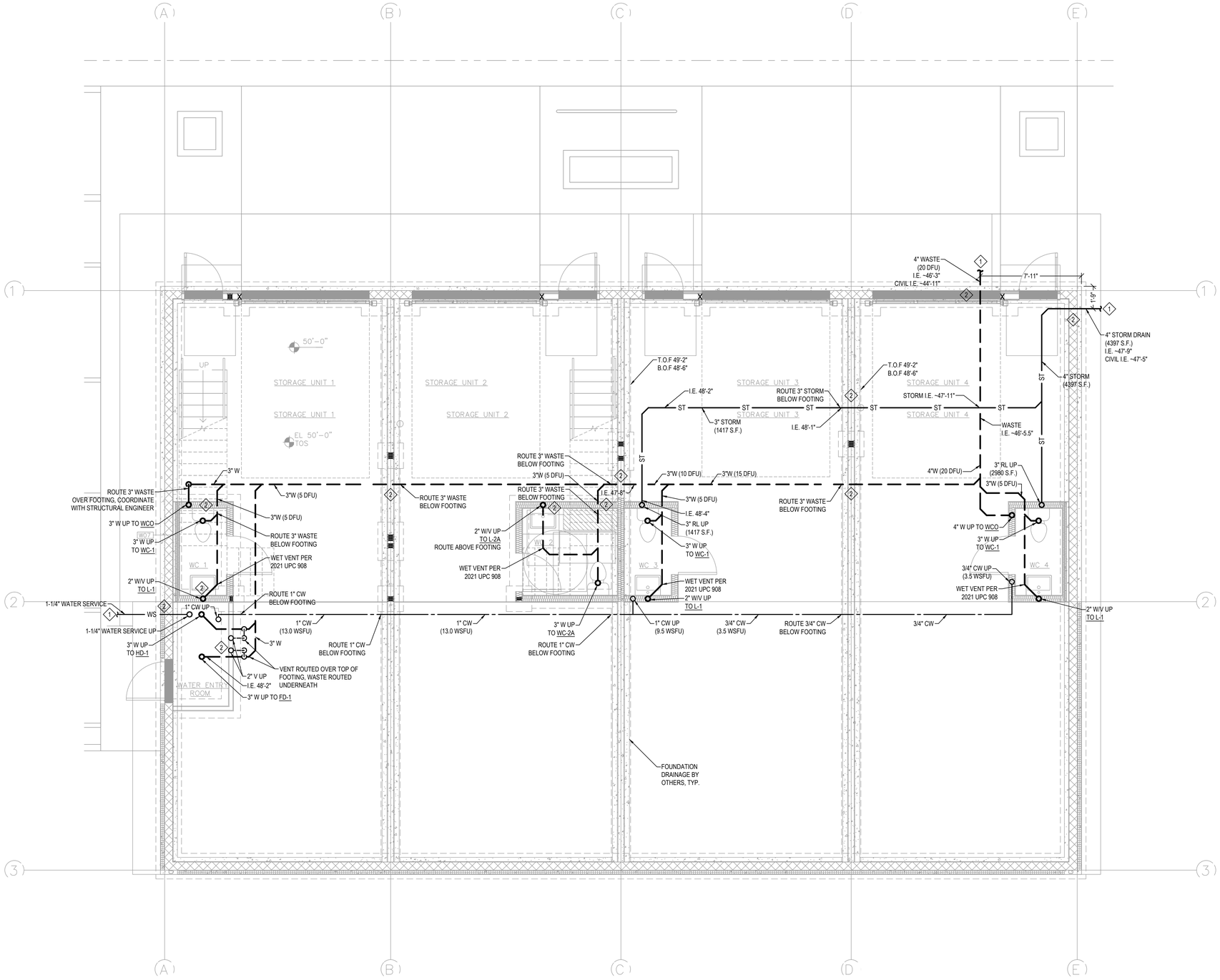

PLUMBING PLAN - UNDERGROUND

SCALE: 1/4" = 1'-0"

GENERAL NOTES:

1. UPSTREAM MH RIM ELEVATION = 49.7'. ALL PLUMBING FIXTURES BELOW THAT ELEVATION ARE REQUIRED TO FLOW THROUGH A BACK WATER VALVE. LEVEL 1 FFE = 50.0'. NO FIXTURES EXIST BELOW UPSTREAM MH RIM ELEVATION, NO BACK WATER VALVE REQUIRED ON SANITARY MAIN.
2. PROVIDE CLEANOUTS PER UPC 707.0.
3. FREEZE PROTECT PIPING AS REQUIRED PER 2021 UPC 312.6. ALL WATER (INCLUDING PUMPED) NOT ON THE WARM SIDE OF INSULATION SHALL BE HEAT TRACED AND INSULATED.
4. ALL SANITARY PIPING SLOPED AT 1/4" PER FOOT UNLESS NOTED OTHERWISE PER 2021 UPC 703.2.
5. ALL STORM PIPING SLOPED AT 1/8" PER FOOT UNLESS NOTED OTHERWISE PER 2021 UPC 1103.2.

SHEET NOTES:

1. COORDINATE FINAL CONNECTIONS WITH CIVIL DRAWINGS FIVE FEET OUTSIDE THE BUILDING FOUNDATION. PIPE SIZE, INVERT DEPTH, FIXTURE UNITS, AND DRAINED AREA AS NOTED. IDENTIFY ANY DISCREPANCIES TO ENGINEER BEFORE COMMENCING WORK.
2. COORDINATE PLUMBING CROSSINGS AND PENETRATIONS WITH STRUCTURAL AT FOOTINGS. PER STRUCTURAL ENGINEER PREFERENCE IS TO ROUTE BELOW WHERE POSSIBLE, AND SLEEVE WHERE NOT POSSIBLE. COORDINATE WITH STRUCTURAL ENGINEER ON REQUIREMENTS.

HV Engineering, Inc.

Consulting Engineers
Hall Creek Office Park
6912 220th St. SW, Suite 303
Mountlake Terrace, WA 98043

Phone: (206) 706-9669
www.hvengineering.biz

Project

PUYALLUP STORAGE

Location

111 5TH ST SE
PUYALLUP, WA 98372

Prepared For

SAMANTHA KEIMIG

1113 27th St Pl NW
Puyallup, WA 98371
(360) 631-6019
samantha.n.keimig@gmail.com

THESE DRAWINGS WERE DEVELOPED FOR EXCLUSIVE USE BY SAMANTHA KEIMIG ON A DESIGN BUILD CONCEPT. THEY ARE TO BE USED ONLY WITH WRITTEN PERMISSION OF SAMANTHA KEIMIG. FOR INFORMATION CONTACT: SAMANTHA KEIMIG.

NO.	DATE	REVISION
-	-	-
-	-	-
-	-	-
-	-	-
-	-	-
-	-	-

PARTNER IN CHARGE
DJ

PROJECT MANAGER
DJ

PROJECT ENGINEER
BWR

PROJECT TEAM MEMBERS
CEY, DJ

CHECK
BWR

ENGINEERS SEAL

2024-12-16

TITLE
PLUMBING PLAN - UNDERGROUND

PROJECT NO.
2024-126

DATE
DECEMBER 16, 2024

SHEET NUMBER
P1.00

PERMIT DOCUMENT

REUSE OF DOCUMENTS	VERIFY SCALE
THIS DOCUMENT, AND THE IDEAS AND DESIGNS INCORPORATED HERIN, AS AN INSTRUMENT OF PROFESSIONAL SERVICE, IS THE PROPERTY OF HV ENGINEERING, INC. AND IS NOT TO BE USED, IN WHOLE OR IN PART, FOR ANY OTHER PROJECT WITHOUT THE WRITTEN AUTHORIZATION OF HV ENGINEERING.	BAR MEASURES ONE INCH ON ORIGINAL DRAWING. 0" 1" IF NOT ONE INCH ON THIS DRAWING, ADJUST SCALES ACCORDINGLY.

COPYRIGHT, HV ENGINEERING, INC.

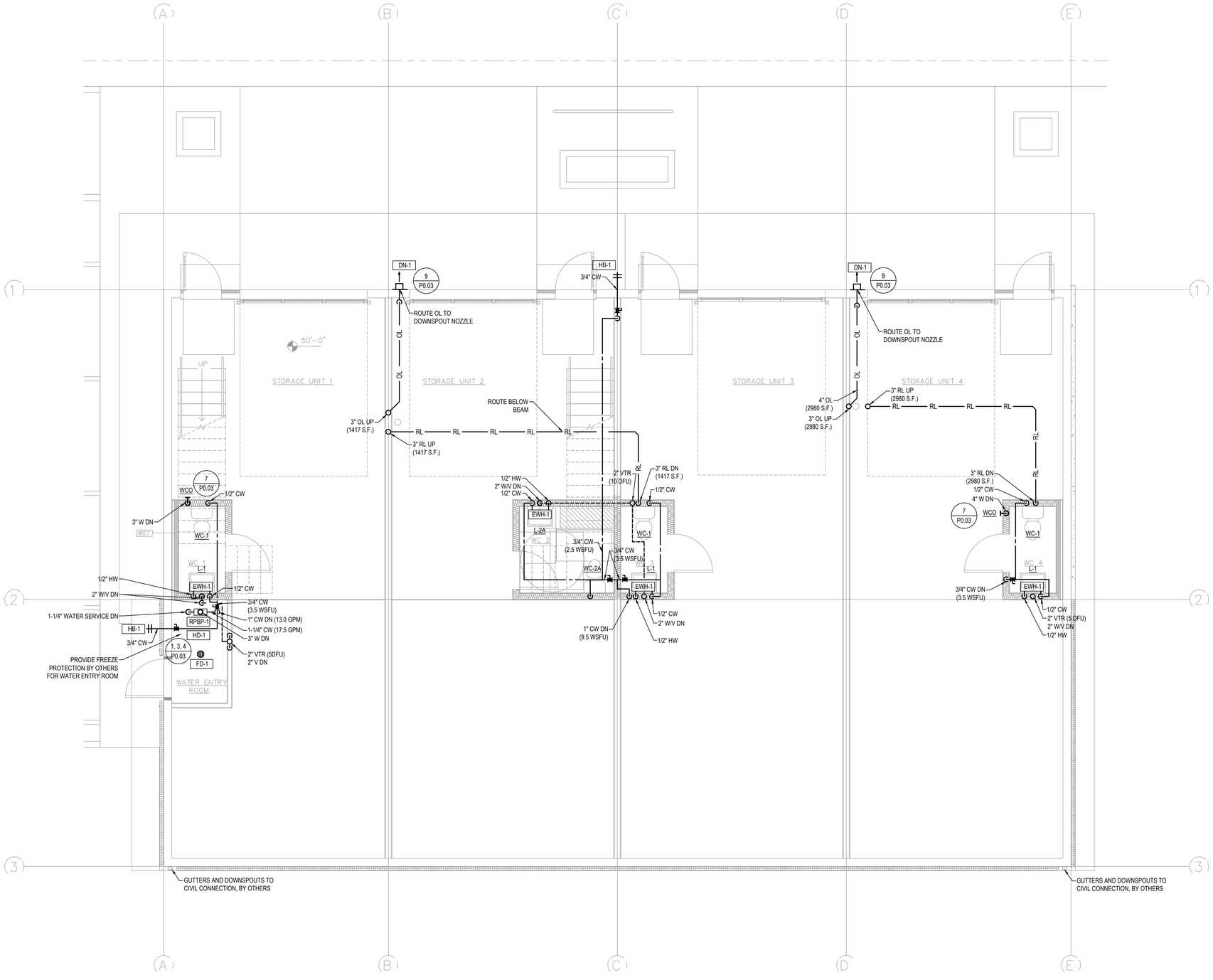

PLUMBING PLAN - LEVEL 1

SCALE: 1/4" = 1'-0"

GENERAL NOTES:

1. UPSTREAM MH RIM ELEVATION = 49.7'. ALL PLUMBING FIXTURES BELOW THAT ELEVATION ARE REQUIRED TO FLOW THROUGH A BACK WATER VALVE. LEVEL 1 FFE = 50.0'. NO FIXTURES EXIST BELOW UPSTREAM MH RIM ELEVATION, NO BACK WATER VALVE REQUIRED ON SANITARY MAIN.
2. PROVIDE CLEANOUTS PER UPC 707.0.
3. FREEZE PROTECT PIPING AS REQUIRED PER 2021 UPC 312.6. ALL WATER (INCLUDING PUMPED) NOT ON THE WARM SIDE OF INSULATION SHALL BE HEAT TRACED AND INSULATED.
4. ALL SANITARY PIPING SLOPED AT 1/4" PER FOOT UNLESS NOTED OTHERWISE PER 2021 UPC 703.2.
5. ALL STORM PIPING SLOPED AT 1/8" PER FOOT UNLESS NOTED OTHERWISE PER 2021 UPC 1103.2.

SHEET NOTES:

1. COORDINATE FINAL CONNECTIONS WITH CIVIL DRAWINGS FIVE FEET OUTSIDE THE BUILDING FOUNDATION. PIPE SIZE, INVERT DEPTH, FIXTURE UNITS, AND DRAINED AREA AS NOTED. IDENTIFY ANY DISCREPANCIES TO ENGINEER BEFORE COMMENCING WORK.

REUSE OF DOCUMENTS	VERIFY SCALE
THIS DOCUMENT, AND THE IDEAS AND DESIGNS INCORPORATED HERIN, AS AN INSTRUMENT OF PROFESSIONAL SERVICE, IS THE PROPERTY OF HV ENGINEERING, INC. AND IS NOT TO BE USED, IN WHOLE OR IN PART, FOR ANY OTHER PROJECT WITHOUT THE WRITTEN AUTHORIZATION OF HV ENGINEERING. COPYRIGHT, HV ENGINEERING, INC.	BAR MEASURES ONE INCH ON ORIGINAL DRAWING. 0" 1" IF NOT ONE INCH ON THIS DRAWING, ADJUST SCALES ACCORDINGLY.

HV Engineering, Inc.

Consulting Engineers
Hall Creek Office Park
6912 220th St. SW, Suite 303
Mountlake Terrace, WA 98043

Phone: (206) 706-9669
www.hvengineering.biz

Project

PUYALLUP STORAGE

Location

111 5TH ST SE
PUYALLUP, WA 98372

Prepared For

SAMANTHA KEIMIG

1113 27th St Pl NW
Puyallup, WA 98371
(360) 631-6019
samantha.n.keimig@gmail.com

THESE DRAWINGS WERE DEVELOPED FOR EXCLUSIVE USE BY SAMANTHA KEIMIG ON A DESIGN BUILD CONCEPT. THEY ARE TO BE USED ONLY WITH WRITTEN PERMISSION OF SAMANTHA KEIMIG. FOR INFORMATION CONTACT: SAMANTHA KEIMIG.

NO.	DATE	REVISION
-	-	-
-	-	-
-	-	-
-	-	-
-	-	-
-	-	-

PARTNER IN CHARGE: DJ
PROJECT MANAGER: DJ
PROJECT ENGINEER: BWR
PROJECT TEAM MEMBERS: CEY, DJ
CHECK: BWR

ENGINEERS SEAL

BRIAN W. ROETCISOENDER — STATE OF WASHINGTON — 30321 — REGISTERED PROFESSIONAL ENGINEER

2024-12-16

TITLE: **PLUMBING PLAN - LEVEL 1**

PROJECT NO. **2024-126**

DATE **DECEMBER 16, 2024**

SHEET NUMBER **P2.01**

PERMIT DOCUMENT

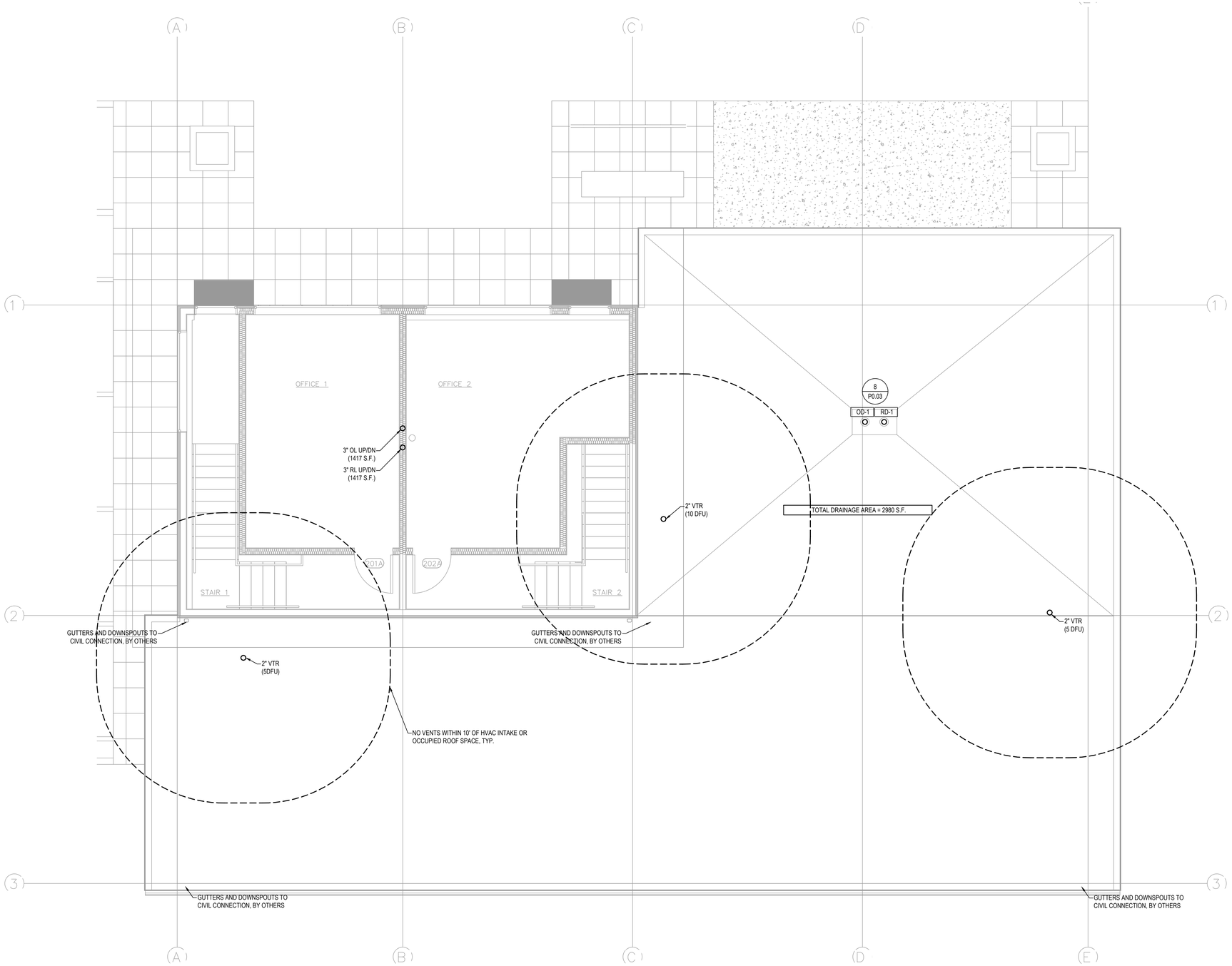

PLUMBING PLAN - LEVEL 2 - MEZZANINE

SCALE: 1/4" = 1'-0"

GENERAL NOTES:

1. FREEZE PROTECT PIPING AS REQUIRED PER 2021 UPC 312.6. ALL WATER (INCLUDING PUMPED) NOT ON THE WARM SIDE OF INSULATION SHALL BE HEAT TRACED AND INSULATED.

2. ALL STORM PIPING SLOPED AT 1/8" PER FOOT UNLESS NOTED OTHERWISE PER 2021 UPC 1103.2.

HV Engineering, Inc.

Consulting Engineers
Hall Creek Office Park
6912 220th St. SW, Suite 303
Mountlake Terrace, WA 98043

Phone: (206) 706-9669
www.hvengineering.biz

Project

PUYALLUP STORAGE

Location

111 5TH ST SE
PUYALLUP, WA 98372

Prepared For

SAMANTHA KEIMIG

1113 27th St Pl NW
Puyallup, WA 98371
(360) 631-6019
samantha.n.keimig@gmail.com

THESE DRAWINGS WERE DEVELOPED FOR EXCLUSIVE USE BY SAMANTHA KEIMIG ON A DESIGN BUILD CONCEPT. THEY ARE TO BE USED ONLY WITH WRITTEN PERMISSION OF SAMANTHA KEIMIG. FOR INFORMATION CONTACT: SAMANTHA KEIMIG.

NO.	DATE	REVISION
-	-	-
-	-	-
-	-	-
-	-	-
-	-	-

PARTNER IN CHARGE
DJ

PROJECT MANAGER
DJ

PROJECT ENGINEER
BWR

PROJECT TEAM MEMBERS
CEY, DJ

CHECK
BWR

ENGINEERS SEAL

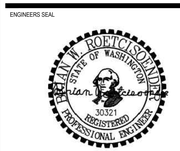

2024-12-16

TITLE
PLUMBING PLAN - LEVEL 2 - MEZZANINE

PROJECT NO.
2024-126

DATE
DECEMBER 16, 2024

SHEET NUMBER
P2.02

PERMIT DOCUMENT

REUSE OF DOCUMENTS	VERIFY SCALE
THIS DOCUMENT, AND THE IDEAS AND DESIGNS INCORPORATED HERIN, AS AN INSTRUMENT OF PROFESSIONAL SERVICE, IS THE PROPERTY OF HV ENGINEERING, INC. AND IS NOT TO BE USED, IN WHOLE OR IN PART, FOR ANY OTHER PROJECT WITHOUT THE WRITTEN AUTHORIZATION OF HV ENGINEERING.	BAR MEASURES ONE INCH ON ORIGINAL DRAWING. 0" 1" IF NOT ONE INCH ON THIS DRAWING, ADJUST SCALES ACCORDINGLY.

COPYRIGHT, HV ENGINEERING, INC.

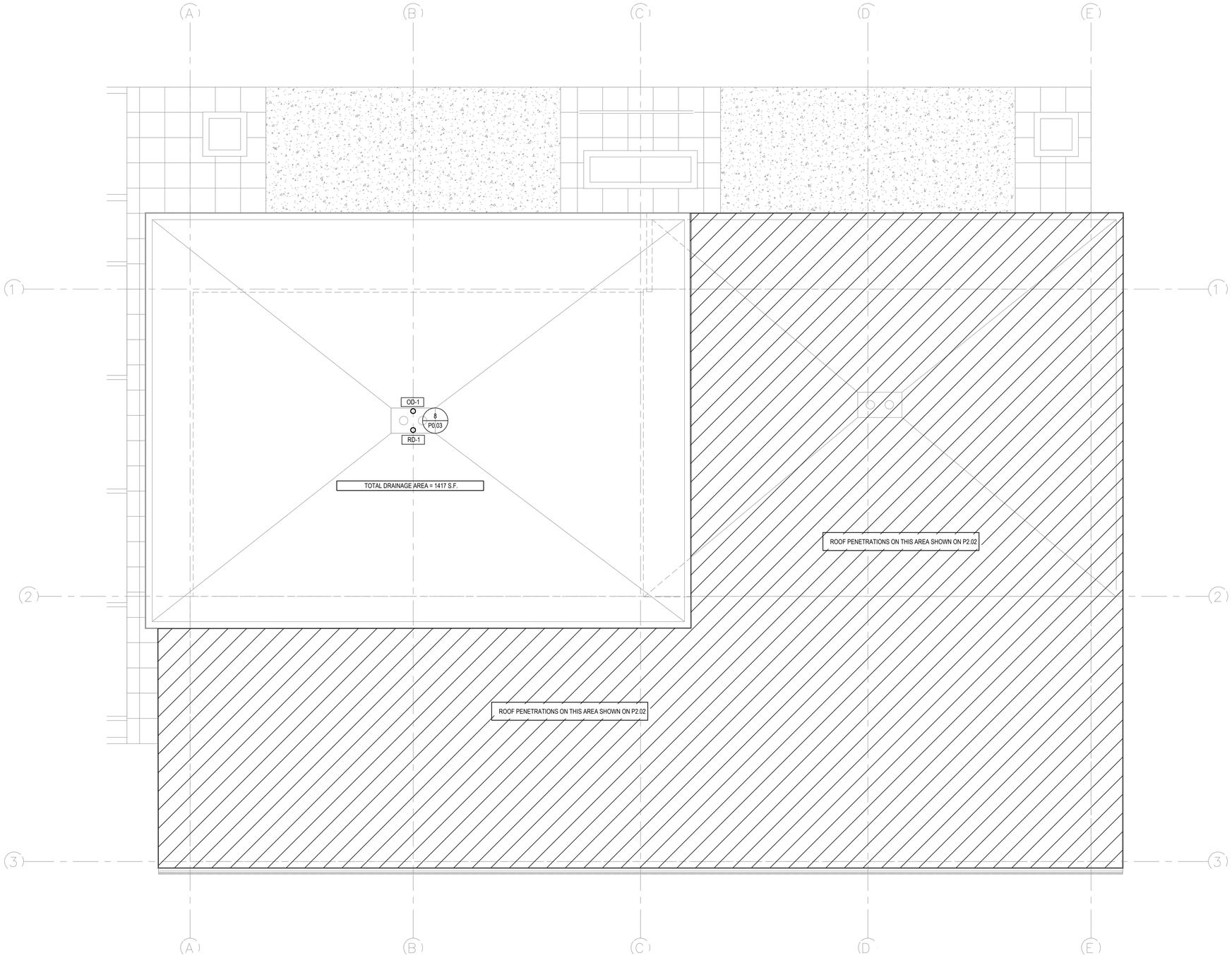

PLUMBING PLAN - ROOF

SCALE: 1/4" = 1'-0"

GENERAL NOTES:

1. FREEZE PROTECT PIPING AS REQUIRED PER 2021 UPC 312.6. ALL WATER (INCLUDING PUMPED) NOT ON THE WARM SIDE OF INSULATION SHALL BE HEAT TRACED AND INSULATED.

2. ALL STORM PIPING SLOPED AT 1/8" PER FOOT UNLESS NOTED OTHERWISE PER 2021 UPC 1103.2.

HV Engineering, Inc.

Consulting Engineers
Hall Creek Office Park
6912 220th St. SW, Suite 303
Mountlake Terrace, WA 98043

Phone: (206) 706-9669
www.hvengineering.biz

Project

PUYALLUP STORAGE

Location

111 5TH ST SE
PUYALLUP, WA 98372

Prepared For

SAMANTHA KEIMIG

1113 27th St Pl NW
Puyallup, WA 98371
(360) 631-6019
samantha.n.keimig@gmail.com

THESE DRAWINGS WERE DEVELOPED FOR EXCLUSIVE USE BY SAMANTHA KEIMIG ON A DESIGN BUILD CONCEPT. THEY ARE TO BE USED ONLY WITH WRITTEN PERMISSION OF SAMANTHA KEIMIG. FOR INFORMATION CONTACT: SAMANTHA KEIMIG.

NO.	DATE	REVISION
-	-	-
-	-	-
-	-	-
-	-	-
-	-	-

PARTNER IN CHARGE
DJ

PROJECT MANAGER
DJ

PROJECT ENGINEER
BWR

PROJECT TEAM MEMBERS
CEY, DJ

CHECK
BWR

ENGINEERS SEAL

2024-12-16

TITLE
PLUMBING PLAN - ROOF

PROJECT NO.
2024-126

DATE
DECEMBER 16, 2024

SHEET NUMBER
P2.03

PERMIT DOCUMENT

REUSE OF DOCUMENTS	VERIFY SCALE
THIS DOCUMENT, AND THE IDEAS AND DESIGNS INCORPORATED HERIN, AS AN INSTRUMENT OF PROFESSIONAL SERVICE, IS THE PROPERTY OF HV ENGINEERING, INC. AND IS NOT TO BE USED, IN WHOLE OR IN PART, FOR ANY OTHER PROJECT WITHOUT THE WRITTEN AUTHORIZATION OF HV ENGINEERING.	BAR MEASURES ONE INCH ON ORIGINAL DRAWING. 0" 1" IF NOT ONE INCH ON THIS DRAWING, ADJUST SCALES ACCORDINGLY.

COPYRIGHT, HV ENGINEERING, INC.

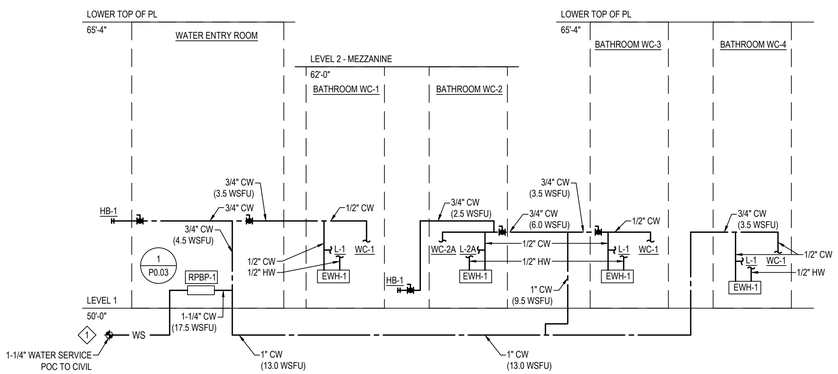

1 WATER RISER DIAGRAM
SCALE: NONE

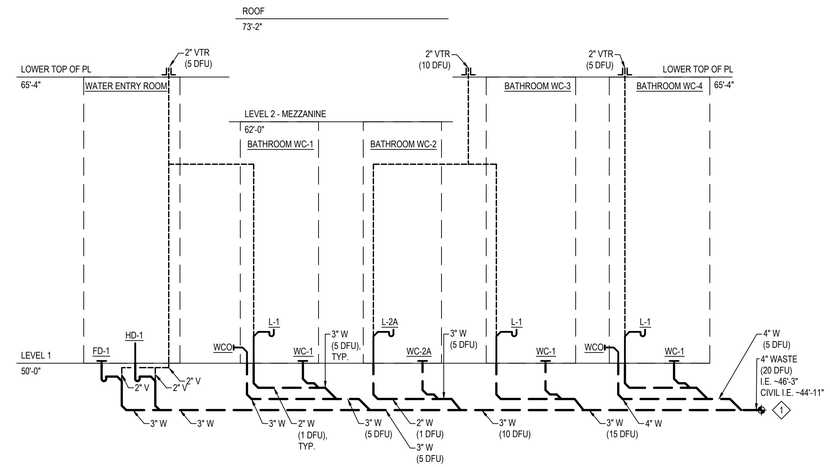

2 WASTE AND VENT RISER DIAGRAM
SCALE: NONE

GENERAL NOTES:

1. DOMESTIC WATER PIPE SIZED 2" AND SMALLER IS TO BE PEX UNLESS NOTED OTHERWISE.
2. DOMESTIC WATER PIPE SIZED PER SIZING TABLES SHOWN ON P0.02
3. AT TRANSITIONS FROM VERTICAL TO HORIZONTAL AT THE BASE OF A WASTE STACK PROVIDE 10 PIPE DIAMETERS OF LENGTH BETWEEN ELBOW AND NEXT FIXTURE CONNECTION TO ABATE HYDRAULIC JUMP.
4. PROVIDE CLEANOUTS PER SPC 7.7.0.
5. MAX 5 WATER CLOSETS ON VERTICAL OR HORIZONTAL 3" WASTE AND 3 WATER CLOSETS ON HORIZONTAL 3" W PER 2021 UPC 703.4 NOTE 4.
6. ALL SANITARY PIPING SLOPED AT 1/4" PER FOOT UNLESS NOTED OTHERWISE PER 2021 UPC 703.2.
7. ALL WASTE AND VENT SIZED PER 2021 SPC CH.7.

SHEET NOTES:

1. COORDINATE FINAL CONNECTIONS WITH CIVIL DRAWINGS FIVE FEET OUTSIDE THE BUILDING FOUNDATION. PIPE SIZE, INVERT DEPTH, FIXTURE UNITS, AND DRAINED AREA AS NOTED. IDENTIFY ANY DISCREPANCIES TO ENGINEER BEFORE COMMENCING WORK.

REUSE OF DOCUMENTS	VERIFY SCALE
THIS DOCUMENT, AND THE IDEAS AND DESIGNS INCORPORATED HERIN, AS AN INSTRUMENT OF PROFESSIONAL SERVICE, IS THE PROPERTY OF HV ENGINEERING, INC. AND IS NOT TO BE USED, IN WHOLE OR IN PART, FOR ANY OTHER PROJECT WITHOUT THE WRITTEN AUTHORIZATION OF HV ENGINEERING. COPYRIGHT, HV ENGINEERING, INC.	BAR MEASURES ONE INCH ON ORIGINAL DRAWING. 0" 1" IF NOT ONE INCH ON THIS DRAWING, ADJUST SCALES ACCORDINGLY.

PERMIT DOCUMENT

HV Engineering, Inc.
Consulting Engineers
Hall Creek Office Park
6912 220th St. SW, Suite 303
Mountlake Terrace, WA 98043
Phone: (206) 706-9669
www.hvengineering.biz

Project
PUYALLUP STORAGE

Location
111 5TH ST SE
PUYALLUP, WA 98372

Prepared For
SAMANTHA KEIMIG

1113 27th St Pl NW
Puyallup, WA 98371
(360) 631-6019
samantha.n.keimig@gmail.com

THESE DRAWINGS WERE DEVELOPED FOR EXCLUSIVE USE BY SAMANTHA KEIMIG ON A DESIGN BUILD CONCEPT. THEY ARE TO BE USED ONLY WITH WRITTEN PERMISSION OF SAMANTHA KEIMIG. FOR INFORMATION CONTACT: SAMANTHA KEIMIG.

NO.	DATE	REVISION
-	-	-
-	-	-
-	-	-
-	-	-
-	-	-
-	-	-

PARTNER IN CHARGE
DJ
PROJECT MANAGER
DJ
PROJECT ENGINEER
BWR
PROJECT TEAM MEMBERS
CEY, DJ
CHECK
BWR

ENGINEERS SEAL

2024-12-16

TITLE
PLUMBING RISER DIAGRAMS

PROJECT NO.
2024-126
DATE
DECEMBER 16, 2024
SHEET NUMBER
P4.01