# RIVER TRAIL APARTMENTS

# FACP REPLACEMENT & WIRELESS COMMUNICATOR INSTALLATION

City of Puyallup
Development & Permitting Services
ISSUED PERMIT

| | |
|---|---|
| Building | Planning |
| Engineering | Public Works |
| Fire | Traffic |

**City of Puyallup Fire REVIEWED FOR COMPLIANCE**
DDrake
03/05/2025
11:17:11 AM

Approval of submitted plans is not an approval of omissions or oversight by this office or noncompliance with any applicable regulations of local government. The contractor is responsible for making sure that the building complies with all applicable building codes and regulations of the local government.

THE APPROVED CONSTRUCTION PLANS AND ALL ENGINEERING MUST BE POSTED ON THE JOB AT ALL INSPECTIONS IN A VISIBLE AND READILY ACCESSIBLE LOCATION.

## OPERATIONAL MATRIX

SYSTEM OUTPUTS

| SYSTEM INPUTS | | A Supervising Station Notification | B Control Unit Annunciation | C Actuate Audible Alarm Signal For Building A | D Actuate Audible Alarm Signal For Building B | E Actuate Audible Alarm Signal For Building C | F Actuate Audible Alarm Signal For Building D | G Actuate Audible Alarm Signal For Building E | H Actuate Audible Alarm Signal For Building F | I Actuate Audible Alarm Signal For Building G | J Actuate Audible Alarm Signal For Building H | K Actuate Audible Alarm Signal For Building J | L Actuate Audible Alarm Signal For Building K | M Actuate Audible Alarm Signal For Building L | N Actuate Audible Alarm Signal For Building M | O Actuate Audible Sup Signal For Building N | P Transmit Fire Alarm Signal At Each Individual Bldg | Q Transmit Trbl Signal At Each Individual Bldg | R Transmit Supervisory Signal to Supervising Station | S Transmit Trouble Signal to Supervising Station | | Indicated Status on the FACP |
|---|---|---|---|---|---|---|---|---|---|---|---|---|---|---|---|---|---|---|---|---|---|---|
| FIRE ALARM | 1 Building A FACP Smoke Detector | X | | | | | | | | | | | | | | | | | | | X | 1 |
| | 2 Building A Residential | X | | | | | | | | | | | | | | | | | | | X | 2 |
| | 3 Building A Commercial | X | | | | | | | | | | | | | | | | | | | X | 3 |
| | 4 Building B | | X | | | | | | | | | | | | | | | | | | X | 4 |
| | 5 Building C | | | X | | | | | | | | | | | | | | | | | X | 5 |
| | 6 Building D | | | | X | | | | | | | | | | | | | | | | X | 6 |
| | 7 Building E | | | | | X | | | | | | | | | | | | | | | X | 7 |
| | 8 Building F | | | | | | X | | | | | | | | | | | | | | X | 8 |
| | 9 Building G | | | | | | | X | | | | | | | | | | | | | X | 9 |
| | 10 Building H | | | | | | | | X | | | | | | | | | | | | X | 10 |
| | 11 Building J | | | | | | | | | X | | | | | | | | | | | X | 11 |
| | 12 Building K | | | | | | | | | | X | | | | | | | | | | X | 12 |
| | 13 Building L | | | | | | | | | | | X | | | | | | | | | X | 13 |
| | 14 Building M | | | | | | | | | | | | X | | | | | | | | X | 14 |
| | 15 Building N | | | | | | | | | | | | | X | | | | | | | X | 15 |
| WATERFLOW | 16 Dry-Flow Switch – Building A | X | | | | | | | | | | | | | | | | | | | X | 16 |
| | 17 Wet-Flow Switch – Building B | | X | | | | | | | | | | | | | | | | | | X | 17 |
| | 18 Wet-Flow Switch – Building C | | | X | | | | | | | | | | | | | | | | | X | 18 |
| | 19 Wet-Flow Switch – Building D | | | | X | | | | | | | | | | | | | | | | X | 19 |
| | 20 Wet-Flow Switch – Building E | | | | | X | | | | | | | | | | | | | | | X | 20 |
| | 21 Wet-Flow Switch – Building F | | | | | | X | | | | | | | | | | | | | | X | 21 |
| | 22 Wet-Flow Switch – Building G | | | | | | | X | | | | | | | | | | | | | X | 22 |
| | 23 Wet-Flow Switch – Building H | | | | | | | | X | | | | | | | | | | | | X | 23 |
| | 24 Wet-Flow Switch – Building J | | | | | | | | | X | | | | | | | | | | | X | 24 |
| | 25 Wet-Flow Switch – Building K | | | | | | | | | | X | | | | | | | | | | X | 25 |
| | 26 Wet-Flow Switch – Building L | | | | | | | | | | | X | | | | | | | | | X | 26 |
| | 27 Wet-Flow Switch – Building M | | | | | | | | | | | | X | | | | | | | | X | 27 |
| | 28 Wet-Flow Switch – Building N | | | | | | | | | | | | | X | | | | | | | X | 28 |
| SUPERVISORY | 29 Hi/Low Air Switches – Building A | | | | | | | | | | | | | | X | | | X | | | X | 29 |
| | 30 Sprinkler Tamper Switches – Building A | | | | | | | | | | | | | | X | | | X | | | X | 30 |
| | 31 Sprinkler Tamper Switches – Building B | | | | | | | | | | | | | | X | | | X | | | X | 31 |
| | 32 Sprinkler Tamper Switches – Building C | | | | | | | | | | | | | | X | | | X | | | X | 32 |
| | 33 Sprinkler Tamper Switches – Building D | | | | | | | | | | | | | | X | | | X | | | X | 33 |
| | 34 Sprinkler Tamper Switches – Building E | | | | | | | | | | | | | | X | | | X | | | X | 34 |
| | 35 Sprinkler Tamper Switches – Building F | | | | | | | | | | | | | | X | | | X | | | X | 35 |
| | 36 Sprinkler Tamper Switches – Building G | | | | | | | | | | | | | | X | | | X | | | X | 36 |
| | 37 Sprinkler Tamper Switches – Building H | | | | | | | | | | | | | | X | | | X | | | X | 37 |
| | 38 Sprinkler Tamper Switches – Building J | | | | | | | | | | | | | | X | | | X | | | X | 38 |
| | 39 Sprinkler Tamper Switches – Building K | | | | | | | | | | | | | | X | | | X | | | X | 39 |
| | 40 Sprinkler Tamper Switches – Building L | | | | | | | | | | | | | | X | | | X | | | X | 40 |
| | 41 Sprinkler Tamper Switches – Building M | | | | | | | | | | | | | | X | | | X | | | X | 41 |
| | 42 Sprinkler Tamper Switches – Building N | | | | | | | | | | | | | | X | | | X | | | X | 42 |
| TROUBLE | 43 Fire Alarm AC Power Failure – Building A | | | | | | | | | | | | | | | X | | | X | X | X | 43 |
| | 44 Fire Alarm System Low Battery – Building A | | | | | | | | | | | | | | | X | | | X | X | X | 44 |
| | 45 Open Circuit – Building A | | | | | | | | | | | | | | | X | | | X | X | X | 45 |
| | 46 Ground Fault – Building A | | | | | | | | | | | | | | | X | | | X | X | X | 46 |
| | 47 Notification Appliance Circuit Short – Building A | | | | | | | | | | | | | | | X | | | X | X | X | 47 |
| | 48 System Trouble – Building B | | | | | | | | | | | | | | | X | | | X | X | X | 48 |
| | 49 System Trouble – Building C | | | | | | | | | | | | | | | X | | | X | X | X | 49 |
| | 50 System Trouble – Building D | | | | | | | | | | | | | | | X | | | X | X | X | 50 |
| | 51 System Trouble – Building E | | | | | | | | | | | | | | | X | | | X | X | X | 51 |
| | 52 System Trouble – Building F | | | | | | | | | | | | | | | X | | | X | X | X | 52 |
| | 53 System Trouble – Building G | | | | | | | | | | | | | | | X | | | X | X | X | 53 |
| | 54 System Trouble – Building H | | | | | | | | | | | | | | | X | | | X | X | X | 54 |
| | 55 System Trouble – Building J | | | | | | | | | | | | | | | X | | | X | X | X | 55 |
| | 56 System Trouble – Building K | | | | | | | | | | | | | | | X | | | X | X | X | 56 |
| | 57 System Trouble – Building L | | | | | | | | | | | | | | | X | | | X | X | X | 57 |
| | 58 System Trouble – Building M | | | | | | | | | | | | | | | X | | | X | X | X | 58 |
| | 59 System Trouble – Building N | | | | | | | | | | | | | | | X | | | X | X | X | 59 |
| | 60 Full System Open Circuit | | | | | | | | | | | | | | | X | | | X | X | X | 60 |
| | 61 Full System Ground Fault | | | | | | | | | | | | | | | X | | | X | X | X | 61 |
| | | A | B | C | D | E | F | G | H | I | J | K | L | M | N | O | P | Q | R | S | | |

## EQUIPMENT LEGEND

| SYMBOL | MANUFACTURER | PART NO | DESCRIPTION |
|---|---|---|---|
| NEW DEVICES | | | |
| FACP | SILENT KNIGHT | SK-6700 | FIRE ALARM CONTROL PANEL, ADDRESSABLE, SD PROTOCOL |
| AES | AES CORP | 7707P-88-M | INTELLINET 2.0 FIRE SUBSCRIBER, 8 ZONE WITH MULTIPLE COMMUNICATION TECHNOLOGIES (MCT), RED ENCLOSURE |
| EXISTING DEVICES | | | |
| S | SILENT KNIGHT | SD505-APS | ADDRESSABLE PHOTOELECTRIC SMOKE DETECTOR |
| H | SILENT KNIGHT | SD505-AHS | ADDRESSABLE HEAT DETECTOR |
| F | SILENT KNIGHT | SD500-PS | ADDRESSABLE MANUAL PULL STATION |
| AIM | SILENT KNIGHT | SD500-MIM | ADDRESSABLE MINIATURE INPUT MODULE |
| | SYSTEM SENSOR | HR/SR/P2R | OCCUPANT NOTIFICATION DEVICES |

## SITE PLAN

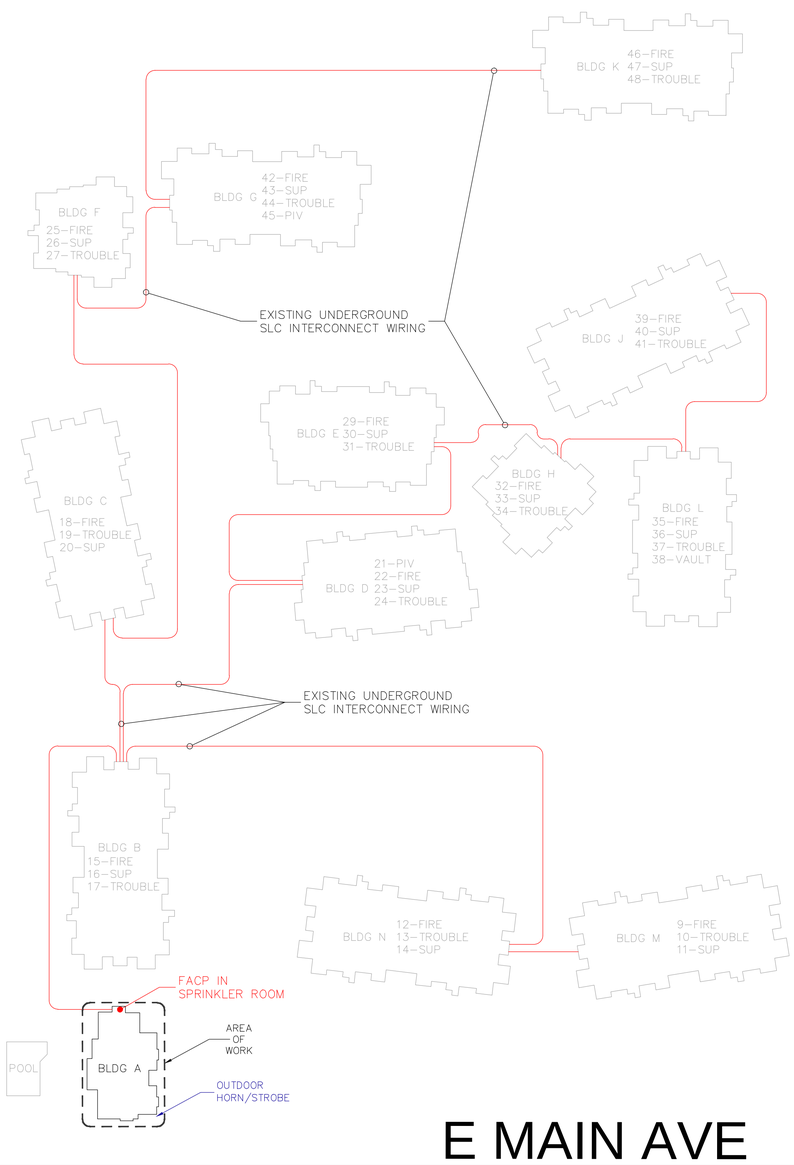


## SHEET INDEX


| SHEET # | SHEET DESCRIPTION |
|---|---|
| FA 0 | PROJECT DETAILS & SITE INFORMATION |
| FA 1 | FIRE ALARM BUILDING A, BATTERY CALCULATIONS, POINT TO POINT VOLTAGE DROP, MONITORING ZONES & SINGLE LINE RISER DIAGRAM |


## PROJECT DETAILS

SCOPE OF WORK : THE EXISTING ADDRESSABLE FACP (FAREHYT IFP-100) IN BUILDING A WAS FOUND TO HAVE A FAULTY CHARGING CIRCUIT. THIS PANEL PROVIDES MONITORING TO ALL OTHER 12 BUILDINGS ONSITE VIA MINI MODULES MONITORING THE FACP AT EACH INDIVIDUAL BUILDING (FIRE, SUPERVISORY, AND TROUBLE). THE EXISTING FAULTY FACP WILL BE REPLACED WITH AN ADDRESSABLE FACP (SILENT KNIGHT SK-6808). AN AES RADIO WILL ALSO BE INSTALLED TO REPLACE THE POTS LINES FOR COMMUNICATION. FIRE PANEL BEING REPLACED IS LOCATED IN THE FIRE SPRINKLER ROOM OF BUILDING A.

ALL EXISTING DEVICES / CIRCUITS WILL BE REMAIN AND BE TIED IN AS-IS, NO CHANGES WILL BE MADE TO THE EXISTING SYSTEM. THE EXISTING BUILDING IS FULLY-SPRINKLED.

EXISTING FIRE ALARM DEVICE COUNTS : (1) ADDRESSABLE FACP, (1) AES 2.0 RADIO, (5) PULL-STATIONS, (12) SMOKE DETECTORS, (8) HEAT DETECTORS, (16) OCCUPANT NOTIFICATION DEVICES, AND (39) MODULES MONITORING THE OTHER BUILDINGS FACPs.

EXISTING FIRE SPRINKLER EQUIPMENT : (1) DRY WATERFLOW, AND (4) TAMPER SWITCHES.

## PROJECT CONTACT INFO


OWNER / TENANT
C/O AMERICAN PROPERTY MANAGEMENT
1617 E MAIN
PUYALLUP, WA 98372
CONTACT : PAUL GRESHAM
PHONE : 253.449.7682
EMAIL : 061RIV1@ACG.COM

FIRE ALARM CONTRACTOR
FIRE PROTECTION, INC.
17410 ASH WAY, Ste 8
LYNNWOOD, WA 98037
CONTACT : NICK CHANDLER
PHONE : 425.290.9600
EMAIL : NICK@FPISEATTLE.COM


## CODE INFO

AUTHORITY HAVING JURISDICTION : CITY OF PUYALLUP

BUILDING CODE : 2021 IBC & CITY OF PUYALLUP

FIRE CODE : 2021 IFC & CITY OF PUYALLUP

ELECTRICAL CODE : 2017 NEC & CITY OF PUYALLUP

STANDARDS : 2016 NFPA 72, CITY OF PUYALLUP

BUILDING USE AND OCCUPANCY : R-2 (FULLY SPRINKLED)

CLASSIFICATION OF SUPERVISING STATION : REMOTE SUPERVISING STATION

REMOTE SUPERVISING STATION : SECURITAS

PARCEL NUMBER : 0420262055

## INSTALLATION NOTES

1. ALL WORK SHALL BE IN ACCORDANCE WITH NFPA STANDARDS AND ALL LOCAL ADOPTED CODES.
2. ALL CIRCUITS MUST BE TESTED FOR OPENS, CONTINUITY, SHORTS, AND GROUNDS.
3. INSTRUCTIONS FOR THE OPERATING, TESTING AND MAINTENANCE OF THE SYSTEM, ALONG WITH RECORD DRAWINGS OTHERWISE REFERRED TO AS ("AS-BUILT") AND EQUIPMENT SPECIFICATIONS SHALL BE PROVIDED TO THE OWNER ONCE THE FIRE ALARM SYSTEM HAS BEEN ACCEPTED BY THE AHJ. .
4. ALL SYSTEMS AND DEVICES SHALL BE INSTALLED AND TESTED PER THE MANUFACTURES LISTING AND THE AUTHORITY HAVING JURISDICTION (NFPA72 10.14.2.1).
5. THE SYSTEM WILL BE 100% PRE-TESTED, AN NFPA 72 COMPLETION FORM WILL BE FILLED OUT AND PROVIDED TO THE AHJ AND THE ELECTRICAL PERMITS MUST BE SIGNED OFF PRIOR TO THE FIRE FINAL INSPECTION.

## VICINITY MAP

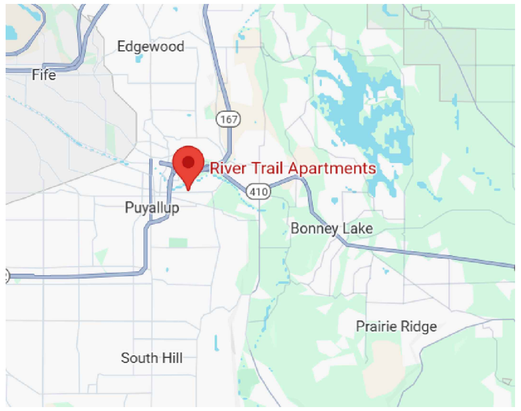



FIRE PROTECTION INC.
17410 Ash Way, Ste 8
Lynnwood, WA 98037
425-290-9600
FPISEATTLE.COM


NFPA 000805173

ROY L CATS
CERTIFIED FIRE PROTECTION SPECIALIST
NFPA CFPS
#1473

DRAWN BY: NICK CHANDLER, AET NICET III - #148121
REVIEWED BY: DAVID MOW, SET NICET IV - #120904
SEATTLE FIRE DEPT. #SCP-C 9955
L & I #CATS*FIR022CG
PROPERTY OF / ALL RIGHTS RESERVED F.P.I.

DAVID MOW:

REVISION RECORD

| DATE | DESCRIPTION |
|---|---|

DATE: 01.18.25

PROJECT NAME

RIVER TRAIL APARTMENTS
1617 EAST MAIN AVE
PUYALLUP, WA 98372

SHEET TITLE

FIRE ALARM
FACP REPLACEMENT

SHEET NUMBER

FA 0

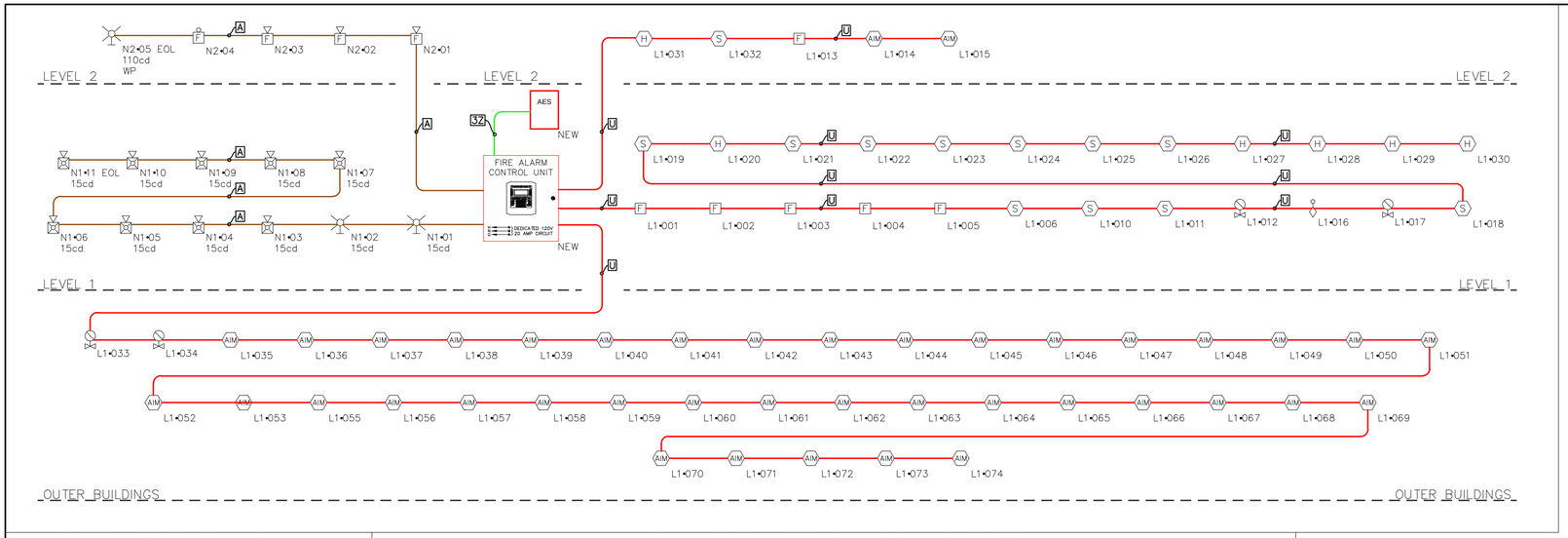


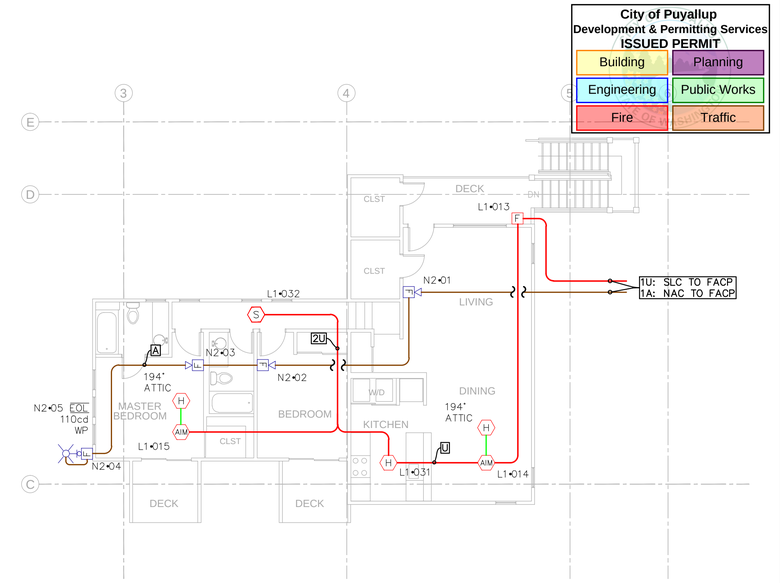


## 2ND FLOOR APT PLAN

SCALE : 1/8" = 1'

0'1' 5' 10' 20'

N

### ZONES SENT TO MONITORING FROM FACP

| # | MONITORING ZONES FOR NEW FACP |
|---|---|
| 1 | BUILDING A FACP SMOKE |
| 2 | BUILDING A DRY FLOW |
| 3 | BUILDING A LOW AIR |
| 4 | BUILDING A DRY TAMPER |
| 5 | BUILDING A PIV TAMPER |
| 6 | BUILDING A VAULT TAMPER |
| 7 | BUILDING A RESIDENTIAL SPACE FIRE ALARM |
| 8 | BUILDING A COMMERCIAL SPACE FIRE ALARM |
| 9 | BUILDING M FIRE ALARM |
| 10 | BUILDING M TROUBLE |
| 11 | BUILDING M SUPERVISORY |
| 12 | BUILDING N FIRE ALARM |
| 13 | BUILDING N TROUBLE |
| 14 | BUILDING N SUPERVISORY |
| 15 | BUILDING B FIRE ALARM |
| 16 | BUILDING B SUPERVISORY |
| 17 | BUILDING B TROUBLE |
| 18 | BUILDING C FIRE ALARM |
| 19 | BUILDING C TROUBLE |
| 20 | BUILDING C SUPERVISORY |
| 21 | BUILDING D PIV |
| 22 | BUILDING D FIRE ALARM |
| 23 | BUILDING D SUPERVISORY |
| 24 | BUILDING D TROUBLE |
| 25 | BUILDING F FIRE ALARM |
| 26 | BUILDING F SUPERISORY |
| 27 | BUILDING F TROUBLE |
| 28 | UNUSED |
| 29 | BUILDING E FIRE ALARM |
| 30 | BUILDING E SUPERVISORY |
| 31 | BUILDING E TROUBLE |
| 32 | BUILDING H FIRE ALARM |
| 33 | BUILDING H SUPERVISORY |
| 34 | BUILDING H TROUBLE |
| 35 | BUILDING L FIRE ALARM |
| 36 | BUILDING L SUPERVISORY |
| 37 | BUILDING L TROUBLE |
| 38 | BUILDING L VAULT TAMPER |
| 39 | BUILDING J FIRE ALARM |
| 40 | BUILDING J SUPERVISORY |
| 41 | BUILDING J TROUBLE |
| 42 | BUILDING G FIRE ALARM |
| 43 | BUILDING G SUPERVISORY |
| 44 | BUILDING G TROUBLE |
| 45 | BUILDING G PIV TAMPER |
| 46 | BUILDING K FIRE ALARM |
| 47 | BUILDING K SUPERVISORY |
| 48 | BUILDING K TROUBLE |

### BATTERY CALCULATIONS & POINT TO POINT VOLTAGE DROP

PANEL (6808 (SD)) BATTERY CALCULATION (SECONDARY POWER SOURCE REQUIREMENTS)

| | | QTY | PART NO. | DESCRIPTION | STANDBY CURRENT: CURRENT DRAW (A) | STANDBY CURRENT: TOTAL (A) | SECONDARY ALARM CURRENT: CURRENT DRAW (A) | SECONDARY ALARM CURRENT: TOTAL (A) |
|---|---|---|---|---|---|---|---|---|
| PANEL COMPONENTS | | 1 | 6808 (SD) | FIRE ALARM CONTROL PANEL, ADDRESSABLE, SD PROTOCOL | 0 | 0 | 0 | 0 |
| | | 1 | 6808 MAIN BOARD | FIRE ALARM CONTROL PANEL MAIN BOARD SD PROTOCOL | 0.17 | 0.17 | 0.365 | 0.365 |
| CIRCUIT | SYMBOL | QTY | PART NO | DESCRIPTION | CURRENT DRAW (A) | TOTAL (A) | CURRENT DRAW (A) | TOTAL (A) |
| L1 | F | 1 | PS-SA | CONVENTIONAL SA MANUAL PS W/SD500-MIM | 0.00055 | 0.00055 | 0.00055 | 0.00055 |
| | AIM | 45 | SD500-MIM | ADDRESSABLE MINIATURE INPUT MODULE | 0.00055 | 0.02475 | 0.00055 | 0.02475 |
| | F | 5 | SD500-PS | ADDRESSABLE MANUAL PULL STATION | 0.00055 | 0.00275 | 0.00055 | 0.00275 |
| | H | 6 | SD505-AHS | ADDRESSABLE HEAT DETECTOR | 0.00055 | 0.0033 | 0.00055 | 0.0033 |
| | S | 12 | SD505-APS | ADDRESSABLE PHOTOELECTRIC SMOKE DETECTOR | 0.00055 | 0.0066 | 0.00055 | 0.0066 |
| | | 4 | TAMPER SWITCH | TAMPER SWITCH W/SD500-MIM | 0.00055 | 0.0022 | 0.00055 | 0.0022 |
| | | 1 | WATERFLOW SWITCH | WATERFLOW W/SD500-MIM | 0.00055 | 0.00055 | 0.00055 | 0.00055 |
| N1 | | 9 | P2R | 2-WIRE, HORN STROBE, RED 15CD | 0 | 0 | 0.079 | 0.7110 |
| | | 2 | SR | STROBE, RED 15CD | 0 | 0 | 0.066 | 0.132 |
| N2 | | 3 | MHR | MINI-HORN, RED | 0 | 0 | 0.017 | 0.051 |
| | WP | 1 | SRK | STROBE, STANDARD CD, OUTDOOR 110CD | 0 | 0 | 0.202 | 0.202 |
| | | 1 | SSV120-6 | ALARM BELL 6" 24VDC, RED | 0 | 0 | 0.053 | 0.053 |
| | | | | | TOTAL STANDBY (A) | 0.2107 | TOTAL ALARM (A) | 1.55 |
| | | | | | REQUIRED STANDBY TIME (HOURS) | | 24 | |
| | | | | | REQUIRED ALARM TIME (MINUTES) | | 5 | |
| SECONDARY STANDBY LOAD (A) | | | | 0.2107 | 24 | | 5.06 | |
| SECONDARY ALARM LOAD (A) | | | | 1.55 | 0.083 | | 0.130 | |
| STANDBY AND ALARM SUBTOTAL (AMP HOURS) | | | | | 5.19 | | | |
| DERATING FACTOR | | | | | 1.25 | | | |
| SECONDARY LOAD REQUIREMENTS (AMP HOURS) | | | | | 6.48 | | | |

PROVIDE (2) 12V 7AH BATTERIES

*BATTERY BOX SIZE CAPACITY NOT SPECIFIED. REFER TO MANUFACTURER DOCUMENTATION.

N1 POINT-TO-POINT REPORT

| CURRENT SUMMARY | | | | POWER SUMMARY | | | |
|---|---|---|---|---|---|---|---|
| MAX. CIRCUIT CURRENT (A): | 3 | TOTAL CIRCUIT CURRENT (A): | 0.8430 | STARTING CALC. VOLTAGE: | 20.40 | MAX. VOLTAGE DROP: | 0.690 |
| | | SPARE CIRCUIT CURRENT (A): | 2.16 | | | VOLTAGE DROP % | 3.38 % |
| | | SPARE CIRCUIT CURRENT % | 71.90 % | MIN. OPERATIONAL VOLTAGE: | 16 | END OF LINE VOLTAGE: | 19.71 |
| MAX. CARD CURRENT (A): | n/a | TOTAL CARD CURRENT (A): | 1.19 | WIRE RESISTANCE (Ω/KFT): | 3.07 | TOTAL CIRCUIT LENGTH (FT): | 247 |
| | | SPARE CARD CURRENT (A): | | | | TOTAL CIRCUIT RESISTANCE (Ω): | 1.52 |
| | | SPARE CARD CURRENT % | | | | | |

CIRCUIT WIRING PROPERTIES: 'V' 14/2 FPLP/R (NAC) 60993B 14 AWG, 2 COND. SOLID COPPER FPLP/R ANALOG UNSHIELDED

DISTANCE MEASURED USING DRAWN SEGMENT LENGTHS WITH 10.00 % ADDITIONAL LENGTH CALCULATED

| DEVICE LABEL | PART NO | DESCRIPTION | CANDELAS | ALARM CURRENT (A) | REMAINING ALARM CURRENT (A) | DISTANCE FROM PREVIOUS | RESISTANCE FROM PREVIOUS (Ω) | VOLTAGE DROP FROM PREVIOUS | VOLTAGE AT DEVICE | TOTAL VOLTAGE DROP | VOLTAGE DROP PERCENT |
|---|---|---|---|---|---|---|---|---|---|---|---|
| N1•01 | SR | STROBE, RED | 15CD | 0.066 | 0.8430 | 27 | 0.163781 | 0.14 | 20.26 | 0.68 | % |
| N1•02 | SR | STROBE, RED | 15CD | 0.066 | 0.7770 | 20 | 0.123421 | 0.1 | 20.17 | 0.23 | 1.15 % |
| N1•03 | P2R | 2-WIRE, HORN STROBE, RED | 15CD | 0.079 | 0.7110 | 12 | 0.075503 | 0.05 | 20.11 | 0.29 | 1.41 % |
| N1•04 | P2R | 2-WIRE, HORN STROBE, RED | 15CD | 0.079 | 0.6320 | 20 | 0.121471 | 0.08 | 20.04 | 0.36 | 1.79 % |
| N1•05 | P2R | 2-WIRE, HORN STROBE, RED | 15CD | 0.079 | 0.5530 | 42 | 0.25862 | 0.14 | 19.89 | 0.510 | 2.49 % |
| N1•06 | P2R | 2-WIRE, HORN STROBE, RED | 15CD | 0.079 | 0.474 | 17 | 0.103998 | 0.05 | 19.84 | 0.560 | 2.73 % |
| N1•07 | P2R | 2-WIRE, HORN STROBE, RED | 15CD | 0.079 | 0.395 | 11 | 0.065914 | 0.03 | 19.82 | 0.580 | 2.86 % |
| N1•08 | P2R | 2-WIRE, HORN STROBE, RED | 15CD | 0.079 | 0.316 | 19 | 0.119258 | 0.04 | 19.78 | 0.620 | 3.04 % |
| N1•09 | P2R | 2-WIRE, HORN STROBE, RED | 15CD | 0.079 | 0.237 | 9 | 0.054354 | 0.01 | 19.77 | 0.630 | 3.10 % |
| N1•10 | P2R | 2-WIRE, HORN STROBE, RED | 15CD | 0.079 | 0.158 | 45 | 0.27791 | 0.04 | 19.72 | 0.680 | 3.32 % |
| N1•11 EOL | P2R | 2-WIRE, HORN STROBE, RED | 15CD | 0.079 | 0.079 | 25 | 0.154605 | 0.01 | 19.71 | 0.690 | 3.38 % |

CALCULATION METHODS:
RESISTANCE FROM PREVIOUS (Ω) = WIRE RESISTANCE (Ω/FT) X 2 X DIST. FROM PREVIOUS (FT)
VOLTAGE DROP FROM PREVIOUS = RESISTANCE FROM PREVIOUS (Ω) X REMAINING CURRENT (A)

N2 POINT-TO-POINT REPORT

| CURRENT SUMMARY | | | | POWER SUMMARY | | | |
|---|---|---|---|---|---|---|---|
| MAX. CIRCUIT CURRENT (A): | 3 | TOTAL CIRCUIT CURRENT (A): | 0.306 | STARTING CALC. VOLTAGE: | 20.40 | MAX. VOLTAGE DROP: | 0.29 |
| | | SPARE CIRCUIT CURRENT (A): | 2.69 | | | VOLTAGE DROP % | 1.41 % |
| | | SPARE CIRCUIT CURRENT % | 89.80 % | MIN. OPERATIONAL VOLTAGE: | 16 | END OF LINE VOLTAGE: | 20.11 |
| MAX. CARD CURRENT (A): | n/a | TOTAL CARD CURRENT (A): | 1.19 | WIRE RESISTANCE (Ω/KFT): | 3.07 | TOTAL CIRCUIT LENGTH (FT): | 160 |
| | | SPARE CARD CURRENT (A): | | | | TOTAL CIRCUIT RESISTANCE (Ω): | 0.982 |
| | | SPARE CARD CURRENT % | | | | | |

CIRCUIT WIRING PROPERTIES: 'V' 14/2 FPLP/R (NAC) 60993B 14 AWG, 2 COND. SOLID COPPER FPLP/R ANALOG UNSHIELDED

DISTANCE MEASURED USING DRAWN SEGMENT LENGTHS WITH 10.00 % ADDITIONAL LENGTH CALCULATED

| DEVICE LABEL | PART NO | DESCRIPTION | CANDELAS | ALARM CURRENT (A) | REMAINING ALARM CURRENT (A) | DISTANCE FROM PREVIOUS | RESISTANCE FROM PREVIOUS (Ω) | VOLTAGE DROP FROM PREVIOUS | VOLTAGE AT DEVICE | TOTAL VOLTAGE DROP | VOLTAGE DROP PERCENT |
|---|---|---|---|---|---|---|---|---|---|---|---|
| N2•01 | MHR | MINI-HORN, RED | | 0.017 | 0.306 | 100 | 0.6140 | 0.19 | 20.21 | 0.19 | 0.92 % |
| N2•02 | MHR | MINI-HORN, RED | | 0.017 | 0.289 | 27 | 0.165317 | 0.05 | 20.16 | 0.24 | 1.16 % |
| N2•03 | MHR | MINI-HORN, RED | | 0.017 | 0.272 | 7 | 0.04066 | 0.01 | 20.15 | 0.25 | 1.21 % |
| N2•04 | SSV120-6 | ALARM BELL 6" 24VDC, RED | | 0.053 | 0.255 | 25 | 0.150649 | 0.04 | 20.11 | 0.29 | 1.40 % |
| N2•05 EOL | SRK | STROBE, STANDARD CD, OUTDOOR | 110CD | 0.202 | 0.202 | 2 | 0.01175 | 0 | 20.11 | 0.29 | 1.41 % |

CALCULATION METHODS:
RESISTANCE FROM PREVIOUS (Ω) = WIRE RESISTANCE (Ω/FT) X 2 X DIST. FROM PREVIOUS (FT)
VOLTAGE DROP FROM PREVIOUS = RESISTANCE FROM PREVIOUS (Ω) X REMAINING CURRENT (A)

CABLE AND WIRE LEGEND – *ALL WIRING IS EXISTING*

| LINE TYPE | LABEL | CABLE TYPE | AWG | RESIST. (Ω/Kft) | DESCRIPTION |
|---|---|---|---|---|---|
| | A | 14/2 FPLR | 14 | 3.07 | NOTIFICATION APPLIANCE CIRCUIT |
| | U | 18/4 FPLR | 18 | 7.77 | SIGNALING LINE CIRCUIT |
| | Z | 18/2 FPLR | 18 | 7.77 | IDC / ZONE CIRCUIT (IN RACEWAY) |

All CONDUCTORS SHALL BE INSTALLED IN RACEWAYS SUITABLE FOR THE INSTALLATION CONDITIONS WHEN REQUIRED BY SBC, SFC, NPFA-72, NFPA-70 (NEC), AND CITY OF SEATTLE'S ELECTRICAL CODE.

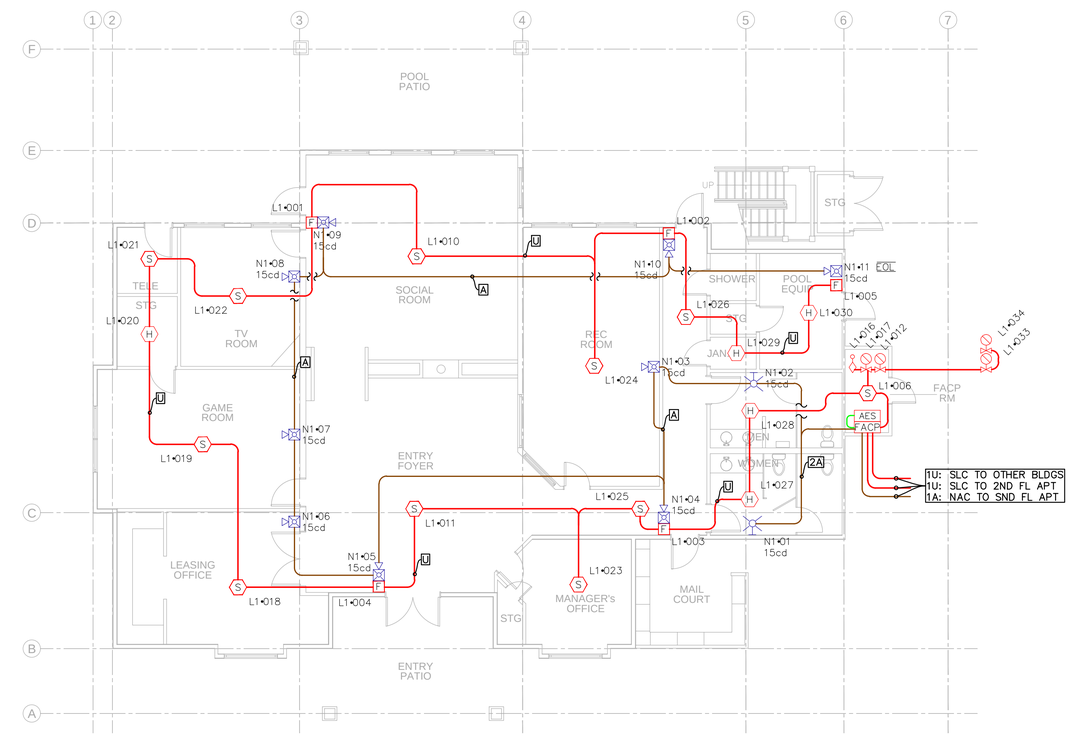


## 1ST FLOOR PLAN

SCALE : 1/8" = 1'

0'1' 5' 10' 20'

N


FPI
FIRE PROTECTION INC.
17410 Ash Way, Ste 8
Lynnwood, WA 98037
425-290-9600
FPISEATTLE.COM


NFPA 000805173

ROY L CATS
CERTIFIED FIRE PROTECTION SPECIALIST
NFPA CFPS
#1473

DRAWN BY: NICK CHANDLER, AET NICET III - #148121
REVIEWED BY: DAVID MOW, SET NICET IV - #120904
SEATTLE FIRE DEPT. #SCP-C 9955
L & I #CATS*RL022CG
PROPERTY OF / ALL RIGHTS RESERVED F.P.I.

DAVID MOW:

REVISION RECORD

| DATE / DESCRIPTION |
|---|

DATE: 01.18.25

PROJECT NAME

RIVER TRAIL APARTMENTS
1617 EAST MAIN AVE
PUYALLUP, WA 98372

SHEET TITLE

FIRE ALARM BUILDING A FLOOR PLAN, BATTERY CALCS, POINT TO POINT VOLT DROP, MONITORING ZONES & SINGLE LINE RISER DIAGRAM

SHEET NUMBER

FA 1