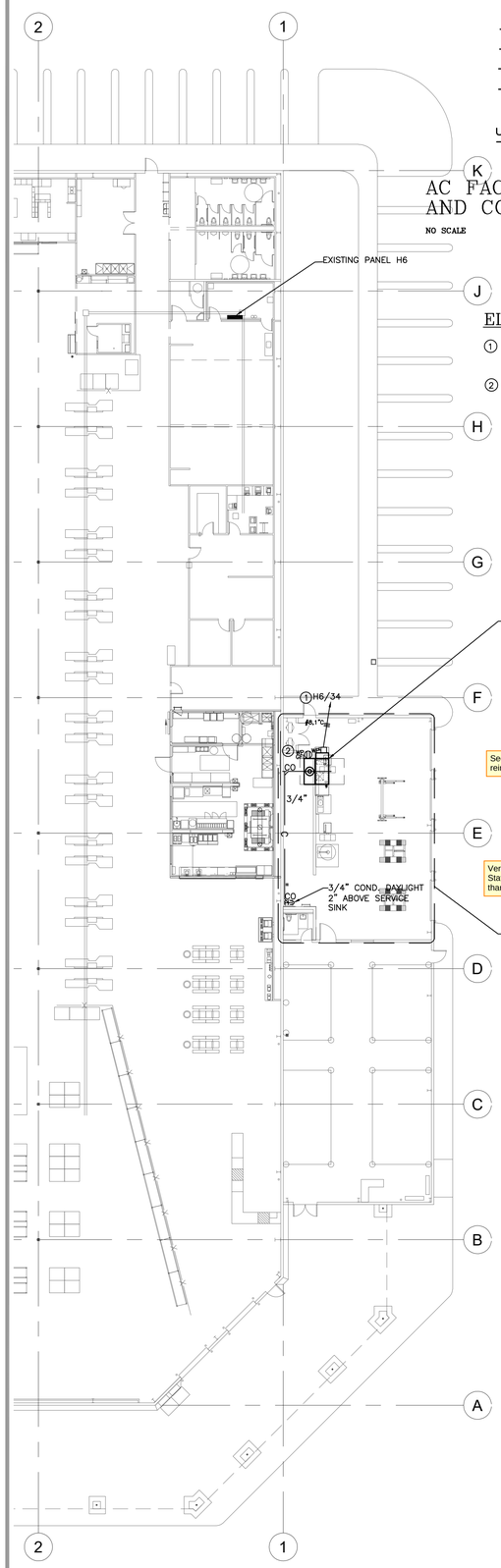

PARTIAL FLOOR PLAN
SCALE: 1/16" = 1'-0"

OPTIONAL POWERED GFCI

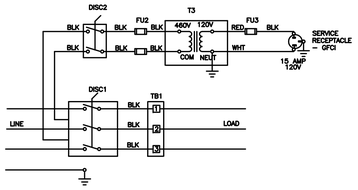

UNIT DISCONNECT SWITCH AND CONVENIENCE OUTLET – UL – AAON ROOFTOP A/C UNITS

AC FACTORY INSTALLED DISCONNECT AND CONVENIENCE OUTLET WIRING DIAGRAM

NO SCALE

ELECTRICAL PLAN NOTES:

1. E.C. TO PROVIDE A 40A/3P BREAKER IN EXISTING PANEL H6 FOR NEW AC. FIELD VERIFY CONDITION OF EXISTING PANEL PRIOR TO BID. IF EXISTING LOADS ARE MORE THAN SHOWN, NOTIFY ENGINEER IMMEDIATELY.
2. AC UNITS ARE LOCATED ON ROOF. VERIFY EXACT LOCATION WITH M.C. BEFORE ROUGH-IN INSTALLATION. HVAC POWER SHALL BE OVERHEAD. DO NOT RUN CONDUIT UNDERGROUND OR ON ROOF. DISCONNECT AND RECEPTACLE ARE PART OF UNIT.

ELECTRICAL LEGEND

$	SINGLE POLE SWITCH, +42"
$a	SUB-LETTER INDICATES FIXTURE CONTROLLED, +42"
$3	THREE POLE SWITCH, +42"
	JUNCTION BOX, SIZE AND TYPE PER CODE
	MOTOR CONNECTION AS REQUIRED
	DUPLEX RECEPTACLE, +18" OR AS NOTED
	FUSED DISCONNECT, COORDINATE W/EQUIPMENT SUPPLIER
	NON-FUSED DISCONNECT, COORDINATE W/EQUIPMENT SUPPLIER
	CONDUIT IN CEILING OR WALL, 1/2" MIN.
	CONDUIT UNDERGROUND OR FLOOR, 3/4" MIN.
5/4	HOME RUN TO PANEL WITH CIRCUIT NUMBER, SLASHES INDICATE NUMBER OF CONDUCTORS
#8,1"C	INDICATES WIRES AND CONDUIT OTHER THAN #12,1/2"C C – METALLIC CONDUIT, PVC – PLASTIC CONDUIT
	ISOLATED GROUND OR GROUND CONDUCTOR
	FLEXIBLE CONDUIT CONNECTION AS REQUIRED
	EXISTING PANEL
E.C.	ELECTRICAL CONTRACTOR
WP	WEATHERPROOF
	HACR BREAKER IN NEMA ENCLOSURE. COORDINATE WITH EQUIPMENT SUPPLIER.

ELECTRICAL GENERAL NOTES:

(1) INFORMATION ON THE EXISTING INSTALLATION HAS BEEN OBTAINED FROM THE BEST SOURCES AVAILABLE BUT CAN NOT BE GUARANTEED ACCURATE IN ALL RESPECT. PRIOR TO BID, IT IS THE CONTRACTOR'S RESPONSIBILITY TO VISIT THE SITE, THOROUGHLY FAMILIARIZE HIMSELF.

(2) ALL WORK SHALL BE PERFORMED TO CHANGE THE EXISTING ELECTRICAL INSTALLATION AS SHOWN. INCLUDE AS PART OF THE CONTRACT ALL RELATED WORK REQUIRED TO OBTAIN THE INDICATED RESULTS. ALL EXISTING WIRING, CONDUITS, JUNCTION BOXES AND ALL OTHER ELECTRICAL EQUIPMENT AND DEVICES IN THE AREAS AFFECTED BY THE DEMOLITION AND THE NEW WORK SHALL BE REMOVED AND RELOCATED AS REQUIRED. EXTEND ALL CONDUITS AND WIRING. REPULL NEW WIRES AS REQUIRED.

(3) ALL WORK IS TO BE DONE SO AS NOT TO INTERFERE WITH THE WAREHOUSE'S NORMAL OPERATION. ANY ELECTRICAL SHUTDOWN SHALL BE COORDINATED AND SCHEDULED AS APPROVED BY THE STORE MANAGER OR COSTCO'S DESIGNATED REPRESENTATIVE.

(4) DO NOT RUN CONDUITS AND WIRES ON ROOF.

PANEL: H6 — 480 / 277 VOLTS, 600 A CU BUS M.L.O., TOP FEED — 3 PHASE, 4 WIRE, 22000 A.I.C. MIN. — EXISTING, SURFACE MOUNT, SQ-D I-LINE

CIRCUIT USE	PHASE (KVA) A	PHASE (KVA) B	PHASE (KVA) C	BKR.	CKT. NO.	CKT. NO.	BKR.	PHASE (KVA) A	PHASE (KVA) B	PHASE (KVA) C	CIRCUIT USE
	10.00				1	2		15.00			
SUBFEED T3 30KVA		10.00		45/3	3	4	70/3		15.00		SUBFEED T4 45KVA
			10.00		5	6				15.00	
	2.22				7	8		4.24			
AC-2		2.22		15/3	9	10	25/3		4.24		AC-4
			2.22		11	12				4.24	
SPACE					13	14					SPACE
SPACE					15	16					SPACE
SPACE					17	18					SPACE
	7.68				19	20					SPACE
AC-3		7.68		40/3	21	22					SPACE
			7.68		23	24					SPACE
SPACE					25	26					SPACE
SPACE					27	28					SPACE
SPACE					29	30					SPACE
	9.30				31	32		6.10			
AD-1		9.30		50/3	33	34	40/3		6.10		AC-36*
			9.30		35	36				6.10	
	9.30				37	38					
AD-2		9.30		50/3	39	40	20/3				SPARE
			9.30		41	42					
TOTAL PHASE A (KVA)	38.50				63.84 KVA			25.34			
TOTAL PHASE B (KVA)		38.50			63.84 KVA				25.34		
TOTAL PHASE C (KVA)			38.50		63.84 KVA					25.34	
TOTAL CONNECTED LOAD					191.52 KVA					230 A	

*NEW/REVISE PANEL. PROVIDE BREKAER AS SHOWN.

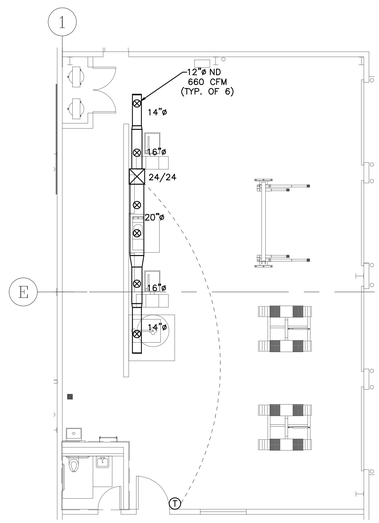

TIRE INSTALL HVAC PLAN
SCALE: 1/8" = 1'-0"

GENERAL MECHANICAL NOTES

THE FOLLOWING NOTES APPLY TO ENTIRE PLAN AS APPLICABLE.

1. M.C. SHALL ENSURE ALL ROOF TOP EQUIPMENT IS LABELED CORRECTLY AND MATCH CALLOUTS ON PLAN ON THE INSIDE & OUT OF THE BUILDING. THIS INCLUDES HVAC UNITS & EXHAUST FANS. LABELS SHOULD BE IN 6" BLOCK LETTERING IN BLACK COLOR AND LOCATED WHERE EASILY VISIBLE FROM THE ROOF HATCH.
2. MAINTAIN A MINIMUM OF 10'-0" BETWEEN EXHAUST OUTLET AND UNIT FRESH AIR INTAKE.
3. COORDINATE ALL MECHANICAL DUCTWORK LOCATIONS WITH ELECTRICAL EQUIPMENT. NO DUCTWORK WILL BE ALLOWED TO RUN OVER THE TOP OF ELECTRICAL DISTRIBUTION EQUIPMENT OR PANELS.
4. DIMENSIONS ARE TO COLUMN LINES.
5. APPLICABLE BUILDING CODE **2021 Washington State Building Code (IBC 2021)** APPLICABLE MECHANICAL CODE: **2021 Washington State Mechanical Code (IMC 2021)** APPLICABLE ENERGY CODE: **2021 Washington State Energy Code (ECC 2021)**
7. PROVIDE TIE DOWN FOR ALL NEW FLUES & VENTS OF 3' OR TALLER.
8. RUN ALL SUPPLY, RETURN AND EXHAUST DUCTS AND FLUES BETWEEN THE ROOF AND CEILING SPACE STRAIGHT WITH INTERNAL INSULATION. NO ANGLES OR OFFSETS. CONTACT ARCHITECT TO RESOLVE ANY CONFLICTS WITH STRUCTURE.
9. ALL CONDENSATE PIPING TO BE SLOPED AT 2% MINIMUM UNLESS OTHERWISE NOTED.
10. **RUN PIPING IN ROOF TRUSS SPACE PERPENDICULAR OR PARALLEL TO BUILDING JOIST OR GIRDERS, FOR PASSING BELOW SOLID GIRDERS MOUNT PIPING 6" MAXIMUM FROM BOTTOM OF GIRDER. DO NOT BLOCK LIGHTING & SKYLIGHTS.**

MECHANICAL PLAN NOTES

SEE BUBBLE ON PLAN FOR SPECIFIC REFERENCE.

(6) **INSTALL NEW AC UNIT.** MC TO LOCATE ROOF PENETRATIONS AND ROOF CURB FOR M.B.S. AND/OR G.C. PENETRATIONS SHALL BE SUCH THAT SUPPLY, RETURN AND/OR EXHAUST DUCT DROPS CAN EXTEND STRAIGHT DOWN TO CEILING SPACE OR DIFFUSER PACKAGE.

RELOCATION OF ANY UNIT FROM WHERE SHOWN ON PLAN SHALL BE APPROVED BY ARCHITECT PRIOR TO UNIT INSTALLATION.

COORDINATE EQUIPMENT LOCATION WITH LIGHTS, BLDG. STRUCTURE, PIPING, SWAY BRACING AND SKYLIGHTS. SEE ARCHITECTURAL, STRUCTURAL AND ELECTRICAL PLANS. LOCATE SALES FLOOR AC UNITS BETWEEN RACKS. CENTER SUPPLY DUCT DROP OPENING BETWEEN JOISTS. REQUIRED CLEARANCE FOR ROOFTOP UNIT IS SHOWN.

FIRE PROTECTION NOTES

1. M.C. TO DISCONNECT AND REMOVE EXISTING DUCT SMOKE DETECTOR(S) FROM UNITS WITH BELOW DESIGNATION(S). COORDINATE REMOVAL OF ANY DUCT SMOKE DETECTOR WITH WAREHOUSE MANAGER AND FIRE ALARM CONTRACTOR FOR REMOVAL FROM FIRE ALARM PANEL.

(A) DUCT SMOKE DETECTOR NOT REQUIRED PER IMC 606.2 EXCEPTION FOR SYSTEM INCAPABLE OF SPREADING SMOKE BEYOND THE ENCLOSING WALLS, FLOORS AND CEILINGS OF THE ROOM OR SPACE IN WHICH SMOKE IS GENERATED.

(B) DUCT SMOKE DETECTOR NOT REQUIRED FOR UNIT WITH LESS THAN 2000 CFM PER IMC 606.2.2.

(C) UNIT REMOVED FROM ROOF. REMOVE CORRESPONDING DUCT SMOKE DETECTOR.

(E) HVLS FAN TO BE INTERLOCKED WITH FIRE SPRINKLERS TO SHUT OFF UPON RECEIVING A WATERFLOW SIGNAL PER NFPA 72.

CONTRACTOR IS TO BE PRESENT DURING TEST WITH FIRE ALARM SERVICE COMPANY TO DEMONSTRATE FUNCTIONALITY.

CONTRACTOR IS TO BE PRESENT DURING ANY TEST(S) REQUIRED BY JURISDICTION.

HVAC LEGEND

24/48	AIR DUCT – FIRST # IS SIDE SHOWN
	FLEXIBLE DUCT CONNECTION
TV	TURNING VANE
	SUPPLY DUCT UP
	RETURN DUCT UP
	SUPPLY DUCT DOWN
	RETURN DUCT DOWN
	AIR VOLUME DAMPER
	CEILING DIFFUSER
	SQUARE TO ROUND DUCT TRANSITION
C	CONDENSATE DRAIN
AC 36	AIR CONDITIONER #1
T	THERMOSTAT
T	THERMOSTAT (W/LOCKING COVER)
S	SENSOR
RH	HUMIDISTAT
CO^2	CARBON DIOXIDE
CONT.	CONTINUATION
TYP.	TYPICAL
CFM	CUBIC FEET PER MINUTE
DB	DRY BULB TEMPERATURE
DG	DOOR GRILLE
WB	WET BULB TEMPERATURE
MBH	1,000 BRITISH THERMAL UNITS/HR.
ESP	EXTERNAL STATIC PRESSURE
EG	EXHAUST GRILLE
RG	RETURN GRILLE
CD	CEILING DIFFUSER
RA	RETURN AIR
SA	SUPPLY AIR
CDF	CEILING DIFFUSER WITH FIRE DAMPER
RGF	RETURN GRILLE WITH FIRE DAMPER
CDFP	CEILING DIFFUSER FOOD PREPARATION
RGFP	RETURN GRILLE FOOD PREPARATION
CO	CLEAN OUT
VD	VOLUME DAMPER
MBS	METAL BUILDING SUPPLIER
M.C	MECHANICAL CONTRACTOR
G.C	GENERAL CONTRACTOR

NOTE:
1) ALL PVC ON EXTERIOR OF BUILDING TO BE SCHEDULE 80.
2) PAINT ALL METAL & PVC PIPING EXPOSED TO WEATHER.

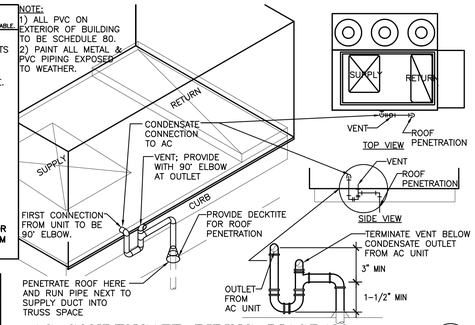

AC CONDENSATE PIPING DIAGRAM 1
SCALE: NONE

ROOF TOP MECHANICAL UNIT HOLD DOWNS (WIND SPEED EXPOSURE PER STRUCTURAL)

OPERATING WEIGHT (LBS)	110 M.P.H.	115 M.P.H.	120 M.P.H.	130 M.P.H.	140 M.P.H.	150 M.P.H.	160 M.P.H.	170 M.P.H.	170-175 M.P.H.
1-6 TON WT = (600-950#)	3	4	4	4	5	6	7	8	12
6-10 TON WT = (1000-1400#	3	3	3	4	5	5	6	7	11
9-15 TON WT = (1300-2000#	3	3	3	4	5	5	6	7	11
16-30 TON WT = (2200-3200#	4	4	4	5	6	8	9	10	16

NOTE:
- NUMBER OF HOLD DOWN ARE REQUIRED AT EACH LONG SIDE OF UNIT.
- EQUALLY SPACE CABLES ON BOTH SIDE OF UNIT.
- INSTALL CABLES MAX 6" FROM SHORT SIDE OF UNIT.

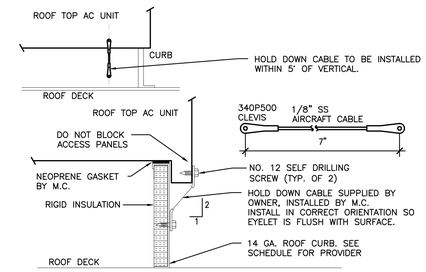

AC UNIT HOLD DOWN CABLE 3
SCALE: NONE

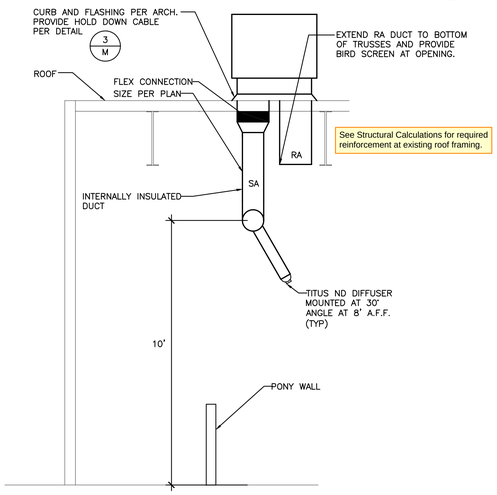

TIRE INSTALL AC UNIT & DUCT ELEVATION DETAIL 11
SCALE: NONE

City of Puyallup Development & Permitting Services ISSUED PERMIT
Building | Planning | Engineering | Public Works | Fire | Traffic

City of Puyallup Building REVIEWED FOR COMPLIANCE
BSnowden
04/23/2025
9:14:01 AM

The approved construction plans, documents, and all engineering must be posted on the job at all inspections in a visible and readily accessible location.

Full sized legible color plans are required to be provided by the permitee on site for inspection.

Approval of submitted plans is not an approval of omissions or oversights by this office or non compliance with any applicable regulations of local government. The contractor is responsible for making sure that the building complies with all applicable codes and regulations of the local government.

AIR TERMINAL SCHEDULE

SYMBOL	MANUFACTURER	SERVICE	MODEL	OPTION	DAMPER NECK	FRAME	LOCATION *
ND	TITUS	SUPPLY	TND-AA	VOLUME DAMPER		ROUND	TIRE CENTER

* VERIFY NUMBER OF DIFFUSERS AND ALL LOCATIONS ON PLANS – DIFFUSER IS NOT REQUIRED IF NOT ON PLANS
** MOUNT AT 45°ANGLE DOWN AT FLOOR.

HVAC EQUIPMENT SCHEDULE–S.O.I.C.

COOLING DESIGN TEMPERATURES: 90.6°F DB, 66.8°F MCWB, 19.2°F DAILY RANGE HEATING DESIGN TEMPERATURES: 43°F DB 99%, 39°F DB 99.6% ELEVATION: 95 FT

SYMBOL	ITEM	SERVES	MFR/#	DESCRIPTION	ELECT.	WEIGHT	REFERENCE	REMARKS	NOTES
AC-36	AIR CONDITIONER	TIRE INSTALL	AAON RN-010-3O E609-000	105.20 MBH TOTAL COOLING, 104.03 MBH SENSIBLE, 108.9°F AWB, 84.7°F EDB, 67.6 °F EWB, 4000 CFM @ 0.5" ESP, EER = 8.3 HEAT PUMP TOTAL CAPACITY 82.8 MBH, COP = 2.54	460V/3ø 40 MOCP 22 FLA	UNIT:1095# DUCT:570# CURB:79# DESIGN:1935#	PLAN ME-1 1,3,11/ME	500 CFM MIN O/A	(2)

GENERAL NOTES
- All equipment furnished by costco, installed by m.c. contact costco purchasing dept. to coordinate delivery time @ email: skbrewer@costco.com
- AC units provided with D.D.C. communications interface controlled by building management system by controls installer. sensor/t'stat S.I.O. sensors @ +72", t'stats at 48" A.F.F.
- Contractor to install all items listed in equipment submittal per manufacturers installation and operation manual
- Curb for built up roof by G.C. unless otherwise noted

(2) *ECONOMIZER WITH DDC ACTUATOR *115V CONVENIENCE OUTLET – FACTORY WIRED *POWER SWITCH 100 AMPS *2" PLEATED 30% EFFICIENT FILTERS *PHASE & BROWN OUT PROTECTION *FIELD INSTALLED DDC CONTROLS FURNISHED BY OTHERS *DIGITAL SCROLL COMPRESSOR

ISSUED FOR PERMIT

CHECKED: PKR/ANT/JGM
DRAWN: JRS/FB
REVISION DATE:
ISSUE DATE: APRIL 12, 2024
ARCHITECT REFERENCE NO:
PROJECT NO: 23-557

© NO PART OF THIS DOCUMENT MAY BE USED OR COPIED IN WHOLE OR IN PART WITHOUT THE PRIOR WRITTEN CONSENT OF T.E.INC.

PARTIAL FLOOR PLAN, TIRE INSTALL HVAC PLAN, DETAILS, SCHEDULES, LEGENDS AND NOTES

PRMH20250495

04/12/24	ISSUED FOR PERMIT

T.E., Inc.
830 N. RIVERSIDE DRIVE
SUITE #200
RENTON, WA 98057
PHONE: 425-970-3753
FAX: 425-970-3756

TIRE INSTALL HVAC

WAREHOUSE #660
1201 39TH AVENUE SW
PUYALLUP, WA 98373

ME-1

K:\2023\550-559\23-557 - Costco - Puyallup (#660) - WA - HVAC Tire Install_557ME-1.dwg, 4/12/2024 7:49:23 AM, TLeitch