Bradley Heights Apartments

A 236-Unit Apartment Development

Puyallup, Washington

Bradley Heights SS LLC

PROJECT TEAM

Owner/Developer	Bradley Heights SS LLC 614 Boylston Ave E Seattle, WA 98102 (206) 557-7236
Architect:	Milbrandt Architects, Inc., P.S. 25 Central Way, Suite 210 Kirkland, WA 98033 (425) 454-7130
Structural Engineer	Solutions 4 Structure, Inc. 11605 135th St Ct E Puyallup, WA 98374 (253) 268-2923
Civil Engineer	Azure Green Consultants 409 East Pioneer Puyallup, WA 98372 (253) 770-3144
Landscape Architect	Nature By Design 1320 Alameda Avenue, Suite B Fircrest, WA 98466 (253) 460-6067
MEP Engineer	Robison Engineering Inc. 19401 40th Avenue W, Suite 302 Lynnwood, WA 98036 (206) 364-3343

PROJECT INFORMATION

Site Address:	2 206 27th Ave SE, Puyallup, WA 98374
Project Description:	Construction of 236 wood framed apartment units in eight stacked flat buildings along with a leasing amenity building.
Site Area:	7.785 acres (+/- 339,107 SQ. FT.)
Tax Parcel Number:1	419036006
Occupancy Type:	All Apartment Buildings are R2 occupancy.
Type of Construction	All Apartment Buildings are Type V-B construction with NFPA 13R automatic sprinklers .
Applicable Codes:	2018 International Building Code 2018 Uniform Plumbing Code 2018 Washington State Energy Code 2018 International Mechanical code 2018 International Fire Code 2022 National Electrical Code ICC/ANSI A117.1-2009 Standard Washington State Amendments as modified and adopted by the local jurisdiction.

RATED ASSEMBLIES

Rated assemblies shall be provided in accordance with IBC section 420

Assembly	Fire Rating	Detail
Common walls separating dwelling units:	1-hour	4/D1
Exterior walls:	non-rated	1/D1
Interior bearing walls:	non-rated	2/D1
Interior non-bearing walls:	non-rated	2/D1
Corridor-to-unit walls:	1-hour	3/D1
Floor/ceiling:	1-hour	13/D1
Roof/ceiling:	1-hour	17/D1
Penetrations (firestopping)	Per situation	17/D8 D9 1
Stair fire barrier wall:	1-hour @ 3-story 2-hour @ 4-story	3/D1 7/D1

Fire Alarm systems and smoke alarms shall be provided in accordance with IBC section 420.5
Refer to unit plan sheets for smoke detector locations and requirements.

GENERAL NOTES

1. Comply with 2018 IBC and all applicable codes and ordinances of the local jurisdiction and the State of Washington.
2. Do not scale drawings.
3. Verify all rough-in dimensions for equipment provided in this contract or by others.
   All rough-ins shall be approved and fireblocking shall be installed prior to framing inspection.
4. Verify size and location of and provide all openings through floors and walls, furring, anchors, inserts, rough bucks and backing for surface mounted items.
5. Provide furring as required to conceal mechanical and electrical work in all finished areas.
6. All swinging doors not located by dimensions on plans, interior elevations, or details shall be 3" from face of stud to edge of rough openings or centered between room partitions as shown.
7. Plans are drawn assuming the following rough openings:
   Swinging doors: Nominal size +2".
   Bi-Fold doors: Nominal size +1-1/2".
   Bi-Pass doors: Nominal size +0".
   Windows: Nominal size +0".
   Sliding glass doors: Nominal size +0".
8. Fill where required with earth free from organic material. Compact fill in 12" layers maximum.
9. "Finish Floor" refers to the top of concrete slab or top of wood floor sheathing .
10. Exterior walls shall be 2x6 studs at 16" o.c. and interior walls shall be 2x4 studs at 16" o.c., unless noted otherwise.
11. Unless otherwise noted, plan dimensions are to face of studs and face of concrete walls.
12. Refer to interior elevations for cabinet and counter lengths, dimensions, countertop materials and detail reference. Verify all existing dimensions before installation.
13. Provide caulking between sole plates and subfloor and between rim joists at both top plate and subfloor.
14. Hydrants shall be in service prior to start of framing.
15. Through penetrations and membrane penetrations of rated wall or floor/ceiling assembly will require firestopping per 2018 IBC Section 714. See detail sheets for diagram of specifics.
16. Shall be no asbestos used on this project.
17. All Tub-Shower valves installed shall conform to UPC 408.3 & ASSE 1016 or ASME A112.18.1
18. Milbrandt Architects is not responsible for construction means, methods, techniques or procedures, or for the safety precautions and programs in connection with the work, and is not responsible for the failure of any contractor or subcontractor to carry out the work in accordance with the various contract documents and or governing jurisdiction, regardless of what is shown on these drawings.

FEDERALLY DECLARED SAFE HARBOR

Declared Safe Harbor: HUD Fair Housing Accessibility Guidelines published on March 6, 1991 and the Supplemental Notice to Fair Housing Accessibility Guidelines: Questions and Answers about the Guidelines, published on June 28, 1994.

ACCESSIBILITY

Design is based on the 2018 IBC Chapter 11 which has been amended by the State of Washington, & 2009 ICC A117.1 Accessible & Useable Buildings & Facilities.

None of the buildings are an elevator type building.

There are a total of 84 one-story dwelling units at ground level. All ground floor units are 1 or 2-bed unit designs. Provided total 84 accessible units: 12 Type A and 72 Type B units. Type A units meet the requirements for Type B units.

The 12 Type A units are proportioned as follows (see Site Plan):

- (7) 1-Bed units (1 BR) in each of Buildings A, C, D, E, F & G- for a total of 7.
- (5) 2-Bed units (2 BR) in Buildings A, D, E, F & G - for a total of 5.

Parking:

Section 1106.2 IBC requires 2% of each proposed parking stall type to be accessible.

Of the 354 total open stalls, 12 are accessible, including 5 van stalls. Each accessible open stall is indicated by the wheelchair symbol on the site plan and further designated by the detail symbols 10/A3.

VENTILATION NOTES

1. Design Criteria: 2018 International Mechanical Code with Washington State Amendments.
2. System Type: Balanced whole house fan system with energy recovery ventilator
3. Use: Group R occupancy.
4. Specifics: See mechanical plans by others.

ENERGY NOTES

Reference: 2018 WSEC
Chapter 4 using climate zone catagory 5 & marine 4 for all calculations.

All residential units shall comply with the Requirements By Component Table 402.1.1.
Including but not limited to the following:

Code Requirements		Associated Notes/Details Showing Compliance
Window U-Factor	.24 or better	See Insul. Notes on sheets U1, U2, U3, U4, U5
Ceiling R-Value	R-49	13 / D1
Wood Frame Wall R-Value	R-21 int.	1, 3, 4, 7 & 8 / D1
Floor R-Value	R-30	N/A
Slab R-Value & Depth	R-10, 2ft	1, 3, 5 & 6/ D2

"int." (intermediate framing) denotes standard framing 16" o.c. with headers insulated with a min. of R-10 (see 6/D6) .

All units need to have a certificate posted within 3 feet of the electrical distribution panel listing the following information: R-values, U-values, duct air leakage test results, building envelope air leakage test results, types and efficiencies of heating, cooling and service water heating equipment per R401.3

All insulation shall comply with table R402.4.1.1 WSEC

Hot water piping shall be insulated to a minimum of R-3 per R403.5.2

Water heaters in unheated spaces, or on concrete floors shall be placed on minimum of R-10 incompressible insulated surface per R403.5.5

Mechanical ventilation shall be provided per R403.6

A minimum of 90% of all permanently installed lamps in lighting fixtures shall be high-efficacy lamps per R404.1

See Insulation Notes on the Unit Plans, and Insulation and Energy Notes on sheet D7.

2 Energy Credits used (see 2018 WSEC table 406.3 for all requirements):

Fuel Normalization Credit System Type 4	**0.0 CREDITS**
Option 2.1 Air Leakage Control	**1.0 CREDITS**
Option 3.4 Ductless Mini-Split Heat Pump System	**2.0 CREDITS**
Option 7.1 Appliance Package	**1.5 CREDITS**
TOTAL PROVIDED	**4.5 CREDITS**

FIRE SYSTEMS

Buildings shall have an NFPA 13R sprinkler system installed throughout per 2018 IBC Section 903.3.1.2 which shall include a notification appliance which is activated upon sprinkler flow. Any alarms, bells or lights required due to the design of the sprinkler system or integral with the sprinkler system shall be considered part of the sprinkler system. The sprinkler system design, therefore, needs to include any and all integrated alarms.

Plans and specifications for sprinklers shall be submitted to the city of Puyallup as a separate permit for review and approval before installation.

DESIGN LOADS

See structural notes. Sheet S1.0

DEFERRED SUBMITTALS

Shop drawings and calculations are required for:

1. Firestopping details. Firestopping methods and materials shall be determined by the Contractor except where details or notes are indicated in these drawings. Firestopping locations are indicated in part by detail sheet D9. Contractor shall submit UL assembly details and product cuts of all relevant situations to the Architect for conformance to the building design. Upon the Architect's approval, they shall be submitted to the Building Official for approval. Firestopping shall not be installed without City approval. 1

SEPARATE PERMITS

The following required permits will be submitted separately:
1. Automatic Fire Sprinkler System (See fire systems note, this sheet).
2. Fire Alarm System.

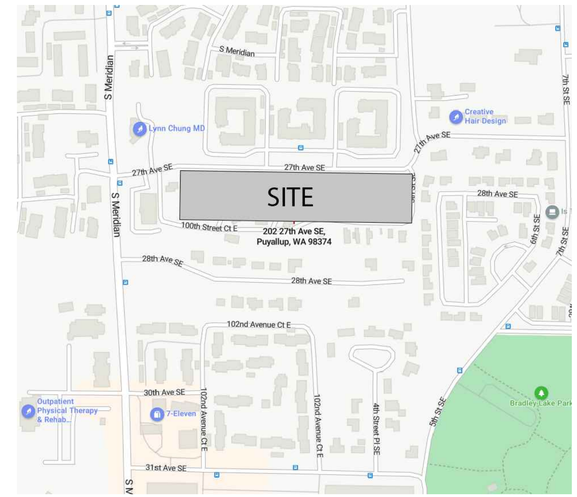

VICINITY MAP

Approval of submitted plans is not an approval of omissions or oversights by this office or non compliance with any applicable regulations of local government. The contractor is responsible for making sure that the building complies with all applicable codes and regulations of the local government.

The approved construction plans, documents, and all engineering must be posted on the job at all inspections in a visible and readily accessible location.

Full sized legible color plans are required to be provided by the permitee on site for inspection.

City of Puyallup
Development & Permitting Services
ISSUED PERMIT

Building	Planning
Engineering	Public Works
Fire	Traffic

City of Puyallup
Building
REVIEWED FOR COMPLIANCE
SKinnear
05/14/2025
4:16:08 PM
CITY OF PUYALLUP STATE OF WASHINGTON

MILBRANDT ARCHITECTS
25 Central Way, Suite 210
Kirkland, Washington 98033
P: 425.454.7130 F: 425.658.1208
Web: www.milbrandtarch.com

© Copyright 2023
Milbrandt Architects, INC., P.S.
All rights reserved

11063 REGISTERED ARCHITECT
ANNA P. THOMPSON
STATE OF WASHINGTON

Cover Sheet

Bradley Heights Apartments

Puyallup, Wa

Timberlane Partners

Revisions

No.	Date	Description
1	8-30-24	Owner Changes/ Permit Corrections

PRMU20240279

Initial Publish Date:
Date Plotted: 5-6-25
Job No.: 23-06
Drawn By: TMK/HDM/APT
Sheet No.: A

H:\2306\COVER (A1).DWG

Bradley Heights Apartments

Building H

Puyallup, Washington

Bradley Heights SS LLC

Bradley Heights Building Areas

Bldg Letter	Floor Level	Unit: 1-Bed End	Unit Area (SF)	Deck Area (SF)	1-Bed End-Alt	Unit Area (SF)	Deck Area (SF)	1-Bed Int-1	Unit Area (SF)	Deck Area (SF)	1-Bed Int-2	Unit Area (SF)	Deck Area (SF)
A	Bsmt	**1**	712	67				**1**	684	61	**1**	684	71
	1st	**2**	1424	134				**2**	1368	122	**2**	1368	142
	2nd	**2**	1424	134				**2**	1368	122	**2**	1368	142
	3rd	**1**	712	67	**1**	625	78	**1**	684	61	**1**	684	71
B	Bsmt												
	1st												
	2nd												
	3rd												
C	1st							**4**	2736	244	**4**	2736	284
	2nd							**4**	2736	244	**4**	2736	284
	3rd							**4**	2736	244	**4**	2736	284
D	Bsmt							**2**	1368	122	**2**	1368	142
	1st							**4**	2736	244	**4**	2736	284
	2nd							**4**	2736	244	**4**	2736	284
	3rd							**2**	1368	122	**2**	1368	142
E	Bsmt							**1**	684	61	**1**	684	71
	1st							**1**	684	61	**1**	684	71
	2nd							**1**	684	61	**1**	684	71
	3rd												
F	Bsmt							**1**	684	61	**1**	684	71
	1st							**1**	684	61	**1**	684	71
	2nd							**1**	684	61	**1**	684	71
	3rd												
G	1st							**4**	2736	244	**4**	2736	284
	2nd							**4**	2736	244	**4**	2736	284
	3rd							**4**	2736	244	**4**	2736	284
H	1st							**2**	1368	122	**2**	1368	142
	2nd							**2**	1368	122	**2**	1368	142
	3rd							**2**	1368	122	**2**	1368	142
		6			**1**			**54**			**54**		

Bldg Letter	Floor Level	1-Bed Int-Alt-1	Unit Area (SF)	Deck Area (SF)	1-Bed Int-2	Unit Area (SF)	Deck Area (SF)	1-Bed Int-3	Unit Area (SF)	Deck Area (SF)	1-Bed Int-4	Unit Area (SF)	Deck Area (SF)
A	Bsmt												
	1st												
	2nd												
	3rd	**1**	634	74	**1**	634	86						
B	Bsmt												
	1st												
	2nd												
	3rd												
C	1st												
	2nd												
	3rd												
D	Bsmt												
	1st												
	2nd												
	3rd	**2**	1268	148	**2**	1268	172						
E	Bsmt												
	1st							**1**	795	57	**1**	795	57
	2nd							**1**	795	57	**1**	795	57
	3rd	**1**	634	74	**1**	634	86	**1**	795	57	**1**	795	59
F	Bsmt												
	1st							**1**	795	57	**1**	795	57
	2nd							**1**	795	57	**1**	795	57
	3rd	**1**	634	74	**1**	634	86	**1**	795	57	**1**	795	59
G	1st												
	2nd												
	3rd												
H	1st												
	2nd												
	3rd												
		5			**5**			**6**			**6**		

Bldg Letter	Floor Level	2-Bed	Unit Area (SF)	Deck Area (SF)	2-Bed Alt	Unit Area (SF)	Deck Area (SF)	2-Bed-2	Unit Area (SF)	Deck Area (SF)
A	Bsmt				**1**	1019	60			
	1st	**1**	1019	66	**1**	1019	60			
	2nd	**1**	1019	66	**1**	1019	60			
	3rd	**1**	1019	66	**1**	980	60			
B	Bsmt				**2**	2038	120			
	1st	**2**	2038	132	**2**	2038	120			
	2nd	**2**	2038	132	**2**	2038	120			
	3rd	**2**	2038	132	**2**	1960	120			
C	1st	**4**	4076	264						
	2nd	**4**	4076	264						
	3rd	**4**	4076	264						
D	Bsmt				**2**	2038	120			
	1st	**2**	2038	132	**2**	2038	120			
	2nd	**2**	2038	132	**2**	2038	120			
	3rd	**2**	2038	132	**2**	1960	120			
E	Bsmt				**2**	2038	120			
	1st				**2**	2038	120	**2**	2230	124
	2nd				**2**	2038	120	**2**	2230	124
	3rd				**2**	1960	120	**2**	2230	124
F	Bsmt				**2**	2038	120			
	1st				**2**	2038	120	**2**	2230	124
	2nd				**2**	2038	120	**2**	2230	124
	3rd				**2**	1960	120	**2**	2230	124
G	1st	**4**	4076	264						
	2nd	**4**	4076	264						
	3rd	**4**	4076	264						
H	1st	**4**	4076	264						
	2nd	**4**	4076	264						
	3rd	**4**	4076	264						
		51			**36**			**12**		

Bldg Letter	Floor Level	Other Unheated: Misc. (a)	Stair 1	Area (SF)	Stair 2	Area (SF)	Total Heated Area (SF)	Total Unheated Area (b)	Total Floor Area (SF)	Total Building Area (SF)	Total Allowable Bldg. Area (d)	Units Per Building
A	Bsmt	118			**2**	422	3099	799	3898			
	1st		**2**	520	**2**	350	6198	1394	7592	22633		
	2nd		**2**	350	**2**	478	6198	1352	7550	(Plus 3358 SF	See Sheet	
	3rd		**2**	478	**2**	478	5972	1519	7491	Basement)	A4	28
B	Bsmt	69			**1**	211	2038	400	2438			
	1st		**1**	260	**1**	175	4076	687	4763	14233	21,000 SF	
	2nd		**1**	175	**1**	239	4076	666	4742	(Plus 2438 SF	(Plus 7,000 SF	
	3rd		**1**	239	**1**	239	3998	730	4728	Basement)	Basement)	14
C	1st	20	**6**	1560			9548	2372	11920			
	2nd		**6**	1050			9548	1842	11390		See Sheet	
	3rd		**6**	1434			9548	2226	11774	35084	A4	36
D	Bsmt	167			**3**	633	4774	1184	5958			
	1st		**3**	780	**3**	525	9548	2085	11633	34743		
	2nd		**3**	525	**3**	717	9548	2022	11570	(Plus 1184 SF	See Sheet	
	3rd		**3**	717	**3**	717	9270	2270	11540	Basement)	A4	42
E	Bsmt	118			**2**	422	3406	792	4198			
	1st				**2**	350	7226	840	8066	24306		
	2nd				**2**	478	7226	968	8194	(Plus 4198 SF	See Sheet	
	3rd				**2**	478	7048	998	8046	Basement)	A4	28
F	Bsmt	118			**2**	422	3406	792	4198			
	1st				**2**	350	7226	840	8066	24306		
	2nd				**2**	478	7226	968	8194	(Plus 4198 SF	See Sheet	
	3rd				**2**	478	7048	998	8046	Basement)	A4	28
G	1st	20	**6**	1560			9548	2372	11920			
	2nd		**6**	1050			9548	1842	11390		See Sheet	
	3rd		**6**	1434			9548	2226	11774	35084	A4	36
H	1st	20	**4**	1040			6812	1588	8400			
	2nd		**4**	700			6812	1228	8040		See Sheet	
	3rd		**4**	956			6812	1484	8296	24736	A4	24
									Total Gross SF	**235815**		**236**

All buildings are Type V-B construction; all occupancies are R-2; all have NFPA 13R sprinkler systems throughout.
a. Misc. Areas include SF of sprinkler riser rooms and basement storage rooms.
b. Unheated Areas include SF of Decks, Patios, storage & sprinkler rooms.
c. Base Area allowed is 7000SF per floor for Type V-B construction (Table 506.2). See area increase diagrams on sheet A4 for total area allowed.

Unit Area Summary

Unit		Unit SF	Patio/Deck SF
1-Bed-End	1BR/1BA	712	67
1-Bed-End-Alt	1BR/1BA	625	78
1-Bed-Int-1	1BR/1BA	684	61
1-Bed-Int-2	1BR/1BA	684	71
1-Bed-Int-Alt-1	1BR/1BA	634	74
1-Bed-Int-Alt-2	1BR/1BA	634	86
2-Bed	2BR/2BA	1019	66/60
2-Bed-Alt	2BR/2BA	980	60
2-Bed-2	2BR/2BA	1115	62
1-Bed-Int-3	1BR/1BA	795	57
1-Bed-Int-4	1BR/1BA	795	59

SINGLE EXITS
Per IBC 1006.3.2 section 5, Individual single-story or multistory dwelling units shall be permitted to have a single exit or access to a single exit provided that the dwelling unit has a maximum occupant load of 20, is equipped throughout with an automatic sprinkler system in accordance with section 903.3.1.1 or 903.3.1.2, is provided with emergency escape and rescue openings in accordance with section 1030, and the common path of egress travel does not exceed 125'.

LIST OF DRAWINGS

A Cover Sheet
A1 Building Areas and Statistics
A2 Site Plan
A3 Site Standards
A4 Area Increase Diagram

B12 Building H - Building Floor Plans

U1 1-Bed-Int Unit - Basement & 1st Level Floor Plans
U2 1-Bed-Int Unit - 2nd & 3rd Level Floor Plans
U4 2-Bed Unit - Basement & 1st Level Floor Plans
U5 2-Bed Unit - 2nd & 3rd Level Floor Plans
U6 Interior Elevations - 1-Bed-Int-1, 1-Bed-Int-2, - 1-Bed-Int-Alt-1, & 1-Bed-Int-Alt-2
U9 Interior Elevations - 2-Bed & 2-Bed-Alt
U11 Accessibility Standards
U12 Stair 1 - Floor Plans
U14 Door Schedule

F14 Building H - Partial Architectural Foundation Plan
F15 Building H - Partial Architectural Foundation Plan

R8 Building H - Roof Plan

E17 Building H - Exterior Elevations
E18 Building H - Building Sections
E19 Building Glazing Diagram - Building H
S1.0 Structural Notes - Building H
S1.1 Structural Notes & Tables - Building H
S1.2 Shear Wall Notes - Building H
S1.3 Shear Wall Notes - Building H
S2.19 Foundation & 2nd Floor Framing Plans - Building H
S2.20 3rd Floor & Roof Framing Plans - Building H
S3.0 Details - Building H
S3.1 Details - Building H
S4.0 Details - Building H
S4.1 Details - Building H
S5.0 Details - Building H
S5.1 Details - Building H
D1 Details
D2 Details
D3 Details
D4 Details
D5 Details
D6 Details
D7 Details
D8 Details
D9 Details
BE1 Building Envelope Details
BE2 Building Envelope Details
BE3 Building Envelope Details
BE4 Building Envelope Details
BE5 Building Envelope Details
M0.0 Legend, General Notes & Drawing Index
M0.1 Project Notes
M0.2 Tables & Calculations
M0.3 Mechanical Schedules & WSEC Forms
M2.0 Building H - HVAC Plans
M2.0 Building H - HVAC Plans
M3.0 HVAC Enlarged Plan
M3.1 HVAC Enlarged Plan
E0.00 Electrical Cover Sheet
E0.01 Electrical Cover Sheet
E0.10 Power Site Plan
E0.11 Power Site Plan
E0.12 Lighting Site Plan
E0.13 Lighting Site Plan
E1.01 1st Floor Lighting Plan
E1.02 2nd & 3rd Floor Lighting Plan
E1.50 Lighting Notes
E3.00 1st & 2nd Floor Power Plans
E3.01 3rd Floor & Roof Power Plans
E5.00 Unit Plan Notes
E5.01 Unit Electrical Plans
E5.02 Unit Electrical Plans
E6.00 One-Line Diagram & Notes
E6.01 Panel Schedule

P0H.00 Plumbing - Legend, General Notes & Drawing Index
P0H.01 Plumbing Notes & Tables
P0H.02 Plumbing Calculations
P0H.03 Plumbing Schedules
P2H.00 Underslab Waste & Vent Plan
P2H.01 1st Floor Waste & Vent Plan
P2H.02 2nd Floor Waste & Vent Plan
P2H.03 3rd Floor Waste & Vent Plan
P3H.01 1st Floor Plumbing Supply Plan
P3H.02 2nd Floor Plumbing Supply Plan
P3H.03 3rd Floor Plumbing Supply Plan
P7H.00 Details

H:\2306\COVER (A1).DWG

MILBRANDT ARCHITECTS
25 Central Way, Suite 210
Kirkland, Washington 98033
P: 425.454.7130 F: 425.658.1208
Web: www.milbrandtarch.com

© Copyright 2023
Milbrandt Architects, INC., P.S.
All rights reserved

11063 REGISTERED ARCHITECT
ANNA P. THOMPSON
STATE OF WASHINGTON

Cover Sheet
Building Areas and Statistics

Bradley Heights Apartments
Puyallup, Wa

Timberlane Partners

Revisions

No.	Date	Description
1	8-30-24	Owner Changes/ Permit Corrections

PRMU20240279

Initial Publish Date:
Date Plotted: 5-6-25
Job No.: 23-06
Drawn By: TMK/HDM/APT
Sheet No.: **A1**

Sunset Garden Senior Living Apartments

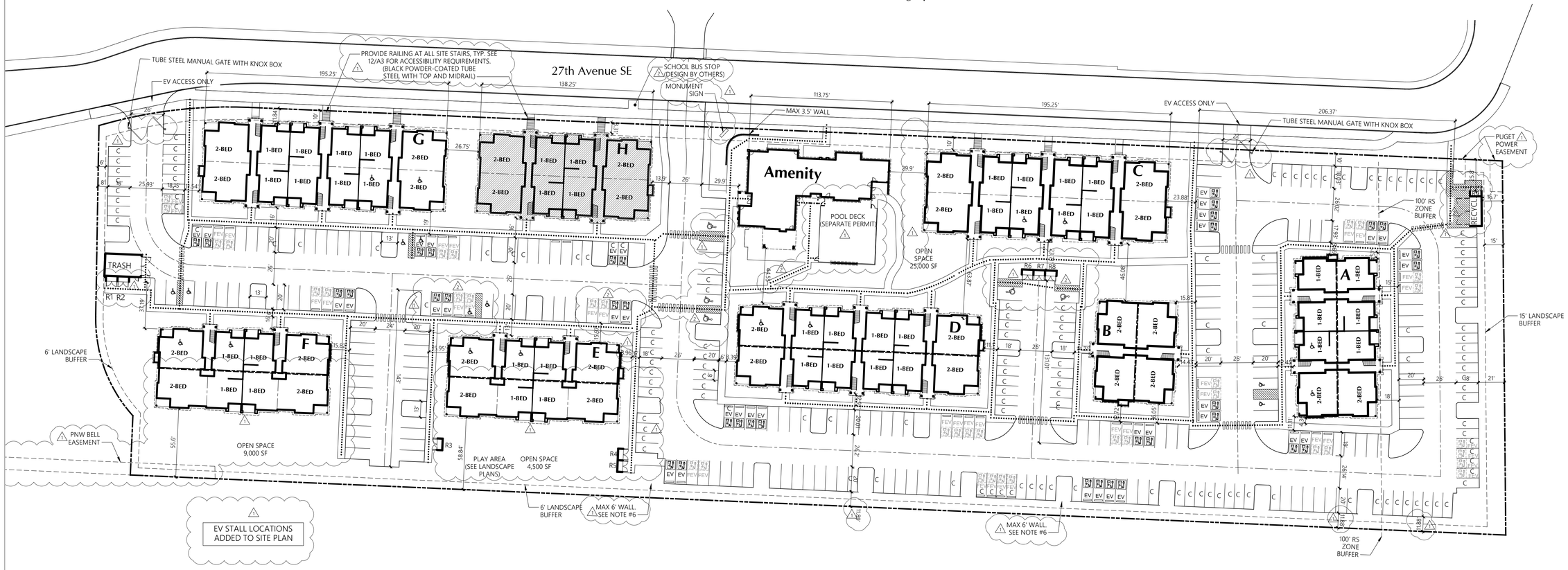

SITE PLAN

236 UNITS

1" = 40'

SITE INFORMATION

SITE ADDRESS:	206 27th Ave SE, Puyallup, WA
PARCEL #:	419036006
SITE AREA:	339,107 SF (7.785 Acres)
ZONE:	RM-CORE
SETBACKS:	NORTH/FRONT : 10 FT setback to buildings WEST/SIDE : 0 FT Building setback - 6 FT landscape buffer SOUTH/REAR : 0 FT Building setback - 6 FT landscape buffer EAST/SIDE : 25 FT Building setback - 15 ft landscape buffer
BUILDING HEIGHT:	50' Max
DENSITY:	Min 16 units per acre (125 units) no Max density
LOT COVERAGE:	Max 90%
LANDSCAPE AREA:	Min 10% of net lot area (33,910 SF)
OPEN SPACE:	10% of net lot area (33,910 SF) 38,500 SF provided
PRIVATE OPEN SPACE:	60 SF per ground floor unit 10' x 6' per upper story unit
PARKING:	1.5 PARKING SPACES PER UNIT Required Parking: 354 Stalls Provided Parking: 354 Stalls
EASEMENTS:	no existing easements on site

PARKING SUMMARY

Parking Stalls Required		354	
Standard Stalls		125	
Compact Stalls	41.5%	99	
Parallel Stalls		0	
Carport Stalls		117	
Attached Garage Stalls		0	
Detached Garage Stalls		0	
Accessible Standard Stalls		6	
Accessible Van Stalls		4	
Accessible Parallel Stalls		0	
Accessible Carport Stalls		2	
Accessible Garage Stalls		0	
Tandem Stalls		0	
Tandem Garage Stalls		0	
Subtotal		353	1.50 Stalls / D.U.
Aprons		0	
Total Parking Stalls Provided		353	1.50 Stalls / D.U.

UNIT COUNT

1 BED	137 (58%)
2 BED	99 (42%)
TOTAL	**236**

EV STALL COUNT

Electric Vehicle Charging stations
Provided: 36 Stalls (10% of provided parking)
Required: 0 Stalls^

Future Electric Vehicle Stall Infrastructure
Provided: 36 Stalls (10%of provided parking)
Required: 36 Stalls (10% of provided parking)^

Electrical panels sized to accommodate 72 EV Stalls (20% of provided parking)^

^ Requirements from section 429 of 2018 IBC Washington State Amendment.

PERMIT BLDG NAME	PUYALLUP ADDRESS
A	206 27TH AVE SE, BLDG J
B	206 27TH AVE SE, BLDG H
C	206 27TH AVE SE, BLDG G
D	206 27TH AVE SE, BLDG E
E	206 27TH AVE SE, BLDG C
F	206 27TH AVE SE, BLDG A
G	206 27TH AVE SE, BLDG B
H	206 27TH AVE SE, BLDG D
CLUBHOUSE	206 27TH AVE SE, BLDG F

SITE NOTES

1) TYPICAL SIDEWALK WIDTH IS 6'
2) A MINIMUM CLEAR WIDTH OF 44" IS REQUIRED FOR ALL EXTERIOR ACCESSIBLE ROUTES PER WASHINGTON STATE AMENDMENT SECTION 1101.2.1
3) SEE SHEET A3 FOR SITE ACCESSIBILITY STANDARDS
4) SEE CIVIL SITE PLAN PERMIT DRAWINGS FOR SPECIFIC UTILITY, ROAD AND GRADING INFORMATION
5) POOL TO BE UNDER SEPARATE PERMIT
6) ANY WALLS 4' OR HIGHER REQUIRE A SEPARATE CITY BUILDING PERMIT. SEE CIVIL PLAN SET FOR SITE WALL DETAILS.

SITE KEY

2'-6" STEP LOCATION

TYPICAL STANDARD STALL (20' x 9')

TYPICAL COMPACT STALL (18' x 8')

CARPORT LOCATION

ACCESSIBLE ROUTE OF TRAVEL (A.R.T.)*
RUNNING SLOPE NOT TO EXCEED 1:20
CROSS SLOPE NOT TO EXCEED 1:48
RAMPS NOT TO EXCEED 1:12

FIRE HYDRANT LOCATIONS

EV ELECTRIC VEHICLE CHARGING STALL*

FEV FUTURE ELECTRIC VEHICLE CHARGING STALL INFRASTRUCTURE

* Future electric vehicle stalls shall provide conduit from the electrical panel to either a pull box in the vicinity of the designated future electric vehicle charging locations or stub above grade in the vicinity of the designated future electric vehicle charging locations, protected from vehicles by a wheel stop.

City of Puyallup
Community & Economic Development
ISSUED PERMIT
Building | Planning
Engineering | Public Works
Fire | Parks

MILBRANDT ARCHITECTS

25 Central Way, Suite 210
Kirkland, Washington 98033
P: 425.454.7130 F: 425.658.1208
Web: www.milbrandtarch.com

© Copyright 2023
Milbrandt Architects, INC., P.S.
All rights reserved

11063 REGISTERED ARCHITECT
ANNA P. THOMPSON
STATE OF WASHINGTON

Site Plan

Building H

Bradley Heights Apartments

Puyallup, Wa

Timberlane Partners

Revisions

No.	Date	Description
1	8-30-24	Owner Changes/ Permit Corrections
2	4-24-25	Permit Corrections

PRMU20240279

Initial Publish Date:

Date Plotted: 5-6-25

Job No.: 23-06

Drawn By: APT/HDM

Sheet No.: A2

H:\23063\23063_SITE_PLAN.DWG

CODE REFERENCES ARE TO ICC A117.1-2009 UNLESS NOTED OTHERWISE

NOTE: ALL DIMENSIONS ARE FROM FINISHED SURFACE

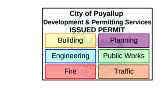

CHANGES IN LEVEL

CHANGES IN LEVEL OF ¼" MAX. SHALL BE PERMITTED TO BE VERTICAL AND WITHOUT EDGE TREATMENT.

CHANGES IN LEVEL BETWEEN ¼" AND ½" MAX. SHALL BE BEVELED WITH A SLOPE NOT STEEPER THAN 1:2

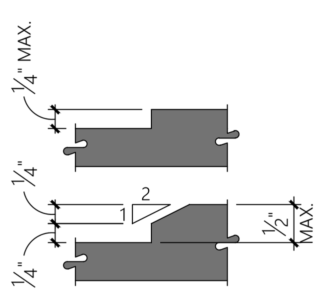

TURNING SPACE & CLEAR FLOOR SPACE

TURNING SPACES SHALL BE EITHER A 60" CIRCLE OR A T-SHAPED SPACE WITHIN A 60" SQUARE.

CLEAR FLOOR SPACE IS DEFINED AS A SPACE 30"x48"

A SLOPE OF NOT MORE THAN 1:48 SHALL BE PERMITTED WITHIN TURNING AND CLEAR FLOOR SPACES. NO CHANGES IN LEVEL ARE PERMITTED.

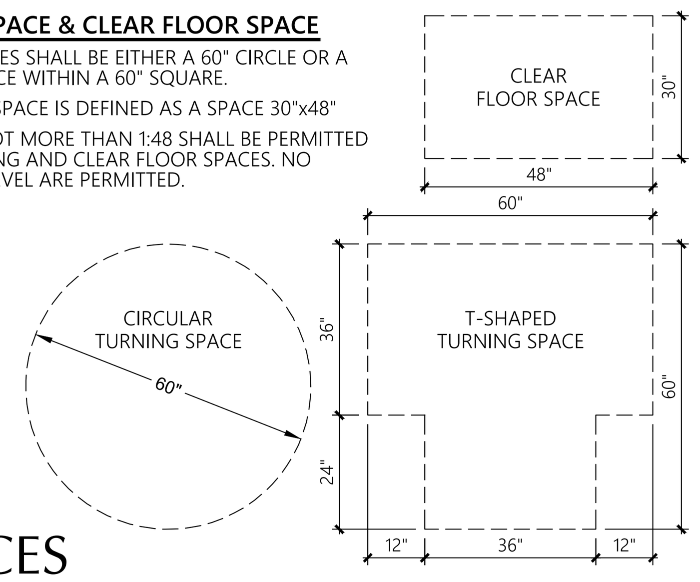

1 FLOOR CLEARANCES

3/8"=1'-0"

KNEE AND TOE CLEARANCE

TOE OR KNEE CLEARANCE SHALL BE 30" WIDE MIN.

THE DIP OF THE OVERFLOW ON A SINK SHALL NOT BE CONSIDERED IN DETERMINING KNEE AND TOE CLEARANCE.

* WATER SUPPLY & DRAINPIPES UNDER LAVATORIES AND SINKS SHALL BE INSULATED OR OTHERWISE CONFIGURED TO PROTECT AGAINST CONTACT. THERE SHALL BE NO SHARP OR ABRASIVE SURFACES UNDER LAVATORIES AND SINKS.

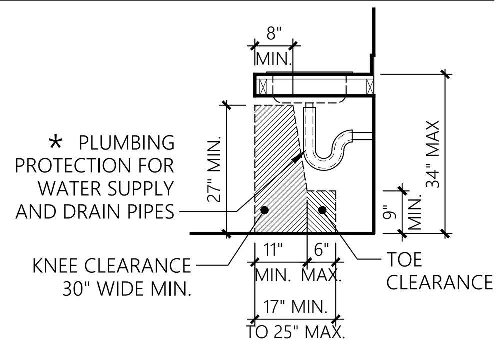

2 KNEE AND TOE SPACE

3/8"=1'-0"

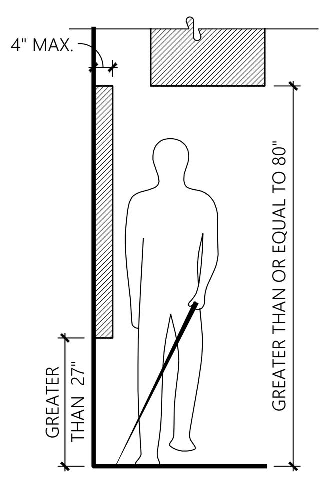

PROTRUDING OBJECTS

OBJECTS WITH LEADING EDGES MORE THAN 27" AND NOT MORE THAN 80" ABOVE THE FINISH FLOOR MAY PROTRUDE 4" MAX INTO THE CIRCULATION PATH. EXCEPT HANDRAILS, WHICH ARE PERMITTED TO PROTRUDE 4½".

WHERE VERTICAL CLEARANCE IS LESS THAN 80", GUARDRAILS OR OTHER BARRIERS SHALL BE PROVIDED WITH THE LEADING EDGE OF THE GUARDRAIL NO MORE THAN 27" MAX. ABOVE THE FLOOR.

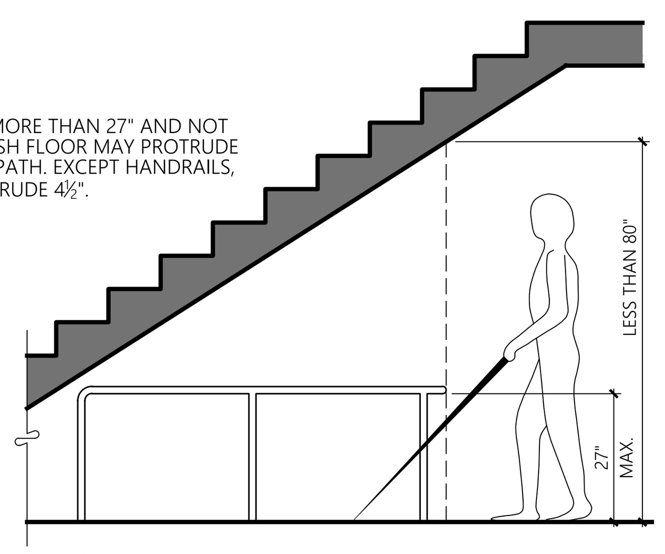

3 PROTRUDING OBJECTS

3/8"=1'-0"

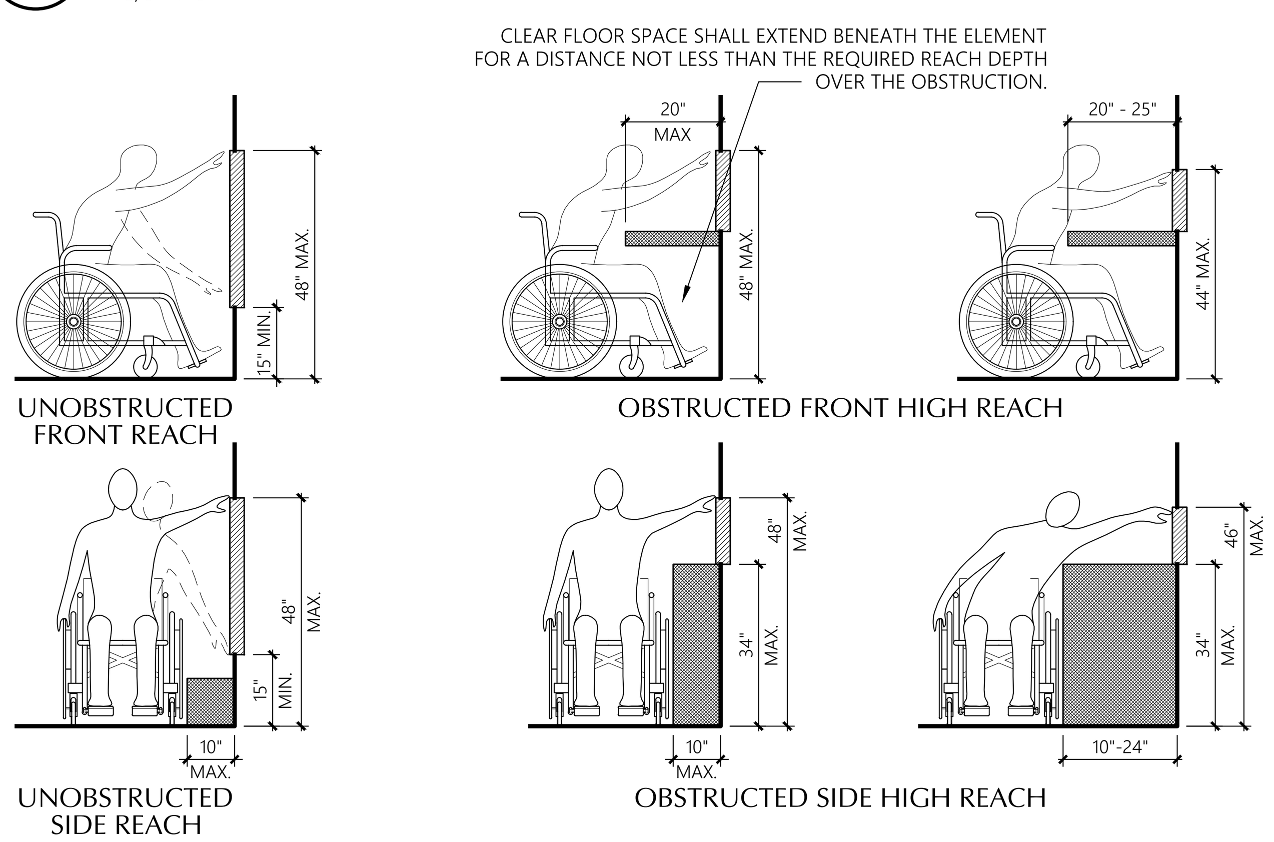

OPERABLE PARTS

A 30"x48" CLEAR FLOOR SPACE SHALL BE PROVIDED AT ALL OPERABLE PARTS. ALL OPERABLE PARTS SHALL BE WITHIN ONE OR MORE OF THE REACH RANGES.

OPERABLE PARTS SHALL BE OPERABLE WITH ONE HAND AND SHALL NOT REQUIRE TIGHT GRASPING, PINCHING, OR TWISTING OF THE WRIST. THE FORCE REQUIRED TO ACTIVATE OPERABLE PARTS SHALL BE 5.0 lbs MAX.

4 REACH RANGES

3/8"=1'-0"

BUILDING BLOCKS
CHAPTER 3

ACCESSIBLE ROUTE (PER IBC SECTION 1104)

AT LEAST ONE ACCESSIBLE ROUTE WITHIN THE SITE SHALL BE PROVIDED FROM PUBLIC TRANSPORTATION STOPS, ACCESSIBLE PARKING, ACCESSIBLE PASSENGER LOADING ZONES, AND PUBLIC STREETS OR SIDEWALKS TO THE ACCESSIBLE BUILDING ENTRANCES SERVED.

WHEN A BUILDING OR PORTION OF A BUILDING IS REQUIRED TO BE ACCESSIBLE, AT LEAST ONE ACCESSIBLE ROUTE SHALL BE PROVIDED TO EACH PORTION OF THE BUILDING, TO ACCESSIBLE BUILDING ENTRANCES CONNECTING ACCESSIBLE WALKWAYS AND TO THE PUBLIC WAY.

ACCESSIBLE ROUTES SHALL COINCIDE WITH OR BE LOCATED IN THE SAME AREAS AS A GENERAL CIRCULATION PATH.

ACCESSIBLE ROUTES SHALL CONSIST OF ONE OR MORE OF THE FOLLOWING COMPONENTS: WALKING SURFACES WITH A SLOPE NOT STEEPER THAN 1 :20, DOORS & DOORWAYS, RAMPS, CURB RAMPS EXCLUDING THE FLARED SIDES, ELEVATORS, AND PLATFORM LIFTS.

WALKING SURFACES

SLOPE: THE RUNNING SLOPE OF WALKING SURFACES SHALL NOT BE STEEPER THAN 1 :20. THE CROSS SLOPE OF A WALKING SURFACE SHALL NOT BE STEEPER THAN 1 :48.

CHANGES IN LEVEL: CHANGES IN LEVEL SHALL COMPLY WITH SECTION 303 **(see detail 1 ACC sheets)**

CLEAR WIDTH: THE WIDTH OF AN ACCESSIBLE ROUTE SHALL BE 36" MIN. THE CLEAR WIDTH SHALL BE PERMITTED TO BE REDUCED TO 32" MIN. FOR A LENGTH OF 24" MAX. PROVIDED THE REDUCED WIDTH SEGMENTS ARE SEPARATED BY SEGMENTS THAT ARE 48" MIN. IN LENGTH AND 36" MIN. IN WIDTH. FOR EXTERIOR ROUTES OF TRAVEL, THE CLEAR WIDTH SHALL BE 44" MIN.

PASSING SPACE: AN ACCESSIBLE ROUTE WITH A CLEAR WIDTH LESS THAN 60" SHALL PROVIDE PASSING SPACES AT MAXIMUM INTERVALS OF 200 FEET. PASSING SPACES SHALL BE EITHER A 60"x60" MIN. SPACE, OR AN INTERSECTION OF WALKING SURFACES WITH A T-SHAPED TURNING SPACE **(See detail 1 ACC sheets)**, PROVIDED THE BASE AND ARMS OF THE T-SHAPED SPACE EXTEND 48" MIN. BEYOND THE INTERSECTION.

5 ACCESSIBLE ROUTE

★ ADDITIONAL CLEARANCE IF DOOR HAS BOTH CLOSER AND LATCH

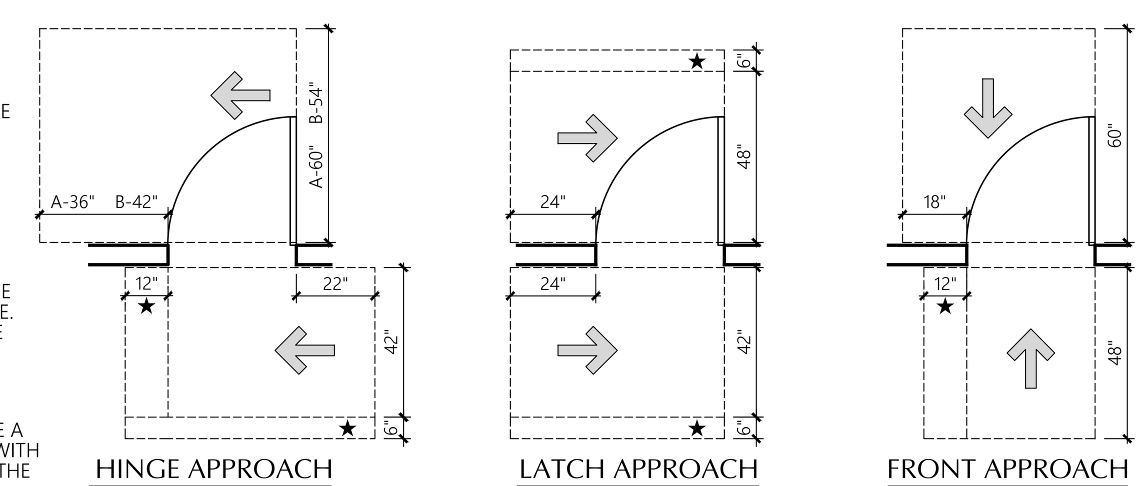

MANEUVERING CLEARANCES

MIN. MANEUVERING CLEARANCES SHALL COMPLY WITH THESE DIAGRAMS AND SHALL NOT INCLUDE KNEE & TOE CLEARANCE. THE FLOOR SURFACE WITHIN THE MANEUVERING CLEARANCE SHALL HAVE A SLOPE NOT GREATER THAN 1:48

DOORS

DOORWAY CLEAR WIDTH: DOOR OPENINGS SHALL PROVIDE A CLEAR WIDTH OF 32" MIN. CLEAR OPENING OF DOORWAYS WITH SWINGING DOORS SHALL BE MEASURED FROM THE FACE OF THE DOOR TO THE STOP WITH THE DOOR OPEN 90°

THRESHOLDS: IF PROVIDED, THRESHOLDS SHALL BE ½" MAX. IN HEIGHT & SHALL COMPLY WITH SECTIONS 302 & 303. **(See detail 1 ACC sheets)**

DOOR HARDWARE: HANDLES, PULLS, LATCHES, LOCKS AND OTHER OPERABLE PARTS ON ACCESSIBLE DOORS SHALL HAVE A SHAPE THAT IS EASY TO GRASP WITH ONE HAND AND DOES NOT REQUIRE TIGHT GRASPING, PINCHING, OR TWISTING OF THE WRIST TO OPERATE. OPERABLE PARTS OF SUCH HARDWARE SHALL BE 34" MIN. AND 48" MAX. ABOVE THE FLOOR

CLOSING SPEED: DOORS WITH CLOSERS SHALL BE ADJUSTED SO THAT FROM A 90° OPEN POSITION, THE TIME REQUIRED TO MOVE THE DOOR TO A POSITION OF 12° FROM THE LATCH IS 5 SECONDS MIN.

DOORS WITH A SPRING HINGE SHALL BE ADJUSTED SO THAT FROM A 70° OPEN POSITION, THE TIME REQUIRED TO MOVE THE DOOR TO A CLOSED POSITION IS 1.5 SECONDS MIN.

DOOR OPENING FORCE: HINGED, SLIDING OR FOLDING DOORS OTHER THAN FIRE DOORS SHALL HAVE AN OPENING FORCE AS FOLLOWS:
INTERIOR DOORS: 5 lbs. MAX.
EXTERIOR DOORS: 10 lbs. MAX.

6 DOORS

1/4"=1'-0"

RAMPS

GENERAL: RAMP RUNS SHALL HAVE A RUNNING SLOPE GREATER THAN 1:20 AND NOT STEEPER THAN 1:12. THE MAX. CROSS SLOPE OF A RAMP SHALL BE 1 :48. THE MAX. RISE FOR ANY RAMP RUN SHALL BE 30". LANDINGS SUBJECT TO WET CONDITIONS SHALL BE DESIGNED TO PREVENT THE ACCUMULATION OF WATER.

CHANGES IN LEVEL: CHANGES IN LEVEL SHALL COMPLY WITH SECTION 303 **(See detail 1 ACC sheets)**

CLEAR WIDTH: THE CLEAR WIDTH SHALL BE 36" MIN. FOR EXTERIOR ROUTES OF TRAVEL THE CLEAR WIDTH SHALL BE 44" MIN. THE HANDRAILS SHALL NOT PROJECT INTO THE REQUIRED CLEAR WIDTH OF THE RAMP RUN.

LANDINGS: RAMPS SHALL HAVE LANDINGS AT THE BOTTOM & TOP OF EACH RAMP RUN WITH A MAX. SLOPE OF 1:48. CLEAR WIDTH OF LANDINGS SHALL BE AS WIDE AS THE WIDEST RAMP RUN LEADING TO THE LANDING AND A MIN. CLEAR LENGTH OF 60". RAMPS THAT CHANGE DIRECTION AT THE LANDING SHALL BE SIZED TO PROVIDE A TURNING SPACE **(See detail 1 ACC sheets)**

HANDRAILS: RAMP RUNS WITH A RISE GREATER THAN 6" SHALL HAVE HANDRAILS

EDGE PROTECTION: THE FLOOR SURFACE OF THE RAMP RUN OR LANDING SHALL EXTEND 12" BEYOND THE INSIDE FACE OF A RAILING OR THERE SHALL BE A 4" MIN. HEIGHT CURB OR A BARRIER AT THE EDGE OF THE RAMP OR LANDING CONSTRUCTED SO THAT IT PREVENTS THE PASSAGE OF A 4" DIAMETER SPHERE

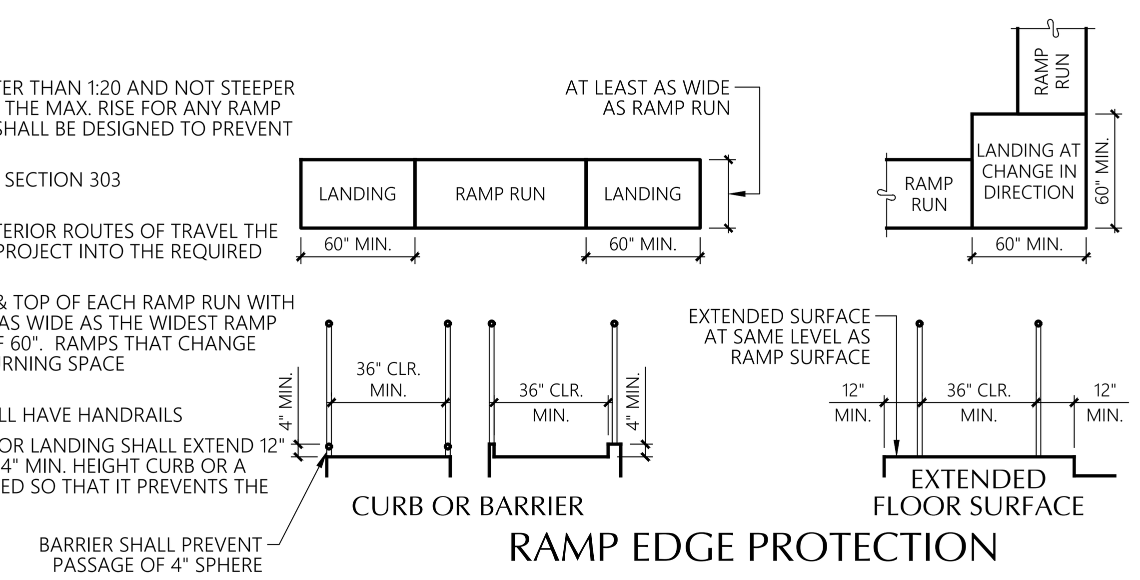

7 RAMPS

1/4"=1'-0"

CURB RAMPS

THE MIN. WIDTH OF CURB RAMPS SHALL BE 36". ALL ADJOINING GUTTERS AND ROAD SURFACES IMMEDIATELY ADJACENT TO THE CURB RAMP SHALL NOT BE STEEPER THAN 1:20. THE CURB RAMP SHALL HAVE A MAX. SLOPE OF 1:12 WITH A MAX. CROSS SLOPE OF 1 :48. LANDINGS SUBJECT TO WET CONDITIONS SHALL BE DESIGNED TO PREVENT THE ACCUMULATION OF WATER.

A 36" MIN. LENGTH LANDING AT LEAST AS WIDE AS THE CURB RAMP SHALL BE PROVIDED AT THE TOP OF CURB RAMPS.

CURB RAMPS SHALL BE LOCATED OR PROTECTED TO PREVENT THEIR OBSTRUCTION BY PARKED VEHICLES.

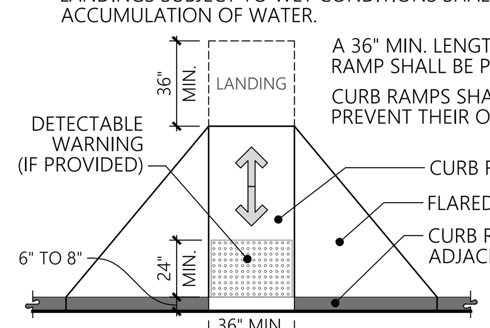

DETECTABLE WARNINGS

DETECTABLE WARNINGS SHALL CONTRAST VISUALLY WITH ADJACENT SURFACES, EITHER LIGHT-ON-DARK OR DARK-ON-LIGHT.

DETECTABLE WARNING SURFACES IN INTERIOR LOCATIONS SHALL DIFFER FROM ADJOINING WALKING SURFACES IN RESILIENCY OR SOUND-ON-CANE CONTACT.

TRUNCATED DOMES SHALL BE ALIGNED IN A SQUARE PATTERN.

CHECK WITH LOCAL JURISDICTION ON WHERE DETECTABLE WARNINGS ARE REQUIRED. CURRENTLY IBC & ANSI A117.1 ONLY REQUIRE DETECTABLE WARNINGS AT LIMITED & SPECIFIC LOCATIONS.

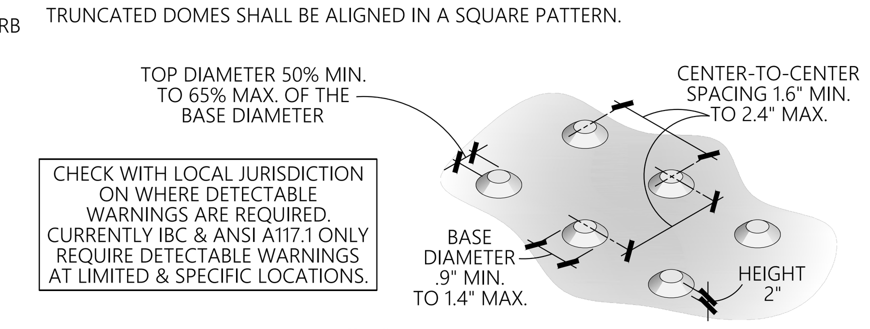

8 CURB RAMPS AND DETECTABLE WARNINGS

1/4"=1'-0"

ACCESSIBLE ROUTES
CHAPTER 4

ACCESSIBLE PARKING SPACES

LOCATION: PER IBC SECTION 1106.6, ACCESSIBLE PARKING SPACES SHALL BE LOCATED ON THE SHORTEST ACCESSIBLE ROUTE OF TRAVEL FROM ADJACENT PARKING TO AN ACCESSIBLE BUILDING ENTRANCE. WHERE PRACTICAL THE ACCESSIBLE ROUTE SHALL NOT CROSS LANES OF TRAFFIC. WHERE CROSSING TRAFFIC LANES IS NECESSARY, THE ROUTE SHALL BE DESIGNATED AND MARKED AS A CROSSWALK.

PARKING STALL SIZE: CAR AND VAN PARKING SPACES SHALL BE 96" MIN. WIDTH. ACCESS AISLES SERVING CAR PARKING SPACES SHALL BE 60" MIN. IN WIDTH. ACCESS AISLES SERVING VAN PARKING SPACES SHALL BE 96" MIN. IN WIDTH.

ACCESS AISLE: CAR AND VAN PARKING SPACES SHALL HAVE AN ADJACENT ACCESS AISLE ON EITHER SIDE OF THE PARKING SPACE. THE ACCESS AISLES SHALL BE 60" MIN. IN WIDTH FOR CAR STALLS AND 96" MIN. IN WIDTH FOR VAN STALLS AND EXTEND THE FULL LENGTH OF AND AT THE SAME LEVEL AS THE PARKING SPACE THEY SERVE. ACCESS AISLES SHALL BE MARKED SO AS TO DISCOURAGE PARKING IN THEM

FLOOR SURFACES: PARKING STALLS & ADJACENT ACCESS AISLES SHALL HAVE A SURFACE SLOPE NOT GREATER THAN 1:48.

VERTICAL CLEARANCE: ACCESSIBLE VAN PARKING STALLS, ACCESS AISLES SERVING THEM, & VEHICULAR ROUTES SERVING THE VAN SPACE SHALL HAVE A VERTICAL CLEARANCE OF 98" MIN.

IDENTIFICATION: ACCESSIBLE PARKING SPACES SHALL BE INDICATED BY A VERTICAL SIGN. SIGNS SHALL INCLUDE THE INTERNATIONAL SYMBOL OF ACCESSIBILITY THAT IS WHITE WITH A BLUE BACKGROUND. SIGNS IDENTIFYING VAN PARKING SPACES SHALL CONTAIN THE DESIGNATION "VAN ACCESSIBLE". A VERTICAL "NO PARKING" SIGN SHALL BE ERECTED AT THE HEAD OF EACH ACCESS AISLE LOCATED ADJACENT TO AN ACCESSIBLE PARKING SPACE. THESE SIGNS MAY INCLUDE ADDITIONAL LANGUAGE SUCH AS, BUT NOT LIMITED TO, AN INDICATION OF THE AMOUNT OF THE MONETARY PENALTY FOR PARKING IN THE SPACE WITHOUT A VALID PERMIT OR THE ACCESS AISLE. THESE SIGNS SHALL BE 60" MIN. ABOVE THE FLOOR OF THE PARKING SPACE MEASURED TO THE BOTTOM OF THE SIGN.

SIGN MOUNTING: SIGNS ARE TO BE MOUNTED COMPLETELY OUTSIDE OF CIRCULATION PATHS WHEREVER POSSIBLE. WHERE MOUNTING IS NECESSARY WITHIN A PATH OF CIRCULATION, SIGNS SHALL MEET THE REQUIREMENTS OF **IBC SECTION 1003.3** FOR PROTRUDING OBJECTS AND POST-MOUNTED OBJECTS.

* SIGNS MOUNTED ON POSTS WITHIN A CIRCULATION PATH SHALL BE INSTALLED WITH A VERTICAL CLEARANCE OF 80" MIN. FROM THE LOWEST POINT OF THE SIGN(S) TO THE WALKING SURFACE. IF A POST MOUNTED SIGN IS SIZED SUCH THAT IT PROTRUDES 4" MAX. FROM THE MOUNTING POST, THEN THE MOUNTING HEIGHT SHALL BE MOUNTED AT 60" MIN. ABOVE THE PARKING SURFACE SO AS TO NOT BE OBSTRUCTED BY ANY PARKED VEHICLES.

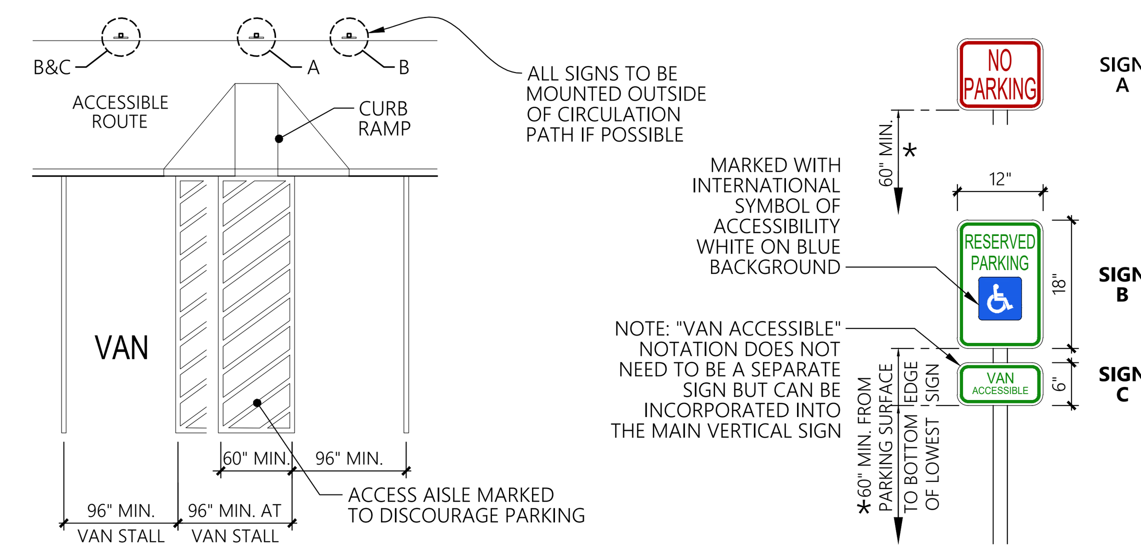

10 ACCESSIBLE PARKING SPACES

NTS

ACCESSIBLE STAIR REQUIREMENTS

ALL STEPS ON A FLIGHT OF STAIRS SHALL HAVE UNIFORM RISER HEIGHTS AND UNIFORM TREAD DEPTHS. RISERS SHALL BE 4" HIGH MIN. AND 7" HIGH MAX. TREADS SHALL BE 11" DEEP MIN.

OPEN RISERS ARE NOT PERMITTED & TREADS SHALL HAVE A SLOPE NOT MORE THAN 1:48.

STAIR NOSINGS SHALL CONFORM TO THE DIAGRAMS SHOWN HERE AND THE LEADING 2" OF THE TREAD SHALL HAVE VISUAL CONTRAST OF DARK-ON-LIGHT OR LIGHT-ON-DARK FROM THE REMAINDER OF THE TREAD.

STAIR TREADS & LANDINGS SUBJECT TO WET CONDITIONS SHALL BE DESIGNED TO PREVENT ACCUMULATION OF WATER.

FLOOR IDENTIFICATION SIGNS SHALL BE LOCATED AT EACH FLOOR LANDING ADJACENT TO THE STAIRWELL DOOR LEADING INTO THE CORRIDOR. SIGNS SHALL BE IN RAISED CHARACTERS & BRAILLE. "EXIT" SIGNS SHALL BE LOCATED AT STAIRS LEADING TO THE EXTERIOR OF THE BUILDING. (See detail 21 ACC sheets)

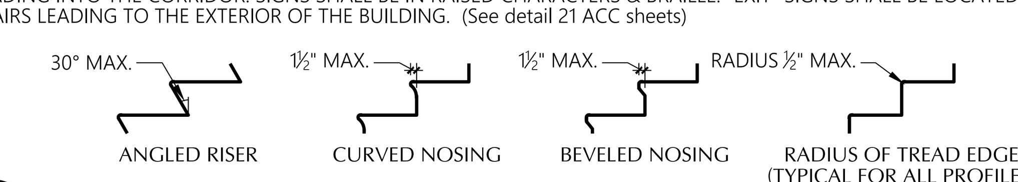

11 ACCESSIBLE STAIRS

3/8"=1'-0"

HANDRAILS

HANDRAILS SHALL BE PROVIDED ON BOTH SIDES OF STAIRS & RAMPS. THEY SHALL BE CONTINUOUS FOR THE FULL LENGTH OF EACH STAIR FLIGHT OR RAMP RUN. INSIDE HANDRAILS ON SWITCHBACKS SHALL BE CONTINUOUS BETWEEN FLIGHTS OR RUNS.

HANDRAIL GRIPPING SURFACES & ANY SURFACES ADJACENT TO THEM SHALL BE FREE OF SHARP OR ABRASIVE ELEMENTS & SHALL HAVE ROUNDED EDGES. THEY SHALL BE CONTINUOUS ALONG THEIR LENGTH AND SHALL NOT BE OBSTRUCTED ALONG THEIR TOPS OR SIDES. THE BOTTOM SHALL NOT BE OBSTRUCTED FOR MORE THAN 20% OF IT'S LENGTH

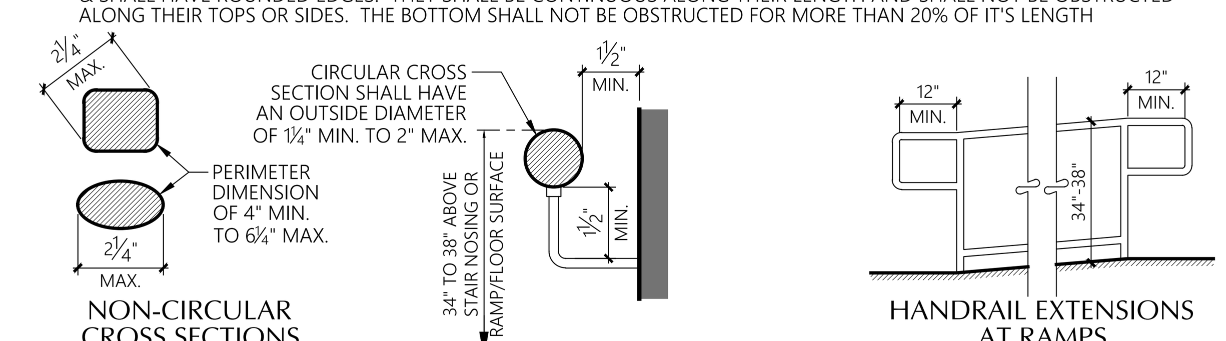

HANDRAIL EXTENSIONS

EXTENSIONS SHALL EXTEND BEYOND AND IN THE SAME DIRECTION OF A STAIR FLIGHT OR RAMP RUN EXCEPT FOR THE INSIDE CONTINUOUS HANDRAIL AT SWITCHBACK STAIRS OR RAMPS. HANDRAILS SHALL RETURN TO A WALL, GUARD OR THE LANDING SURFACE, OR BE CONTINUOUS TO THE HANDRAIL OF AN ADJACENT STAIR FLIGHT OR RAMP RUN.

AT THE BOTTOM OF A STAIR FLIGHT THE HANDRAIL SHALL EXTEND AT THE SLOPE OF THE STAIR FLIGHT FOR A HORIZONTAL DISTANCE EQUAL TO ONE TREAD DEPTH BEYOND THE BOTTOM TREAD NOSING.

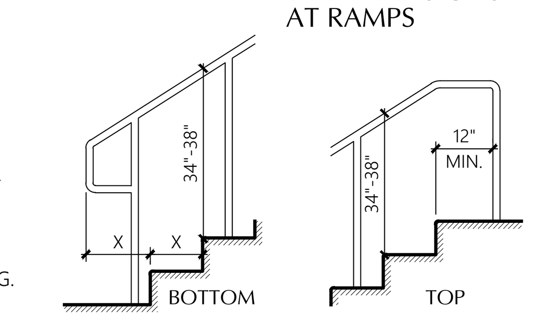

12 HANDRAILS

1 1/2" = 1'-0" AND 3/8"=1'-0"

GENERAL SITE & BLDG. ELEMENTS
CHAPTER 5

MILBRANDT ARCHITECTS

25 Central Way, Suite 210
Kirkland, Washington 98033
P: 425.454.7130 F: 425.658.1208
Web: www.milbrandtarch.com

© Copyright 2023
Milbrandt Architects, INC., P.S.
All rights reserved

Site Standards

Bradley Heights Apartments

Puyallup, Wa

Timberlane Partners

Revisions

No.	Date	Description

PRMU20240279

Initial Publish Date:

Date Plotted: 5-1-25

Job No.: 23-06

Drawn By: APT/DJV/JLL

Sheet No.: **A3**

H:\2306\SITE STANDARDS & TRASH ENCLOSURE.DWG

LEGEND

= Portion of perimeter with 30 feet of open space

FRONTAGE INCREASE TO BUILDING AREA

Per IBC Section 506.3 buildings that adjoin or have access to a public way or qualifying green space for more than 25% of their total perimeter are eligible for an area factor increase based on frontage.
To qualify for an area factor increase based on frontage, the public way or open space adjacent to the building perimeter shall have a minimum distance (W) of 20 feet, and only the first 30 feet shall be considered in the calculation. The measurement shall be to the nearest lot line, the entire width of a street, alley or public way, or the exterior face of an adjacent building on the same property.
For purposes of simplifying this calculation only those portions of perimeter fronting right of way or green space with a dimension of 30 feet or more are considered. Those portions of perimeter that front areas that may qualify (are more than 20 feet, but are less than 30 feet) are not included in the frontage calculation.

Frontage Area increase calculation:

$I_f = [F/P-0.25]W/30$

I_f = area of increase due to frontage
F = Building perimeter that fronts on a public way or open space
P = Full building perimeter
W = Width of public way or open space (max of 30')

For Building H
F = 374.45'
P = 416.26'
W = 30'

I_f = [374.45'/416.26'-0.25]30'/30' = **0.65 factor of increase due to frontage**

ALLOWABLE BUILDING AREA

Per IBC Table 506.2: Buildings of R-2 occupancy with VB construction type are allowed to have an area of 7,000 square feet per floor. With the area factor increase from above this allowable area per floor is increased as follows:
7,000 s.f. + (7,000 s.f. X 0.65) = **11,546 square feet per floor allowed**

Proposed floor area for Building H
Floor 1: 8,400 s.f.
Floor 2: 8,040 s.f.
Floor 3: 8,296 s.f.

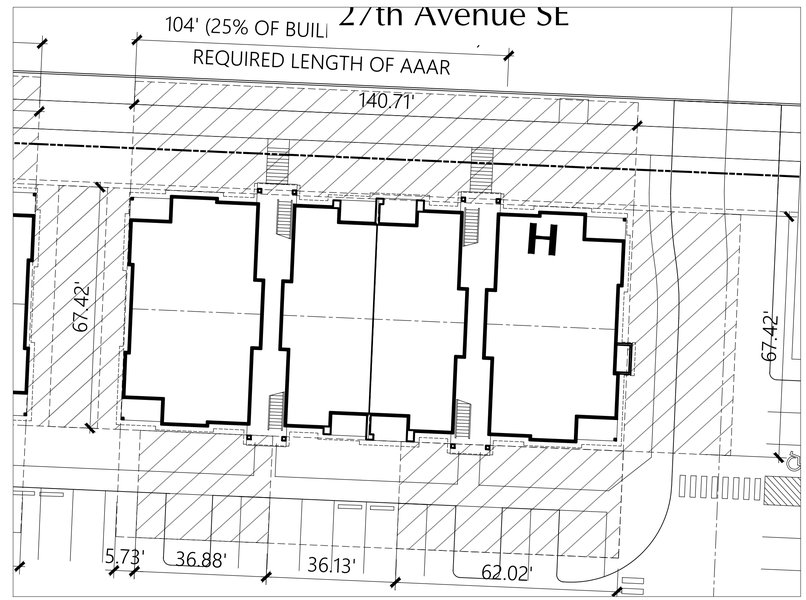

BUILDING H AREA INCREASE DIAGRAM
1" = 20'

MILBRANDT ARCHITECTS
25 Central Way, Suite 210
Kirkland, Washington 98033
P: 425.454.7130 F: 425.658.1208
Web: www.milbrandtarch.com

© Copyright 2023
Milbrandt Architects, INC., P.S.
All rights reserved

11063 REGISTERED ARCHITECT
ANNA P. THOMPSON
STATE OF WASHINGTON

Area Increase Diagram
Building H

Bradley Heights Apartments
Puyallup, Wa

Timberlane Partners

Revisions

No.	Date	Description

PRMU20240279

Initial Publish Date:
Date Plotted: 5-6-25
Job No.: 23-06
Drawn By: TMK
Sheet No.: A4

H:\2306\AREA INCREASE DIAGRAMS.DWG

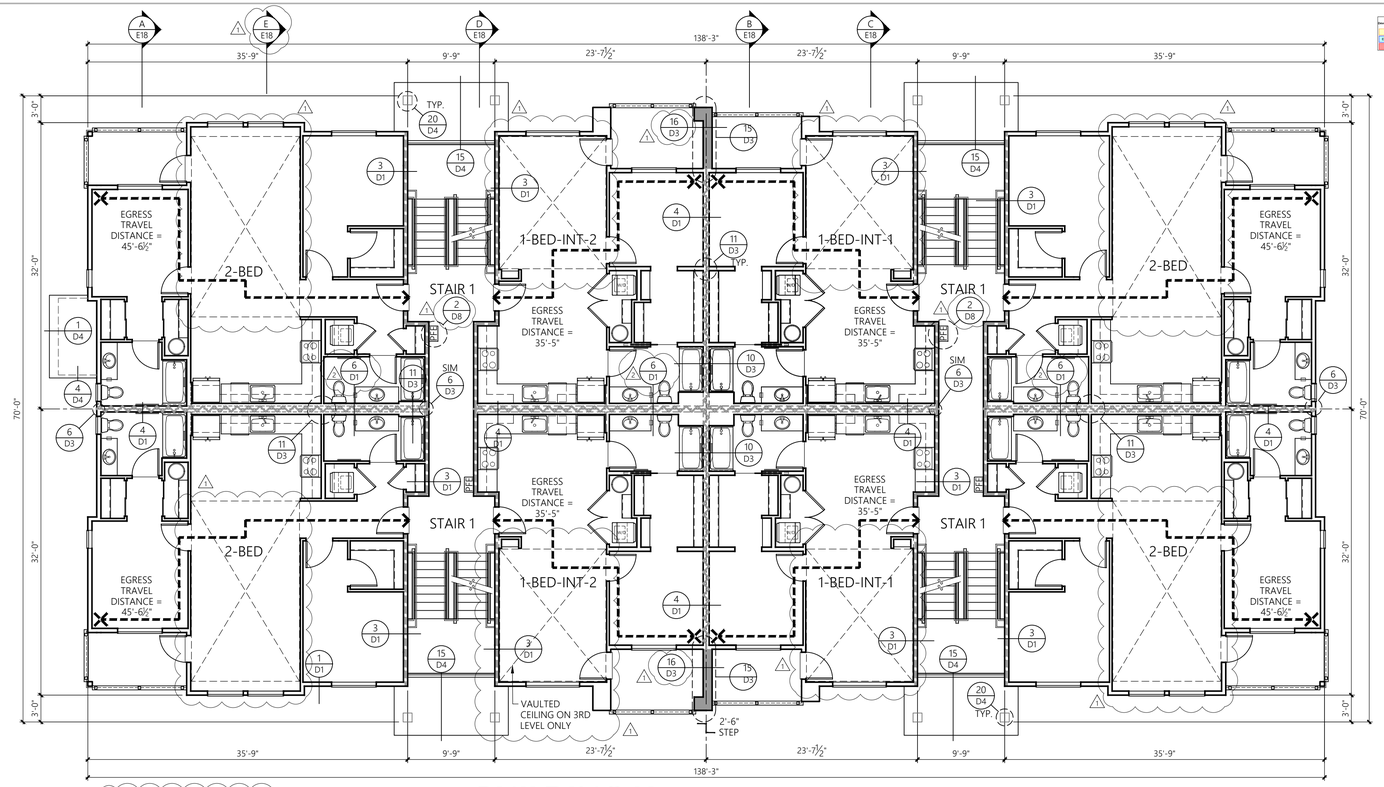

ADDED EGRESS TRAVEL DISTANCE

BUILDING H — 2nd & 3rd LEVEL PLAN

1/8" = 1'-0"

3-STORY, 24-UNIT BUILDING

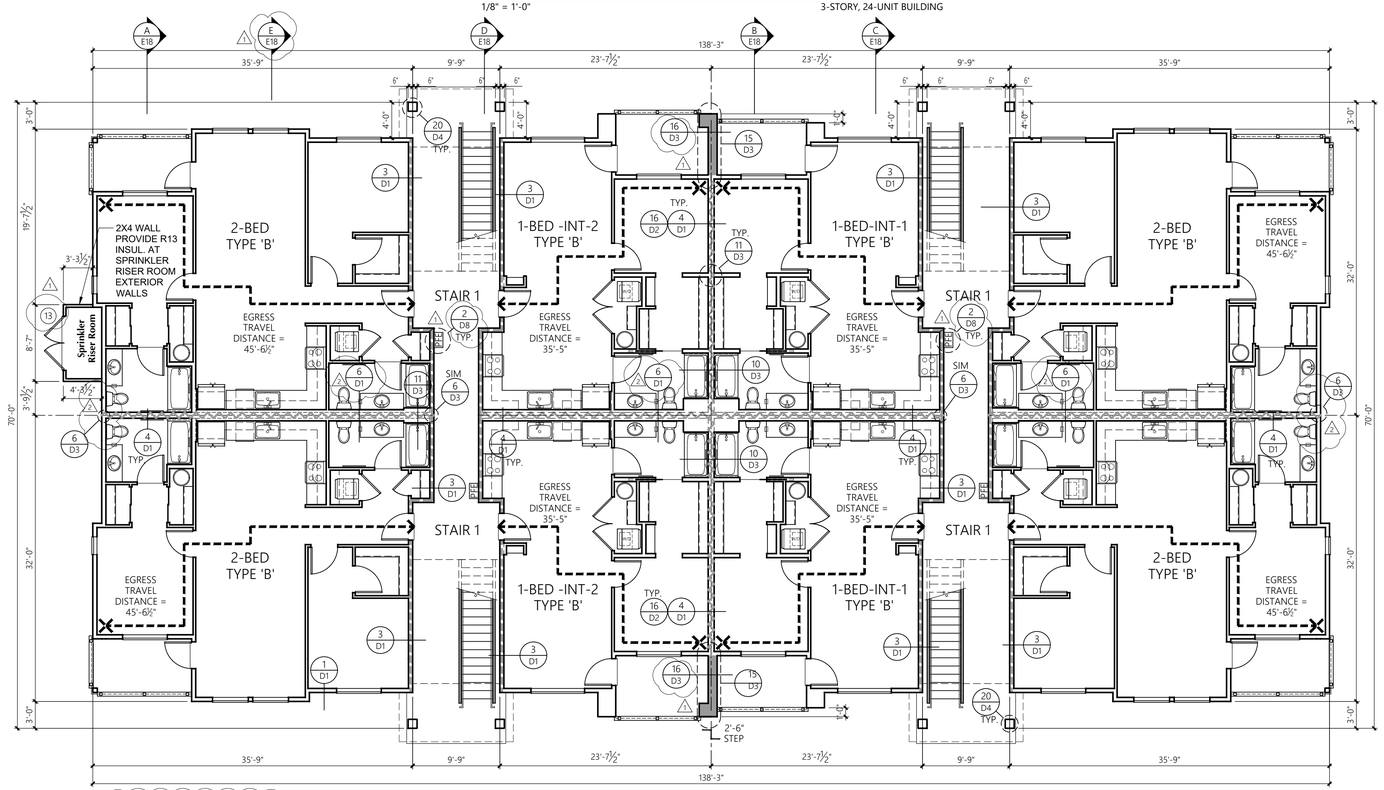

ADDED EGRESS TRAVEL DISTANCE

BUILDING H — 1st LEVEL PLAN

1/8" = 1'-0"

3-STORY, 24-UNIT BUILDING

LEGEND

- EXTENT OF 1-HR FIRE PARTITION
  1-HR FIRE PARTITION SEPARATES THE INTERIOR SPACES BETWEEN UNITS IN THE SAME BUILDINGS. IT'S EXTENT ENDS WHERE ONE SIDE WOULD BE AN EXTERIOR FACE. SEE 4/D1
- PLUMBING PENETRATIONS IN 1-HR FIRE PARTITION SHALL BE PROTECTED BY AN APPROVED FIRESTOP SYSTEM PER SHEET D9 OR AN EQUIVALENT ALTERNATIVE.
- EXTENT OF 1-HR FIRE BARRIER AROUND EXIT STAIRS/CORRIDOR, SEE 3/D1
- EXTENT OF 1-HR EXTERIOR WALL, SEE LOCATION SPECIFIC DETAIL
- FE* - SEMI RECESSED FIRE EXTINGUISHER CABINET/SEE DETAIL 2/D7
- (X) DOOR TAG, SEE SHEET U14

FIRESTOPPING IS REQUIRED AT RATED ASSEMBLY PENETRATIONS. SEE DETAIL 17/D8 FOR LOCATIONS. SEE SHEET D9 FOR FIRESTOPPING DETAILS.

P:\2306\BUILDING H.DWG

MILBRANDT ARCHITECTS

25 Central Way, Suite 210
Kirkland, Washington 98033
P: 425.454.7130 F: 425.658.1208
Web: www.milbrandtarch.com

© Copyright 2023
Milbrandt Architects, INC., P.S.
All rights reserved

11063 REGISTERED ARCHITECT
ANNA P. THOMPSON
STATE OF WASHINGTON

Building H

Building Floor Plans

Bradley Heights Apartments

Puyallup, Wa

Timberlane Partners

Revisions

No.	Date	Description
1	8-30-24	Owner Changes/ Permit Corrections
2	4-24-25	Permit Corrections

PRMU20240279

Initial Publish Date:

Date Plotted: 5-6-25

Job No.: 23-06

Drawn By: APT/HDM/TMK

Sheet No.: **B12**

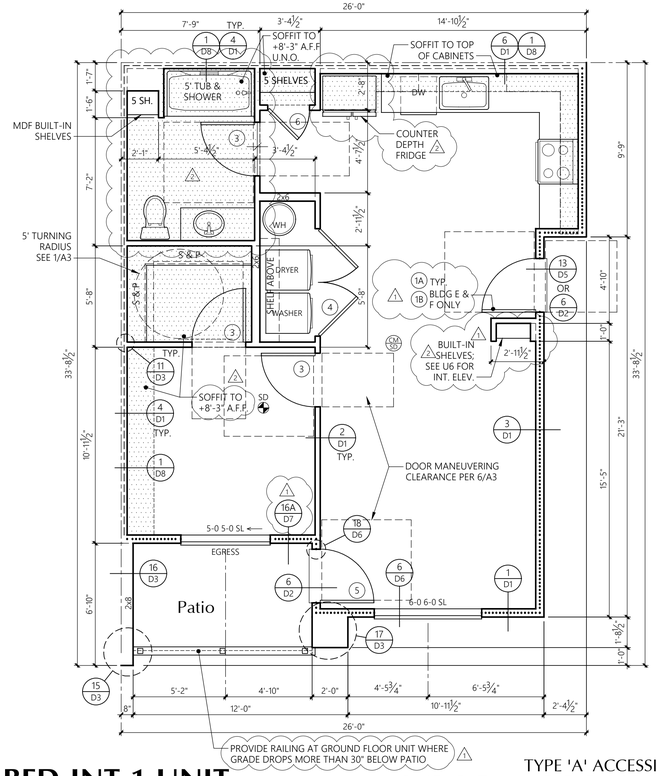

1-BED-INT-1 UNIT

1/4" = 1'-0"

TYPE 'A' ACCESSIBLE
BASEMENT & 1st LEVEL FLOOR PLAN

AREA SUMMARY		
	Heated SF	Patio/Deck SF
Total SF	684	61

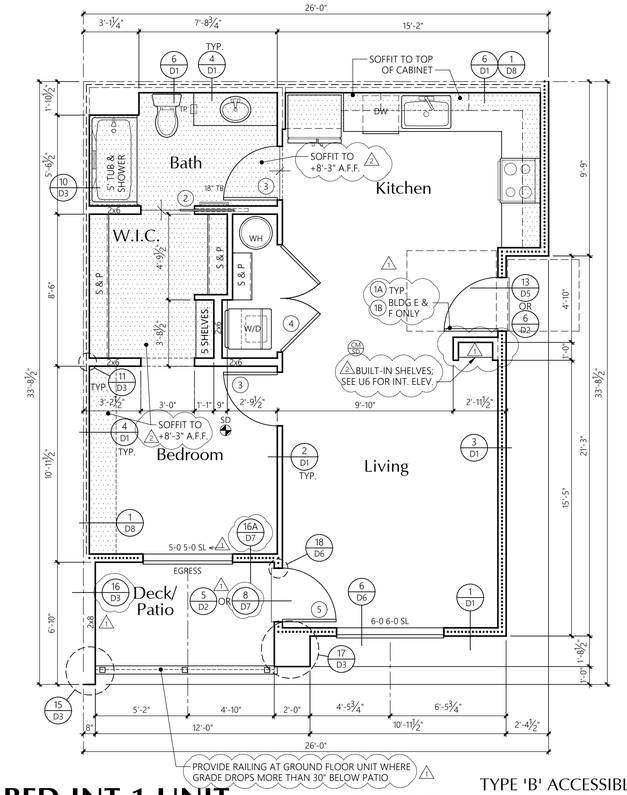

1-BED-INT-1 UNIT

1/4" = 1'-0"

TYPE 'B' ACCESSIBLE
BASEMENT & 1st LEVEL FLOOR PLAN

AREA SUMMARY		
	Heated SF	Patio/Deck SF
Total SF	684	61

UNIT PLAN NOTES

FRAMING: 2x6'S AT EXTERIOR WALLS
2x4'S AT INTERIOR WALLS
UNLESS NOTED OTHERWISE.

R-21 BATT INSULATION U.N.O.

R-13 BATT INSULATION
3½" ACOUSTICAL INSULATION BOTH SIDES OF PARTYWALL, U.N.O.

LOCATION OF SOFFIT FOR VENT RUNS. SOFFIT HEIGHT +8'-0" A.F.F. U.N.O. ON PLANS; SEE DETAIL 1/D8

SD SMOKE DETECTOR

CO CARBON MONOXIDE/SMOKE DETECTOR

CONCEALED SPACES SHALL BE FIRESTOPPED IN BOTH DIRECTIONS AT 10'-0" ON CENTER AND AT FLOORS. TYPICAL.

ALL ESCAPE OR RESCUE WINDOWS FROM SLEEPING ROOMS SHALL HAVE A MINIMUM NET CLEAR OPENING OF 5.7 SQUARE FEET. THE MINIMUM CLEAR OPENING HEIGHT DIMENSION SHALL BE 24". MINIMUM CLEAR OPENING WIDTH DIMENSION SHALL BE 20". EMERGENCY ESCAPE AND RESCUE OPENINGS SHALL HAVE THE BOTTOM OF CLEAR OPENING NOT GREATER THAN 44 INCHES MEASURED FROM THE FLOOR.

WHERE THE OPENING OF THE SILL PORTION OF AN OPERABLE WINDOW IS LOCATED MORE THAN 72 INCHES ABOVE THE FINISHED GRADE OR OTHER SURFACE BELOW, THE LOWEST PART OF THE CLEAR OPENING OF THE WINDOW SHALL BE AT A HEIGHT NOT LESS THAN 36 INCHES ABOVE THE FINISHED FLOOR SURFACE OF THE ROOM IN WHICH THE WINDOW IS LOCATED. OPERABLE SECTIONS OF WINDOWS SHALL NOT PERMIT OPENINGS THAT ALLOW PASSAGE OF A 4 INCH DIAMETER SPHERE WHERE SUCH OPENINGS ARE LOCATED WITHIN 36 INCHES OF THE FINISHED FLOOR.

ALL GLAZING SHALL CONFORM TO THE 2018 IBC, CHAPTER 24, SEC. 2406, SAFETY GLAZING. GLAZING IN ALL DOORS SHALL BE SAFETY TYPE AND ALL GLAZING WITHIN A 24" ARC OF EITHER VERTICAL EDGE SHALL BE SAFETY TYPE.

PROVIDE ⅝" TYPE 'X' (MIN.) GYPSUM SHEATHING ON WALLS BEHIND TUB/SHOWERS TO SATISFY FIRE REQUIREMENTS AT PARTYWALL CONDITION. PROVIDE ¾" PLYWOOD UNDER TUB IN PLACE OF THE GYPCRETE, SEE DETAIL 14/D1

PROVIDE WATER RESISTANT GYPSUM WALLBOARD BEHIND TUB AND SHOWER ENCLOSURE MATERIALS TO A HEIGHT OF 70" MINIMUM ABOVE THE DRAIN INLET.

ALL BEDROOM AND BATHROOM DOORS SHALL BE UNDERCUT A MINIMUM OF 1/2" ABOVE THE ADJACENT FLOOR COVERING.

THE FRONT DOOR SHALL BE OPENABLE FROM THE INSIDE WITHOUT THE USE OF A KEY OR ANY SPECIAL KNOWLEDGE OR EFFORT. IT MAY BE PROVIDED WITH A NIGHT LATCH, DEAD BOLT OR SECURITY CHAIN, PROVIDED SUCH DEVICES ARE OPENABLE FROM THE INSIDE WITHOUT THE USE OF A KEY OR TOOL, AND MOUNTED NOT TO EXCEED 48" ABOVE THE FINISHED FLOOR.

GYPSUM WALLBOARD SCHEDULE
EXCEPT WHERE NOTED OTHERWISE, ⅝" TYPE 'X' GYPSUM WALLBOARD SHALL BE USED THROUGHOUT; ON INTERIOR NON-RATED WALLS, EXTERIOR WALLS, CORRIDOR WALLS, AND 1-HOUR AND 2-HOUR FIRE-RATED WALLS.

STANDARD PLATE
HEIGHT: 9'-1"

SEE ELEVATION SHEETS FOR FLOOR TO FLOOR HEIGHTS

WINDOW HDR IS 8'-0"
UNLESS NOTED OTHERWISE

SEE SHEET U6 FOR INTERIOR ELEVATIONS

DOOR KEY:

(X) DOOR TAG. SEE SHEET U14 FOR SCHEDULE

WINDOW KEY:

TYPE:
FIX = FIXED/PICTURE
SL = SLIDER
SH = SINGLE HUNG
SGD = SLIDING GLASS DOOR

INSULATION

FOUNDATION PERIMETER - R-10 RIGID INSULATION TO A DEPTH OF 24" OR TO TOP OF FOOTING AT HEATED PERIMETER

EXTERIOR WALLS: FIBERGLASS BATTS OR BLANKETS 2x6 WALLS - R21

FLOORS OVER UNHEATED SPACES - R30

ATTICS AND ROOF ASSEMBLIES - R-49
FULL HEIGHT OF UNCOMPRESSED INSULATION EXTENDS OVER THE WALL TOP PLATE AT THE EAVES

EXTERIOR DOORS: MAIN ENTRY U=0.20
ALL OTHERS U=0.40

WINDOWS: MILGARD VINYL

TYPE (VINYL)	MODEL	U-VALUE
SLIDING	6110 ARGON/LoE	0.24 or BETTER
FIXED	6310 ARGON/LoE	0.24 or BETTER
SINGLE HUNG	6210 ARGON/LoE	0.24 or BETTER
DBL. SLIDER	8125 ARGON/LoE	0.24 or BETTER
SGD	6610 ARGON/LoE	0.24 or BETTER

NOTE: ALL CONCEALED OR EXPOSED INSULATION SHALL HAVE A FLAME SPREAD INDEX OF NOT MORE THAN 25 AND A SMOKE-DEVELOPED INDEX OF NOT MORE THAN 450

ACCESSIBILITY NOTES:

ALL GROUND FLOOR UNITS IN THIS PROJECT MUST MEET THE ACCESSIBILITY REQUIREMENTS OF 'TYPE B' ACCESSIBLE UNITS AS REQUIRED BY CHAPTER 11 OF THE 2018 IBC.

INCLUDED IN THE ABOVE GROUND FLOOR UNITS 5% OF ALL UNITS NEED TO MEET THE ACCESSIBILITY REQUIREMENTS OF 'TYPE A' ACCESSIBLE UNITS AS REQUIRED BY CHAPTER 11 OF THE 2018 IBC. SEE BUILDING PLANS FOR LOCATION OF 'TYPE A' UNITS

SEE SHEET U11 & U11.1 FOR SPECIFIC ADAPTABILITY STANDARD FOR BOTH 'TYPE A' AND 'TYPE B' ACCESSIBLE UNITS. SEE INTERIOR ELEVATION SHEETS FOR ADDITIONAL ACCESSIBILITY REQUIREMENTS.

LIGHTING CONTROLS, ELECTRICAL SWITCHES, ENVIRONMENTAL CONTROLS, OPERATING HARDWARE FOR DOORS AND WINDOWS, AND PLUMBING FIXTURE CONTROLS SHALL BE OPERABLE WITH ONE HAND AND SHALL NOT REQUIRE TIGHT GRASPING, PINCHING OR TWISTING OF THE WRIST TO OPERATE. EXCEPT FOR OPERABLE DOOR HARDWARE, SUCH ITEMS SHALL BE 15" MINIMUM AND 44" MAXIMUM ABOVE THE FLOOR (48" FOR WINDOWS).

OPERABLE ENTRY DOOR HARDWARE SHALL BE 34" MINIMUM AND 48" MAXIMUM ABOVE THE FLOOR.

OPENING FORCES FOR ENTRY DOOR SHALL BE:
15 POUNDS TO RELEASE THE LATCH
30 POUNDS TO SET DOOR IN MOTION
15 POUNDS TO OPEN DOOR TO FULL 90°
FORCE MEASURED AT LATCH SIDE OF DOOR.

THE DOOR CLOSER ON THE ENTRY DOOR SHALL BE ADJUSTED TO CLOSE FROM AN OPEN POSITION OF 90° TO AN OPEN POSITION OF 12° IN NOT LESS THAN 5 SECONDS.

OPENING FORCE OF ALL SWINGING INTERIOR DOORS AND THE SLIDING GLASS DOOR SHALL NOT EXCEED 5 POUNDS APPLIED TO THE LATCH SIDE OF THE DOOR.

THE FORCE REQUIRED TO ACTIVATE ALL OTHER OPERABLE ITEMS LISTED ABOVE SHALL BE 5 POUNDS.

*BIFOLD DOOR HARDWARE AT LAUNDRY TO BE 'FULL ACCESS HARDWARE'.

THE 30"x48" CLEAR FLOOR SPACE IS REQUIRED AT EACH FIXTURE OR LOCATION SHOWN ON THE FLOOR PLAN.

30X48

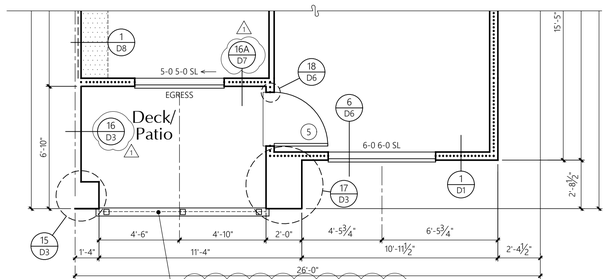

1-BED-INT-2 UNIT

1/4" = 1'-0"

TYPE 'A' & 'B' ACCESSIBLE
BASEMENT & 1st LEVEL FLOOR PLAN

* SEE 1-BED-INT-1 UNIT TYPE 'A' OR 1-BED-1-INT TYPE 'B' FOR REMAINDER OF UNIT

AREA SUMMARY		
	Heated SF	Patio/Deck SF
Total SF	684	71

MILBRANDT ARCHITECTS

25 Central Way, Suite 210
Kirkland, Washington 98033
P: 425.454.7130 F: 425.658.1208
Web: www.milbrandtarch.com

© Copyright 2023
Milbrandt Architects, INC., P.S.
All rights reserved

11063 REGISTERED ARCHITECT
ANNA P. THOMPSON
STATE OF WASHINGTON

1-Bed-Int Unit

Basement & 1st Level Floor Plans

Bradley Heights Apartments

Puyallup, Wa

Timberlane Partners

Revisions

No.	Date	Description
1	8-30-24	Owner Changes/ Permit Corrections

PRMU20240279

Initial Publish Date:

Date Plotted: 5-1-25

Job No.: 23-06

Drawn By: APT/HDM/TMK

Sheet No.: U1

H:\2306\1_BED_INT_UNIT.DWG

UNIT PLAN NOTES

FRAMING: 2x6'S AT EXTERIOR WALLS
2x4'S AT INTERIOR WALLS
UNLESS NOTED OTHERWISE.

R-21 BATT INSULATION U.N.O.

R-13 BATT INSULATION
3½" ACOUSTICAL INSULATION BOTH SIDES OF PARTYWALL, U.N.O.

LOCATION OF SOFFIT FOR VENT RUNS. SOFFIT HEIGHT +8'-0" A.F.F. U.N.O. ON PLANS; SEE DETAIL 1/D8

SD SMOKE DETECTOR

CM CARBON MONOXIDE/SMOKE DETECTOR

CONCEALED SPACES SHALL BE FIRESTOPPED IN BOTH DIRECTIONS AT 10'-0" ON CENTER AND AT FLOORS. TYPICAL.

ALL ESCAPE OR RESCUE WINDOWS FROM SLEEPING ROOMS SHALL HAVE A MINIMUM NET CLEAR OPENING OF 5.7 SQUARE FEET. THE MINIMUM CLEAR OPENING HEIGHT DIMENSION SHALL BE 24". MINIMUM CLEAR OPENING WIDTH DIMENSION SHALL BE 20". EMERGENCY ESCAPE AND RESCUE OPENINGS SHALL HAVE THE BOTTOM OF CLEAR OPENING NOT GREATER THAN 44 INCHES MEASURED FROM THE FLOOR.

WHERE THE OPENING OF THE SILL PORTION OF AN OPERABLE WINDOW IS LOCATED MORE THAN 72 INCHES ABOVE THE FINISHED GRADE OR OTHER SURFACE BELOW, THE LOWEST PART OF THE CLEAR OPENING OF THE WINDOW SHALL BE AT A HEIGHT NOT LESS THAN 36 INCHES ABOVE THE FINISHED FLOOR SURFACE OF THE ROOM IN WHICH THE WINDOW IS LOCATED. OPERABLE SECTIONS OF WINDOWS SHALL NOT PERMIT OPENINGS THAT ALLOW PASSAGE OF A 4 INCH DIAMETER SPHERE WHERE SUCH OPENINGS ARE LOCATED WITHIN 36 INCHES OF THE FINISHED FLOOR.

ALL GLAZING SHALL CONFORM TO THE 2018 IBC, CHAPTER 24, SEC. 2406, SAFETY GLAZING. GLAZING IN ALL DOORS SHALL BE SAFETY TYPE AND ALL GLAZING WITHIN A 24" ARC OF EITHER VERTICAL EDGE SHALL BE SAFETY TYPE.

PROVIDE ⅝" TYPE 'X' (MIN.) GYPSUM SHEATHING ON WALLS BEHIND TUB/SHOWERS TO SATISFY FIRE REQUIREMENTS AT PARTYWALL CONDITION. PROVIDE ½" PLYWOOD UNDER TUB IN PLACE OF THE GYPCRETE, SEE DETAIL 14/D1

PROVIDE WATER RESISTANT GYPSUM WALLBOARD BEHIND TUB AND SHOWER ENCLOSURE MATERIALS TO A HEIGHT OF 70" MINIMUM ABOVE THE DRAIN INLET.

ALL BEDROOM AND BATHROOM DOORS SHALL BE UNDERCUT A MINIMUM OF 1/2" ABOVE THE ADJACENT FLOOR COVERING.

THE FRONT DOOR SHALL BE OPENABLE FROM THE INSIDE WITHOUT THE USE OF A KEY OR ANY SPECIAL KNOWLEDGE OR EFFORT. IT MAY BE PROVIDED WITH A NIGHT LATCH, DEAD BOLT OR SECURITY CHAIN, PROVIDED SUCH DEVICES ARE OPENABLE FROM THE INSIDE WITHOUT THE USE OF A KEY OR TOOL, AND MOUNTED NOT TO EXCEED 48" ABOVE THE FINISHED FLOOR.

INSULATION

FOUNDATION PERIMETER - R-10 RIGID INSULATION TO A DEPTH OF 24" OR TO TOP OF FOOTING AT HEATED PERIMETER

EXTERIOR WALLS: FIBERGLASS BATTS OR BLANKETS 2x6 WALLS - R21

FLOORS OVER UNHEATED SPACES - R30

ATTICS AND ROOF ASSEMBLIES - R-49 FULL HEIGHT OF UNCOMPRESSED INSULATION EXTENDS OVER THE WALL TOP PLATE AT THE EAVES

EXTERIOR DOORS: MAIN ENTRY U=0.20

ALL OTHERS U=0.40

WINDOWS: MILGARD VINYL

TYPE (VINYL)	MODEL	U-VALUE
SLIDING	6110 ARGON/LoE	0.24 or BETTER
FIXED	6310 ARGON/LoE	0.24 or BETTER
SINGLE HUNG	6210 ARGON/LoE	0.24 or BETTER
DBL. SLIDER	8125 ARGON/LoE	0.24 or BETTER
SGD	6610 ARGON/LoE	0.24 or BETTER

NOTE: ALL CONCEALED OR EXPOSED INSULATION SHALL HAVE A FLAME SPREAD INDEX OF NOT MORE THAN 25 AND A SMOKE-DEVELOPED INDEX OF NOT MORE THAN 450

STANDARD PLATE HEIGHT: 9'-1"

SEE ELEVATION SHEETS FOR FLOOR TO FLOOR HEIGHTS

WINDOW HDR IS 8'-0" UNLESS NOTED OTHERWISE

SEE SHEET U6 FOR INTERIOR ELEVATIONS

GYPSUM WALLBOARD SCHEDULE

EXCEPT WHERE NOTED OTHERWISE, ⅝" TYPE 'X' GYPSUM WALLBOARD SHALL BE USED THROUGHOUT; ON INTERIOR NON-RATED WALLS, EXTERIOR WALLS, CORRIDOR WALLS, AND 1-HOUR AND 2-HOUR FIRE-RATED WALLS.

DOOR KEY:

X DOOR TAG. SEE SHEET U14 FOR SCHEDULE

WINDOW KEY:

TYPE:
FIX = FIXED/PICTURE
SL = SLIDER
SH = SINGLE HUNG
SGD = SLIDING GLASS DOOR

ACCESSIBILITY NOTES:

ALL GROUND FLOOR UNITS IN THIS PROJECT MUST MEET THE ACCESSIBILITY REQUIREMENTS OF 'TYPE B' ACCESSIBLE UNITS AS REQUIRED BY CHAPTER 11 OF THE 2018 IBC.

INCLUDED IN THE ABOVE GROUND FLOOR UNITS 5% OF ALL UNITS NEED TO MEET THE ACCESSIBILITY REQUIREMENTS OF 'TYPE A' ACCESSIBLE UNITS AS REQUIRED BY CHAPTER 11 OF THE 2018 IBC. SEE BUILDING PLANS FOR LOCATION OF 'TYPE A' UNITS

SEE SHEET U11 & U11.1 FOR SPECIFIC ADAPTABILITY STANDARD FOR BOTH 'TYPE A' AND 'TYPE B' ACCESSIBLE UNITS. SEE INTERIOR ELEVATION SHEETS FOR ADDITIONAL ACCESSIBILITY REQUIREMENTS.

LIGHTING CONTROLS, ELECTRICAL SWITCHES, ENVIRONMENTAL CONTROLS, OPERATING HARDWARE FOR DOORS AND WINDOWS, AND PLUMBING FIXTURE CONTROLS SHALL BE OPERABLE WITH ONE HAND AND SHALL NOT REQUIRE TIGHT GRASPING, PINCHING OR TWISTING OF THE WRIST TO OPERATE. EXCEPT FOR OPERABLE DOOR HARDWARE, SUCH ITEMS SHALL BE 15" MINIMUM AND 44" MAXIMUM ABOVE THE FLOOR (48" FOR WINDOWS).

OPERABLE ENTRY DOOR HARDWARE SHALL BE 34" MINIMUM AND 48" MAXIMUM ABOVE THE FLOOR.

OPENING FORCES FOR ENTRY DOOR SHALL BE:
15 POUNDS TO RELEASE THE LATCH
30 POUNDS TO SET DOOR IN MOTION
15 POUNDS TO OPEN DOOR TO FULL 90°
FORCE MEASURED AT LATCH SIDE OF DOOR.

THE DOOR CLOSER ON THE ENTRY DOOR SHALL BE ADJUSTED TO CLOSE FROM AN OPEN POSITION OF 90° TO AN OPEN POSITION OF 12° IN NOT LESS THAN 5 SECONDS.

OPENING FORCE OF ALL SWINGING INTERIOR DOORS AND THE SLIDING GLASS DOOR SHALL NOT EXCEED 5 POUNDS APPLIED TO THE LATCH SIDE OF THE DOOR.

THE FORCE REQUIRED TO ACTIVATE ALL OTHER OPERABLE ITEMS LISTED ABOVE SHALL BE 5 POUNDS.

*BIFOLD DOOR HARDWARE AT LAUNDRY TO BE 'FULL ACCESS HARDWARE'.

THE 30"x48" CLEAR FLOOR SPACE IS REQUIRED AT EACH FIXTURE OR LOCATION SHOWN ON THE FLOOR PLAN.

30X48

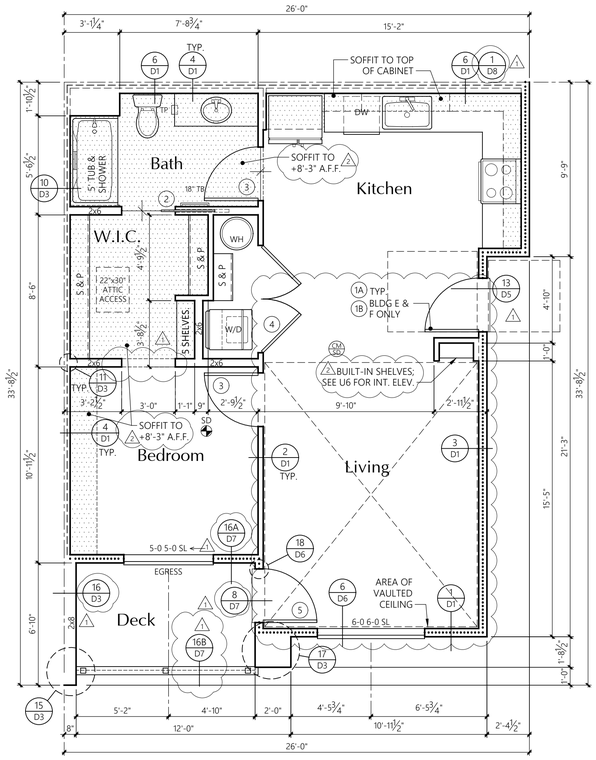

1-BED-INT-1 UNIT

1/4" = 1'-0"

NON-ACCESSIBLE
3rd LEVEL FLOOR PLAN

AREA SUMMARY		
	Heated SF	Patio/Deck SF
Total SF	684	61

* Side of exterior walls to which area was measured

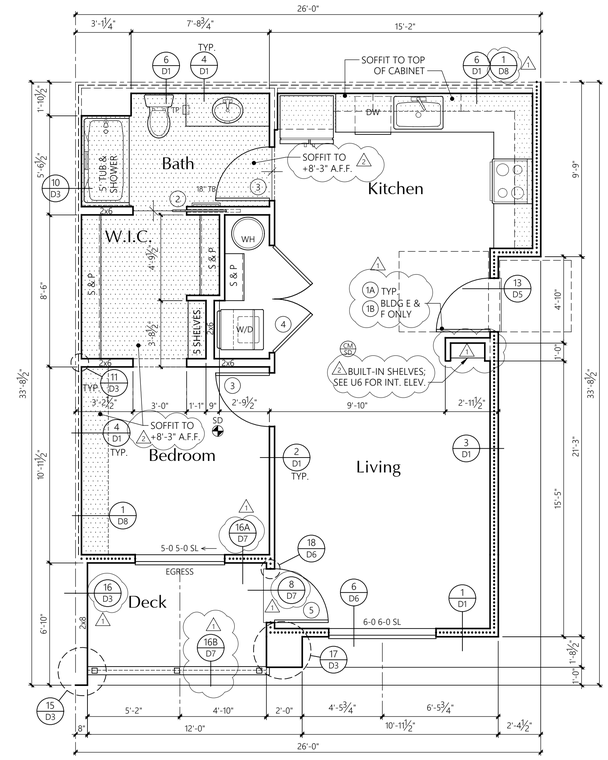

1-BED-INT-1 UNIT

1/4" = 1'-0"

NON-ACCESSIBLE
2nd LEVEL FLOOR PLAN

AREA SUMMARY		
	Heated SF	Patio/Deck SF
Total SF	684	61

* Side of exterior walls to which area was measured

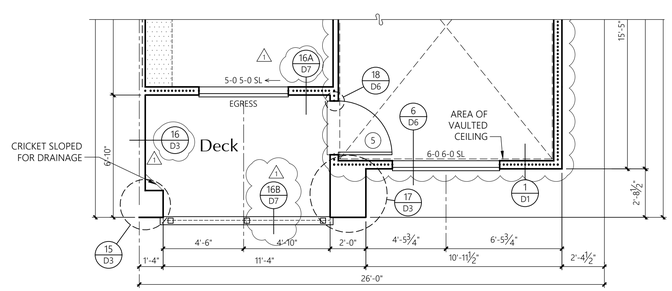

1-BED-INT-2 UNIT

1/4" = 1'-0"

NON-ACCESSIBLE
3rd LEVEL FLOOR PLAN

AREA SUMMARY		
	Heated SF	Patio/Deck SF
Total SF	684	71

* Side of exterior walls to which area was measured

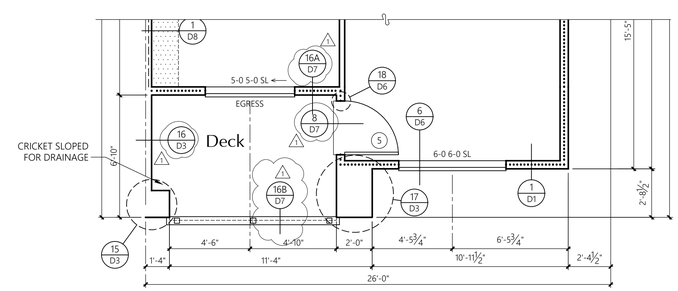

1-BED-INT-2 UNIT

1/4" = 1'-0"

NON-ACCESSIBLE
2nd LEVEL FLOOR PLAN

AREA SUMMARY		
	Heated SF	Patio/Deck SF
Total SF	684	71

* Side of exterior walls to which area was measured

MILBRANDT ARCHITECTS
25 Central Way, Suite 210
Kirkland, Washington 98033
P: 425.454.7130 F: 425.658.1208
Web: www.milbrandtarch.com

© Copyright 2023
Milbrandt Architects, INC., P.S.
All rights reserved

11063 REGISTERED ARCHITECT
ANNA P. THOMPSON
STATE OF WASHINGTON

1-Bed-Int Unit

2nd & 3rd Level Floor Plans

Bradley Heights Apartments

Puyallup, Wa

Timberlane Partners

Revisions

No.	Date	Description
1	8-30-24	Owner Changes/ Permit Corrections

PRMU20240279

Initial Publish Date:

Date Plotted: 5-1-25

Job No.: 23-06

Drawn By: APT/HDM/TMK

Sheet No.: U2

H:\2306\1_BED_INT_UNIT.DWG

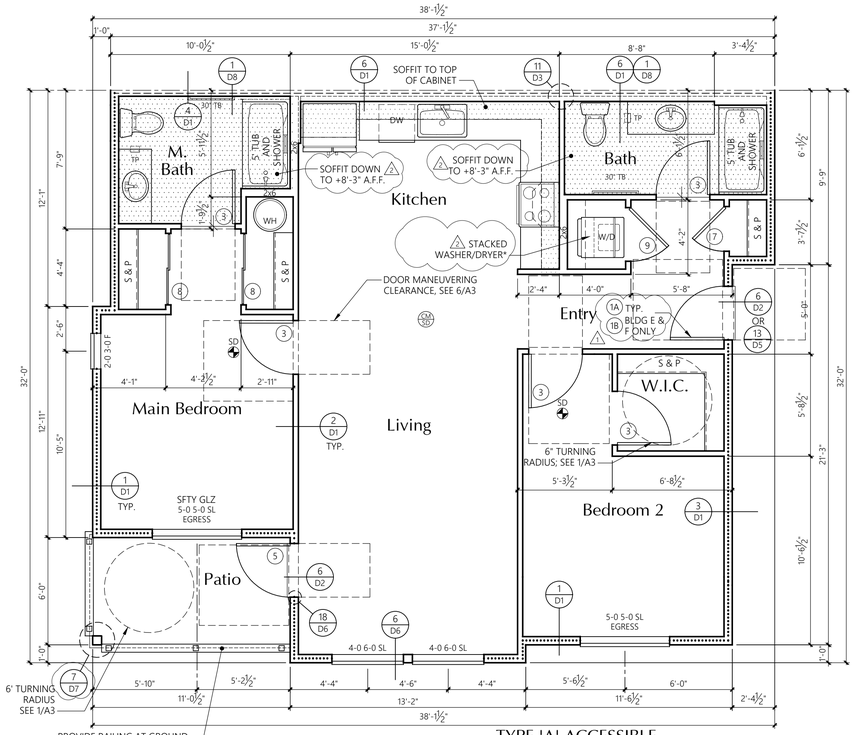

2 BED UNIT

TYPE 'A' ACCESSIBLE
1st LEVEL FLOOR PLAN

1/4" = 1'-0"

AREA SUMMARY		
	Heated SF	Patio/Deck SF
Total SF	1019	66

*STACKED WASHER/DRYER IN TYPE 'A' UNIT TO BE REPLACED WITH ACCESSIBLE COMBO UNIT AS REQUIRED BY TENANT. ACCESSIBLE COMBO UNIT TO BE PURCHASED IN ADVANCE AND STORED ON SITE. SEE DETAIL 20/U11.1 FOR ADDITIONAL REQUIREMENTS.

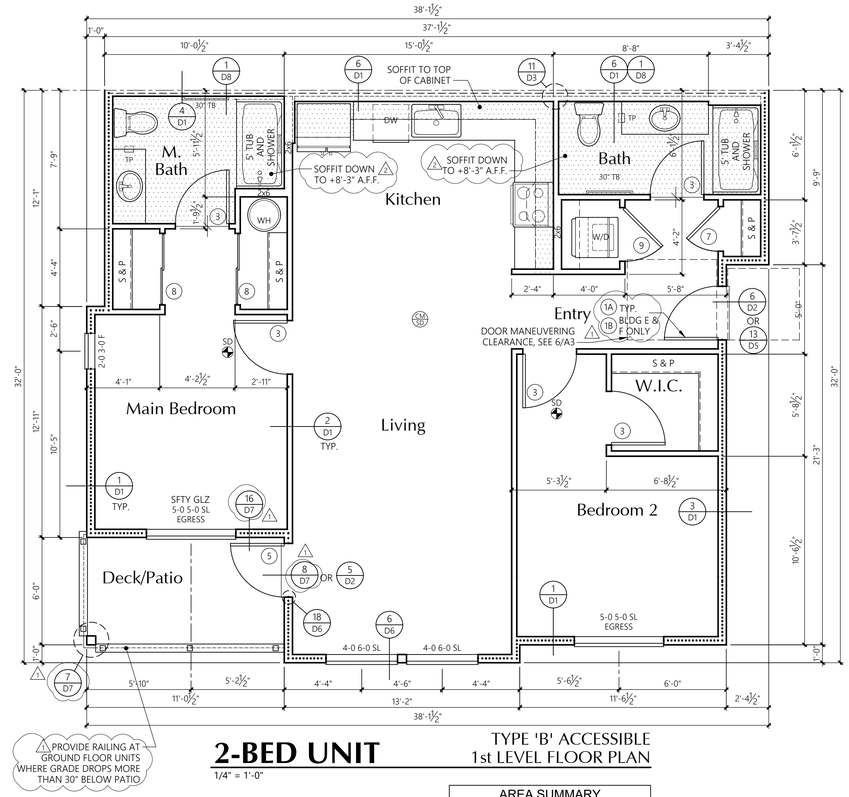

2-BED UNIT

TYPE 'B' ACCESSIBLE
1st LEVEL FLOOR PLAN

1/4" = 1'-0"

AREA SUMMARY		
	Heated SF	Patio/Deck SF
Total SF	1019	66

UNIT PLAN NOTES

FRAMING: 2x6'S AT EXTERIOR WALLS
2x4'S AT INTERIOR WALLS
UNLESS NOTED OTHERWISE.

R-21 BATT INSULATION U.N.O.

R-13 BATT INSULATION
3½" ACOUSTICAL INSULATION BOTH SIDES OF PARTYWALL, U.N.O.

LOCATION OF SOFFIT FOR VENT RUNS. SOFFIT HEIGHT +8'-0" A.F.F. U.N.O. ON PLANS; SEE DETAIL 1/D8

SD SMOKE DETECTOR

CM CO CARBON MONOXIDE/SMOKE DETECTOR

CONCEALED SPACES SHALL BE FIRESTOPPED IN BOTH DIRECTIONS AT 10'-0" ON CENTER AND AT FLOORS. TYPICAL.

ALL ESCAPE OR RESCUE WINDOWS FROM SLEEPING ROOMS SHALL HAVE A MINIMUM NET CLEAR OPENING OF 5.7 SQUARE FEET. THE MINIMUM CLEAR OPENING HEIGHT DIMENSION SHALL BE 24". MINIMUM CLEAR OPENING WIDTH DIMENSION SHALL BE 20". EMERGENCY ESCAPE AND RESCUE OPENINGS SHALL HAVE THE BOTTOM OF CLEAR OPENING NOT GREATER THAN 44 INCHES MEASURED FROM THE FLOOR.

WHERE THE OPENING OF THE SILL PORTION OF AN OPERABLE WINDOW IS LOCATED MORE THAN 72 INCHES ABOVE THE FINISHED GRADE OR OTHER SURFACE BELOW, THE LOWEST PART OF THE CLEAR OPENING OF THE WINDOW SHALL BE AT A HEIGHT NOT LESS THAN 36 INCHES ABOVE THE FINISHED FLOOR SURFACE OF THE ROOM IN WHICH THE WINDOW IS LOCATED. OPERABLE SECTIONS OF WINDOWS SHALL NOT PERMIT OPENINGS THAT ALLOW PASSAGE OF A 4 INCH DIAMETER SPHERE WHERE SUCH OPENINGS ARE LOCATED WITHIN 36 INCHES OF THE FINISHED FLOOR.

ALL GLAZING SHALL CONFORM TO THE 2018 IBC, CHAPTER 24, SEC. 2406, SAFETY GLAZING. GLAZING IN ALL DOORS SHALL BE SAFETY TYPE AND ALL GLAZING WITHIN A 24" ARC OF EITHER VERTICAL EDGE SHALL BE SAFETY TYPE.

PROVIDE ⅝" TYPE 'X' (MIN.) GYPSUM SHEATHING ON WALLS BEHIND TUB/SHOWERS TO SATISFY FIRE REQUIREMENTS AT PARTYWALL CONDITION. PROVIDE ¾" PLYWOOD UNDER TUB IN PLACE OF THE GYPCRETE. SEE DETAIL 14/D1

PROVIDE WATER RESISTANT GYPSUM WALLBOARD BEHIND TUB AND SHOWER ENCLOSURE MATERIALS TO A HEIGHT OF 70" MINIMUM ABOVE THE DRAIN INLET.

ALL BEDROOM AND BATHROOM DOORS SHALL BE UNDERCUT A MINIMUM OF 1/2" ABOVE THE ADJACENT FLOOR COVERING.

THE FRONT DOOR SHALL BE OPENABLE FROM THE INSIDE WITHOUT THE USE OF A KEY OR ANY SPECIAL KNOWLEDGE OR EFFORT. IT MAY BE PROVIDED WITH A NIGHT LATCH, DEAD BOLT OR SECURITY CHAIN, PROVIDED SUCH DEVICES ARE OPENABLE FROM THE INSIDE WITHOUT THE USE OF A KEY OR TOOL, AND MOUNTED NOT TO EXCEED 48" ABOVE THE FINISHED FLOOR.

GYPSUM WALLBOARD SCHEDULE
EXCEPT WHERE NOTED OTHERWISE, ⅝" TYPE 'X' GYPSUM WALLBOARD SHALL BE USED THROUGHOUT; ON INTERIOR NON-RATED WALLS, EXTERIOR WALLS, CORRIDOR WALLS, AND 1-HOUR AND 2-HOUR FIRE-RATED WALLS.

STANDARD PLATE HEIGHT: 9'-1"

SEE ELEVATION SHEETS FOR FLOOR TO FLOOR HEIGHTS

WINDOW HDR IS 8'-0" UNLESS NOTED OTHERWISE

SEE SHEET U9 FOR INTERIOR ELEVATIONS

DOOR KEY:

X DOOR TAG. SEE SHEET U14 FOR SCHEDULE

WINDOW KEY:

TYPE:
FIX = FIXED/PICTURE
SL = SLIDER
SH = SINGLE HUNG
SGD = SLIDING GLASS DOOR

INSULATION

FOUNDATION PERIMETER - R-10 RIGID INSULATION TO A DEPTH OF 24" OR TO TOP OF FOOTING AT HEATED PERIMETER

EXTERIOR WALLS: FIBERGLASS BATTS OR BLANKETS 2x6 WALLS - R21

FLOORS OVER UNHEATED SPACES - R30

ATTICS AND ROOF ASSEMBLIES - R-49 FULL HEIGHT OF UNCOMPRESSED INSULATION EXTENDS OVER THE WALL TOP PLATE AT THE EAVES

EXTERIOR DOORS: MAIN ENTRY U=0.20
ALL OTHERS U=0.40

WINDOWS: MILGARD VINYL

TYPE (VINYL)	MODEL	U-VALUE
SLIDING	6110 ARGON/LoE	0.24 or BETTER
FIXED	6310 ARGON/LoE	0.24 or BETTER
SINGLE HUNG	6210 ARGON/LoE	0.24 or BETTER
DBL. SLIDER	8125 ARGON/LoE	0.24 or BETTER
SGD	6610 ARGON/LoE	0.24 or BETTER

NOTE: ALL CONCEALED OR EXPOSED INSULATION SHALL HAVE A FLAME SPREAD INDEX OF NOT MORE THAN 25 AND A SMOKE-DEVELOPED INDEX OF NOT MORE THAN 450

ACCESSIBILITY NOTES:

ALL GROUND FLOOR UNITS IN THIS PROJECT MUST MEET THE ACCESSIBILITY REQUIREMENTS OF 'TYPE B' ACCESSIBLE UNITS AS REQUIRED BY CHAPTER 11 OF THE 2018 IBC.

INCLUDED IN THE ABOVE GROUND FLOOR UNITS 5% OF ALL UNITS NEED TO MEET THE ACCESSIBILITY REQUIREMENTS OF 'TYPE A' ACCESSIBLE UNITS AS REQUIRED BY CHAPTER 11 OF THE 2018 IBC. SEE BUILDING PLANS FOR LOCATION OF 'TYPE A' UNITS

SEE SHEET U11 & U11.1 FOR SPECIFIC ADAPTABILITY STANDARD FOR BOTH 'TYPE A' AND 'TYPE B' ACCESSIBLE UNITS. SEE INTERIOR ELEVATION SHEETS FOR ADDITIONAL ACCESSIBILITY REQUIREMENTS.

LIGHTING CONTROLS, ELECTRICAL SWITCHES, ENVIRONMENTAL CONTROLS, OPERATING HARDWARE FOR DOORS AND WINDOWS, AND PLUMBING FIXTURE CONTROLS SHALL BE OPERABLE WITH ONE HAND AND SHALL NOT REQUIRE TIGHT GRASPING, PINCHING OR TWISTING OF THE WRIST TO OPERATE. EXCEPT FOR OPERABLE DOOR HARDWARE, SUCH ITEMS SHALL BE 15" MINIMUM AND 44" MAXIMUM ABOVE THE FLOOR (48" FOR WINDOWS).

OPERABLE ENTRY DOOR HARDWARE SHALL BE 34" MINIMUM AND 48" MAXIMUM ABOVE THE FLOOR.

OPENING FORCES FOR ENTRY DOOR SHALL BE:
15 POUNDS TO RELEASE THE LATCH
30 POUNDS TO SET DOOR IN MOTION
15 POUNDS TO OPEN DOOR TO FULL 90°
FORCE MEASURED AT LATCH SIDE OF DOOR.

THE DOOR CLOSER ON THE ENTRY DOOR SHALL BE ADJUSTED TO CLOSE FROM AN OPEN POSITION OF 90° TO AN OPEN POSITION OF 12° IN NOT LESS THAN 5 SECONDS.

OPENING FORCE OF ALL SWINGING INTERIOR DOORS AND THE SLIDING GLASS DOOR SHALL NOT EXCEED 5 POUNDS APPLIED TO THE LATCH SIDE OF THE DOOR.

THE FORCE REQUIRED TO ACTIVATE ALL OTHER OPERABLE ITEMS LISTED ABOVE SHALL BE 5 POUNDS.

*BIFOLD DOOR HARDWARE AT LAUNDRY TO BE 'FULL ACCESS HARDWARE'.

THE 30"x48" CLEAR FLOOR SPACE IS REQUIRED AT EACH FIXTURE OR LOCATION SHOWN ON THE FLOOR PLAN.

30X48

City of Puyallup
Development & Permitting Services
Stamp review

Building	Planning	
Engineering	Public Works	
Fire	Parks	

MILBRANDT ARCHITECTS

25 Central Way, Suite 210
Kirkland, Washington 98033
P: 425.454.7130 F: 425.658.1208
Web: www.milbrandtarch.com

© Copyright 2023
Milbrandt Architects, INC., P.S.
All rights reserved

11063 REGISTERED ARCHITECT
ANNA P. THOMPSON
STATE OF WASHINGTON

2-Bed Unit
1st Level Floor Plans

Bradley Heights Apartments

Puyallup, Wa

Timberlane Partners

Revisions

No.	Date	Description
1	8-30-24	Owner Changes/ Permit Corrections

PRMU20240279

Initial Publish Date:

Date Plotted: 5-1-25

Job No.: 23-06

Drawn By: APT/HDM/TMK

Sheet No.: U4

H:\2308\2 BED UNIT.DWG

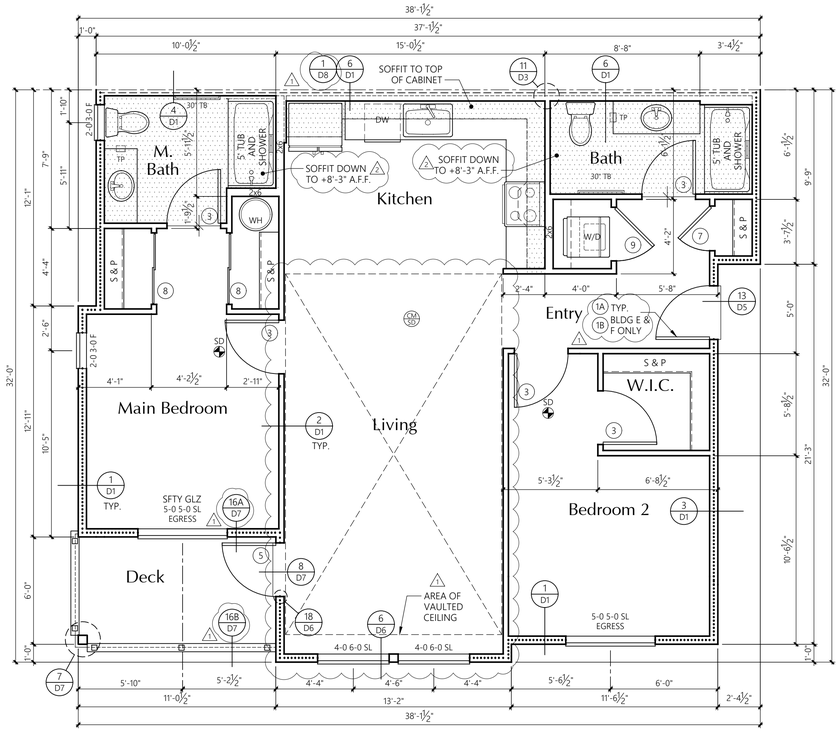

2-BED UNIT

NON-ACCESSIBLE
3rd LEVEL FLOOR PLAN

1/4" = 1'-0"

AREA SUMMARY		
	Heated SF	Patio/Deck SF
Total SF	1019	66

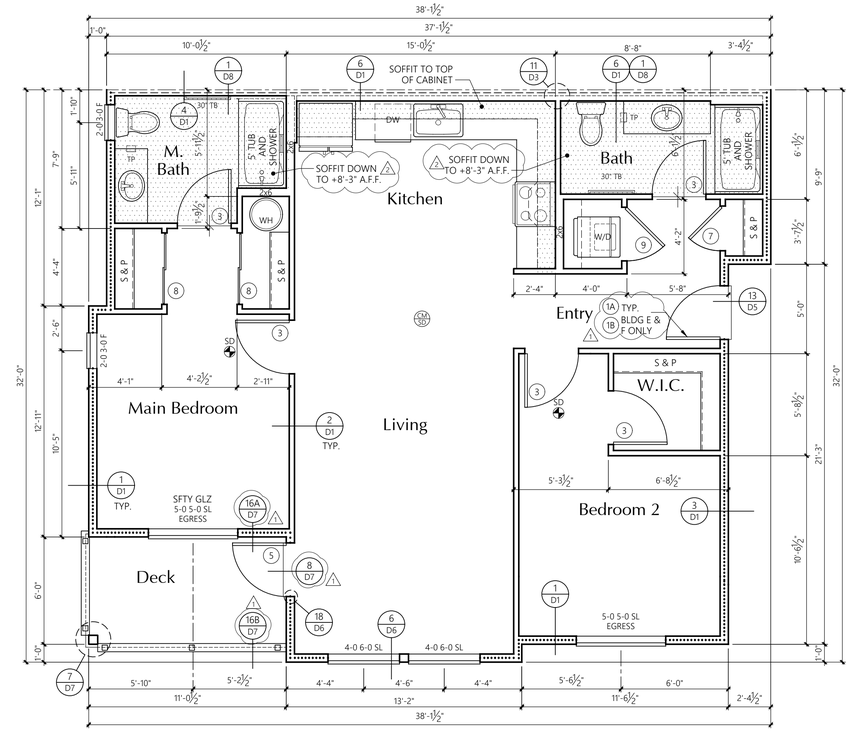

2-BED UNIT

NON-ACCESSIBLE
2nd LEVEL FLOOR PLAN

1/4" = 1'-0"

AREA SUMMARY		
	Heated SF	Patio/Deck SF
Total SF	1019	66

UNIT PLAN NOTES

FRAMING: 2x6'S AT EXTERIOR WALLS
2x4'S AT INTERIOR WALLS
UNLESS NOTED OTHERWISE.

R-21 BATT INSULATION U.N.O.

R-13 BATT INSULATION
3⅝" ACOUSTICAL INSULATION BOTH SIDES OF PARTYWALL, U.N.O.

LOCATION OF SOFFIT FOR VENT RUNS. SOFFIT HEIGHT +8'-0" A.F.F. U.N.O. ON PLANS; SEE DETAIL 1/D8

SD SMOKE DETECTOR

CM CARBON MONOXIDE/SMOKE DETECTOR

CONCEALED SPACES SHALL BE FIRESTOPPED IN BOTH DIRECTIONS AT 10'-0" ON CENTER AND AT FLOORS. TYPICAL.

ALL ESCAPE OR RESCUE WINDOWS FROM SLEEPING ROOMS SHALL HAVE A MINIMUM NET CLEAR OPENING OF 5.7 SQUARE FEET. THE MINIMUM CLEAR OPENING HEIGHT DIMENSION SHALL BE 24". MINIMUM CLEAR OPENING WIDTH DIMENSION SHALL BE 20". EMERGENCY ESCAPE AND RESCUE OPENINGS SHALL HAVE THE BOTTOM OF CLEAR OPENING NOT GREATER THAN 44 INCHES MEASURED FROM THE FLOOR.

WHERE THE OPENING OF THE SILL PORTION OF AN OPERABLE WINDOW IS LOCATED MORE THAN 72 INCHES ABOVE THE FINISHED GRADE OR OTHER SURFACE BELOW, THE LOWEST PART OF THE CLEAR OPENING OF THE WINDOW SHALL BE AT A HEIGHT NOT LESS THAN 36 INCHES ABOVE THE FINISHED FLOOR SURFACE OF THE ROOM IN WHICH THE WINDOW IS LOCATED. OPERABLE SECTIONS OF WINDOWS SHALL NOT PERMIT OPENINGS THAT ALLOW PASSAGE OF A 4 INCH DIAMETER SPHERE WHERE SUCH OPENINGS ARE LOCATED WITHIN 36 INCHES OF THE FINISHED FLOOR.

ALL GLAZING SHALL CONFORM TO THE 2018 IBC, CHAPTER 24, SEC. 2406, SAFETY GLAZING. GLAZING IN ALL DOORS SHALL BE SAFETY TYPE AND ALL GLAZING WITHIN A 24" ARC OF EITHER VERTICAL EDGE SHALL BE SAFETY TYPE.

PROVIDE ⅝" TYPE 'X' (MIN.) GYPSUM SHEATHING ON WALLS BEHIND TUB/SHOWERS TO SATISFY FIRE REQUIREMENTS AT PARTYWALL CONDITION. PROVIDE ¾" PLYWOOD UNDER TUB IN PLACE OF THE GYPCRETE, SEE DETAIL 14/D1

PROVIDE WATER RESISTANT GYPSUM WALLBOARD BEHIND TUB AND SHOWER ENCLOSURE MATERIALS TO A HEIGHT OF 70" MINIMUM ABOVE THE DRAIN INLET.

ALL BEDROOM AND BATHROOM DOORS SHALL BE UNDERCUT A MINIMUM OF 1/2" ABOVE THE ADJACENT FLOOR COVERING.

THE FRONT DOOR SHALL BE OPENABLE FROM THE INSIDE WITHOUT THE USE OF A KEY OR ANY SPECIAL KNOWLEDGE OR EFFORT. IT MAY BE PROVIDED WITH A NIGHT LATCH, DEAD BOLT OR SECURITY CHAIN, PROVIDED SUCH DEVICES ARE OPENABLE FROM THE INSIDE WITHOUT THE USE OF A KEY OR TOOL, AND MOUNTED NOT TO EXCEED 48" ABOVE THE FINISHED FLOOR.

GYPSUM WALLBOARD SCHEDULE
EXCEPT WHERE NOTED OTHERWISE, ⅝" TYPE 'X' GYPSUM WALLBOARD SHALL BE USED THROUGHOUT; ON INTERIOR NON-RATED WALLS, EXTERIOR WALLS, CORRIDOR WALLS, AND 1-HOUR AND 2-HOUR FIRE-RATED WALLS.

STANDARD PLATE HEIGHT: 9'-1"

SEE ELEVATION SHEETS FOR FLOOR TO FLOOR HEIGHTS

WINDOW HDR IS 8'-0" UNLESS NOTED OTHERWISE

SEE SHEET U9 FOR INTERIOR ELEVATIONS

DOOR KEY:

X DOOR TAG. SEE SHEET U14 FOR SCHEDULE

WINDOW KEY:

TYPE:
FIX = FIXED/PICTURE
SL = SLIDER
SH = SINGLE HUNG
SGD = SLIDING GLASS DOOR

INSULATION

FOUNDATION PERIMETER - R-10 RIGID INSULATION TO A DEPTH OF 24" OR TO TOP OF FOOTING AT HEATED PERIMETER

EXTERIOR WALLS: FIBERGLASS BATTS OR BLANKETS 2x6 WALLS - R21

FLOORS OVER UNHEATED SPACES - R30

ATTICS AND ROOF ASSEMBLIES - R-49 FULL HEIGHT OF UNCOMPRESSED INSULATION EXTENDS OVER THE WALL TOP PLATE AT THE EAVES

EXTERIOR DOORS: MAIN ENTRY U=0.20

ALL OTHERS U=0.40

WINDOWS: MILGARD VINYL

TYPE (VINYL)	MODEL	U-VALUE
SLIDING	6110 ARGON/LoE	0.24 or BETTER
FIXED	6310 ARGON/LoE	0.24 or BETTER
SINGLE HUNG	6210 ARGON/LoE	0.24 or BETTER
DBL. SLIDER	8125 ARGON/LoE	0.24 or BETTER
SGD	6610 ARGON/LoE	0.24 or BETTER

NOTE: ALL CONCEALED OR EXPOSED INSULATION SHALL HAVE A FLAME SPREAD INDEX OF NOT MORE THAN 25 AND A SMOKE-DEVELOPED INDEX OF NOT MORE THAN 450

H:\2306\2_BED_UNIT.DWG

City of Puyallup
Innovation & Technology Services
Stamp review
Building | Planning
Engineering | Public Works
Fire | Parks

MILBRANDT ARCHITECTS

25 Central Way, Suite 210
Kirkland, Washington 98033
P: 425.454.7130 F: 425.658.1208
Web: www.milbrandtarch.com

© Copyright 2023
Milbrandt Architects, INC., P.S.
All rights reserved

11063 REGISTERED ARCHITECT
ANNA P. THOMPSON
STATE OF WASHINGTON

2-Bed Unit

2nd & 3rd Level Floor Plans

Bradley Heights Apartments

Puyallup, Wa

Timberlane Partners

Revisions

No.	Date	Description
1	8-30-24	Owner Changes/ Permit Corrections

PRMU20240279

Initial Publish Date:

Date Plotted: 5-1-25

Job No.: 23-06

Drawn By: APT/HDM/TMK

Sheet No.:

U5

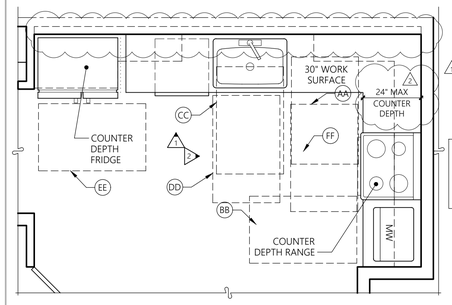

ENSURE OUTLET LOCATIONS COMPLY WITH REACH RANGES PER ICC A117.1 1003.9 AND FHADM 5.8

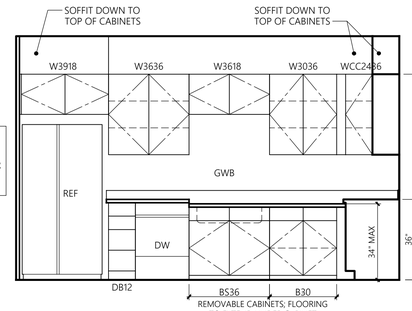

1-BED-INT-1 & 1-BED-INT-2 TYPE 'A' KITCHEN PLAN

3/8" = 1'-0"

1 KITCHEN

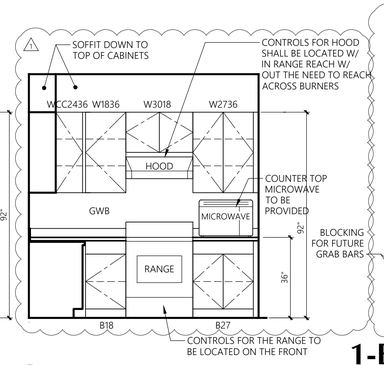

2 KITCHEN

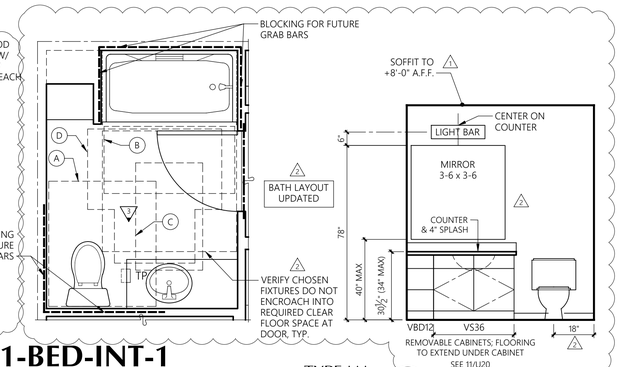

1-BED-INT-1 & 1-BED-INT-2 TYPE 'A' BATH PLAN

3/8" = 1'-0"

3 BATH

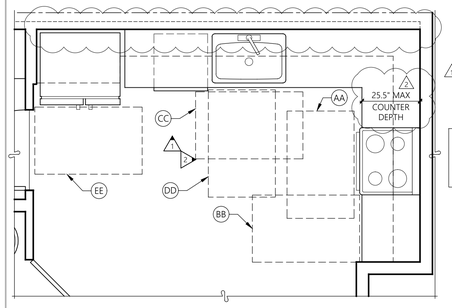

ENSURE OUTLET LOCATIONS COMPLY WITH REACH RANGES PER ICC A117.1 1004.9

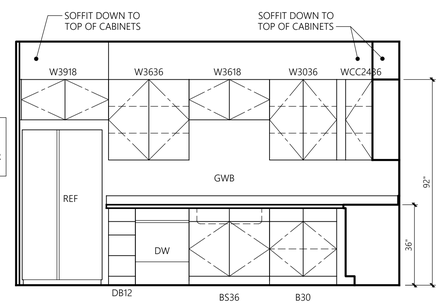

1-BED-INT-1 & 1-BED-INT-2 TYPE 'B' KITCHEN PLAN

3/8" = 1'-0"

1 KITCHEN

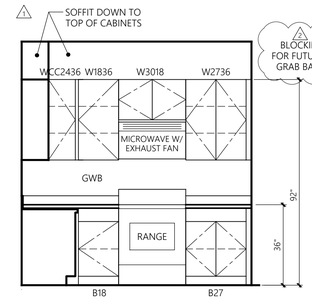

2 KITCHEN

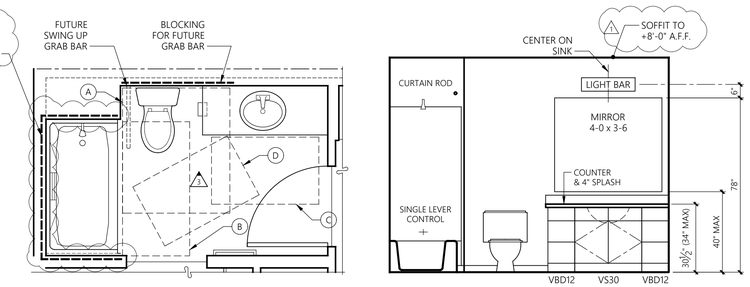

1-BED-INT-1 & 1-BED-INT-2 TYPE 'B' BATHROOM PLAN

3/8" = 1'-0"

3 BATH

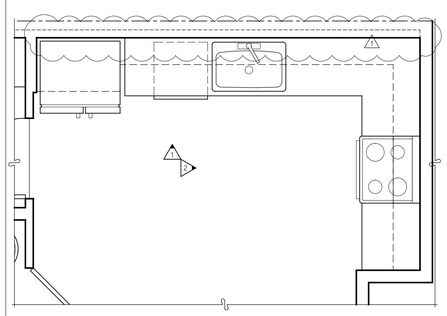

1-BED-INT- 1, 2, ALT-1 & ALT-2 NON-ACCESSIBLE KITCHEN PLAN

3/8" = 1'-0"

1 KITCHEN

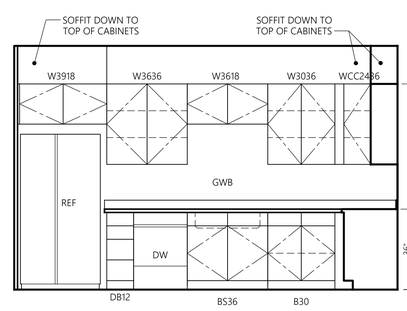

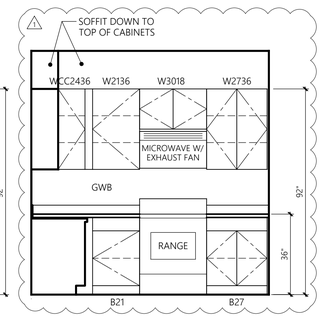

2 KITCHEN

1-BED-INT- 1, 2, ALT-1, & ALT-2 NON-ACC. BATH PLAN

3/8" = 1'-0"

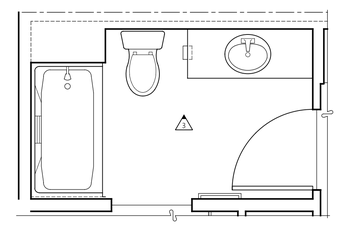

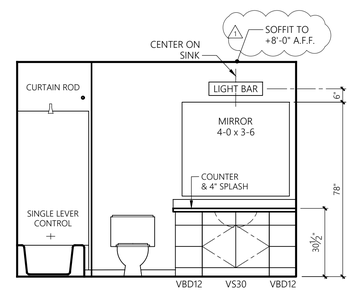

3 BATH

*SEE SHEET U11 & 1 U11.1 FOR ADDITIONAL ACCESSIBILITY STANDARDS

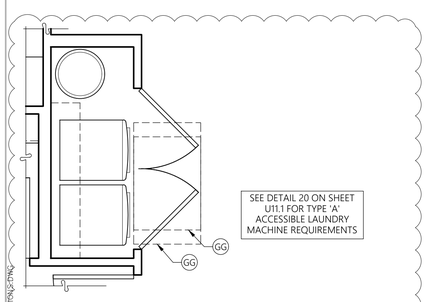

SEE DETAIL 20 ON SHEET U11.1 FOR TYPE 'A' ACCESSIBLE LAUNDRY MACHINE REQUIREMENTS

1-BED-INT-1 & 1-BED-INT-2 TYPE 'A' & 'B' LAUNDRY PLAN

3/8" = 1'-0"

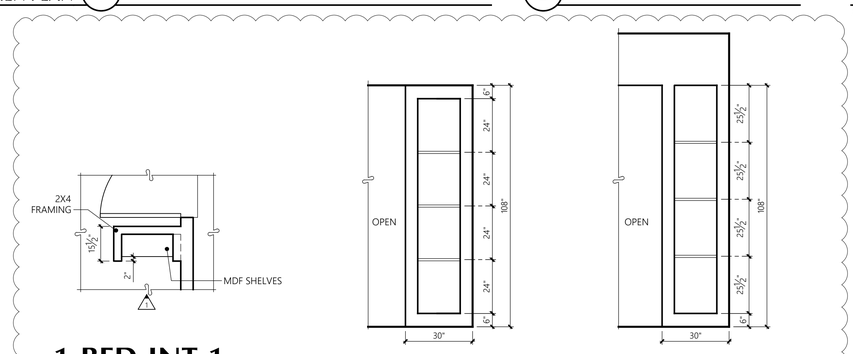

1-BED-INT-1 & 1-BED-INT-2

3/8" = 1'-0"

1a LIVING ROOM BUILT-IN SHELVING
AT BASEMENT, FIRST AND SECOND LEVELS

1b LIVING ROOM BUILT-IN SHELVING
AT THIRD FLOOR VAULTED CEILING

CLEAR FLOOR SPACE LEGEND
TYPE A UNIT

- (A) 60x66 CLEAR FLOOR SPACE AT TOILET.
- (B) 30x60 CLEAR FLOOR SPACE AT TUB.
- (C) 30"x48" CLEAR FLOOR SPACE CENTERED ON SINK
- (D) 60" DIAMETER TURNING CIRCLE OR T-SHAPE TURNING SPACE
- (AA) 30x48 CLEAR FLOOR SPACE AT STOVE.
- (BB) 30x48 CLEAR FLOOR SPACE AT OVEN.
- (CC) 30x48 CLEAR FLOOR SPACE AT SINK.
- (DD) 30x48 CLEAR FLOOR SPACE AT DISHWASHER.
- (EE) 30x48 CLEAR FLOOR SPACE AT REFRIGERATOR.
- (FF) 30x48 CLEAR FLOOR SPACE AT WORK SURFACE.
- (GG) 30x48 CLEAR FLOOR SPACE AT WASHER/DRYER

CLEAR FLOOR SPACE LEGEND
TYPE B UNIT

- (A) 48x56 CLEAR FLOOR SPACE AT TOILET.
- (B) 30x48 CLEAR FLOOR SPACE AT TUB.
- (C) 30"x48" CLEAR FLOOR SPACE CENTERED ON SINK
- (D) 30"x48" CLEAR FLOOR SPACE BEYOND ARC OF DOOR.
- (AA) 30x48 CLEAR FLOOR SPACE AT STOVE.
- (BB) 30x48 CLEAR FLOOR SPACE AT OVEN.
- (CC) 30x48 CLEAR FLOOR SPACE AT SINK.
- (DD) 30x48 CLEAR FLOOR SPACE AT DISHWASHER.
- (EE) 30x48 CLEAR FLOOR SPACE AT REFRIGERATOR.
- (GG) 30x48 CLEAR FLOOR SPACE AT WASHER/DRYER

City of Puyallup
Permitted & Processing Services
Stamp on plans
Building | Planning
Engineering | Public Works
Fire | Parks

MILBRANDT ARCHITECTS

25 Central Way, Suite 210
Kirkland, Washington 98033
P: 425.454.7130 F: 425.658.1208
Web: www.milbrandtarch.com

© Copyright 2023
Milbrandt Architects, INC., P.S.
All rights reserved

11063 REGISTERED ARCHITECT
ANNA P. THOMPSON
STATE OF WASHINGTON

Interior Elevations

1-Bed-Int-1, 1-Bed-Int-2,
1-Bed-Int-Alt-1, & 1-Bed-Int-Alt-2

Bradley Heights Apartments

Puyallup, Wa

Timberlane Partners

Revisions

No.	Date	Description
1	8-30-24	Owner Changes/ Permit Corrections

PRMU20240279

Initial Publish Date:

Date Plotted: 5-1-25

Job No.: 23-06

Drawn By: APT/HDM/TMK

Sheet No.: U6

H:\2300\PRINTSETS\PRIV_ELEVATIONS(SET).DWG

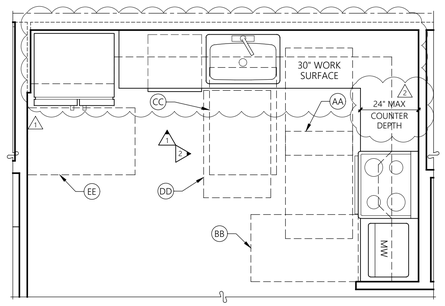

ENSURE OUTLET LOCATIONS COMPLY WITH REACH RANGES PER ICC A117.1 1003.9 AND FHADM 5.8

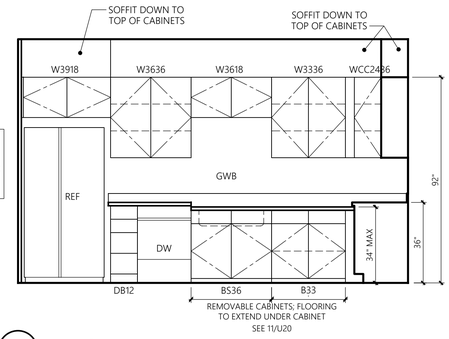

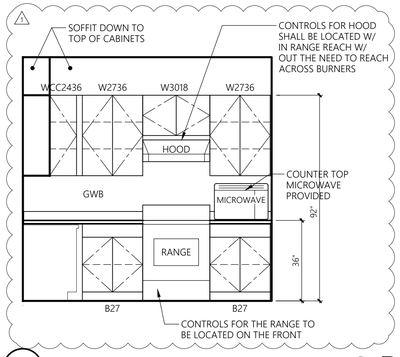

2-BED & 2-BED-ALT

3/8" = 1'-0"

TYPE 'A' KITCHEN PLAN (1) KITCHEN (2) KITCHEN

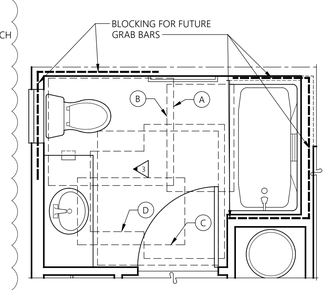

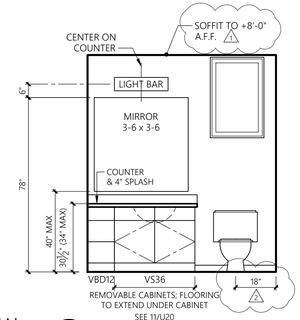

2-BED & 2-BED-ALT

3/8" = 1'-0"

TYPE 'A' M. BATH PLAN (3) MAIN BATH

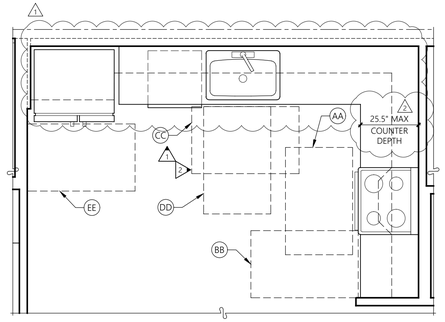

ENSURE OUTLET LOCATIONS COMPLY WITH REACH RANGES PER ICC A117.1 1004.9

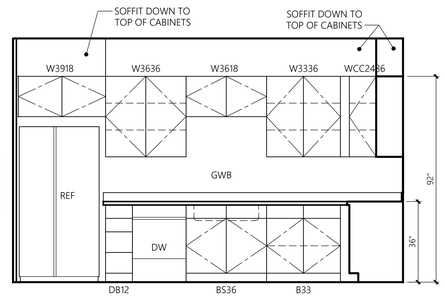

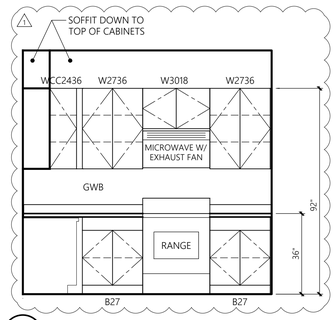

2-BED & 2-BED-ALT

3/8" = 1'-0"

TYPE 'B' KITCHEN PLAN (1) KITCHEN (2) KITCHEN

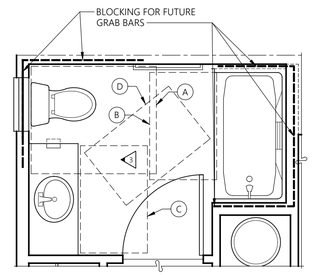

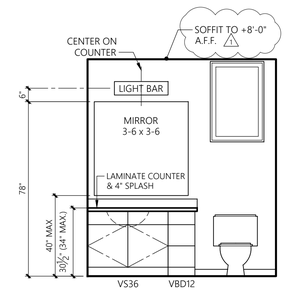

2-BED & 2-BED-ALT

3/8" = 1'-0"

TYPE 'B' M. BATH PLAN (3) MAIN BATH

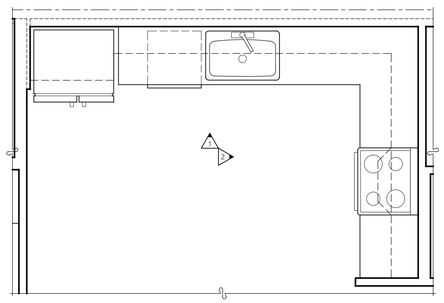

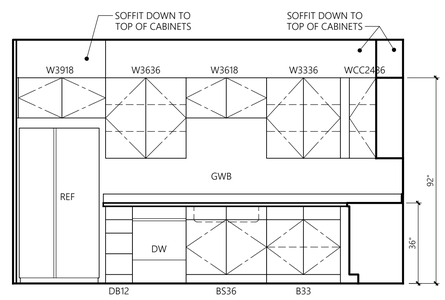

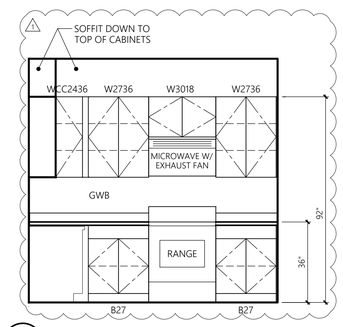

2-BED & 2-BED-ALT

3/8" = 1'-0"

NON-ACCESSIBLE KITCHEN PLAN (1) KITCHEN (2) KITCHEN

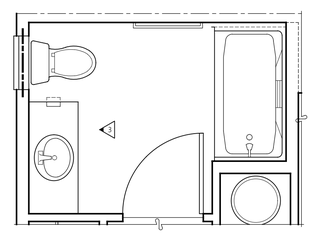

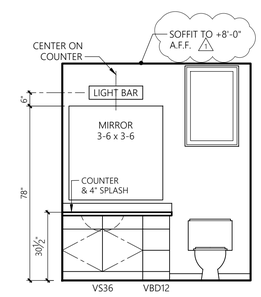

2-BED & 2-BED-ALT

3/8" = 1'-0"

NON-ACCESSIBLE M. BATH PLAN (3) MAIN BATH

*SEE SHEET U11 & U11.1 FOR ADDITIONAL ACCESSIBILITY STANDARDS

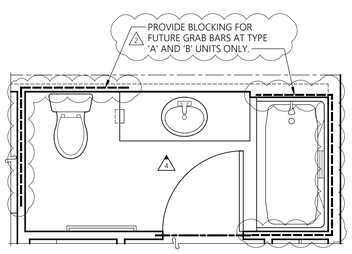

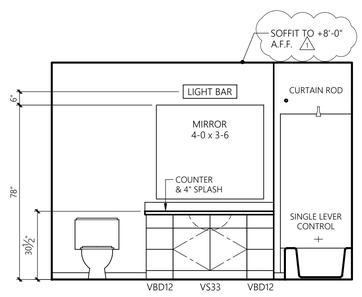

2-BED & 2-BED-ALT

3/8" = 1'-0"

TYPE 'A' & 'B' & NON-ACCESSIBLE SECONDARY BATH PLAN (4) SECONDARY BATH

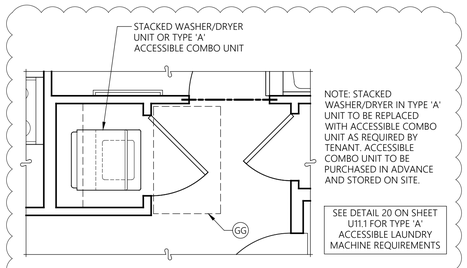

NOTE: STACKED WASHER/DRYER IN TYPE 'A' UNIT TO BE REPLACED WITH ACCESSIBLE COMBO UNIT AS REQUIRED BY TENANT. ACCESSIBLE COMBO UNIT TO BE PURCHASED IN ADVANCE AND STORED ON SITE.

SEE DETAIL 20 ON SHEET U11.1 FOR TYPE 'A' ACCESSIBLE LAUNDRY MACHINE REQUIREMENTS

2-BED & 2-BED-ALT

3/8" = 1'-0"

TYPE 'A' & 'B' LAUNDRY PLAN

CLEAR FLOOR SPACE LEGEND
TYPE A UNIT

A	60x66 CLEAR FLOOR SPACE AT TOILET.
B	30x60 CLEAR FLOOR SPACE AT TUB.
C	30"x48" CLEAR FLOOR SPACE CENTERED ON SINK
D	60" DIAMETER TURNING CIRCLE OR T-SHAPE TURNING SPACE
AA	30x48 CLEAR FLOOR SPACE AT STOVE.
BB	30x48 CLEAR FLOOR SPACE AT OVEN.
CC	30x48 CLEAR FLOOR SPACE AT SINK.
DD	30x48 CLEAR FLOOR SPACE AT DISHWASHER.
EE	30x48 CLEAR FLOOR SPACE AT REFRIGERATOR.
FF	30x48 CLEAR FLOOR SPACE AT WORK SURFACE.
GG	30x48 CLEAR FLOOR SPACE AT WASHER/DRYER

CLEAR FLOOR SPACE LEGEND
TYPE B UNIT

A	48x56 CLEAR FLOOR SPACE AT TOILET.
B	30x48 CLEAR FLOOR SPACE AT TUB.
C	30"x48" CLEAR FLOOR SPACE CENTERED ON SINK
D	30"x48" CLEAR FLOOR SPACE BEYOND ARC OF DOOR.
AA	30x48 CLEAR FLOOR SPACE AT STOVE.
BB	30x48 CLEAR FLOOR SPACE AT OVEN.
CC	30x48 CLEAR FLOOR SPACE AT SINK.
DD	30x48 CLEAR FLOOR SPACE AT DISHWASHER.
EE	30x48 CLEAR FLOOR SPACE AT REFRIGERATOR.
GG	30x48 CLEAR FLOOR SPACE AT WASHER/DRYER

City of Puyallup
Innovation & Permitting Services
REVIEW STAMP
Building | Planning
Engineering | Public Works
Fire | Parks

MILBRANDT ARCHITECTS

25 Central Way, Suite 210
Kirkland, Washington 98033
P: 425.454.7130 F: 425.658.1208
Web: www.milbrandtarch.com

© Copyright 2023
Milbrandt Architects, INC., P.S.
All rights reserved

11063 REGISTERED ARCHITECT
ANNA P. THOMPSON
STATE OF WASHINGTON

Interior Elevations

2-Bed & 2-Bed-Alt

Bradley Heights Apartments

Puyallup, Wa

Timberlane Partners

Revisions

No.	Date	Description
1	8-30-24	Owner Changes/ Permit Corrections

PRMU20240279

Initial Publish Date:

Date Plotted: 5-1-25

Job No.: 23-06

Drawn By: APT/HDM/TMK

Sheet No.: U9 1

F:\23060\INTERIOR ELEVATIONS.DWG

NUMBER OF TYPE A UNITS

IN GROUP R-2 OCCUPANCIES CONTAINING MORE THAN 10 DWELLING UNITS OR SLEEPING UNITS AT LEAST 5% BUT NOT LESS THAN ONE OF THE UNITS SHALL BE A TYPE A UNIT. ALL UNITS ON THE SITE SHALL BE CONSIDERED TO DETERMINE THE TOTAL NUMBER OF UNITS AND THE REQUIRED NUMBER OF **TYPE A** UNITS. EXISTING STRUCTURES ON A SITE SHALL NOT CONTRIBUTE TO THE TOTAL NUMBER OF UNITS ON A SITE. **TYPE A** UNITS SHALL BE DISPERSED AMONG THE VARIOUS CLASSES OF UNITS. THE NUMBER OF **TYPE A** UNITS IS PERMITTED TO BE REDUCED IN ACCORDANCE WITH CONDITIONS DEFINED IN SECTION 1107.7 OF THE IBC.

ACCESSIBLE ROUTE

AT LEAST ONE ACCESSIBLE ROUTE SHALL CONNECT ALL SPACES AND ELEMENTS THAT ARE PART OF THE UNIT. ACCESSIBLE ROUTES SHALL COINCIDE WITH OR BE LOCATED IN THE SAME AREA AS THE GENERAL CIRCULATION PATH. **(See detail 5 sheet A3)**

TURNING SPACE & CLEAR FLOOR SPACE

ALL ROOMS SERVED BY AN ACCESSIBLE ROUTE SHALL PROVIDE A TURNING SPACE EXCEPT FOR BATHROOMS THAT ARE NOT REQUIRED TO MEET ACCESSIBILITY STANDARDS, OR CLOSETS OR PANTRIES THAT ARE 48" MAX IN DEPTH. **(See detail 1 sheet A3)**

NOTE: BALCONIES AND CORRIDORS ARE NOT ROOMS AND AS SUCH DO NOT NEED TO HAVE A TURNING SPACE

DOORS AND DOORWAYS

THE PRIMARY ENTRANCE DOOR AND ALL DOORS INTENDED FOR USER PASSAGE, SHALL COMPLY WITH SECTION 404. **(See detail 6 sheet A3)**

BALCONY DOORS: THRESHOLDS AT EXTERIOR SLIDING DOORS SHALL BE PERMITTED TO BE ¾" MAX. IN HEIGHT PROVIDED THEY ARE BEVELED WITH A MAX. SLOPE OF 1:2.
WHERE EXTERIOR SPACE DIMENSIONS OF BALCONIES ARE LESS THAN THE REQUIRED MANEUVERING CLEARANCE, DOOR MANEUVERING CLEARANCES ARE NOT REQUIRED ON THE EXTERIOR SIDE OF THE DOOR.

BATHROOM DOORS: BATHROOMS NOT REQUIRED TO BE ACCESSIBLE ONLY NEED TO PROVIDE DOOR MANEUVERING CLEARANCE ON THE OUTSIDE OF THE DOOR.
BATHROOM DOORS MAY SWING INTO THE BATHROOM AND INTO THE REQUIRED CLEAR FLOOR SPACE AT ANY FIXTURE WHEN A CLEAR FLOOR SPACE OF AT LEAST 30"x48" IS PROVIDED WITHIN THE ROOM BEYOND THE ARC OF THE DOOR SWING.

OPERABLE PARTS

LIGHTING CONTROLS, ELECTRICAL PANELBOARDS, ELECTRICAL SWITCHES & RECEPTACLE OUTLETS, ENVIRONMENTAL CONTROLS, APPLIANCE CONTROLS, OPERATING HARDWARE FOR OPERABLE WINDOWS, PLUMBING FIXTURE CONTROLS, AND USER CONTROLS FOR SECURITY OR INTERCOM SYSTEMS SHALL COMPLY WITH SECTION 309. **(See detail 4 sheet A3)**

EXCEPTIONS:
1. Receptacle outlets serving a dedicated use.
2. Where two or more receptacle outlets are provided in a kitchen above a counter top that is uninterrupted by a sink or appliance, one receptacle outlet shall not be required to comply with Section 309.
3. Floor receptacle outlets.
4. HVAC diffusers.
5. Controls mounted on ceiling fans.
6. Where redundant controls other than light switches are provided for a single element, one control shall not be required to be accessible.
7. Reset buttons & shut-offs serving appliances, piping & plumbing fixtures.
8. Electrical panelboards shall not be required to comply with Section 309.4.

WINDOWS

ONLY WINDOWS REQUIRED TO BE OPERABLE FOR NATURAL VENTILATION OR TO PROVIDE AN EMERGENCY ESCAPE AND RESCUE OPENING NEED TO HAVE OPERABLE PARTS COMPLYING WITH SECTION 309. **(See detail 4 sheet A3)**

LAUNDRY EQUIPMENT

WASHING MACHINES AND CLOTHES DRYERS SHALL COMPLY WITH SECTION 611. **(See detail 20 sheet U11.1)**

TOILET AND BATHING FACILITIES

AT LEAST ONE TOILET AND BATHING FACILITY SHALL CONTAIN: ONE LAVATORY, ONE WATER CLOSET AND EITHER A BATHTUB OR SHOWER WITHIN THE UNIT THAT MEETS THE REQUIREMENTS DETAILED FOR **TYPE A** FIXTURES **(See details 23 thru 28 this sheet).** THE ACCESSIBLE TOILET AND BATHING FIXTURES SHALL BE IN A SINGLE TOILET/BATHING AREA SUCH THAT TRAVEL BETWEEN FIXTURES DOES NOT REQUIRE TRAVEL THROUGH OTHER PARTS OF THE UNIT.

ALL TOILET & BATHING FACILITIES WITHIN A **TYPE A** UNIT SHALL PROVIDE REINFORCEMENT FOR THE **FUTURE INSTALLATION** OF GRAB BARS AT WATER CLOSETS, BATHTUBS AND SHOWER SEATS. REINFORCEMENT IS NOT REQUIRED IN A ROOM CONTAINING ONLY A LAVATORY AND A WATER CLOSET, PROVIDED THE ROOM DOES NOT CONTAIN THE ONLY LAVATORY OR WATER CLOSET ON THE ACCESSIBLE LEVEL OF THE DWELLING UNIT.

ALARMS

ACCESSIBLE AUDIBLE AND VISIBLE ALARMS AND NOTIFICATION APPLIANCES SHALL BE INSTALLED IN ACCORDANCE WITH NFPA 72 LISTED IN SECTION 105.2.2, BE POWERED BY A COMMERCIAL LIGHT AND POWER SOUCE, BE PERMANENTLY CONNECTED TO THE WIRING OF THE PREMISES ELECTRIC SYSTEM, AND BE PERMANENTLY INSTALLED.

VISIBLE NOTIFICATION APPLIANCES

IN GROUP R-2 OCCUPANCIES REQUIRED TO HAVE A FIRE ALARM SYSTEM, EACH STORY THAT CONTAINS DWELLING UNITS & SLEEPING UNITS SHALL BE PROVIDED WITH THE CAPABILITY TO SUPPORT VISIBLE ALARM NOTIFICATION APPLIANCES. SUCH CAPABILITY SHALL ACCOMMODATE WIRED OR WIRELESS EQUIPMENT. THE FUTURE CAPABILITY SHALL INCLUDE ONE OF THE FOLLOWING:
1. The interconnection of the building fire alarm system with the unit smoke alarms.
2. Replacement of audible appliances with combination audible/visible appliances.
3. The future extension of the existing wiring from the unit smoke alarm location to required locations for visible appliances.

VISIBLE NOTIFICATION APPLIANCES, WHERE PROVIDED AS PART OF THE UNIT SMOKE DETECTION SYSTEM OR BUILDING FIRE ALARM SYSTEM, SHALL BE ACTIVATED UPON SMOKE DETECTION OR WITH ACTIVATION OF THE BUILDING FIRE ALARM. THE SAME VISIBLE NOTIFICATION APPLIANCE CAN BE USED FOR BOTH SMOKE DETECTION AND FIRE ALARM ACTIVATION, BUT SHALL NOT BE USED FOR ANY OTHER PURPOSE WITHIN THE UNIT.

UNIT PRIMARY ENTRANCE

THE ACCESSIBLE PRIMARY ENTRANCE SHALL BE ON AN ACCESSIBLE ROUTE FROM PUBLIC AND COMMON AREAS.

COMMUNICATION FEATURES SHALL BE PROVIDED AT THE UNIT PRIMARY ENTRANCE. A HARD-WIRED ELECTRIC DOORBELL SHALL BE PROVIDED. A BUTTON OR SWITCH SHALL BE PROVIDED ON THE PUBLIC SIDE OF THE UNIT PRIMARY ENTRANCE.
WHERE A SYSTEM PERMITTING VOICE COMMUNICATION BETWEEN A VISITOR AND THE OCCUPANT OF THE UNIT IS PROVIDED AT A LOCATION OTHER THAN THE UNIT ENTRY DOOR, THE SYSTEM SHALL INCLUDE THE CAPABILITY OF SUPPORTING VOICE AND TTY COMMUNICATION WITH THE UNIT INTERFACE.

A MEANS FOR VISUALLY IDENTIFYING A VISITOR WITHOUT OPENING THE UNIT ENTRY DOOR SHALL BE PROVIDED. PEEPHOLES, WHERE USED SHALL PROVIDE A MINIMUM 180-DEGREE RANGE OF VIEW. PEEPHOLES SHALL BE PLACED AT A STANDARD HEIGHT FOR BOTH STANDING PERSONS AND WHEELCHAIR USERS. **(See detail 32 this sheet)**

23 GENERAL **TYPE A** UNIT NOTES

NTS

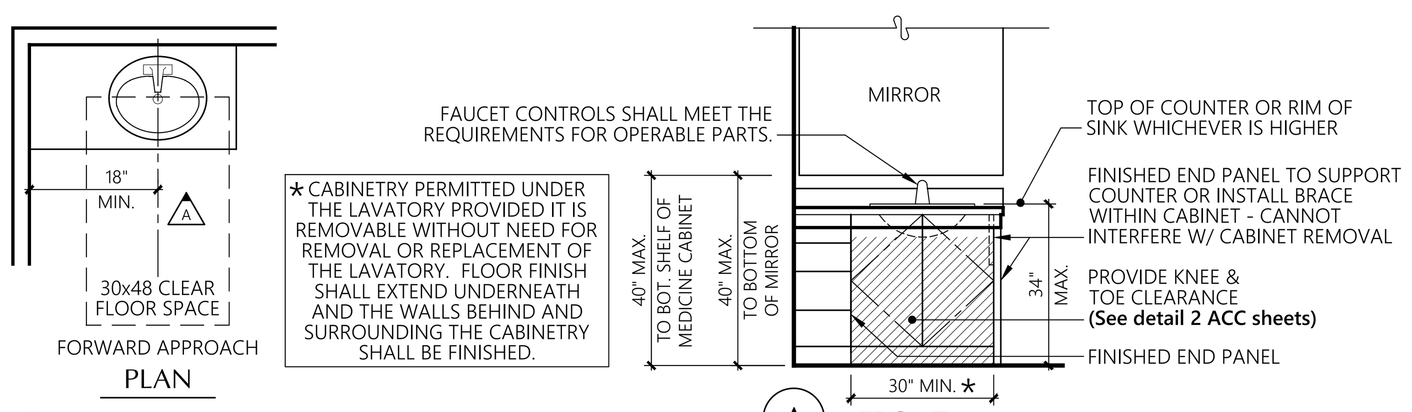

24 LAVATORY

3/8"=1'-0"

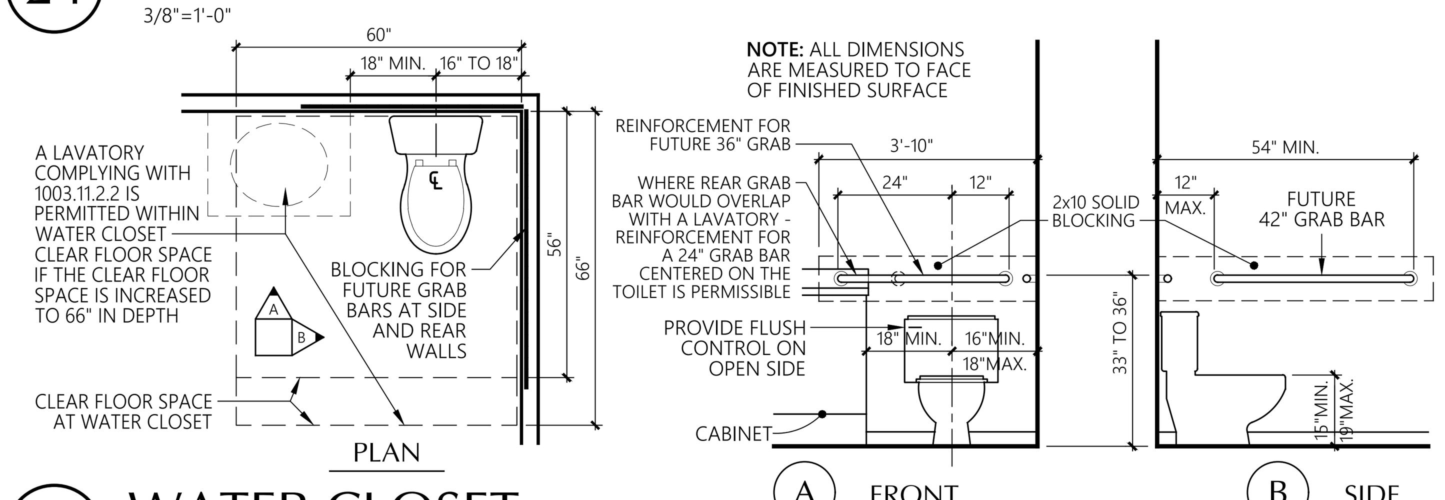

25 WATER CLOSET

3/8"=1'-0"

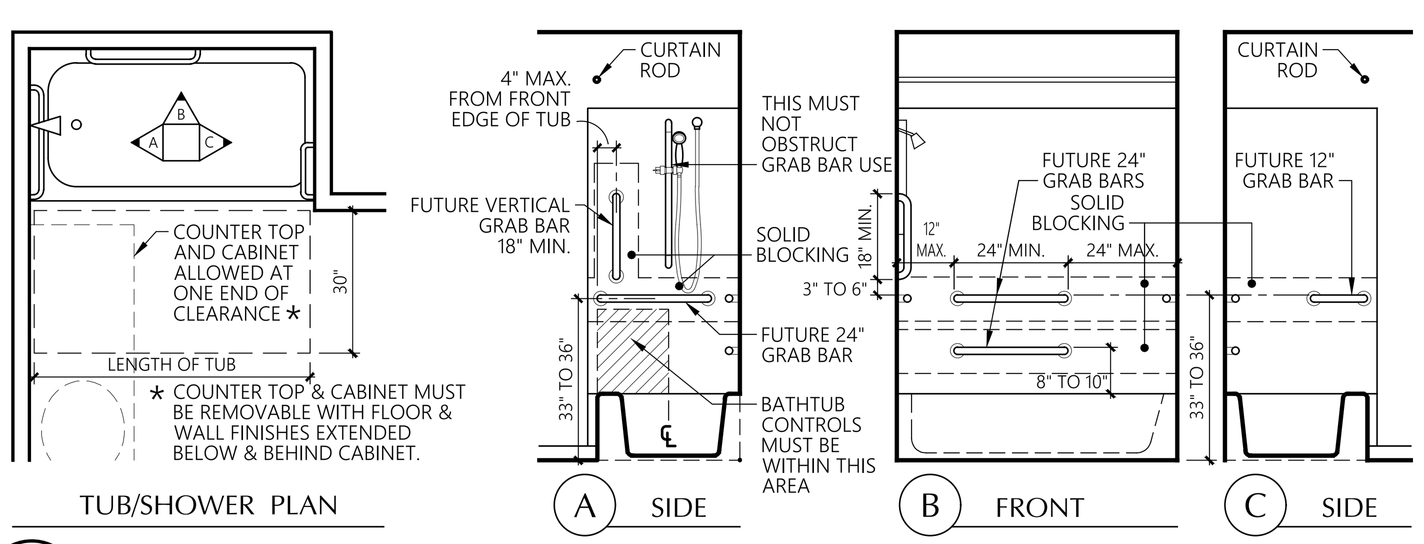

26 BATHTUB & TUB / SHOWER COMBO

3/8"=1'-0"

TYPE A DWELLING UNITS

CHAPTER 10 SECTION 1003

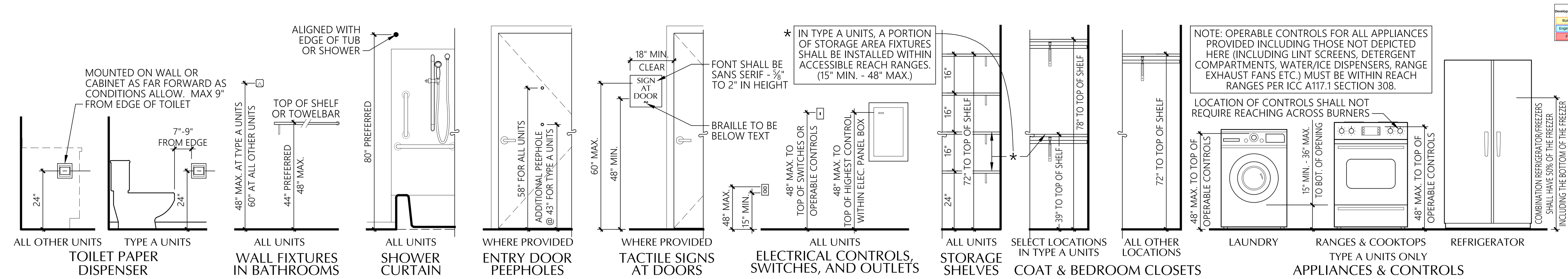

32 TYPICAL ACCESSORY & FIXTURE MOUNTING HEIGHTS

3/8"=1'-0"

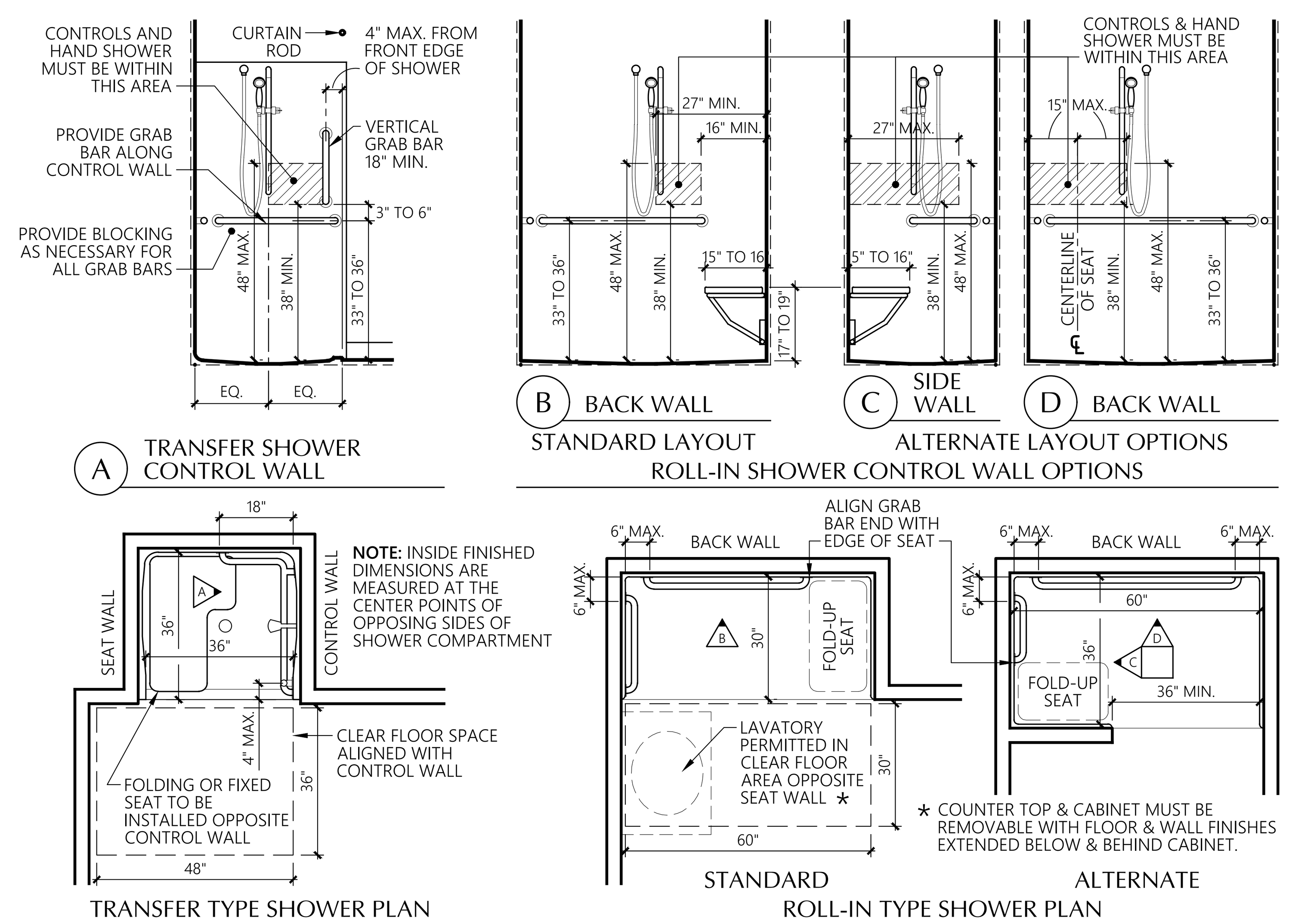

27 SHOWER COMPARTMENTS

3/8"=1'-0"

SINK

A SINK AT 34" MAX. HEIGHT WITH CLEAR FLOOR SPACE SHALL BE PROVIDED FOR A FORWARD APPROACH (NOT NECESSARILY CENTERED ON THE SINK) WITH KNEE AND TOE CLEARANCE. NOTE: THE KNEE & TOE CLEARANCE ONLY NEEDS TO APPLY TO ONE BOWL OF A MULTI-BOWL SINK.

CABINETRY SHALL BE PERMITTED UNDER THE SINK PROVIDED IT IS REMOVABLE AND THE FLOOR AN WALL FINISH IS EXTENDED UNDER AND BEHIND THE REMOVABLE CABINETS.

WORK SURFACE

AT LEAST ONE SECTION OF COUNTER SHALL PROVIDE A WORK SURFACE 30" MIN. IN LENGTH AND 34" MAX. IN HEIGHT. PROVIDE A CLEAR FLOOR SPACE FOR A FORWARD APPROACH WITH KNEE AND TOE CLEARANCE.

CABINETRY SHALL BE PERMITTED UNDER THE WORK SURFACE PROVIDED IT IS REMOVABLE AND THE FLOOR AN WALL FINISH IS EXTENDED UNDER AND BEHIND THE REMOVABLE CABINETS.

APPLIANCES

DISHWASHER: A CLEAR FLOOR SPACE SHALL BE POSITIONED ADJACENT TO THE DISHWASHER DOOR SO THAT THE DOOR IN THE OPEN POSITION DOESN'T OBSTRUCT THE CLEAR FLOOR SPACE.

COOKTOP: A CLEAR FLOOR SPACE SHALL BE PROVIDED FOR A PARALLEL APPROACH CENTERED ON THE APPLIANCE. THE LOCATION OF CONTROLS SHALL NOT REQUIRE REACHING ACROSS BURNERS.

OVEN: A CLEAR FLOOR SPACE SHALL BE POSITIONED ADJACENT TO THE OVEN DOOR SUCH THAT THE DOOR IN THE OPEN POSITION DOES NOT OBSTRUCT THE CLEAR FLOOR SPACE. A COUNTERTOP SHALL BE LOCATED ADJACENT TO ONE SIDE OF THE OVEN. THE LOCATION OF CONTROLS SHALL NOT REQUIRE REACHING ACROSS BURNERS.

REFRIGERATOR/FREEZER: A CLEAR FLOOR SPACE SHALL BE PROVIDED FOR A PARALLEL APPROACH OFFSET 24" MAX. FROM THE CENTERLINE OF THE APPLIANCE. COMBINATION REFRIGERATORS AND FREEZERS SHALL HAVE AT LEAST 50% OF THE FREEZER COMPARTMENT SHELVES INCLUDING THE BOTTOM OF THE FREEZER 54" MAX. ABOVE THE FLOOR WHEN THE SHELVES ARE INSTALLED AT THE MAX. HEIGHT POSSIBLE IN THE COMPARTMENT.

MINIMUM CLEARANCES

CLEARANCE BETWEEN OPPOSING BASE CABINETS, COUNTER TOPS, APPLIANCES, OR WALLS IN KITCHEN WORK AREAS SHALL BE 40" MIN. OR 60" MIN. AT U-SHAPED KITCHENS.

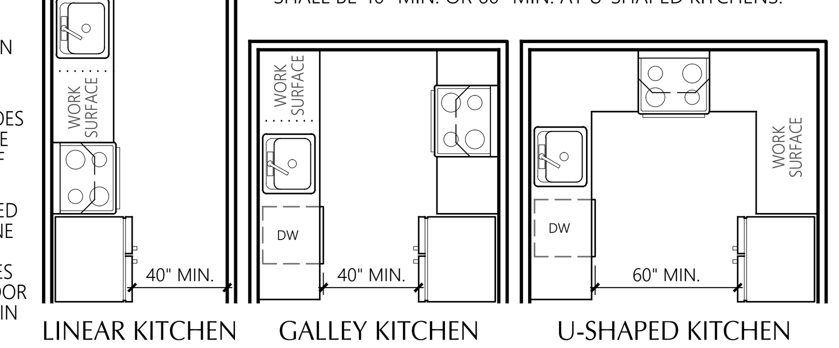

ADJUSTABLE COUNTERTOP ALTERNATIVE

AS AN ALTERNATIVE TO 34" HIGH COUNTERTOPS FOR WORK SURFACE AND SINK, A SINK AND COUNTER THAT IS ADJUSTABLE TO VARIABLE HEIGHTS 29" MIN. AND 36" MAX. OR THAT CAN BE RELOCATED WITHIN THAT RANGE WITHOUT CUTTING THE COUNTER OR DAMAGING ADJACENT CABINETS, WALLS, DOORS AND STRUCTURAL ELEMENTS IS PERMITTED, PROVIDED ROUGH-IN PLUMBING PERMITS CONNECTIONS OF SUPPLY AND DRAIN PIPES FOR SINKS MOUNTED AT THE HEIGHT OF 29".

★★ NOTE: THE 30" WIDE CLEARANCE FOR FORWARD APPROACH AND KNEE CLEARANCE DOES NOT NEED TO BE CENTERED ON THE SINK. IF IT IS PROVIDED AT ONLY ONE BOWL OF A MULTI-BOWL SINK, ENSURE THE 30" CLEARANCE IS PROVIDED UNDER THE BOWL AND TO THE SIDE ADJACENT TO THE BOWL.

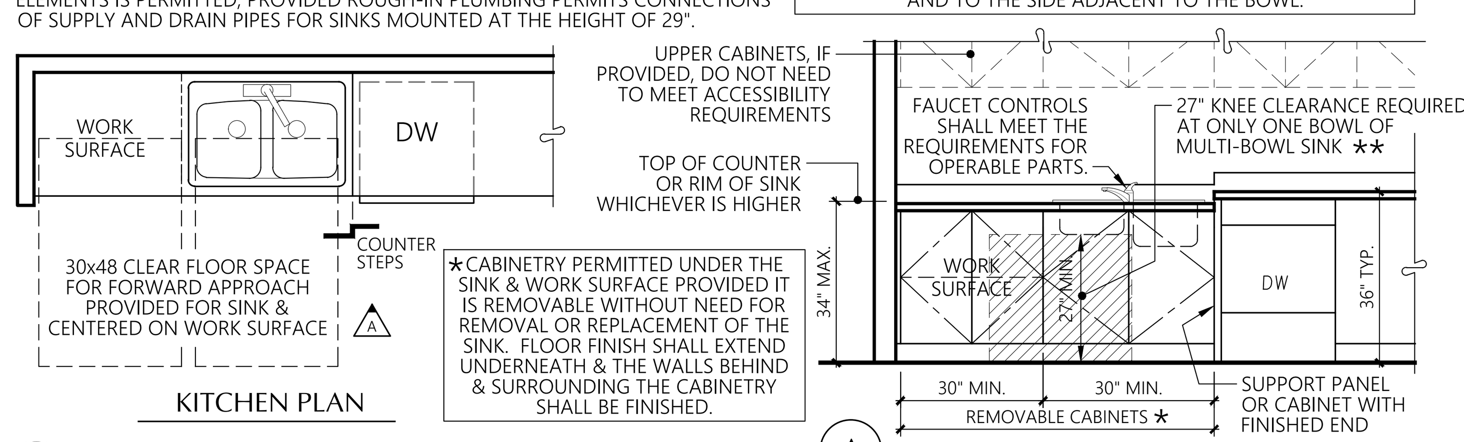

28 KITCHENS & KITCHENETTES

3/8"=1'-0"

NUMBER OF TYPE B UNITS

IN GROUP R-2 OCCUPANCIES WHERE THERE ARE 4 OR MORE DWELLING UNITS OR SLEEPING UNITS INTENDED TO BE OCCUPIED AS A RESIDENCE IN A SINGLE STRUCTURE, EVERY DWELLING UNIT AND SLEEPING UNIT SHALL BE A **TYPE B** UNIT. THE NUMBER OF **TYPE B** UNITS IS PERMITTED TO BE REDUCED IN ACCORDANCE WITH CONDITIONS DEFINED IN SECTION 1107.7 OF THE IBC. THIS REDUCTION OF **TYPE B** UNITS IS TYPICALLY FOR UNITS THAT ARE ON UPPER STORIES OF A MULTISTORY BUILDING WITHOUT ELEVATOR SERVICE OR MULTI-STORY DWELLING UNITS (SEE IBC FOR SPECIFIC CONDITIONS ALLOWING REDUCTION OF **TYPE B** UNITS).

UNIT PRIMARY ENTRANCE

SAME REQUIREMENTS AS FOR **TYPE A** UNITS EXCEPT THAT ONLY A SINGLE PEEPHOLE NEED BE PROVIDED AT A STANDARD HEIGHT FOR STANDING PERSONS.

ACCESSIBLE ROUTE

SAME REQUIREMENTS AS FOR **TYPE A** UNITS EXCEPT YOU ARE PERMITTED TO HAVE ONE OF THE FOLLOWING: A RAISED / SUNKEN FLOOR AREA IN A LIVING, DINING OR SLEEPING ROOM OR A MEZZANINE THAT IS NOT ENCLOSED AND DOES NOT HAVE PLUMBING FIXTURES.

CHANGES IN LEVEL

SAME REQUIREMENTS AS FOR **TYPE A** UNITS EXCEPT WHERE EXTERIOR DECK, PATIO OR BALCONY SURFACE MATERIALS ARE IMPERVIOUS, THE IMPERVIOUS SURFACE SHALL BE 4" MAX. BELOW THE INTERIOR FLOOR LEVEL.

DOORS

SAME REQUIREMENTS AS FOR **TYPE A** UNITS EXCEPT DOORS INTENDED FOR USER PASSAGE SHALL HAVE A CLEAR OPENING WIDTH OF 31¾" MIN. MEASURED BETWEEN THE FACE OF THE DOOR & THE STOP WITH THE DOOR OPENED 90°.

BATHROOM DOORS: BATHROOM DOORS MAY SWING INTO THE REQUIRED CLEAR FLOOR SPACE AT ANY FIXTURE WHEN A CLEAR FLOOR SPACE OF AT LEAST 30"x48" IS PROVIDED WITHIN THE ROOM BEYOND THE ARC OF THE DOOR SWING.

OPERABLE PARTS

SAME REQUIREMENTS AS FOR **TYPE A** UNITS EXCEPT FOR THESE ADDITIONAL EXCEPTIONS:

6. Controls or switches mounted on appliances.
7. Plumbing fixture controls.
10. Within kitchens & bathrooms, lighting controls, electrical switches & receptacle outlets are permitted to be located over cabinets with countertops 36" max. in height & 25½" max. in depth.

LAUNDRY EQUIPMENT

A 30"x48" CLEAR FLOOR SPACE SHALL BE PROVIDED. A PARALLEL APPROACH SHALL BE PROVIDED FOR TOP LOADING MACHINES. A FORWARD OR PARALLEL APPROACH SHALL BE PROVIDED FOR FRONT LOADING MACHINES.

TOILET AND BATHING FACILITIES

REINFORCEMENT FOR FUTURE GRAB BAR INSTALLATION SHALL BE PROVIDED FOR **ALL** TOILET & BATHING FACILITIES (Regardless of the option chosen for the fixture clearances). REINFORCEMENT SHALL BE THE SAME AS FOR **TYPE A** UNITS (See detail 23 this sheet) EXCEPT REINFORCEMENT IS NOT REQUIRED FOR SHOWER SEATS IN SHOWERS THAT ARE LARGER THAN 36"x36" AND REINFORCEMENT AT WATER CLOSETS CAN BE MODIFIED FOR ALTERNATE GRAB BAR CONFIGURATIONS DETAILED BELOW.

GRAB BAR ALTERNATIVES

WHERE SPACE AT THE REAR WALL DOES NOT PERMIT A 36" GRAB BAR, REINFORCEMENT FOR FUTURE INSTALLMENT OF A 24" GRAB BAR IS PERMITTED CENTERED ON THE TOILET.

WHERE SPACE AT THE SIDE WALL DOES NOT PERMIT A 42" GRAB BAR, REINFORCEMENT FOR FUTURE INSTALLMENT OF A 24" GRAB BAR IS PERMITTED SPACED 12" FROM THE REAR.

WHERE A SIDE WALL IS NOT AVAILABLE, REINFORCEMENT SHALL BE PROVIDED FOR THE FUTURE INSTALLMENT OF A SWING-UP GRAB BAR AS SHOWN ON THE PLAN AT RIGHT.

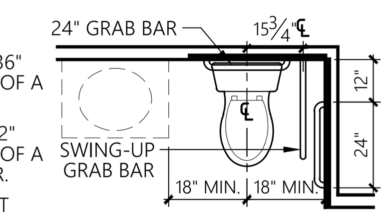

REINFORCING FOR ALTERNATE GRAB BAR CONFIGURATIONS

29 GENERAL **TYPE B** UNIT NOTES

1/4"=1'-0"

WITH TOILET AND BATHING AREAS WITHIN **TYPE B** UNITS EITHER **ALL** TOILET AND BATHING AREAS PROVIDED SHALL COMPLY WITH OPTION A OR **ONE** TOILET AND BATHING AREA SHALL COMPLY WITH OPTION B.

OPTION A EVERY FIXTURE PROVIDED IN **ALL TOILET AND BATHING AREAS** SHALL COMPLY WITH THE REQUIREMENTS LISTED.

OPTION B ONE OF EACH TYPE OF FIXTURE PROVIDED SHALL COMPLY WITH THE FOLLOWING REQUIREMENTS AND BE LOCATED IN A **SINGLE TOILET/BATHING AREA**.

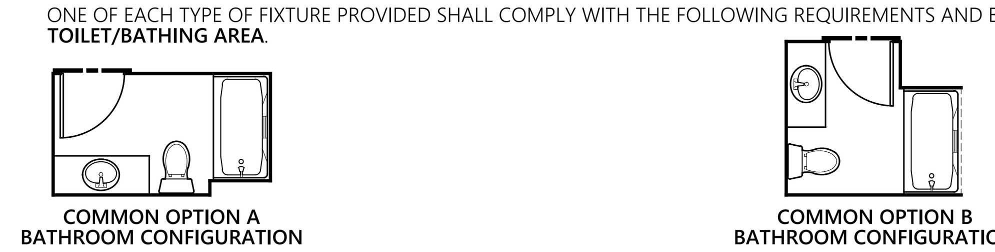

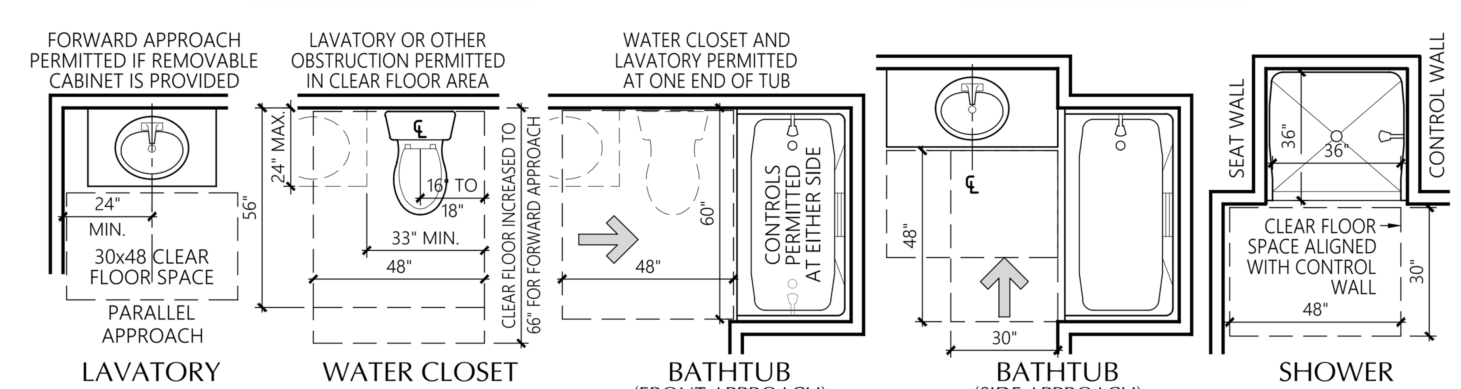

OPTION A FIXTURE REQUIREMENTS

LAVATORY: SAME REQUIREMENTS AS FOR OPTION A EXCEPT THAT THE HEIGHT OF THE LAVATORY SHALL BE 34" MAX. ABOVE THE FLOOR.

WATER CLOSET: SAME REQUIREMENTS AS FOR OPTION A.

BATHING FIXTURES: THE ACCESSIBLE BATHING FIXTURE SHALL BE A BATHTUB WITH A CLEARANCE OF 30"x48" ALIGNED WITH THE CONTROL END OF THE TUB OR A SHOWER COMPARTMENT WITH THE SAME REQUIREMENTS AS THE OPTION A SHOWER.

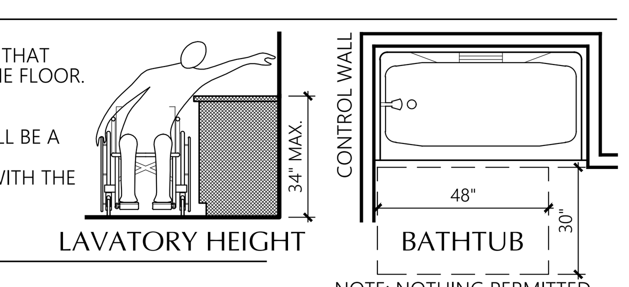

OPTION B FIXTURE REQUIREMENTS

NOTE: NOTHING PERMITTED WITHIN FIXTURE CLEARANCE

30 TYPE B - TOILET & BATHING FIXTURES

1/4"=1'-0"

MINIMUM CLEARANCES

CLEARANCE BETWEEN ALL OPPOSING BASE CABINETS, COUNTER TOPS, APPLIANCES, OR WALLS WITHIN KITCHEN WORK AREAS SHALL BE 40" MIN. OR 60" MIN. AT U-SHAPED KITCHENS. SEE MINIMUM CLEARANCE DIAGRAMS FOR **TYPE A** UNITS (Detail 28 this sheet).

APPLIANCES

SINK: A CLEAR FLOOR SPACE OF 30"x48" POSITIONED FOR A PARALLEL APPROACH SHALL BE PROVIDED CENTERED ON THE SINK BOWL.
NOTE: ON A MULTI-BOWL SINK THE CLEAR FLOOR SPACE SHALL BE CENTERED ON THE WHOLE SINK PLUMBING FIXTURE.

DISHWASHER: A CLEAR FLOOR SPACE SHALL BE POSITIONED ADJACENT TO THE DISHWASHER DOOR SUCH THAT THE DOOR IN THE OPEN POSITION DOES NOT OBSTRUCT THE CLEAR FLOOR SPACE.

COOKTOP: A CLEAR FLOOR SPACE SHALL BE PROVIDED FOR A PARALLEL APPROACH CENTERED ON THE APPLIANCE.

OVEN: A CLEAR FLOOR SPACE SHALL BE POSITIONED ADJACENT TO THE OVEN DOOR SUCH THAT THE DOOR IN THE OPEN POSITION DOES NOT OBSTRUCT THE CLEAR FLOOR SPACE.

REFRIGERATOR/FREEZER: A CLEAR FLOOR SPACE SHALL BE PROVIDED FOR A PARALLEL APPROACH OFFSET 24" MAX. FROM THE CENTERLINE OF THE APPLIANCE.

TRASH COMPACTOR: A CLEAR FLOOR SPACE POSITIONED FOR A PARALLEL OR FORWARD APPROACH SHALL BE PROVIDED.

31 KITCHENS AND KITCHENETTES

3/8"=1'-0"

TYPE B DWELLING UNITS

CHAPTER 10 SECTION 1004

MILBRANDT ARCHITECTS

25 Central Way, Suite 210
Kirkland, Washington 98033
P: 425.454.7130 F: 425.658.1208
Web: www.milbrandtarch.com

© Copyright 2023
Milbrandt Architects, INC., P.S.
All rights reserved

11063 REGISTERED ARCHITECT
ANNA P. THOMPSON
STATE OF WASHINGTON

Accessibility Standards

Bradley Heights Apartments

Puyallup, Wa

Timberlane Partners

Revisions

No.	Date	Description
1	8-30-24	Owner Changes/ Permit Corrections

PRMU20240279

Initial Publish Date:

Date Plotted: 5-1-25

Job No.: 23-06

Drawn By: APT/HDM/TMK

Sheet No.: U11

H: \2306\INTERIOR ELEVATIONS.DWG

WASHING MACHINES AND CLOTHES DRYERS

CLEAR FLOOR SPACE: A 30"X48" CLEAR FLOOR SPACE FOR A PARALLEL APPROACH SHALL BE PROVIDED. FOR TOP LOADING MACHINES, THE CLEAR FLOOR SPACE SHALL BE CENTERED ON THE APPLIANCE. FOR FRONT LOADING MACHINES, THE CENTERLINE OF THE CLEAR FLOOR SPACE SHALL BE OFFSET 24" MAX. FROM THE CENTERLINE OF THE DOOR OPENING.

OPERABLE PARTS: OPERABLE PARTS INCLUDING DOORS, LINT SCREENS, DETERGENT & BLEACH COMPARTMENTS, SHALL BE WITHIN ACCESSIBLE REACH RANGES & MEET THE REQUIREMENTS FOR OPERABLE PARTS. **(See detail 4 sheet A3 & 32 sheet U11)**

HEIGHT: TOP LOADING MACHINES SHALL HAVE THE DOOR TO THE LAUNDRY COMPARTMENT 36" MAX. ABOVE THE FLOOR. FRONT LOADING MACHINES SHALL HAVE THE BOTTOM OF THE OPENING TO THE LAUNDRY COMPARTMENT 15" MIN. & 36" MAX. ABOVE THE FLOOR

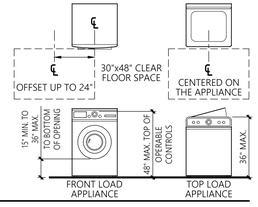

20 LAUNDRY FACILITIES

NTS

MILBRANDT ARCHITECTS

25 Central Way, Suite 210
Kirkland, Washington 98033
P: 425.454.7130 F: 425.658.1208
Web: www.milbrandtarch.com

© Copyright 2023
Milbrandt Architects, INC., P.S.
All rights reserved

11063 REGISTERED ARCHITECT
ANNA P. THOMPSON
STATE OF WASHINGTON

Accessibility Standards

Bradley Heights Apartments

Puyallup, Wa

Timberlane Partners

Revisions

No.	Date	Description
1	8-30-24	Owner Changes/ Permit Corrections

PRMU20240279

Initial Publish Date:

Date Plotted: 5-1-25

Job No.: 23-06

Drawn By: APT/HDM/TMK

Sheet No.: U11.1

H:\2306\INTERIOR ELEVATIONS.DWG

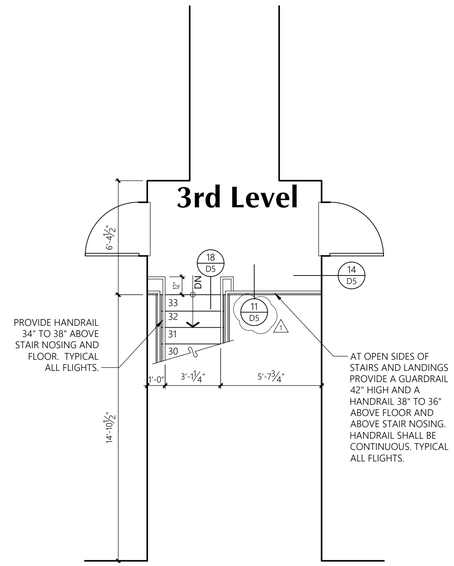

FLOOR TO FLOOR HEIGHT IS 10'-1 5/8".
18 EQUAL RISERS; RISER HEIGHT MAX. 7"
LANDING IS MIDWAY BETWEEN FLOORS

STAIR 1 3RD LEVEL FLOOR PLAN

1/4" = 1'-0"

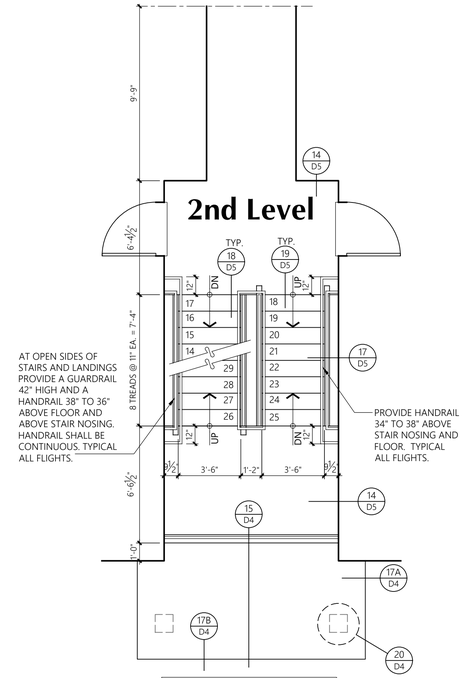

FLOOR TO FLOOR HEIGHT IS 10'-1 5/8".
18 EQUAL RISERS; RISER HEIGHT MAX. 7"
LANDING IS MIDWAY BETWEEN FLOORS

STAIR 1 2ND LEVEL FLOOR PLAN

1/4" = 1'-0"

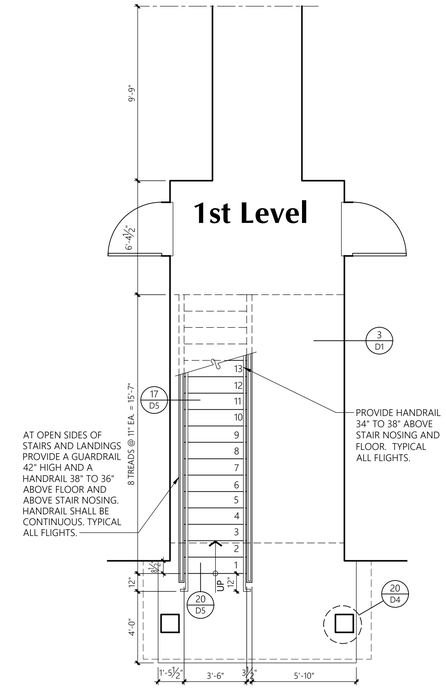

FLOOR TO FLOOR HEIGHT IS 10'-1 5/8".
18 EQUAL RISERS; RISER HEIGHT MAX. 7"
LANDING IS MIDWAY BETWEEN FLOORS

STAIR 1 1ST LEVEL FLOOR PLAN

1/4" = 1'-0"

MILBRANDT ARCHITECTS
25 Central Way, Suite 210
Kirkland, Washington 98033
P: 425.454.7130 F: 425.658.1208
Web: www.milbrandtarch.com

© Copyright 2023
Milbrandt Architects, INC., P.S.
All rights reserved

11063 REGISTERED ARCHITECT
ANNA P. THOMPSON
STATE OF WASHINGTON

Stair 1
Floor Plans

Bradley Heights Apartments
Puyallup, Wa

Timberlane Partners

Revisions

No.	Date	Description
1	8-30-24	Owner Changes/ Permit Corrections

PRMU20240279

Initial Publish Date:
Date Plotted: 5-1-25
Job No.: 23-06
Drawn By: APT/HDM/TMK
Sheet No.: U12

A:\23-06\STAIR.DWG

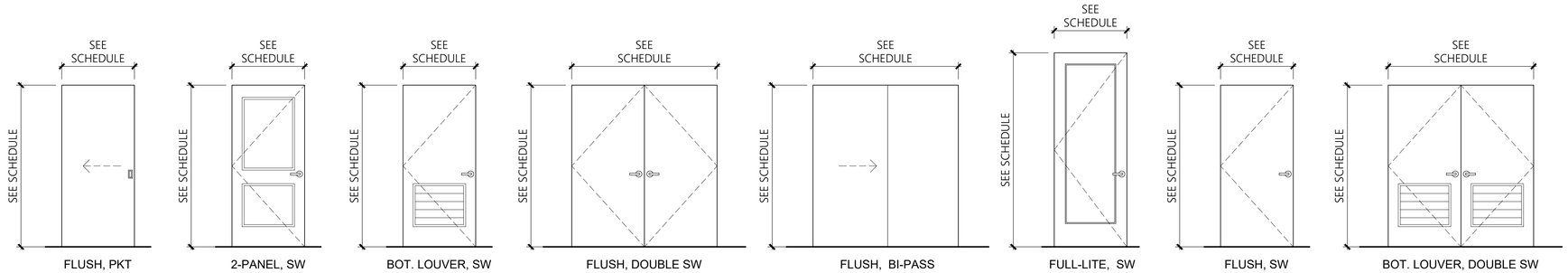

Door Schedule - Units

Door No.	Type	Size	Thickness	Construct	Finish	Fire Rating	Frame or Head/Jamb		Remarks	Min. U Factor	Max. SHGC
							Construct.	Finish			
1A	2-Panel, SW	3'-0" x 8'-0"	1-3/4"	INSUL MTL	PP	20 min.	Wood	PP	Keylock, Dead Bolt w/Thumb, Self Closure/Smoke Seal, Flush Threshold, Weatherstrip, Ext. Grade Door, Peep Sight, Self Closing	0.24	-
1B	2-Panel, SW	3'-0" x 8'-0"	1-3/4"	INSUL MTL	PP	90 min.	MTL 1	PP	Keylock, Dead Bolt w/Thumb, Self Closure/Smoke Seal, Flush Threshold, Weatherstrip, Ext. Grade Door, Peep Sight, Self Closing	0.24	-
2	2-Panel, PKT	3'-0" x 6'-8"	1-3/8"	HCW	PP		Wood	PP	Privacy Lock @ Bath	-	-
3	2-Panel, SW	3'-0" x 6'-8"	1-3/8"	HCW	PP		Wood	PP	Privacy Lock @ Bath	-	-
4	Bot. Louver Dbl, SW	6'-0" x 6'-8"	1-3/8"	HCW	PP		Wood	PP		-	-
5	Full-Lite, SW	3'-0" x 8'-0"	1-3/4"	INSUL FBGL 1	PP		Wood	PP	Keylock, Safety Glass, Flush Threshold, Weatherstrip, Ext. Grade Door	0.24	0.61
6	2-Panel, SW	2'-4" x 6'-8"	1-3/8"	HCW	PP		Wood	PP		-	-
7	2-Panel, SW	2'-6" x 6'-8"	1-3/8"	HCW	PP		Wood	PP		-	-
8	BP	4'-0" x 6'-8"	1-3/8"	HCW	PP		GWB	PP		-	-
9	Bot. Louver, SW	3'-0" x 6'-8"	1-3/8"	HCW	PP		Wood	PP		-	-
10	BP	5'-0" x 6'-8"	1-3/8"	HCW	PP		GWB	PP		-	-
11	2-Panel, SW	2'-0" x 6'-8"	1-3/8"	HCW	PP		Wood	PP		-	-
12	Flush, SW	3'-0" x 8'-0"	1-3/8"	MTL	PP	90 min.	Wood	PP	Lockable from outside, Ext. Grade Door	-	-
13	Flush, Dbl SW	6'-0" x 6'-8"	1-3/8"	INSUL MTL	PP		MTL	PP	Lockable from outside, Ext. Grade Door	0.24	-
14	Flush, SW	3'-0" x 8'-0"	1-3/8"	MTL	PP	20 min.	MTL 1	PP	Lockable from outside, Ext. Grade Door	-	-

DOOR KEY:

TYPE:
SCW = SOLID CORE WOOD
HCW = HOLLOW CORE WOOD
MTL = METAL
FBGL = FIBERGLASS
SW = SWING
DBL SW = DOUBLE SWING
SOHD = SECTIONAL OVERHEAD DOOR
PP = PRIME & PAINT
FF = FACTORY FINISH

1 SHEET ADDED

MILBRANDT ARCHITECTS
25 Central Way, Suite 210
Kirkland, Washington 98033
P: 425.454.7130 F: 425.658.1208
Web: www.milbrandtarch.com

© Copyright 2023
Milbrandt Architects, INC., P.S.
All rights reserved

11063 REGISTERED ARCHITECT
ANNA P. THOMPSON
STATE OF WASHINGTON

Door Schedule

Bradley Heights Apartments

Puyallup, Wa

Timberlane Partners

Revisions

No.	Date	Description
1	8-30-24	Owner Changes/ Permit Corrections

PRMU20240279

Initial Publish Date:
Date Plotted: 5-1-25
Job No.: 23-06
Drawn By: APT/HDM/TMK
Sheet No.: U14

H:\23065\INTERIOR ELEVATIONS.DWG

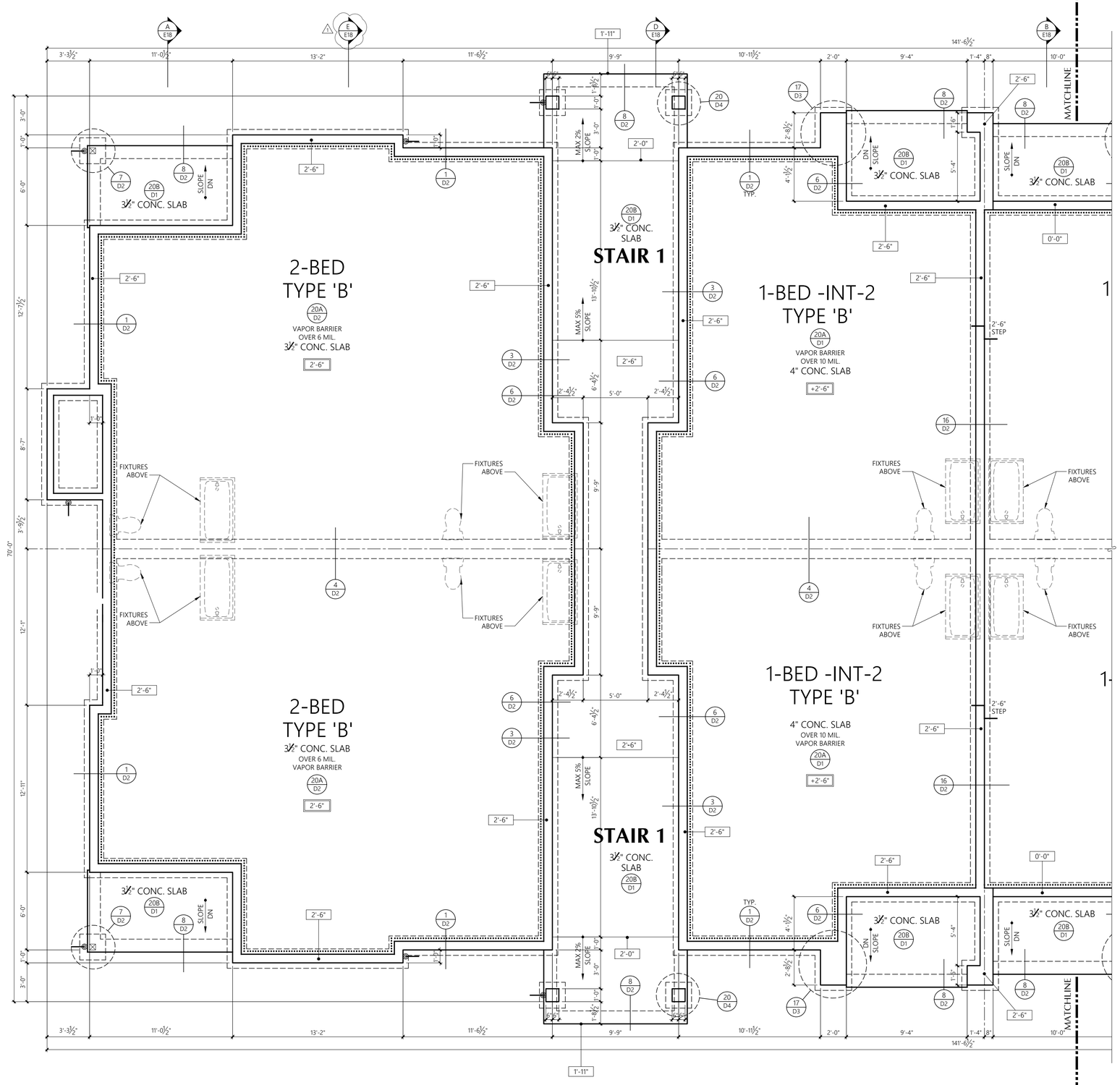

FOUNDATION NOTES

- LOCATION OF DOWNSPOUT: PROVIDE TIGHT LINE AND RISER BOOT
- X" ELEVATION AT TOP OF CONCRETE (TOP OF FOOTING MAY VARY BECAUSE OF EXCAVATION)
- +X'-X" FINISH SLAB ELEVATION
- R-10 RIGID PERIMETER INSULATION

BUILDING H

1/4" = 1'-0"

PARTIAL ARCHITECTURAL FOUNDATION PLAN

3 SPLIT LEVEL, 24-UNIT BUILDING

SEE S2.6 FOR STRUCTURAL FOUNDATION PLAN

H:\2306\BUILDING H.DWG

MILBRANDT ARCHITECTS

25 Central Way, Suite 210
Kirkland, Washington 98033
P: 425.454.7130 F: 425.658.1208
Web: www.milbrandtarch.com

© Copyright 2023
Milbrandt Architects, INC., P.S.
All rights reserved

11063 REGISTERED ARCHITECT
ANNA P. THOMPSON
STATE OF WASHINGTON

Building H

Partial Architectural Foundation Plan

Bradley Heights Apartments

Puyallup, Wa

Timberlane Partners

Revisions

No.	Date	Description
1	8-30-24	Permit Corrections/ Owner Changes
2	4-24-25	Permit Corrections

PRMU20240279

Initial Publish Date:

Date Plotted: 5-1-25

Job No.: 23-06

Drawn By: APT/HDM/TMK

Sheet No.: **F14**

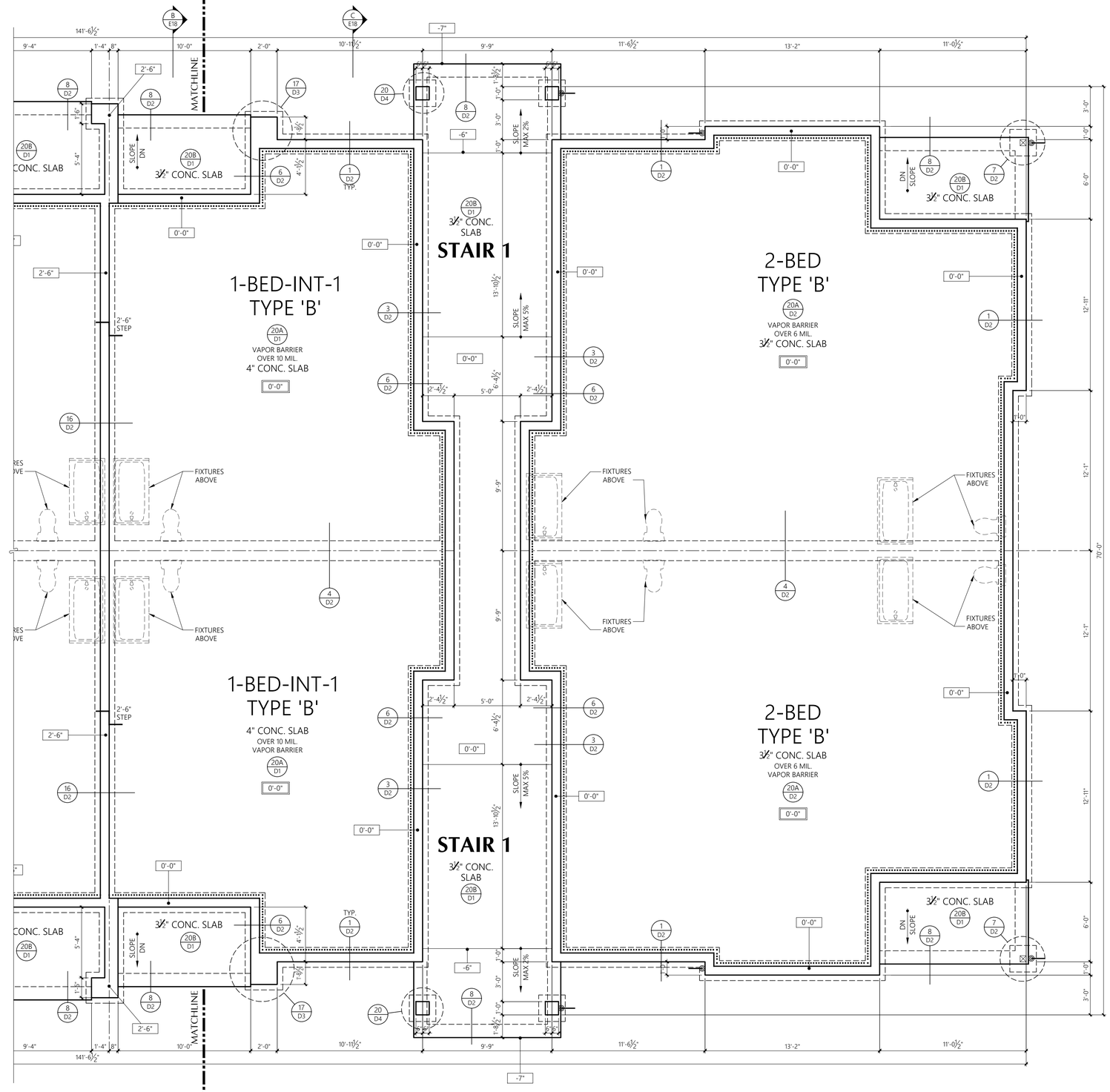

FOUNDATION NOTES

- LOCATION OF DOWNSPOUT: PROVIDE TIGHT LINE AND RISER BOOT
- X" — ELEVATION AT TOP OF CONCRETE (TOP OF FOOTING MAY VARY BECAUSE OF EXCAVATION)
- +X'-X" — FINISH SLAB ELEVATION
- R-10 RIGID PERIMETER INSULATION

SEE S2.6 FOR STRUCTURAL FOUNDATION PLAN

BUILDING H

1/4" = 1'-0"

PARTIAL ARCHITECTURAL FOUNDATION PLAN

3 SPLIT LEVEL, 24-UNIT BUILDING

MILBRANDT ARCHITECTS

25 Central Way, Suite 210
Kirkland, Washington 98033
P: 425.454.7130 F: 425.658.1208
Web: www.milbrandtarch.com

© Copyright 2023
Milbrandt Architects, INC., P.S.
All rights reserved

11063 REGISTERED ARCHITECT
ANNA P. THOMPSON
STATE OF WASHINGTON

Building H

Partial Architectural Foundation Plan

Bradley Heights Apartments

Puyallup, Wa

Timberlane Partners

Revisions

No.	Date	Description
2	4-24-25	Permit Corrections

PRMU20240279

Initial Publish Date:

Date Plotted: 5-1-25

Job No.: 23-06

Drawn By: APT/HDM/TMK

Sheet No.: F15

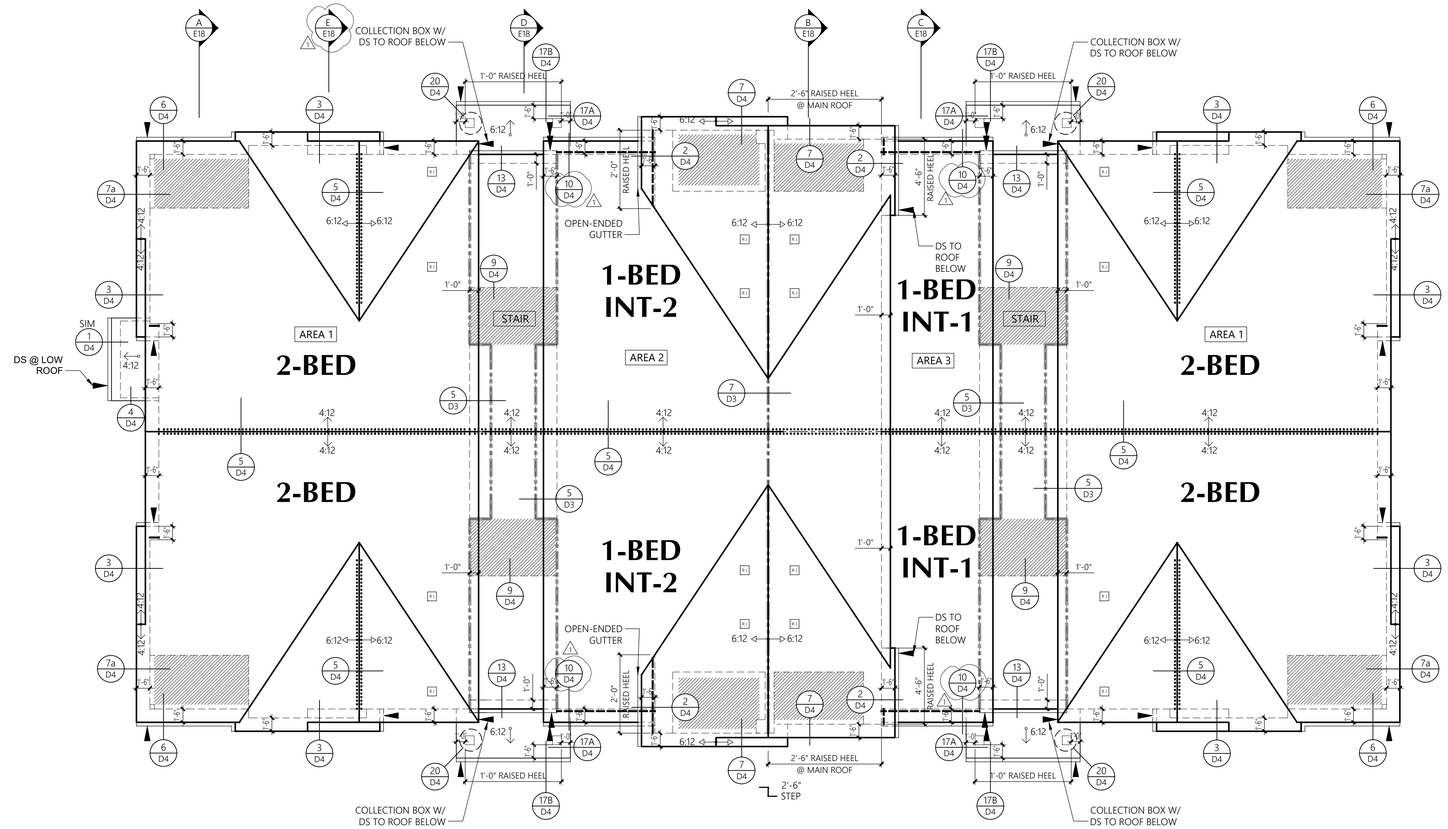

BUILDING H

ROOF PLAN

1/8" = 1'-0"

ROOF VENTING CALCULATIONS															
Area Description	Attic Area (SF)	Venting Ratio	Required Venting (SI)	Low Eave Vent (LF)	Low Jacks (Qty)	High Jacks (Qty)	Vented Soffit (SF)	Ridge Vent (LF)	Venting Provided (SI)						* % of req'd
				2.4	50.0	50.0	5.9	12.0	Lower	%	Upper	%	Total	%*	
AREA 1	2,265	1/ 300	1,087	0	4	0	116	68	884	52%	816	48%	1,700	156%	
AREA 2	1,580	1/ 300	758	36	0	4	102	25	688	58%	500	42%	1,188	157%	
AREA 3	1,556	1/ 300	747	20	0	4	108	24	685	58%	488	42%	1,173	157%	
STAIR	492	1/ 150	472	0	0	0	124	5	732	92%	60	8%	792	168%	

CONTRACTOR NOTE

Attic spaces will be draft stopped per 2021 Washington State Building Code, Section 708.4.2.

In Group R-2 occupancies up to and including four stories in height in buildings not exceeding 60 feet (18 288 mm) in height above grade plane, the attic space shall be subdivided by draftstops into areas not exceeding 3,000 square feet (279 m2) or above every two dwelling units, whichever is smaller.

ROOF LEGEND

- ROOF JACK 50 SQ.IN. NET FREE AREA
- 4:12 SLOPE INDICATOR U.N.O.
- 6:12 SLOPE INDICATOR U.N.O.
- BUILDING OUTLINE
- EAVE VENTING 2.4 SQ.IN./LF. NET FREE AREA
- RIDGE VENTING 12 SQ.IN./LF. NET FREE AREA
- UNIT SEPARATION AND DRAFT STOPPING LOCATIONS AT ATTIC
- GUTTER (DOUBLE LINE)
- DOWNSPOUT LOCATION
- VENTED FIBER CEMENT SOFFIT 5.9 SQ.IN./LF. NET FREE AREA

City of Puyallup
Permitted & Inspected Across Multiple Disciplines
Building | Planning | Engineering | Public Works | Fire | Parks

MILBRANDT ARCHITECTS
25 Central Way, Suite 210
Kirkland, Washington 98033
P: 425.454.7130 F: 425.658.1208
Web: www.milbrandtarch.com

© Copyright 2023
Milbrandt Architects, INC., P.S.
All rights reserved

11063 REGISTERED ARCHITECT
ANNA P. THOMPSON
STATE OF WASHINGTON

Building H

Roof Plan

Bradley Heights Apartments

Puyallup, Wa

Timberlane Partners

Revisions

No.	Date	Description
1	8-30-24	Owner Changes/ Permit Corrections

PRMU20240279

Initial Publish Date:

Date Plotted: 5-1-25

Job No.: 23-06

Drawn By: APT/HDM/TMK

Sheet No.: R8

H:\2306\BUILDING H.DWG

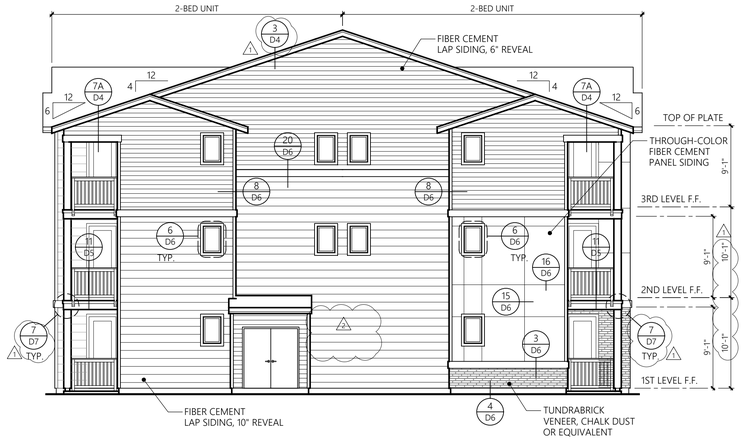

BUILDING H SIDE ELEVATION

1/8" = 1'-0"

ELEVATION SCHEME 1

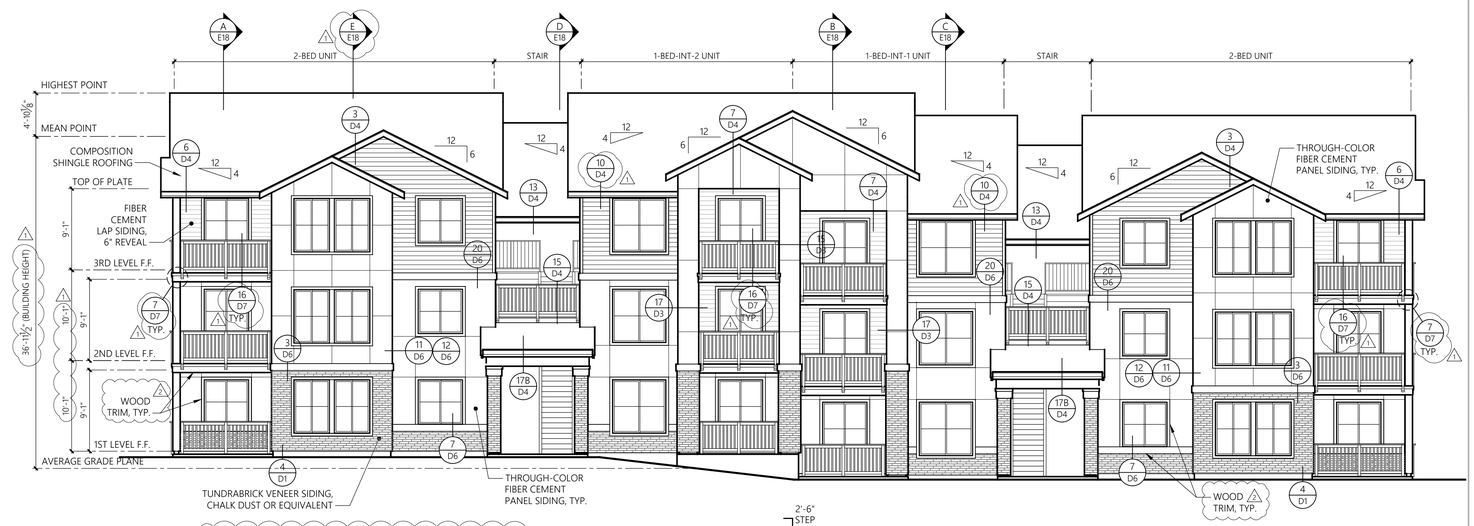

BUILDING H FRONT ELEVATION

1/8" = 1'-0"

ELEVATION SCHEME 1

MATERIAL LEGEND - 27TH AVE ELEVATION

BASE	BRICK VENEER TundraBrick, Chalk Dust or equivalent
BODY 1	THROUGH-COLOR FIBER CEMENT PANEL SIDING Equitone Natura, N163 or equivalent
BODY 2	THROUGH-COLOR FIBER CEMENT PANEL SIDING Equitone Natura, N412 or equivalent
BODY 4	FIBER CEMENT LAP SIDING Pure White - SW7005
ACCENT	TRIM AND DOORS Inkwell - SW6992

ALL TRIM MATERIAL TO BE CEDAR WOOD ON 27TH AVE ELEVATION

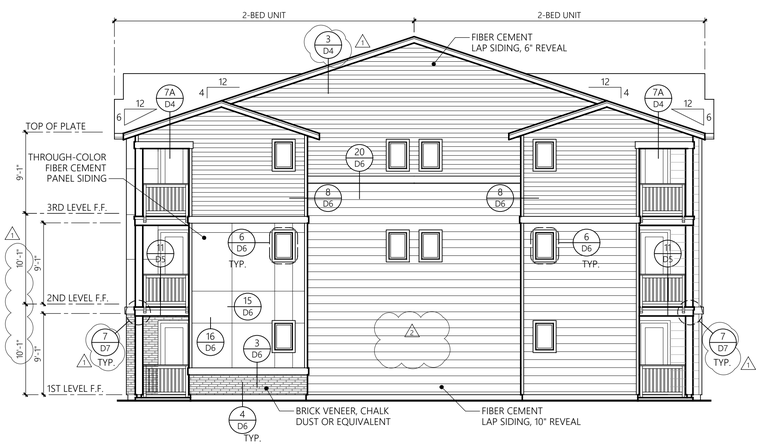

BUILDING H SIDE ELEVATION

1/8" = 1'-0"

ELEVATION SCHEME 1

BUILDING H REAR ELEVATION

1/8" = 1'-0"

ELEVATION SCHEME 1

MILBRANDT ARCHITECTS

25 Central Way, Suite 210
Kirkland, Washington 98033
P: 425.454.7130 F: 425.658.1208
Web: www.milbrandtarch.com

© Copyright 2023
Milbrandt Architects, INC., P.S.
All rights reserved

11063 REGISTERED ARCHITECT
ANNA P. THOMPSON
STATE OF WASHINGTON

Building H
Exterior Elevations

Bradley Heights Apartments

Puyallup, Wa

Timberlane Partners

Revisions

No.	Date	Description
1	8-30-24	Owner Changes/ Permit Corrections
2	4-24-25	Permit Corrections

PRMU20240279

Initial Publish Date:

Date Plotted: 5-6-25

Job No.: 23-06

Drawn By: APT/HDM/TMK

Sheet No.:

E17

H:\2306\BUILDING H.DWG

CONTRACTOR NOTE

Studs shall be continuous from support at sole plate to a support at the top plate, per Washington State Building Code 2308.5.1

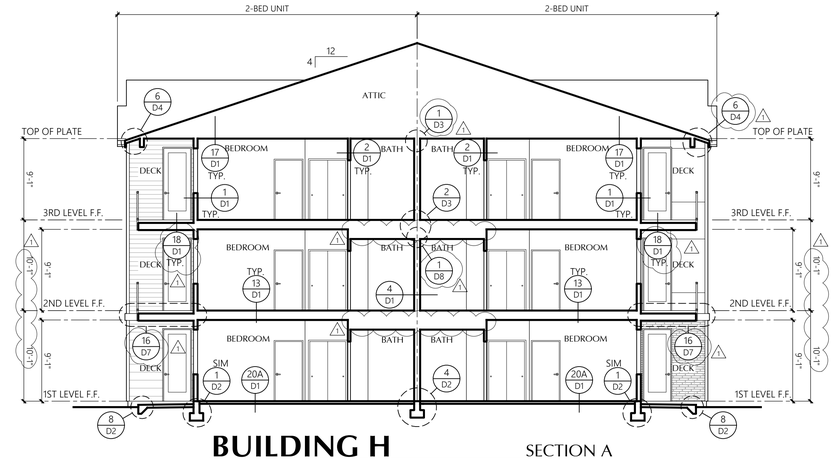

BUILDING H — SECTION A

1/8" = 1'-0"

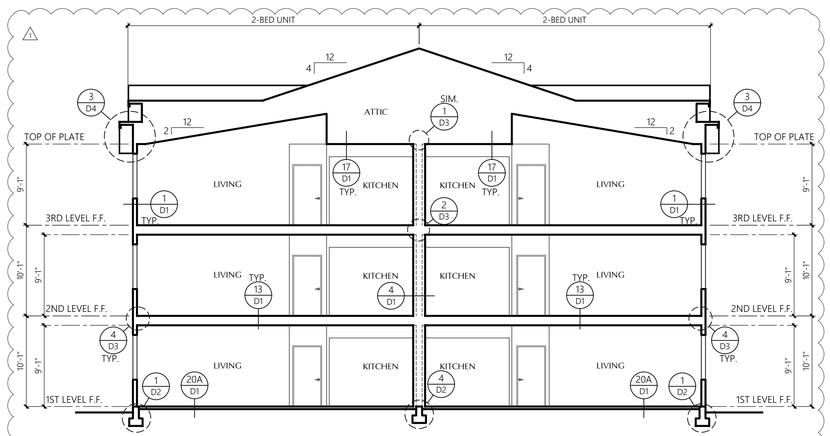

BUILDING H — SECTION E

1/8" = 1'-0"

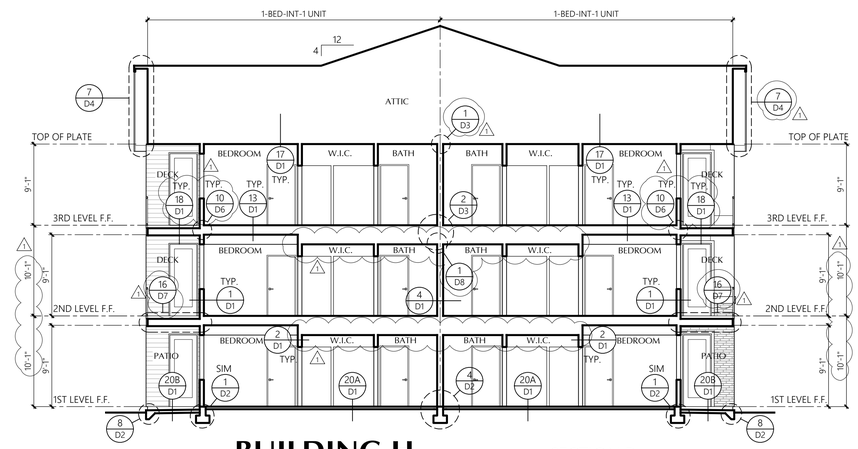

BUILDING H — SECTION B

1/8" = 1'-0"

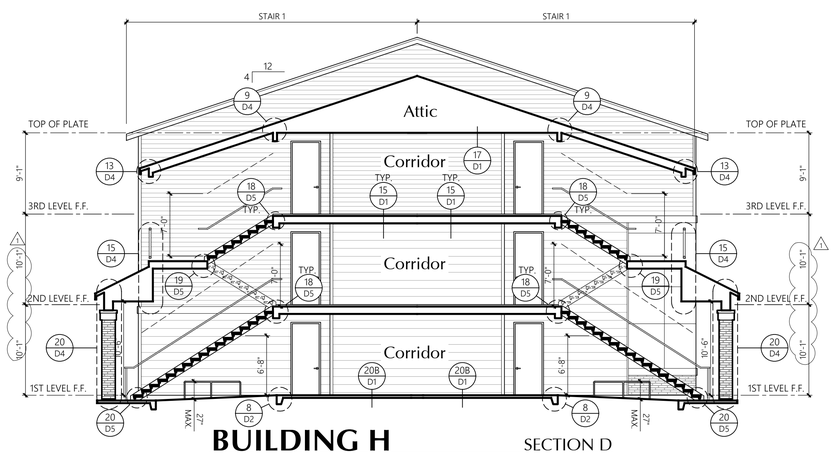

BUILDING H — SECTION D

1/8" = 1'-0"

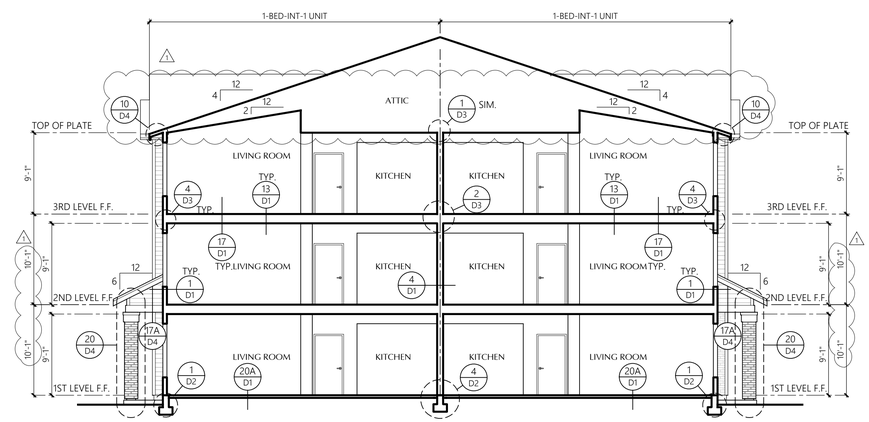

BUILDING H — SECTION C

1/8" = 1'-0"

MILBRANDT ARCHITECTS

25 Central Way, Suite 210
Kirkland, Washington 98033
P: 425.454.7130 F: 425.658.1208
Web: www.milbrandtarch.com

© Copyright 2023
Milbrandt Architects, INC., P.S.
All rights reserved

11063 REGISTERED ARCHITECT
ANNA P. THOMPSON
STATE OF WASHINGTON

Building H

Building Sections

Bradley Heights Apartments

Puyallup, Wa

Timberlane Partners

Revisions

No.	Date	Description
1	8-30-24	Owner Changes/ Permit Corrections
2	4-24-25	Permit Corrections

PRMU20240279

Initial Publish Date:

Date Plotted: 5-1-25

Job No.: 23-06

Drawn By: APT/HDM/TMK

Sheet No.: **E18**

H:\2308\BUILDING H.DWG

GLAZING CALCULATIONS WITHIN THE PEDESTRIAN VIEW PLANE

AREA OF ELEVATION: 563 SF
AREA OF GLAZING: 270 SF
PERCENTAGE OF GLAZING: 48%

BUILDING H

1/8" = 1'-0"

GLAZING DIAGRAM

MILBRANDT ARCHITECTS

25 Central Way, Suite 210
Kirkland, Washington 98033
P: 425.454.7130 F: 425.658.1208
Web: www.milbrandtarch.com

© Copyright 2023
Milbrandt Architects, INC., P.S.
All rights reserved

11063 REGISTERED ARCHITECT
ANNA P. THOMPSON
STATE OF WASHINGTON

Building Glazing Diagram

Building H

Bradley Heights Apartments

Puyallup, Wa

Timberlane Partners

Revisions

No.	Date	Description

PRMU20240279

Initial Publish Date:

Date Plotted: 5-1-25

Job No.: 23-06

Drawn By: APT/DJV/JLL

Sheet No.:

E19

H:\2306\BUILDING GLAZING DIAGRAM.DWG

Structural Notes

1.0 GENERAL

THESE STRUCTURAL NOTES SUPPLEMENT THE SPECIFICATIONS, ANY DISCREPANCY FOUND AMONG THE DRAWINGS, SPECIFICATIONS, THESE NOTES, AND THE SITE CONDITIONS SHALL BE REPORTED TO THE ARCHITECT, WHO SHALL CORRECT SUCH DISCREPANCY IN WRITING. ANY WORK DONE BY THE CONTRACTOR AFTER DISCOVERY OF SUCH DISCREPANCY SHALL BE DONE AT THE CONTRACTOR'S RISK. THE CONTRACTOR SHALL VERIFY AND COORDINATE THE DIMENSIONS AMONG ALL DRAWINGS PRIOR TO PROCEEDING WITH ANY WORK OR FABRICATION. THE CONTRACTOR IS RESPONSIBLE FOR ALL BRACING AND SHORING DURING CONSTRUCTION.

1.1 CODES

ALL METHODS, MATERIALS AND WORKMANSHIP SHALL CONFORM TO THE REQUIREMENTS OF THE 2018 INTERNATIONAL BUILDING CODE (IBC), AS AMENDED AND ADOPTED BY THE STATE OF WASHINGTON; A.C.I. 318-14; A.I.S.C. 14TH EDITION; AWS D1.1-06; A.I.T.C. 2ND EDITION; NDS 2018 WITH 2018 WIND & SEISMIC PROVISIONS AND A.I.S.I 2012 EDITION.

1.2 DESIGN CRITERIA

A. VERTICAL LOADS

1. LIVE LOADS

ROOF (SNOW) Is = 1.0	25 PSF
FLOORS (RESIDENTIAL)	40 PSF
DECKS (RESIDENTIAL POST/BM SUPPORT)	60 PSF
STAIRS/EXITS	100 PSF

2. DEAD LOADS

ROOF	22 PSF
FLOORS (RESIDENTIAL)	26 PSF
DECKS	47 PSF
BREEZEWAY	47 PSF

B. LATERAL LOADS:

LATERAL FORCES ARE TRANSMITTED BY DIAPHRAGM ACTION OF THE FLOORS TO SHEAR WALLS. LOADS ARE THEN TRANSFERRED TO THE FOOTINGS, WHERE ULTIMATE DISPLACEMENT IS RESISTED BY PASSIVE PRESSURE OF EARTH AND SLIDING FRICTION OF EARTH. OVERTURNING IS RESISTED BY THE DEAD LOAD OF THE STRUCTURE.

1. WIND:
EXPOSURE B
ELEVATION = 386 FEET
BASIC WIND SPEED = 97 M.P.H. (3 SECOND GUST, ULTIMATE).
IMPORTANCE FACTOR, Iw = 1.0
SIMPLE DIAPHRAGM BUILDING, ENCLOSED
Kzt = 1.0

2. SEISMIC:
IMPORTANCE FACTOR, IE = 1.0 OCCUPANCY CATEGORY II
MAPPED SPECTRAL RESPONSE COEFFICIENTS, Ss = 1.263 AND S1 = 0.435
SOIL SITE CLASS = C
SPECTRAL RESPONSE COEFFICIENTS, SDs = 1.010 AND SD1 = 0.435
SEISMIC DESIGN CATEGORY = D
SEISMIC RESPONSE COEFFICIENT Cs = 0.2021 (ULTIMATE STRENGTH)
RESPONSE MODIFICATION FACTOR R = 6.5

1.3 SHOP DRAWINGS

SUBMIT SUFFICIENT COPIES OF SHOP DRAWINGS TO ARCHITECT/ENGINEER FOR THE FOLLOWING:

1. REINFORCING STEEL (CONCRETE / MASONRY)
2. CONCRETE / GROUT MIX DESIGNS (CONCRETE / MASONRY)
3. COMPOSITE FLOOR/ROOF JOISTS
4. P.E. ROOF/FLOOR TRUSSES
5. GLUE-LAMINATED MEMBERS

DO NOT FABRICATE PRIOR TO ARCHITECT'S/ENGINEER'S APPROVAL. ALL SHOP DRAWINGS SUBMITTED TO THE ENGINEER SHALL BEAR THE STAMPED APPROVAL OF THE CONTRACTOR. SHOP DRAWING APPROVAL BY ANDERSONCHASE STRUCTURAL ENGINEERS SHALL NOT IMPLY THAT THE PROJECT MAY BE BUILT FROM THE SHOP DRAWINGS. RATHER, THE PROJECT PLANS SHALL BE USED FOR CONSTRUCTION. ALL PERMANENT BRACING FOR TRUSSES SHALL BE DETAILED AND DESIGNED BY THE TRUSS SUPPLIER. CONTRACTOR SHALL REVIEW SHOP DRAWINGS AND STAMP INDICATING THIS PRIOR TO REVIEW BY ENGINEER OF RECORD.

2.0 SITE WORK

2.1 SOIL DATA (PER GEOTECHNICAL REPORT DATED FEBRUARY 10, 2022 PREPARED BY GEO RESOURCES #0419036006

FOR LOCATIONS SEE SOILS REPORT. SOIL BEARING @ CONT. SPREAD FOOTINGS = 2000 PSF. ACTIVE AND PASSIVE PRESSURES ARE 35 PCF AND 300 PCF RESPECTIVELY. WHERE GEOTECHNICAL REPORT HAS NOT BEEN PROVIDED, THE ABOVE VALUES ARE ASSUMED AND THESE VALUES SHALL BE FIELD VERIFIED.

2.2 EXCAVATION

EXCAVATE PER GEOTECH REPORT, PROOFROLL SUBGRADES TO ATLEAST 92% MDD PER ASTM D1557 TEST METHOD FOR FOOTINGS DOWN TO DEPTH SHOWN ON DRAWINGS OR TO FIRM UNDISTURBED MATERIAL. AREAS OVER-EXCAVATED SHALL BE BACKFILLED WITH LEAN CONCRETE (f'c = 2000 PSI), OR BE STRUCTURALLY FILLED PER SECTION 2.3 AND SHALL BE AT THE CONTRACTOR'S EXPENSE.

2.3 BACKFILL AND COMPACTION

BACKFILL SHALL NOT BE PLACED UNTIL AFTER THE REMOVAL OF ALL FORMS, SCREEDS, OTHER WOOD DEBRIS AND MATERIAL SUBJECT TO ROT OR CORROSION. USE ONLY MATERIALS APPROVED FOR BACKFILL. IN AREAS UNDER SLABS OR FOOTINGS, MATERIAL SHOULD BE GRANULAR IN NATURE, PLACED IN 6-INCH LIFTS AND COMPACTED TO AT LEAST 95% OF MAXIMUM DRY DENSITY AS DETERMINED BY AASHTO COMPACTION TEST, PROCEDURE T-180. THE FILL SHOULD BE LIMITED TO CLEAN, GRANULAR MATERIAL.

3.0 CONCRETE

3.1 GENERAL

NORMAL WEIGHT CONCRETE MEETING THE REQUIREMENTS OF ACI 301-05 ESTABLISH PROPORTIONS OF CEMENT, COARSE AND FINE AGGREGATES, WATER, AND ADMIXTURES TO PRODUCE THE PROPERTIES SPECIFIED FOR EACH CONCRETE MIX TYPE PER ACI-301 ON THE BASIS OF PREVIOUS FIELD EXPERIENCE OR TRIAL BATCHES. USE ADMIXTURES IN ACCORDANCE WITH THE MANUFACTURER'S DIRECTIONS. USE AMOUNTS OF WATER-REDUCING ADMIXTURE THAT WILL PERMIT PLACING WITHOUT SEGREGATION, HONEYCOMBING OR ROCK POCKETS. THE SLUMPS SPECIFIED ARE THE SLUMPS REQUIRED AT THE POINT OF PLACEMENT INTO THE STRUCTURE. USE INTERIOR MECHANICAL VIBRATORS WITH 7000 RPM MINIMUM FREQUENCY. DO NOT OVER-VIBRATE. DO NOT MOVE THE CONCRETE HORIZONTALLY USING THE VIBRATOR. CONCRETE SHALL BE POURED MONOLITHICALLY BETWEEN CONSTRUCTION OR CONTROL JOINTS. PROTECT ALL FRESHLY PLACED CONCRETE FROM PREMATURE DRYING AND EXCESSIVE HOT OR COLD TEMPERATURES FOR SEVEN DAYS AFTER POURING. PROVIDE ENGINEER WITH PROPOSED CONSTRUCTION OR CONTROL JOINT LOCATIONS FOR HIS APPROVAL, OR USE JOINTS AS SHOWN ON THE DRAWINGS. ALL REINFORCEMENT TIE WIRES AND FORM ANCHORS SHALL BE CUT OFF FLUSH WITH THE SURFACE; SURFACES WHERE EXPOSED SHALL BE SMOOTH AND FREE FROM IRREGULARITIES.

3.2 STRENGTH

DESIGN MIXES TO PROVIDE NORMAL WEIGHT CONCRETE WITH THE FOLLOWING PROPERTIES:

APPLICATION	W/C RATIO	DESIGN STRENGTH F'c (PSI)	F'c PER ACI
FOOTINGS	.45	2500	4500²
FOUNDATION WALLS	.45	2500	4500²
EXT. SLABS ON GRADE	.45	2500	4500²
INT. SLABS ON GRADE	.50	2500	3000

NOTES:

1. CONCRETE EXPOSED TO WEATHER FOR EXPOSURE CLASS F2 AND SLABS ON GRADE SHALL HAVE A MIN F'c PER TABLE AND HAVE 5% AIR ENTRAINMENT.
2. DESIGN STRENGTH F'c (USED IN DESIGN). F'c PER ACI TABLE 19.3.2.1 FOR F2 EXPOSURE CLASS.
3. PER IBC 1705.3 SPECIAL INSPECTION STRENGTH TESTS NOT REQUIRED FOR CONCRETE f'c>2500 WHERE STRENGTH IS INCREASED FOR DURABILITY.

3.3 MATERIAL - CEMENT, WATER & AGGREGATES PER ACI 301

A. CEMENT MUST CONFORM TO ASTM C-150, TYPE I OR TYPE II. ENGINEER'S APPROVAL IS REQUIRED FOR USE OF TYPE III CEMENT.

B. WATER TO BE CLEAN AND POTABLE.

C. COARSE AND FINE AGGREGATES TO CONFORM TO ASTM-C33.

3.4 MATERIALS

A. WATER REDUCING ADMIXTURES: CONCRETE USING POZZOLITH ADMIXTURES TO PRODUCE FLOWABLE CONCRETE MAY BE USED WITH THE ENGINEER'S APPROVAL AND MUST CONFORM TO ASTM-C494, POZZOLITH POLYHEED, POZZOLITH 100XR, OR POZZUTECH 20. POZZOLITH SHALL BE INCORPORATED INTO ALL CONCRETE IN EXACT ACCORDANCE WITH THE MANUFACTURER'S INSTRUCTIONS. ADMIXTURES AND DOSAGES WILL VARY DEPENDING ON CLIMATIC CONDITIONS AND THE CONTRACTOR'S JOBSITE REQUIREMENTS. MAXIMUM SLUMP FOR SUCH CONCRETE SHALL NOT EXCEED 8" WITH A MINIMUM OF 10 OUNCES OF POLYHEED PER 100 OUNCES OF CEMENT. USE IN ACCORDANCE WITH MANUFACTURER'S RECOMMENDATIONS.

B. AIR ENTRAINMENT: CONFORM TO ASTM-C260 AND ASTM-C494, MBVR OR MICRO-AIR BY MASTER BUILDER. NO AIR ENTRAINMENT IN COLUMNS WITHOUT PRIOR WRITTEN PERMISSION BY ENGINEER OF RECORD. ENTRAIN 5% +/- 1% AIR BY VOLUME IN ALL EXPOSED CONCRETE.

C. OTHER ADMIXTURE: NO OTHER ADMIXTURES PERMITTED UNLESS PRIOR APPROVAL IS GIVEN BY THE ENGINEER. NO ADMIXTURES CONTAINING CHLORIDES ARE PERMITTED.

3.5 REINFORCING STEEL

DETAIL, FABRICATE AND PLACE PER ACI-315 AND ACI-318. SUPPORT REINFORCEMENT WITH APPROVED CHAIRS, SPACERS, OR TIES.

A. STEEL REINFORCEMENT SHALL BE NEW, DEFORMED BILLET STEEL, MEETING ASTM STANDARD A-615, A-706 AT BOUNDARY ELEMENTS; GRADE 60 FOR #3 AND LARGER BARS UNLESS NOTED OTHERWISE ON THE PLANS. SHOP DRAWINGS SHALL BE MARKED ACCORDINGLY AND SUBMITTED TO THE ENGINEER FOR REVIEW PRIOR TO FABRICATION. GRADE 60 REBARS SHALL NOT BE BENT IN FIELD AFTER CONCRETE PLACEMENT. ALL BEND SHALL BE PER ACI.

B. REINFORCEMENT IN ALL WALLS, SLABS, AND FOOTINGS SHALL BE CONTINUOUS AROUND CORNERS OR CORNER BARS PROVIDED, BOTH VERTICAL AND HORIZONTAL.

C. LAPS: ALL TENSION SPLICES ARE ACCORDING TO ACI 318, CLASS B AND ALL COMPRESSION SPLICES ARE 30 DIAMETERS FOR f'c GREATER THAN 3000 PSI AND ARE 40 DIAMETERS FOR f'c WHICH IS LESS THAN 3000 PSI, UNLESS NOTED OTHERWISE. SEE DETAIL 17/S3.0 FOR TYPICAL SPLICE AMOUNTS BASE ON BAR SIZE.

D. TRIM REINFORCING: AROUND ALL OPENINGS SHALL BE A MINIMUM 1-#5 TOP AND BOTTOM, EXTENDING 2'-6" BEYOND OPENING AT EACH CORNER. SEE TYPICAL DETAILS.

E. WELDING: TACK WELDING OF REBAR IS NOT PERMITTED UNLESS CALLED FOR AND APPROVED BY THE ENGINEER.

F. MINIMUM REINFORCING: WHERE REINFORCEMENT IS NOT SHOWN ON THE DRAWINGS, THE "BUILDING CODE REQUIREMENTS FOR REINFORCED CONCRETE" (ACI 318) SHALL BE REFERRED TO FOR PROPER REINFORCEMENT.

G. REBAR COVER: PROVIDE CONCRETE PROTECTION FOR REINFORCEMENT AS FOLLOWS:

COVER	CONDITION
3"	CONCRETE DEPOSITED AGAINST EARTH
2"	CONCRETE DEPOSITED AGAINST FORMS BUT EXPOSED TO EARTH
1-1/2"	MAIN REINFORCING IN BEAMS
1-1/2"	TO TIES IN COLUMNS, AND TIED REBAR IN WALLS
1-1/2"	FOR BARS IN SLABS ON GROUND
3/4"	FOR BARS IN SLABS ON FORMS

H. WELDED WIRE FABRIC: ASTM-A185 AND ASTM-A82

I. DEFORMED BAR ANCHORS: ASTM-A496

K. FIBREMESH: PROVIDE FIBREMESH STRANDS WITHIN CONCRETE PER THE MANUFACTURERS SPECIFICATION (1.5#/CU. YARD TYPICALLY) WHERE REQUIRED BY THE OWNER IN LIEU OF UTILIZING WELDED WIRE FABRIC WITHIN SLABS ON GRADE.

3.6 EPOXY DOWELED REINFORCEMENT

A. ALL REINFORCEMENT WHICH IS TO BE DOWELED INTO EXISTING CONCRETE SHALL BE INSTALLED USING THE SIMPSON SET-XP ADHESIVE ANCHORING SYSTEM PER ICC REPORT ESR-2508 OR APPROVED EQUAL. ADHESIVE ANCHORS SHALL BE INSTALLED PER THE MANUFACTURERS SPECIFICATIONS OR APPROVED EQUAL.

B. EPOXY SHALL BE MIXED, APPLIED, AND CURED IN ACCORDANCE WITH THE MANUFACTURERS GUIDELINES. REINFORCEMENT AND CONCRETE SHALL BE CLEAN AND FREE OF IRREGULARITY. EPOXY SHALL NOT BE MIXED OR CURED IN AIR AND / OR CONCRETE TEMPERATURES BELOW MINIMUM PER MANUFACTURER'S SPECIFICATIONS.

C. EPOXY DOWELING OF REINFORCEMENT IN OVERHEAD APPLICATIONS SHALL NOT BE ALLOWED WITHOUT PRIOR WRITTEN APPROVAL FROM THE ENGINEER OF RECORD.

4.0 METALS

4.1 WELDING

A. ALL WELDING SHALL BE IN ACCORDANCE WITH AWS D1.1 "STRUCTURAL WELDING CODE" & D1.3 "STRUCTURAL WELDING CODE - SHEET STEEL."

B. ALL WELDING SHALL BE DONE BY AWS/WABO (WASHINGTON STATE ASSOCIATION OF BUILDING OFFICIALS) CERTIFIED WELDERS. FOR ALL MOMENT FRAMES WELDERS SHALL HAVE ADDITIONAL CERTIFICATION SHOWING QUALIFIED IN ACCORDANCE WITH AWS D1.8, SECTION 5, WELDER QUALIFICATION, THE SUPPLEMENTAL WELDER QUALIFICATION FOR RESTRICTED ACCESS WELDING.

5.0 STRUCTURAL STEEL

A. ALL DETAILING, FABRICATION, AND ERECTION SHALL CONFORM TO THE AISC "MANUAL OF STEEL CONSTRUCTION." STEEL SHALL CONFORM TO THE FOLLOWING, UNO:

ALL STEEL, UNO	ASTM A992.
	ASTM A572, GRADE 50, A447, Fy = 50 KSI OR A588 Fy = 50 KSI ONLY W/ PRIOR APPROVAL OF ENGINEER OF RECORD.
ANGLES	ASTM A36, Fy = 36 ksi
CHANNELS, EMBEDMENTS IN CONCRETE AND MISC. METALS, UNO	ASTM A36, Fy = 36 ksi OR STEEL TYPES LISTED UNDER "ALL STEEL"
SQUARE AND RECTANGULAR STRUCTURAL TUBES	ASTM A500, GRADE B, Fy = 46 ksi
STEEL PIPE DIAMETER LESS THAN OR EQUAL TO 12" NOM	ASTM A53, TYPE E OR S, GRADE B, Fy = 35 ksi

B. ALL WORK SHALL BE IN ACCORDANCE WITH THE AISC SPECIFICATION. SHOP DRAWINGS SHALL BE SUBMITTED TO THE ARCHITECT/ENGINEER BEFORE COMMENCING FABRICATION. ALL STEEL ANCHORS AND TIES AND OTHER MEMBERS EMBEDDED IN CONCRETE OR MASONRY SHALL BE LEFT UNPAINTED. DIMENSIONAL TOLERANCE FOR BUILD-UP MEMBERS SHALL BE PER AWS D1.1. GENERAL NOTES FOR STEEL CONNECTIONS SHALL APPLY TO ALL STEEL CONNECTIONS, UNO.

C. STEEL BEAMS ARE EQUALLY SPACED BETWEEN DIMENSIONAL POINTS. MINIMUM CONNECTIONS SHALL BE A TWO-BOLT CONNECTION USING 7/8-INCH DIAMETER A325 BOLTS IN SINGLE SHEAR. OPTIONAL TO USE F1554 BOLTS WITH PRIOR APPROVAL OF ENGINEER OF RECORD. ALL HIGH-STRENGTH BOLTS SHALL BE INSTALLED, TIGHTENED AND INPSECTED IN ACCORDANCE WITH THE AISC SPECIFICATION FOR STRUCTURAL JOINTS USING ASTM A325 OR A490 BOLTS. THE CRITERIA FOR SLIP-CRITICAL CONNECTIONS SHALL APPLY TO ALL CONNECTIONS UNLESS SPECIFICALLY NOTED AS SNUG TIGHT ON THE STRUCTURAL DRAWINGS. WHERE CONNECTIONS ARE NOTED SNUG TIGHT THE CONTRACTOR MAY INSTALL PER CRITERIA FOR SNUG TIGHT BOLTS. SLIP CRITICAL CONNECTIONS SHALL USE LOAD INDICATOR WASHERS OR TENSION CONTROL BOLTS. ALL ASTM A307 BOLTS SHALL BE PROVIDED WITH LOCK WASHERS UNDER NUTS OR SELF-LOCKING NUTS. ALL BOLT HOLES SHALL BE STANDARD SIZE, UNO.

D. THE CONTRACTOR SHALL BE RESPONSIBLE FOR ALL ERECTION AIDS THAT INCLUDE, BUT ARE NOT LIMITED TO: ERECTION ANGLES; LIFT HOLES, AND OTHER AIDS.

E. METAL PROTECTION - ALL MISCELLANEOUS STEEL AND HARDWARE EXPOSED TO VIEW OR IN UNHEATED PORTION OF BUILDING SHALL BE GALVANIZED PER ASTM A-123 WITH 1.25 OZ OF ZINC SPELTER PER SQUARE FOOT OF SURFACE AREA. ALL OTHER STEEL SURFACES TO BE SHOP PAINTED AFTER FABRICATION.

F. ALL STEEL BEAM COPING SHALL CONFORM TO AISC STANDARD PRACTICE.

G. GROUT FOR BEARING PLATES SHALL BE NON-SHRINK EMBECO BY MASTER BUILDERS, INC. OR APPROVED EQUAL.

ALL EXPOSED STRUCTURAL MATERIALS OR MATERIAL IN CONTACT WITH CONCRETE SHALL BE PRESSURE TREATED (SEE SECTION 7.10).

6.0 LIGHT GAUGE STEEL

7.0 CARPENTRY

7.1 ROUGH CARPENTRY

ALL 2x FRAMING LUMBER SHALL BE STUD GRADE HEM-FIR FOR STUDS AND STANDARD OR BETTER FOR PLATES UNLESS OTHERWISE NOTED ON THE DRAWINGS OR BELOW. ALL 2" LUMBER SHALL BE KILN DRIED (KD) OR SURFACE DRIED (SD). EACH PIECE OF LUMBER SHALL BEAR THE STAMP OF THE WEST COAST LUMBER INSPECTION BUREAU (WCLIB) OR WESTERN WOOD PRODUCTS ASSOCIATION (WWPA) SHOWING GRADE MARK OR APPROVED EQUAL. OTHER MATERIALS SHALL BE AS SHOWN BELOW:

MEMBER	SPECIES
2x & 3x STUDS	STUD GRADE HEM FIR
2x JOISTS	#2 HEM FIR
4x HEADERS	#2 HEM FIR
6x HEADERS	#2 DOUGLAS FIR
4x COLUMNS	#2 HEM FIR
6x COLUMNS	#2 DOUGLAS FIR

ALL EXPOSED STRUCTURAL MATERIALS OR MATERIAL IN CONTACT WITH CONCRETE SHALL BE PRESSURE TREATED (SEE SECTION 7.10).

7.3 PRE-ENGINEERED ROOF TRUSSES

ALL PREFABRICATED WOOD ROOF AND FLOOR TRUSSES SHALL BE DESIGNED BE OR UNDER THE DIRECT SUPERVISION OF A LICENSED PROFESSIONAL ENGINEER REGISTERED IN THE STATE WHERE THE STRUCTURE IS LOCATED. THE TRUSS SHOP DRAWINGS SHALL BEAR THE STAMP OF THAT ENGINEER. ALL NECESSARY BRIDGING, BLOCKING, PRE-NOTCHED PLATES, HANGERS, ETC. SHALL BE DETAILED OR SPECIFIED, AND FURNISHED BY THE MANUFACTURER. ALL PERMANENT BRACING FOR TRUSSES SHALL BE DETAILED AND DESIGNED BY THE TRUSS SUPPLIER. THE TRUSS MANUFACTURER SHALL VERIFY ALL SETBACKS, DIMENSIONS, AND BEARING POINTS PRIOR TO FABRICATION. MAXIMUM ALLOWABLE DEFLECTIONS SHALL BE AS FOLLOWS:

ROOF TOTAL LOAD	SPAN/240 OR 1.5"
ROOF LIVE LOAD	SPAN/360 OR 1"

TRUSSES SHALL BE DESIGNED FOR THE SPANS AND CONDITIONS SHOWN ON THE PLANS AND SHALL BE FURNISHED AND INSTALLED IN CONFORMANCE WITH THE MANUFACTURER'S PUBLISHED SPECIFICATIONS. ADDITIONAL CONCENTRATED LOADS FROM MECHANICAL UNITS, AND MISCELLANEOUS EQUIPMENT, ETC. SHALL BE ACCOUNTED FOR/COORDINATED WITH THE SUB-CONTRACTORS, ARCHITECT AND TRUSS ENGINEER. ALTERATION OF THE TRUSS LAYOUT INDICATED ON THE PLANS MAY REQUIRE SUPPORTING STRUCTURAL AND FOUNDATION CHANGES, THEREFORE PRIOR APPROVAL BY THE ARCHITECT AND THE STRUCTURAL ENGINEER IS REQUIRED. TRUSSES SHALL NOT BE FIELD ALTERED PRIOR TO WRITTEN APPROVAL OF THE ENGINEER OF RECORD DESIGNING THE TRUSSES.

TRUSS CONNECTIONS TO NON-LOAD BEARING WALLS SHALL BE PER THE TYPICAL DETAILS. SLIDE CLIPS SHALL NOT BE USED UNLESS APPROVED BY THE ENGINEER.

7.4 CARPENTRY HARDWARE

A. BOLTS SHALL BE ASTM A-307.

B. WASHERS SHALL BE STANDARD CUT WASHERS OR MALLEABLE IRON WASHERS.

C. ALL NAILS SHALL BE COMMON WIRE NAILS OR EQUIVALENT PNEUMATICALLY DRIVEN NAILS (P-NAILS), AMERICAN OR CANADIAN MANUFACTURER ONLY AS INDICATED BELOW. P-NAILS SHALL BE INSTALLED PER THE MANUFACTURERS GUIDELINES.

COMMON WIRE NAIL	PNEUMATIC NAIL	MINIMUM NAIL LENGTH	NAIL APPLICATION
16d COMMON	0.162" P-NAIL	3-1/2"	FRAMING
12d COMMON	0.148" P-NAIL	3-1/4"	FRAMING
N/A	0.131" P-NAIL	3"	FRAMING
10d COMMON	0.148" P-NAIL	2-1/2"	SHEATHING
8d COMMON	0.131" P-NAIL	2-1/2"	SHEATHING

D. LAG SCREWS, SHEAR PLATES

E. ANCHORS AND CONNECTORS SHALL BE SIMPSON, USP, OR OTHER ICBO APPROVED.

F. HARDWARE EXPOSED TO WEATHER OR TO VIEW SHALL BE GALVANIZED OR PROTECTED WITH OTHER APPROVED MEANS OF CORROSION PROTECTION. FOR ADDITIONAL REQUIREMENTS REGARDING HARDWARE IN EXPOSED CONDITIONS SEE SECTION 7.10.

7.5 MINIMUM NAILING - PER IBC TABLE 2304.9.1. - SEE SHEET S1.1

7.6 ANCHOR BOLTS

FOUNDATION PLATE OR SILL BOLTING SHALL BE PER IBC CHAPTER 23. PER IBC 2308.6 & 2304.3.1 ALL FOUNDATION PLATES OR SILLS SHALL BE BOLTED TO CONCRETE OR MASONRY WITH MINIMUM 1/2" NOMINAL DIAMETER ANCHOR BOLTS EMBEDDED AT LEAST 7" AND SPACED NOT MORE THAN 6 FEET APART. THERE SHALL BE A MINIMUM OF TWO BOLTS PER PIECE WITH ONE BOLT LOCATED NOT MORE THAN 12 INCHES OR LESS THAN 4 INCHES FROM EACH END OF EACH PIECE. 3" x 3" x 0.229" WASHERS ARE REQUIRED AT ALL ANCHOR BOLTS PER AF&PA SDPWS-2008 SECTION 4.3.6.4.3 THE PLATE WASHER ARE PERMITTED TO HAVE A DIAGONAL SLOT. FOR SHEAR WALL TYPES W3 AND GREATER THE PLATE WASHER MUST EXTEND TO WITHIN 1/2" OF THE EDGE OF THE BOTTOM PLATE ON SIDE(S) WITH SHEATHING.

7.7 PLYWOOD/OSB SHEATHING

EACH SHEET SHALL BEAR THE TRADEMARK OF THE AMERICAN PLYWOOD ASSOCIATION. ALL GRADING AND INSTALLATION SHALL CONFORM TO MOST CURRENT VERSION OF PS2 FOR OSB. USE THICKNESS AND NAILING AS SHOWN ON THE DRAWINGS. SHEATHING SHALL HAVE EXPOSURE RATING AS APPROPRIATE PER THE CONTRACTOR'S CONSTRUCTION AND WEATHER CONDITIONS SPECIFIED BY CONTRACTOR. EXCEPT AS OTHERWISE SHOWN OR NOTED, PROVIDE 0.131" DIA P-NAILS OR 8d COMMON NAILS AT 6" ON CENTER @ SUPPORTED PANEL EDGES AND 0.131" DIA P-NAILS OR 8d COMMON NAILS AT 12" ON CENTER ON OTHER SUPPORTING MEMBERS FOR WALLS AND ROOFS. FOR FLOORS, USE THE SAME SPACING PATTERN AS STATED FOR WALLS OR ROOF EXCEPT USE 0.148" DIA P-NAILS OR 10d COMMON NAILS.

NOTE: EQUIVALENT RATED PLYWOOD MAY BE USED IN LIEU OF OSB CALLED OUT. ALL THICKNESS AND GRADING SHALL CONFORM TO PS1 OR PS2. SHEATHING SHALL HAVE EXPOSURE RATING AS APPROPRIATE PER THE CONTRACTOR'S CONSTRUCTION AND WEATHER CONDITIONS SPECIFIED BY CONTRACTOR.

ROOF DIAPHRAGM: 1/2" MIN OSB (MIN PANEL INDEX = 24/16), WITH 0.131" DIA P-NAILS OR 8d COMMON NAILS AT 6" O.C. AT SUPPORTED PANEL EDGES AND AT 12" O.C. AT FIELD TYPICAL UNLESS NOTED OTHERWISE ON PLAN. WHERE REQUIRED, USE PLY-CLIPS INSTALLED PER MANUFACTURER'S GUIDELINES AND APA GUIDELINES.

FLOOR DIAPHRAGM: 3/4" TONGUE AND GROOVE OSB (MIN PANEL INDEX = 32/16), WITH 0.148" DIA P-NAILS OR 10d COMMON NAILS AT 6" O.C. AT SUPPORTED PANEL EDGES AND AT 12" O.C. AT FIELD TYPICAL UNLESS NOTED OTHERWISE ON PLAN. SHEATHING SHALL BE GLUE-NAILED TO FRAMING WITH APPROVED ADHESIVE PER THE ARCHITECT. FIELD NAILING SHALL BE 6" O.C. AT ALL INTERIOR SHEARWALL LOCATIONS INSTEAD OF TYPICAL 12" O.C. SPACING.

7.8 MANUFACTURED TIMBER BEAMS

A. GLULAMINATED TIMBER BEAMS (GLULAM BEAMS)

ALL STRUCTURAL GLUE-LAMINATED TIMBER, MATERIALS, MANUFACTURE AND QUALITY CONTROL SHALL BE IN CONFORMANCE WITH VOLUNTARY PRODUCT STANDARD P.S.56 "STRUCTURAL GLUED LAMINATED TIMBER", AND ALL MEMBERS SHALL BE MARKED WITH A QUALITY MARK THEREOF. ALL PLY LAYOUTS SHALL BE PER P.S. 56. CAMBERS ARE AS SHOWN ON THE DRAWINGS. ALL MEMBERS SHALL BE EITHER COMBINATION 24F-V4 (SIMPLE SPAN) OR 24F-V8 (CANTILEVERED OR CONTINUOUS SPAN) AS APPLICABLE. ALL MEMBERS SHALL BE ARCHITECTURAL APPEARANCE AND SHALL BE GLUED WITH WATERPROOF ADHESIVE PER P.S. 56. ARCHES SHALL BE COMBINATION 24F-V8 AND HAVE EXTERIOR GLUE, ARCHITECTURAL GRADE.

7.9 SHRINKAGE

WOOD MEMBERS WERE EVALUATED USING KILN DRIED (KD) OR SURFACE DRIED (SD) LUMBER (HEM-FIR WITH MOISTURE CONTENT = 19% OR LESS). THE FLOOR TO FLOOR COMPRESSION OF SUCH WOOD MEMBERS (PLATES AND JOISTS TOTALING 15.25") DUE TO A MOISTURE CONTENT CHANGE OF 10% WILL BE APPROXIMATELY 3/8 INCHES PER FLOOR. ADDITIONAL FLOOR TO FLOOR COMPRESSION OF WOOD STUDS DUE TO FULL COMPRESSIVE LOAD WILL BE APPROXIMATELY 1/32 INCHES PER FLOOR. ADDITIONAL COMPRESSION OF WOOD FRAMING MAY OCCUR DUE TO FRAMING TECHNIQUES AND LOCAL STRESS CONCENTRATIONS. ALL FULL BUILDING HEIGHT ELECTRICAL, MECHANICAL, AND PLUMBING SYSTEMS AS WELL AS EXTERIOR FINISHES SHOULD BE DESIGNED TO ACCOMMODATE THESE MOVEMENTS. USE OF WOOD STUDS, PLATES & JOISTS WHICH WILL HAVE MOISTURE CONTENT CHANGES GREATER THAN 10% WILL EXPERIENCE GREATER MOVEMENT. FLOOR ASSEMBLIES UTILIZING DEPTHS GREATER THAN THOSE ASSUMED ABOVE MAY EXPERIENCE GREATER MOVEMENTS. LOCALIZED HEADERS MAY EXPERIENCE SIMILAR SHRINKAGE AS DESCRIBED ABOVE.

7.10 PRESERVATIVE TREATMENT

A. PRESERVATIVE TREATMENTS

SEE ARCH FOR ALL PRESERVATIVE TREATED REQUIREMENTS AND FINISHES OF EXPOSED TIMBER MEMBERS AND AT EXTERIOR CONDITIONS.

ALL EXPOSED FRAMING LUMBER, PLYWOOD AND DECK MATERIALS SHALL BE PRESSURE TREATED PER AWPA SPECIFICATION P-5 OR OTHER APPROVED TREATMENT. ALL CUTTING AND BORING AFTER PRESSURE TREATMENT SHALL BE CARED FOR IN ACCORDANCE WITH AWPA SPECIFICATION M-4.

ACZA PRESERVATIVE TREATMENT SHALL NOT BE PERMITTED EXCEPT WHERE HARDWARE (INCLUDING NAILS) IN CONTACT WITH THE TREATED PRODUCT IS COMPOSED ENTIRELY OF STAINLESS STEEL MATERIAL. STAINLESS STEEL HARDWARE SUBSTITUTED FOR HDG PRODUCTS SHALL MEET OR EXCEED THE STRENGTH AND PERFORMANCE OF THE SUBSTITUTED HDG PRODUCT ORIGINALLY SPECIFIED.

B. GALVANIZATION OF HARDWARE (EXPOSED OR IN CONTACT WITH PRESERVATIVE TREATED WOOD)

1. PROTECTED ENVIRONMENT

ALL HARDWARE (HANGERS, NAILS, BOLTS, LAG SCREWS, FLASHING ETC...) SHALL BE HOT-DIP GALVANIZED (HDG) TO A MINIMUM COATING LEVEL OF G185 (1.85 oz/ft2 OF ZINC) WHEN IN CONTACT WITH PRESERVATIVE TREATED WOOD CONTAINING PRODUCTS SUCH AS, BUT NOT LIMITED TO; CCA, ACQ, OR CBA. HDG PRODUCTS SHALL CONFORM TO THE FOLLOWING ASTM STANDARDS AS APPLICABLE; ASTM A653, ASTM A123, AND ASTM A153. WHEN USING STAINLESS STEEL OR HOT-DIP GALVANIZED CONNECTORS, THE CONNECTORS AND FASTENERS SHALL BE OF THE SAME MATERIAL.

2. EXPOSED ENVIRONMENT

ALL HARDWARE (INCLUDING CONNECTORS) IN CONTACT WITH PRESSURE TREATED WOOD IN AN EXPOSED OR POTENTIAL TO BE EXPOSED ENVIRONMENT (HAVING POTENTIAL FOR WIND BLOWN RAIN TO REACH) SHALL BE STAINLESS STEEL.

8.0 MECHANICAL AND EPOXY FASTENERS

A. MECHANICAL FASTENERS (PRE-DRILLED ANCHORS)

1. TYPICAL MECHANICAL ANCHORS WHICH ARE INSTALLED IN CONCRETE SHALL BE AS MANUFACTURED BY THE SIMPSON, INC. AND SHALL BE INSTALLED IN CONFORMANCE WITH THE MANUFACTURERS GUIDELINES AND PER ICC REPORT ESR-1771 FOR WEDGE ANCHORS OR PER ICC REPORT ESR-2713 FOR SCREW TYPE ANCHORS OR APPROVED EQUALS.
2. SPECIAL CARE SHALL BE TAKEN DURING THE DRILLING / INSTALLATION OF FASTENERS WITHIN POST-TENSIONED CONCRETE. ANCHORS SHALL BE INSTALLED IN SUCH A MANNER SO AS NOT TO INTERFERE WITH / DAMAGE REINFORCEMENT.

B. EPOXY CONNECTIONS (PRE-DRILLED ANCHORS)

1. ADHESIVE ANCHORS SHALL BE OF THE SIZE AND LENGTH AS CALLED OUT ON THE PLANS USING THE SIMPSON SET-XP ADHESIVE ANCHORING SYSTEM PER ICC REPORT ESR-2508 OR APPROVED EQUAL. ADHESIVE ANCHORS SHALL BE INSTALLED PER THE MANUFACTURERS SPECIFICATIONS.
2. ALL EPOXY ANCHORS OR FASTENERS REQUIRE SPECIAL INSPECTION.
3. ANCHORS SHALL BE INSTALLED IN SUCH A MANNER SO AS NOT TO INTERFERE WITH / DAMAGE REINFORCEMENT.

9.0 SPECIAL INSPECTIONS:

SPECIAL INSPECTIONS SHALL CONFORM TO SECTION 1704 OF THE 2018 IBC AND ARE REQUIRED DURING THE FOLLOWING:

A. THE EXCAVATION OF FOOTINGS PRIOR TO CONCRETE PLACEMENT,

B. THE TAKING OF CONCRETE TEST SPECIMENS. SEE PARAGRAPH 3.2, NOTE 4 FOR EXCEPTION WITH f'c GREATER THAN 2500 PSI.

C. THE PLACEMENT OF REINFORCING STEEL OF ALL STRUCTURAL FOOTINGS, COLUMNS, WALLS, SLABS AND APPENDAGES,

D. THE CONSTRUCTION OF THE LATERAL WOOD SYSTEM TO VERIFY APPROPRIATE ELEMENTS, NAILING, HARDWARE & CONNECTIONS PRIOR TO FINAL APPROVAL.

E. ALL EPOXY DOWELED APPLICATIONS.

PRIOR TO CONSTRUCTION THE CONTRACTOR SHALL BE RESPONSIBLE TO COORDINATE A SCHEDULE OF REQUIRED INSPECTIONS AND SHALL SUBMIT THIS SCHEDULE TO THE ARCHITECT AND ENGINEER FOR APPROVAL.

INSPECTION IS INSPECTION PERFORMED BY THE BUILDING OFFICIAL AT VARIOUS STAGES OF A PROJECT AS OUTLINED IN IBC SECTION 109 TO ENSURE COMPLIANCE TO THE BUILDING CODE.

SPECIAL INSPECTION SHALL BE DONE BY AN INDEPENDENT 3RD PARTY INSPECTOR BY OWNER. WHERE IBC CHAPTER 17 (REF SECTION 1704) REQUIRES SPECIAL EXPERTISE TO ENSURE COMPLIANCE WITH THE APPROVED CONSTRUCTION DOCUMENTS.

STRUCTURAL OBSERVATION SHALL BE PERFORMED BY A REGISTERED DESIGN PROFESSIONAL FOR GENERAL CONFORMANCE WITH THE APPROVED CONSTRUCTION DOCUMENTS AS DEFINED IN IBC SECTION 1702. STRUCTURAL OBSERVATION DOES NOT INCLUDE OR WAIVE THE RESPONSIBILITY FOR INSPECTION AS REQUIRED BY IBC.

10.0 MISCELLANEOUS

VERIFY ALL DIMENSIONS AND CONDITIONS PRIOR TO PROCEEDING. PROVIDE ERECTION BRACING AS NECESSARY UNTIL PERMANENT SUPPORT AND STIFFNESS ARE INSTALLED. REFER TO ARCHITECTURAL PLANS FOR WALL OPENING, ARCHITECTURAL TREATMENT AND DIMENSIONS NOT SHOWN. REFER TO MECHANICAL AND ELECTRICAL PLANS FOR SIZE AND LOCATION OF ALL OPENINGS FOR DUCTS, PIPES, CONDUITS, ETC., NOT SHOWN.

Special Inspection required per Chapter 17 of the 2018 IBC - SUBMIT REPORTS TO INSPECTORS WITH THE CITY OF PUYALLUP

Abbreviations

AB.	ANCHOR BOLT
AGGR.	AGGREGATE
ALT.	ALTERNATE
APPROX.	APPROXIMATE
ARCH.	ARCHITECTURAL
BD.	BOARD
BLDG.	BUILDING
BLK	BLOCK
BLK'G.	BLOCKING
BM.	BEAM
BOT.	BOTTOM
BTWN.	BETWEEN
C.J.	CONTROL JT.
CLR.	CLEAR
C.M.U.	CONCRETE MASONRY UNIT
COL.	COLUMN
CONC.	CONCRETE
CONN.	CONNECTION
CONSTR.	CONSTRUCTION
CONT.	CONTINUOUS
CSE	COMPONENTS STRUCTURAL ENGR
DEG.	DEGREE
DET./DTL.	DETAIL
DIAG.	DIAGONAL
DIA. ø	DIAMETER
DN.	DOWN
DWG.	DRAWING
(E)	EXISTING
EA.	EACH
E.J.	EXPANSION JOINT
E.I.F.S.	EXTERIOR INSULATION AND FINISH SYSTEM
EL. ELEV.	ELEVATION
ELEV.	ELEVATION
EQ.	EQUAL
EQUIP.	EQUIPMENT
E.W.	EACH WAY
EXP.	EXPANSION
EXT.	EXTERIOR
F.D.	FLOOR DRAIN
FDN.	FOUNDATION
F.F.	FINSH FLOOR
FIN.	FINISH
FLR.	FLOOR
FND.	FOUNDATION
F.O.B.	FACE OF BRICK
F.O.C.	FACE OF CONCRETE
F.S.	FULL SIZE
FT.	FOOT OR FEET
FTG.	FOOTING
FURR.	FURRING
GA.	GAUGE
GALV.	GALVANIZED
GR.	GRADE
GYP.	GYPSUM
GYP. BD.	GYPSUM BOARD
HT.	HEIGHT
HVAC	HEATING, VENT AND AIR CONDITIONING
I.D.	INSIDE DIAMETER
INSUL.	INSULATION
INT.	INTERIOR
JNT.	JOINT
JST.	JOIST
MAX.	MAXIMUM
MFR.	MANUFACTURER
MIN.	MINIMUM
MISC.	MISCELLANEOUS
M.O.	MASONRY OPENING
MTL.	METAL
NO.	NUMBER
N.T.S.	NOT TO SCALE
O.C.	ON CENTER
O.D.	OUTSIDE DIAMETER
OH.	OVERHEAD
OPG.	OPENING
OPP.	OPPOSITE
PCT.	PRE-CAST
P.L.	PROPERTY LINE
PLYWD.	PLYWOOD
R.D.	ROOF DRAIN
RE:	REFER TO ...
REINF.	REINFORCED
REQ'D.	REQUIRED
RM	ROOM
R.O.	ROUGH OPENING
SCHED.	SCHEDULE
SECT.	SECTION
SER	STRUCTURAL ENGINEER OR RECORD
S.F.	SQUARE FOOT
SHT.	SHEET
SIM.	SIMILAR
SPEC.	SPECIFICATION
SQ.	SQUARE
S.S.	STAINLESS STEEL
STAGG.	STAGGERED
STD.	STANDARD
STIFF	STIFFENER
STL.	STEEL
STRUC.	STRUCTURAL
TR	TREAD
T & B	TOP AND BOTTOM
T & G	TONGUE & GROOVE
THK.	THICK
T/	TOP OF
TYP.	TYPICAL
U.N.O.	UNLESS NOTED OTHERWISE
VER	VERIFY
VERT.	VERTICAL
W/	WITH
W/O	WITHOUT
℄	CENTERLINE
℗	PLATE

Sheet Index

Sheet	Sheet Contents	Revisions*
S1.0	Structural Notes	△1 △2
S1.1	Special Inspection Tables	
S1.2	Shearwall & Holdown Tables & Details	
S1.3	Holdown Details	
S2.0	Foundation & Basement Floor Framing Plans - Bldg A	△1 △2
S2.1	2nd & 3rd Floor Framing Plans - Bldg A	△1
S2.2	Roof Framing Plan & Notes - Bldg A	△1
S2.3	Foundation & Basement Floor Framing Plans - Bldg B	△1
S2.4	2nd & 3rd Floor Framing Plans - Bldg B	△1
S2.5	Roof Framing Plan & Notes - Bldg B	△1
S2.6	Foundation & 2nd Floor Framing Plans - Bldg C	△1 △2
S2.7	3rd Floor & Roof Framing Plans - Bldg C	△1
S2.8	Foundation & Basement Floor Framing Plans - Bldg D	△1 △2
S2.9	2nd & 3rd Floor Framing Plans - Bldg D	△1
S2.10	Roof Framing Plan & Notes - Bldg D	△1
S2.11	Foundation & Basement Floor Framing Plans - Bldg E	△1 △2
S2.12	2nd & 3rd Floor Framing Plans - Bldg E	△1
S2.13	Roof Framing Plan & Notes - Bldg E	△1
S2.14	Foundation & Basement Floor Framing Plans - Bldg F	△1 △2
S2.15	2nd & 3rd Floor Framing Plans - Bldg F	△1
S2.16	Roof Framing Plan & Notes - Bldg F	△1
S2.17	Foundation & 2nd Floor Framing Plans - Bldg G	△1 △2
S2.18	3rd Floor & Roof Framing Plans - Bldg G	△1
S2.19	Foundation & 2nd Floor Framing Plans - Bldg H	△1 △2
S2.20	3rd Floor & Roof Framing Plans - Bldg H	△1
S2.21	Foundation Plan - Recreation Building	△1 △2
S2.22	Roof Framing Plan - Recreation Building	△1 △2
S2.23	Foundation Plans - Trash Enclosure & Recycle Centers	△1
S3.0	Concrete Details	
S3.1	Concrete Details	
S4.0	Framing Details	△1
S4.1	Framing Details	△1
S5.0	Framing Details	△1
S5.1	Framing Details	△1
TOTAL NUMBER OF SHEETS		34
* LATEST INDIVIDUAL SHEET REVISION ISSUED		

City of Puyallup Development & Permitting Services ISSUED PERMIT
Building | Planning | Engineering | Public Works | Fire | Traffic

THOMAS LANE CHASE, STATE OF WASHINGTON, 29006, REGISTERED PROFESSIONAL ENGINEER
4-24-25

THOMAS L. CHASE, PE
MARTIN R. OMAN, PE, SE
OLEG G. KONDRATYUK, PE

Revisions to this sheet:
△1 8-30-24 PERMIT CORRECTIONS & OWNER CHANGES
△2 4-24-25 PERMIT CORRECTIONS & OWNER CHANGES

PRMU20240279

Bradley Heights Apartments
202 27th Ave SE
Puyallup, Washington

Solutions 4 Inc. Structures
A Structural Engineering Corporation
Puyallup, Washington 98374
Ph 253-314-9822
www.solutions4structures.com

PROJECT NO. : 23.007
DESIGNED BY : TLC, OGK, MRO
DRAWN BY : RSO
ISSUE DATE : 2-20-24
LATEST REV. OF DWG. SET : △2 4-24-25

SUBMITTAL SET ONLY NOT FOR CONSTRUCTION
THESE DRAWINGS ARE SUBJECT TO REVISIONS PENDING LOCAL JURISDICTIONAL REVIEW.

S1.0

CAD FILE: F:\Projects\2023 Projects\23.007 Bradley Heights\Drawings\S1.0.dwg PLOT DATE/TIME: 4/25/2025 - 1:49pm THANK YOU FOR USING SOLUTIONS 4 STRUCTURES

STRUCTURAL NOTES-TABLES

WIND PRESSURE TABLE FOR COMPONENTS & CLADDING (ASD)

ROOF SURFACES						
EFFECTIVE WIND AREA	POSITIVE PRESSURE (PSF)			NEGATIVE PRESSURE (PSF)		
	ZONE[2]					
	1	2	3	1	2	3
10 SF	7.80	7.80	7.80	−12.39	−21.56	−31.89
20 SF	7.04	7.04	7.04	−12.01	−19.65	−29.59
50 SF	6.27	6.27	6.27	−11.62	−17.74	−27.30
100 SF	5.51	5.51	5.51	−11.24	−15.83	−25.01
500 SF	5.51	5.51	5.51	−11.24	−15.83	−25.01

WALL SURFACES				
EFFECTIVE WIND AREA	POSITIVE PRESSURE (PSF)		NEGATIVE PRESSURE (PSF)	
	ZONE[2]			
	4	5	4	5
10 SF	12.18	12.18	−13.21	−16.31
20 SF	11.56	11.56	−12.59	−15.07
50 SF	10.94	10.94	−11.98	−13.83
100 SF	10.32	10.32	−11.36	−12.57
500 SF	9.08	9.08	−10.12	−10.12

1. NET WIND PRESSURES AT ROOF SURFACES = VALUE FROM TABLE ABOVE +2/3 DEAD LOAD (DEAD LOAD REDUCES NEGATIVE PRESSURE + ADDS TO POSITIVE PRESSURES)
2. ZONES ARE DEFINED BY FIGURE 30.6-1 ASCE/SE1 07-10 FOR ROOF AND WALL ELEMENTS

2018 International Building Code – Statement of Special Inspection

SOIL & FOUNDATIONS

MATERIAL/ TYPE INSPECTION	IBC CODE REFERENCE	REFERENCE STANDARD	FREQUENCY APPLICABLE TO THIS PROJECT: CONT.	PERIODIC	REQUIRED	SCOPE OF SERVICE
Site Preparation	Table 1705.6 Item 5	–	–	X	N/A	Inspection to determine that the site has been prepared in accordance with the approved soils or geotechnical report.
Prepared Fill – During Fill Preparation	Table 1705.6 Item 4	–	X	–	YES	Inspection to determine that the materials being used and maximum lift thicknesses comply with the approved report as specified in Section 1804.2.
Evaluation of in-place Density	Table 1705.6 Item 3	–		X	YES	Tests to determine, at the approved frequency, that the in-place dry density of the compacted fill complies with the approved report.
Footings and Foundations	1805.1 – 1805.9 Table 1705.6 Item 1	–	–	X	YES	Confirm soils suitable for the design allowable soil bearing pressure are present at bearing grade. Confirm the footing dimensions are as specified on the project plans.
Foundation Depth	Table 1705.6 Table 1705.6 Item 2	–	–	X	YES	Confirm excavation are extended to proper depth and have reached proper materials.

2018 International Building Code – Statement of Special Inspection

CONCRETE CONSTRUCTION

MATERIAL/ TYPE INSPECTION	IBC CODE REFERENCE	REFERENCE STANDARD	FREQUENCY APPLICABLE TO THIS PROJECT: CONT.	PERIODIC	REQUIRED	SCOPE OF SERVICE
Materials	1705.3.1, Table 1705.3 Item 1	Applicable ASTM material spec.; AISC 360, Section A3.3	–	X	YES	Manufacturer's Certificates of Compliance or Tests per Chapter 3 of ACI 318, per ASTM A 706, and per 1705.3.1
Installation of Reinforcing Steel	1910.4 Table 1705.3 Item 1	ACI 318:3.5; 7.1 – 7.7	–	X	YES	Inspection to confirm compliance with details shown on approved Construction Documents, Shop Drawings, ACI 318 and Code Section 1910.4
Welding of Reinforcing Steel	Table 1705.3 Item 2	AWS D1.4, ACI 318:3.5.2	–	–	N/A	Observation of reinforcing steel welding in accordance with Table 1705.2.2, Item 2, (see attached steel construction table).
Bolt Installation	1908.5, 1901.1 Table 1705.3 Item 3	ACI 318: 8.1.3, 21.2.8	X	–	YES	Observation of anchor bolts to be installed in concrete prior to and during placement of concrete where allowable loads have been increased.
Formwork	Table 1705.3 Item 12	ACI 318:6.1.1	–	X	YES	Inspection for compliance with ACI 318, Section 6.1, 6.2, for shape, location and dimensions of concrete member being formed.
Concrete Strength	1910.10, Table 1705.3 Item 6	ASTM C 172, ASTM C 31, ACI 318:5.6, 5.8	–	X	NO	Evaluation of Concrete strength in accordance with ACI 318, Section 5.6 and in accordance with the requirements of IBC 1905.6.
Concrete Mixes	1904.2, 1910.2, 1910.3 Table 1705.3 Item 5	ACI 318: 4, 5.2–5.4	–	X	YES	Inspection for use of proper mix proportions and techniques, ACI 318, Chapter 4, Sections 5.2 – 5.4.
–	–		–	–	–	–
Concrete Sampling	1910.10 Table 1705.3 Item 6	ASTM C 172, ASTM C 31, ACI 318:5.6, 5.8	X	–	MO	
Concrete Placement	1910.6, 1910.7, 1910.8, Table 1705.3 Item 7	ACI 318:5.9, 5.10	X	–	YES	Inspection for proper application techniques; ACI 318, Sections 5.9 and 5.10
Curing Temperatures and Techniques	1910.9 Table 1705.3 Item 8	ACI 318: 5.11–5.13	–	X	NO	Inspection for maintenance of curing temperatures and techniques; ACI 318, Sections 5.11, 5.12 and 5.13.
Prestressed Concrete: Application Prestressing Forces	Table 1705.3 Item 9a	ACI 318: 18.20, ACI 18.18.4	X	–	NO	Field inspections of precast concrete members in accordance with ACI 318, Section 18.20.
Prestressed Concrete: Grouting of unbonded prestressing tendons in seismic-force-resisting system	Table 1705.3 Item 9b	ACI 318: 18.20, ACI 18.18.4	X	–	NO	Field inspections of precast concrete members in accordance with ACI 318, Chapter 18.18.4.
Manufacture of Precast Concrete	1704.2.1	–	–	X	NO	Certificate from Independent Agency and current agreement for periodic (minimum 6 month intervals) in-plant quality assurance inspections.
Erection of Precast Concrete	Table 1705.3 Item 10	ACI 318: 16	–	X	NO	Field inspections of precast concrete members in accordance with ACI 318, Chapter 16.
Post Tensioning	Table 1705.3 Item 11	ACI 318: 6.2	–	X	NO	Verification of in-situ concrete strength, prior to stressing of tendons in post-tensioned concrete and prior to removal of shores and forms for beams and structural slabs in accordance with ACI 318, Section, 6.2.
Post Installed Anchors	1909.1, Table 1705.3 Item 11	ACI 318: 3.8.6, 8.1.3, 21.1.8	–	X	YES	Verification of anchors post installed in hardened concrete members.

2018 International Building Code – Statement of Special Inspection

WOOD CONSTRUCTION

MATERIAL/ TYPE INSPECTION	IBC CODE REFERENCE	REFERENCE STANDARD	FREQUENCY APPLICABLE TO THIS PROJECT: CONT.	PERIODIC	REQUIRED	SCOPE OF SERVICE
Fabrication – Inspection of Fabricator's Quality Control Procedures	1704.2.5	–	–	X	YES	Certificate from Independent Agency and current agreement for periodic (minimum 6 month intervals) in-plant quality assurance inspections.

2018 International Building Code – Statement of Special Inspection

SPECIAL INSPECTIONS FOR SEISMIC RESISTANCE

MATERIAL/ TYPE INSPECTION	IBC CODE REFERENCE	REFERENCE STANDARD	FREQUENCY APPLICABLE TO THIS PROJECT: CONT.	PERIODIC	REQUIRED	SCOPE OF SERVICE
Structural Steel	1705.11.1	AISC 341	X	–	N/A	Observation of structural welding in accordance with AISC Seismic. Not required for 5/16" single pass fillet welds or welding of metal deck.
Structural Wood: Inspection of field gluing operations of elements of the seismic force resisting system.	1705.11.2	–	X	–	N/A	Inspection of field gluing operations of elements of the seismic force resisting system.
Structural Wood: Inspection of nailing, bolting, anchoring and other fastening components the seismic force resisting system, including drag struts, braces and hold-downs.	1705.11.2	–	–	X	YES	Inspection of nailing, bolting, anchoring and other fastening components within the seismic force resisting system, including drag struts, braces and hold-downs. Not required for nailing o.c. spacing greater that 4" o.c.
Cold-formed Steel Framing	1705.11.3	–	–	X	NO	Inspection of welding operations of elements of the seismic force resisting system.
Cold-formed Steel Framing	1705.11.3	–	–	X	NO	Inspection of screw attachments, bolting, anchoring and other fastening components within the seismic force resisting system, including struts, braces and hold-downs.

2018 International Building Code – Statement of Special Inspection

STRUCTURAL: OBSERVATIONS

MATERIAL/ TYPE INSPECTION	IBC CODE REFERENCE	REFERENCE STANDARD	FREQUENCY APPLICABLE TO THIS PROJECT: CONT.	PERIODIC	REQUIRED	SCOPE OF SERVICE
Strucutral Observations	1704.5	–	–	X	If required by jurisdiction	Structural observations to be preformed to observe general conformance to the construction documents.

THOMAS L. CHASE, PE
MARTIN R. OMAN, PE, SE
OLEG G. KONDRATYUK, PE

Revisions to this sheet:

PRMU20240279

Solutions 4 Structures
A Structural Engineering Corporation
Puyallup, Washington 98374
Ph 253-314-9822
www.solutions4structures.com

Bradley Heights Apartments
202 27th Ave SE
Puyallup, Washington

PROJECT NO. : 23.007
DESIGNED BY : TLC, OGK, MRO
DRAWN BY : RSO
ISSUE DATE : 2-20-24
LATEST REV. OF DWG. SET : 4-24-25

SUBMITTAL SET ONLY NOT FOR CONSTRUCTION
THESE DRAWINGS ARE SUBJECT TO REVISIONS PENDING LOCAL JURISDICTIONAL REVIEW.

S1.1

CAD FILE: F:\Projects\2023 Projects\23.007 Bradley Heights\Drawings\S1.1.dwg PLOT DATE/TIME: 4/23/2025 – 11:22am THANK YOU FOR USING SOLUTIONS 4 STRUCTURES

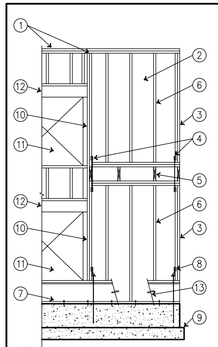

1. DIAPHRAGM BOUNDARY NAILING
2. PLYWOOD OR OSB, ONE OR TWO SIDES – SEE SCHEDULE.
3. WALL CHORD MEMBER – SEE SHEAR WALL SCHEDULE
4. AT SECOND STORY CONDITION PROVIDE TIES PER PLAN
5. FLOOR JOISTS – SEE PLAN
6. 2x STUDS AT 16" O.C. AT ALL SHEAR WALLS U.N.O.
7. SILL PLATE AND ANCHOR BOLTS PER SCHEDULE
8. HOLDOWNS AT SHEAR WALL ENDS AS SHOWN ON PLAN
9. FOOTING SIZE AND REINFORCING PER PLAN & DETAILS
10. DOUBLE STUD OR COLUMN – SEE PLAN
11. OPENING
12. HEADER – SEE PLAN
13. RIM JOIST OR S.O.G. – SEE PLAN, EDGE NAIL DIRECTLY TO P.T. SILL AT S.O.G. LOCATIONS.

10 TYPICAL SHEAR WALL ELEVATION

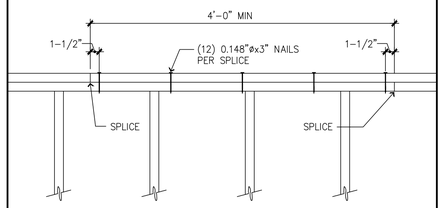

NOTE:
WHERE PLATE DISCONTINUITIES ARE CREATED BY BEAMS & PIPES, ETC. STRAP W/ (1)–SIMPSON CS16 x 28" W/ (13)–8d NAILS EA END AT EACH PLATE NOT ACHIEVING 4'-0" LAP UNLESS NOTED OTHERWISE

7 TYPICAL TOP CHORD SPLICE

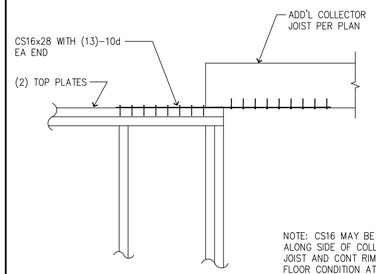

NOTE: CS16 MAY BE PLACED ALONG SIDE OF COLLECTOR JOIST AND CONT RIM AT FLOOR CONDITION AT CONTRACTORS OPTION.

6 STRAP @ BEAM TO TOP PLATE

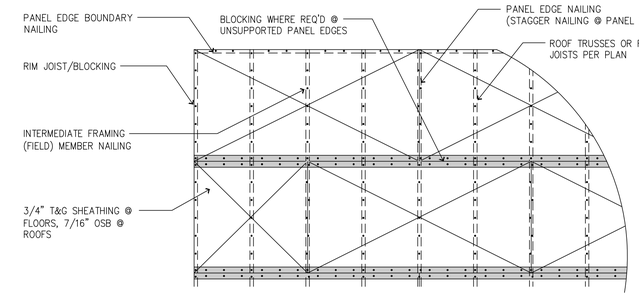

NOTES:

1) PROVIDE APA APPROVED GLUE, NAIL ALL SHEATHING TO JOISTS PER GENERAL NOTES ON S1.0.
2) STAGGER PANELS TO OFFSET JOINTS AS SHOWN.
3) WHERE BLOCKED DIAPHRAGM IS REQUIRED, PROVIDE TIMBER BLKG 2x4 FLAT (MIN) BELOW SHEATHING @ UNSUPPORTED EDGES W/ EDGE NAILING OR PROVIDE 3" x 27mil (22GA) x CONT STEEL STRAP W/ #8 SCREWS @ 6" O.C. TO EA UNSUPPORTED PANEL EDGE PER DETAIL 7/S1.3.

3 TYPICAL HORIZONTAL SHEATHING DIAPHRAGM LAYOUT

N.T.S.

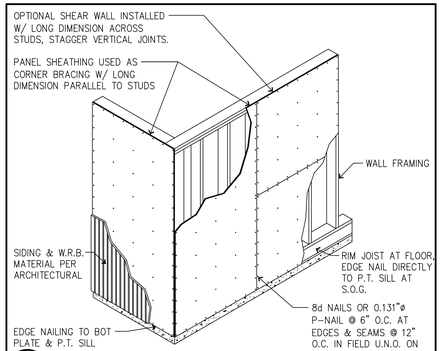

9 TYPICAL WALL SHEATHING

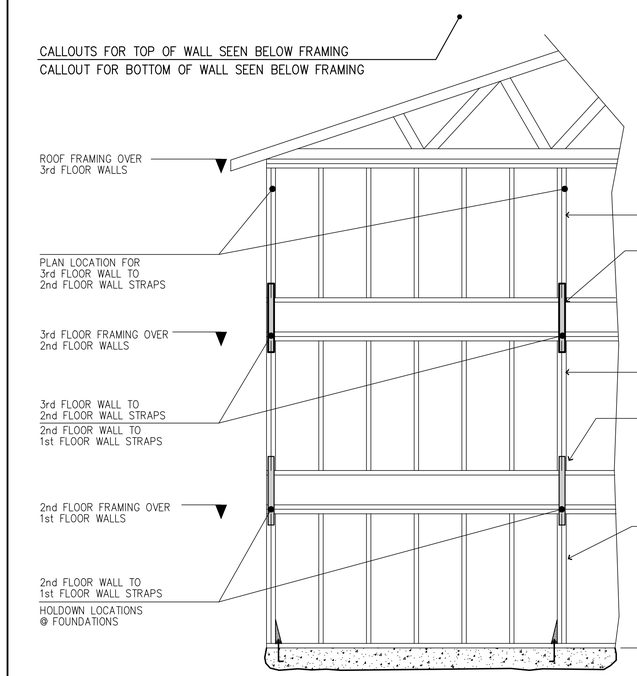

MSTC40
MSTC52

MSTC40 FROM 3rd FLOOR WALL TO 2nd FLOOR WALL & MSTC52 2nd FLOOR WALL TO 1st FLOOR WALL

EXAMPLE @ 3RD FLOOR FRAMING PLAN

NOTE:
UPPER TO LOWER WALL STRAP AND HOLDOWN BELOW ARE TO BE ATTACHED TO THE SAME FRAMING MEMBERS UNLESS SPECIFICALLY DETAILED OTHERWISE

5 UPPER TO LOWER WALL STRAP/HOLDOWN KEY

HOLDOWN TABLE

MARK	BOUNDARY ELEMENT 2x4 WALL	BOUNDARY ELEMENT 2x6 WALL	TOTAL FASTENERS	ANCHOR DIAMETER	ANCHOR EMBEDMENT	MIN EDGE DISTANCE WITHOUT ADD'L REINF
MST37	4x4 #2 HF	4x6 #2 HF	(20) 16d	N/A	N/A	N/A
MST48	4x4 #2 HF	4x6 #2 HF	(32) 16d	N/A	N/A	N/A
(2)MST48	4x6 #2 HF	6x6 #2 DF	(46) 16d	N/A	N/A	N/A
MST60	4x6 #2 HF	4x6 #2 HF	(64) 16d	N/A	N/A	N/A
(2)MST60	4x6 #2 HF	6x6 #2 DF	PER MFR	N/A	N/A	N/A
HDU2	4x4 #2 HF	4x6 #2 HF	PER MFR	5/8"	8"	4"
HDU4	4x4 #2 HF	4x6 #2 HF	PER MFR	5/8"	8"	4"
HDU5	4x6 #2 HF	4x6 #2 HF	PER MFR	5/8"	8"	8"
HDU8	4x6 #2 DF	6x6 #2 DF	PER MFR	7/8"	12"	8"
HDU11	4x6 #2 DF	6x6 #2 DF	PER MFR	1"	12"	12"
HDU14	**4x8 #2 DF**	6x6 #2 DF	PER MFR	1"	12"	16"

NOTES:

1) STRAP HOLDOWNS MAY BE APPLIED DIRECTLY TO BOUNDARY MEMBER ON OPPOSITE SIDE OF SHEATHING OR APPLIED DIRECTLY OVER PWD/OSB SHEATHING. DO NOT LOCATE STRAPS UNDER WOOD SHEATHING OF ANY TYPE OR OVER GYPSUM SHEATHING. (DO NOT INSTALL MSTC TYPE STRAPS OVER SHEATHING, SEE 4/S1.3)
2) NAIL SHEATHING PER SHEARWALL TABLE TO EACH BOUNDARY ELEMENT PER TABLE ABOVE.
3) ALIGN FLOOR TO FLOOR STRAPS WITH HOLDOWNS AT FOUNDATION, TYP. (SEE DETAIL 5/S1.2)
4) HOLDOWNS/STRAPS MUST BE ATTACHED TO FULL HEIGHT MEMBERS UNLESS NOTED OTHERWISE. BOUNDARY ELEMENTS ARE IN ADDITION TO TRIMMER/BEARING STUDS CALLED OUT ON PLAN. (SEE DETAILS 1,2 & 3/S1.3)
5) ANCHOR BOLTS SHALL BE CAST IN PLACE AND ALL ANCHORS EXCEPT HDU2 AND HDU4 REQUIRE ADDITIONAL REBAR IF EMBEDDED IN STEMWALLS OR IF MIN EDGE DISTANCE IS LESS THAN AS NOTED USE A STANDARD WASHER WITH A STANDARD NUT ON EACH SIDE AT BOTTOM OF ANCHOR. ADDITIONAL REINFORCEMENT SHALL BE PER DETAILS 1,2, & 3/S3.1.
6) THREADED RODS/ANCHORS ARE ASTM A307 OR ASTM F1554 U.N.O.
7) STRAPS/HOLDOWNS SHALL BE INSTALLED WITH THE FASTENERS SPECIFIED BY THE MANUFACTURER TO ACHIEVE THE MAXIMUM TABULATED LOAD & AS INDICATED IN THE TABLE ABOVE.
8) INSTALL HALF OF SPECIFIED FASTENERS EACH END OF STRAPS PER SIMPSON STRONGTIE.
9) SEE DETAIL 4/S1.3 FOR MSTC – HOLDOWN STRAPS FROM SHEARWALL TO BEAM & DETAIL 6/S1.3 FOR MSTC – HOLDOWN STRAPS @ END OF BEAM TO POST/COLUMN. (*) SYMBOL AT END OF MSTC STRAP CALLOUT (i.e. (2)MSTC48B3*) INDICATES STRAP IS INVERTED AND ATTACHES END OF BEAM TO POST BELOW PER 6/S1.3

2

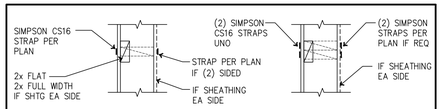

SINGLE STRAP CONNECTION
SECTION A

DOUBLE STRAP CONNECTION
SECTION B

CS16 STRAP MIN UNO PER PLAN @ TOP & BOTTOM OF WINDOW TO EXTEND FULL WIDTH OF SHEARWALL. STRAP TO BE APPLIED OVER THE SHEARWALL SHEATHING TO 2x_ BLKG AT WINDOW HEAD/SILL PLATES TYP. SEE SECTION A FOR SINGLE STRAP (1 OR 2 SIDED). WHERE (2) STRAPS IS CALLED OUT ON PLAN PROVIDE STRAPS PER PLAN SIDE BY SIDE @ HEAD & SILL OF OPENING FULL WIDTH OF SHEARWALL SEE SECTION B.

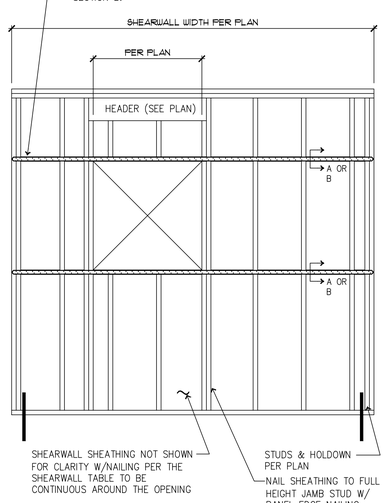

8 SPECIAL SHEARWALL WITH OPENINGS

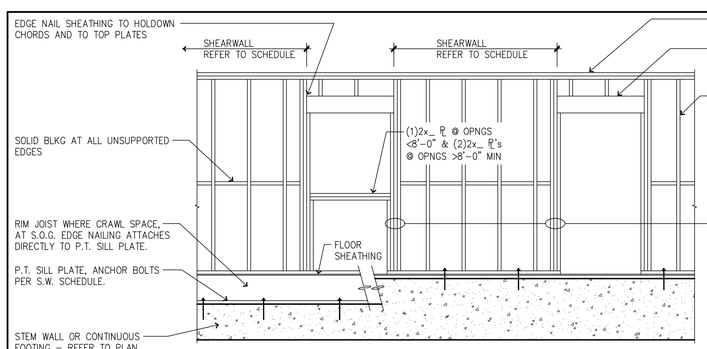

NOTES:
1. MAINTAIN 3/8" MIN EDGE DISTANCE FROM PLYWOOD SHEATHING TO NAILS
2. EDGE NAILING TO BE APPLIED TO ALL PANEL EDGES
3. PLACE FACE GRAIN OF PLYWOOD HORIZONTAL
4. FOR NON–SHEAR CHORD WALLS, USE SINGLE KING STUDS.

4 TYPICAL STUD AND SHEAR WALL

SHEARWALL COMPONENT TABLE

MARK	MARK 14	COMPONENTS	1/2" A.B. PL TO CONCRETE SPACING (IN)	5/8" A.B. PL TO CONCRETE SPACING (IN)	10d COMMON PL TO PL SPACING (IN)	SIMPSON A35 CLIP ANGLE SPACING (IN)	SIMPSON LTP4 CLIP ANGLE SPACING (IN)
W1	W1P	7/16" PWD OR OSB, BLOCKED, W/ 8d NAILS @ 6" O.C. @ PANEL EDGES AND @ 12" O.C. @ FIELD.	47" O.C.	68" O.C.	8.1" O.C.	30" O.C.	29" O.C.
W2	W2P	7/16" PWD OR OSB, BLOCKED, W/ 8d NAILS @ 4" O.C. @ PANEL EDGES AND @ 12" O.C. @ FIELD.	32" O.C.	47" O.C.	5.5" O.C.	20" O.C.	20" O.C.
W3	W3P	7/16" PWD OR OSB, BLOCKED, W/ 8d NAILS @ 3" O.C. @ PANEL EDGES AND @ 12" O.C. @ FIELD. SEE NOTE 2	25" O.C.	36" O.C.	4.3" O.C.	16" O.C.	15" O.C.
W4	W4P	7/16" PWD OR OSB, BLOCKED, W/ 8d NAILS @ 2" O.C. @ PANEL EDGES AND @ 12" O.C. @ FIELD. SEE NOTE 2	19" O.C.	28" O.C.	6.6" (2) ROWS O.C. EA ROW	12" O.C.	12" O.C.
W5	W5P	7/16" PWD OR OSB, BLOCKED, W/ **10d NAILS** @ 2" O.C. @ PANEL EDGES AND @ 12" O.C. @ FIELD. SEE NOTE 2.	16" O.C.	23" O.C.	5.6" (2) ROWS O.C. EA ROW	10" O.C.	10" O.C.
W6	W7P	15/32" PWD OR OSB, (2) LAYERS (ONE EACH SIDE), BLOCKED, W/ **10d NAILS** @ 3" O.C. @ PANEL EDGES AND @ 12" O.C. @ FIELD. SEE NOTE 2, 3 & 15	12" O.C.	18" O.C.	4.3" (2) ROWS O.C. EA ROW	8" O.C.	8" O.C.
W7	W7P	15/32" PWD OR OSB, (2) LAYERS (ONE EACH SIDE), BLOCKED, W/ **10d NAILS** @ 2" O.C. @ PANEL EDGES AND @ 12" O.C. @ FIELD. SEE NOTE 2, 3, & 15	9" O.C.	14" O.C.	3" (2) ROWS O.C. EA ROW STAGGERED	5" O.C.	5" O.C.

NOTES:

1. ALL NAILING PER ANSI/AF & PA SDPWS – 2018 TABLE 4.3A
2. USE 3x_ STUDS AT ALL ABUTTING PANEL EDGES. NAILS SHALL BE STAGGERED WHERE NAILS ARE SPACED AT 2" O.C..
3. IF CALLOUT REQUIRES BLOCKING, SHEATHING MAY BE PLACED WITH THE LONGITUDINAL DIRECTION VERTICAL. STUDS AND PLATES WILL BE CONSIDERED TO ACT AS BLOCKING.
4. WALL SHEATHING CALLED OUT SHALL EXTEND FOR ENTIRE WALL LENGTH AT THAT ELEVATION AND SHALL BE CONTINUOUS AROUND OPENINGS TYPICALLY.
5. 8d NAILS ARE TO BE .131"ø AND 2–1/2" IN LENGTH. 10d NAILS ARE TO BE .148"ø AND A MINIMUM OF 3" IN LENGTH. 16d NAILS ARE TO BE .162"ø AND 3–1/4" IN LENGTH. NAILS SHALL BE INSTALLED SO AS TO NOT SPLIT THE TIMBER FRAMING.
6. SIMPSON A35 OR LTP4 CLIP ANGLES SHALL BE INSTALLED WITH THE APPROPRIATE FASTENERS PER THE MANUFACTURER'S SPECIFICATIONS.
7. USE 3"x3"x0.229" PLATE WASHERS AT ALL ANCHOR BOLTS PER SECTION 4.3.6.4.3
8. SPACING SHOWN ABOVE FOR ANCHOR BOLTS, NAILING AND CLIPS IS MAXIMUM AMOUNT ALLOWED.
9. FRAMING AT SHEARWALLS SHALL BE SPACED NO FARTHER THAN 16" O.C..

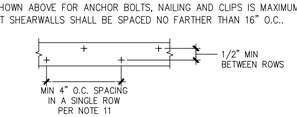

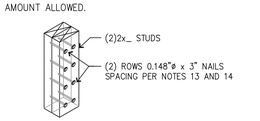

10. MINIMUM NAIL SPACING IN A SINGLE ROW SHALL BE 4 INCHES ON CENTER. USE (2) ROWS IF SPACING LESS THAN THIS. USE 2ND RIM BOARD, RIM JOIST OR BLOCKING WHERE THREE ROWS OF NAILING CALLED OUT.
11. EXTEND SHEATHING UP TO DOUBLE TOP PLATES AND INSTALL NAILS THROUGH SHEATHING INTO UPPER TOP PLATE PER TYPICAL DETAILS. NO PLATE TO PLATE NAILING REQUIRED IN DOUBLE TOP PLATES WITH THIS CONFIGURATION.
12. OPTIONAL TO USE (2) 2x's IN PLACE OF SINGLE 3x IN SHEARWALLS W3, W4 AND W5 W/ STITCH NAILING.
13. (2) ROWS OF 0.148" x 3" STITCH NAILING (2)2x_ STUDS TOGETHER @ 10" O.C. FOR W3 SHW, 8" O.C. FOR W4 SHW & 6" O.C. FOR W5 SHW PER SECTION 4.37 NOTE 4.
14. THE "W_P" INDICATES SHEAR WALL TYPE WITH OPENINGS. PROVIDE SHEATHING AROUND ALL OPENINGS AND ABOVE AND BELOW ALL OPENINGS. PROVIDE HORIZONTAL STRAPS & NAILING AT OPENINGS PER 8/S1.2

1

THOMAS L. CHASE, PE
MARTIN R. OMAN, PE, SE
OLEG G. KONDRATYUK, PE

4-24-25

Revisions to this sheet:

PRMU20240279

Bradley Heights Apartments
202 27th Ave SE
Puyallup, Washington

Solutions 4 Structures Inc.
A Structural Engineering Corporation
Puyallup, Washington 98374
Ph 253-314-9822
www.solutions4structures.com

PROJECT NO. : 23.007
DESIGNED BY : TLC, OGK, MRO
DRAWN BY : RSO
ISSUE DATE : 2-20-24
LATEST REV. OF DWG. SET : △1 4-24-25

SUBMITTAL SET ONLY NOT FOR CONSTRUCTION
THESE DRAWINGS ARE SUBJECT TO REVISIONS PENDING LOCAL JURISDICTIONAL REVIEW.

S1.2

CAD FILE: F:\Projects\2023 Projects\23.007 Bradley Heights\Drawings\S1.2.dwg PLOT DATE/TIME: 4/23/2025 – 11:23am THANK YOU FOR USING SOLUTIONS 4 STRUCTURES

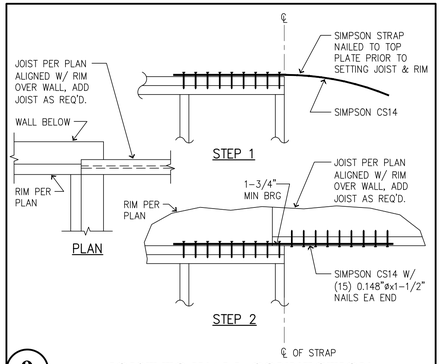

9 **JOIST TO WALL CONNECTION**

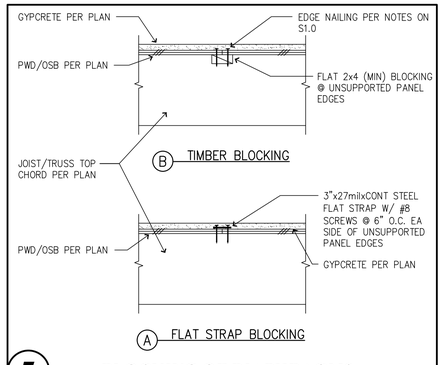

7 **BLOCKING OF DIAPHRAGMS**

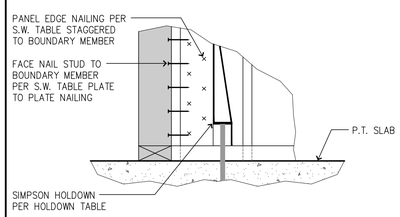

4C **INTERIOR CORNER CONDITION**

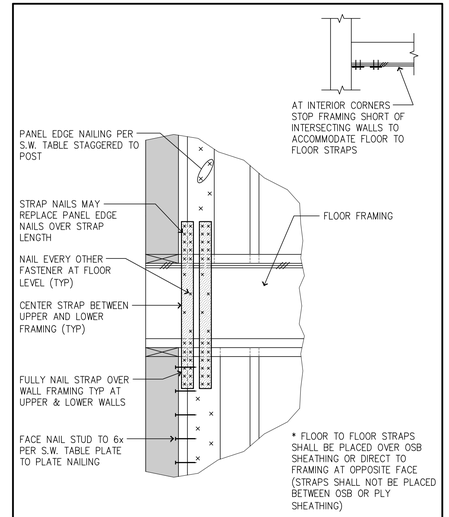

2C **INTERIOR CORNER CONDITION**

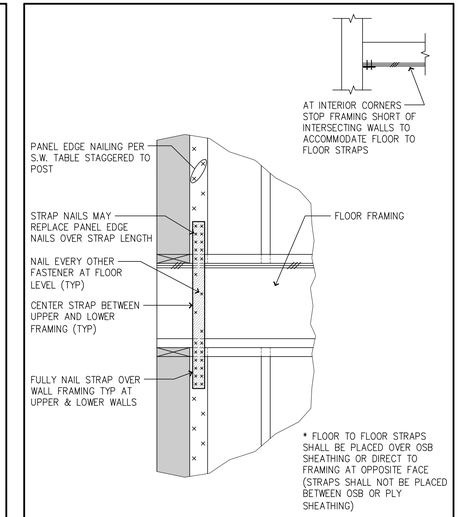

1C **INTERIOR CORNER CONDITION**

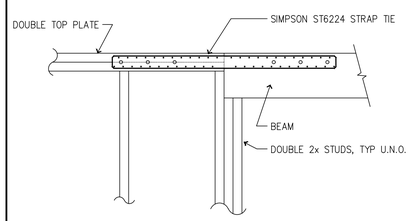

8 **TYPICAL BEAM TO FRAME**

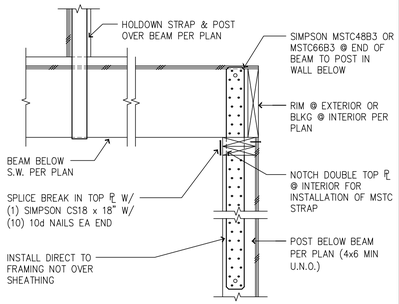

6 **TYPICAL HOLDOWN STRAP FROM BEAM TO POST BELOW**

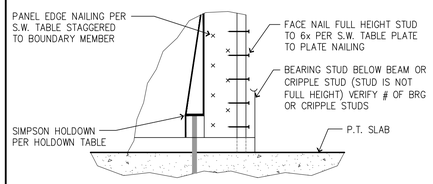

4B **SHEARWALL ADJACENT TO DOOR OR WINDOW**

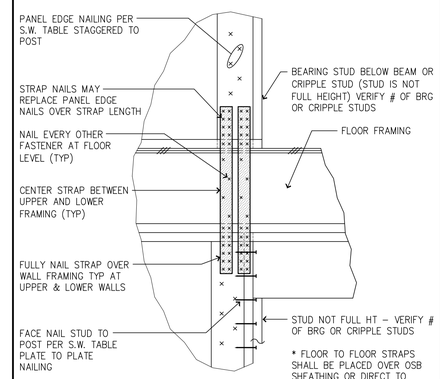

2B **SHEARWALL ADJACENT TO DOOR OR WINDOW**

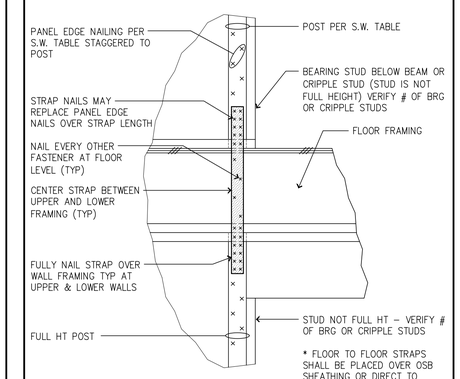

1B **SHEARWALL ADJACENT TO DOOR OR WINDOW**

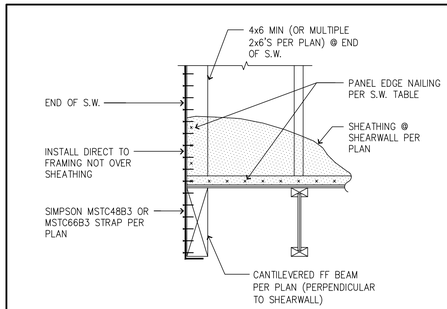

ELEVATION
(RIM NOT SHOWN FOR CLARITY)

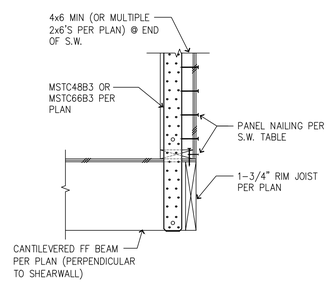

SECTION

5 **HOLDOWN STRAP TO PERPENDICULAR BEAM**

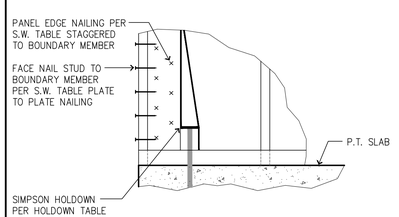

4A **EXTERIOR CORNER CONDITION**

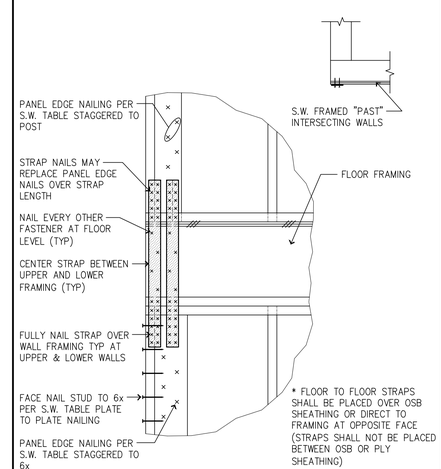

2A **EXTERIOR CORNER CONDITION**

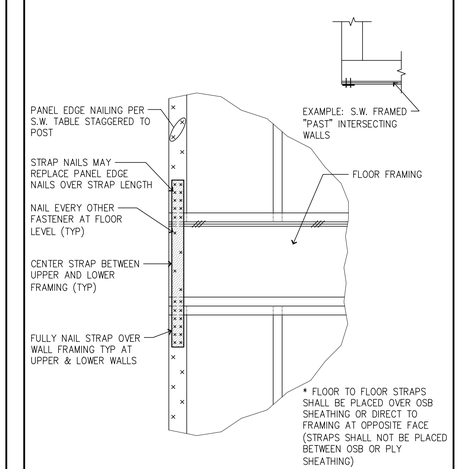

1A **EXTERIOR CORNER CONDITION**

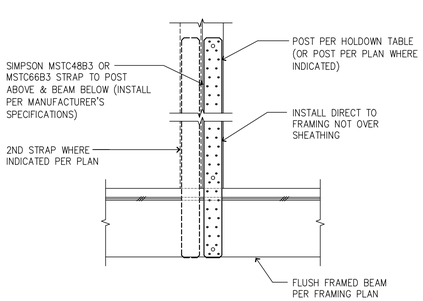

ELEVATION

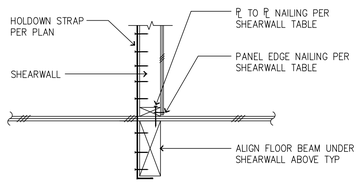

SECTION

4 **TYPICAL HOLDOWN STRAP TO BEAM BELOW**

3 **FLOOR TO FOUNDATION HOLDOWN**

2 **DOUBLE FLOOR TO FLOOR STRAP**

1 **SINGLE FLOOR TO FLOOR STRAP**

Solutions 4 Structures
A Structural Engineering Corporation

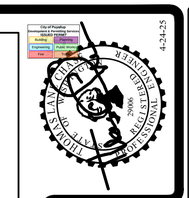

THOMAS L. CHASE, PE
MARTIN R. OMAN, PE, SE
OLEG G. KONDRATYUK, PE

Revisions to this sheet:

PRMU20240279

Bradley Heights Apartments
202 27th Ave SE
Puyallup, Washington

Solutions 4 Structures
A Structural Engineering Corporation
Puyallup, Washington 98374
Ph 253-314-9822
www.solutions4structures.com

PROJECT NO.	: 23.007
DESIGNED BY	: TLC, OGK, MRO
DRAWN BY	: RSO
ISSUE DATE	: 2-20-24
LATEST REV. OF DWG. SET	: 2 4-24-25

SUBMITTAL SET ONLY NOT FOR CONSTRUCTION
THESE DRAWINGS ARE SUBJECT TO REVISIONS PENDING LOCAL JURISDICTIONAL REVIEW.

S1.3

CAD FILE: F:\Projects\2023 Projects\23.007 Bradley Heights\Drawings\S1.3.dwg
PLOT DATE/TIME: 4/23/2025 – 11:24am THANK YOU FOR USING SOLUTIONS 4 STRUCTURES

Solutions 4 Structures A Structural Engineering Corporation

Floor & Roof Framing Notes

1. ROOF AND FLOOR JOIST LOCATIONS ARE SCHEMATICALLY SHOWN ON THE PLANS. IT IS NOT THE INTENT OF THE STRUCTURAL PLANS TO GRAPHICALLY LOCATE ALL FRAMING MEMBERS. THE ARCHITECT SHALL VERIFY THE COMPATIBILITY OF JOIST LAYOUT AND FRAMING W/ MECHANICAL, ELECTRICAL & PLUMBING AND ARCHITECTURAL PLANS. THE CONTRACTOR IS RESPONSIBLE FOR SPACING FRAMING MEMBERS AS NOTED ON THE PLANS AND GENERATING MEMBER LAYOUT FOR SHOP DRAWINGS AND QUANTITY TAKEOFFS.
2. FOR ALL UNITS TYPES SEE WALL STUD SCHEDULE FOR BEARING WALL STUD REQUIREMENTS. ALL OTHER NON-BEARING 2x4 & 2x6 WALLS ARE AT 16" O.C.
3. THE TRUSS AND JOIST MANUFACTURER SHALL VERIFY BEARING COMPATIBILITY (CRUSHING) WITH THE PLATE MATERIAL. TYPICALLY, COMPOSITE BEAMS SHALL BE FULLY BEARING ON 2x_ WALLS. I.E. BREAK RIM OR BLOCKING TO ALLOW FULL BEARING OVER PLATES.
4. PLACE LONG DIRECTION OF ALL OSB SHEETS PERPENDICULAR TO TRUSS/RAFTER OR JOIST DIRECTION, SEE DETAIL 3/S1.2. FLOOR SHEATHING IS TO BE CONTINUOUS FROM UNIT TO UNIT. TYPICAL NAILING AT FLOOR AND ROOF DIAPHRAGMS IS PROVIDED IN THE GENERAL STRUCTURAL NOTES ON SHEETS S1.0.
5. W- DENOTES THE SHEARWALL TYPE, SEE THE SHEARWALL TABLE ON SHEET S1.2 ▬▬ INDICATES SHEARWALL LOCATION, THE CALLOUTS ON THE SHEARWALL TABLE APPLY ONLY ALONG THE LENGTH OF WALL SHOWN SHADED. PROVIDE SOLID BLOCKING IN FLOOR SPACE BELOW PERPENDICULAR SHEARWALLS.
   W_P INDICATES SHEAR WALL TYPE WITH OPENINGS. PROVIDE SHEATHING AROUND ALL OPENINGS AND ABOVE AND BELOW ALL OPENINGS. PROVIDE HORIZONTAL STRAPS & NAILING AT OPENINGS PER 8/S1.2
6. THE DOUBLE TOP PLATE IS TO BE CONTINUOUS ALONG ALL EXTERIOR WALLS AND AT ALL WALL LINES CONTAINING SHEARWALLS. TYPICAL WALL TOP PLATE SPLICES SHALL BE PER DETAIL 7/S1.2 TYP.
7. WHERE COMPOSITE JOISTS AND BEAMS ARE USED AS DRAG STRUTS THE MANUFACTURER SHALL PROVIDE THE FRAMING MEMBERS WITH THE CAPACITY CALLED OUT ON THE PLANS.
8. TYPICAL FLOOR JOISTS SHALL BE 2x12 HF#2 MIN @ 16" O.C. TYP U.N.O. THE MANUFACTURER SHALL BE RESPONSIBLE FOR ALL JOIST AND BEAM HANGERS, WEB STIFFENERS, SOLID BLOCKING, AND ADDITIONAL RIM OR JOIST MATERIAL TO ACCOMMODATE FLUSH-FRAMED CONDITIONS (F.F.), CANTILEVERED CONDITIONS, CONCENTRATED BEARING LOADS AND NAILING FROM SHEARWALLS ABOVE AND BELOW.
9. F.F. = FLUSH-FRAMED BEAM. VERIFY FLUSH OR DROPPED BEAM CONDITION PER ARCHITECT.
10. ALL BEAMS PER SCHEDULE U.N.O. ALL NON BEARING BEAMS SHALL BE A MIN OF (2)2x8 U.N.O. ALL OTHER BEAMS ARE AS MARKED ON PLANS.
11. AT ALL BEAM BEARING/JAMB LOCATIONS, AT MINIMUM PROVIDE BEARING (TRIMMER) STUDS AND FULL HEIGHT (KING) STUDS PER THE JAMB STUD SCHEDULE FOR EACH BUILDING. IF NO CALLOUT, PROVIDE (1) 2X_ BEARING AND (1) 2X_ FULL HEIGHT STUD MINIMUM.
12. EXPOSED FRAMING SHALL BE PRESSURE TREATED (P.T.) VERTICAL & HORIZONTAL FRAMING @ WATERPROOFED WALKWAYS AND PRIVATE DECKS. ALL EXPOSED BEAM HANGERS SHALL BE POST HOT-DIPPED GALVANIZED AND HAVE CONCEALED FLANGES, VERIFY W/ ARCHITECT. SEE NOTE ON SHEET S1.0
13. FOR TYPICAL HOLDOWN ASSEMBLIES SEE THE HOLDOWN TABLE ON 2/S1.2 AND DETAILS ON SHEET S3.0.
14. SEE ARCHITECTURAL PLANS FOR STAIR FRAMING DETAILS & STAIR FRAMING DETAILS AND NOTES, CONTROL JOINTS IN CONCRETE FLOORING AND ROOF VENTILATION REQUIREMENTS AND DETAILS.
15. SEE CIVIL AND ARCHITECTURAL PLANS FOR TOP OF WALL HEIGHTS AND ELEVATIONS. SEE ARCHITECTURAL PLANS FOR DIMENSIONS. WHERE DIMENSIONS ARE SHOWN ON THE STRUCTURAL PLANS, CONTRACTOR SHALL VERIFY COMPATIBILITY W/ ARCHITECTURAL PLANS. WHERE DISCREPANCY EXISTS, CONTRACTOR SHALL NOTIFY BOTH THE ENGINEER AND ARCHITECT FOR CLARIFICATION.
16. WINDOW SUPPLIER TO VERIFY THAT WINDOW AND WINDOW FRAMES TRANSFER WIND LOADS EVENLY TO STRUCTURAL FRAMING ON ALL 4 SIDES OF WINDOW. WINDOW SUPPLIER TO VERIFY MINIMUM .005*H STORY DRIFT TOLERANCE IN PLANE OF ALL WINDOWS AND ALLOW FOR L/240 DEFLECTION (PERPENDICULAR) AT WINDOW MULLIONS.
17. SEE GENERAL STRUCTURAL NOTES ON S1.0 TO S1.3 FOR ADDITIONAL INFORMATION.
18. LEGEND:
   - INDICATES BEAM / GIRDER TRUSS PER PLAN SEE FRAMING PLANS
   - INDICATES HANGER PER MANUFACTURER
   - GT INDICATES GIRDER TRUSS PER PLAN
   - INDICATES JOIST / TRUSS BEARING @ WALL / BEAM
   - INDICATES JOIST / TRUSS INTERMEDIATE BEARING @ WALL / BEAM
   - INDICATES TYPICAL TOILET, BATHTUB & SHOWER LAYOUT. CONTRACTOR TO COORDINATE JOIST LAYOUT WITH FIXTURE LOCATIONS TO AVOID PLUMBING & FRAMING CONFLICTS.
19. INDICATES ROOF OVERFRAMING – SEE DETAILS 5/S5.0
20. PROVIDE WALL FIREBLOCKING @ DROPPED SOFFITS SHOWN ON ARCH.
21. PROVIDE WALL BLOCKING FOR ALL WALL MOUNTED EQUIPMENT (SUCH AS TOWEL BARS, GRAB BARS, TOILET PAPER HOLDERS, DOOR STOPS, ETC.).
22. LFA INDICATES – LOAD FROM ABOVE
23. FF INDICATES FLUSH FRAMED BEAM
24. HD- INDICATES STRAP HOLDOWN, SEE SHEET 2/S1.2 FOR HOLDOWN TABLE & UPPER TO LOWER WALL STRAP/HOLDOWN KEY.
25. REFER TO ARCHITECTURAL DRAWINGS FOR ALL FLOOR ELEVATIONS.
26. SIMPSON STRONG TIE PRODUCTS ARE CALLED OUT ON THE DRAWINGS. HOWEVER, EITHER SIMPSON OR KC METALS PRODUCTS MAY BE USED PROVIDED IT HAS SAME OR GREATER CAPACITY.

NOTE:
ALL JOISTS ARE 2x12 HF#2 MIN @ 16" O.C. TYPICAL U.N.O. USE FACE MOUNT HANGER @ F.F. COND U.N.O.

NOTE:
P.T. 2x8 JOISTS @ 16" O.C. TYP U.N.O. @ DECKS
P.T. 2x10 JOISTS @ 16" O.C. TYP U.N.O. @ STAIR LANDINGS

NOTE:
ALL MULTIPLE 2x HEADERS HF #2 U.N.O.
ALL 4x HEADERS HF #2 U.N.O.
ALL 6x HEADERS/BEAMS D.F.#2 U.N.O.
ALL EXPOSED 6x BEAM / POSTS H.F. #1 P.T. HEM-FIR TREATED PER ARCH. U.N.O.

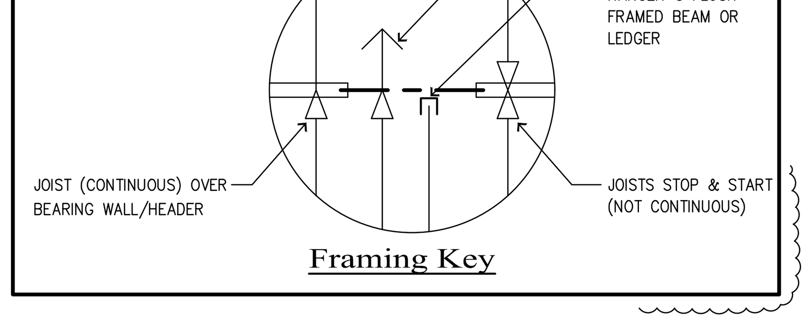

Framing Key

SEE SHEET S1.2 FOR SHEARWALL AND HOLDOWN TABLES

Beam Schedule

MARK	BEAM SIZE
B1	4x8
B2	4x10
B3	6x10 DF #2
B4	3-1/8 x 10-1/2 GLB
B5	P.T. 4x8
B6	P.T. 4x10
B7	P.T. 6x10 HF#1
B8	P.T. 3-1/8 x 10-1/2 GLB
B9	P.T. 5-1/8 x 10-1/2 GLB
B10	5-1/8x10-1/2 GLB OR 5-1/4x11-7/8 PSL
B11	4x12 OR 3-1/2x11-7/8 LSL

Jamb Stud Schedule

TYPE	C1	C2	C3	C4	C5	C6	–	–
BEARING/FULL HT STUDS	1/2	1/3	2/1	2/2	2/3	2/4	–	–

NOTE: STUD SIZE SHOULD MATCH WALL SIZE PER PLAN.

Wall Stud Schedule

FRAMING LEVEL	2x6 EXTERIOR	2x6 BRG INT @ SINGLE WALL	2x6 BRG INT @ PARTY WALLS	2x4 BRG @ SINGLE WALL	2x4 BRG @ PARTY WALLS
ROOF	2x6 @ 16" O.C.	2x6 @ 16" O.C.	2x6 @ 16" O.C.	2x4 HF#2 @ 16" O.C.	2x4 HF#2 @ 16" O.C.
3RD	2x6 @ 16" O.C.	2x6 @ 16" O.C.	2x6 @ 16" O.C.	2x4 HF#2 @ 16" O.C.	2x4 HF#2 @ 16" O.C.
2ND	2x6 @ 16" O.C.	2x6 @ 16" O.C.	2x6 @ 16" O.C.	(2)2x4 HF#2 @ 16" O.C.	2x4 HF#2 @ 16" O.C.
BASEMENT	2x6 @ 16" O.C.	2x6 @ 12" O.C.	2x6 @ 16" O.C.	(2)2x4 HF#2 @ 12" O.C.	2x4 HF#2 @ 16" O.C.

NOTES:

1. ALL STUD MATERIAL SHALL BE HEM FIR STUD GRADE OR BETTER UNLESS NOTED OTHERWISE AND PLATE MATERIAL SHALL BE HEM FIR STANDARD OR BETTER UNLESS NOTED OTHERWISE.
2. STUDS CALLED OUT IN THIS SCHEDULE ARE FOR WALL SUPPORTING THE FRAMING LEVEL INDICATED, THAT IS WALLS BELOW THE FRAMING LEVEL SHOWN.
3. THIS SCHEDULE COVERS BUILDING UNITS 3 STORIES IN HEIGHT. FIRST, DETERMINE THE NUMBER OF STORIES FOR THE UNIT, SECOND, DETERMINE THE FRAMING LEVEL, THIRD, READ SCHEDULE HORIZONTALLY FOR THE WALL LOCATION.

Foundation Notes

1. TYPICAL DIMENSIONS ARE TO FACE OF WALL OR TO CENTERLINE OF COLUMN OR FOOTING. VERIFY ALL DIMENSIONS & ELEVATIONS WITH THE ARCHITECT.
2. PROVIDE FOOTING SUBSTRATE PREPARATION PER THE SOILS REPORT.
3. F-.- INDICATES ISOLATED FOOTING TYPICAL ISOLATED FTG SHALL BE CONSTRUCTED PER FOOTING SCHEDULE 5/S3.0.
4. EXTEND ALL CONTINUOUS FOOTINGS AT END WALLS 1'-0" MIN. BEYOND END OF ALL BEARING WALLS & SHEARWALLS. (TYPICAL) UNO
5. ALL EXTERIOR WALLS SHALL HAVE AN 8" STEMWALL AND A 18" WIDE x 8" DEEP FOOTING W/ STEEL REINFORCING 3" CLR. OF SOIL UNLESS NOTED OTHERWISE
6. ADD STRIP DRAINS AT FACE OF BUILDINGS WHEN WALKS SLOPE TOWARD BUILDING, CONNECT TO TIGHTLINE.
7. PROVIDE #4-24" x 24" CORNER BARS TO MATCH ALL HORIZONTAL REINFORCEMENT IN STEMWALLS AND FOOTINGS. (TYPICAL)
8. FLOOR SLABS – 4" CONC. SLAB ON GRADE 6x6 – W1.2xW1.2 WWF @ CENTER-LINE OR FIBER MESH PER MANUFACTURER OVER SUBSTRATE PER SOILS ENGINEER, USE WWF WHERE INDICATED. PROVIDE CONTROL JOINTS PER DETAIL 15/S3.0 AT THE DIRECTION OF THE ARCHITECT.
9. ENTRY SLABS – 4" CONC. SLAB (BROOM FINISH)
10. PATIO SLABS – 4" CONC. W/ THICKENED EDGES. SLOPE AWAY FROM BUILDING AT 1/4"/FT. SEE 3/S3.0
11. ALL THICKENED SLABS FOR BEARING WALLS AND PARTY WALLS SHALL BE 18" WIDE x 12" DEEP W/ (2) #4 BARS CONTINUOUS UNLESS NOTED OTHERWISE. DEEPEN LOCALLY AT HOLDOWNS TO OBTAIN EMBEDMENT DEPTH +3" MIN.
12. ALL THICKENED EDGE SLABS SHALL BE 8" WIDE x 8" DEEP W/ (1) #4 BAR CONTINUOUS (3" FROM BOTTOM) UNLESS NOTED OTHERWISE. SEE 3/S3.0.
13. W- DENOTES THE SHEARWALL TYPE, SEE THE SHEARWALL TABLE ON SHEET S1.2 ▬▬ INDICATES SHEARWALL LOCATION, THE CALLOUTS ON THE SHEARWALL TABLE APPLY ONLY ALONG THE LENGTH OF WALL SHOWN SHADED. PROVIDE SOLID BLOCKING IN FLOOR SPACE BELOW PERPENDICULAR SHEARWALLS.
    W_P INDICATES SHEAR WALL TYPE WITH OPENINGS. PROVIDE SHEATHING AROUND ALL OPENINGS AND ABOVE AND BELOW ALL OPENINGS. PROVIDE HORIZONTAL STRAPS & NAILING AT OPENINGS PER 8/S1.2
14. HD- INDICATES HOLDOWN, SEE 2/S1.2 FOR HOLDOWN TABLE & UPPER TO LOWER WALL STRAPS HOLDOWN/KEY.
15. VERIFY ALL TOP OF SLAB ELEVATIONS AND BUILDING STEPS WITH ARCH/CIVIL PLANS TYPICAL.
16. TYPICAL PERIMETER FOOTING SHALL BE LOCATED A MIN. 18" BELOW GRADE OR AS REQUIRED BY LOCAL JURISDICTION.
17. SEE DETAILS FOR TYPICAL STEMWALL/FOOTING & THICKENED SLAB CONSTRUCTION.
18. T.O.W. = TOP OF STEMWALL
    T.O.F. = TOP OF FOOTING
    T.O.S. = TOP OF SLAB
19. SEE THE GENERAL STRUCTURAL NOTES ON SHEET S1.0 FOR ADDITIONAL INFORMATION.
20. VERIFY WITH CIVIL GRADING PLAN FOR GARAGE SLAB ELEVATION @ GARAGE DOORWAY.
21. DEEPEN FOOTINGS AS NECESSARY TO MAINTAIN MINIMUM COVER. COORDINATE WITH CIVIL GRADING PLAN FOR GRADE CONDITIONS.
22. ▨ INDICATES DEPRESSED TOP OF STEMWALL AT DOORWAY. POUR SLAB OVER SEE 4/S3.0.
23. ALL INTERSECTING FOOTINGS / STEM WALLS SHALL HAVE CORNER BARS TO MATCH HORIZ REINFORCEMENT SEE 10/S3.0

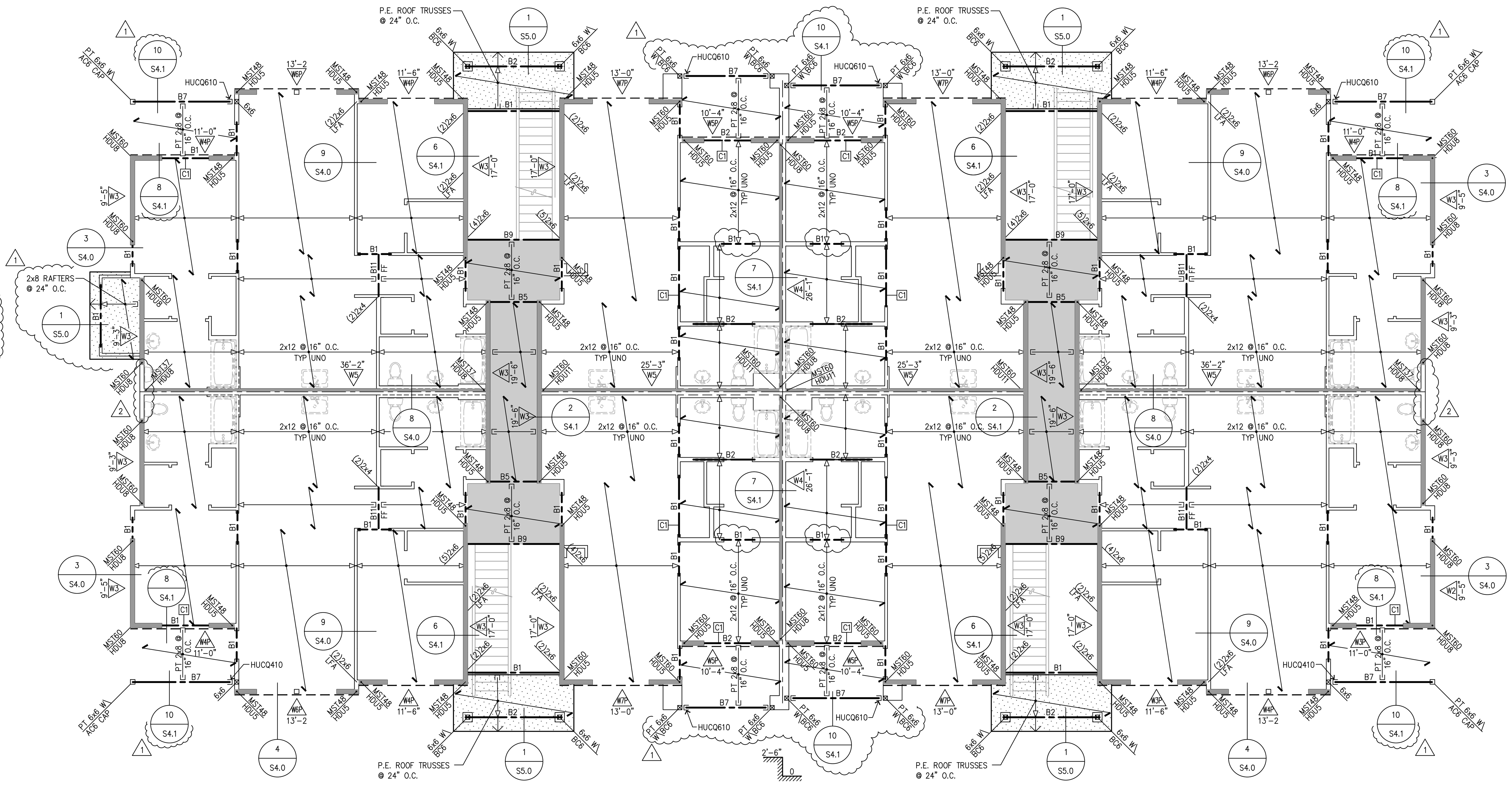

2nd Floor Framing Plan - Bldg H

SCALE 1/8"=1'-0"

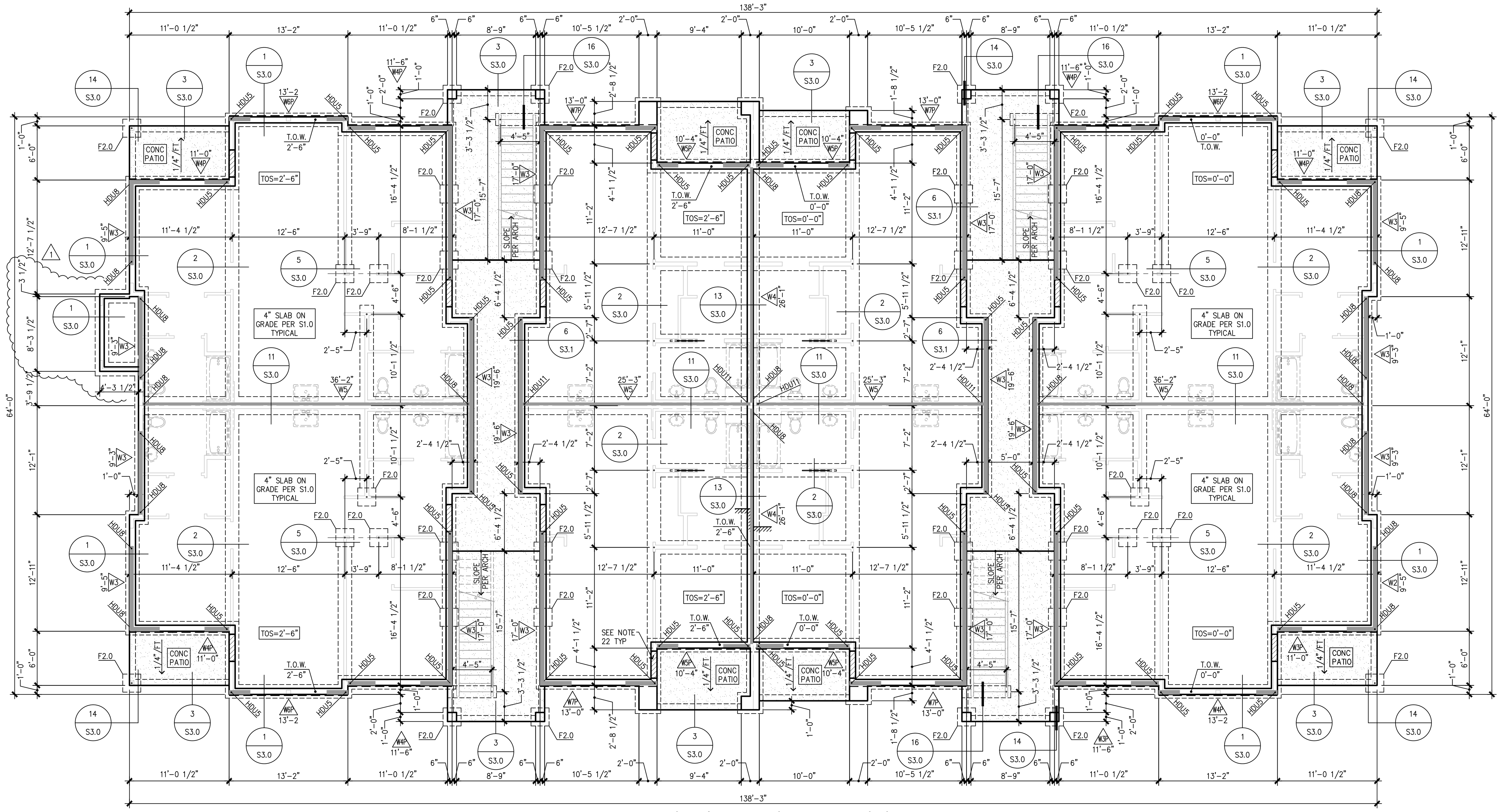

Foundation Plan - Bldg H

SCALE 1/8"=1'-0"

Revisions to this sheet:
1 8-30-24 PERMIT CORRECTIONS & OWNER CHANGES
2 4-24-25 PERMIT CORRECTIONS & OWNER CHANGES

PRMU20240279

THOMAS L. CHASE, PE
MARTIN R. OMAN, PE, SE
OLEG G. KONDRATYUK, PE

4-24-25

Bradley Heights Apartments
202 27th Ave SE
Puyallup, Washington

Solutions 4 Inc. Structures
A Structural Engineering Corporation

Puyallup, Washington 98374
Ph 253-314-9822
www.solutions4structures.com

PROJECT NO. : 23.007
DESIGNED BY : TLC, OGK, MRO
DRAWN BY : RSO
ISSUE DATE : 2-20-24
LATEST REV. OF DWG. SET : 2 4-24-25

SUBMITTAL SET ONLY NOT FOR CONSTRUCTION
THESE DRAWINGS ARE SUBJECT TO REVISIONS PENDING LOCAL JURISDICTIONAL REVIEW.

S2.19

Solutions 4 Inc. Structures A Structural Engineering Corporation

CAD FILE: F:\Projects\2023 Projects\23.007 Bradley Heights\Drawings\S2.19.dwg PLOT DATE/TIME: 4/25/2025 – 1:56pm THANK YOU FOR USING SOLUTIONS 4 STRUCTURES

Floor & Roof Framing Notes

1. ROOF AND FLOOR JOIST LOCATIONS ARE SCHEMATICALLY SHOWN ON THE PLANS. IT IS NOT THE INTENT OF THE STRUCTURAL PLANS TO GRAPHICALLY LOCATE ALL FRAMING MEMBERS. THE ARCHITECT SHALL VERIFY THE COMPATIBILITY OF JOIST LAYOUT AND FRAMING W/ MECHANICAL, ELECTRICAL & PLUMBING AND ARCHITECTURAL PLANS. THE CONTRACTOR IS RESPONSIBLE FOR SPACING FRAMING MEMBERS AS NOTED ON THE PLANS AND GENERATING MEMBER LAYOUT FOR SHOP DRAWINGS AND QUANTITY TAKEOFFS.
2. FOR ALL UNITS TYPES SEE WALL STUD SCHEDULE FOR BEARING WALL STUD REQUIREMENTS. ALL OTHER NON-BEARING 2x4 & 2x6 WALLS ARE AT 16" O.C.
3. THE TRUSS AND JOIST MANUFACTURER SHALL VERIFY BEARING COMPATIBILITY (CRUSHING) WITH THE PLATE MATERIAL. TYPICALLY, COMPOSITE BEAMS SHALL BE FULLY BEARING ON 2x_ WALLS. I.E. BREAK RIM OR BLOCKING TO ALLOW FULL BEARING OVER PLATES.
4. PLACE LONG DIRECTION OF ALL OSB SHEETS PERPENDICULAR TO TRUSS/RAFTER OR JOIST DIRECTION, SEE DETAIL 3/S1.2. FLOOR SHEATHING IS TO BE CONTINUOUS FROM UNIT TO UNIT. TYPICAL NAILING AT FLOOR AND ROOF DIAPHRAGMS IS PROVIDED IN THE GENERAL STRUCTURAL NOTES ON SHEETS S1.0.
5. W DENOTES THE SHEARWALL TYPE, SEE THE SHEARWALL TABLE ON SHEET S1.2. INDICATES SHEARWALL LOCATION, THE CALLOUTS ON THE SHEARWALL TABLE APPLY ONLY ALONG THE LENGTH OF WALL SHOWN SHADED. PROVIDE SOLID BLOCKING IN FLOOR SPACE BELOW PERPENDICULAR SHEARWALLS.
   W/A INDICATES SHEAR WALL TYPE WITH OPENINGS. PROVIDE SHEATHING AROUND ALL OPENINGS AND ABOVE AND BELOW ALL OPENINGS. PROVIDE HORIZONTAL STRAPS & NAILING AT OPENINGS PER 8/S1.2
6. THE DOUBLE TOP PLATE IS TO BE CONTINUOUS ALONG ALL EXTERIOR WALLS AND AT ALL WALL LINES CONTAINING SHEARWALLS. TYPICAL WALL TOP PLATE SPLICES SHALL BE PER DETAIL 7/S1.2 TYP.
7. WHERE COMPOSITE JOISTS AND BEAMS ARE USED AS DRAG STRUTS THE MANUFACTURER SHALL PROVIDE THE FRAMING MEMBERS WITH THE CAPACITY CALLED OUT ON THE PLANS.
8. TYPICAL FLOOR JOISTS SHALL BE 2x12 HF#2 MIN @ 16" O.C. TYP U.N.O. THE MANUFACTURER SHALL BE RESPONSIBLE FOR ALL JOIST AND BEAM HANGERS, WEB STIFFENERS, SOLID BLOCKING, AND ADDITIONAL RIM OR JOIST MATERIAL TO ACCOMMODATE FLUSH-FRAMED CONDITIONS (F.F.), CANTILEVERED CONDITIONS, CONCENTRATED BEARING LOADS AND NAILING FROM SHEARWALLS ABOVE AND BELOW.
9. F.F. = FLUSH-FRAMED BEAM. VERIFY FLUSH OR DROPPED BEAM CONDITION PER ARCHITECT.
10. ALL BEAMS PER SCHEDULE U.N.O. ALL NON BEARING BEAMS SHALL BE A MIN OF (2)2x8 U.N.O. ALL OTHER BEAMS ARE AS MARKED ON PLANS.
11. AT ALL BEAM BEARING/JAMB LOCATIONS, AT MINIMUM PROVIDE BEARING (TRIMMER) STUDS AND FULL HEIGHT (KING) STUDS PER THE JAMB STUD SCHEDULE FOR EACH BUILDING. IF NO CALLOUT, PROVIDE (1) 2X_ BEARING AND (1) 2X_ FULL HEIGHT STUD MINIMUM.
12. EXPOSED FRAMING SHALL BE PRESSURE TREATED (P.T.) VERTICAL & HORIZONTAL FRAMING @ WATERPROOFED WALKWAYS AND PRIVATE DECKS. ALL EXPOSED BEAM HANGERS SHALL BE POST HOT-DIPPED GALVANIZED AND HAVE CONCEALED FLANGES, VERIFY W/ ARCHITECT. SEE NOTE ON SHEET S1.0
13. FOR TYPICAL HOLDOWN ASSEMBLIES SEE THE HOLDOWN TABLE ON 2/S1.2 AND DETAILS ON SHEET S3.0.
14. SEE ARCHITECTURAL PLANS FOR STAIR FRAMING DETAILS & STAIR FRAMING DETAILS AND NOTES, CONTROL JOINTS IN CONCRETE FLOORING AND ROOF VENTILATION REQUIREMENTS AND DETAILS.
15. SEE CIVIL AND ARCHITECTURAL PLANS FOR TOP OF WALL HEIGHTS AND ELEVATIONS. SEE ARCHITECTURAL PLANS FOR DIMENSIONS. WHERE DIMENSIONS ARE SHOWN ON THE STRUCTURAL PLANS, CONTRACTOR SHALL VERIFY COMPATIBILITY W/ ARCHITECTURAL PLANS. WHERE DISCREPANCY EXISTS, CONTRACTOR SHALL NOTIFY BOTH THE ENGINEER AND ARCHITECT FOR CLARIFICATION.
16. WINDOW SUPPLIER TO VERIFY THAT WINDOW AND WINDOW FRAMES TRANSFER WIND LOADS EVENLY TO STRUCTURAL FRAMING ON ALL 4 SIDES OF WINDOW. WINDOW SUPPLIER TO VERIFY MINIMUM .005*H STORY DRIFT TOLERANCE IN PLANE OF ALL WINDOWS AND ALLOW FOR L/240 DEFLECTION (PERPENDICULAR) AT WINDOW MULLIONS.
17. SEE GENERAL STRUCTURAL NOTES ON S1.0 TO S1.3 FOR ADDITIONAL INFORMATION.
18. LEGEND:
    - INDICATES BEAM / GIRDER TRUSS PER PLAN SEE FRAMING PLANS
    - INDICATES HANGER PER MANUFACTURER
    - GT INDICATES GIRDER TRUSS PER PLAN
    - INDICATES JOIST / TRUSS BEARING @ WALL / BEAM
    - INDICATES JOIST / TRUSS INTERMEDIATE BEARING @ WALL / BEAM
    - INDICATES TYPICAL TOILET, BATHTUB & SHOWER LAYOUT. CONTRACTOR TO COORDINATE JOIST LAYOUT WITH FIXTURE LOCATIONS TO AVOID PLUMBING & FRAMING CONFLICTS.
19. INDICATES ROOF OVERFRAMING – SEE DETAILS 5/S5.0
20. PROVIDE WALL FIREBLOCKING @ DROPPED SOFFITS SHOWN ON ARCH.
21. PROVIDE WALL BLOCKING FOR ALL WALL MOUNTED EQUIPMENT (SUCH AS TOWEL BARS, GRAB BARS, TOILET PAPER HOLDERS, DOOR STOPS, ETC.).
22. LFA INDICATES – LOAD FROM ABOVE
23. FF INDICATES FLUSH FRAMED BEAM
24. HD INDICATES STRAP HOLDOWN, SEE SHEET 2/S1.2 FOR HOLDOWN TABLE & UPPER TO LOWER WALL STRAP/HOLDOWN KEY.
25. REFER TO ARCHITECTURAL DRAWINGS FOR ALL FLOOR ELEVATIONS.
26. SIMPSON STRONG TIE PRODUCTS ARE CALLED OUT ON THE DRAWINGS. HOWEVER, EITHER SIMPSON OR KC METALS PRODUCTS MAY BE USED PROVIDED IT HAS SAME OR GREATER CAPACITY.

NOTE:
ALL JOISTS ARE 2x12 HF#2 MIN @ 16" O.C. TYPICAL U.N.O. USE FACE MOUNT HANGER @ F.F. COND U.N.O.

NOTE:
P.T. 2x8 JOISTS @ 16" O.C. TYP U.N.O. @ DECKS
P.T. 2x10 JOISTS @ 16" O.C. TYP U.N.O. @ STAIR LANDINGS

NOTE:
ALL MULTIPLE 2x HEADERS HF #2 U.N.O.
ALL 4x HEADERS HF #2 U.N.O.
ALL 6x HEADERS/BEAMS D.F.#2 U.N.O.
ALL EXPOSED 6x BEAM / POSTS H.F. #1
P.T. HEM-FIR TREATED PER ARCH. U.N.O.

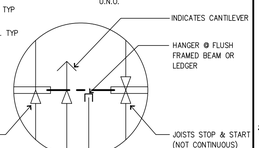

Framing Key

SEE SHEET S1.2 FOR SHEARWALL AND HOLDOWN TABLES

Beam Schedule

MARK	BEAM SIZE
B1	4x8
B2	4x10
B3	6x10 DF #2
B4	3-1/8 x 10-1/2 GLB
B5	P.T. 4x8
B6	P.T. 4x10
B7	P.T. 6x10 HF#1
B8	P.T. 3-1/8 x 10-1/2 GLB
B9	P.T. 5-1/8 x 10-1/2 GLB
B10	5-1/8x10-1/2 GLB OR 5-1/4x11-7/8 PSL
B11	4x12 OR 3-1/2x11-7/8 LSL

Jamb Stud Schedule

TYPE	C1	C2	C3	C4	C5	C6	–	–
BEARING/FULL HT STUDS	1/2	1/3	2/1	2/2	2/3	2/4	–	–

NOTE: STUD SIZE SHOULD MATCH WALL SIZE PER PLAN.

Wall Stud Schedule

FRAMING LEVEL	2x6 EXTERIOR	2x6 BRG INT @ SINGLE WALL	2x6 BRG INT @ PARTY WALLS	2x4 BRG @ SINGLE WALL	2x4 BRG @ PARTY WALLS
ROOF	2x6 @ 16" O.C.	2x6 @ 16" O.C.	2x6 @ 16" O.C.	2x4 HF#2 @ 16" O.C.	2x4 HF#2 @ 16" O.C.
3RD	2x6 @ 16" O.C.	2x6 @ 16" O.C.	2x6 @ 16" O.C.	2x4 HF#2 @ 16" O.C.	2x4 HF#2 @ 16" O.C.
2ND	2x6 @ 16" O.C.	2x6 @ 16" O.C.	2x6 @ 16" O.C.	(2)2x4 HF#2 @ 16" O.C.	2x4 HF#2 @ 16" O.C.
BASEMENT	2x6 @ 16" O.C.	2x6 @ 12" O.C.	2x6 @ 16" O.C.	(2)2x4 HF#2 @ 12" O.C.	2x4 HF#2 @ 16" O.C.

NOTES:
1. ALL STUD MATERIAL SHALL BE HEM FIR STUD GRADE OR BETTER UNLESS NOTED OTHERWISE AND PLATE MATERIAL SHALL BE HEM FIR STANDARD OR BETTER UNLESS NOTED OTHERWISE.
2. STUDS CALLED OUT IN THIS SCHEDULE ARE FOR WALL SUPPORTING THE FRAMING LEVEL INDICATED, THAT IS WALLS BELOW THE FRAMING LEVEL SHOWN.
3. THIS SCHEDULE COVERS BUILDING UNITS 3 STORIES IN HEIGHT. FIRST, DETERMINE THE NUMBER OF STORIES FOR THE UNIT, SECOND, DETERMINE THE FRAMING LEVEL, THIRD, READ SCHEDULE HORIZONTALLY FOR THE WALL LOCATION.

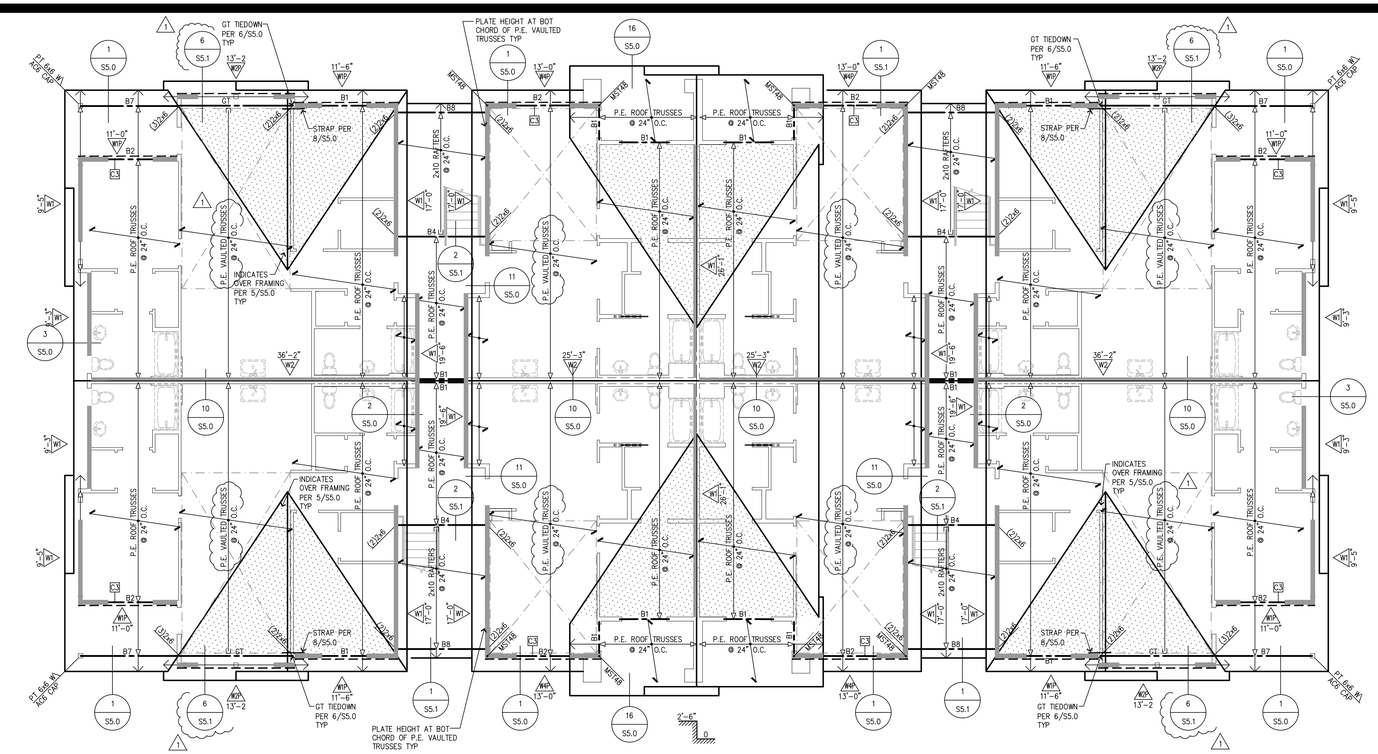

Roof Framing Plan - Bldg H

SCALE 1/8"=1'-0"

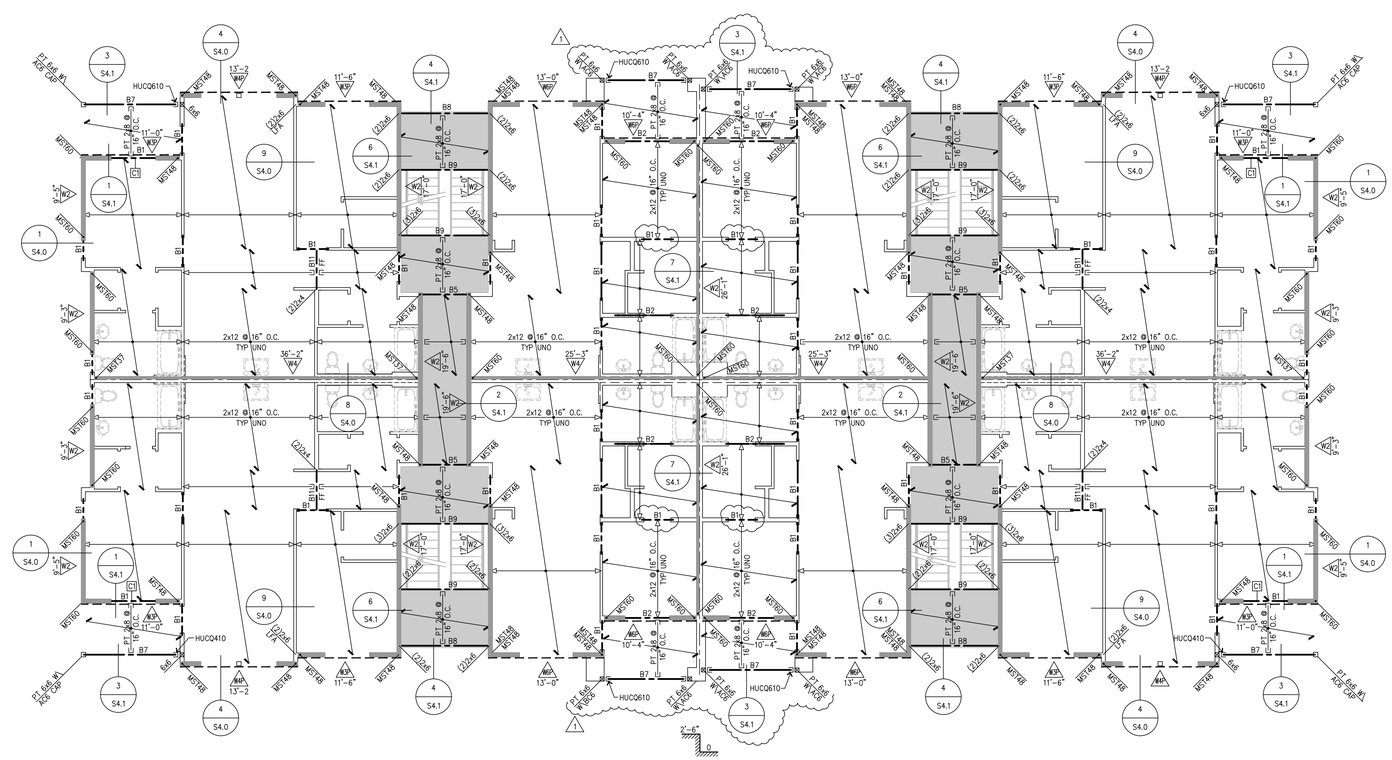

3rd Floor Framing Plan - Bldg H

SCALE 1/8"=1'-0"

City of Puyallup Community & Economic Development Building Engineering Permit Center Planning Engineering Permit Center

4-24-25

THOMAS L. CHASE, PE
MARTIN R. OMAN, PE, SE
OLEG G. KONDRATYUK, PE

Revisions to this sheet:
1 8-30-24 PERMIT CORRECTIONS & OWNER CHANGES

PRMU20240279

Bradley Heights Apartments
202 27th Ave SE
Puyallup, Washington

Solutions 4 Inc. Structures
A Structural Engineering Corporation
Puyallup, Washington 98374
Ph 253-314-9822
www.solutions4structures.com

PROJECT NO. : 23.007
DESIGNED BY : TLC, OGK, MRO
DRAWN BY : RSO
ISSUE DATE : 2-20-24
LATEST REV. OF DWG. SET : 1 4-24-25

SUBMITTAL SET ONLY NOT FOR CONSTRUCTION
THESE DRAWINGS ARE SUBJECT TO REVISIONS PENDING LOCAL JURISDICTIONAL REVIEW.

S2.20

CAD FILE: F:\Projects\2023 Projects\23.007 Bradley Heights\Drawings\S2.20.dwg PLOT DATE/TIME: 4/23/2025 – 11:41am THANK YOU FOR USING SOLUTIONS 4 STRUCTURES

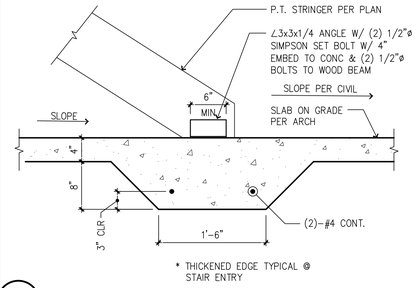

16 FOOTING AT STAIR BASE

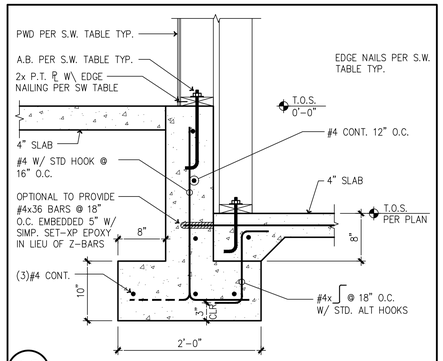

13 STEP AT PARTY WALL

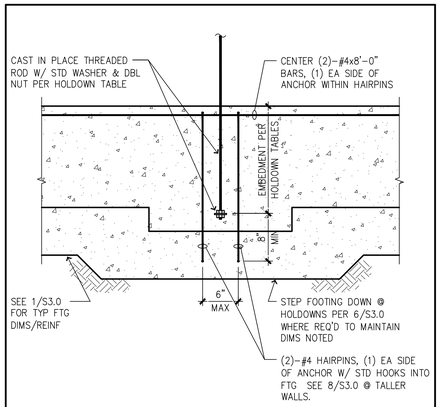

*NO EXTRA REINFORCEMENT REQUIRED AT HDU2 + HDU4 WITH MINIMUM EDGE DISTANCE PER HOLDOWN TABLE.

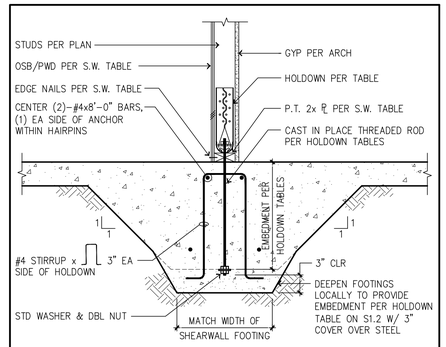

7 HOLDOWNS @ THICKENED SLAB FOOTINGS

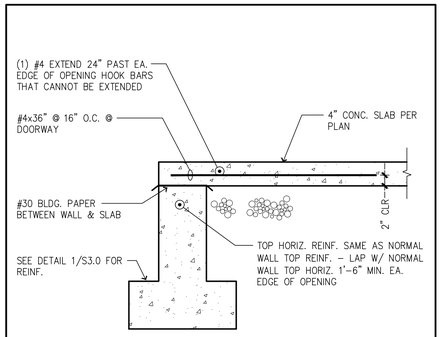

4 SECTION @ DOORWAY

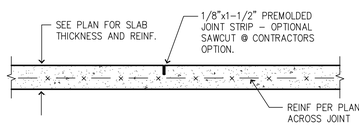

PROVIDE CONTROL OR CONSTRUCTION JOINTS IN SLAB ON GRADE AS SHOWN ON PLANS OR AS APPROVED BY THE ARCHITECT. JOINTS SHALL BREAK SLAB INTO RECTANGULAR AREAS OF 400 S.F. OR LESS. AREAS TO BE LESS THAN 2:1 (LENGTH/WIDTH) RATIO AND HAVE NO ACUTE ANGLES.

15 CONTROL JOINT

N.T.S

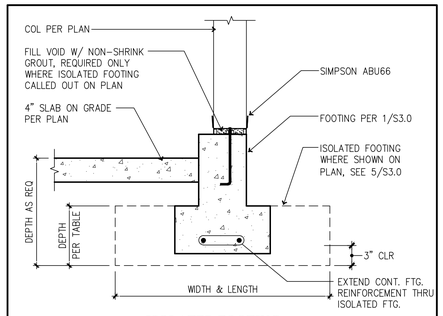

ISOLATED FOOTING

12 TYP. POST TO STEM WALL CONN.

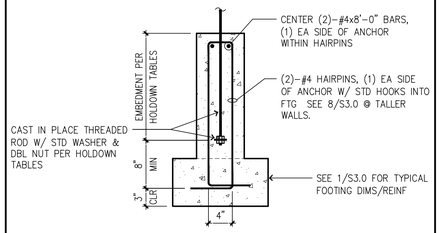

9 ANCHORS @ SHORT STEM WALL CONDITION

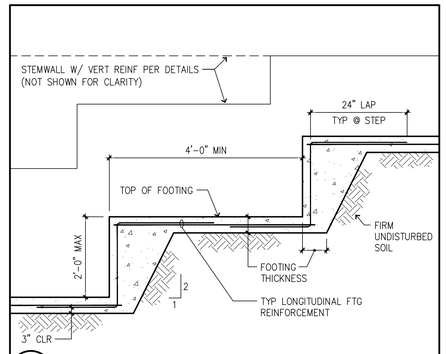

6 REINFORCED STEPPED FOUNDATION

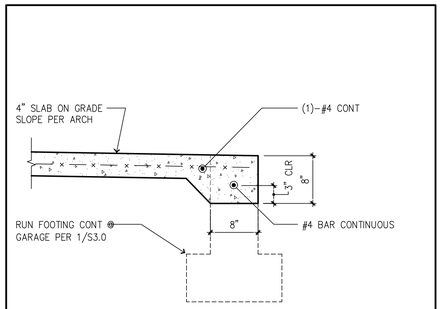

3 THICKENED SLAB EDGE

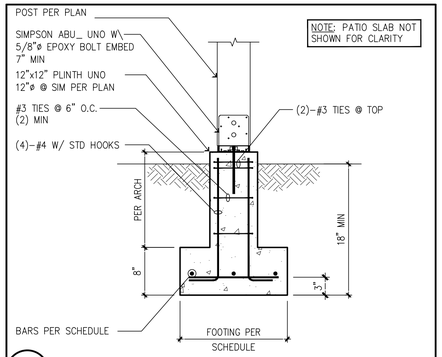

NOTE: PATIO SLAB NOT SHOWN FOR CLARITY

14 ISOLATED FOOTING AT EXTERIOR

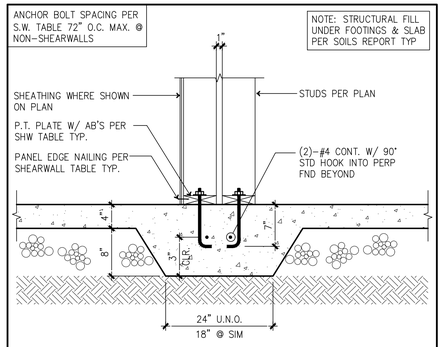

NOTE: STRUCTURAL FILL UNDER FOOTINGS & SLAB PER SOILS REPORT TYP

11 INTERIOR FOOTING AT PARTY WALL

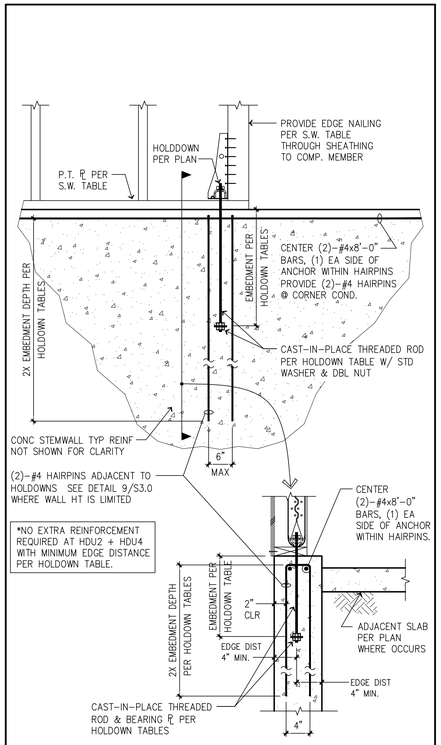

*NO EXTRA REINFORCEMENT REQUIRED AT HDU2 + HDU4 WITH MINIMUM EDGE DISTANCE PER HOLDOWN TABLE.

8 ANCHORS @ TALL STEMWALL CONDITION

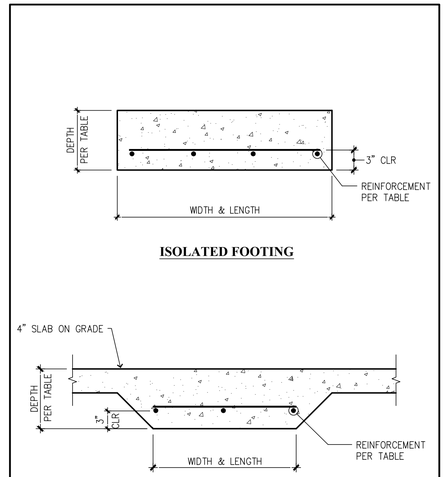

MARK	WIDTH OR LENGTH	DEPTH	REINFORCEMENT
F2.0	2'-0"x2'-0"	10"	(3)-#4 BARS EA WAY
F2.5	2'-6"x2'-6"	10"	(3)-#4 BARS EA WAY
F2.5x3.0	2'-6"x3'-0"	10"	(3)-#4 BARS EA WAY
F3.0	3'-0"x3'-0"	12"	(3)-#4 BARS EA WAY
F3.5	3'-6"x3'-6"	12"	(4)-#4 BARS EA WAY
F4.0	4'-0"x4'-0"	14"	(4)-#4 BARS EA WAY

* DEEPEN FOOTING LOCALLY AS REQUIRED FOR HOLDOWNS TO EQUAL ANCHOR EMBEDMENT +3" CLEAR MIN

5 FOOTING SCHEDULE

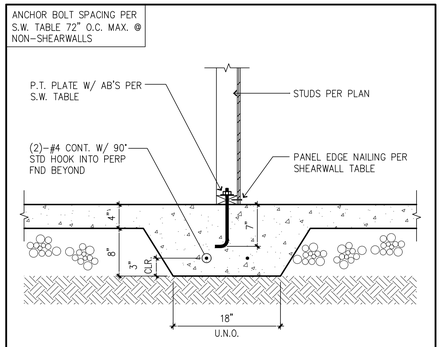

2 INTERIOR FOOTING

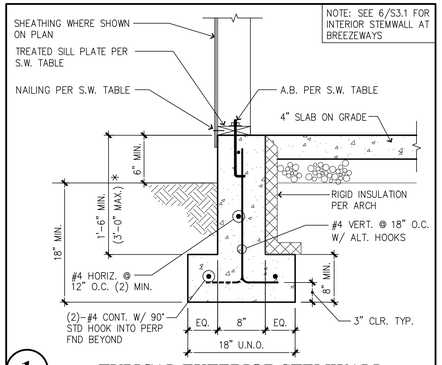

NOTE: SEE 6/S3.1 FOR INTERIOR STEMWALL AT BREEZEWAYS

1 TYPICAL EXTERIOR STEMWALL

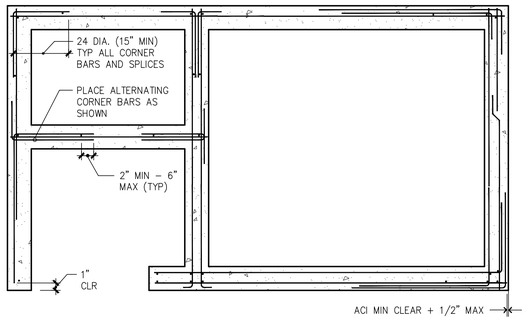

NOTES:

1. VERTICAL REINF SHOWN IS ADDED IF NORMAL WALL REINF IS NOT IN PROPER LOCATIONS.
2. CORNER BARS ARE SAME SIZE AND SPACING AS HORIZ REINF
3. 90° HOOKS MAY BE SUBSTITUTED FOR CORNER BARS (SEE NOTE 5).
4. REINF AT ALL WALL CORNERS, ENDS AND INTERSECTIONS SHALL BE FABRICATED AND PLACED IN ACCORDANCE WITH APPROPRIATE DETAIL SHOWN.
5. USE ACI MIN 90° HOOK FOR EMBEDMENT LESS THAN 24 DIAMETERS PAST FACE OF WALL.
6. CONCRETE WALLS SHOWN; MASONRY WALLS SIMILAR.
7. WALL DETAILS SHOWN; FTG DETAILS SIMILAR.
8. VARIOUS WALL SECTIONS AND INTERSECTIONS SHOWN; USE APPROPRIATE DETAILS.
9. ALL BENDS SHALL BE PER ACI

10 TYPICAL REINFORCEMENT PLACEMENT DIAGRAM

N.T.S

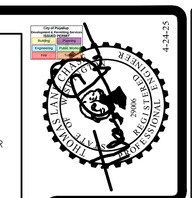

THOMAS L. CHASE, PE
MARTIN R. OMAN, PE, SE
OLEG G. KONDRATYUK, PE

Revisions to this sheet:

PRMU20240279

Bradley Heights Apartments
202 27th Ave SE
Puyallup, Washington

Solutions 4 Structures Inc.
A Structural Engineering Corporation
Puyallup, Washington 98374
Ph 253-314-9822
www.solutions4structures.com

PROJECT NO. : 23.007
DESIGNED BY : TLC, OGK, MRO
DRAWN BY : RSO
ISSUE DATE : 2-20-24
LATEST REV. OF DWG. SET : △1 4-24-25

SUBMITTAL SET ONLY NOT FOR CONSTRUCTION
THESE DRAWINGS ARE SUBJECT TO REVISIONS PENDING LOCAL JURISDICTIONAL REVIEW.

S3.0

CAD FILE: F:\Projects\2023 Projects\23.007 Bradley Heights\Drawings\S3.0.dwg
PLOT DATE/TIME: 4/23/2025 – 11:18am THANK YOU FOR USING SOLUTIONS 4 STRUCTURES

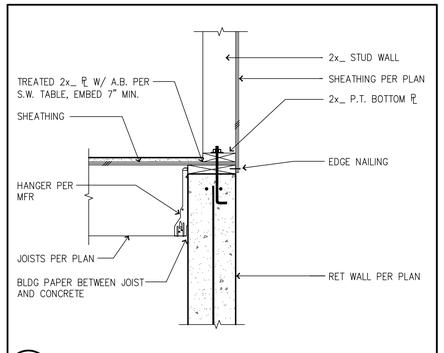

10 JOISTS TO RETAINING WALL

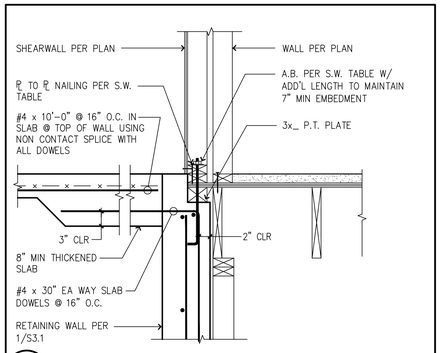

7 TOP OF RETAINING WALL

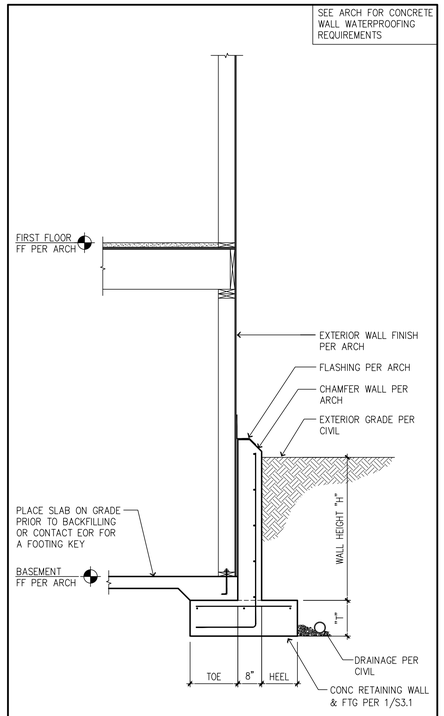

3 PARTIAL HT BASEMENT RETAINING WALL

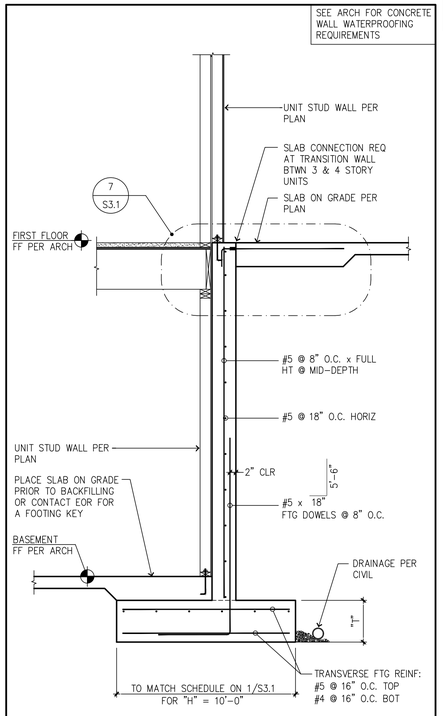

2 FULL HT BASEMENT WALL

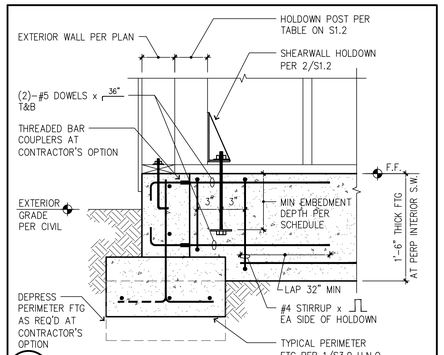

9 TYP HOLDOWN AT FDN INTERSECTION

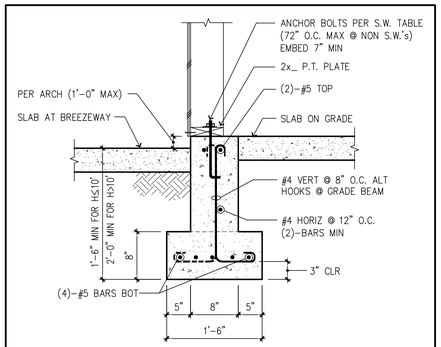

6 INTERIOR FOOTING AT GRADE BEAM AT BREEZEWAY'S

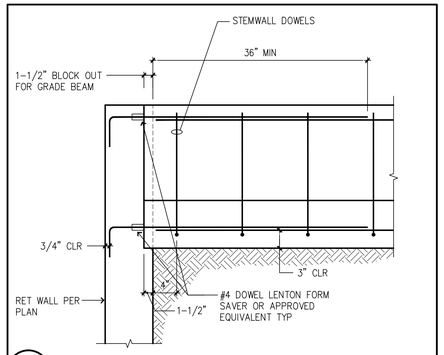

8 GRADE BEAM TO RET WALL

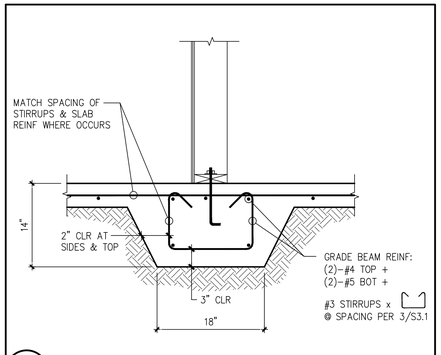

5 TYPICAL GRADE BEAM

DESIGN PARAMETERS

1. SOIL BEARING = 2,000 PSF
2. ACTIVE & AT REST FLUID PRESSURES PER DIAGRAM
3. PASSIVE FLUID PRESSURE = 450 PCF
4. 20 PSF (MAX) LIVE LOAD SURCHARGE, HORIZ.
5. 12*H PSF (MAX) SEISMIC SURCHARGE, HORIZ.
5. SOIL FRICTION COEF. = 0.53
6. SOIL UNIT WEIGHT = 120 PCF (MIN)
7. DRAINAGE SYSTEM BY OTHERS. HYDROSTATIC PRESSURES BEHIND THE WALL ARE NOT PERMITTED

NOTES

1. PROVIDE CORNER STEEL @ FTG CORNERS & INTERSECTIONS. USE 36"x36" ELBOW STEEL TO LAP HORIZ REINF, MATCH SIZE.
2. CONTRACTOR SHALL VERIFY ALL DIMENSIONS AND HEIGHTS PRIOR TO CONSTRUCTION. NOTIFY ENGR/OWNER OF ANY DISCREPANCIES.
3. REINFORCEMENT GRADES SHALL TYPICALLY BE : GRADE 60
4. CONCRETE STRENGTH SHALL BE A MINIMUM OF 2500 PSI PRIOR TO BACKFILL.

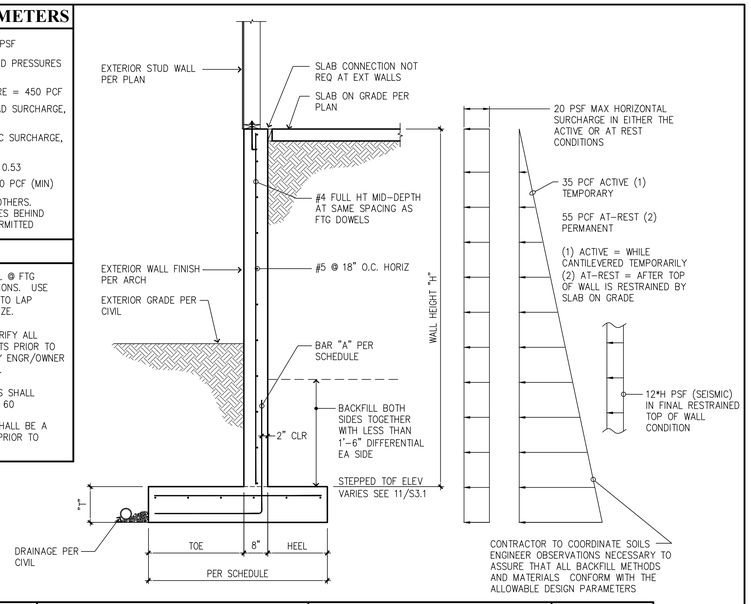

WALL HEIGHT MAX	FOOTING DIMENSIONS					BAR "A"			BAR "B"
	TOE	STEM	HEEL	TOTAL	"T" THKNS	SIZE & SPACING	VERT LEG	HORIZ LEG	SIZE & SPACING
10'-0"	2'-8"	8"	1'-8"	5'-0"	14"	#5 @ 10" O.C.	5'-6"	2'-10"	#4 @ 10" O.C.
8'-0"	2'-0"	8"	1'-4"	4'-0"	12"	#5 @ 12" O.C.	4'-6"	2'-2"	#4 @ 12" O.C.
6'-0"	1'-4"	8"	1'-0"	3'-0"	12"	#4 @ 12" O.C.	FULL HT	1'-6"	#4 @ 12" O.C.
4'-0"	0'-8"	8"	0'-8"	2'-0"	10"	#4 @ 16" O.C.	FULL HT	0'-10"	#4 @ 16" O.C.

1 STEPPED BASEMENT WALL SCHEDULE

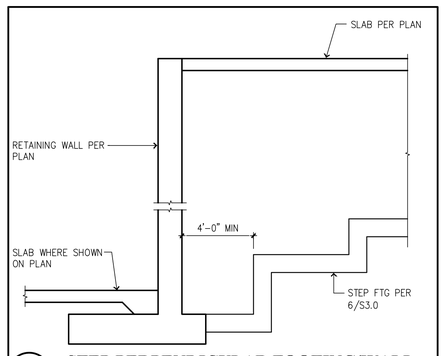

11 STEP PERPENDICULAR FOOTING/WALL BEHIND RETAINING WALL

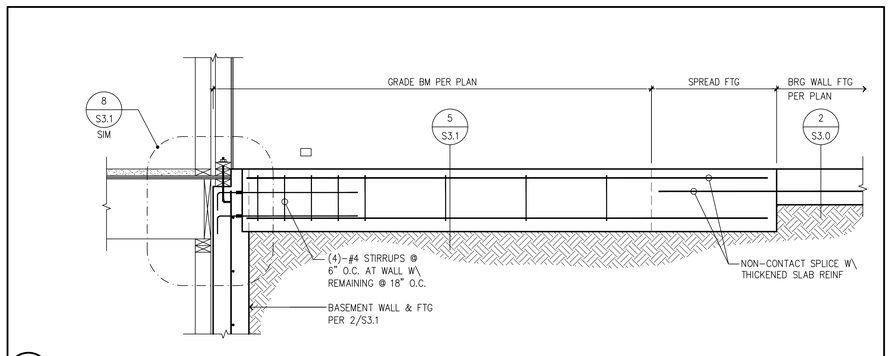

4 GRADE BEAM AT BASEMENT WALL

City of Puyallup
Community & Economic Development
BRADLEY HEIGHTS
Building | Planning
Engineering | Public Works
Fire | Parks

4-24-25

THOMAS L. CHASE, PE
MARTIN R. OMAN, PE, SE
OLEG G. KONDRATYUK, PE

Revisions to this sheet:

PRMU20240279

Bradley Heights Apartments
202 27th Ave SE
Puyallup, Washington

Solutions 4 Structures Inc.
A Structural Engineering Corporation
Puyallup, Washington 98374
Ph 253-314-9822
www.solutions4structures.com

PROJECT NO. : 23.007
DESIGNED BY : TLC, OGK, MRO
DRAWN BY : RSO
ISSUE DATE : 2-20-24
LATEST REV. OF DWG. SET : 4-24-25

SUBMITTAL SET ONLY NOT FOR CONSTRUCTION
THESE DRAWINGS ARE SUBJECT TO REVISIONS PENDING LOCAL JURISDICTIONAL REVIEW.

S3.1

CAD FILE: F:\Projects\2023 Projects\23.007 Bradley Heights\Drawings\S3.1.dwg
PLOT DATE/TIME: 4/23/2025 – 1:14pm THANK YOU FOR USING SOLUTIONS 4 STRUCTURES

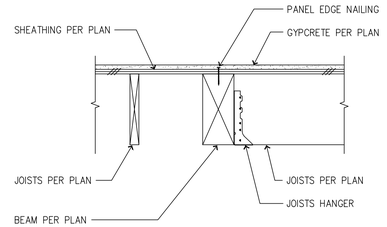

16 TYP BEAM AT INTERIOR ONE SIDE

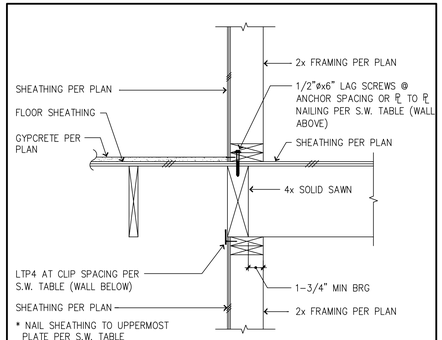

12 INTERIOR WALL BEARING ONE SIDE (W3 ,W4 & W5 SHEAR TRANSFER)

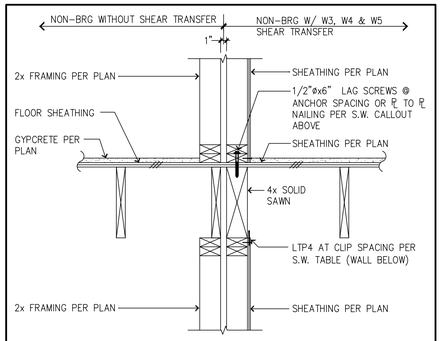

8 PARTY WALL NON-BEARING (W3 ,W4 & W5 SHEAR TRANSFER)

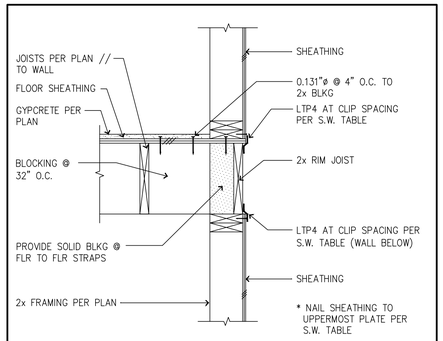

4 FLOOR JOIST PARALLEL TO WALL (W3 ,W4 & W5 SHEAR TRANSFER)

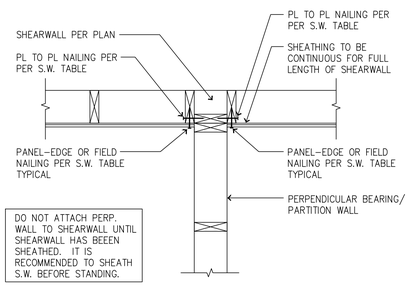

19 CONTINUOUS SHEATHING @ SHEARWALL

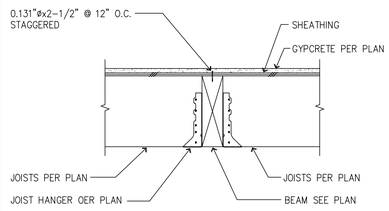

15 TYP JOISTS AT FLUSH FRAMED BEAM SUPPORT

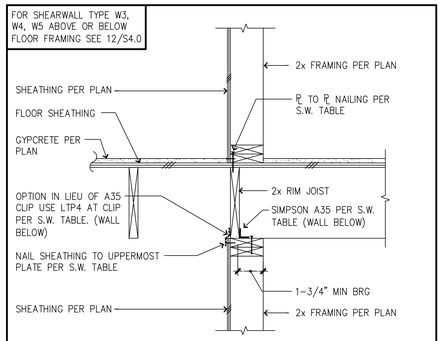

11 INTERIOR WALL BEARING ONE SIDE (W1 ,W2 SHEAR TRANSFER)

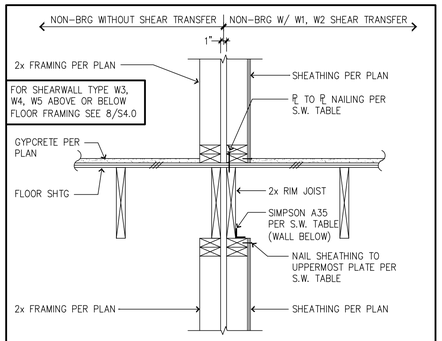

7 TYP PARTY WALL NON-BEARING (W1 ,W2 SHEAR TRANSFER)

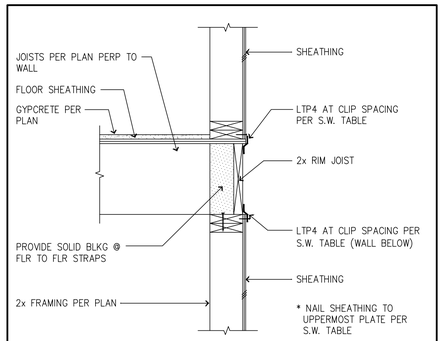

3 FLOOR JOIST PERPENDICULAR TO WALL (W3 ,W4 & W5 SHEAR TRANSFER)

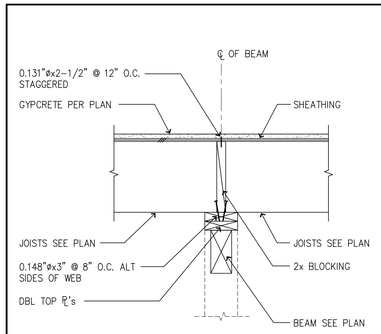

18 TYP CONTINUOUS JOISTS AT DROPPED BM SUPPORT

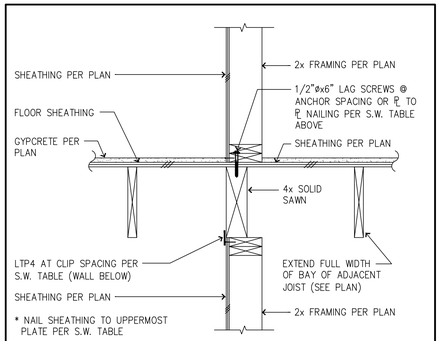

14 INTERIOR WALL NON-BEARING (W3 ,W4 & W5 SHEAR TRANSFER)

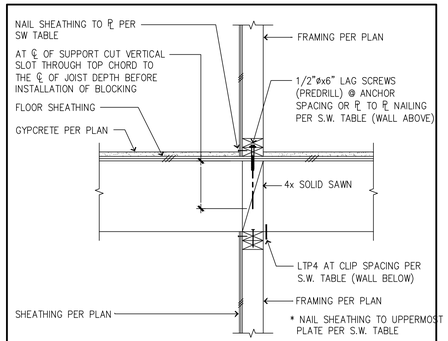

10 INTERIOR BEARING EA SIDE (W3 ,W4 & W5 SHEAR TRANSFER)

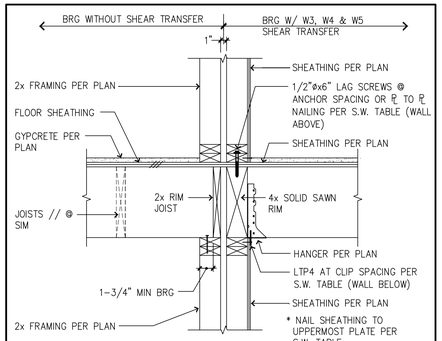

6 PARTY WALL BEARING EA SIDE (W3 ,W4 & W5 SHEAR TRANSFER)

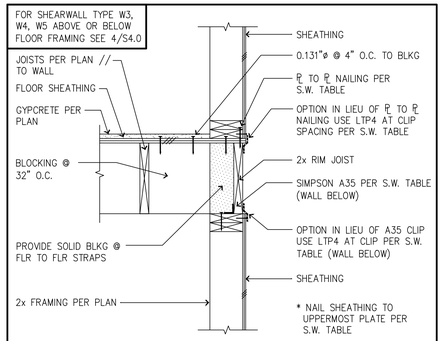

2 TYP FLOOR JOIST PARALLEL TO WALL (W1 ,W2 SHEAR TRANSFER)

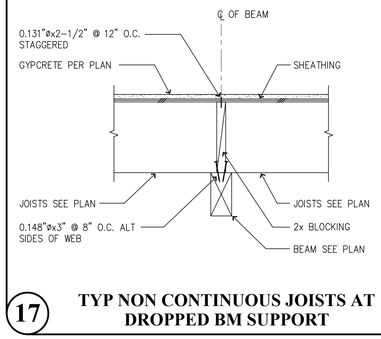

17 TYP NON CONTINUOUS JOISTS AT DROPPED BM SUPPORT

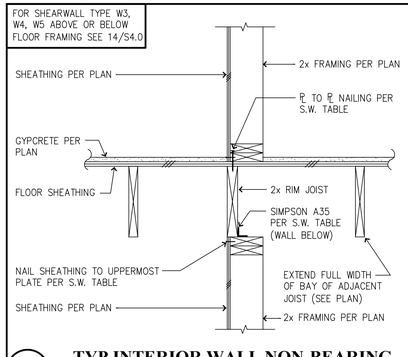

13 TYP INTERIOR WALL NON-BEARING (W1 ,W2 SHEAR TRANSFER)

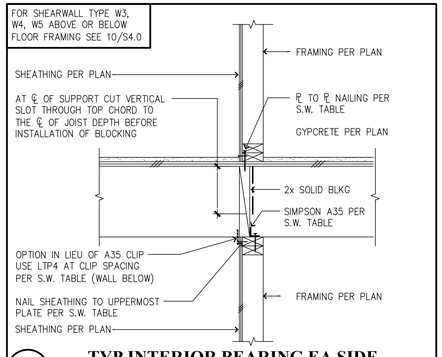

9 TYP INTERIOR BEARING EA SIDE (W1 ,W2 SHEAR TRANSFER)

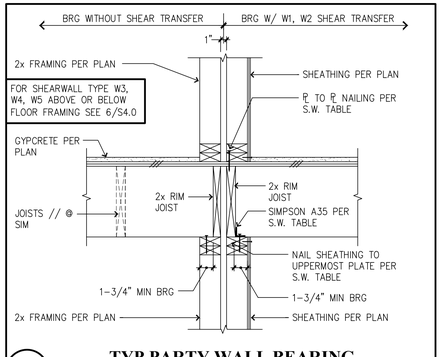

5 TYP PARTY WALL BEARING EA SIDE (W1 ,W2 SHEAR TRANSFER)

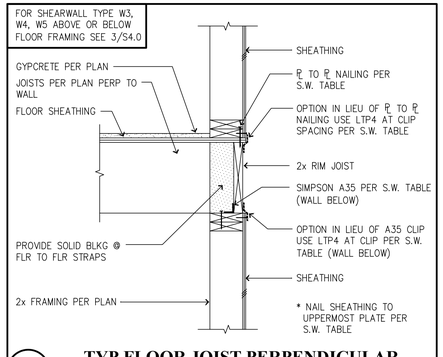

1 TYP FLOOR JOIST PERPENDICULAR TO WALL (W1 ,W2 SHEAR TRANSFER)

THOMAS L. CHASE, PE
MARTIN R. OMAN, PE, SE
OLEG G. KONDRATYUK, PE

4-24-25

Revisions to this sheet:
1 8-30-24 PERMIT CORRECTIONS & OWNER CHANGES

PRMU20240279

Bradley Heights Apartments
202 27th Ave SE
Puyallup, Washington

Solutions 4 Structures
A Structural Engineering Corporation
Puyallup, Washington 98374
Ph 253-314-9822
www.solutions4structures.com

PROJECT NO. : 23.007
DESIGNED BY : TLC, OGK, MRO
DRAWN BY : RSO
ISSUE DATE : 2-20-24
LATEST REV. OF DWG. SET : 1 4-24-25

SUBMITTAL SET ONLY NOT FOR CONSTRUCTION
THESE DRAWINGS ARE SUBJECT TO REVISIONS PENDING LOCAL JURISDICTIONAL REVIEW.

1

S4.0

CAD FILE: F:\Projects\2023 Projects\23.007 Bradley Heights\Drawings\S4.0.dwg
PLOT DATE/TIME: 4/23/2025 - 11:19am THANK YOU FOR USING SOLUTIONS 4 STRUCTURES

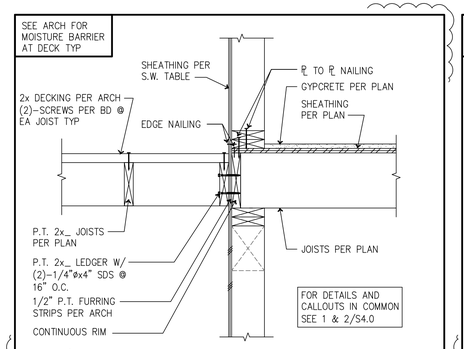

9 EXTERIOR DECK CONNECTION

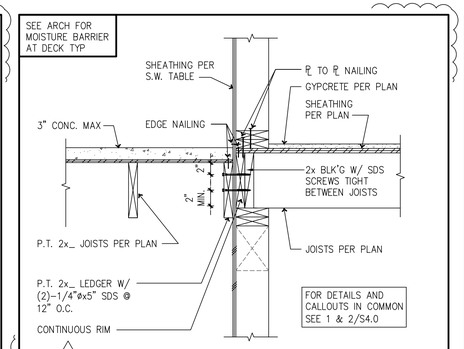

6 EXT. STAIR LANDING CONNECTION

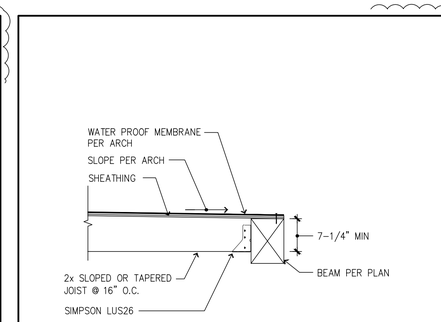

OPTION 2

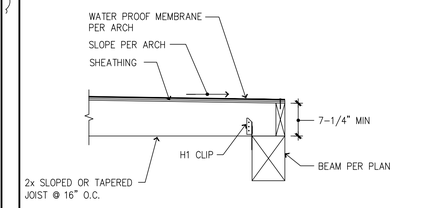

OPTION 1

3 DECK OUTSIDE EDGE

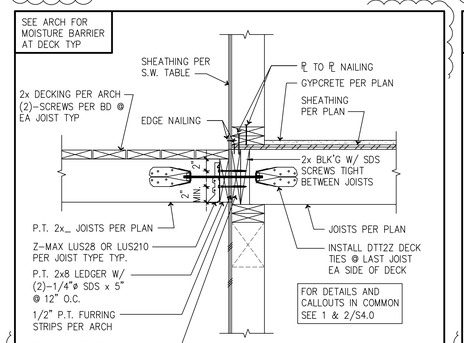

8 EXTERIOR DECK CONNECTION

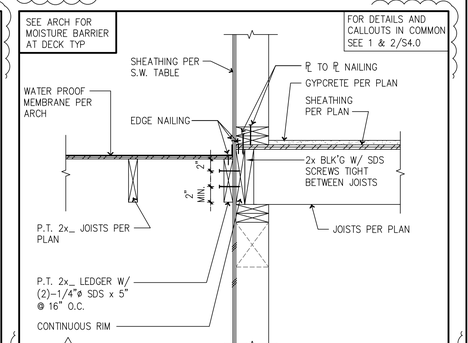

5 EXT. DECK CONNECTION

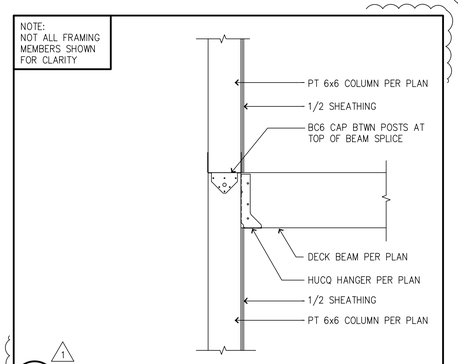

10 DECK BEAM TO POST

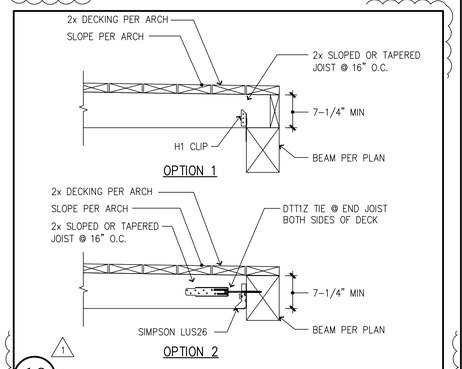

OPTION 2

10 DECK OUTSIDE EDGE

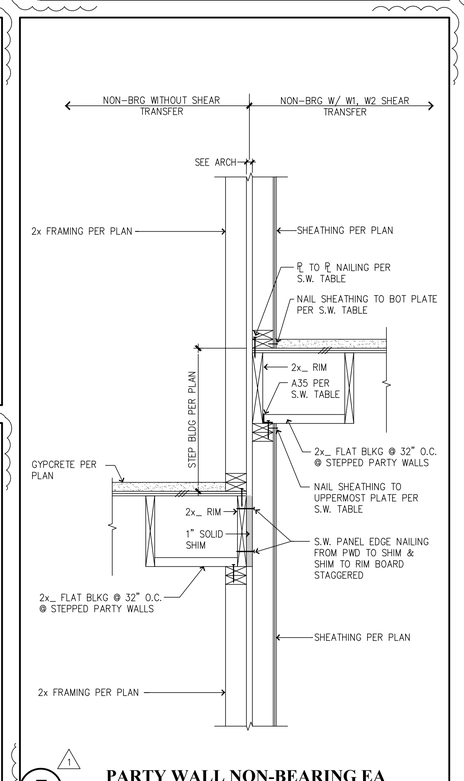

7 PARTY WALL NON-BEARING EA SIDE (W1 ,W2 SHEAR TRANSFER)

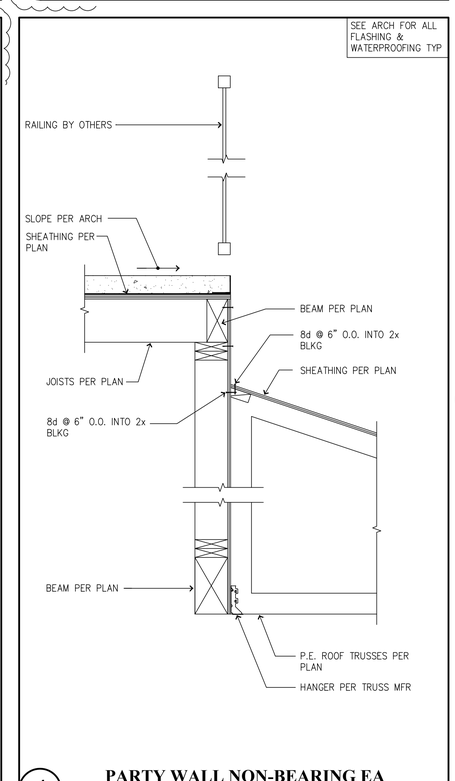

4 PARTY WALL NON-BEARING EA SIDE (W1 ,W2 SHEAR TRANSFER)

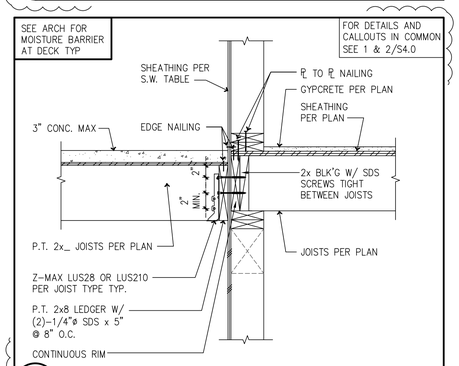

2 EXT. STAIR LANDING CONNECTION

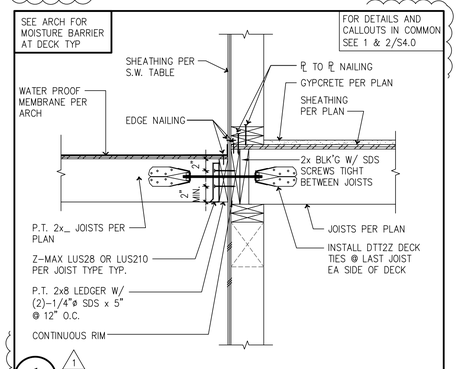

1 EXT. DECK CONNECTION

City of Puyallup
Permit Center & Permitting System
Building Planning
Engineering Fire
Approved 4-24-25
STATE OF WASHINGTON
THOMAS L. CHASE
25006
REGISTERED PROFESSIONAL ENGINEER

THOMAS L. CHASE, PE
MARTIN R. OMAN, PE, SE
OLEG G. KONDRATYUK, PE

Revisions to this sheet:

1 8-30-24 PERMIT CORRECTIONS & OWNER CHANGES

PRMU20240279

Bradley Heights Apartments
202 27th Ave SE
Puyallup, Washington

Solutions 4 Inc. Structures
A Structural Engineering Corporation
Puyallup, Washington 98374
Ph 253-314-9822
www.solutions4structures.com

PROJECT NO.	: 23.007
DESIGNED BY	: TLC, OGK, MRO
DRAWN BY	: RSO
ISSUE DATE	: 2-20-24
LATEST REV. OF DWG. SET	: 1 4-24-25

SUBMITTAL SET ONLY NOT FOR CONSTRUCTION
THESE DRAWINGS ARE SUBJECT TO REVISIONS PENDING LOCAL JURISDICTIONAL REVIEW.

S4.1

CAD FILE: F:\Projects\2023 Projects\23.007 Bradley Heights\Drawings\S4.1.dwg PLOT DATE/TIME: 4/23/2025 – 11:20am THANK YOU FOR USING SOLUTIONS 4 STRUCTURES

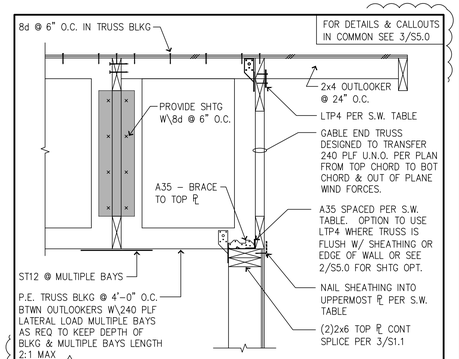

19 ALTERNATE GABLE END CONNECTION

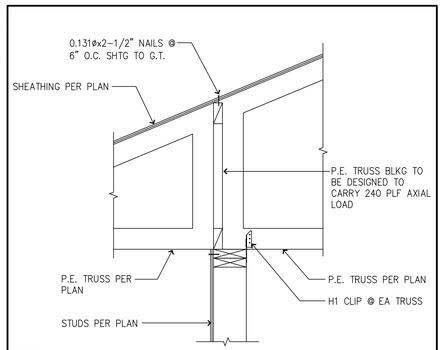

15 P.E. TRUSS TO WALL

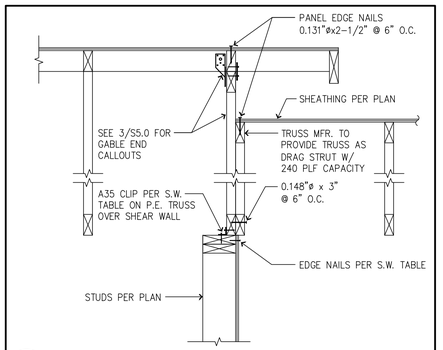

11 SHEAR TRANSFER AT SINGLE SHEAR WALL WITH STEP IN ROOF

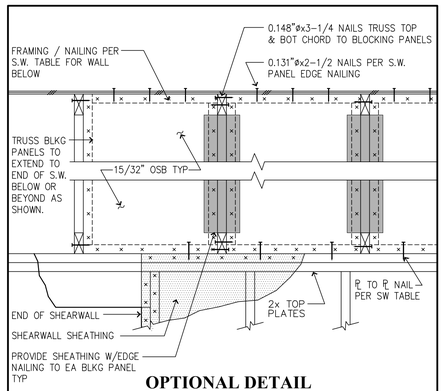

OPTIONAL DETAIL

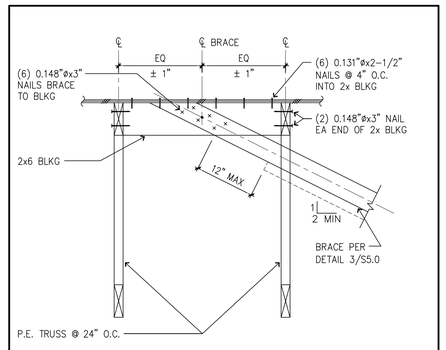

4 2x_ BRACE TO ROOF CONNECTION

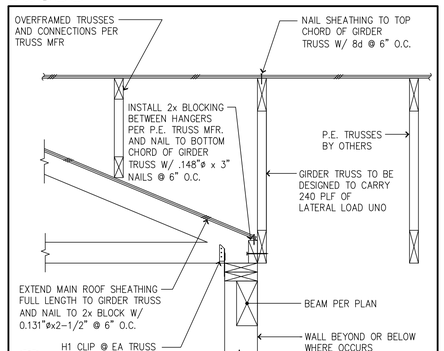

18 SHEAR TRANSFER @ GIRDER TRUSS

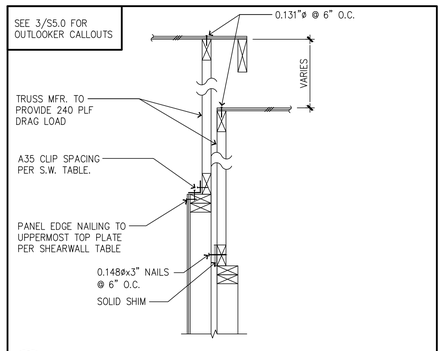

14 ROOF SHEAR TRANFER @ STEPPED PARTYWALL

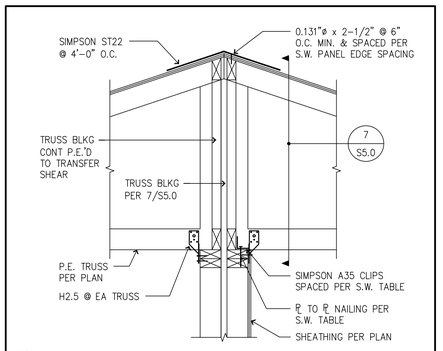

10 ROOF SHEAR TRANSFER TO PARTY WALL @ RIDGE

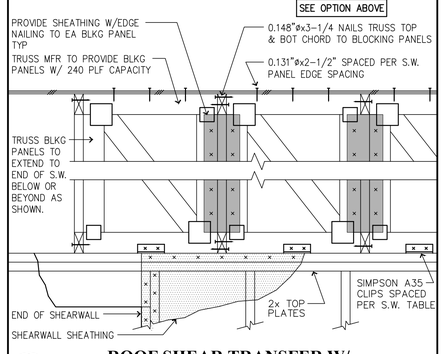

7 ROOF SHEAR TRANSFER W/ TRUSSES PERPENDICULAR

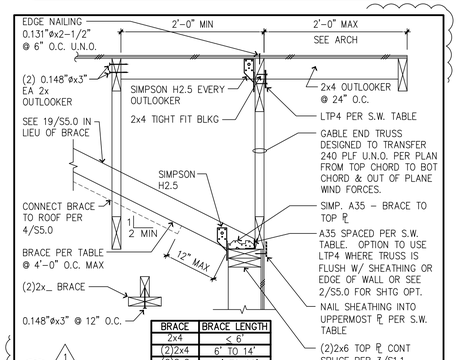

BRACE	BRACE LENGTH
2x4	≤ 6'
(2)2x4	6' TO 14'
(2)2x6	14' TO 22'

3 TYPICAL GABLE END CONNECTION

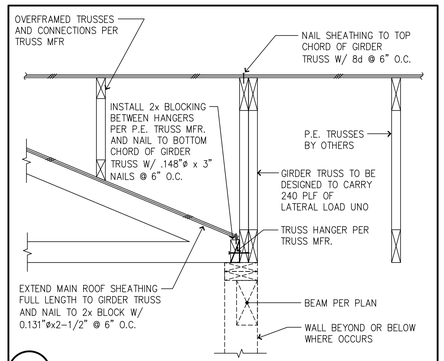

17 SHEAR TRANSFER @ GIRDER TRUSS

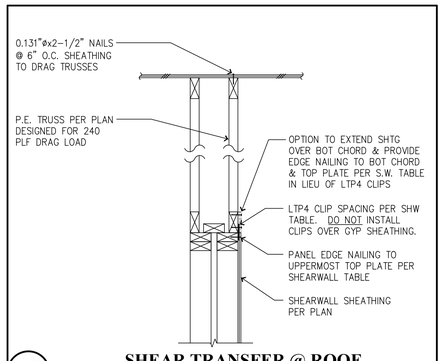

13 SHEAR TRANSFER @ ROOF PARTY WALL

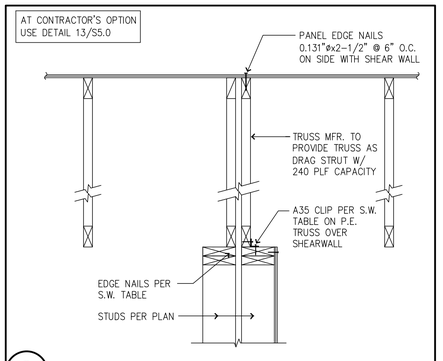

9 SHEAR TRANSFER AT PARTY WALL

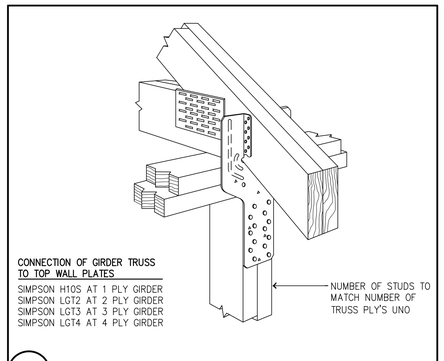

6 GIRDER TRUSS TO WALL CONNECTION

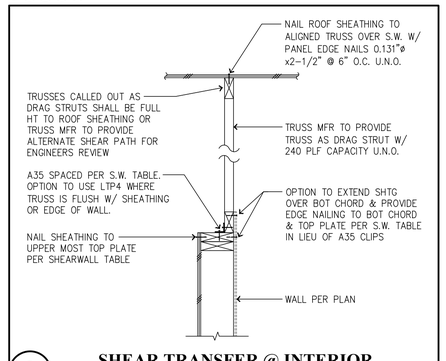

2 SHEAR TRANSFER @ INTERIOR W/ ALIGNED TRUSS

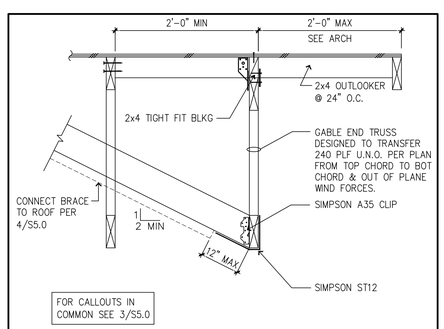

16 OPEN GABLE END CONNECTION

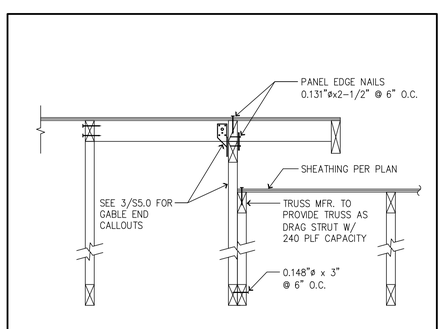

12 SHEAR TRANSFER AT STEP IN ROOF

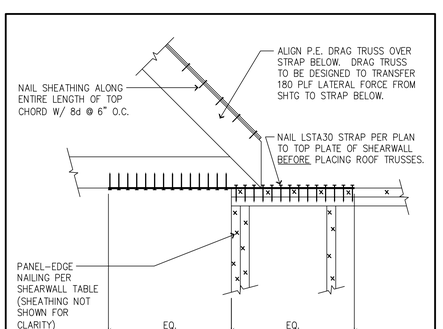

8 DRAG TRUSS TO STRAP @ SHEARWALL TOP PLATE

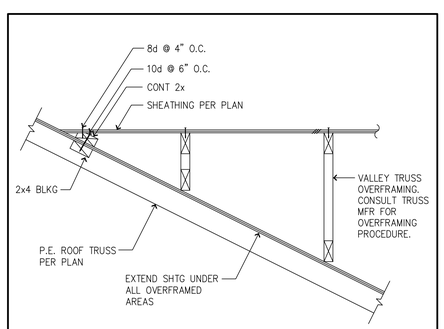

5 TYP CONNECTION @ OVERFRAMING

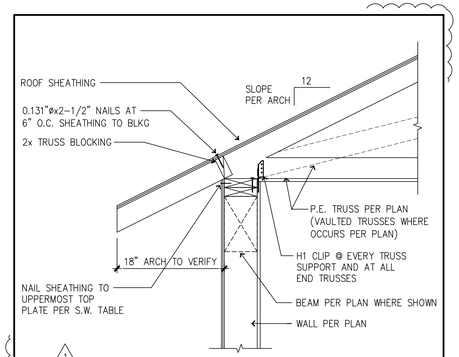

1 TYPICAL EXT. WALL PERP. TO TRUSS

City of Puyallup
Permits & Planning
SHEAR STAMP
Building | Planning
Engineering | Form Date
Inspector | Date

4-24-25

THOMAS L. CHASE, PE
MARTIN R. OMAN, PE, SE
OLEG G. KONDRATYUK, PE

Revisions to this sheet:
1 8-30-24 PERMIT CORRECTIONS & OWNER CHANGES

PRMU20240279

Bradley Heights Apartments
202 27th Ave SE
Puyallup, Washington

Solutions 4 Structures Inc.
A Structural Engineering Corporation
Puyallup, Washington 98374
Ph 253-314-9822
www.solutions4structures.com

PROJECT NO. : 23.007
DESIGNED BY : TLC, OGK, MRO
DRAWN BY : RSO
ISSUE DATE : 2-20-24
LATEST REV. OF DWG. SET : 1 4-24-25

SUBMITTAL SET ONLY NOT FOR CONSTRUCTION
THESE DRAWINGS ARE SUBJECT TO REVISIONS PENDING LOCAL JURISDICTIONAL REVIEW.

S5.0

PLOT DATE/TIME: 4/23/2025 – 11:21am THANK YOU FOR USING SOLUTIONS 4 STRUCTURES
CAD FILE: F:\Projects\2023 Projects\23.007 Bradley Heights\Drawings\S5.0.dwg

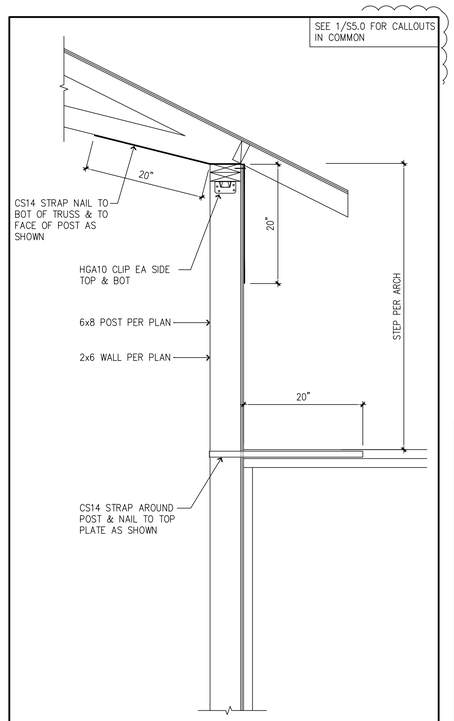

8 SHEAR TRANSFER @ WALL STEP

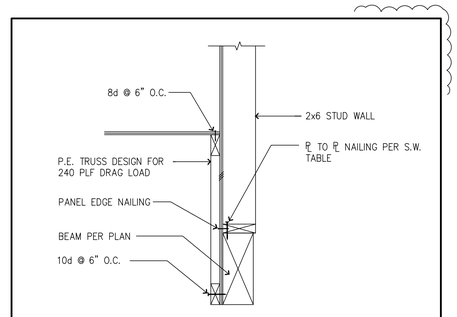

7 JOIST CANTILEVER @ FLOOR

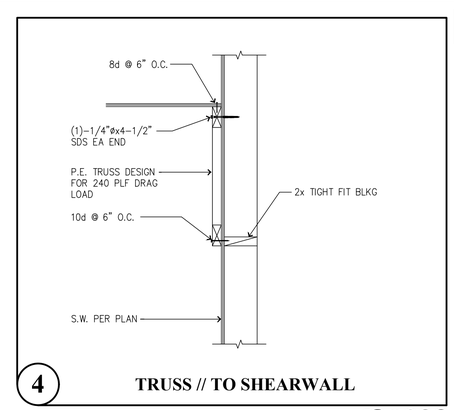

4 TRUSS // TO SHEARWALL

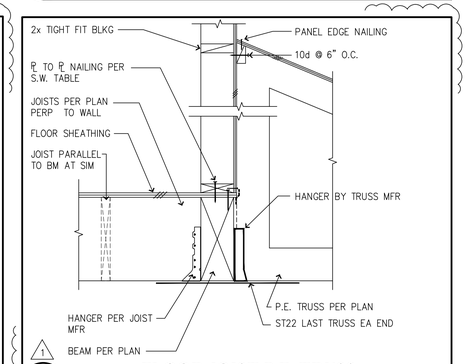

3 FLOOR JOIST P.E. TRUSS PERPENDICULAR TO WALL

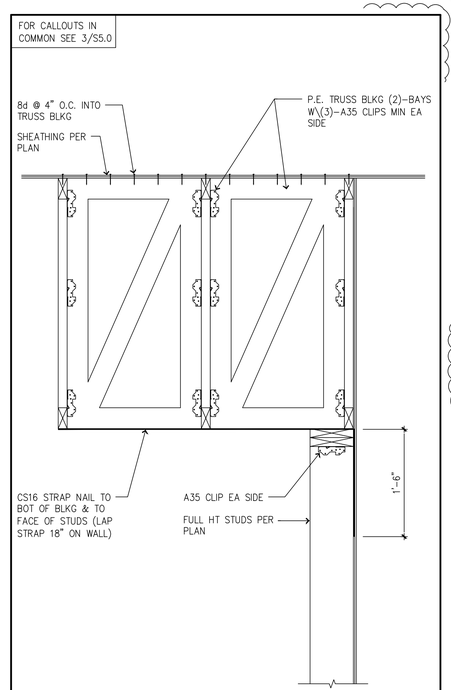

9 P.E. TRUSS BLOCKING CONNECTION

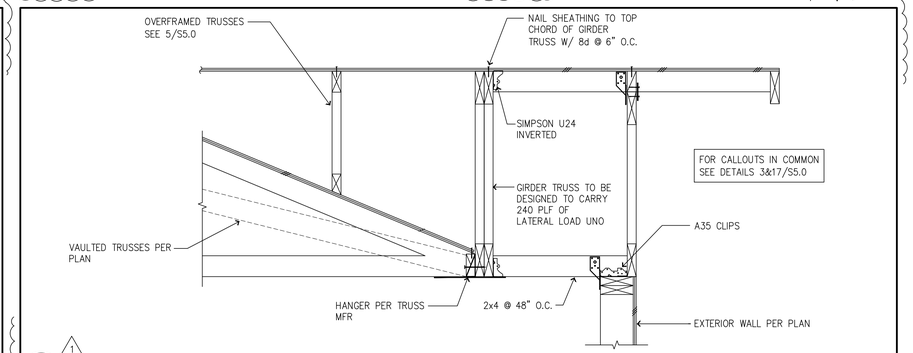

6 SHEAR TRANSFER @ GIRDER TRUSS AND VAULTED CEILING

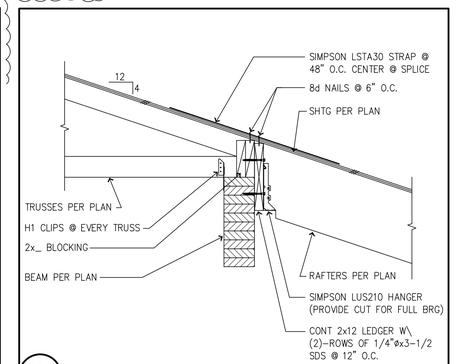

2 RAFTER CONNECTION

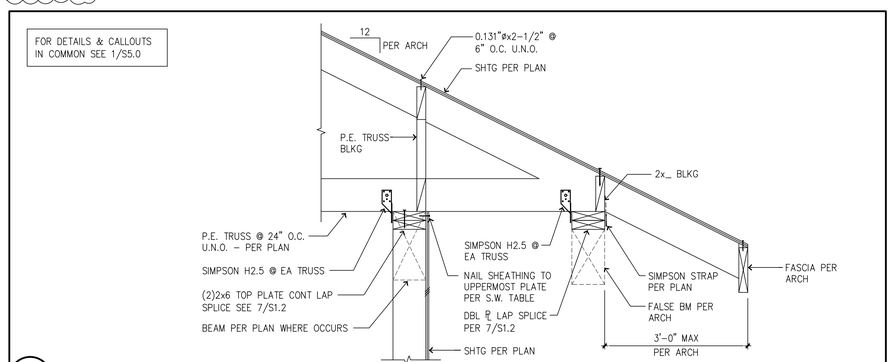

5 BEAM AT BOTTOM OF TRUSS AT SIM. P.E. TRUSS PERP TO WALL CONNECTION

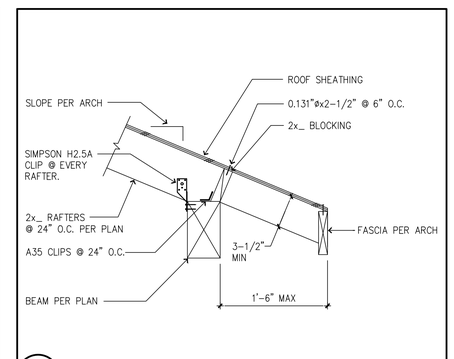

1 CANTILEVERED RAFTER

Solutions 4 Structures A Structural Engineering Corporation

CAD FILE: F:\Projects\2023 Projects\23.007 Bradley Heights\Drawings\S5.1.dwg PLOT DATE/TIME: 4/23/2025 - 11:21am THANK YOU FOR USING SOLUTIONS 4 STRUCTURES

City of Puyallup
Permitting & Inspection Services
Building | Plumbing
Engineering | Fire Marshal
Fire Prevention | Zoning

4-24-25

THOMAS L. CHASE, PE
MARTIN R. OMAN, PE, SE
OLEG G. KONDRATYUK, PE

Revisions to this sheet:

1 8-30-24 PERMIT CORRECTIONS & OWNER CHANGES

PRMU20240279

Bradley Heights Apartments
202 27th Ave SE
Puyallup, Washington

Solutions 4 Structures Inc.
A Structural Engineering Corporation
Puyallup, Washington 98374
Ph 253-314-9822
www.solutions4structures.com

PROJECT NO. : 23.007
DESIGNED BY : TLC, OGK, MRO
DRAWN BY : RSO
ISSUE DATE : 2-20-24
LATEST REV. OF DWG. SET : 1 4-24-25

SUBMITTAL SET ONLY NOT FOR CONSTRUCTION
THESE DRAWINGS ARE SUBJECT TO REVISIONS PENDING LOCAL JURISDICTIONAL REVIEW.

S5.1

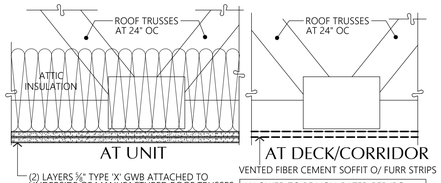

(2) LAYERS ⅝" TYPE 'X' GWB ATTACHED TO UNDERSIDE OF MANUFACTURED ROOF TRUSSES AT 24" O.C. PROVIDE PVA WALL PRIMER (with perm rating not exceeding 1.0) AS CLASS II VAPOR RETARDER ON INSIDE FACE OF GWB

ALLOWED TO BE NON-RATED PER IBC SECTIONS 705.2.2 & 705.2.3 WHERE SPRINKLER PROTECTION EXTENDS TO THE DECK

1-HR GA File No. RC 2602

Base layer ⅝" type X gypsum wallboard applied at right angles to wood roof trusses 24" o.c. with 1¼" Type W or S drywall screws 24" o.c. **Face** layer ⅝" type X gypsum wallboard or gypsum veneer base applied at right angles to trusses with 1⅝" Type W or S drywall screws 12" o.c. at joints and intermediate trusses and 1½" Type G drywall screws 12" o.c. placed 2" back on either side of end joints. Joints offset 24" from base layer joints. Wood trusses supporting ½" wood structural panels applied at right angles to trusses with 8d nails. Appropriate roof covering. Ceiling provides one hour fire resistance protection for trusses.

17 TYPICAL 1-HR ROOF/CEILING

1-1/2" = 1'-0" SECTION

1 HR. UL L514 SYSTEM 9

Finish Flooring - Floor Topping Mixture* - Min. 3/4 in. thickness of floor topping mixture having a minimum compressive strength of 1500 psi. Refer to manufacturer's instructions accompanying the material for specific mix design.
Formulated Materials LLC - Types FR-25, FR-30 and SiteMx
Vapor Barrier - (Optional) Commercial asphalt saturated felt 0.030 in. thick.
Sub-flooring - 15/32 in thick plywood min grade "C-D" of Sheathing. Face grain of plywood to be perpendicular to joists with joints staggered.
Alternate Floor Mat Material* - (Optional) Floor mat material nominal 2-9.5 mm thick loose laid over the subfloor. Floor topping thickness shall be a minimum of 3/4 in.
Formulated Materials LLC - Types M1, M2, M3, Elite, Duo, R1 and R2
2. Wood Joists - Min. 2 by 10, spaced 16 in. OC, firestopped
3. Cross Bridging - 1 by 3 in. or min. 2x10 solid blocking
5. Resilient Channels - Formed of 25 MSG galv steel, spaced 24 in. OC perpendicular to joists. Channels overlapped at splices 4 in. and fastened to each joist with 1 1/4 in. long furring channel screw.
6B. Gypsum Board* - Nom.⅝" in. thick, 4 ft wide, installed with long dimension perpendicular to resilient channels and the side edges of the board located between joists. Fastened to resilient channels with 1 in. long Type S bugle head screws spaced 8 in. OC. End joints of wallboard similarly fastened to additional pieces of resilient channel to extend a min of 3 in. beyond ends of butt joint. Screw located 3/4 in min distance from sides and 1/2 in. min from ends of wallboard sheets.
7. Finish System - Vinyl, dry or premixed joint compound, applied in two coats to joints and screw-heads. Nom 2 in. wide paper tape embedded in first layer of compound over all joints. As an alternate, nom 3/32 in. thick veneer plaster may be applied to the entire surface of gypsum board.

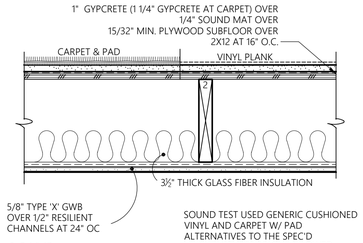

SOUND TEST USED GENERIC CUSHIONED VINYL AND CARPET W/ PAD ALTERNATIVES TO THE SPEC'D MANUFACTURES BELOW ALLOWED.

SOUND

60 STC	R-TL 81-16
55 IIC	R-IN 81-1 CUSHIONED VINYL
56 IIC	R-IN 81-6 CARPET & PAD*

CARPET & PAD - ASCEND BY DWELLINGS MOHAWK VESSEL PAD
VINYL PLANK - CYRUS BY MSI

*TEST WAS DONE WITHOUT GLASS FIBER INSULATION. ADDITION WILL INCREASE THE IIC VALUE.

13 TYPICAL FLOOR

1 1/2" = 1'-0" SECTION

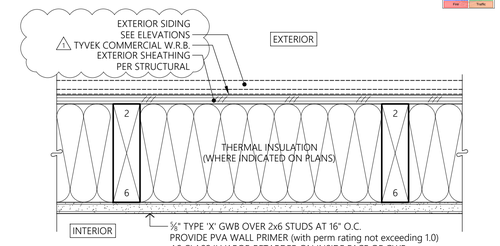

2X6 STUDS AT EXTERIOR WALL U.N.O. ON PLANS

1 TYPICAL EXTERIOR WALL

3" = 1'-0" PLAN

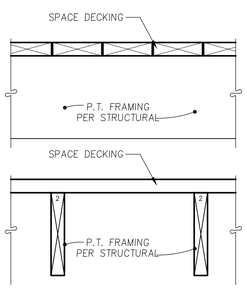

18 SPACED DECKING FLOOR

1 1/2" = 1'-0" SECTION

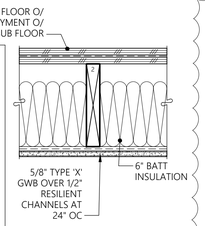

1 HR. GA File No. FC5538

1/2" type X gypsum wallboard or veneer base applied at right angles to resilient furring channels 24" o.c. with 1" Type S drywall screws 8" o.c. at ends and 12" o.c. at intermediate furring channels. Gypsum board end joints located midway between continuous channels and attached to additional pieces of channel 64" long with screws 8" o.c. Resilient channels applied at right angles to 2 x 10 wood joists 16" o.c. with 6d coated nails 1⅞" long,.085 shank, ⅞" heads, two per joist. Wood joists supporting ⅝" interior plywood with exterior glue subfloor and ⅜" particle board, 1.5 psf. 3½" glass fiber insulation batts, .7 pcf, friction fit in joist cavities supported alternately every 12" by wire rods and resilient channels.

SOUND

51 STC	TL 03-061a
61 IIC	(BASED ON ENGINEERING ANALYSIS OF TL 03-027 WITH THE ADDITION OF ¼" ISO-STEP UNDERLAYMENT (42 IIC + 19 IIC))

14 FLOOR BENEATH TUB

1 1/2" = 1'-0" SECTION

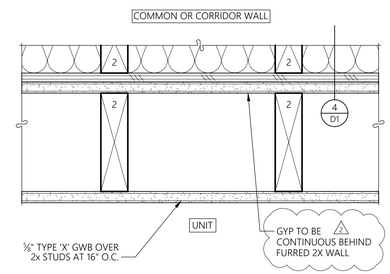

6 FURRED PLUMBING WALL

3" = 1'-0" PLAN

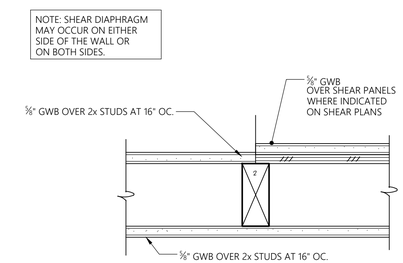

2 TYP. INTERIOR WALL

3" = 1'-0" PLAN

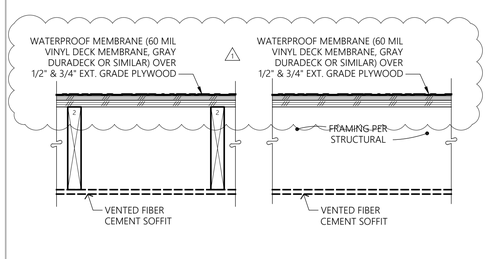

ASSEMBLY ALLOWED TO BE NON-RATED PER OSSC SECTIONS 705.2.2 AND 705.2.3 WITH FIRE SPRINKLERS PROTECTING DECK

19 WATERPROOF DECK FLOOR

1 1/2" = 1'-0" SECTION

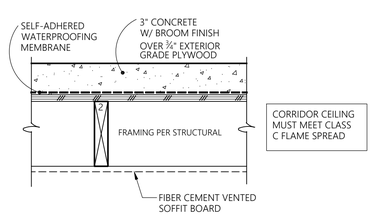

CORRIDOR CEILING MUST MEET CLASS C FLAME SPREAD

15 FLOOR AT CORRIDOR/LANDING

1-1/2" = 1'-0" SECTION

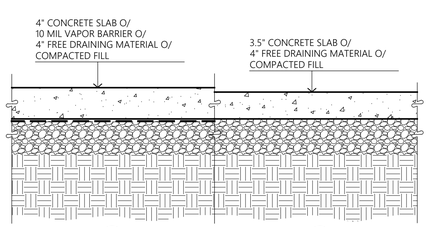

20 TYP. SLAB-ON-GRADE

1-1/2" = 1'-0" SECTION

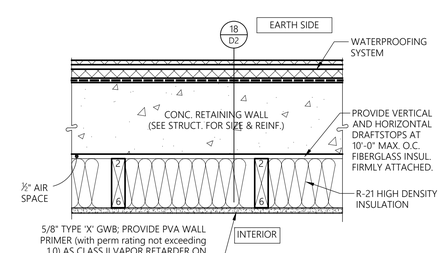

NO SPRAY-ON OR SHEET-TYPE VAPOR BARRIER AT INTERIOR SIDE. PAINT W/ LATEX PAINT ONLY.

CONCRETE WALL SHALL BE DRY TO THE TOUCH AND CAVITY SHALL BE CLEAN OF DEBRIS BEFORE INSTALLING INSULATION AND GWB.

8 BASEMENT RETAINING WALL

1-1/2" = 1'-0" PLAN

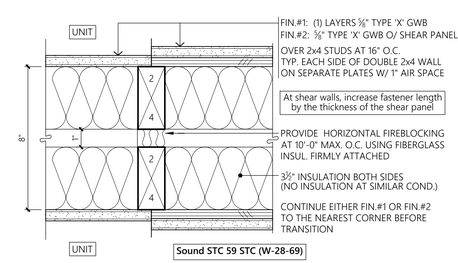

1-HR Using Calculated Fire Resistance Method

Using IBC Section 722, Tables 722.6.2(1) and 722.6.2(2), ⅝" Type 'X' GWB (40 min.) and studs at 16" o.c. (20 min.) provide 60 minutes of protection

DETAIL SIMILAR WHERE UNIT SEPARATION WALL CONTINUES DOWN TO GARAGES

4 TYP. 1-HR COMMON WALL SEPARATING DWELLING UNITS

3" = 1'-0" PLAN

MILBRANDT ARCHITECTS
25 Central Way, Suite 210
Kirkland, Washington 98033
P: 425.454.7130 F: 425.658.1208
Web: www.milbrandtarch.com

© Copyright 2023
Milbrandt Architects, INC., P.S.
All rights reserved

11063 REGISTERED ARCHITECT
ANNA P. THOMPSON
STATE OF WASHINGTON

Details

Bradley Heights Apartments
Puyallup, Wa

Timberlane Partners

Revisions

No.	Date	Description
1	8-30-24	Owner Changes/ Permit Corrections

PRMU20240279

Initial Publish Date:
Date Plotted: 5-6-25
Job No.: 23-06
Drawn By: APT/HDM
Sheet No.: D1

F:\2306\DETAILS (D1-D2).DWG

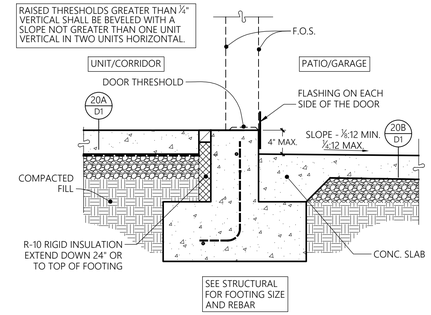

5 SWING DOOR THRESHOLD
AT PATIO OR GARAGE

1" = 1'-0" SECTION

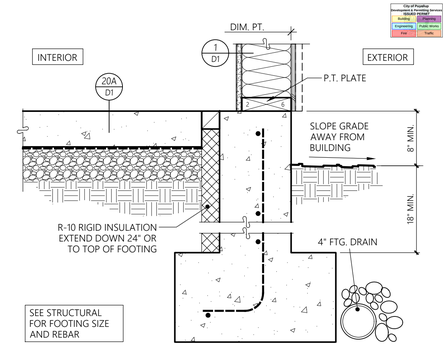

1 TYP. EXTERIOR WALL FOOTING

1-1/2" = 1'-0" SECTION

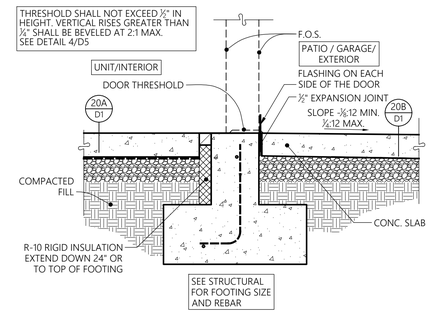

6 SWING DOOR THRESHOLD
AT ACCESSIBLE ENTRANCE

1" = 1'-0" SECTION

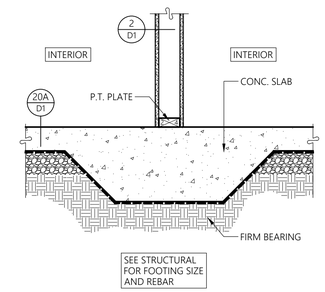

2 INTERIOR WALL FOOTING

1" = 1'-0" SECTION

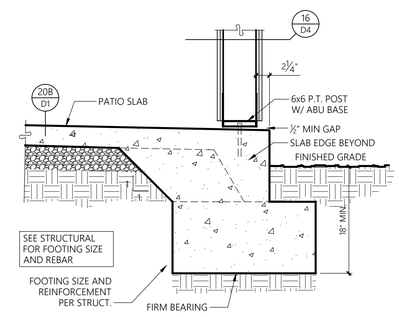

7 POST FOOTING AT PATIO

1" = 1'-0" SECTION

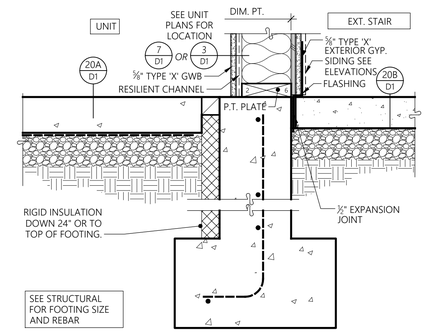

3 TYP. STAIR WALL FOOTING

1 1/2" = 1'-0" SECTION

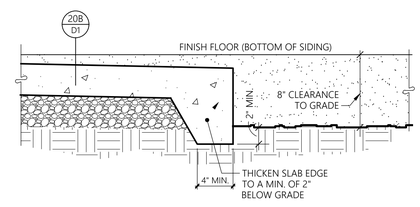

8 THICIKENED CONC. SLAB EDGE
AT PORCH / PATIO

1-1/2" = 1'-0" SECTION

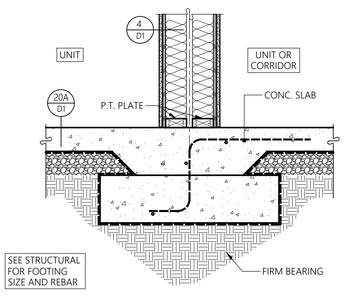

4 COMMON WALL FOUNDATION

1" = 1'-0" SECTION

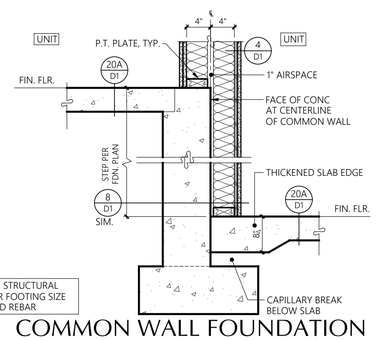

16 COMMON WALL FOUNDATION UNIT -T0- UNIT AT STEP

1" = 1'-0" SECTION

City of Puyallup
Permitted & Inspected Across Multiple Disciplines
Building | Planning | Engineering | Public Works | Fire | Parks

MILBRANDT ARCHITECTS

25 Central Way, Suite 210
Kirkland, Washington 98033
P: 425.454.7130 F: 425.658.1208
Web: www.milbrandtarch.com

© Copyright 2023
Milbrandt Architects, INC., P.S.
All rights reserved

11063 REGISTERED ARCHITECT
ANNA P. THOMPSON
STATE OF WASHINGTON

Details

Bradley Heights Apartments

Puyallup, Wa

Timberlane Partners

Revisions

No.	Date	Description

PRMU20240279

Initial Publish Date:

Date Plotted: 5-1-25

Job No.: 23-06

Drawn By: APT/HDM

Sheet No.: D2

A:\2306\DETAILS (D1-D3).DWG

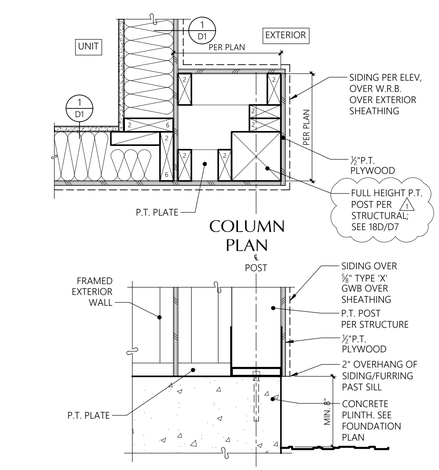

17 FURRED COLUMN

1-1/2" = 1'-0"

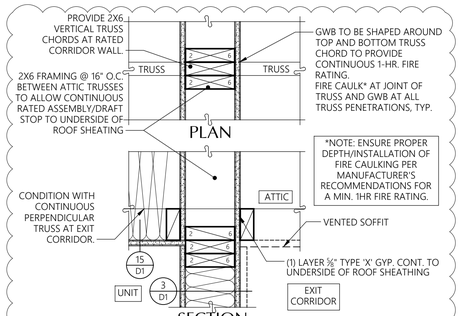

18 ATTIC SEPARATION @ CONT. PERP. TRUSS @ RATED CORRIDOR WALL

1 1/2" = 1'-0"

PLAN/SECTION

DETAIL REMOVED

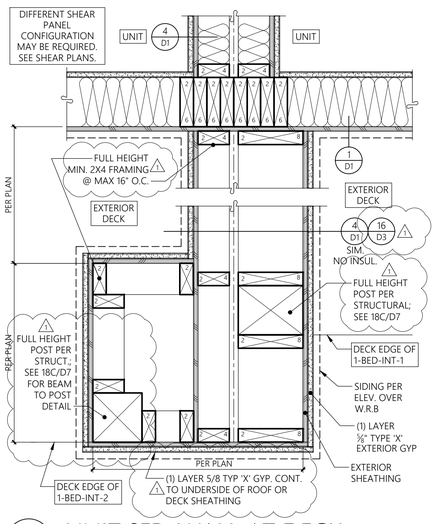

15 UNIT SEP. WALL AT DECK

1-1/2" = 1'-0"

PLAN

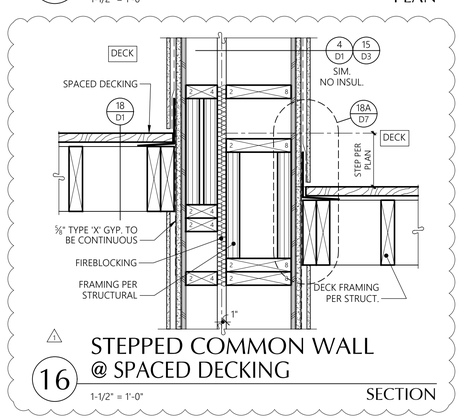

16 STEPPED COMMON WALL @ SPACED DECKING

1-1/2" = 1'-0"

SECTION

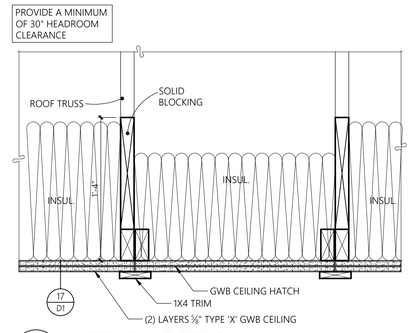

9 ATTIC ACCESS

1-1/2" = 1'-0"

SECTION

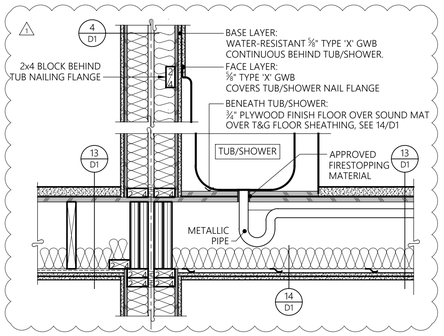

10 TUB/SHOWER AT 1-HR SEP. WALL

1" = 1'-0"

SECTION

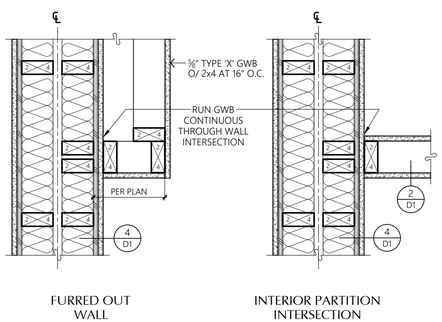

11 INTERIOR WALL AT UNIT SEP. WALL

1-1/2" = 1'-0"

PLAN

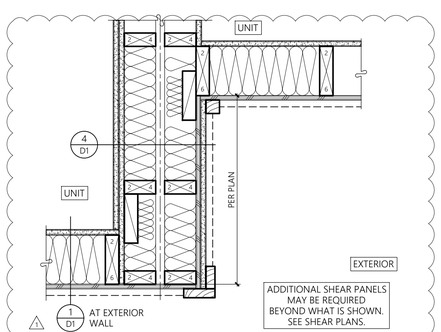

12 UNIT SEP. WALL AT BLDG. JOG

1-1/2" = 1'-0"

PLAN

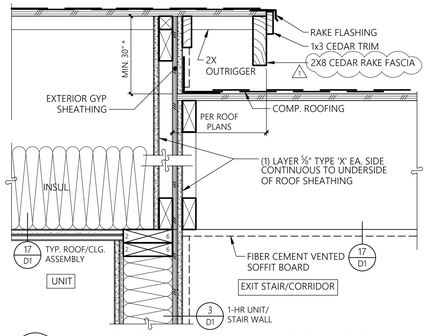

5 1-HR STAIR WALL AT ROOF

1-1/2" = 1'-0"

SECTION

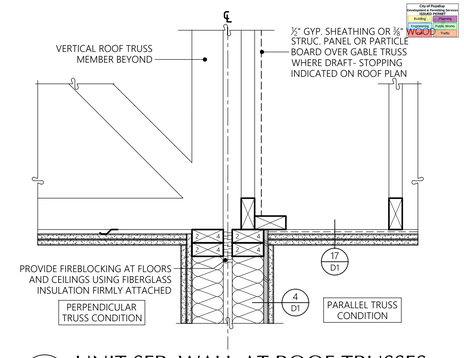

1 UNIT SEP. WALL AT ROOF TRUSSES

1-1/2" = 1'-0"

SECTION

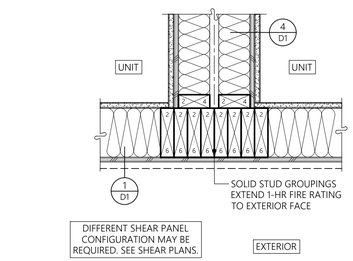

6 UNIT SEP. WALL AT EXT. WALL

1-1/2" = 1'-0"

PLAN

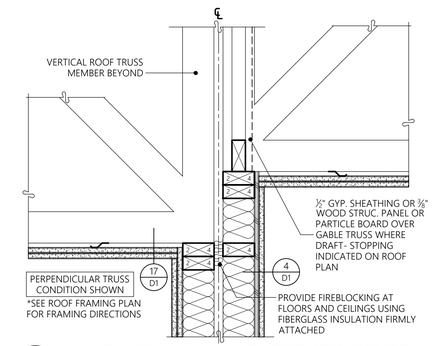

7 UNIT SEP. WALL AT STEPPED ROOF

1-1/2" = 1'-0"

SECTION

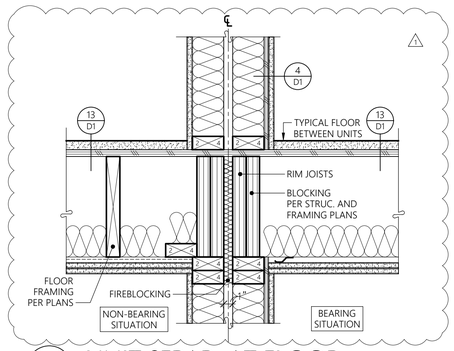

2 UNIT SEPAR. AT FLOOR

1-1/2" = 1'-0"

SECTION

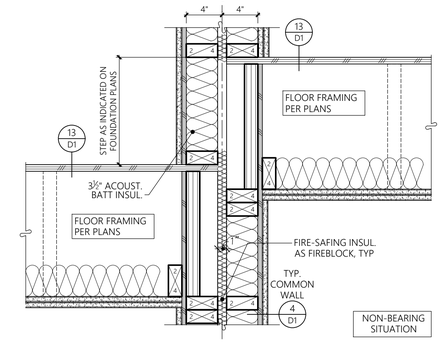

3 COMMON WALL AT STEPPED FLOOR

1-1/2" = 1'-0"

SECTION

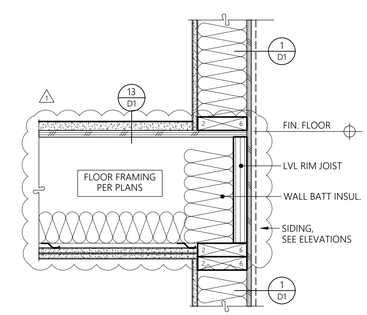

4 EXTERIOR WALL AT FLOOR

1-1/2" = 1'-0"

SECTION

MILBRANDT ARCHITECTS

25 Central Way, Suite 210
Kirkland, Washington 98033
P: 425.454.7130 F: 425.658.1208
Web: www.milbrandtarch.com

© Copyright 2023
Milbrandt Architects, INC., P.S.
All rights reserved

11063 REGISTERED ARCHITECT
ANNA P. THOMPSON
STATE OF WASHINGTON

Details

Bradley Heights Apartments

Puyallup, Wa

Timberlane Partners

Revisions

No.	Date	Description
1	8-30-24	Owner Changes/ Permit Corrections

PRMU20240279

Initial Publish Date:

Date Plotted: 5-1-25

Job No.: 23-06

Drawn By: APT/HDM

Sheet No.: D3

F:\2306\DETAILS (D1-D4)1.DWG

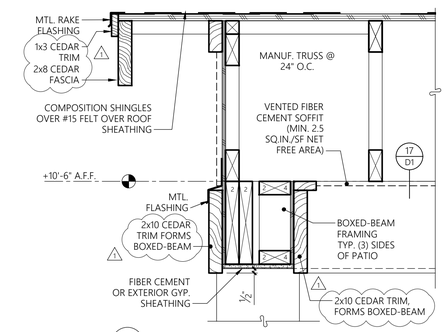

A BOX BEAM AT RAKE

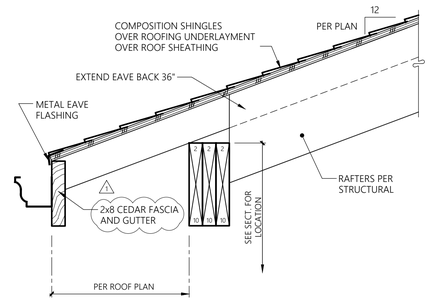

13 EXIT STAIR ROOF OVERHANG

1-1/2" = 1'-0" SECTION

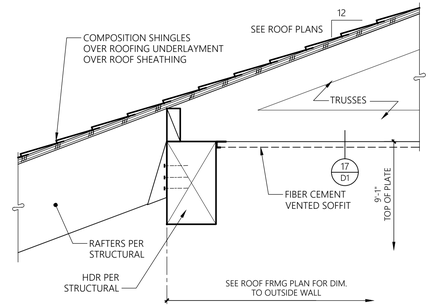

9 EXIT STAIR ROOF

1-1/2" = 1'-0" SECTION

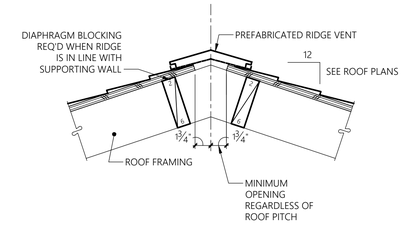

5 RIDGE VENT

1-1/2" = 1'-0" SECTION

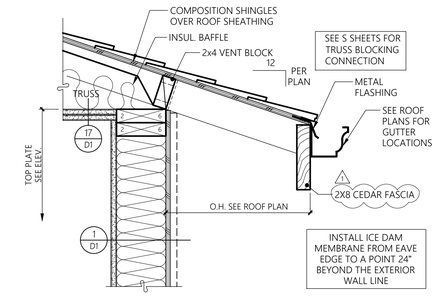

1 EAVE OVERHANG

1-1/2" = 1'-0" SECTION

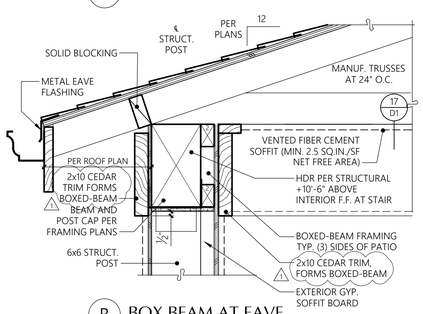

B BOX BEAM AT EAVE

17 ENTRY BOX-BEAM DETAILS

1-1/2" = 1'-0" SECTION

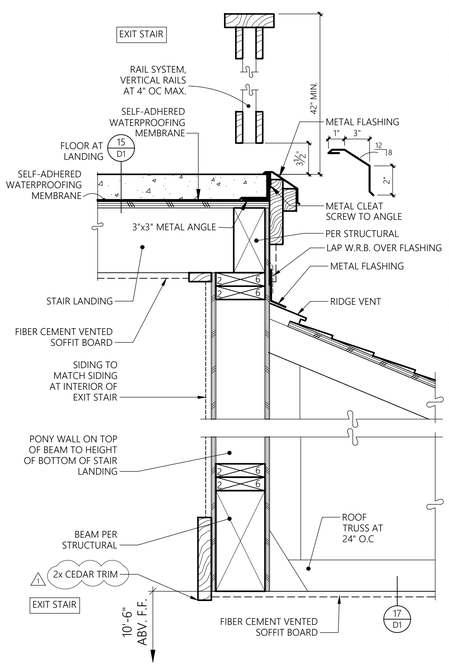

15 GUARD AT LANDING

1-1/2" = 1'-0" SECTION

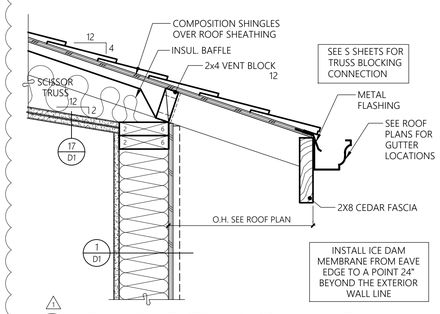

10 EAVE AT CEILING VAULT

1-1/2" = 1'-0" SECTION

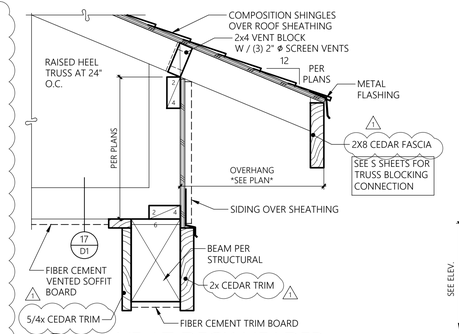

6 EAVE AT DECK HEADER

1-1/2" = 1'-0" SECTION

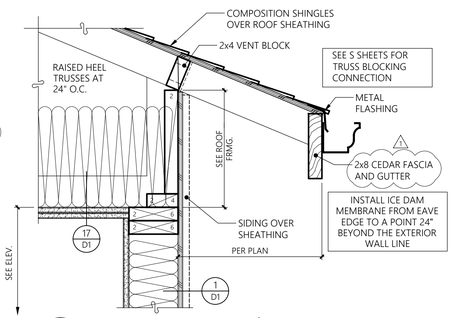

2 OVERHANG W/ RAISED HEEL

1-1/2" = 1'-0" SECTION

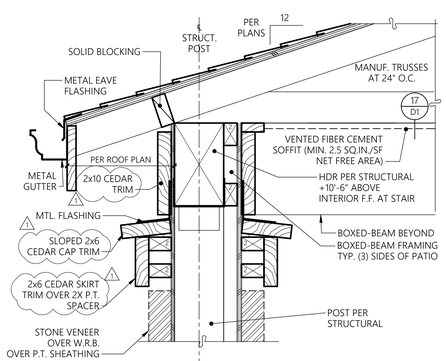

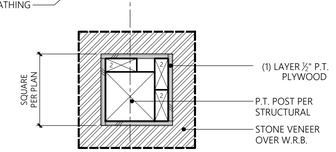

COLUMN PLAN

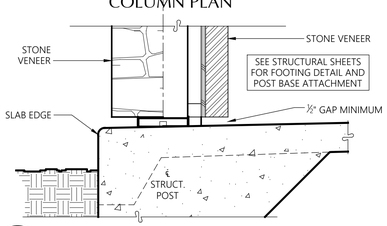

20 ENTRY COLUMN AND LOW ROOF

1-1/2" = 1'-0"

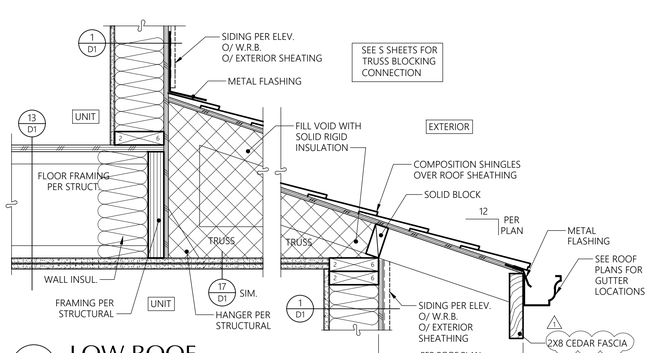

16 LOW ROOF

1-1/2" = 1'-0" SECTION

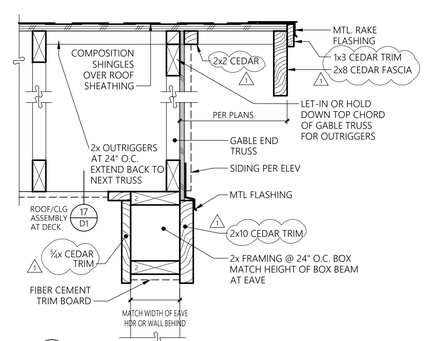

A Rake @ Deck @ 2-Bed Unit

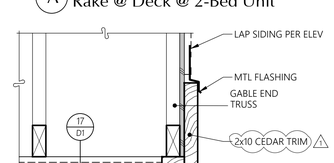

B Deck @ 1-Bed Unit @ Lap siding

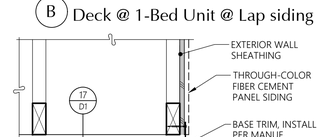

C Deck @ 1-Bed Unit @ Panel Siding

7 RAKE AT DECK

1-1/2" = 1'-0" SECTION

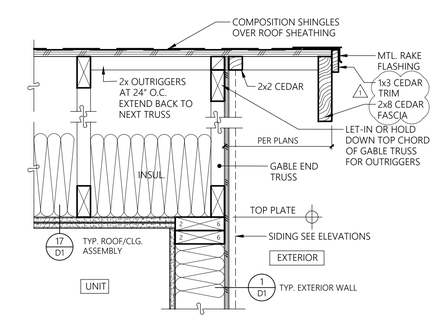

3 EXTERIOR WALL AT ROOF

1-1/2" = 1'-0" SECTION

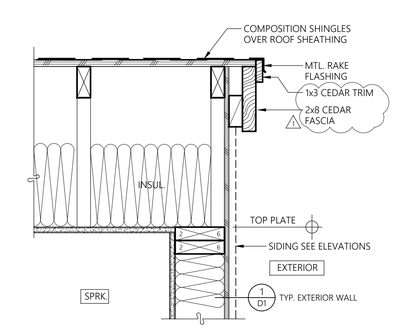

4 SPRK./ELEC. ROOM RAKE

1-1/2" = 1'-0" SECTION

MILBRANDT ARCHITECTS
25 Central Way, Suite 210
Kirkland, Washington 98033
P: 425.454.7130 F: 425.658.1208
Web: www.milbrandtarch.com

© Copyright 2023
Milbrandt Architects, INC., P.S.
All rights reserved

11063 REGISTERED ARCHITECT
ANNA P. THOMPSON
STATE OF WASHINGTON

Details

Bradley Heights Apartments

Puyallup, Wa

Timberlane Partners

Revisions

No.	Date	Description
1	8-30-24	Owner Changes/ Permit Corrections

PRMU20240279

Initial Publish Date:

Date Plotted: 5-1-25

Job No.: 23-06

Drawn By: APT/HDM

Sheet No.: D4

F:\2306\DETAILS (D1-DX).DWG

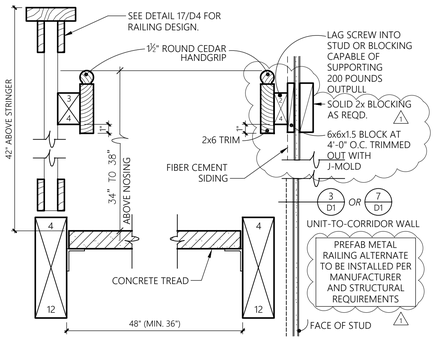

17 STRINGER/RAILING AT WALL
1 1/2" = 1'-0"
SECTION

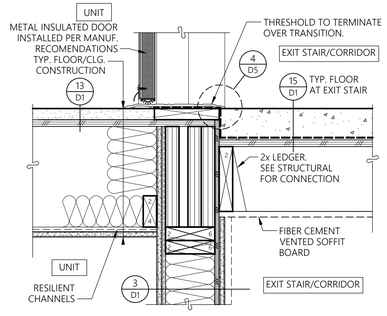

13 ENTRY DOOR THRESHOLD
1-1/2" = 1'-0"
SECTION

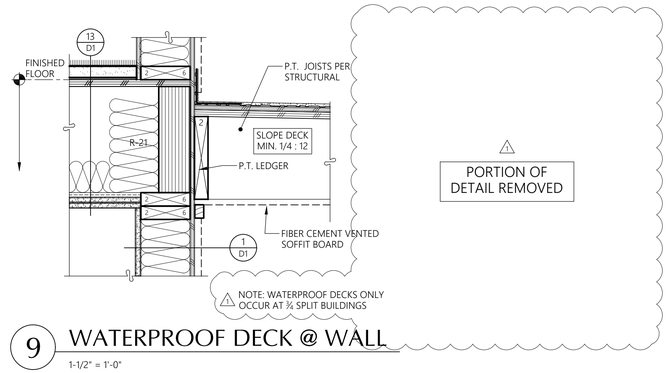

9 WATERPROOF DECK @ WALL
1-1/2" = 1'-0"

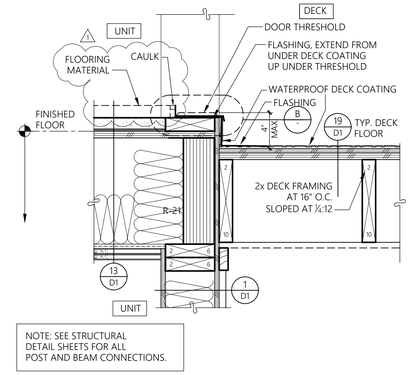

A PATIO SWING DOOR STANDARD THRESHOLD

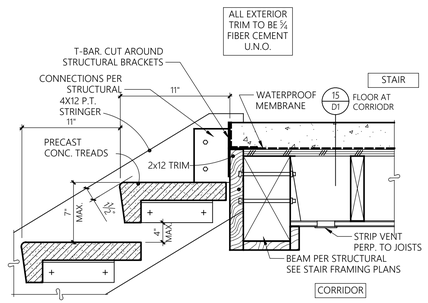

18 UPPER FLOOR STAIR DETAIL
1 1/2" = 1'-0"
SECTION

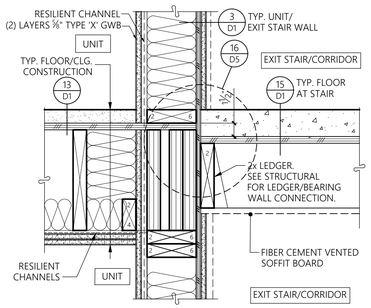

14 STAIR WALL AT FLOOR
1-1/2" = 1'-0"
SECTION

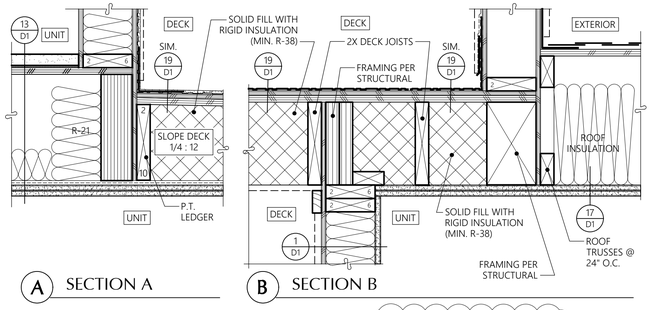

A SECTION A
B SECTION B

10 DECK OVER UNIT BELOW
1-1/2" = 1'-0"

NOTE: CONDITION ONLY OCCURS AT ¾ SPLIT BUILDINGS

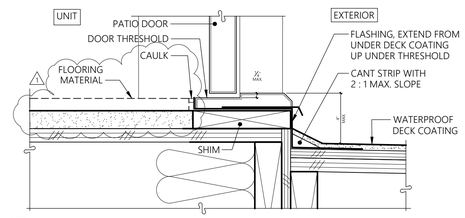

B PATIO SWING DOOR STANDARD THRESHOLD

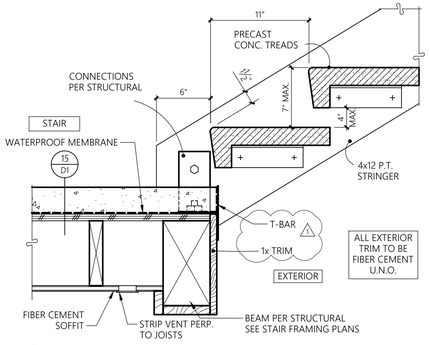

19 UPPER FLOOR STAIR DETAIL
1 1/2" = 1'-0"
SECTION

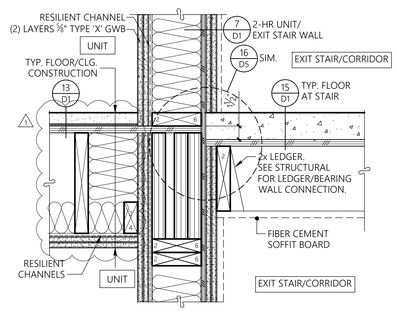

15 2-HR STAIR WALL AT FLOOR
1-1/2" = 1'-0"
SECTION

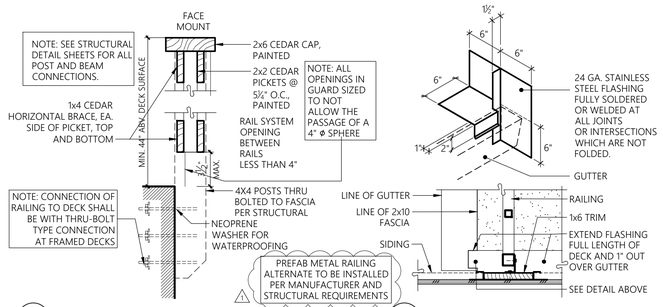

A TYPICAL GUARD RAILING
B RAIL AT WALL

11 GUARD RAIL DETAILS
1-1/2" = 1'-0"

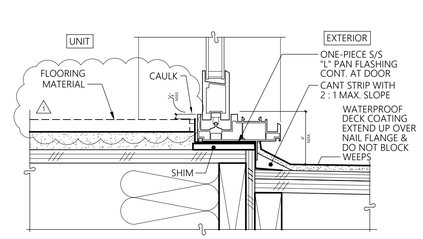

C SLIDING GLASS DOOR STANDARD CONDITION

2 WATERPROOF DECK THRESHOLD DETAILS
SECTION

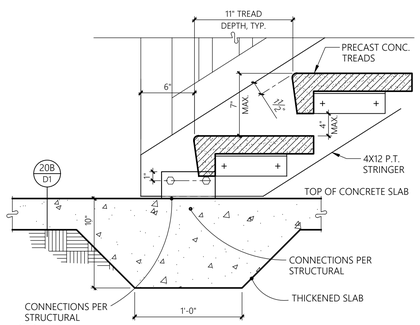

20 STAIR AT BASE
1-1/2" = 1'-0"
SECTION

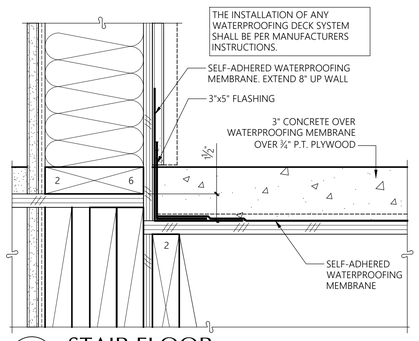

16 STAIR FLOOR
3" = 1'-0"
SECTION

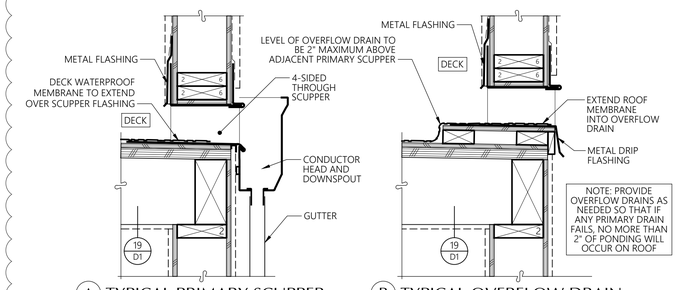

A TYPICAL PRIMARY SCUPPER
B TYPICAL OVERFLOW DRAIN

12 SCUPPER AT WATERPROOF DECK
1-1/2" = 1'-0"

NOTE: WATERPROOF DECKS ONLY OCCUR AT ¾ SPLIT BUILDINGS

CHANGES IN LEVEL

CHANGES IN LEVLE OF 1/4" MAX. SHALL BE PERMITTED TO BE VERTICAL AND WITHOUT EDGE TREATMENT.

CHANGES IN LEVEL BETWEEN 1/4" AND 1/2" MAX. SHALL BE BEVELED WITH A SLOPE NOT STEEPER THAN 1:2

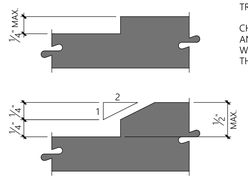

4 DOOR CHANGES IN LEVEL
1" = 1'-0"
SECTION

City of Puyallup
Community & Economic Development
Building Division
Building
Engineering
Public Works
Fire
Parks

MILBRANDT ARCHITECTS

25 Central Way, Suite 210
Kirkland, Washington 98033
P: 425.454.7130 F: 425.658.1208
Web: www.milbrandtarch.com

© Copyright 2023
Milbrandt Architects, INC., P.S.
All rights reserved

11063 REGISTERED ARCHITECT
ANNA P. THOMPSON
STATE OF WASHINGTON

Details

Bradley Heights Apartments

Puyallup, Wa

Timberlane Partners

Revisions

No.	Date	Description
1	8-30-24	Owner Changes/ Permit Corrections

PRMU20240279

Initial Publish Date:
Date Plotted: 5-1-25
Job No.: 23-06
Drawn By: APT/HDM
Sheet No.: D5

FL:\23-06\DETAILS (01-D5)\DWG

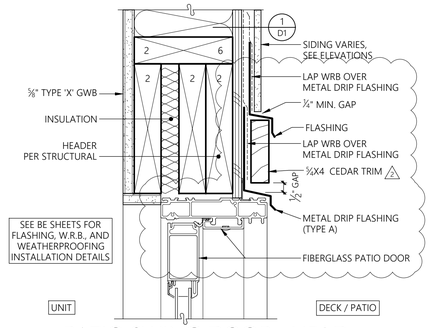

17 PATIO SWING DOOR - HEAD
UNIT DECK OR PATIO

3" = 1'-0" SECTION

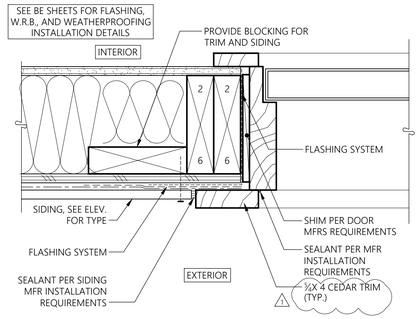

13 EXTERIOR DOOR JAMB

3" = 1'-0" SECTION

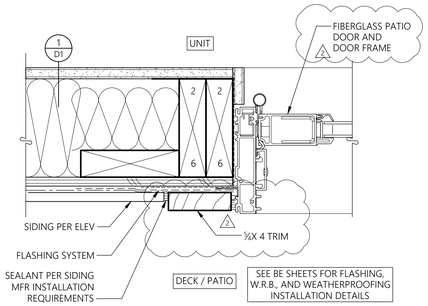

18 PATIO SWING DOOR - JAMB
UNIT DECK OR PATIO

3" = 1'-0" PLAN

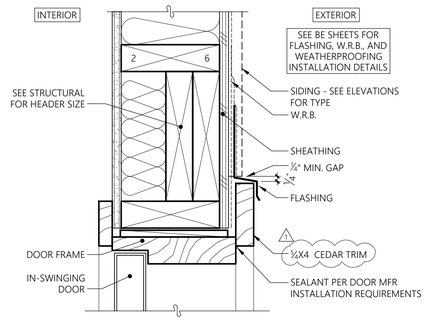

14 EXTERIOR DOOR HEAD

3" = 1'-0" SECTION

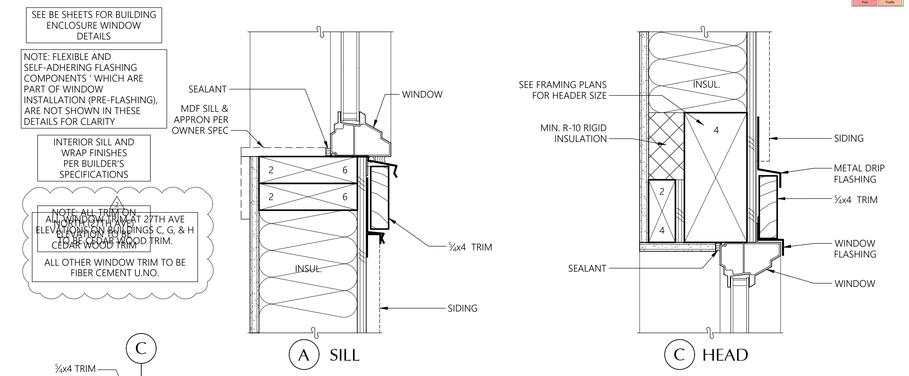

A SILL

C HEAD

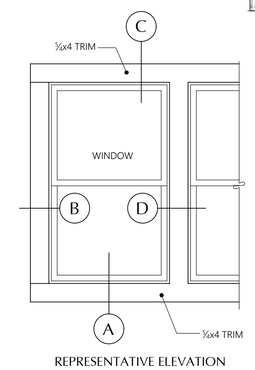

REPRESENTATIVE ELEVATION

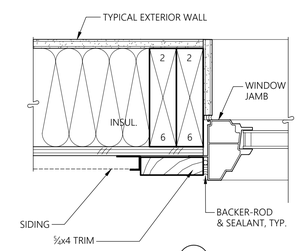

B JAMB

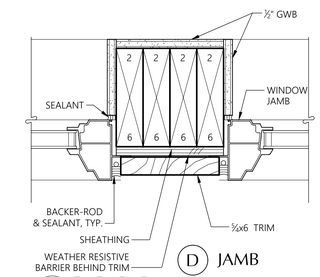

D JAMB

WINDOW DETAILS UPDATED

6 TYPICAL WINDOW DETAILS

3" = 1'-0"

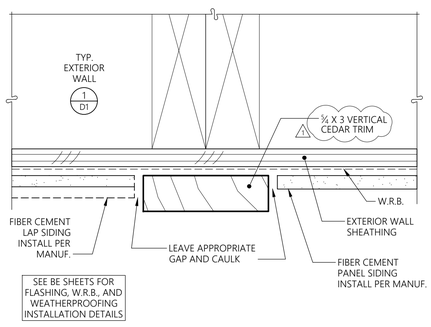

19 VERTICAL SIDING TRANSITION

6"=1'-0" PLAN

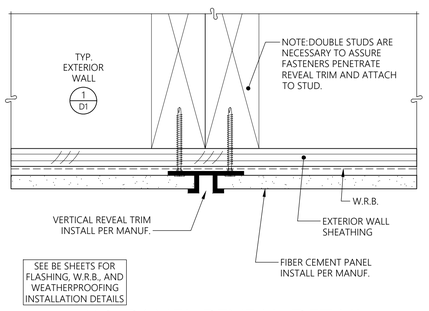

15 TYP. PANEL REVEAL DETAIL: VERTICAL REVEAL TRIM

6"=1'-0" PLAN

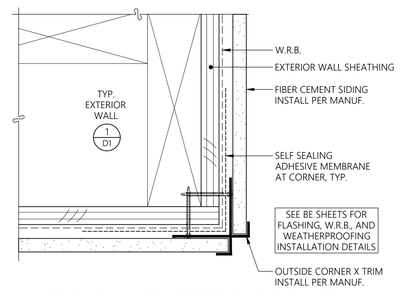

11 TYPICAL OUTSIDE CORNER @ PANEL SIDING

6"=1'-0" PLAN

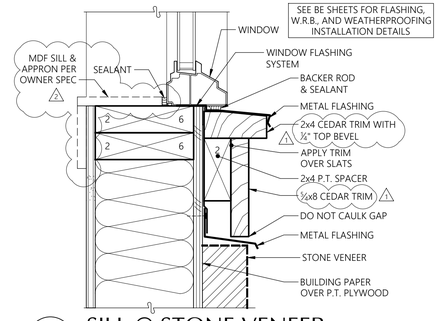

7 SILL @ STONE VENEER

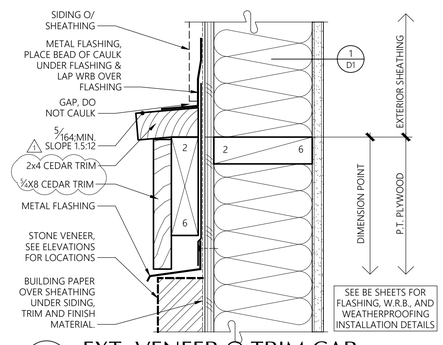

3 EXT. VENEER @ TRIM CAP

3" = 1'-0" SECTION

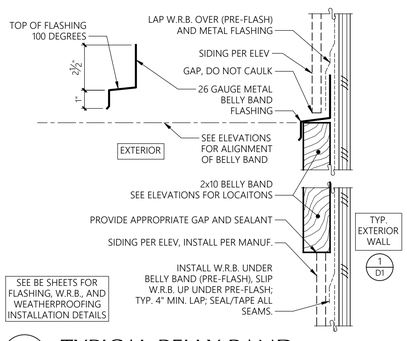

20 TYPICAL BELLY BAND

3" = 1'-0"

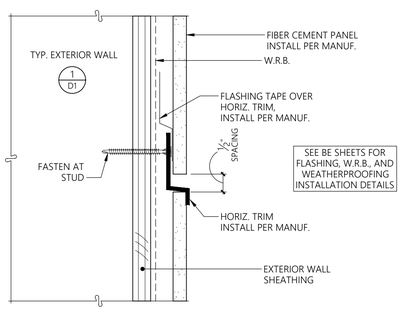

16 TYP. PANEL REVEAL DETAIL: HORIZONTAL REVEAL TRIM

6"=1'-0" SECTION

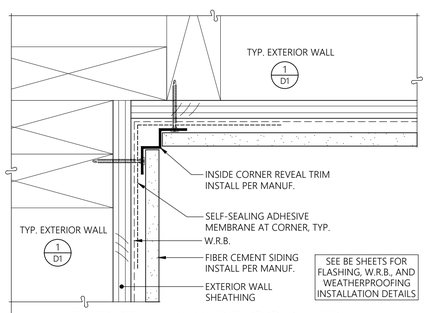

12 TYPICAL INSIDE CORNER @ PANEL SIDING

6"=1'-0" PLAN

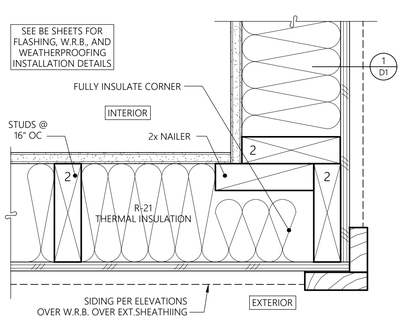

8 TYPICAL EXTERIOR CORNER

3" = 1'-0" PLAN

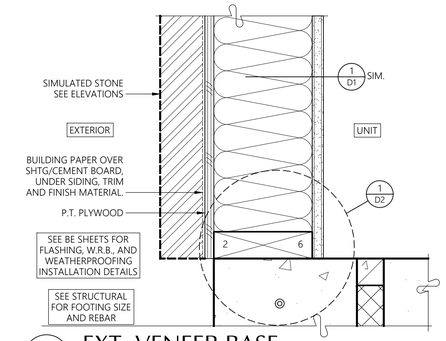

4 EXT. VENEER BASE

3" = 1'-0" SECTION

City of Puyallup
Innovation & Technology Services
ISSUED PERMIT
Building | Planning
Engineering | Public Works
Fire | Parks

MILBRANDT ARCHITECTS

25 Central Way, Suite 210
Kirkland, Washington 98033
P: 425.454.7130 F: 425.658.1208
Web: www.milbrandtarch.com

© Copyright 2023
Milbrandt Architects, INC., P.S.
All rights reserved

11063 REGISTERED ARCHITECT
ANNA P. THOMPSON
STATE OF WASHINGTON

Details

Bradley Heights Apartments

Puyallup, Wa

Timberlane Partners

Revisions

No.	Date	Description
1	8-30-24	Owner Changes/ Permit Corrections

PRMU20240279

Initial Publish Date:

Date Plotted: 5-1-25

Job No.: 23-06

Drawn By: APT/HDM

Sheet No.: D6

FL:\23-06\DETAILS (01-D2)\DWG

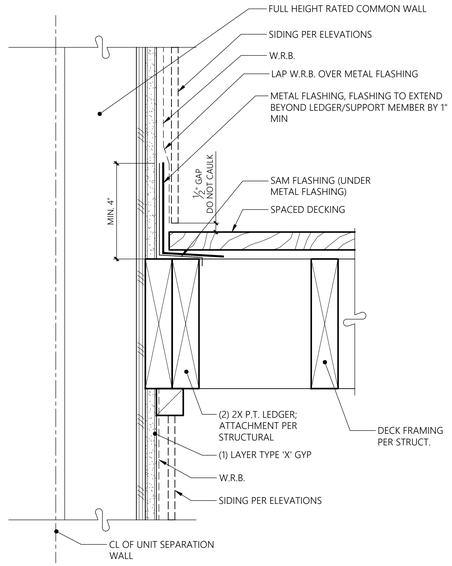

A DECK AT RATED WALL

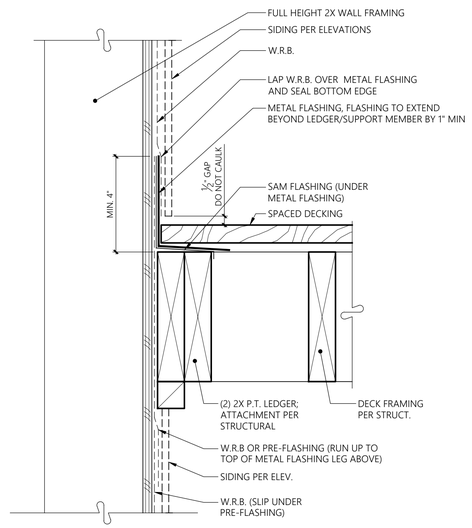

B DECK AT UN-RATED WALL

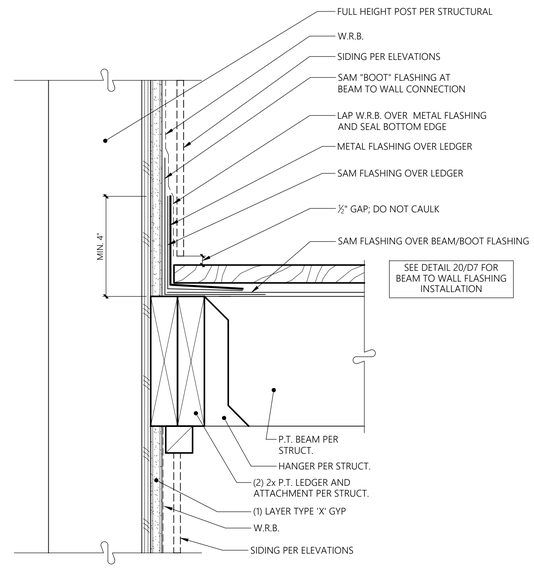

C BEAM AT RATED COLUMN

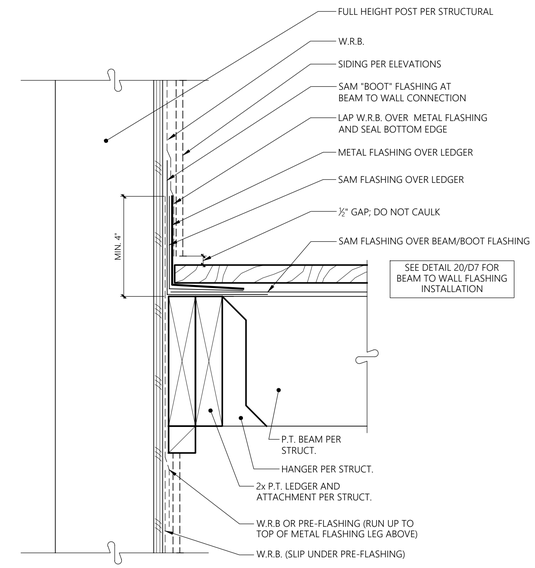

D BEAM AT UN-RATED COLUMN

18 SPACED DECKING TO WALL

3" = 1'-0"

SECTION

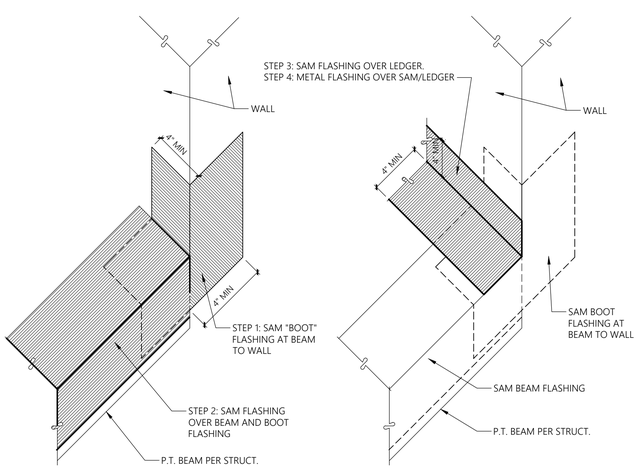

20 BEAM TO WALL FLASHING

NTS

SHEET ADDED WITH SPACED DECKING DETAILS

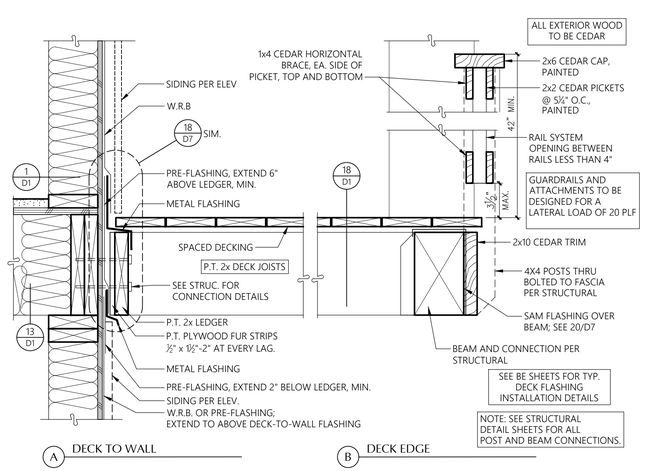

A DECK TO WALL

B DECK EDGE

16 TYP. SPACED DECKING DETAILS

1-1/2" = 1'-0"

SECTION

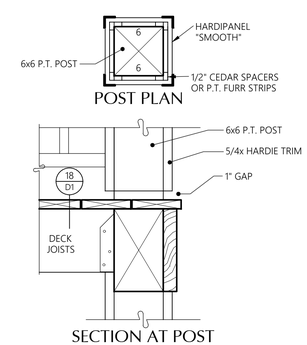

7 POST AT SPACED DECKING

1-1/2" = 1'-0"

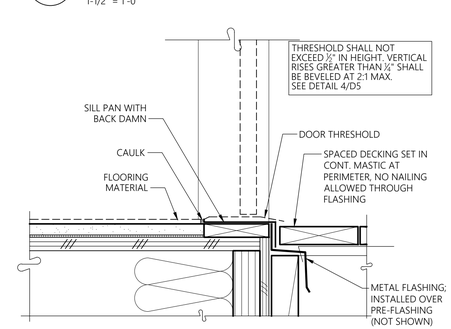

8 SPACED DECKING @ DOOR THRESHOLD

3" = 1'-0"

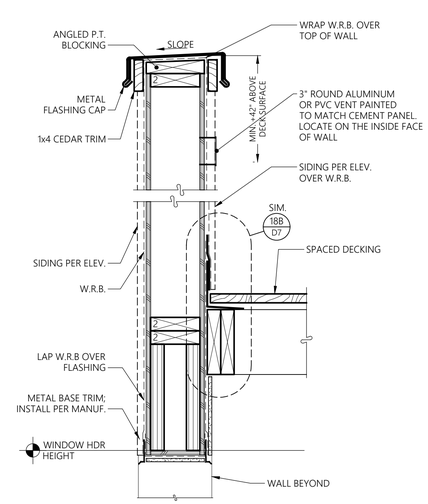

4 WALL @ SPACED DECKING

1-1/2" = 1'-0"

SECTION

City of Puyallup
Innovation & Permitting Services
ISSUED PERMIT
Building | Planning
Engineering | Public Works
Fire | Parks

MILBRANDT ARCHITECTS

25 Central Way, Suite 210
Kirkland, Washington 98033
P: 425.454.7130 F: 425.658.1208
Web: www.milbrandtarch.com

© Copyright 2023
Milbrandt Architects, INC., P.S.
All rights reserved

11063 REGISTERED ARCHITECT
ANNA P. THOMPSON
STATE OF WASHINGTON

Details

Bradley Heights Apartments

Puyallup, Wa

Timberlane Partners

Revisions

No.	Date	Description
1	8-30-24	Owner Changes/ Permit Corrections

PRMU20240279

Initial Publish Date:

Date Plotted: 5-1-25

Job No.: 23-06

Drawn By: APT/HDM

Sheet No.: 1 D7

F:\2306\DETAILS (D1-D2)1.DWG

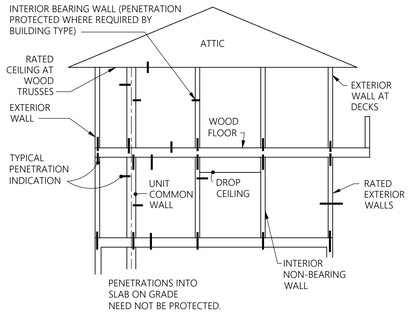

THE PURPOSE OF THIS DETAIL IS TO INDICATE TYPES OF LOCATIONS OF WALL, CEILING AND FLOOR PENETRATIONS THAT NEED TO BE FIRESTOPPED IN ACCORDANCE WITH 706, 708, 711, 713, 714 AND 717 OF THE 2018 INTERNATIONAL BUILDING CODE. THE THICK LINES IN THE DETAIL INDICATE A PENETRATION BY A PIPE, CONDUIT, VENT, ETC., WHETHER PLASTIC (COMBUSTIBLE) OR NON-COMBUSTIBLE.
IN GENERAL THESE PENETRATIONS (OR THE ANNULAR SPACE AROUND THEM) WOULD COMPROMISE THE INTEGRITY OF THE FIRE-RATED ASSEMBLY UNLESS IT WERE CLOSED OFF AND PROTECTED DURING A FIRE. COMMON WALLS BETWEEN UNITS ARE FIRE-RATED WALLS. UNRATED WALLS WITHIN UNITS (EVEN THOUGH THEY MAY HAVE RATED WALLBOARD) NEED NOT BE PROTECTED. HOWEVER, PENETRATION OF THE TOP AND BOTTOM PLATES OF UNRATED WALLS INTO THE RATED FLOOR ASSEMBLY NEEDS TO BE FIRESTOPPED.
THE CONTRACTOR SHALL DETERMINE FIRESTOPPING FOR EACH SITUATION, AND TESTED ASSEMBLIES SHALL BE SUBMITTED TO THE ARCHITECT AND THE CITY IN ACCORDANCE WITH THE "DEFERRED SUBMITTALS" SECTION ON THE COVER SHEET.

17 PENETRATION LOCATIONS FOR FIRESTOPPING

NO SCALE — SECTION

1 DETAIL 18/D8 REMOVED

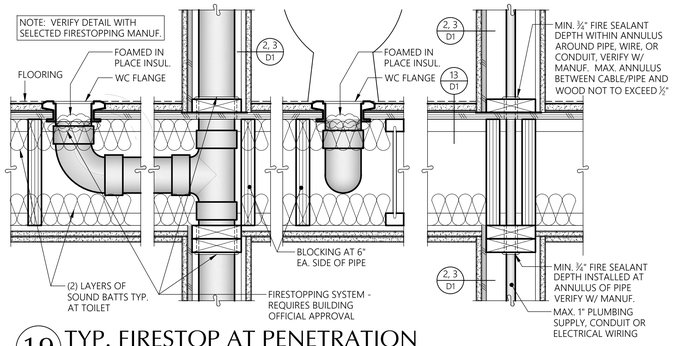

19 TYP. FIRESTOP AT PENETRATION

1-1/2" = 1'-0" — SECTION

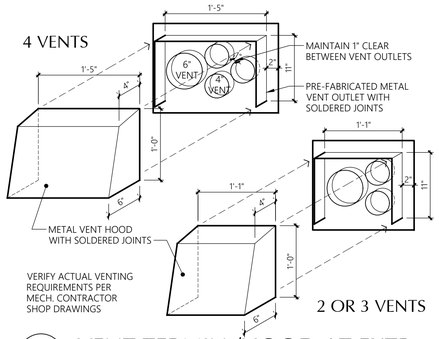

7 VENT TERMIN./HOOD AT EXTR.

1" = 1'-0"

1 REMOVED DETAIL 6/D7

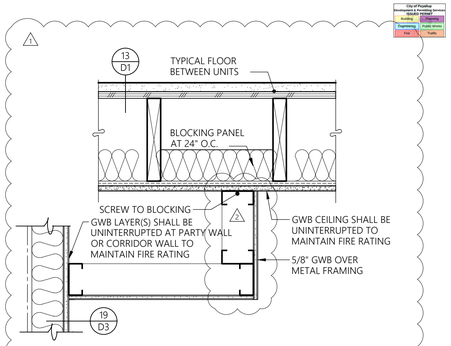

1 FURRED CEILING AT 1-HR WALL

1 1/2" = 1'-0" — SECTION

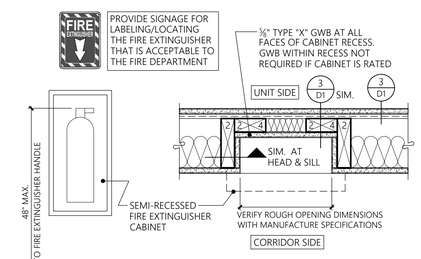

EXTINGUISHER ELEVATION

NOTE: INSTALLATION SHOWN IN 1-HOUR RATED CORRIDOR WALL. INSTALLATION IS SIMILAR IN DIFFERENT FIRE RATED WALL ASSEMBLIES. SEE PLANS FOR CABINET LOCATIONS AND WALL TYPES.

2 SEMI-RECESSED FIRE EXT. CAB.

1-1/2" = 1'-0" — PLAN

INSULATION AND ENERGY NOTES

Insulation - General

All insulation materials shall be installed according to the manufacturer's instructions to achieve proper densities, and maintain uniform R-values. Substantial contact of the insulation with the surface being insulated is required.

Where required, insulation shall be installed with clearances according to manufacturer's specifications. Insulation shall be installed so that required ventilation is unobstructed. For blown or poured loose fill insulation clearances shall be maintained through installation of a permanent retainer.

Slab on Grade

R-10 slab on grade insulation shall be installed inside the foundation wall.

Insulated Floors

Floor insulation shall be installed in a permanent manner in substantial contact with the surface being insulated. Insulation supports shall be installed so spacing is no more than twenty-four inches on center.

Floors separating conditioned space from unconditioned space shall have a vapor barrier installed. Vapor barrier shall be installed on the warm side of the insulation. The vapor barrier shall have a one perm dry cup rating or less (i.e. four mil. polyethylene or kraft faced material). The floor sheathing may be used as the vapor barrier if rated (and so stamped) at one perm (max.) Otherwise place vapor barrier on top of joists before placing sheathing.

Exterior Walls

All wall insulation shall fill the entire cavity. Exterior wall cavities isolated during framing shall be fully insulated to the levels of the surrounding walls. All faced insulation shall be face stapled to avoid compression.

Walls separating conditioned space from unconditioned space shall have a vapor barrier installed. Faced batt insulation shall be face stapled. Vapor barrier shall be installed on the warm side of the insulation.

Air Leakage

These air leakage notes apply to those locations separating outdoor ambient conditions from interior spaces that are heated or mechanically cooled.

Exterior joints around windows and door frames, between wall cavities and window or door frames, openings between walls and foundation, between walls and roof and wall panels; openings at penetrations of utility services through walls, floors and roof; and all other openings in the building envelope shall be sealed, caulked, gasketed, or weatherstripped to limit air leakage in a manner approved by the building official.

Doors

All exterior doors or doors serving as access to an enclosed unheated area shall be weatherstripped to limit leakage around their perimeter when in a closed position.

The thermal transfer characteristics of insulated doors shall be determined per NFRC 100-91.

Windows:

Glazing U-values shall be determined in accordance with NFRC 100-91.

Windows and SGD shall be double glazed vinyl type with the U-values indicated on the unit plans.

Windows shall be furnished with outdoor air inlets as indicated on the Unit Electrical plans. Inlets shall have a controllable and secure opening and be capable of a total opening area of not less than four (4) square inches and tested by a nationally recognized standard or approved agency and located to avoid drafts. Inlets shall be screened or otherwise protected from entry by insects, leaves, or other material.

Roof/Ceilings:

Roof/Ceiling insulation: Open-Blown or poured loose fill insulation may be used in attic spaces where the slope of the ceiling is more than 4 in 12 and there is at least 44 inches of clear distance from the top of the bottom chord of the truss or ceiling joist to the underside of the sheathing. When eave vents are installed, baffling of the vent openings shall be provided so as to deflect the incoming air above the surface of the insulation. Baffles shall be rigid material, resistant to wind driven moisture. When feasible, the baffles shall be installed from the top of the outside of the exterior wall, extending inward, to a point six inches vertically above the height of noncompressed insulation, and twelve inches vertically above loose fill insulation. Baffles shall be in place at the time of framing inspection.

Where the ventilation space above the insulation is less than an average of twelve inches roof ceiling assemblies shall be provided with a vapor barrier having a 0.5 perm cup rating or less. Faced batt insulation where used as a vapor barrier shall be face stapled.

Vapor barriers shall not be required in roof/ceiling assemblies where the ventilation space above the insulation averages twelve inches or greater.

Vapor barriers shall be installed on the warm side of the insulation.

MILBRANDT ARCHITECTS
25 Central Way, Suite 210
Kirkland, Washington 98033
P: 425.454.7130 F: 425.658.1208
Web: www.milbrandtarch.com

© Copyright 2023
Milbrandt Architects, INC., P.S.
All rights reserved

11063 REGISTERED ARCHITECT
ANNA P. THOMPSON
STATE OF WASHINGTON

Details

Bradley Heights Apartments

Puyallup, Wa

Timberlane Partners

Revisions

No.	Date	Description
1	8-30-24	Owner Changes/ Permit Corrections

PRMU20240279

Initial Publish Date:

Date Plotted: 5-6-25

Job No.: 23-06

Drawn By: APT/HDM

Sheet No.: D8

H:\2308\DETAILS (D1-DX).DWG

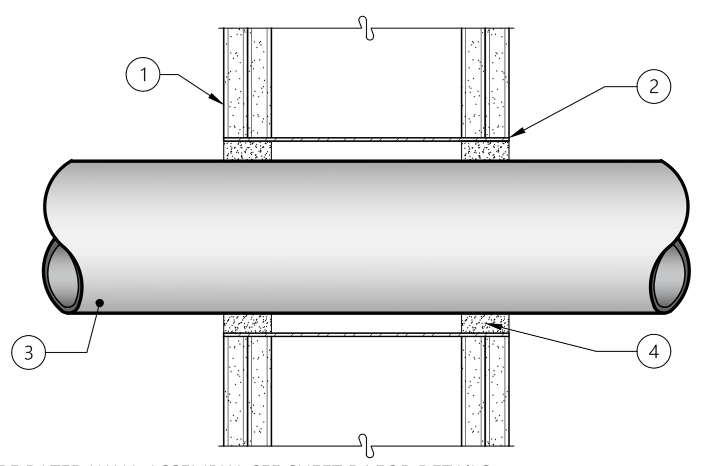

1. TYP. FIRE RATED WALL ASSEMBLY, SEE SHEET D1 FOR DETAILS
2. METALLIC SLEEVE - OPTIONAL - SEE MANUFACTURER INFORMATION FOR ACCEPTABLE METALLIC SLEEVES
3. ONE NONMETALLIC PIPE WITHIN FIRESTOP SYSTEM. PIPE MAY BE INSTALLED AT AN ANGLE NOT GREATER THAN 45 DEGREES FROM PERPENDICULAR. PIPE TO BE RIGIDLY SUPPORTED ON BOTH SIDES OF THE WALL ASSEMBLY. THE SPACE BETWEEN THE PIPE AND PERIPHERY OF THE OPENING SHALL BE MIN. 1/4" TO MAX 11/16". SEE MANUFACTURER INFORMATION FOR ACCEPTABLE PIPE TYPES AND SIZES.
4. FOR 1 HR F RATING, MIN. 5/8" THICKNESS OF FILL MATERIAL APPLIED WITHIN THE ANNULUS, FLUSH WITH BOTH SURFACES OF THE WALL . FOR 2 HOUR F RATING, MIN 1-1/4" THICKNESS OF FILL MATERIAL APPLIED WITHIN ANNULUS, FLUSH WITH BOTH SURFACES OF WALL. HILTI FS-ONE OR FS-ONE MAX INTMESCENT SEALANT

17 WL2128

3" = 1'-0" SECTION

NOTE: ALL DETAILS ON THIS SHEET ARE RECOMMENDED FIRE RATED PENETRATION DETAILS BASED ON PRODUCTS LISTED IN 12/D9. OTHER PRODUCTS MEETING THE SAME LEVEL OF ASSEMBLY SHALL BE DEEMED ACCEPTABLE.

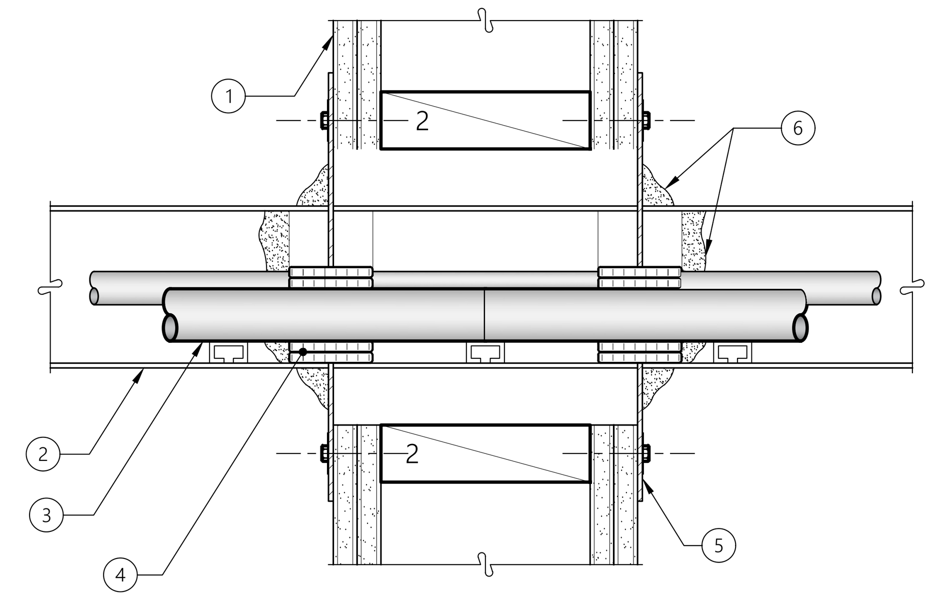

1. TYP. FIRE RATED WALL ASSEMBLY, SEE SHEET D1 FOR DETAILS
2. MAX 24" WIDE BY MAX 4" DEEP OPEN LADDER STEEL OR ALUMINUM CABLE TRAY. CABLE TRAY TO CONSIST OF CHANNEL-SHAPED SIDE-RAILS WITH BOXED CHANNEL RUNGS SPACED 9" O.C. CABLE TRAY CENTERED IN FRAMED OPENING AND RIGIDLY SUPPORTED ON BOTH SIDES OF WALL ASSEMBLY.
3. AGGREGATE CROSS-SECTIONAL AREA OF CABLES IN CABLE TRAY NOT TO EXCEED 32% OF THE CROSS-SECTIONAL AREA OF THE CABLE TRAY BASED ON A MAX 3" CABLE LOADING DEPTH WITHIN THE CABLE TRAY. ACCEPTABLE TYPES AND SIZES OF CABLE AS NOTED BY MANUF.
4. RIGID ALUMINUM FOIL-FACED SHEET WITH GALV. STEEL SHEET BACKER. SHEETS CUT TO TIGHTLY FOLLOW THE CONTOURS OF THE CABLES AROUND THE ENTIRE PERIMETER OF THE CABLE TRAY AND CABLE FILL. SHEETS CUT TO LAP A MIN. OF 2" ON THE WALL ON ALL SIDES OF THE OPENING ON BOTH SIDES OF THE WALL.
5. MIN. 2" WIDE STRIP OF MIN 0.020" THICK (26 GAUGE) GALV. STEEL CENTERED OVER ENTIRE LENGTH OF EACH BUTTED SEAM OR SLIT MADE IN THE INTUMESCENT SHEET. INSTALL PER MANUF.
6. ONE LAYER OF 1/2" x 1/16" ADHESIVE BACKED GRAPHITE INTUMESCENT SEAL POSITIONED UNDER INTUMESCENT SHEET AROUND ENTIRE PERIMETER OF THROUGH OPENING OR MIN. 1/4" DIAM. CONTINUOUS BEAD OF CAULK OR PUTTY APPLIED TO EDGE OF INTUMESCENT SHEET AT ITS INTERFACE WITH SURFACE OF FLOOR OR WALL AROUND ENTIRE PERIMETER OF THROUGH OPENING. CAULK APPLIED TO FILL ALL INTERSTICES BETWEEN CABLES AND BETWEEN CABLES AND WRAP STRIP (ITEM 4). CAULK DEPTH TO BE MIN. 2" WITHIN CONFINES OF WRAP STRIP ON BOTH SIDES OF FLOOR OR WALL ASSEMBLY. GENEROUS APPLICATION OF CAULK TO BE APPLIED AROUND THE BASE OF THE CABLE TRAY SIDE-RAILS AND CONTOUR APPLIED WRAP STRIPS AT THEIR EGRESS FROM THE INTUMESCENT SHEET ON BOTH SIDES OF THE WALL ASSEMBLY. CAULK ALSO APPLIED TO COVER ALL EXPOSED EDGES OF WRAP STRIPS TO A MIN. THICKNESS OF 1/8"

SEE MANUF. INFORMATION FOR USE OF PUTTY AS CAULKING ALTERNATIVE.

10 WL4004 △1

3" = 1'-0" SECTION

NOTE:
THESE FIRESTOPPING DETAILS ARE REPRESENTATIVE OF TYPICAL SITUATIONS ONLY. FOR OTHER CONDITIONS REFER TO 3M MATRIX OF UL TESTED SYSTEMS BELOW. IF CONDITION IS NOT COVERED IN THIS MATRIX, CONTACT MANUFACTURER FOR TESTED ASSEMBLY RECOMMENDATION. ALL FIRESTOP DETAILS TO BE EXECUTED BY LICENSED AND/OR CERTIFIED INSTALLER.
FIRESTOPPING PENETRATIONS AND VOIDS IN RATED CONSTRUCTION:
MATRIX OF UL TESTED SYSTEMS:

PENETRATING ITEM	FIRE ASSEMBLY	RATING	SYSTEM	PROD	ASSOCIATED DETAIL
METAL PIPE/CONDUIT	GYP. WALLS	1,2&3 HR	WL1001	CP25WB+	1/D9 △2
MULTIPLE METAL	GYP. WALLS	1&2 HR	WL1016	CP25WB+	2/D9 △2
INSULATED PIPE	GYP. WALLS	1&2 HR	WL5039	CP25WB+	4/D9 △2
HVAC DUCTS	GYP. WALLS	1&2 HR	WL7008	CP25WB+	6/D9 △2
BUND CABLES	GYP. WALLS	1&2 HR	WL3031	MOLDABLE PUTTY	7/D9 △2
ELEC. OUTLET BOXES	GYP. WALLS	1&2 HR	ANSI UL263	MOLDABLE PUTTY	8/D9 △2
CABLE TRAYS	GYP. WALLS	1&2 HR	WL4004	CP25WB+ CS195+	10/D9 △2

12 MATRIX OF UL TESTED SYSTEMS FOR FIRESTOPPING

NTS

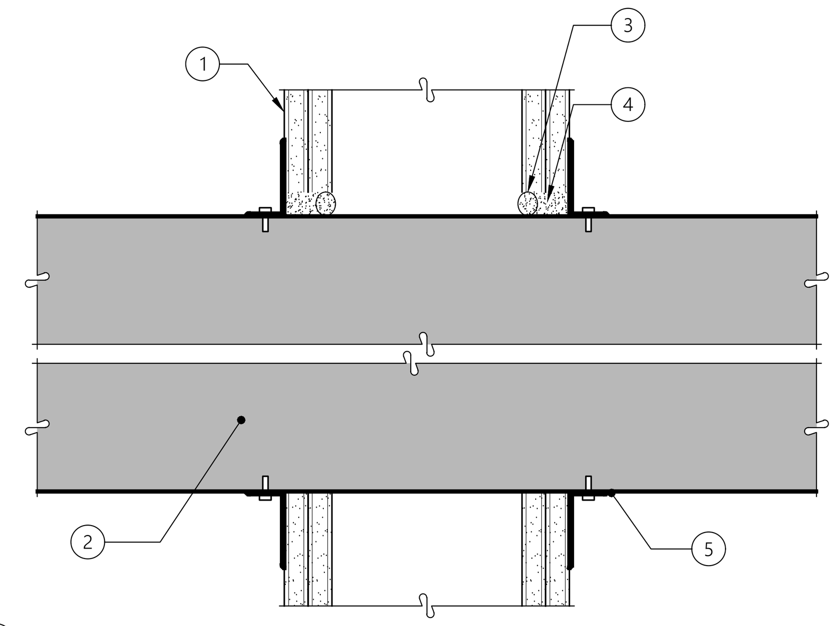

1. TYP. FIRE RATED WALL ASSEMBLY, SEE SHEET D1 FOR DETAILS
2. NOM. 36" x 30" (OR SMALLER) NO. 24 GAUGE (OR HEAVIER) GALV. STEEL DUCT TO BE INSTALLED EITHER CONCENTRICALLY OR ECCENTRICALLY WITHIN THE FIRESTOP SYSTEM. AN ANNULAR SPACE OF MIN 0" TO MAX 2" IS REQUIRED WITHIN THE FIRESTOP SYSTEM.
3. PACKING MATERIAL (OPTIONAL) – POLYETHYLENE BACKER ROD, MINERAL WOOL BATT INSULATION OR FIBERGLASS BATT INSULATION FRICTION-FIT INTO ANNULAR SPACE FOR 2 HR RATED WALL ASSEMBLIES ONLY. PACKING MATERIAL TO BE RECESSED FROM BOTH SURFACES OF WALL TO ACCOMMODATE THE REQUIRED THICKNESS OF FILL MATERIAL (ITEM 3B).
4. MIN. 5/8" THICKNESS OF FILL MATERIAL APPLIED WITHIN ANNULUS, FLUSH WITH BOTH SURFACES OF WALL ASSEMBLY. AT THE POINT CONTACT LOCATION BETWEEN DUCT AND WALLBOARD, A MIN 1/4" DIAM. BEAD OF SEALANT SHALL BE APPLIED AT THE WALLBOARD/DUCT INTERFACE ON BOTH SURFACES OF WALL ASSEMBLY.
5. MIN. 16 GAUGE GALV. STEEL ANGLES SIZED TO LAP DUCT A MIN OF 2" AND LAP WALL SURFACES OF A MIN OF 1". ANGLES ATTACHED TO DUCT ON BOTH SIDES OF WALL WITH MIN 1/2" LONG, NO. 10 (OR LARGER) SHEET METAL SCREWS SPACED A MAX OF 1" FROM EACH END OF DUCT AND SPACED A MAX OF 6" OC.

6 WL7008

3" = 1'-0" SECTION

△1

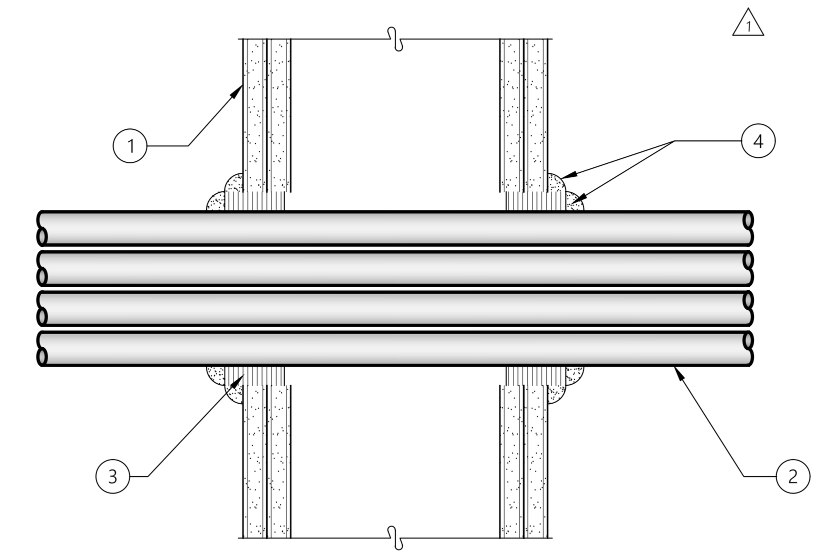

1. TYP. FIRE RATED WALL ASSEMBLY, SEE SHEET D1 FOR DETAILS
2. CABLES - MAX 4 IN. DIAM TIGHT BUNDLE OF CABLES CENTERED IN CIRCULAR CUTOUTS IN GWB AND RIGIDLY SUPPORTED ON BOTH SIDES OF THE WALL ASSEMBLY. SEE MANUFACTURER INFORMATION FOR ACCEPTABLE TYPES AND SIZES CABLES.
3. WRAP STRIP - NOM 1/4" THICK INTUMESCENT MATERIAL FACED ON ONE SIDE WITH ALUMINUM FOIL, SUPPLIED IN NOM 2 IN. WIDE STRIP TIGHTLY WRAPPED AROUND CABLE BUNDLE (FOIL SIDE OUT) WITH SEEM BUTTED. WRAP STRIP SECURELY BOUND WITH STEEL WIRE TIE AND SLID INTO ANGULAR SPACE APPROX. 1-1/4" SUCH THAT APPROX 3/4" OF THE WRAP WIDTH PROTRUDES FROM WALL SURFACE ON EACH SIDE OF ASSEMBLY
4. MIN. 1/4" THICKNESS DIAM OF MOLDABLE PUTTY APPLIED TO THE WRAP STIP/WALL INTERFACE AND TO THE EXPOSED EDGE OF WRAP STRIP APPROX 3/4" FROM WALL SURFACE ON EITHER SIDE OF ASSEMBLY. PUTTY TO BE FORCED INTO INTERSTICES OF CABLE BUNDLE TO MAX EXTENT POSSIBLE WITHIN CONFINES OF THE WRAP STRIP EACH SIDE OF ASSEMBLY

7 WL3030

3" = 1'-0" SECTION

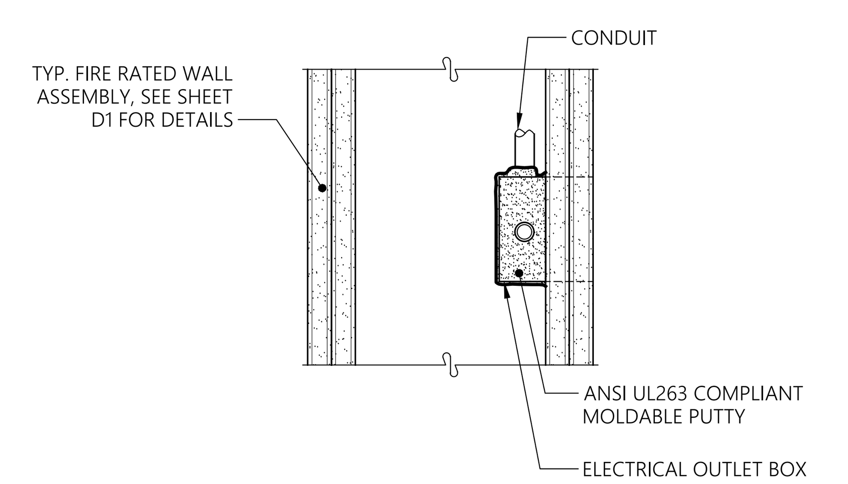

8 ANSI / UL 263

3" = 1'-0" SECTION

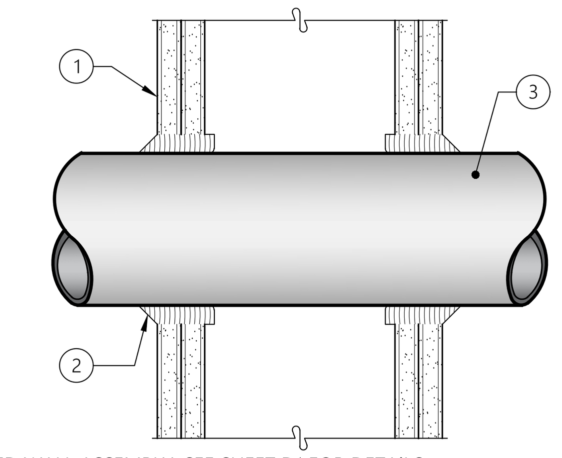

1. TYP. FIRE RATED WALL ASSEMBLY, SEE SHEET D1 FOR DETAILS
2. MIN. 5/8", 1 1/4", 1 7/8" THICKNESS OF CAULK FOR 1, 2, 3 HOUR, RESPECTIVELY, APPLIED WITHIN ANNULUS, FLUSH WITH BOTH SURFACES OF WALL. MIN 1/4" DIA. BEAD OF CAULK APPLIED TO GYPSUM BOARD/PENETRANT INTERFACE AT POINT CONTACT LOCATION ON BOTH SIDES OF WALL.
3. METALLIC PIPE, CONDUIT OR TUBING INSTALLED EITHER CONCENTRICALLY OR ECCENTRICALLY WITHIN THE FIRESTOP SYSTEM. ANNULAR SPACE BETWEEN PIPE, CONDUIT OR TUBING AND PERIPHERY OF OPENING SHALL BE MIN OF 0 IN. (POINT CONTACT) TO MAX 2 IN.

1 WL1001

3" = 1'-0" SECTION

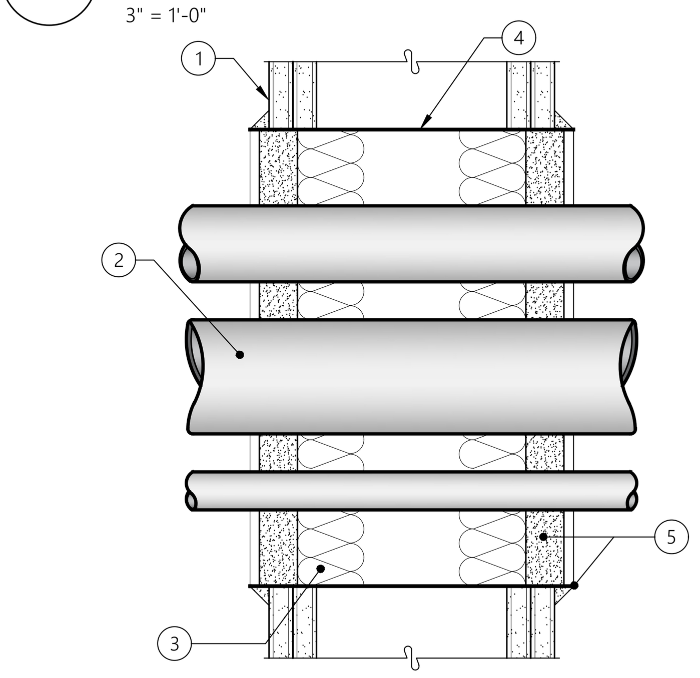

1. TYP. FIRE RATED WALL ASSEMBLY, SEE SHEET D1 FOR DETAILS
2. NOM 3 IN. DIAM (OR SMALLER) SCHEDULE 10 (OR HEAVIER) STEEL PIPE, STEEL CONDUIT OR STEEL ELECTRICAL METALLIC TUBING. MULTIPLE PIPES AND/OR CONDUIT PERMITTED IN SLEEVED OPENING PROVIDED A MIN SEPARATION OF 1/4" IS MAINTAINED BETWEEN PIPES OR CONDUITS.
3. MIN. 1" THICKNESS OF RIGID GLASS FIBER INSULATION OR MINERAL WOOL BATT INSULATION FIRMLY PACKED INTO STEEL SLEEVE ON BOTH SIDES OF WALL ASSEMBLY AS A PERMANENT FORM. PACKING MATERIAL TO BE RECESSED MIN. 5/8" FROM SURFACE OF WALL ON BOTH SIDES OF WALL ASSEMBLY.
4. NO. 28 GAUGE GALV. SHEET STEEL FORMED INTO MAX 12 IN. DIA. OR MAX 12 IN. BY 9 IN. SLEEVE WITH NOM 2 IN. OVERLAP AT SEAM. LENGTH OF SLEEVE TO BE APPROX. 1 IN. GREATER THAN OVERALL THICKNESS OF WALL ASSEMBLY, SUCH THAT, WHEN INSTALLED, THE ENDS OF THE SLEEVE WILL PROJECT APPROX. 1/2 IN. BEYOND THE SURFACE OF THE WALL ON BOTH SIDES OF THE WALL ASSEMBLY.
5. CAULK OR SEALANT APPLIED TO FILL THE STEEL SLEEVE TO A MIN. DEPTH OF 1" ON BOTH SIDES OF WALL ASSEMBLY. A NOM. 1/4" DIA. CONTINUOUS BEAD OF CAULK SHALL BE APPLIED AROUND THE CIRCUMFERENCE OF THE STEEL SLEEVE AT ITS EGRESS FROM THE GYPSUM WALLBOARD LAYERS ON BOTH SIDES OF THE WALL ASSEMBLY.

2 WL1016

3" = 1'-0" SECTION

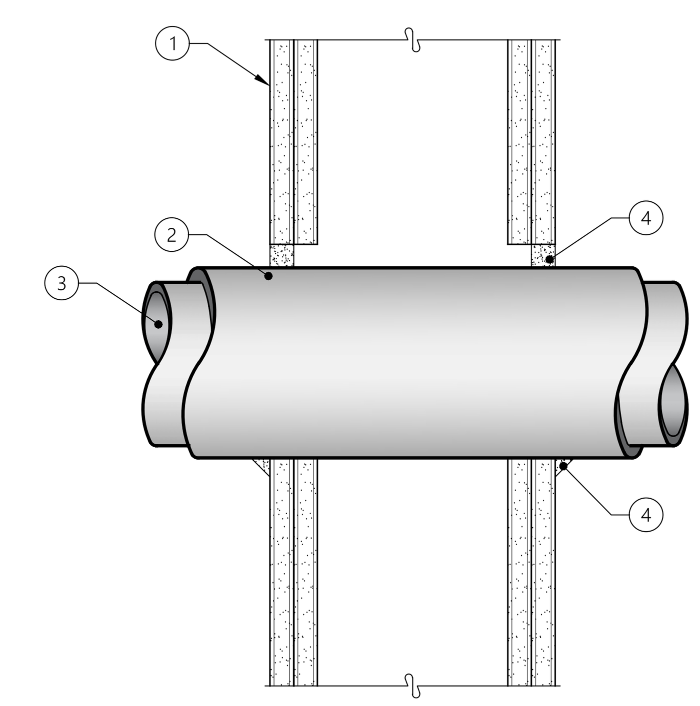

1. TYP. FIRE RATED WALL ASSEMBLY, SEE SHEET D1 FOR DETAILS
2. NOM. 1/2" TO 2" THICK HOLLOW CYLINDRICAL HEAVY DENSITY (MIN 3.5 PCF) GLASS FIBER UNITS FOR 1 HR RATED ASSEMBLIES, NOM 1/2" TO 1 1/2" THICK CYLINDRICAL HEAVY DENSITY GLASS FIBER UNITS FOR 2 HR RATED ASSEMBLIES, JACKETED ON THE OUTSIDE WITH AN ALL SERVICE JACKET. THE ANNULAR SPACE BETWEEN THE INSULATED PIPE AND THE EDGE OF THE THROUGH OPENING SHALL BE MIN 0" TO MAX. 1 1/4"
3. ONE METALLIC PIPE OR TUBE TO BE INSTALLED EITHER CONCENTRICALLY OR ECCENTRICALLY WITHIN THE FIRESTOP SYSTEM. PIPE TO BE RIGIDLY SUPPORTED ON BOTH SIDES OF WALL ASSEMBLY.
4. MIN. 5/8" THICKNESS OF CAULK APPLIED WITHIN ANNULAR SPACE FLUSH WITH EACH SURFACE OF WALL. A MIN. 1/2" DIAM. BEAD OF CAULK SHALL BE APPLIED TO THE PIPE INSULATION/ WALLBOARD INTERFACE AT THE POINT CONTACT LOCATION ON BOTH SIDES OF WALL.

4 WL5039

3" = 1'-0" SECTION

MILBRANDT ARCHITECTS

25 Central Way, Suite 210
Kirkland, Washington 98033
P: 425.454.7130 F: 425.658.1208
Web: www.milbrandtarch.com

© Copyright 2023
Milbrandt Architects, INC., P.S.
All rights reserved

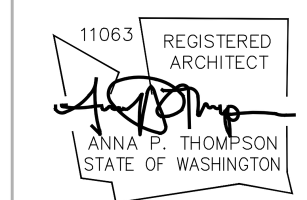

Details

Bradley Heights Apartments

Puyallup, Wa

Timberlane Partners

Revisions

No.	Date	Description
△1	8-30-24	Owner Changes/ Permit Corrections

PRMU20240279

Initial Publish Date:

Date Plotted: 5-1-25

Job No.: 23-06

Drawn By: APT/HDM

Sheet No.: △1 **D9**

H:\2306\DETAILS (D1-DX).DWG

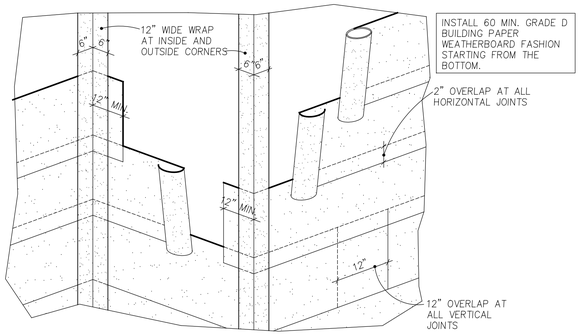

17 BUILDING PAPER INSTALLATION
NO SCALE

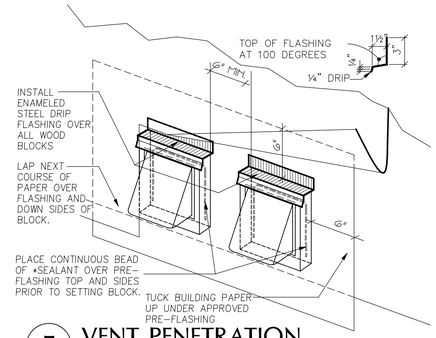

5 VENT PENETRATION
NO SCALE

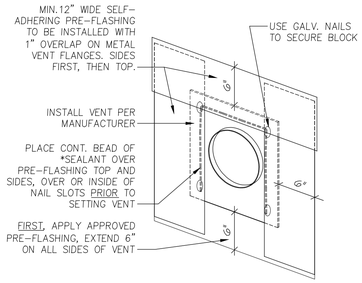

STEP 1

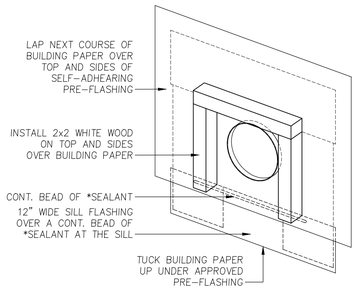

STEP 2

18 AIR VENT (8" OR LARGER)
NO SCALE

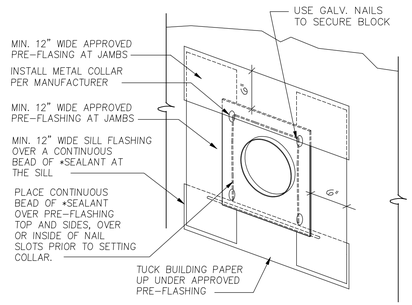

10 DIRECT VENT F.P.
NO SCALE

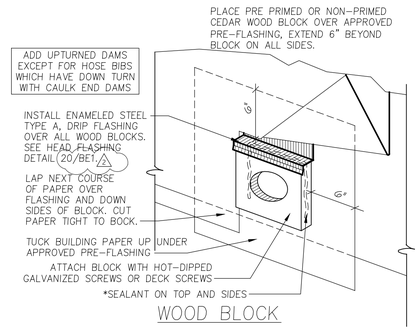

6 PENETRATION DETAIL
NO SCALE

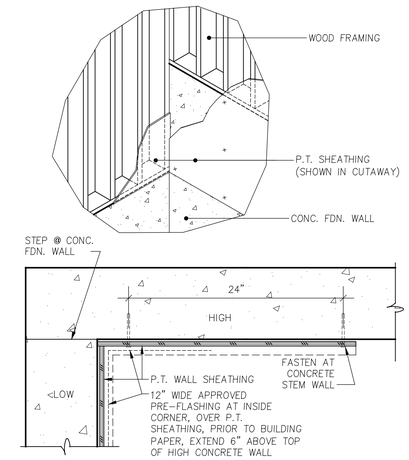

2 CORNER AT FDN. STEP
NO SCALE

NOTE FOR ALL STYLES:
UP-TURNED END DAMS TO BE USED AT EVERY TERMINATION POINT AT ALL LOCATIONS

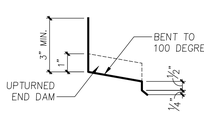

AREAS OF USE:
- Bellybands
- Windows
- All exterior doors
- Garage wraps
- Non-vinyl penetration blocks

FLASHING TYPE A

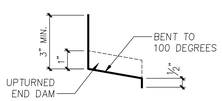

AREAS OF USE:
- Column base shoe
- Anywhere ½" kick-out would not be acceptable or at locations where kick-out could be dangerous for homeowners.

FLASHING TYPE B

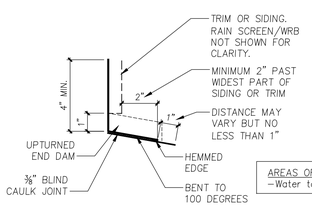

AREAS OF USE:
- Water tables

FLASHING TYPE C

20 HEAD FLASHING TYPES
3" = 1'-0" SECTION

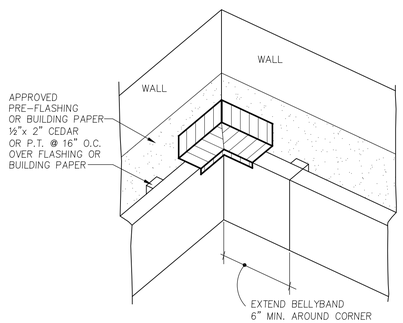

STEP 1

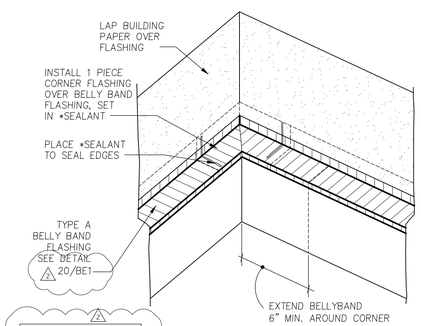

SEE DETAIL 8/BE1 FOR ADDITIONAL BELLYBAND INFORMATION.

STEP 2

16 BELLYBAND FLASHING
NO SCALE

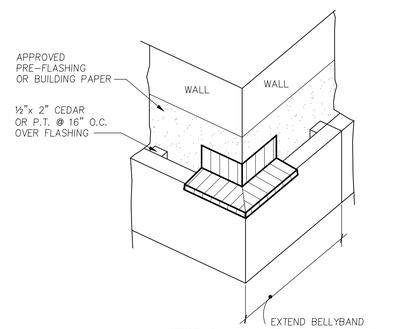

STEP 1

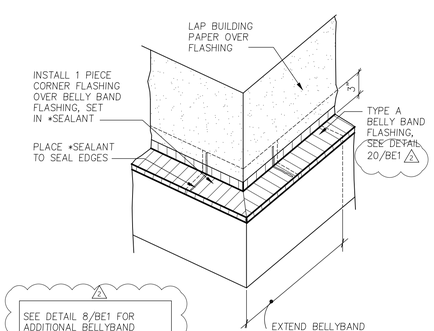

SEE DETAIL 8/BE1 FOR ADDITIONAL BELLYBAND INFORMATION.

STEP 2

12 BELLYBAND FLASHING
NO SCALE

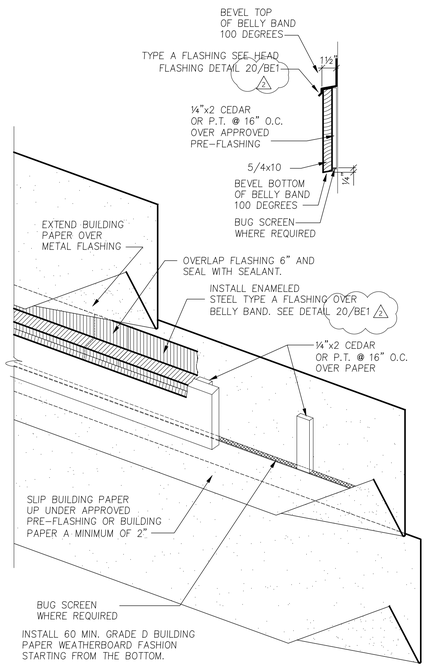

8 BELLY BAND
NO SCALE

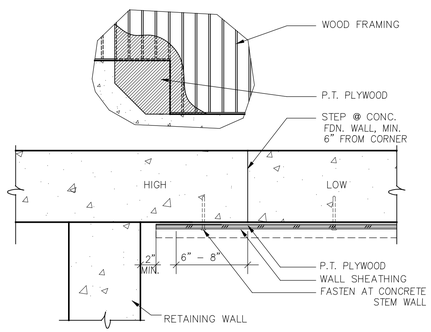

3 SIDING AT FDN. STEP
NO SCALE

BE-Sheet Disclaimer

The details in the BE-Sheets are intended to meet or exceed all manufacturer recommended installation instructions, any letters of approval provided by a manufacturer to the Contractor, local codes, standards set by specific associations, best practices set by the industry or any other group or organization as acknowledged by the industry.

All manufacturer recommendations should be followed when installing specific materials.

If a Subcontractor or installer finds a situation where the BE-Sheet details conflict or fall below any standards set forth by the organizations mentioned above, it will be the responsibility of the Subcontractor to seek appropriate and written clarification from the Contractor before proceeding. The Contractor reserves its right to add, change, modify or update any of the details at any time.

**All components, sealants, fasteners, or materials shall be approved for specific use or application described by the designs, and shall be compatible with all material with which each component comes in contact with.*

City of Puyallup
Permitted & Inspection Services
Stamp review
Building | Planning
Engineering | Public Works
Fire | Parks

MILBRANDT ARCHITECTS
25 Central Way, Suite 210
Kirkland, Washington 98033
P: 425.454.7130 F: 425.658.1208
Web: www.milbrandtarch.com

© Copyright 2023
Milbrandt Architects, INC., P.S.
All rights reserved

11063 REGISTERED ARCHITECT
ANNA P. THOMPSON
STATE OF WASHINGTON

Building Envelope Details

Bradley Heights Apartments
Puyallup, Wa

Timberlane Partners

Revisions

No.	Date	Description

PRMU20240279

Initial Publish Date:
Date Plotted: 5-1-25
Job No.: 23-06
Drawn By: REW/DJV
Sheet No.: BE1

H:\23306\BE-SHEETS\BE1-BE5.DWG

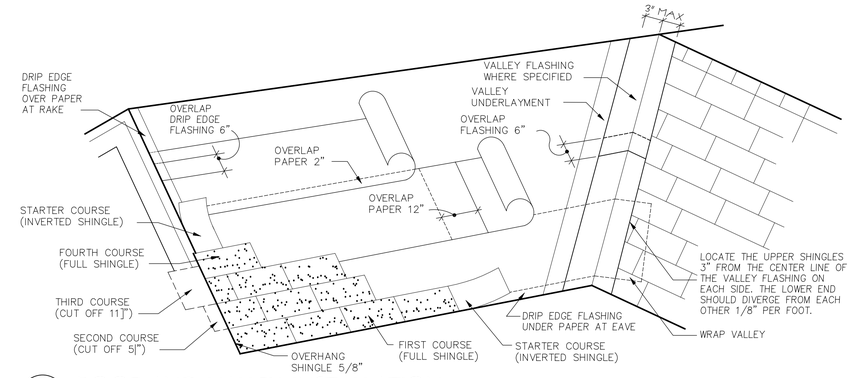

17 ROOF AND VALLEY INSTALLATION
NO SCALE

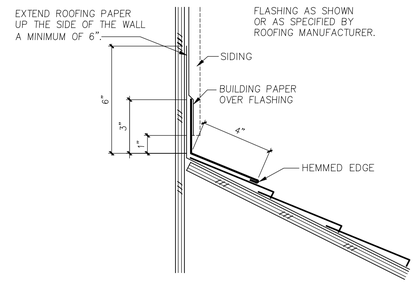

9 ROOF TO WALL
3"= 1'-0"

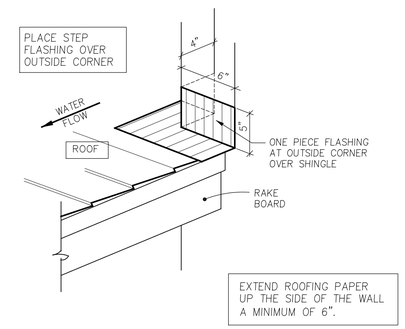

5 ROOF / OUTSIDE CORNER
1-1/2"=1'-0"

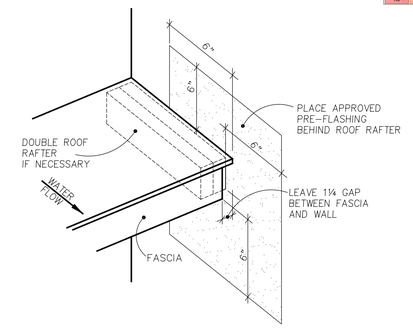

1 ROOF TO WALL
NO SCALE

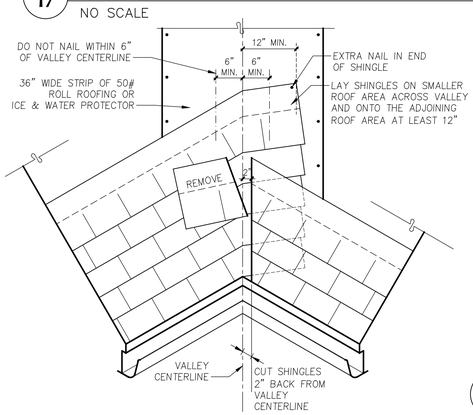

18 NON METAL VALLEY INSTALLATION
NO SCALE

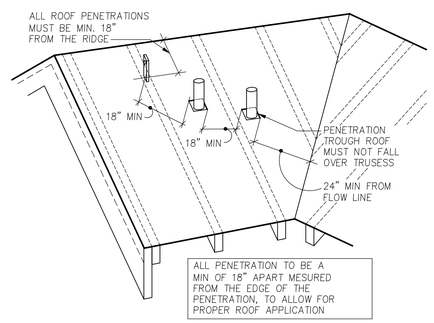

14 ROOF PENETRATION
NO SCALE

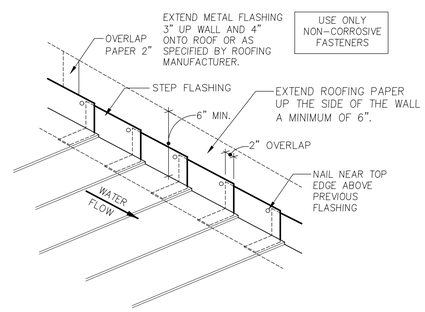

10 STEP FLASHING
NO SCALE

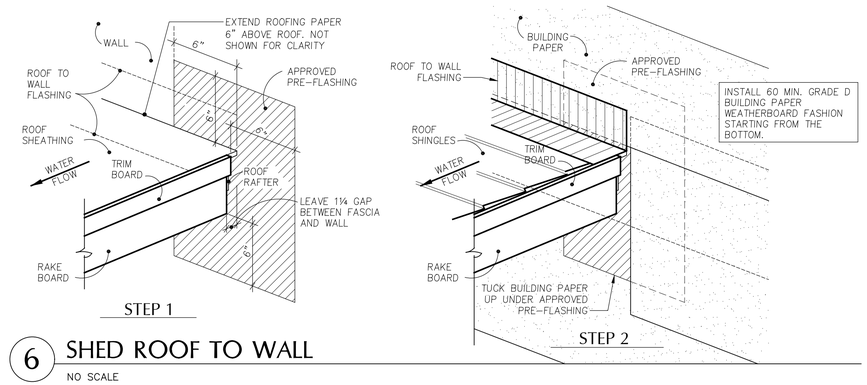

6 SHED ROOF TO WALL
NO SCALE

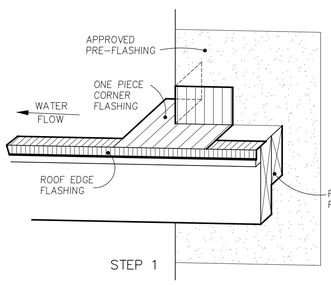

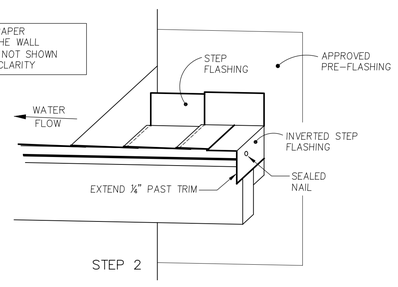

19 ROOF / CORNER OVERLAP
1-1/2" = 1'-0"

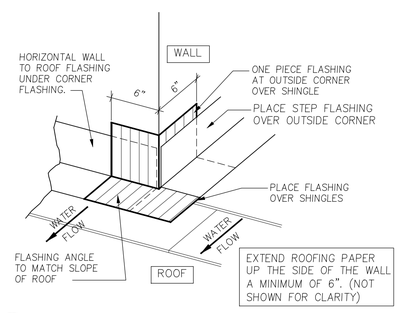

11 OUTSIDE CORNER
NO SCALE

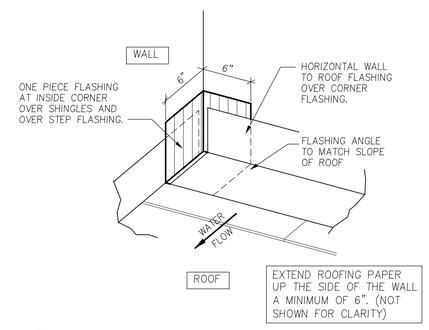

7 INSIDE CORNER AT ROOF
NO SCALE

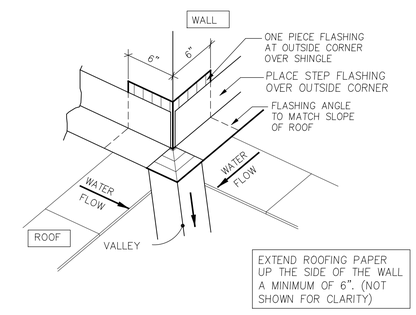

3 OUTSIDE CORNER AT VALLEY
NO SCALE

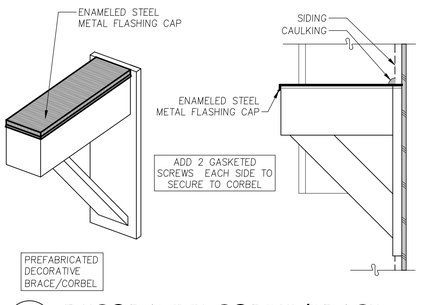

20 DECORATIVE CORBEL/BRACE
NO SCALE

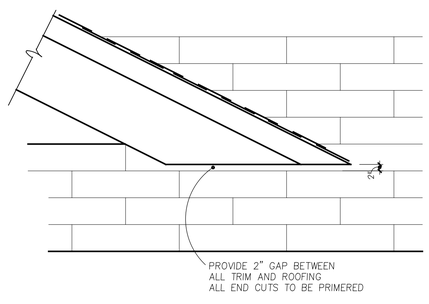

16 ROOF SEPARATION
NO SCALE

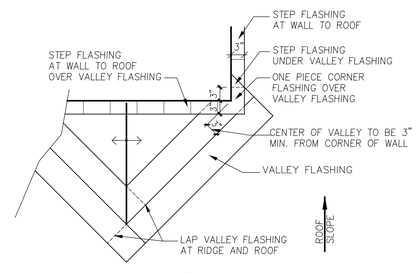

PLAN VIEW

12 CRICKET DETAIL
3/4"=1'-0"

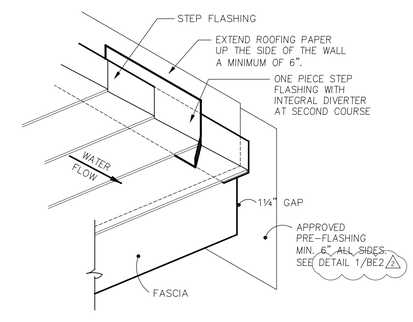

8 ROOF DIVERTER
NO SCALE

BE-Sheet Disclaimer

The details in the BE-Sheets are intended to meet or exceed all manufacturer recommended installation instructions, any letters of approval provided by a manufacturer to the Contractor, local codes, standards set by specific associations, best practices set by the industry or any other group or organization as acknowledged by the industry.

All manufacturer recommendations should be followed when installing specific materials.

If a Subcontractor or installer finds a situation where the BE-Sheet details conflict or fall below any standards set forth by the organizations mentioned above, it will be the responsibility of the Subcontractor to seek appropriate and written clarification from the Contractor before proceeding. The Contractor reserves its right to add, change, modify or update any of the details at any time.

**All components, sealants, fasteners, or materials shall be approved for specific use or application described by the designs, and shall be compatible with all material with which each component comes in contact with.*

City of Puyallup
Innovation & Permitting Services
REVIEW STAMP
Building | Planning
Engineering | Public Works
Fire | Parks

MILBRANDT ARCHITECTS

25 Central Way, Suite 210
Kirkland, Washington 98033
P: 425.454.7130 F: 425.658.1208
Web: www.milbrandtarch.com

© Copyright 2023
Milbrandt Architects, INC., P.S.
All rights reserved

11063 REGISTERED ARCHITECT
ANNA P. THOMPSON
STATE OF WASHINGTON

Building Envelope Details

Bradley Heights Apartments

Puyallup, Wa

Timberlane Partners

Revisions

No.	Date	Description

PRMU20240279

Initial Publish Date:
Date Plotted: 5-1-25
Job No.: 23-06
Drawn By: REW/DJV
Sheet No.: **BE2**

P:\23306 QBE-SHEETS\QBE1-BE5).DWG

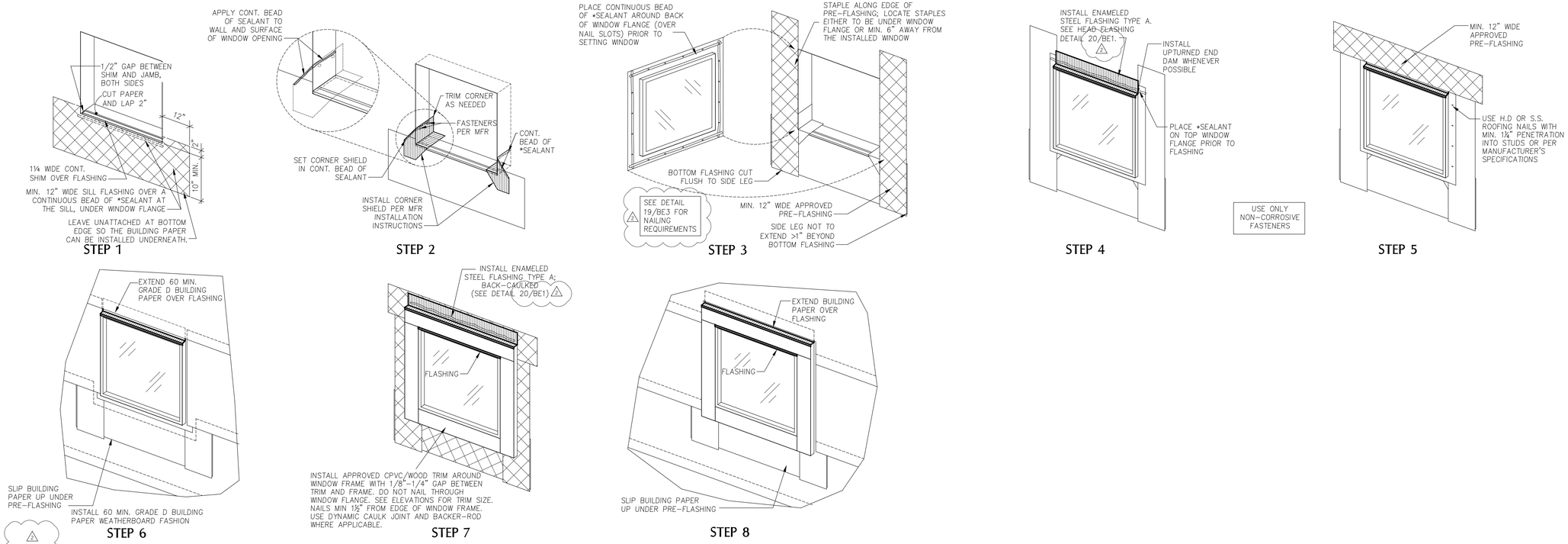

18 WINDOW INSTALLATION WITH WOOD TRIM

NO SCALE

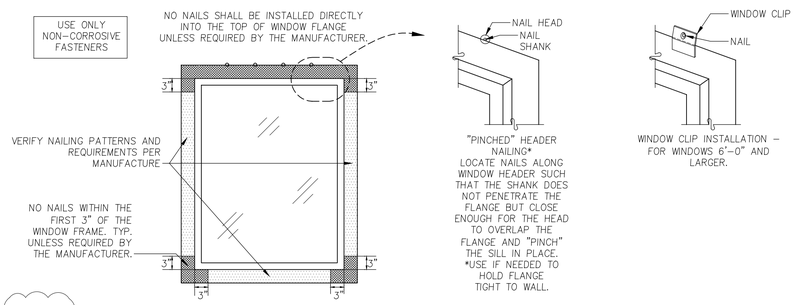

19 TYPICAL WINDOW FLANGE NAILING

NO SCALE

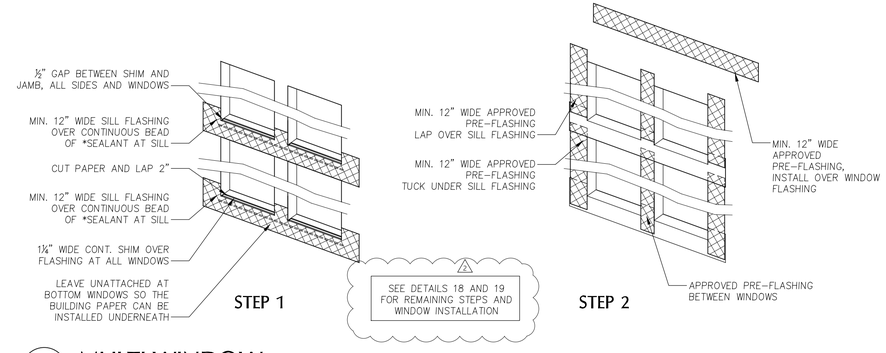

12 MULTI-WINDOW

NO SCALE

DETAIL REMOVED

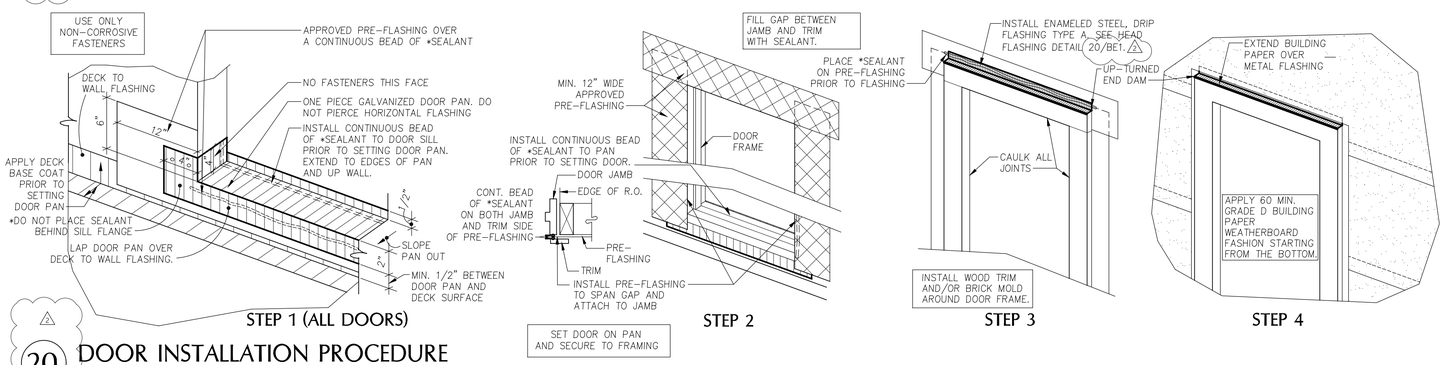

20 DOOR INSTALLATION PROCEDURE

NO SCALE

BE-Sheet Disclaimer

The details in the BE-Sheets are intended to meet or exceed all manufacturer recommended installation instructions, any letters of approval provided by a manufacturer to the Contractor, local codes, standards set by specific associations, best practices set by the industry or any other group or organization as acknowledged by the industry.

All manufacturer recommendations should be followed when installing specific materials.

If a Subcontractor or installer finds a situation where the BE-Sheet details conflict or fall below any standards set forth by the organizations mentioned above, it will be the responsibility of the Subcontractor to seek appropriate and written clarification from the Contractor before proceeding. The Contractor reserves its right to add, change, modify or update any of the details at any time.

**All components, sealants, fasteners, or materials shall be approved for specific use or application described by the designs, and shall be compatible with all material with which each component comes in contact with.*

MILBRANDT ARCHITECTS

25 Central Way, Suite 210
Kirkland, Washington 98033
P: 425.454.7130 F: 425.658.1208
Web: www.milbrandtarch.com

© Copyright 2023
Milbrandt Architects, INC., P.S.
All rights reserved

11063 REGISTERED ARCHITECT
ANNA P. THOMPSON
STATE OF WASHINGTON

Building Envelope Details

Bradley Heights Apartments

Puyallup, Wa

Timberlane Partners

Revisions

No.	Date	Description

PRMU20240279

Initial Publish Date:

Date Plotted: 5-1-25

Job No.: 23-06

Drawn By: REW/DJV

Sheet No.: **BE3**

City of Puyallup
Innovation & Permitting Services
ISSUED PERMIT
Building | Planning
Engineering | Public Works
Fire | Parks

P:\2306\BE-SHEETS\BE1-BE5.DWG

CLEAN AND PREPARE SURFACES PRIOR TO COATING, REFER TO MANUFACTURER'S INSTALLATION INSTRUCTIONS FOR BEST PRACTICES.

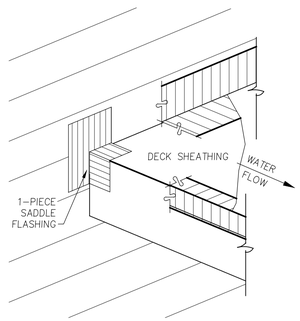

14 1-PIECE DECK SADDLE FLASHING

NO SCALE

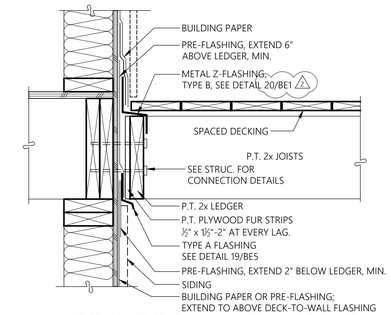

2 DECK TO WALL FLASHING SPACED DECKING

1-1/2" = 1'-0"

SECTION

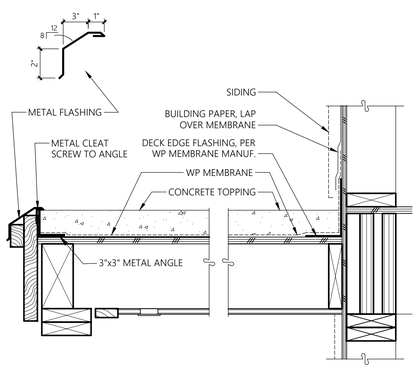

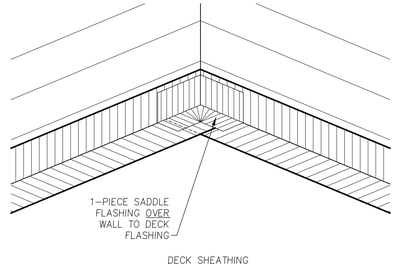

15 DECK FLASHING - INSIDE CORNER

NO SCALE

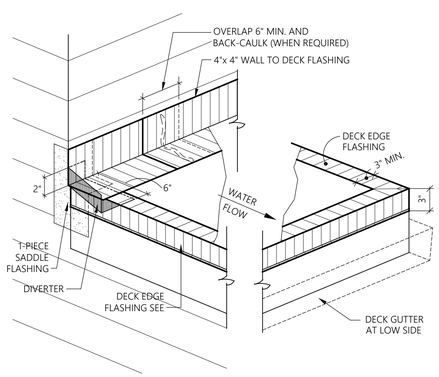

20 DECK DETAILS

NO SCALE

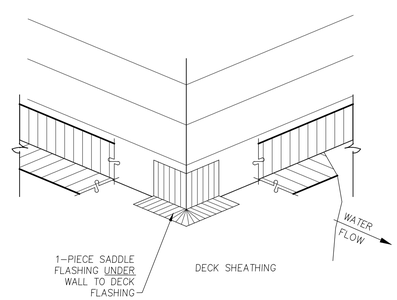

16 DECK FLASHING - OUTSIDE CORNER

NO SCALE

BE-Sheet Disclaimer

The details in the BE-Sheets are intended to meet or exceed all manufacturer recommended installation instructions, any letters of approval provided by a manufacturer to the Contractor, local codes, standards set by specific associations, best practices set by the industry or any other group or organization as acknowledged by the industry.

All manufacturer recommendations should be followed when installing specific materials.

If a Subcontractor or installer finds a situation where the BE-Sheet details conflict or fall below any standards set forth by the organizations mentioned above, it will be the responsibility of the Subcontractor to seek appropriate and written clarification from the Contractor before proceeding. The Contractor reserves its right to add, change, modify or update any of the details at any time.

**All components, sealants, fasteners, or materials shall be approved for specific use or application described by the designs, and shall be compatible with all material with which each component comes in contact with.*

MILBRANDT ARCHITECTS

25 Central Way, Suite 210
Kirkland, Washington 98033
P: 425.454.7130 F: 425.658.1208
Web: www.milbrandtarch.com

© Copyright 2023
Milbrandt Architects, INC., P.S.
All rights reserved

11063 REGISTERED ARCHITECT
ANNA P. THOMPSON
STATE OF WASHINGTON

Building Envelope Details

Bradley Heights Apartments

Puyallup, Wa

Timberlane Partners

Revisions

No.	Date	Description

PRMU20240279

Initial Publish Date:

Date Plotted: 5-1-25

Job No.: 23-06

Drawn By: REW/DJV

Sheet No.: BE4

H:\2306\BE-SHEETS\BE1-BE5.DWG

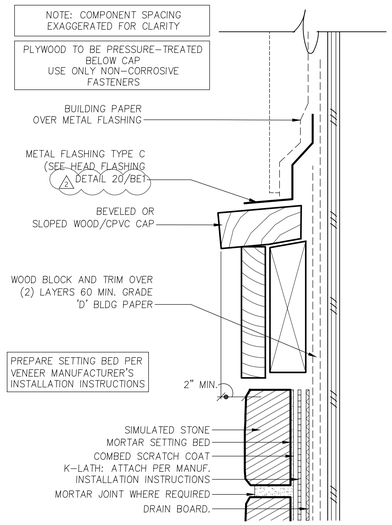

18 TYPICAL WATERTABLE TRIM

4" = 1'-0" SECTION

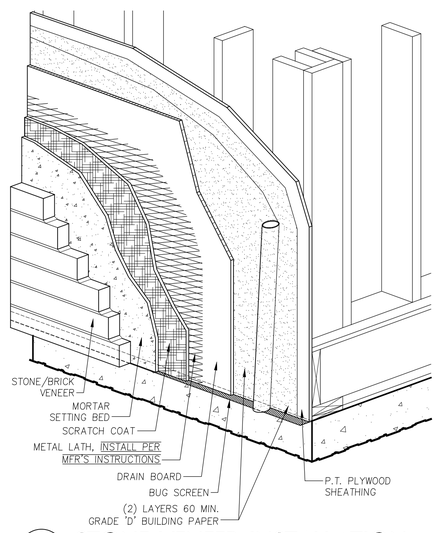

14 STONE VENEER INSTALLATION

NO SCALE

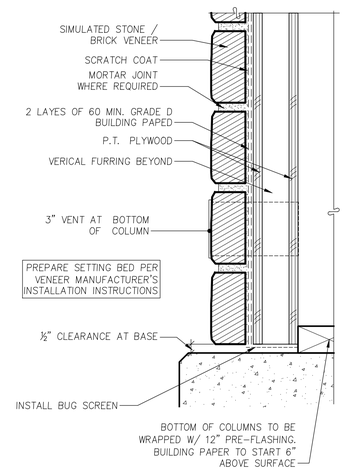

10 BRICK VENEER AT COLUMN BASE

3" = 1'-0" SECTION

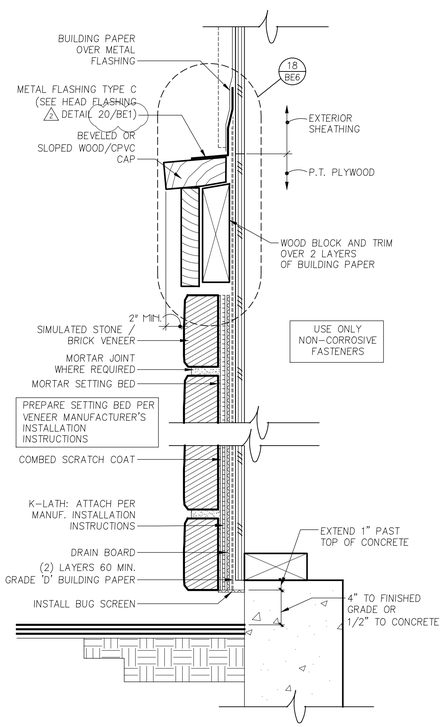

20 STONE WATERTABLE ON FRAMING

3" = 1'-0" SECTION

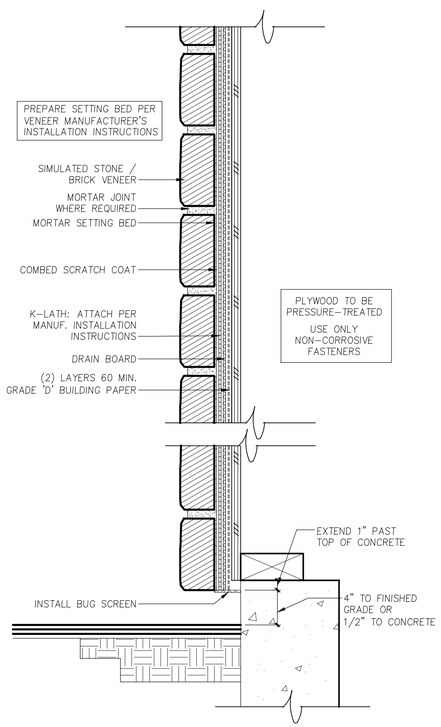

16 STONE ON FRAMING (FULL-HEIGHT)

3" = 1'-0" SECTION

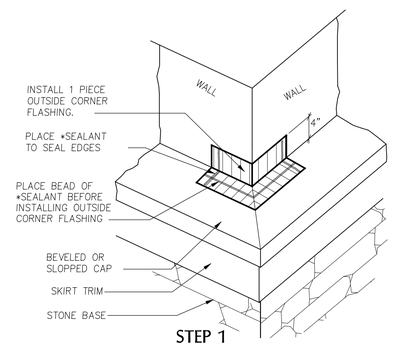

STEP 1

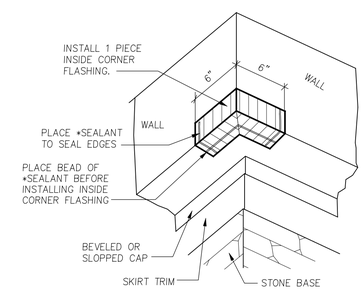

STEP 1

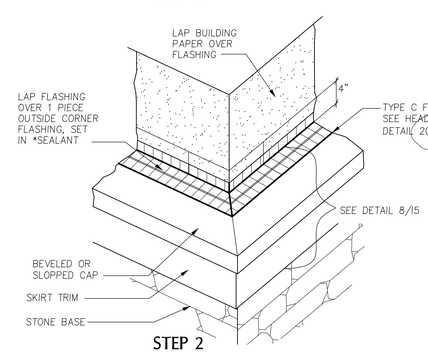

STEP 2

OUTSIDE CORNER

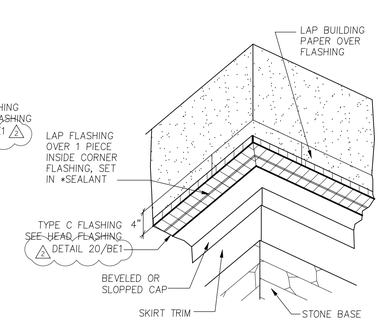

STEP 2

INSIDE CORNER

12 STONE TRIM FLASHING (WATERTABLE TRIM)

NO SCALE

BE-Sheet Disclaimer

The details in the BE-Sheets are intended to meet or exceed all manufacturer recommended installation instructions, any letters of approval provided by a manufacturer to the Contractor, local codes, standards set by specific associations, best practices set by the industry or any other group or organization as acknowledged by the industry.

All manufacturer recommendations should be followed when installing specific materials.

If a Subcontractor or installer finds a situation where the BE-Sheet details conflict or fall below any standards set forth by the organizations mentioned above, it will be the responsibility of the Subcontractor to seek appropriate and written clarification from the Contractor before proceeding. The Contractor reserves its right to add, change, modify or update any of the details at any time.

**All components, sealants, fasteners, or materials shall be approved for specific use or application described by the designs, and shall be compatible with all material with which each component comes in contact with.*

City of Puyallup
Innovation & Technology Services
Digital Archive
Building | Planning
Engineering | Public Works
Fire | Parks

MILBRANDT ARCHITECTS
25 Central Way, Suite 210
Kirkland, Washington 98033
P: 425.454.7130 F: 425.658.1208
Web: www.milbrandtarch.com

© Copyright 2023
Milbrandt Architects, INC., P.S.
All rights reserved

11063 REGISTERED ARCHITECT
ANNA P. THOMPSON
STATE OF WASHINGTON

Building Envelope Details

Bradley Heights Apartments

Puyallup, Wa

Timberlane Partners

Revisions

No.	Date	Description

PRMU20240279

Initial Publish Date:

Date Plotted: 5-1-25

Job No.: 23-06

Drawn By: REW/DJV

Sheet No.: **BE5**

P:\2306\BE-SHEETS\BE1-BE5.DWG

GENERAL NOTES

GENERAL NOTES – MECHANICAL

1. REFERENCE TO RELATED WORK: "REF" INDICATIONS DENOTE WORK COVERED ELSEWHERE (ARCHITECTURAL, STRUCTURAL, CIVIL, ELECTRICAL, LANDSCAPE, OR KITCHEN), OR ITEM BASED ON A SPECIFIC MANUFACTURER'S DIMENSIONS (VERIFY).

2. ELECTRICAL CHARACTERISTICS: REFER TO ELECTRICAL DRAWINGS FOR ELECTRICAL CHARACTERISTICS (VOLTAGES, ETC. OF MECHANICAL EQUIPMENT, UNLESS OTHERWISE INDICATED.

3. CODES: COMPLETE INSTALLATION OF THE MECHANICAL SYSTEM SHALL BE PER THE APPLICABLE BUILDING, MECHANICAL, ENERGY, PLUMBING, FIRE, AND HEALTH CODES AND REGULATIONS AS ADOPTED BY THE LOCAL AHJ.

4. PREPARE AND SUBMIT FOR REVIEW A SHOP DRAWING BASED ON FINAL STRUCTURAL SHOP DRAWINGS FOR LOCATING AND ROUTING ALL DUCTWORK, DAMPERS, EQUIPMENT, PIPING, ETC.
   A. COORDINATE FLOOR AND BEAM PENETRATIONS WITH STRUCTURAL.
   B. COORDINATE FINAL LOCATION AND ROUTING WITH CEILING, LIGHTS, WALLS, FIRE SPRINKLER PIPING, AND OTHER TRADES WORK.
   C. INCLUDE ADDITIONAL OFFSETS, ELBOWS, ROUTING, EQUIVALENT DUCT SIZING EXCHANGE, RELOCATING, ETC. AS REQUIRED FOR A COMPLETE OPERATING MECHANICAL SYSTEM.
   D. PROVIDE SHOP DRAWINGS AT NO ADDITIONAL COST TO THE OWNER.

5. MECHANICAL CONTRACTOR SHALL LOCATE AND COORDINATE EXACT LOCATION OF ALL MECHANICAL EQUIPMENT WITHIN THE STRUCTURE.

6. ACCESS DOORS: COORDINATE WITH ARCHITECT AND LOCATE ALL ACCESS DOORS ON SHOP DRAWINGS PRIOR TO BEGINNING OF CONSTRUCTION. ACCESS DOORS IN FIRE RATED STRUCTURE SHALL BE FIRE RATED. VERIFY ACCESS DOOR LOCATIONS WITH GENERAL CONTRACTOR PRIOR TO BIDDING.

7. RATED PENETRATION: DUCT PENETRATIONS THROUGH RATED ENCLOSURES SHALL BE FIRE/SMOKE DAMPERED PER THE LATEST EDITION OF THE UNDERWRITERS LABORATORIES(UL) FIRE RESISTANCE WITH HOURLY RATINGS FOR THROUGH–PENETRATION FIRE STOPS SYSTEM VOLUME #2, OR SHALL BE INSTALLED IN STRICT ACCORDANCE WITH THE MANUFACTURER'S UL LISTINGS (3M OR EQUIVALENT). DETERMINE REQUIREMENTS WITH GENERAL CONTRACTOR PRIOR TO BID.

8. EXHAUST OUTLETS: SOURCE–SPECIFIC FANS SHALL BE VENTED TO OUTDOORS WITH A MINIMUM 3' CLEARANCE BETWEEN VENT OUTLETS AND BUILDING OPENINGS, AND 10' MINIMUM BETWEEN VENT OUTLETS AND MECHANICAL AIR INTAKES.

9. ROOF PENETRATIONS: SEE ARCHITECTURAL DRAWINGS FOR ROOF CAP, ROOF CURB, ROOF DRAIN, AND VTR DETAILS.

10. EXPOSED PIPING: PROVIDE CHROME PLATING FOR EXPOSED PIPING IN FINISHED ROOMS.

11. PENETRATIONS: PROVIDE ESCUTCHEON PLATES FOR EXPOSED PIPING PENETRATIONS AND SHEET METAL FLASHING FOR EXPOSED DUCTWORK PENETRATIONS.

12. SHAFT AND PLENUM CONNECTIONS: SEAL CONNECTIONS TO AIR SHAFTS AIRTIGHT. PROVIDE AIRTIGHT SEAL AROUND PENETRATIONS IN AIR PLENUMS.

13. LIGHT FIXTURE CLEARANCE: COORDINATE LOCATIONS OF MECHANICAL WORK TO PROVIDE CLEARANCES OVER LIGHTING FIXTURES FOR REMOVAL AND REPLACEMENT.

14. MOTORS: COMPLY WITH ENERGY CODE ENFORCED BY AHJ FOR MINIMUM EFFICIENCIES UNDER FULL LOAD.

15. ACCESS CLEARANCES FOR MAINTENANCE AND REPLACEMENT: VERIFY PHYSICAL DIMENSIONS OF EQUIPMENT TO ENSURE THAT ACCESS CLEARANCES CAN BE MET. COORDINATE LOCATIONS OF MECHANICAL WORK AND WORK OF OTHER TRADES TO PROVIDE ACCESS CLEARANCES FOR SERVICE AND MAINTENANCE.

COORDINATION REQUIREMENTS

1. PIPING: COORDINATE WITH STRUCTURAL FOR EXACT LOCATION OF ALL STRUCTURAL FRAMING AND FOOTINGS AND FINALIZE THE EXACT ROUTING OF ALL PIPES WITH STRUCTURAL AND AT THE SITE PRIOR AND DURING THE CONSTRUCTION.

2. DUCTWORK: LOCATE AND COORDINATE THE EXACT LOCATION OF DUCTWORK WITH STRUCTURAL PLANS AND WITH THE GENERAL CONTRACTOR PRIOR TO INSTALLATION OF ANY STRUCTURE OR EQUIPMENT. COORDINATE WITH FRAMING CONTRACTOR TO ASSURE JOIST SPACES LINE UP WHEN DUCTWORK MUST PASS THROUGH DIFFERENT JOIST SPACES.

3. ADJUSTMENTS: ALL EQUIPMENT, MOTORS, FANS GAS BURNERS, IGNITION DEVICES, DRIVES, ETC. SHALL BE ADJUSTED AND BALANCED TO OPERATE AT SPECIFIED RATINGS AS REQUIRED FOR THIS PROJECT SITE AND ACCOUNTING FOR ELEVATION ABOVE SEA LEVEL.

4. APPROVALS: MECHANICAL AND PLUMBING EQUIPMENT SHALL BE APPROVED FOR INSTALLATION IN THE PROJECT LOCATION AND SHALL HAVE ALL CERTIFICATIONS AND RATINGS TO MEET ALL ENERGY, POLLUTION, ENVIRONMENTAL, SEISMIC, ETC. CODES AND REGULATIONS. THE CONTRACTOR SHALL COORDINATE WITH HIS MANUFACTURE SUPPLIERS AND SHALL INCLUDE ALL COSTS REQUIRED TO MEET THESE REQUIREMENTS IN HIS BID.

5. FIRE PROTECTION: CONTRACTOR SHALL PROVIDE A FULLY DESIGNED FIRE PROTECTION SPRINKLER SYSTEM IN COMPLIANCE WITH NFPA AND LOCAL CODES. PROVIDE DESIGN, PERMITS, MATERIALS, INSTALLATION, TESTING AND ALL OTHER FOR A FULLY OPERATIONAL SYSTEM. LOCATION OF ALL PIPING TO BE COORDINATED WITH OTHER TRADES.

PIPING NOTES

1. DISASSEMBLY PROVISIONS: PROVIDE UNIONS OR FLANGES AT PIPING CONNECTIONS TO EQUIPMENT, COILS, TRAPS, CONTROL VALVES, AND OTHER COMPONENTS TO ALLOW DISASSEMBLY FOR MAINTENANCE.

2. REDUCERS: PROVIDE AS REQUIRED FROM LINE PIPE SIZE TO EQUIPMENT, TRAP, COIL, AND CONTROL VALVE CONNECTION SIZES.

3. OFFSETS: PROVIDE FOR BRANCH LINES TO EQUIPMENT.

4. DIELECTRIC UNIONS: PROVIDE AT CONNECTIONS OF DISSIMILAR PIPE.

5. REFRIGERANT PIPING: PROVIDE SIZING & INSTALLATION IN STRICT ACCORDANCE WITH MANUFACTURER'S INSTRUCTIONS.

6. CONDENSATE DRAIN: PROVIDE A P–TRAP FOR EACH HVAC UNIT CONDENSATE PAN WITH PLUG TEES FOR CLEANING. CONDENSATE DRAINS SHALL BE DISCHARGED TO AN INDIRECT WASTE OR OUTSIDE.

INSULATION/LINING NOTES

1. ENERGY CODE: AS A MINIMUM, COMPLY WITH THICKNESSES AND TYPES LISTED IN ENERGY CODE ENFORCED BY AHJ.

2. EXTENT OF INTERNAL DUCT LINING:
   A. GRILLE AND DIFFUSER BOXES AND BOOTS.
   B. TRANSFER DUCTS.
   C. THE FIRST 10 FEET OF SUPPLY AND RETURN DUCTWORK FROM THE AIR HANDLER.

3. EXTENT OF EXTERNAL DUCT INSULATION:
   A. SUPPLY AND RETURN AIR IN UNCONDITIONED SPACES, MECHANICAL ROOMS, ELECTRICAL ROOMS, AND EQUIPMENT ROOMS NOT SPECIFIED TO BE INTERNALLY LINED.
   B. SUPPLY AIR ABOVE CEILINGS OR EXPOSED NOT SPECIFIED TO BE INTERNALLY LINED.
   C. OUTDOOR AIR INTAKE.

4. MISCELLANEOUS DUCT FITTINGS (CONICAL TAKEOFFS, ETC.): WRAP WITH INSULATION FOR CONDENSATION CONTROL.

PLAN NOTES

1. DUCTWORK SHALL BE METALLIC DUCTWORK

2. TEST AND BALANCE WORK SHALL BE PERFORMED BY AN INDEPENDENT TEST AND BALANCE AGENCY. PROVIDE (3) COPIES OF TEST AND BALANCE REPORT TO OWNER.

3. COORDINATE DUCTWORK WITH MISCELLANEOUS OBSTRUCTIONS IN CEILING SPACE.

4. RESTROOM EXHAUST SHALL BE A MINIMUM OF 10' FROM ANY MECHANICAL OUTSIDE AIR INTAKES.

5. ROUTE DUCTWORK UNDERNEATH JOISTS UON.

6. TRANSITION DUCT UNDER BEAMS AND DUCTS. FIELD VERIFY AVAILABLE CEILING CAVITY DIMENSIONS.

7. COORDINATE MOUNTING HEIGHT OF DIFFUSERS WITH ARCHITECTURAL PLANS.

SHEET METAL NOTES

1. REFERENCE: SMACNA HVAC DUCT CONSTRUCTION STANDARDS, METAL AND FLEXIBLE, CURRENT EDITION.

2. CLEARANCE: COORDINATE DUCTWORK WITH MISCELLANEOUS OBSTRUCTIONS IN CEILING SPACE.

3. ROUND ELBOWS AND OFFSETS: FULL RADIUS (R/D = 1.5), 5–PIECE SEGMENTED OR STAMPED. REFER TO SMACNA HVAC FIG 2–7, 3–3. DO NOT USE ANGLED OFFSET (TYPE 1). MITERED OFFSET (TYPE 2) MAY BE USED UP TO 30 DEGREE OFFSET ANGLE.

4. ROUND TEES AND LATERALS: CONICAL TEE PER SMACNA HVAC FIG 3–5; DO NOT USE STRAIGHT TEE; DO NOT USE CONICAL SADDLE TAP FOR EXPOSED DUCTWORK IN FINISHED SPACES. 90–DEGREE TEE WITH OVAL TO ROUND TAP, LATERAL, AND 45–DEGREE RECTANGULAR LEAD–IN PER SMACNA HVAC FIG 3–4.

5. RECTANGULAR ELBOWS AND OFFSETS: FULL RADIUS WHERE SPACE PERMITS, R/W = 1.5; OTHERWISE USE SQUARE CORNER ELBOW WITH TURNING VANES.

6. RECTANGULAR DIVIDED FLOW FITTINGS: USE GENERALLY, EXCEPT BRANCHES TO TERMINALS; SMACNA HVAC FIG 2–5, TYPES 1, 2, 4A, AND 4B. DO NOT USE TYPE 3.

7. TURNING VANES: H.E.P. MANUFACTURER OR APPROVED HIGH EFFICIENCY PROFILE AIRFOIL TYPE FOR RECTANGULAR SQUARE THROAT ELBOWS. ACOUSTICAL TYPE FOR RETURN AIR MITERED ELBOWS.

8. TAKEOFFS TO OPENINGS: CONICAL TYPE WITH VOLUME DAMPER FOR ROUND DUCT BRANCHES PER SMACNA HVAC FIG 2–6, MINIMUM INLET DIAMETER 2 INCHES LARGER THAN DUCT SIZE. 45 DEGREE ENTRY FITTING FOR RECTANGULAR DUCT BRANCHES PER SMACNA HVAC FIG 2–6.

9. FLEXIBLE CONNECTIONS: PROVIDE AT EACH DUCT CONNECTION TO FANS, PACKAGED HVAC EQUIPMENT, EXTERNALLY ISOLATED AIR HANDLING UNITS, FAN COIL UNITS, AND SIMILAR EQUIPMENT. EXCEPTION: EQUIPMENT IN CORRIDOR CEILING SPACES WHERE FIRE RATING IS REQUIRED.

10. ALL DUCT WORK SHALL BE CLASSIFIED FOR LOW PRESSURE SYSTEMS PER IMC SECTION 603.

11. ALL DUCTS AND JOINTS SHALL BE SEALED PER IMC SECTION 603.

HVAC NOTES

1. ATTACHMENTS: AIR DISTRIBUTION OUTLETS AND LOUVERS SHALL HAVE ALL REQUIRED ACCESSORIES AND ATTACHMENTS FOR A COMPLETE CONNECTION TO THE SPECIFIC TYPE OF STRUCTURE THAT THEY ARE BEING ATTACHED TO. THIS INCLUDES, BUT IS NOT LIMITED TO, EXTERIOR BRICKS, GWB WALLS, GWB CEILING, ETC.

2. DUCTWORK: DUCTWORK SHALL BE SMOOTH SHEET METAL (CLASS–1). DUCTWORK THROUGH FIRE RATED STRUCTURE AND FLOOR SHALL BE MIN. 26 GA. STEEL. MAXIMUM LENGTH OF FLEXIBLE DUCTS SHALL BE 5'–0", UNLESS OTHERWISE NOTED ON DRAWINGS. DUCTWORK SIZES SHOWN ARE INSIDE CLEAR DIMENSIONS.

3. SEISMIC: PROVIDE SEISMIC RESTRAINTS FOR MECHANICAL EQUIPMENT, PIPING, AND DUCTWORK PER SMACNA AND LOCAL REGULATIONS.

4. FILTER CLEARANCE: PROVIDE ADEQUATE CLEARANCE FOR CHANGING AIR FILTERS.

5. DUCTWORK AND PIPING OUTSIDE OF MECHANICAL ROOMS SHALL BE CONCEALED, COORDINATE WITH THE GENERAL CONTRACTOR TO FUR–OUT AS REQUIRED.

6. FIRE RATINGS: RATED FLOOR/CEILING JOINT SPACES HAVING DUCTWORK INSIDE THEM SHALL BE FIRE/SMOKE PROTECTED TO MAINTAIN THE 1–HOUR FLOOR/CEILING RATING PER LOCAL JURISDICTIONS. EXHAUST DUCTWORK PENETRATING THE 1–HOUR ROOF/CEILING OR FLOOR/CEILING ASSEMBLY SHALL HAVE ACCESSIBLE CEILING FIRE DAMPERS. ALTERNATIVELY, THE EXHAUST DUCTWORK SHALL BE ROUTED INSIDE A RATED SHAFT TO PROTECT THE CEILING/ROOF RATING PER THE LOCAL JURISDICTIONS.

7. FIRESTOP: PIPE, DUCT AND CONDUIT PENETRATIONS THROUGH RATED ASSEMBLIES SHALL BE FIRE AND SMOKE STOPPED PER CODE.

8. DUCTWORK: DUCTWORK SHALL BE SMOOTH SHEET METAL (CLASS–1). DUCTWORK THROUGH FIRE RATED STRUCTURE AND FLOOR SHALL BE MIN. 26 GA. STEEL. MAXIMUM LENGTH OF FLEXIBLE DUCTS SHALL BE 5'–0" UNLESS OTHERWISE NOTED ON DRAWINGS. DUCTWORK SIZES SHOWN ARE INSIDE CLEAR DIMENSIONS.

9. VOLUME DAMPERS: PROVIDE AN ACCESSIBLE MANUAL VOLUME DAMPER FOR EACH SUPPLY, RETURN, OSA AND EXHAUST OPENING, LOCATED AS FAR UPSTREAM AS POSSIBLE FROM THE OPENING. PROVIDE A MANUAL VOLUME DAMPER FOR BRANCH MAINS SERVING MORE THAN ONE OPENING. VOLUME DAMPERS IN NON–ACCESSIBLE CEILING SHALL HAVE A CONTROL ARM EXTENDED TO AN ACCESSIBLE LOCATION. PROVIDE "YOUNG" REGULATOR OR EQUAL. EXACT LOCATION OF CONTROL DEVICES VISIBLE IN FINISHED SPACES SHALL BE COORDINATED WITH THE ARCHITECT.

10. CORRIDOR THERMOSTAT: PROVIDE TAMPERPROOF THERMOSTATS IN CORRIDORS. DO NOT PROVIDE PLASTIC GUARDS TO MAKE THE THERMOSTATS TAMPERPROOF. PROVIDE BLANK SECURABLE THERMOSTAT COVERS.

APPLICABLE CODE

BUILDING CODE:

2018 WASHINGTON STATE ENERGY CODE–RESIDENTIAL BY WASHINGTON ADMINSTRATIVE CODE CHAP 51–50 (WSEC)

2018 INTERNATIONAL RESIDENTIAL CODE WITH ADMINISTRATIVE CODE CHAP 51–51 (WSRC)

2018 INTERNATIONAL MECHANICAL CODE WITH ADMINISTRATIVE CODE CHAP 51–52 (WSMC)

DRAWINGS ARE DIAGRAMMATIC, SHOWING THE GENERAL LOCATION, TYPE, LAYOUT, AND EQUIPMENT REQUIRED. THE DRAWINGS SHALL NOT BE SCALED FOR EXACT MEASUREMENT. REFER TO ARCHITECTURAL DRAWINGS FOR DIMENSIONS. REFER TO MANUFACTURER'S STANDARD INSTALLATION DRAWINGS FOR EQUIPMENT CONNECTIONS AND INSTALLATION REQUIREMENTS. PROVIDE DUCTWORK, CONNECTIONS, ACCESSORIES, OFFSETS, AND MATERIALS NECESSARY FOR A COMPLETE SYSTEM.

PRE-CON MEETING NOTES

CONTRACTORS SHALL ATTEND A PRE–CONSTRUCTION MEETING WITH THE ENGINEER FOR THE PURPOSE OF REVIEWING THE WORK PRIOR TO ORDERING ANY EQUIPMENT OR PERFORMING ANY WORK. THE MEETING SHALL BE LOCATED AT THE PROJECT SITE ON A DATE AND TIME TO BE MUTUALLY AGREED. THE MEETING WILL BE A WORKING SESSION. THE MEETING WILL BE FACILITATED BY THE ENGINEER AND THE AGENDA WILL INCLUDE A DETAILED REVIEW OF THE PLANS AND SPECIFICATIONS, CROSS CHECK WITH OTHER TRADES FOR COORDINATION ISSUES, REVIEW OF PROPOSED PRODUCTS, REVIEW OF PLANNED MEANS AND METHODS,AND ON–SITE INVESTIGATION OF FIELD CONDITIONS RELATIVE TO EXISTING CONDITIONS THAT COULD AFFECT THE WORK. PERSONS ATTENDING THE MEETING SHALL BE KNOWLEDGEABLE OF THE PROJECT AND SHALL BE THE SPECIFIC PERSONS INTENDED TO CONTINUE WITH THE PROJECT THROUGH TO COMPLETION. IF REQUIRED, REVISED PLANS WILL BE ISSUED THROUGH OFFICIAL CHANNELS. CHANGES IN THE BID PRICE WILL BE DISCUSSED, BUT NO CHANGE ORDERS WILL BE ISSUED UNLESS PROCESSED THOUGH OFFICIAL CHANNELS. IT SHALL BE UNDERSTOOD THAT THE ENGINEER HAS NO AUTHORITY TO ISSUE CHANGE ORDERS.

THE FOLLOWING TRADES SHALL BE REPRESENTED FOR THE MINIMUM TIME INDICATED:

MECHANICAL SHEET METAL	4 HOURS
PLUMBING/PIPING	4 HOURS
ELECTRICAL	4 HOURS
SPRINKLER	2 HOURS
GENERAL CONTRACTOR	ALL SESSIONS

ANNOTATIONS

ACU	AIR CONDITIONING UNIT
AFF	ABOVE FINISHED FLOOR
AHJ	AUTHORITY HAVING JURISDICTION
AHU	AIR HANDLING UNIT
BDD	BACKDRAFT DAMPER
BHP	BRAKE HORSEPOWER
BTUH	BRITISH THERMAL UNIT PER HOUR
C	COMMON
CAP	CAPACITY
CC	COOLING COIL
CD	CEILING DIFFUSER
CFM	CUBIC FEET PER MINUTE
CLG	CEILING, COOLING
CO	CLEANOUT
COMB	COMBUSTION
CONT	CONTINUE, CONTROL
CONTR	CONTRACTOR
COP	COEFFICIENT OF PERFORMANCE
CWS	CHILLED WATER SUPPLY
CWR	CHILLED WATER RETURN
D	DIAMETER
DB	DRY BULB, DECIBEL
DEG	DEGREE
DIM	DIMENSION
DISCH	DISCHARGE
DN	DOWN
EA	EXHAUST AIR
EAT	ENTERING AIR TEMPERATURE
EER	ENERGY EFFICIENCY RATIO
EF	EXHAUST FAN
EFF	EFFICIENCY
EG	EXHAUST GRILLE, ENGINE GENERATOR
ELEC	ELECTRIC
EQUIV	EQUIVALENT
ESP	EXTERNAL STATIC PRESSURE
EXH	EXHAUST
EXT	EXTERIOR, EXTERNAL
F	FAHRENHEIT
FD	FIRE DAMPER
FCU	FAN COIL UNIT
FLR	FLOOR
FPM	FEET PER MINUTE
FPS	FEET PER SECOND
FSD	FIRE/SMOKE DAMPER
G	GAS
GRD	GRILLES, REGISTERS, AND DIFFUSERS
GWB	GYPSUM WALLBOARD
HORIZ	HORIZONTAL
HP	HORSEPOWER, HEAT PUMP
HRU	HEAT RECOVERY UNIT
HVAC	HEATING, VENTILATING, AND AIR CONDITIONING
HVU	HEATING AND VENTILATION UNIT
HWR	HIGH WALL RETURN, HOT WATER RETURN
HWS	HIGH WALL SUPPLY, HOT WATER SUPPLY
HX	HEAT EXCHANGER
ID	INDIRECT DRAIN, INSIDE DIAMETER
IN	INCH
KW	KILOWATT
L	LONG, LENGTH
LB	POUND
LWR	LOW WALL RETURN
LWS	LOW WALL SUPPLY
MBH	THOUSAND BTU PER HOUR
MECH	MECHANICAL
MCA	MINIMUM CIRCUIT AMPACITY
MOCP	MAXIMUM OVER CURRENT PROTECTION
MTD	MOUNTED
OSA	OUTDOOR AIR
OBD	OPPOSED BLADE DAMPER
OD	OUTSIDE DIMENSION OR DIAMETER
OPNG	OPENING
P	PUMP
PD	PRESSURE DROP
POC	POINT OF CONNECTION
PRV	PRESSURE REDUCING VALVE
PSIG	POUNDS PER SQUARE INCH GAUGE
RA	RETURN AIR
REF	REFERENCE
RF	RELIEF FAN
RG	RETURN GRILLE
RPM	REVOLUTIONS PER MINUTE
SA	SUPPLY AIR
SCH	SCHEDULE
SF	SUPPLY FAN, SQUARE FOOT
SENS	SENSIBLE
SG	SUPPLY GRILLE
SMACNA	SHEET METAL AND AIR CONDITIONING CONTRACTORS NATIONAL ASSOCIATION
SO	SCREENED OPENING
SP	STATIC PRESSURE
SS	STAINLESS STEEL, SANITARY SEWER
SQ	SQUARE
TG	TRANSFER GRILLE
TYP	TYPICAL
UH	UNIT HEATER
UON	UNLESS OTHERWISE NOTED
V	VENT
VENT	VENTILATION, VENTILATOR
VTR	VENT THRU ROOF
W	WASTE, WATT, WIDE
WB	WET BULB (TEMPERATURE)

SYMBOLS

DUCTWORK

- 18x12 — DUCT (1ST FIGURE = SIDE SHOWN, 2ND FIGURE = SIDE NOT SHOWN)
- UP DOWN — DUCT SECTION, POSITIVE PRESSURE
- UP DOWN — DUCT SECTION, NEGATIVE PRESSURE
- UP DOWN — ROUND DUCT SECTION
- UP UP UP — DUCT PENETRATION THRU FLOOR OR ROOF
- VOLUME DAMPER
- FSD FSD — FIRE/SMOKE DAMPER (—◀ = HORIZ DUCT, —◆ = VERT DUCT), 2–HR RATED, UON
- FD FD — FIRE DAMPER (—◀ = HORIZ DUCT, —◆ = VERT DUCT), 2–HR RATED, UON
- 90° ELBOW, R/D OR R/W=1.5
- SQUARE CORNER ELBOW WITH TURNING VANES
- 90° TAKE–OFF OR TEE
- 90° CONICAL TAKE–OFF
- 45° LATERAL TAKE–OFF
- TRANSITION OR REDUCER (FOT = FLAT ON TOP, FOB = FLAT ON BOTTOM)
- WYE FITTING
- 90° RECTANGULAR TAKE–OFF WITH 45° TAPER
- 90° DIVERGING RECTANGULAR TEE, EITHER RADIUS OR TURNING VANES
- PARALLEL FLOW BRANCH CONNECTION, EITHER RADIUS OR TURNING VANES
- FLEXIBLE DUCT
- Ø — ROUND DUCT INDICATOR

EQUIPMENT

- EF–1 — TYPICAL EQUIPMENT DESIGNATION (EXHAUST FAN SHOWN)
- DSD — DUCT SMOKE DETECTOR
- T — ROOM THERMOSTAT OR TEMPERATURE TRANSMITTER
- H — ROOM HUMIDISTAT OR HUMIDITY TRANSMITTER
- CO — CARBON MONOXIDE SENSOR
- SD — SMOKE DETECTOR

TERMINALS

- CD–12x12 400 OR CD–1 400 — DIFFUSER/GRILLE TYPE, AND NUMBER OR SIZE; DESIGN CFM (WHERE APPLICABLE)
- CEILING DIFFUSER (FLOW ARROWS SHOWN FOR NON SYMMETRICAL AIRFLOW)
- CEILING RETURN/EXHAUST GRILLE
- LINEAR DIFFUSER, CEILING OR WALL MOUNTED (FLOW ARROWS SHOWN FOR NON SYMMETRICAL AIRFLOW)
- WALL SUPPLY GRILLE (SG)
- WALL RETURN/EXHAUST GRILLE (RG, EG)
- 50 — TRANSFER GRILLE (TG), DUCT CONNECTED, WALL MOUNTED W/ OPTIONAL CFM SHOWN
- TRANSFER GRILLE, CEILING MOUNTED WITH FULL–SIZED LINED DUCT CONNECTION

DRAWING INDEX

Sheet Number	Sheet Title	PERMIT SET 02/15/2024	PERMIT RESUBMITTAL SET 02/04/2025	PERMIT RESUBMITTAL 2 SET 5/2/2025	
M0.0	LEGEND, GENERAL NOTES, & DRAWING INDEX	X	X	X	
M0.1	PROJECT NOTES	X	X	X	
M0.2	TABLES & CALCULATIONS	X	X	X	
M0.3	MECHANICAL SCHEDULES & WSEC FORMS	X	X	X	
M2.0	HVAC PLAN – FLOOR PLANS	X	X	X	
M3.0	HVAC ENLARGED PLANS	X	X	X	
M3.1	HVAC ENLARGED PLANS	X	X	X	

NO.	DATE	DESCRIPTION
2	5/2/25	PERMIT RESUBMITTAL #2
1	2/4/25	PERMIT RESUBMITTAL #1

REVISIONS

JOB J. OPLINGER — STATE OF WASHINGTON — REGISTERED PROFESSIONAL ENGINEER — 02/07/2025

ROBISON ENGINEERING, INC
19401 40TH AVE W, SUITE 302
LYNNWOOD, WA 98036
206.364.3343 RL
REI PROJECT NO.: 777-006
CONTACT: ARIK ESPINELI

DRAWN: OP
DESIGNED: ABE
CHECKED: ABE
APPROVED: JOB

PROJECT: BRADLEY HEIGHT APARTMENTS - BUILDING H
202 27TH AVE SE
PUYALLUP, WA 98374

ROBISON ENGINEERING, INC
19401 40TH AVE W, SUITE 302
LYNNWOOD, WA 98036
PHONE:(206)364.3343

PRMU20240279

DATE: 05/01/2025

SHEET TITLE: LEGEND, GENERAL NOTES, & DRAWING INDEX

SHEET NO. M0.0

ENERGY CODE NOTES

WASHINGTON STATE ENERGY CODE

1. HVAC THERMOSTATS SHALL BE SET TO MAINTAIN A MINIMUM DEADBAND OF 5°F IN AREAS SERVED AS REQUIRED PER **WSEC** C403.2.4.2.

2. PER **WSEC**, ALL DUCTS SHALL BE INSULATED AS FOLLOWS:

DUCT INSULATION SCHEDULE

CODE	DUCT SYSTEM	DUCT LOCATION AND USE (1)(2)(3)	MATERIAL	R-VALUE (MIN. INSTALLED)
WSEC TABLE C403.10.1.1	OUTSIDE AIR (4)	>= 2800 CFM INSIDE CONDITION SPACE AND UPSTREAM OF AUTOMATIC SHUTOFF DAMPER	MINERAL-WOOL BLANKET	16.0
		>= 2800 CFM INSIDE CONDITION SPACE AND DOWNSTREAM OF AUTOMATIC SHUTOFF DAMPER TO HVAC UNIT UNIT OR ROOM	MINERAL-WOOL BLANKET	8.0
		< 2800 CFM INSIDE CONDITION SPACE	MINERAL-WOOL BLANKET	7.0
WSEC TABLE C403.10.1.2	SUPPLY AIR & RETURN AIR (4)	OUTSIDE THE BUILDING (OUTDOOR AND EXPOSED TO WEATHER) WHICH INCLUDE ATTICS ABOVE INSULATION CEILINGS, PARKING GARAGE AND CRAWL SPACE	MINERAL-WOOL BLANKET	8.0
		UNCONDITIONED SPACE (ENCLOSED BUT NOT IN THE BUILDING CONDITIONED ENVELOPE)	MINERAL-WOOL BLANKET	6.0
		UNCONDITIONED SPACE WHERE THE DUCT CONVEYS AIR THAT IS WITHIN 15°F OF THE AIR TEMPERATURE OF THE SURROUNDING UNCONDITIONED SPACE (5)	MINERAL-WOOL BLANKET	3.3
		WHERE LOCATED IN THE BUILDING ENVELOPE ASSEMBLY	MINERAL-WOOL BLANKET	16.0
	SUPPLY AIR (4)	WITHIN CONDITIONED SPACE WHERE SUPPLY DUCT CONVEYS AIR <55°F OR >105°F	MINERAL-WOOL BLANKET	3.3
		WITHIN CONDITIONED SPACE THAT THE DUCT DIRECTLY SERVES WHERE SUPPLY DUCT CONVEYS AIR <55°F OR >105°F	MINERAL-WOOL BLANKET	0.0
		WITHIN CONDITIONED SPACE WHERE SUPPLY DUCT CONVEYS AIR >55°F OR <105°F	MINERAL-WOOL BLANKET	0.0
	RETURN OR EXHAUST AIR	WITHIN CONDITION SPACE, DOWNSTREAM OF AN ENERGY RECOVERY MEDIA, UPSTREAM OF AUTOMATIC SHUTOFF DAMPER	MINERAL-WOOL BLANKET	8.0
	RELIEF OR EXHAUST AIR	CONDITION SPACE AND DOWNSTREAM OF AN AUTOMATIC SHUTOFF DAMPER	MINERAL-WOOL BLANKET	16
		NOTES (1) DUCT INSULATION SHALL COMPLY WITH **WSEC** (2) INSULATION SHALL HAVE A MAXIMUM FLAME SPREAD INDEX OF 25 AND MAXIMUM SMOKE DEVELOPED INDEX OF 50 PER **WSEC** 604.3 (3) EXTERAL DUCT INSULATION IS IDENTIFIABLE PER **WSEC** 604.7 (4) VAPOR RETARDER IS INSTALLED ON SUPPLY AND OUTSIDE AIR DUCT PER **WSEC** 604.11 (5) CONDENSATION CONTROL FOR DUCTWORK		

3. MOTORIZED DAMPERS: PER **WSEC** C403.7.8.1 PROVIDE MOTORIZED DAMPERS ON ALL OUTSIDE AIR INTAKES, EXHAUST OUTLETS AND RELIEF OUTLETS SERVING CONDITIONED SPACES WHICH CLOSE AUTOMATICALLY WHEN THE SYSTEM IS OFF. RETURN AIR DAMPERS SHALL BE EQUIPPED WITH MOTORIZED DAMPERS. SEE **WSEC** C402.4.5.2 FOR EXCEPTIONS AND ADDITIONAL REQUIREMENTS.

RESIDENTIAL ENERGY CODE

1. WHOLE-HOUSE FAN EFFICACY PER TABLE R403.6.1.

2. EQUIPMENT AND APPLIANCE SIZING PER R403.7, HEATING AND COOLING EQUIPMENT AND APPLIANCES SHALL BE SIZED IN ACCORDANCE WITH ACCA MANUAL S OR OTHER APPROVED SIZING METHODOLOGIES BASED ON BUILDING LOADS CALCULATED IN ACCORDANCE WITH ACCA MANUAL J OR OTHER APPROVED HEATING AND COOLING CALCULATION METHODOLOGIES

3. ELECTRIC RESISTANCE ZONE PER R403.7.1, ELECTRIC ZONAL HEATING AS PRIMARY HEAT SOURCE SHALL INSTALL DUCTLESS MINI-SPLIT HEAT PUMP IN THE LARGEST ZONE IN THE DWELLING UNLESS TOTAL INSTALLED HEATING CAPACITY OF 2 KW PER DWELLING OR LESS.
4. PROVIDED ONE THERMOSTAT FOR EACH HEATING AND COOLING SYSTEM PER R403.1

5. PER R403.3.6, SUPPLY AND RETURN DUCTS IN CEILING INSULATION SHALL HAVE MIN R-8 INSULATION ALL AROUND. THE SUM OF THE CEILING INSULATION OF THE TOP AND BELOW OF THE DUCT SHALL BE MIN R-19, EXCLUDING THE R-VALUE OF THE DUCT INSULATION
.
6. MECHANICAL SYSTEM PIPING CARRYING FLUIDS ABOVE 105F OR BELOW 55F SHALL BE INSULATED WITH MIN R-6 PER R403.4. INSULATION SHALL BE PROTECTED FROM DAMAGE AND SHALL PROVIDE SHIELDING FROM SOLAR RADIATION. ADHESIVE TAPE SHALL NOT BE PERMITTED.

WHOLE HOUSE VENTILATION NOTES

OUTSIDE AIR

OUTSIDE AIR TO EACH RESIDENTIAL UNIT IS PROVIDED BY THE WHOLE HOUSE VENTILATION FAN (BEF-1). RATES WERE OBTAINED FROM **TABLE 403.8.1**. AIR PROVIDED THROUGH OPERABLE OPENINGS INSTALLED WITHIN THE WINDOW SYSTEM (TRICKLE VENTS). THE QUANTITY OF 4 SQUARE INCH TRICKLE VENTS ARE IDENTIFIED IN THE WHOLE HOUSE VENTILATION CRITERIA SCHEDULE. TRICKLE VENTS MAY BE COMBINED INTO LARGER VENT OF EQUIVALENT AREA. EACH EXTERIOR OCCUPIABLE LIVING SPACE SHALL BE PROVIDED WITH WITH AT LEAST ONE TRICKLE VENT.

THE BATHROOM EXHAUST FAN SHALL BE USED AS THE WHOLE HOUSE EXHAUST FAN. WHOLE HOUSE FAN TO BE EQUIPPED WITH AN ECM MOTOR AND 2-SPEED MOTOR. FAN TO RUN CONTINUOUSLY ON LOW SPEED AND HIGH SPEED SHALL BE ACTIVATED BY A FACTORY MOUNTED MOTION SENSOR. WHOLE HOUSE VENTILATION FANS SHALL OPERATE CONTINUOUSLY.

EXHAUST FAN ONLY VENTILATION SYSTEMS SHALL BE PROVIDED WITH OUTDOOR AIR TO EACH OCCUPIED SPACE, AND OR ANY SPACE THAT CAN BE OCCUPIED THROUGH ONE OF THE FOLLOWING METHODS:

OUTDOOR AIR MAY BE DRAWN THROUGH AIR INLETS INSTALLED IN EXTERIOR WALLS OR WINDOWS. THE AIR INLETS SHALL COMPLY WITH ALL OF THE FOLLOWING: **IMC W/WASHINGTON AMENDMENTS 403.8.6.1**

1. INLETS SHALL HAVE CONTROLLABLE, SECURE OPENINGS AND SHALL BE DESIGNED TO NOT COMPROMISE THE THERMAL PROPERTIES OF THE BUILDING ENVELOPES.
2. INLETS SHALL BE ACCESSIBLE TO OCCUPANTS INCLUDING COMPLIANCE WITH THE BARRIER FREE CODE.
3. INLETS SHALL BE SCREENED OR OTHERWISE PROTECTED FROM ENTRY BY INSECTS, LEAVES OR OTHER MATERIAL.
4. INLETS SHALL PROVIDE NOT LESS THAN 4 SQUARE INCHES OF NET FREE AREA FOR EACH 10 CFM OF OUTDOOR AIR REQUIRED.
5. ANY INLET WHICH PROVIDES 10 CFM AT 10 PASCALS AS IN ACCORDANCE WITH HVI 916 HOME VENTILATION INSTITUTE AIR FLOW TEST PROCEDURE, AND HVI 920 HOME VENTILATION INSTITUTE PRODUCT PERFORMANCE CERTIFICATION PROCEDURE ARE DEEMED EQUIVALENT TO 4 SQUARE INCHES OF NET FREE AREA.
6. EACH OCCUPIABLE SPACE SHALL HAVE A MINIMUM OF ONE AIR INLET THAT HAS A MINIMUM OF 4 SQUARE INCHES OF NET FREE AREA.

2

CALCULATIONS

RESIDENTIAL VENTILATION CALCULATIONS

UNIT TYPE	UNIT SQUARE FOOTAGE	NUMBER OF BEDROOMS	2018 IMC CRITERIA (1)			VENTILATION QUALITY ADJUSTMENT COEFFICIENT (3)	MINIMUM WHOLE HOUSE VENTILATION RATE, CFM	TOTAL CFM PROVIDED BY WHOLE HOUSE FAN SYSTEM
			FLOOR AREA, SQFT	NUMBER OF BEDROOMS	REQUIRED CFM (2)			
1 BEDROOM	660	1	500 – 1,000	1	30	1.5	45	55
2 BEDROOM	1000	2	500 – 1,000	2	35	1.5	53	55

NOTE:
(1) VENTILATION CRITERIA IS PER THE 2018 IMC, TABLE 403.4.2.
(2) MINIMUM OSA FOR CONTINUOUSLY OPERATING FAN(S).
(3) ADJUSTMENT COEFFICIENT IS PER 2018 IMC, TABLE 403.4.3 FOR A BALANCED, AND DISTRIBUTED WHOLE HOUSE VENTILATION SYSTEM.

RANGE HOOD VENTILATION NOTES

RESIDENTIAL UNIT NOTES:

1. PENETRATIONS OF THE RATED WALL ASSEMBLIES SHALL BE PROTECTED IN ACCORDANCE WITH IBC SECTION 717. REFER TO ARCHITECTURAL PLANS FOR PENETRATION DETAILS.

2. PER OWNER, THE FOLLOWING RANGE HOODS ARE BEING INSTALLED: STANDARD UNITS (MICRO/HOOD COMBO): WHIRLPOOL WMH31017H PER THE MANUFACTURER'S INSTALLATION INSTRUCTIONS, DUCT CONNECTION TO HOODS ARE 6ø. MINIMUM SIZE ROUND DUCT FOR HOOD VENTING SHALL BE 7".

STANDARD HOOD: WHIRLPOOL WMH31017H
MAXIMUM LENGTH (FT)
140

2

HOOD VENT LENGTH CALCULATION

UNIT TYPE	DRYER VENT LENGTH	RECTANGULAR TO ROUND TRANSITION	NUMBER OF 45 ELBOWS	NUMBER OF 90 ELBOWS	WALL CAP	TOTAL LENGTH
1-BED-END	30	1	0	2	1	95
1-BED-INT-2	55	1	0	3	1	130
2-BED	33	1	2	2	1	108
2-BED (BLDG E&F)	14	1	0	2	1	79

NOTE: (1) PER THE MANUFACTURER'S INSTALLATION INSTRUCTIONS EQUIVALENT LENGTH OF DUCT FITTINGS ARE AS FOLLOWS:

STANDARD FITTINGS

FITTING	EQUIVALENT VENT LENGTH (FT)
RECTANGULAR TO ROUND TRANSITION	5
90 ELBOW	10
45 ELBOW	5
WALL CAP	40

2

NO.	DATE	DESCRIPTION
2	5/2/25	PERMIT RESUBMITTAL #2
1	2/4/25	PERMIT RESUBMITTAL #1

REVISIONS

JOB J. OPITZ
STATE OF WASHINGTON
REGISTERED PROFESSIONAL ENGINEER
05/01/2025

ROBISON ENGINEERING, INC
19401 40TH AVE W, SUITE 302
LYNNWOOD, WA 98036
206.364.3343 (V)
REI PROJECT NO.: 777-006
CONTACT: ARIK ESPINELI

DRAWN: OP
DESIGNED: ABE
CHECKED: ABE
APPROVED: JOB

PROJECT: BRADLEY HEIGHT APARTMENTS - BUILDING H
202 27TH AVE SE
PUYALLUP, WA 98374

ROBISON ENGINEERING, INC
19401 40TH AVE W, SUITE 302
LYNNWOOD, WA 98036
PHONE:(206)364-3343

PRMU20240279

DATE: 05/01/2025

SHEET TITLE: PROJECT NOTES & CALCULATIONS

SHEET NO. M0.1

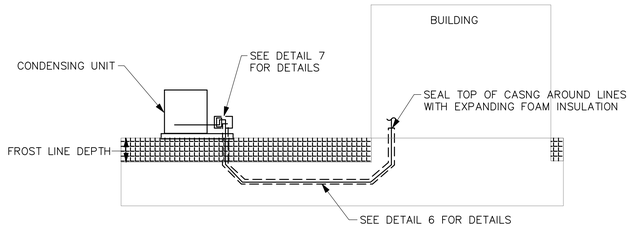

NOTES:

1. REFRIGERANT LINES MUST BE INSTALLED BELOW THE FROST LINES (24" MINIMUM). INCREASE MINIMUM DEPTH FOOT OR VEHICLE TRAFFIC OVER THE REFRIGERANT LINE PATH TO 36" MINIMUM.
2. USE 45° ELBOWS TO SIMPLIFY COVERING THE REFRIGERANT LINES WITH CASING FOR REFRIGERANT PIPING WITH OUTSIDE DIAMETERS OF UP TO ¾", SOFT TUBING CAN BE USED AND LARGE SWEEPING CURVES CAN BE BENT BY HAND.
3. PRESSURE–TEST REFRIGERANT PIPING BEFORE INSULATION AND COVERING WITH CASING
4. IF MORE THAN ONE SYSTEM IS INSTALLED, USE A SEPARATE CASING FOR EACH SET OF REFRIGERANT PIPING.
5. CAUTION: CASING MUST BE WATERTIGHT. IF ANY MOISTURE ENTERS THE CASING, SYSTEM PERFORMANCE WILL BE REDUCED, AND EQUIPMENT FAILURE MAY OCCUR. IF THIS OCCURS, THE WARRANTY OF THE EQUIPMENT IS NO LONGER VALID.

UNDERGROUND INSTALLATION OF REFRIGERANT PIPING DETAIL

SCALE: NONE

3

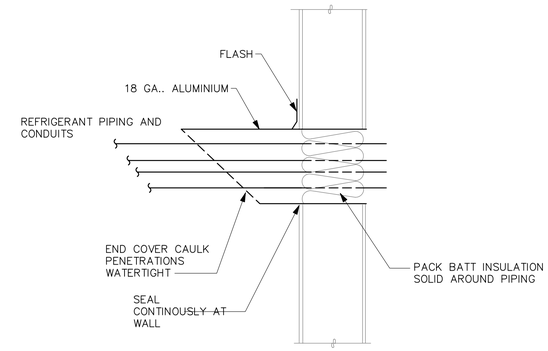

WALL PIPE PENETRATION DETAIL

SCALE: NONE

2

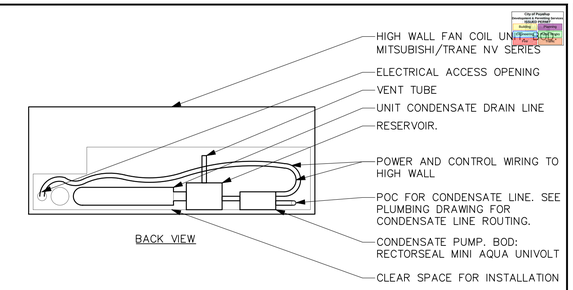

NOTE:
1. BOD: RECTORSEAL MINI AQUA UNIVOLT. FOLLOW OTHER CONDENSATE PUMP MANUFACTURE'S INSTRUCTION FOR INSTALLATION REQUIREMENT.

EXTERNAL CONDENSATE PUMP IN HIGH WALL DETAIL

SCALE: NONE

3

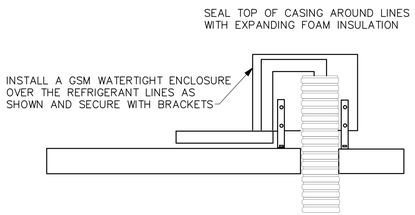

WATERTIGHT PIPING ENCLOSURE DETAIL

SCALE: NONE

7

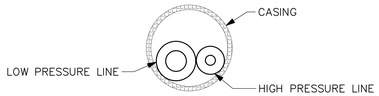

NOTES:

- REFRIGERNAT LINES MUST BE INSULATED SEPARATELY
- SEE PROTECTION FOR INSULATION THICKNESS
- IF POSSIBLE, INSTALL CASING AS ONE CONTINOUS PIECE OF FLEXIBLE WATERTIGHT DRAIN PIPE
- IF RIGID PVC CASING IS USED, SEAL THE JOINTS TO MAKE THEM WATERTIGHT.

TYPICAL CROSS SECTION OF PIPING DETAIL

SCALE: NONE

6

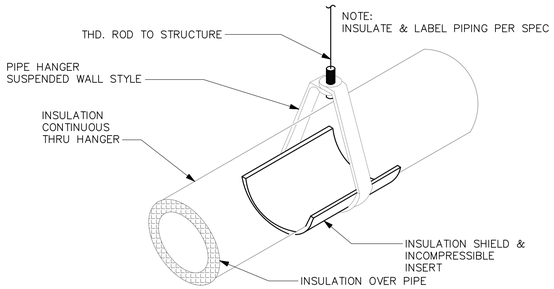

REFRIGERANT PIPE HANGER DETAIL

SCALE: NONE

5

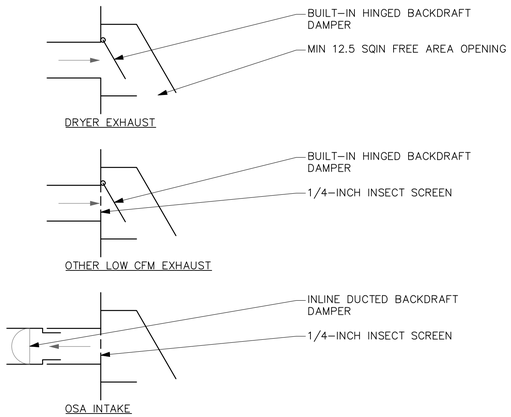

WALL CAP TERMINATION DETAIL

SCALE: NONE

4

NOT USED DETAIL

SCALE: NONE

11

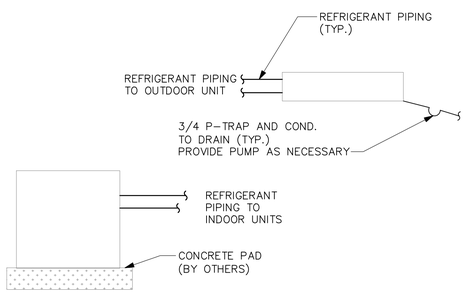

NOTES:

1. INSULATE BOTH LIQUID AND VAPOR LINES THRU OUT SYSTEM
2. SECURE OUTDOOR UNIT TO CONCRETE PAD
3. SIZE REFRIGERANT LINES BASED ON MITSUBISHI SYSTEM CALCULATIONS
4. CONTRACTOR TO FIELD VERIFY ROUTING FOR REFRIGERANT PIPING AND CONDENSATE DRAINS

SPLIT SYSTEM INSTALLATION DETAIL

SCALE: NONE

10

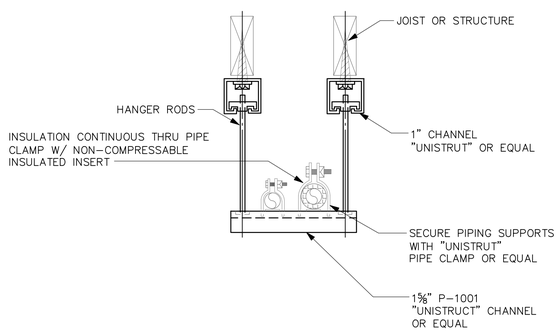

SUSPENDED REFRIGERANT PIPE SUPPORT DETAIL

SCALE: NONE

9

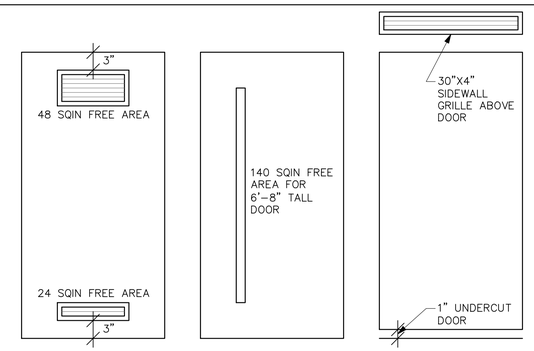

MANUFACTURE DOOR VENT. BASIS OF DESIGN: WHIRLPOOL DRYER. SEE MANUFACTURE'S INSTRUCTION FOR SPECIFIC REQUIREMENT.

ALT#1 DOOR VENT. BASIS OF DESIGN: LYNDEN DOOR VANAIR VENTILATED DOOR.

ALT#2 DOOR VENT. BASIS OF DESIGN: SIDEWALL GRILLE AND DOOR UNDERCUT.

ALT#3 DOOR VENT. BASIS OF DESIGN: FULLY LOUVERED DOOR. NOT SHOWN ON DETAIL.

LAUNDRY ROOM AND CLOSET DOOR DETAIL

SCALE: NONE

8

NO.	DATE	DESCRIPTION
2	5/2/25	PERMIT RESUBMITTAL #2
1	2/4/25	PERMIT RESUBMITTAL #1

REVISIONS

JOB J. OPPLIN
STATE OF WASHINGTON
REGISTERED PROFESSIONAL ENGINEER
03/01/2025

ROBISON ENGINEERING, INC
19401 40TH AVE W, SUITE 302
LYNNWOOD, WA 98036
206.364.3343 tel
REI PROJECT NO.: 777-006
CONTACT: ARIK ESPINELI

DRAWN: OP
DESIGNED: ABE
CHECKED: ABE
APPROVED: JOB

PROJECT: BRADLEY HEIGHT APARTMENTS - BUILDING H
202 27TH AVE SE
PUYALLUP, WA 98374

PRMU20240279

ROBISON ENGINEERING, INC
19401 40TH AVE W, SUITE 302
LYNNWOOD, WA 98036
PHONE:(206)364-3343

DATE: 05/01/2025

SHEET TITLE: DETAILS

SHEET NO. M0.2

MECHANICAL SCHEDULES

ELECTRIC HEATERS

EQUIP NO.	SERVICE	MOUNTING/ DISCHARGE	HEATING KW	ELECTRICAL VOLTAGE	BASIS OF DESIGN (3)
EWH-1	APARTMENT UNIT	WALL	1.0	208V/1P	(1)(2)
EWH-2	APARTMENT UNIT	WALL	1.5	208V/1P	(1)(2)

NOTES: (1) BROAN, KING, CADET OR EQUIVALENT.
(2) PROVIDE REMOTE THERMOSTAT. COORDINATE FINAL LOCATION WITH ELECTRICAL DRAWINGS.
(3) ALL ELECTRIC HEATERS TO BE FURNISHED AND INSTALLED BY ELECTRICAL CONTRACTOR.

FAN SCHEDULE

EQUIP NO.	SERVICE	TYPE	AIRFLOW, CFM	ESP, IN WG	ELECTRICAL VOLTAGE	ELECTRICAL HP	OPERATION	WEIGHT, LBS	BASIS OF DESIGN (1)(2)(3)
BEF-1	RESTROOM	CEILING MOUNTED	55/80	0.5	115V/1P	FHP	CONTINUOUS	10	GREENHECK SP-AP0511W (4)
BEF-2	RESTROOM	CEILING MOUNTED	50	0.5	115V/1P	FHP	(2)	10	GREENHECK SP-AP0511W
KEF-1	KITCHEN	CEILING MOUNTED	30	0.5	115V/1P	FHP	CONTINUOUS	10	GREENHECK SP-AP0511W

2

NOTES:
(1) PROVIDE BACKDRAFT DAMPERS ON EXHAUST FANS.
(2) 1.0 SONES MAXIMUM.
(3) VIBRATION ISOLATION: FANS < 125 LBS RUBBER ISOLATORS, FANS > 125 LBS SPRING ISOLATORS
(4) FAN SHALL BE 2-SPEED: 35 CFM CONTINUOUS LOW SETTING AND 80 CFM HIGH SPEED ACTIVATED BY INTEGRAL OCCUPANCY SENSOR ON GRILLE.

SPLIT SYSTEM HEAT PUMP SCHEDULE - INDOOR UNIT

EQUIP NO.	SERVICE	MOUNTING/ DISCHARGE	FAN AIRFLOW, CFM	FAN ESP, IN WG	ELECTRICAL VOLTAGE	ELECTRICAL MCA	ELECTRICAL MOCP	BASIS OF DESIGN (1)(2)(4)	CONNECTED OUTDOOR UNIT
FCU-1-X	RES. UNIT	HIGH WALL	473	N/A	(3)	(3)	(3)	DAIKIN FTXB12BXVJU	HP-1-X
FCU-2-X	RES. UNIT	HIGH WALL	716	N/A	(3)	(3)	(3)	DAIKIN FTXB18BXVJU	HP-2-X

NOTES:
(1) INSTALL IN ACCORDANCE WITH MANUFACTURER'S INSTALLATION REQUIREMENTS.
(2) PROVIDE MANUFACTURER'S OPTIONAL CONDENSATE PUMP WITH RESERVOIR AND SENSOR.
(3) INDOOR UNIT POWERED FROM OUTDOOR UNIT.
(4) "X" DENOTES THE UNIT BEING SERVED.

SPLIT SYSTEM HEAT PUMP SCHEDULE - OUTDOOR UNIT

EQUIP NO.	SERVICE	CAPACITY, TONS	TOTAL COOLING CAPACITY, BTUH	SEER2	TOTAL HEATING CAPACITY, BTUH	HSPF2	ELECTRICAL VOLTAGE	ELECTRICAL MCA	ELECTRICAL MOCP	WEIGHT, LBS	BASIS OF DESIGN (1)(2)(3)(4)(5)(6)	CONNECTED FAN COIL UNIT
HP-1-X	RES. UNIT	1.0	11,000	18.0	11,300	9.0	208V/1P	12.40	15	62	DAIKIN RXB12BXVJU	FCU-1
HP-2-X	RES. UNIT	1.5	18,000	18.0	17,900	8.5	208V/1P	16.55	20	97	DAIKIN RXB18BXVJU	FCU-1

NOTES:
(1) INSTALL IN ACCORDANCE WITH MANUFACTURER'S INSTALLATION REQUIREMENTS.
(2) ARI LISTED WITH ALL STANDARD FEATURES, INSTALLATION ACCESSORIES AND COMPRESSOR SHORT CYCLING PROTECTION. FILTER DRIVER, REFRIGERANT LINE FILTER, LIQUID SOLENOID VALVE, AND SAFETY PRESSURE SWITCHES. INSTALL REFRIGERANT TUBING AND LENGTH IN STRICT ACCORDANCE WITH MANUFACTURER'S RECOMMENDATIONS.
(3) NOT USED
(4) ROUTING OF REFRIGERANT LINES FROM INDOOR TO OUTDOOR UNITS NOT SHOWN ON PLANS. CONTRACTOR TO FIELD COORDINATE ROUTING.
(5) REFRIGERANT SHALL BE R-410A.
(6) "X" DENOTES THE UNIT BEING SERVED.

NO.	DATE	DESCRIPTION
2	5/2/25	PERMIT RESUBMITTAL #2
1	2/4/25	PERMIT RESUBMITTAL #1

REVISIONS

JOB J. OPITZ III
STATE OF WASHINGTON
REGISTERED PROFESSIONAL ENGINEER
05/01/2025

ROBISON ENGINEERING, INC
19401 40TH AVE W, SUITE 302
LYNNWOOD, WA 98036
206.364.3343
REI PROJECT NO.: 777-006
CONTACT: ARIK ESPINELI

DRAWN: OP
DESIGNED: ABE
CHECKED: ABE
APPROVED: JOB

PROJECT: BRADLEY HEIGHT APARTMENTS - BUILDING H
202 27TH AVE SE
PUYALLUP, WA 98374

ROBISON ENGINEERING, INC
19401 40TH AVE W, SUITE 302
LYNNWOOD, WA 98036
PHONE:(206)364.3343

PRMU20240279

DATE: 05/01/2025

SHEET TITLE: MECHANICAL SCHEDULES & WSEC FORMS

SHEET NO. M0.3

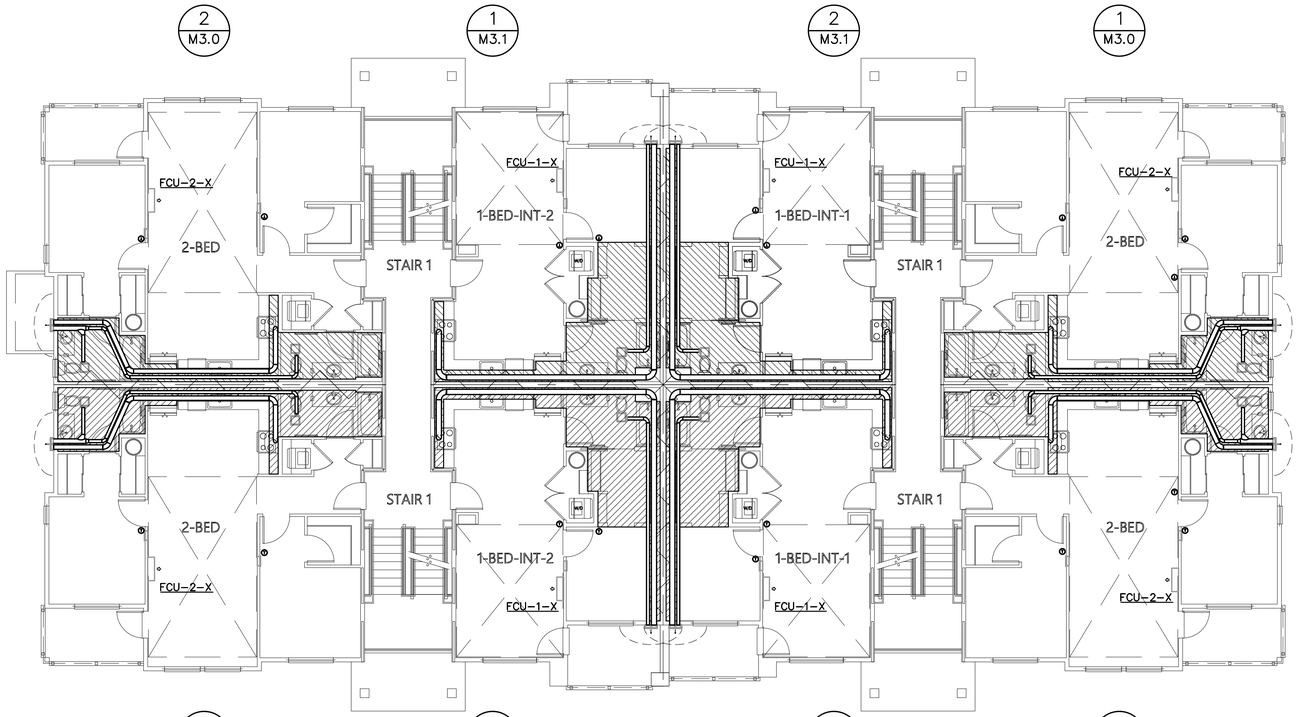

BUILDING H 2nd & 3rd LEVEL PLAN

1/8" = 1'-0" 3-STORY, 24-UNIT BUILDING

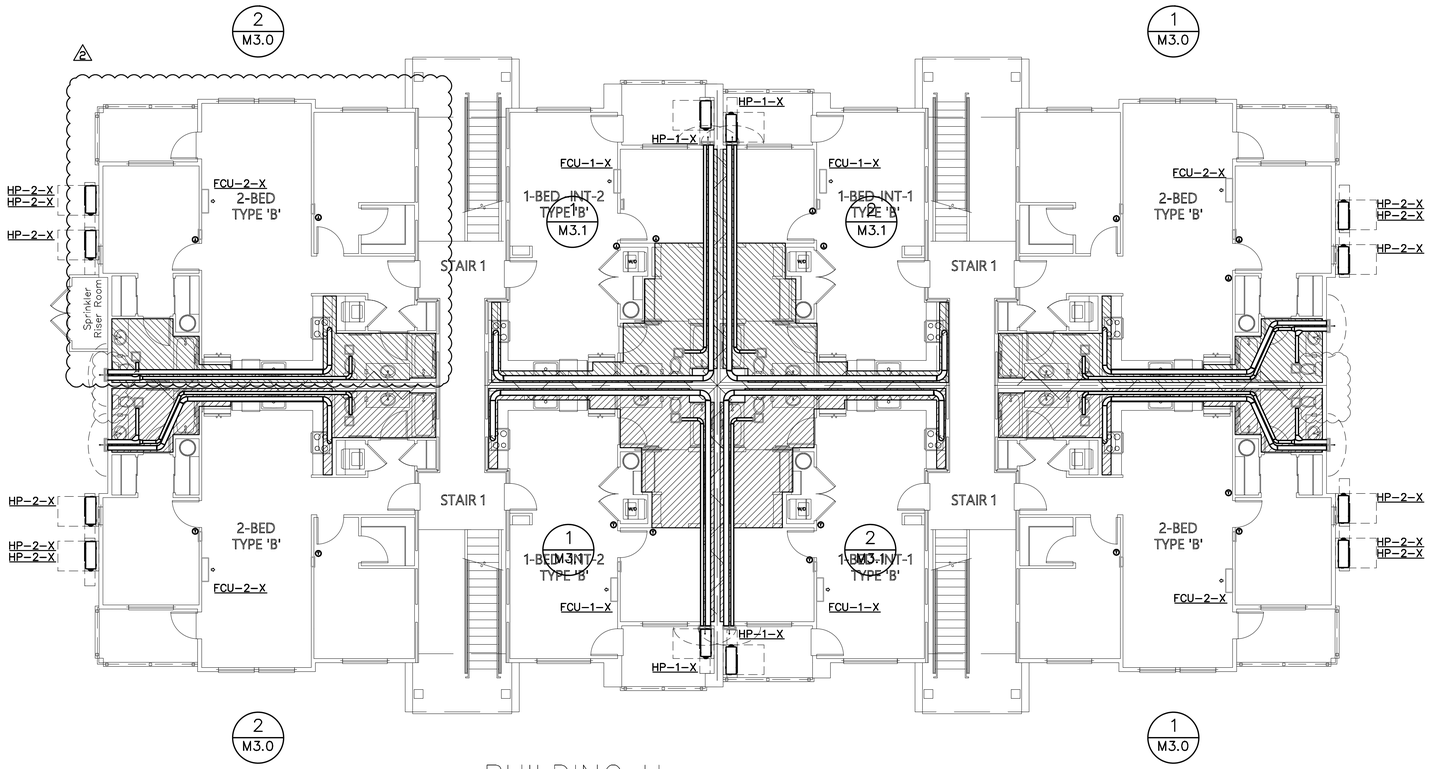

BUILDING H 1st LEVEL PLAN

1/8" = 1'-0" 3-STORY, 24-UNIT BUILDING

NO.	DATE	DESCRIPTION
2	5/2/25	PERMIT RESUBMITTAL #2
1	2/4/25	PERMIT RESUBMITTAL #1

REVISIONS

JACOB J. OBRIEN
STATE OF WASHINGTON
23001780
REGISTERED
PROFESSIONAL ENGINEER
05/01/2025

ROBISON ENGINEERING, INC
19401 40TH AVE W., SUITE 302
LYNNWOOD, WA 98036
206-364-3343 TEL
REI PROJECT NO.: 777006
CONTACT: ARIK ESPINELI

DRAWN: OP
DESIGNED: ABE
CHECKED: ABE
APPROVED: JOB

PROJECT: BRADLEY HEIGHT APARTMENTS - BUILDING H
202 27TH AVE SE
PUYALLUP, WA 98374

PRMU20240279

ROBISON ENGINEERING, INC
19401 40TH AVE W. SUITE 302
LYNNWOOD, WA 98036
PHONE:(206)364-3343

DATE: 05/01/2025

SHEET TITLE: HVAC PLAN - FLOOR PLANS

SHEET NO. M2.0

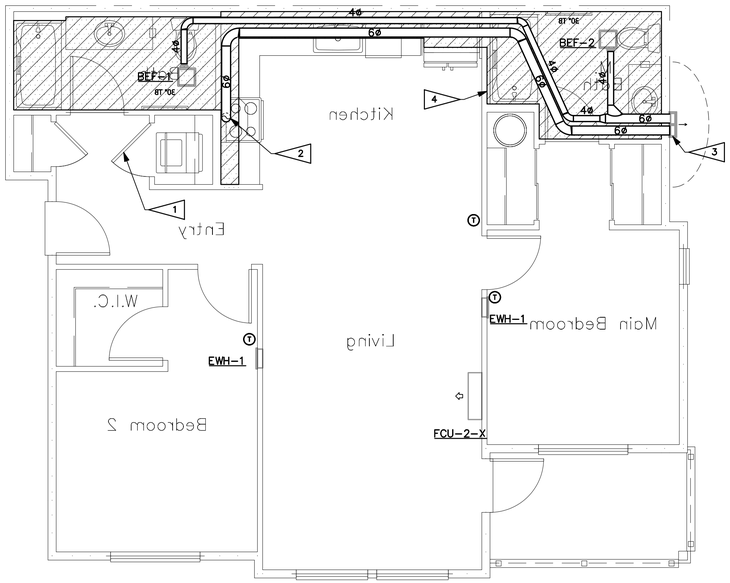

HVAC ENLARGED PLANS

2-BED MIRROR

SCALE: 1/4" = 1'-0"

1 / M3.0

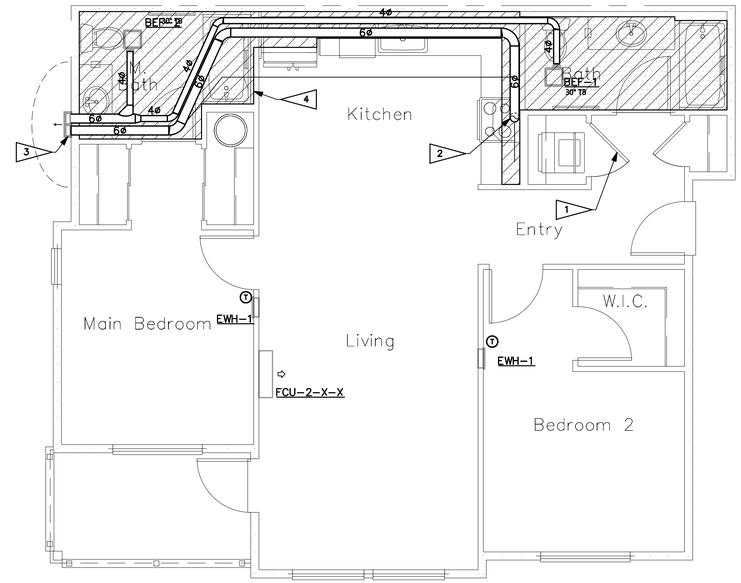

HVAC ENLARGED PLANS

2-BED

SCALE: 1/4" = 1'-0"

2 / M3.0

GENERAL NOTES:

1. ENVIRONMENTAL EXHAUST TERMINATIONS: MAINTAIN 3 FOOT SEPARATION FROM PROPERTY LINES AND OPERABLE OPENINGS INTO BUILDING, 10 FEET FROM MECHANICAL AIR INTAKES.
2. MOUNT REMOTE THERMOSTATS 48" AFF. PER WSEC C403.4.9, AT LEAST ONE THERMOSTAT SHALL BE PROGRAMMABLE ON A 5-2 SCHEDULE.
3. UNDERCUT ALL BATHROOM DOORS BY MINIMUM 1/2" TO ALLOW TRANSFER OF MAKEUP AIR FOR BATHROOM EXHAUST.
4. ELECTRIC WALL HEATERS SHALL BE RECESSED IN WALL UNLESS FIRE RATED OR EXTERIOR WALL. FOR HEATERS MOUNTED ON SUCH WALL, PROVIDE SURFACE-MOUNT WALL CAN.
5. PROVIDE ACCESSIBLE MANUAL VOLUME DAMPERS AT BRANCHES OR OPPOSED-BLADE DAMPERS AT GRILLES FOR AIR BALANCING PER VOLUME DAMPERS NOTE ON SHEET M0.00.

FLAG NOTES: #

1. CLOSETS CONTAINING DRYERS SHALL BE PROVIDED WITH LOUVERED DOOR OR 100 SQ. IN FREE-AREA OPENING ABOVE DOOR. OPENING PROVIDES PATH FOR EXHAUST AIR DURING WASHER OPERATION PER WSMC TABLE 403.3.1.1 NOTE (i) AND MAKEUP AIR DURING DRYER OPERATION PER 504.6.
2. POC TO DOMESTIC KITCHEN RANGE HOOD. SEE PLANS FOR SIZE. DUCT SHALL REMAIN SEPARATE FROM OTHER EXHAUST SYSTEMS UP TO TERMINATION.
3. DOMESTIC KITCHEN RANGE HOOD EXHAUST TERMINATION WALL CAP WITH SCREEN. PROVIDE BACKDRAFT DAMPER AT TERMINATION. CLEARANCES PER GENERAL NOTE 1.
4. LOWERED SOFFIT FOR MECHANICAL EQUIPMENT.

2

1

ENTIRE SHEET HAS BEEN UPDATED

NO.	DATE	DESCRIPTION
2	5/2/25	PERMIT RESUBMITTAL #2
1	2/4/25	PERMIT RESUBMITTAL #1

REVISIONS

JACOB J. OBRIEN
STATE OF WASHINGTON
REGISTERED PROFESSIONAL ENGINEER
05/01/2025

ROBISON ENGINEERING, INC
19401 40TH AVE W., SUITE 302
LYNNWOOD, WA 98036
206.364.3343 TEL
REI PROJECT NO.: 777006
CONTACT: ARK ESPINELI

DRAWN: OP
DESIGNED: ABE
CHECKED: ABE
APPROVED: JOB

PROJECT: BRADLEY HEIGHT APARTMENTS - BUILDING H
202 27TH AVE SE
PUYALLUP, WA 98374

ROBISON ENGINEERING, INC
19401 40TH AVE W. SUITE 302
LYNNWOOD, WA 98036
PHONE:(206)364-3343

PRMU20240279

DATE: 05/01/2025

SHEET TITLE: HVAC ENLARGED PLANS

SHEET NO. M3.0

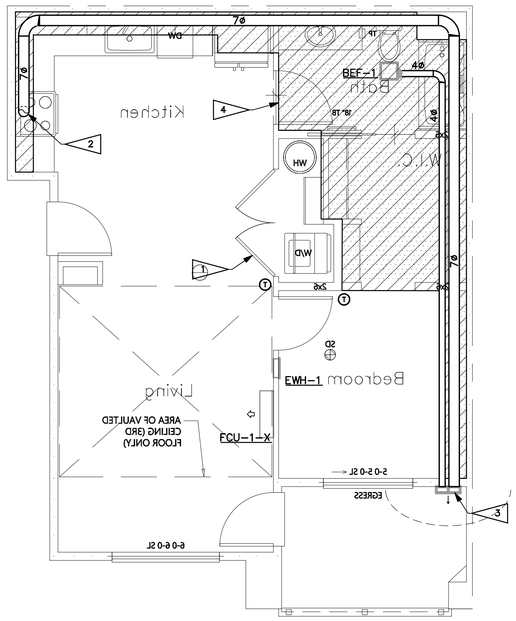

HVAC ENLARGED PLANS

1-BED-INT-2-MIRROR (1 / M3.1)

SCALE: 1/4" = 1'-0"

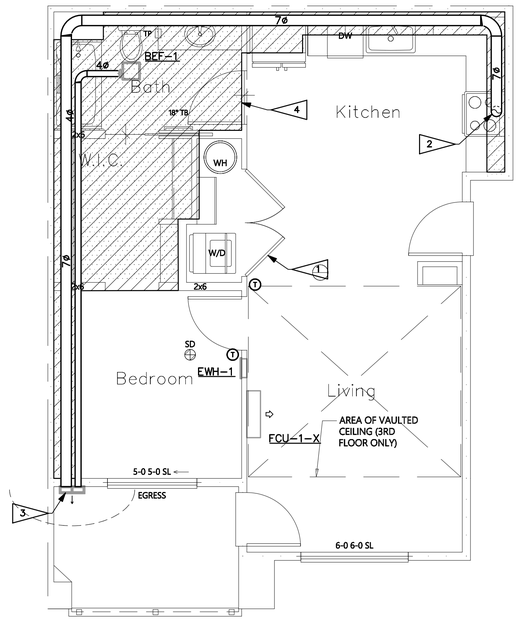

HVAC ENLARGED PLANS

1-BED-INT-2 (2 / M3.1)

SCALE: 1/4" = 1'-0"

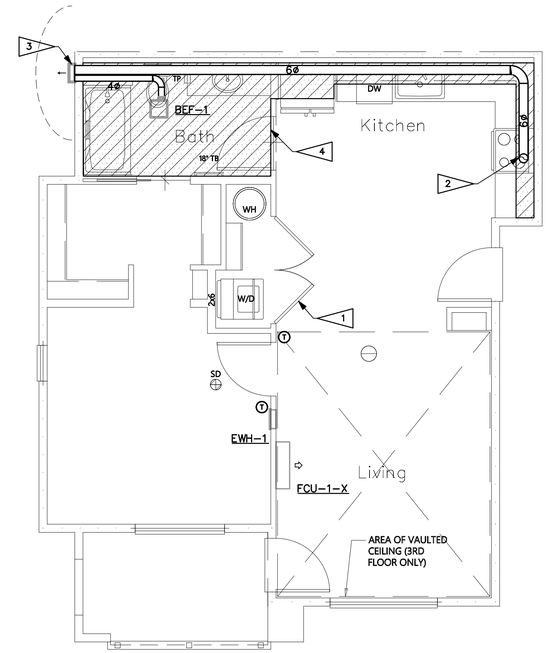

HVAC ENLARGED PLANS

1-BED-END (3 / M3.1)

SCALE: 1/4" = 1'-0"

GENERAL NOTES:

1. ENVIRONMENTAL EXHAUST TERMINATIONS: MAINTAIN 3 FOOT SEPARATION FROM PROPERTY LINES AND OPERABLE OPENINGS INTO BUILDING, 10 FEET FROM MECHANICAL AIR INTAKES.
2. MOUNT REMOTE THERMOSTATS 48" AFF. PER WSEC C403.4.9, AT LEAST ONE THERMOSTAT SHALL BE PROGRAMMABLE ON A 5-2 SCHEDULE.
3. UNDERCUT ALL BATHROOM DOORS BY MINIMUM 1/2" TO ALLOW TRANSFER OF MAKEUP AIR FOR BATHROOM EXHAUST.
4. ELECTRIC WALL HEATERS SHALL BE RECESSED IN WALL UNLESS FIRE RATED OR EXTERIOR WALL. FOR HEATERS MOUNTED ON SUCH WALL, PROVIDE SURFACE-MOUNT WALL CAN.
5. PROVIDE ACCESSIBLE MANUAL VOLUME DAMPERS AT BRANCHES OR OPPOSED-BLADE DAMPERS AT GRILLES FOR AIR BALANCING PER VOLUME DAMPERS NOTE ON SHEET M0.00.

FLAG NOTES: #

1. CLOSETS CONTAINING DRYERS SHALL BE PROVIDED WITH LOUVERED DOOR OR 100 SQ. IN FREE-AREA OPENING ABOVE DOOR. OPENING PROVIDES PATH FOR EXHAUST AIR DURING WASHER OPERATION PER WSMC TABLE 403.3.1.1 NOTE (i) AND MAKEUP AIR DURING DRYER OPERATION PER 504.6.
2. POC TO DOMESTIC KITCHEN RANGE HOOD. SEE PLANS FOR SIZE. DUCT SHALL REMAIN SEPARATE FROM OTHER EXHAUST SYSTEMS UP TO TERMINATION.
3. DOMESTIC KITCHEN RANGE HOOD EXHAUST TERMINATION WALL CAP WITH SCREEN. PROVIDE BACKDRAFT DAMPER AT TERMINATION. CLEARANCES PER GENERAL NOTE 1.
4. LOWERED SOFFIT FOR MECHANICAL EQUIPMENT.

2

1

ENTIRE SHEET HAS BEEN UPDATED

NO.	DATE	DESCRIPTION
2	5/2/25	PERMIT RESUBMITTAL #2
1	2/4/25	PERMIT RESUBMITTAL #1

REVISIONS

JACOB J. OBRIEN, STATE OF WASHINGTON, REGISTERED PROFESSIONAL ENGINEER, 05/01/2025

ROBISON ENGINEERING, INC
19401 40TH AVE W., SUITE 302
LYNNWOOD, WA 98036
206.364.3343 TEL
REI PROJECT NO.: 777-006
CONTACT: ARK ESPINELI

DRAWN: OP
DESIGNED: ABE
CHECKED: ABE
APPROVED: JOB

PROJECT: BRADLEY HEIGHT APARTMENTS - BUILDING H
202 27TH AVE SE
PUYALLUP, WA 98374

PRMU20240279

ROBISON ENGINEERING, INC
19401 40TH AVE W. SUITE 302
LYNNWOOD, WA 98036
PHONE:(206)364-3343

DATE: 05/01/2025

SHEET TITLE: HVAC ENLARGED PLANS

SHEET NO. M3.1

SYMBOLS

GENERAL

LIGHT LINE INDICATES NON–ELECTRICAL OR BACKGROUND (THIS IS NOT CONTRACTUAL DEFINITION OF WORK)

HEAVY LINE INDICATES NEW WORK (THIS IS NOT CONTRACTUAL DEFINITION OF WORK)

DETAIL IDENTIFICATION

SYMBOL	NAME
1	FLAG NOTE
	REVISION NOTE
	REVISION DEFINITION, AREA ENCIRCLED CONTAINS DRAWING CHANGES MADE SUBSEQUENT TO PREVIOUS ISSUE

SWITCHES

$a	SWITCH, SINGLE POLE; WITH SWITCHING SUBSCRIPT
$OS	OCCUPANCY SENSOR SWITCH
	SWITCH, SINGLE POLE; WITH SWITCHING SUBSCRIPT "D" INDICATES WALLBOX DIMMER
OS	CEILING MOUNTED OCCUPANCY SENSOR
$T	SWITCH, TIMER.
$3	SWITCH, THREE WAY.

RECEPTACLES

	SINGLE RECEPTACLE
	DUPLEX RECEPTACLE: WALL MOUNTED, +18" AFF
a	CONTROLLED AND NON CONTROLLED DUPLEX RECEPTACLE (SPLIT WIRED RECEPTACLE)
	DUPLEX RECEPTACLE – ABOVE COUNTER
GFCI	DUPLEX GFCI ABOVE COUNTER
GFCI	DUPLEX GFCI
+42"	DUPLEX RECEPTACLE, WITH HEIGHT ABOVE FINISHED FLOOR INDICATED
	CEILING MOUNTED DUPLEX RECEPTACLE
	DOUBLE DUPLEX RECEPTACLE: WALL MOUNTED, +18" AFF
	FLOOR BOX ONE DUPLEX RECEPTACLE
	FLOOR BOX ONE DUPLEX RECEPTACLE + ONE DATA
	FLOOR BOX ONE DUPLEX RECEPTACLE + ONE DATA + ONE VOICE
	SPECIAL PURPOSE RECEPTACLE, AS NOTED

MISCELLANEOUS

J	JUNCTION BOX: 4SQ MOUNTED JUNCTION BOX: 4SQ WALL MOUNTED JUNCTION BOX: 4SQ TRACK
L	CONNECTION FOR LIGHTED MIRROR COORDINATE LOCATION AND ELEVATION WITH ARCHITECT PRIOR TO ROUGH–IN
T	THERMOSTAT

SIGNAL/COMMUNICATION

	DATA OUTLET: WALL MOUNTED @ +18" AFF U.O.N.
	TELEPHONE/DATA OUTLET: WALL MOUNTED @ +18" AFF U.O.N.
TV	TELEVISION OUTLET: WALL MOUNTED @ +18" AFF U.O.N.

POWER

	PANELBOARD
WP	NON–FUSED DISCONNECT SWITCH (WP = NEMA 3R WHERE APPROPRIATE)
	FUSED DISCONNECT SWITCH
MAU–1,5HP,480,3	MOTOR CONNECTION (EQUIPMENT NAME, HORSEPOWER, VOLTAGE, AND PHASE INDICATED)
EF–1,12KVA,208,1	EQUIPMENT CONNECTION (EQUIPMENT NAME, LOAD, VOLTAGE, AND PHASE INDICATED)
T	TRANSFORMER, DRY TYPE, SHOWN TO SCALE
M	KW METER AND BASE

PART OF THE DESIGN/BUILD FIRE ALARM SYSTEM

FACP	FIRE ALARM SYSTEM CONTROL PANEL
P	FIRE ALARM SYSTEM PULL STATION
	FIRE ALARM SYSTEM STROBE/SPEAKER
SD	FIRE ALARM PHOTOELECTRIC SMOKE DETECTOR AND SPEAKER.
SD CO	FIRE ALARM COMBINATION PHOTOELECTRIC SMOKE DETECTOR, CARBON MONOXIDE DETECTOR, AND SPEAKER, GUESTROOM.
CO	CARBON MONOXIDE DETECTOR.
	ELECTRO–MAGNETIC DOOR HOLDER
DSD	DUCT SMOKE DETECTOR

ABBREVIATIONS

A	AMPERE
AC	ALTERNATING CURRENT, ABOVE COUNTER
AFF	ABOVE FINISHED FLOOR
AIC	AMPS INTERRUPTING CAPACITY
AL	ALUMINUM
AMP	AMPERE
AWG	AMERICAN WIRE GAUGE
BKR	BREAKER
BLDG	BUILDING
C	COIL or CONDUIT
CKT	CIRCUIT
CO	CONDUIT/RACEWAY ONLY
CT	CURRENT TRANSFORMER
Cu	COPPER
CW	COOL WHITE
D	DIMMER
DED	DEDICATED
EC	ELECTRICAL CONTRACTOR
EF	EXHAUST FAN
ELEC	ELECTRICAL
EMT	ELECTRICAL METALLIC TUBING
EQUIP	EQUIPMENT
EXIST	EXISTING
FAA	FIRE ALARM ANNUNCIATOR
FACP	FIRE ALARM CONTROL PANEL
FLUOR	FLUORESCENT
GC	GENERAL CONRACTOR
GFCI	GROUND FAULT CIRCUIT INTERRUPTER
GND	GROUND
GRS	GALVANIZED RIGID STEEL
HID	HIGH INTENSITY DISCHARGE
HP	HORSEPOWER
IG	ISOLATED GROUND
KCMIL	THOUSAND CIRCULAR MILLS
KVA	KILOVOLT AMPERES
KW	KILOWATT
LTG	LIGHTING
LV	LOW VOLTAGE
MFR	MANUFACTURER
MIN	MINIMUM
MLO	MAIN LUGS ONLY
N	NEUTRAL
NEC	NATIONAL ELECTRICAL CODE (NFPA–70)
NEMA	NATIONAL ELECTRICAL MANUFACTURERS ASSOCIATION
NTS	NOT TO SCALE
PNL	PANEL
POC	POINT OF CONNECTION
PT	POTENTIAL TRANSFORMER
PVC	POLYVINYL CLORIDE
PWR	POWER
QTY	QUANTITY
RECEPT	RECEPTACLE
REF	REFERENCE
RI	ROUGH–IN
RM	ROOM
RO	RACEWAY ONLY
SHT	SHEET
SPEC	SPECIFICATIONS
SW	SWITCH
SWBD	SWITCHBOARD
SWGR	SWITCHGEAR
TYP	TYPICAL
UG	UNDERGROUND
UL	UNDERWRITERS LABORATORIES
UON	UNLESS OTHERWISE NOTED
V	VOLTS
W	WATTS
WW	WARM WHITE
WP	WEATHERPROOF
W/	WITH
W/O	WITHOUT
XFMR	TRANSFORMER
XFR	TRANSFER
Z	IMPEDANCE OR ZONE

GENERAL NOTES

City of Puyallup Development & Permitting Services ISSUED PERMIT
Building | Planning
Engineering | Public Works
Fire | Traffic

GENERAL

1. PROVIDE ELECTRICAL INSTALLATION IN ACCORDANCE WITH THE GOVERNING ELECTRICAL CODE, LOCAL CODES, ORDINANCES AND REQUIREMENTS OF UTILITY COMPANIES FURNISHING SERVICES TO INSTALLATION.
2. PROVIDE ALL WORK AND ITEMS NECESSARY FOR COMPLETE AND FUNCTIONAL ELECTRICAL SYSTEMS. THE ELECTRICAL DRAWINGS ARE DIAGRAMMATIC AND DO NOT NECESSARILY SHOW EVERY CONDUIT, BOX, CONDUCTOR OR SIMILAR ITEMS FOR A COMPLETE INSTALLATION.
3. THE CONTRACTOR SHALL VISIT THE SITE PRIOR TO BID AND DETERMINE CONDITIONS WHICH MAY AFFECT BID. ANY ITEMS NOT FULLY UNDERSTOOD SHALL BE BROUGHT TO THE ATTENTION OF THE ARCHITECT PRIOR TO BIDDING.
4. "REF" INDICATIONS DENOTE WORK COVERED ELSEWHERE (ARCHITECTURAL, STRUCTURAL, OR MECHANICAL).
5. REFERENCE ARCHITECTURAL DRAWING FOR EXACT LOCATION OF DEVICES. QUESTIONS CONCERNING THE LOCATION OF DEVICES AND EQUIPMENT SHALL BE DIRECTED TO THE ARCHITECT. FAILURE TO COORDINATE REQUIREMENTS SHALL IN NO WAY RESULT IN ADDITIONAL COMPENSATION BEING PROVIDED TO THE CONTRACTOR.
6. WHEREVER THE WORD "PROVIDE" IS USED, IT MEANS, "FURNISH AND INSTALL COMPLETE AND READY FOR USE."
7. COORDINATE LOCATION OF ELECTRICAL WITH OTHER TRADES.
8. REFER TO EQUIPMENT DRAWINGS FOR MECHANICAL CHARACTERISTICS (SIZE, LOCATION, ETC.) OF MECHANICAL EQUIPMENT, UNLESS OTHERWISE INDICATED. COORDINATE INSTALLATION AND LOCATION OF ALL EQUIPMENT WITH MECHANICAL CONTRACTOR. VERIFY ALL FUSE RATINGS, WIRE SIZES AND DISCONNECT SIZES PRIOR TO INSTALLATION.

MATERIALS AND METHODS

1. PROVIDE RACEWAY AND WIRING ROUTED CONCEALED WITHIN BUILDING STRUCTURE WHERE POSSIBLE. WHERE RACEWAY CANNOT BE CONCEALED, IT SHALL BE INSTALLED PER PROJECT MANAGER'S DIRECTION. ALL CONDUIT SHALL BE INSTALLED IN NEAT SYMMETRICAL LINES HORIZONTAL OR PERPENDICULAR TO BUILDING COLUMNS AND ROOF LINES. CONDUITS SHALL BE GROUPED ON COMMON SUPPORTS WHEREVER POSSIBLE.
2. EXPOSED CONDUIT ROUTING: CONDUITS MAY BE ROUTED EXPOSED IN MECHANICAL AND ELECTRICAL ROOMS ONLY. EXPOSED CONDUITS SHALL BE SECURED A MINIMUM OF 6" ABOVE FLOOR.
3. OUTDOOR EXPOSED CONDUIT ROUTING: CONDUITS ROUTED ON ROOF OR EXPOSED TO WEATHER SHALL BE GRC, PVC OR LIQUID–TIGHT FLEX. PROVIDE WATER–TIGHT CONNECTIONS AND FITTINGS.
4. CLEARANCES: VERIFY PHYSICAL DIMENSIONS OF EQUIPMENT TO ENSURE THAT ACCESS CLEARANCES CAN BE MET.
5. CONNECTIONS: PROVIDE GRS, METALLIC FLEX, OR LIQUIDTITE FLEX CONDUITS FOR CONNECTIONS TO MOTORS OR MOTORIZED EQUIPMENT.
6. WIRING: PROVIDE MINIMUM #12 AWG WIRE SIZE. IF CONDUIT IS TO BE USED MINIMUM IS TO BE 1/2". FLEXIBLE CONDUIT AND FLEXIBLE CABLE IS PERMISSIBLE THROUGHOUT THE BUILDING.
7. WIRING: PROVIDE MINIMUM #10 AWG COPPER CONDUCTOR SIZE IN 120V BRANCH CIRCUIT RUNS OVER 75' IN LENGTH.

SITE ELECTRICAL

1. TRENCHING: COORDINATE ALL TRENCHING WORK WITH OTHER UTILITY LOCATIONS AND DRAINAGE TRENCHES.
2. UNDERGROUND CONDUITS: PROVIDE PVC, SCHEDULE 40, 3/4" MINIMUM. PROVIDE GRC CONDUIT TRANSITION ELBOW WHEN TURNING UP TO ABOVE GRADE.
3. DIRECT–BURIED CONDUITS: CONDUIT FOR BRANCH CIRCUITS OUTSIDE BUILDINGS NOT BENEATH DRIVEWAYS OR PARKING AREAS SHALL BE DIRECTLY BURIED WITHOUT CONCRETE ENCASEMENT. THE DEPTH TO THE TOP OF BURIED CONDUITS SHALL BE 36". PROVIDE MARKER TAPE 12" BELOW GRADE.
4. BELOW SLAB: CONDUIT ROUTED BELOW ON–GRADE FLOOR SLABS SHALL BE INSTALLED PRIOR TO FLOOR SLAB POUR. ROUTE CONDUITS BELOW SLAB AS STRAIGHT AS POSSIBLE TO MINIMIZE BENDS.
5. ALL CONDUITS PENETRATING THE BUILDING ENVELOPE BELOW GRADE SHALL FOLLOW WATERPROOFING REQUIREMENTS IN THE ARCHITECTURAL DRAWINGS.

NEUTRALS

1. AT CONTRACTORS OPTION, NEUTRALS MAY BE SHARED ON COMBINED HOMERUNS UNLESS THE CIRCUIT HAS A GFCI BREAKER, AN ISOLATED GROUND, OR IS FROM A PANEL WITH TVSS PROTECTION. ANY NEUTRAL DOWNSTREAM FROM A DIMMER SHALL BE DEDICATED TO THE DIMMED LOAD.
2. NEUTRAL WIRES SHOWN FOR TWO AND THREE POLE MECHANICAL AND KITCHEN EQUIPMENT MAY BE OMITTED UPON VERIFICATION THAT THEY ARE NOT REQUIRED EITHER FOR OPERATION OR CONTROL CIRCUITS PER MANUFACTURER'S SPECIFICATIONS.

LIGHTING

1. PROVIDE LIGHT FIXTURES WITH PROPER FITTING FLANGES, MOUNTING SUPPORTS, AND ACCESSORY ITEMS, UL LISTED FOR CONDITIONS OF USE.

LOW VOLTAGE LIGHTING

1. PROVIDE LOW VOLTAGE TRANSFORMERS IN NEARBY ACCESSIBLE CEILING SPACE.
2. PROVIDE LOW VOLTAGE CONDUCTORS SIZED PER MANUFACTURER'S GUIDELINES TO MINIMIZE VOLTAGE DROP.

LIGHTING CONTROL

1. THE MAXIMUM LIGHTING POWER THAT MAY BE CONTROLLED FROM A SINGLE SWITCH OR AUTOMATIC CONTROL SHALL NOT EXCEED THAT WHICH IS PROVIDED BY A TWENTY AMPERE CIRCUIT LOADED TO NOT MORE THAN EIGHTY PERCENT. A MASTER CONTROL MAY BE INSTALLED PROVIDED THE INDIVIDUAL SWITCHES RETAIN THEIR CAPABILITY TO FUNCTION INDEPENDENTLY.
2. EMERGENCY FIXTURES: EMERGENCY BATTERY/CHARGER SHALL BE CONNECTED TO AN UNSWITCHED LEG OF THE DESIGNATED CIRCUIT.

GENERAL REQUIREMENTS

1. DRAWINGS ARE DIAGRAMMATIC, SHOWING THE GENERAL LOCATION, TYPE, LAYOUT, AND EQUIPMENT REQUIRED.
2. THE DRAWINGS SHALL NOT BE SCALED FOR EXACT MEASUREMENT.
3. REFER TO ARCHITECTURAL DRAWINGS FOR DIMENSIONS.
4. REFER TO MANUFACTURER'S STANDARD INSTALLATION DRAWINGS FOR EQUIPMENT CONNECTIONS AND INSTALLATION REQUIREMENTS.
5. PROVIDE CONNECTIONS, ACCESSORIES, OFFSETS, AND MATERIALS NECESSARY FOR A COMPLETE SYSTEM.

CONTRACTOR SUBSTITUTIONS & REVISIONS

1. PLEASE SUBMIT PROPOSALS FOR SUBSTITUTIONS OR REVISIONS FOR REVIEW AND APPROVAL PRIOR TO ORDERING MATERIAL OR DOING WORK.
2. FOR EQUIPMENT THAT IS SCHEDULED BY MANUFACTURER'S NAME AND CATALOG DESIGNATIONS, THE MANUFACTURER'S PUBLISHED DATA AND/OR SPECIFICATION FOR THAT ITEM ARE CONSIDERED PART OF SPECIFICATION.
3. ENGINEERING COSTS FOR REVISING MEP PLANS SHALL BE ADDRESSED IN THE COST ANALYSIS OF THE SUBSTITUTION PROPOSAL.
4. CONTRACTOR TO COORDINATE WITH ENGINEER AND DETERMINE ASSOCIATED DESIGN AND PERMITTING COSTS. CONTRACTOR SHALL BE RESPONSIBLE FOR OTHER COSTS ASSOCIATED WITH UNFORESEEN ISSUES RESULTING FROM SUBSTITUTIONS OR REVISIONS.

PRE-CON MEETING NOTES

CONTRACTORS SHALL ATTEND A PRE–CONSTRUCTION MEETING WITH THE ENGINEER FOR THE PURPOSE OF REVIEWING THE WORK PRIOR TO ORDERING ANY EQUIPMENT OR PERFORMING ANY WORK. THE MEETING SHALL BE LOCATED AT THE PROJECT SITE ON A DATE AND TIME TO BE MUTUALLY AGREED. THE MEETING WILL BE A WORKING SESSION. THE MEETING WILL BE FACILITATED BY THE ENGINEER AND THE AGENDA WILL INCLUDE A DETAILED REVIEW OF THE PLANS AND SPECIFICATIONS, CROSS CHECK WITH OTHER TRADES FOR COORDINATION ISSUES, REVIEW OF PROPOSED PRODUCTS, REVIEW OF PLANNED MEANS AND METHODS,AND ON–SITE INVESTIGATION OF FIELD CONDITIONS RELATIVE TO EXISTING CONDITIONS THAT COULD AFFECT THE WORK. PERSONS ATTENDING THE MEETING SHALL BE KNOWLEDGEABLE OF THE PROJECT AND SHALL BE THE SPECIFIC PERSONS INTENDED TO CONTINUE WITH THE PROJECT THROUGH TO COMPLETION. IF REQUIRED, REVISED PLANS WILL BE ISSUED THROUGH OFFICIAL CHANNELS. CHANGES IN THE BID PRICE WILL BE DISCUSSED, BUT NO CHANGE ORDERS WILL BE ISSUED UNLESS PROCESSED THOUGH OFFICIAL CHANNELS. IT SHALL BE UNDERSTOOD THAT THE ENGINEER HAS NO AUTHORITY TO ISSUE CHANGE ORDERS.

THE FOLLOWING TRADES SHALL BE REPRESENTED FOR THE MINIMUM TIME INDICATED:

MECHANICAL SHEET METAL	4 HOURS
PLUMBING/PIPING	4 HOURS
ELECTRICAL	4 HOURS
SPRINKLER	2 HOURS
GENERAL CONTRACTOR	ALL SESSIONS

DRAWING INDEX

		INCLUDED IN SET								
DWG	DESCRIPTION	PERMIT REVIEW SET 10/06/23	PERMIT SET 02/15/24	PROGRESS SET 08/16/2024	OWNER CHANGES/PERMIT CORRECTIONS 08/30/24	CHANGES/PERMIT CORRECTIONS 05/01/25				
E0.00	LEGEND, GENERAL NOTES, DRAWING INDEX	X	X	X	X	X				
E0.01	PROJECT NOTES	X	X	X	X	X				
E0.10	SITE POWER PLAN – EAST	X	X	X	X	X				
E0.11	SITE POWER PLAN – WEST					X				
E0.12	SITE LIGHTING PLAN – EAST	X	X	X	X	X				
E0.13	SITE LIGHTING PLAN – WEST					X				
E1.00	LIGHTING & PHOTOMETRIC PLAN–BASEMENT	X	X	X	X	X				
E1.01	LIGHTING & PHOTOMETRIC PLAN–1ST FLOOR	X	X	X	X	X				
E1.02	LIGHTING PLAN – 2ND & 3RD FLOOR	X	X	X	X	X				
E1.50	LIGHTING NOTES & LUMINAIRE SCHEDULES	X	X	X	X	X				
E3.00	POWER PLAN – BASEMENT & 1ST FLOOR	X	X	X	X	X				
E3.01	POWER PLAN – 2ND & 3RD FLOOR	X	X	X	X	X				
E5.00	UNIT PLANS NOTES	X	X	X	X	X				
E5.01	UNIT PLANS & SCHEDULES	X	X	X	X	X				
E5.02	UNIT PLANS & SCHEDULES	X	X	X	X	X				
E6.00	ONE–LINE DIAGRAM & NOTES	X	X	X	X	X				
E6.01	PANELS SCHEDULES	X	X	X	X	X				

Separate Electrical Permit is required with the Washington State Department of Labor & Industries.

https://lni.wa.gov/licensing-permits/electrical/electrical-permits-fees-and-inspections

or call for Licensing Information: 1-800-647-0982

NO.	DATE	DESCRIPTION
2	5/2/25	CHANGES/PERMIT CORRECTION SET

REVISIONS

MARK STEINKE, STATE OF WASHINGTON, REGISTERED PROFESSIONAL ENGINEER
05/02/2025

ROBISON ENGINEERING, INC
19401 40TH AVE W., SUITE 302
LYNNWOOD, WA 98036
206-364-3343 TEL
REI PROJECT NO.: 1219-001
CONTACT: ARIK ESPINELI

DRAWN: KL
DESIGNED: MHS
CHECKED: PSR
APPROVED: JAY

PROJECT: BRADLEY HEIGHTS APARTMENTS BUILDING H
27TH AVE SE AND 5TH ST SE PUYALLUP, WA

PRMU20240279

ROBISON ENGINEERING, INC
19401 40TH AVE W. SUITE 302
LYNNWOOD, WA 98036
PHONE:(206)364-3343

DATE: 05/02/2025

SHEET TITLE: LEGEND, GENERAL NOTES, DRAWING INDEX

SHEET NO. E0.00

APPLICABLE CODES

THE FOLLOWING PROJECT DESIGN IS BASED ON THE FOLLOWING CODES:

- 2020 NATIONAL ELECTRICAL CODE (NEC)
- 2018 WASHINGTON STATE ENERGY CODE (WSEC)
- 2018 INTERNATIONAL BUILDING CODE (IBC) & WASHINGTON STATE AMENDMENTS
- 2018 INTERNATIONAL FIRE CODE (IFC) & WASHINGTON STATE AMENDMENTS
- 2018 INTERNATIONAL MECHANICAL CODE (IMC) & WASHINGTON STATE AMENDMENTS
- 2018 UNIFORM PLUMBING CODE (UPC) & WASHINGTON STATE AMENDMENTS

VIBRATION AND ACOUSTICAL ISOLATION

THE FOLLOWING MEASURES SHALL BE TAKEN TO MINIMIZE VIBRATION AND NOISE TRANSMISSION FROM MECHANICAL AND ELECTRICAL EQUIPMENT TO THE INTERIOR SPACES:

TRANSFORMERS:

A) PROVIDE FLEXIBLE CONDUIT OR MC CABLE AT EQUIPMENT CONNECTION.
B) MOUNT TRANSFORMERS ON NEOPRENE GROMMET ISOLATORS.

SUBDUCT EXHAUST FANS:

A) PROVIDE FLEXIBLE CONDUIT OR MC CABLE AT EQUIPMENT CONNECTION.

ENCLOSED GARAGE EXHAUST FANS:

A) PROVIDE FLEXIBLE CONDUIT OR MC CABLE AT EQUIPMENT CONNECTION.

ROOFTOP AIR HANDLERS:

A) PROVIDE FLEXIBLE CONDUIT OR MC CABLE AT EQUIPMENT CONNECTION.

FAN COIL UNITS:

A) PROVIDE FLEXIBLE CONDUIT OR MC CABLE AT EQUIPMENT CONNECTION.

ROOF MOUNTED CONDENSERS:

A) PROVIDE FLEXIBLE CONDUIT OR MC CABLE AT EQUIPMENT CONNECTION.

FLEXIBLE CONDUIT OR MC CABLE CONNECTIONS FOR VIBRATION ISOLATION SHALL BE A MINIMUM OF TWO FEET LONG.

TEMPERATURE LIMITATION OF CONDUCTORS

ADDITIONAL ADJUSTMENTS FOR CONDUITS EXPOSED TO SUNLIGHT ON OR ABOVE ROOFTOPS SHALL BE FACTORED PER NEC TABLE 310.15(B)(2)(C)

CONDUIT & CONDUCTOR FIRE RATING

1. CONDUIT FOR ELECTRICAL CONDUCTORS BY THE FACP OR FIRE ALARM SYSTEM SHALL BE IN 2 HOUR RATED ENCLOSURES OR ENCASED IN 2-INCH OF CONCRETE AND RATED CABLE ASSEMBLIES, OR BE CONDUCTORS IN 2 HOUR-RATED RACEWAYS PER NFPA 72.
2. THE EQUIPMENT AND CONTROL WIRING SHALL BE ENCLOSED BY FIRE BARRIERS CONSTRUCTED IN ACCORDANCE WITH IBC SECTION 707 OR HORIZONTAL ASSEMBLIES CONSTRUCTED IN ACCORDANCE WITH IBC SECTION 711, OR USING A 2 HR RATED CABLE SYSTEM OR ENCLOSED WITHIN 2" OF CONCRETE.
3. FIRE ALARM WIRING SHALL COMPLY WITH IBC 907.6.1. WIRING SHALL COMPLY WITH THE REQUIREMENTS OF NFPA 70.
4. RACEWAYS FOR THE DEDICATED BRANCH CIRCUIT(S) REQUIRED FOR PRIMARY POWER TO THE FIRE ALARM CONTROL PANEL (FACP) SHALL BE IN 2 HOUR RATED ENCLOSURES OR ENCASED IN 2-INCH OF CONCRETE AND RATED CABLE ASSEMBLIES, OR BE CONDUCTORS IN 2 HOUR-RATED RACEWAYS PER IBC 907 AND NFPA 72 SECTION 10.6.11.3.1.3

NO.	DATE	DESCRIPTION
2	5/2/25	CHANGES/PERMIT CORRECTION SET

REVISIONS

MARK STEINKE
STATE OF WASHINGTON
REGISTERED PROFESSIONAL ENGINEER
05/02/2025

ROBISON ENGINEERING, INC
19401 40TH AVE W, SUITE 302
LYNNWOOD, WA 98036
206.364.3343 tel
REI PROJECT NO.: 1219-001
CONTACT: MIKE KERNELL

DRAWN: KL
DESIGNED: MHS
CHECKED: PSR
APPROVED: JAY

PROJECT: BRADLEY HEIGHTS APARTMENTS BUILDING H
27TH AVE SE AND 5TH ST SE PUYALLUP, WA

ROBISON ENGINEERING, INC
19401 40TH AVE W, SUITE 302
LYNNWOOD, WA 98036
PHONE:(206)364-3343

PRMU20240279

DATE: 05/02/2025

SHEET TITLE: LEGEND, GENERAL NOTES, DRAWING INDEX

SHEET NO. E0.01

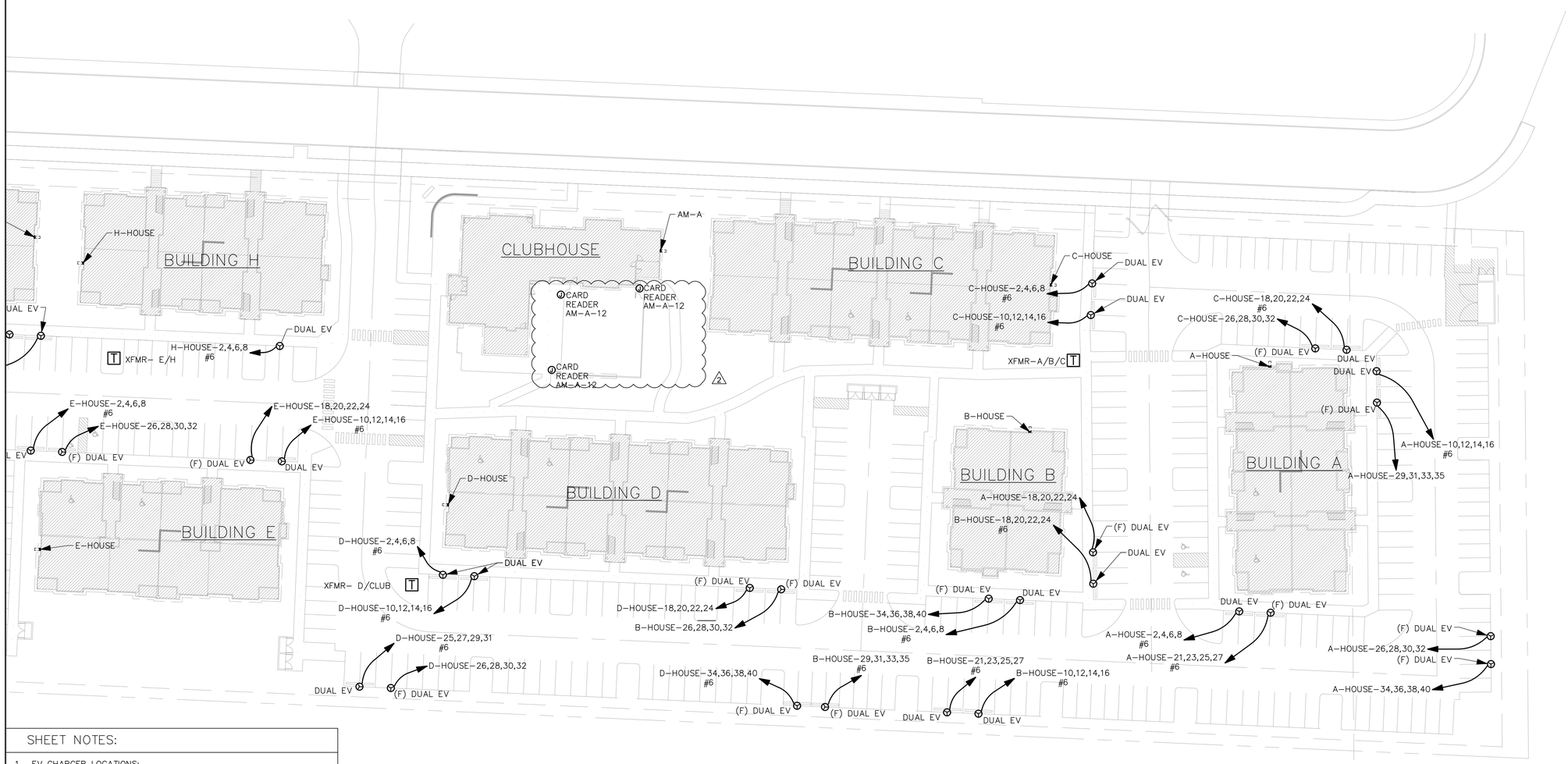

SHEET NOTES:

1. EV CHARGER LOCATIONS:
   - 1.1. PROVIDE PRE-FABRICATED EV CHARGING STATION. BOD: PULSAR 40A DUAL EV CHARGERS. PROVIDE (2) 50A CIRCUITS TO EACH DUAL CHARGER.
   - 1.2. FOUNDATION TO INCLUDE ACCESSIBLE UNDERGROUND PULLBOX, CONDUIT ENTRY PORTS AND COVERPLATE DESIGNED FOR DIRECT-MOUNTING EV CHARGER PEDESTAL.
   - 1.3. PROVIDE FOUNDATION PRODUCTS BY BREEZE-EV, EV-BLOCKS OR EQUIVALENT.
   - 1.4. IF FOUNDATION IS INSTALLED LASS THAN 2'-0" FROM THE EDGE OF THE CURB, THEN PROIDE A BOLLARD AT EACH CORNER OF THE FOUNDATION THAT COMPLIES WITH 2018 IBC 1607.9
2. (F) DUAL EV CHARGING STATIONS:
   PROVIDE 1-1/4" CONDUIT WITH PULL WIRE FROM EV PANEL(S) IN ELECTRICAL ROOM AS INDICATED.
3. DUAL EV CHARGING STATIONS:
   PROVIDE AND INSTALL 1-1/4" CONDUIT, CONDUCTORS, AND REQUIRED BREAKERS FOR DUAL EV CHARGING STATIONS.

SITE POWER PLAN – EAST

SCALE: 1/32" = 1'-0"

COPYRIGHT 2023, ROBISON ENGINEERING, INC.
KLYSAK F:\777-006 DHI MEADOWDALE APARTMENTS\DWG\FLAT E0.10 SITE PLAN.DWG 05-09-2023 10:47

NO.	DATE	DESCRIPTION
2	5/2/25	CHANGES/PERMIT CORRECTION SET

REVISIONS

ARK STEINKE
STATE OF WASHINGTON
REGISTERED PROFESSIONAL ENGINEER
05/02/2025

ROBISON ENGINEERING, INC
19401 40TH AVE W., SUITE 302
LYNNWOOD, WA 98036
206.364.3343 TEL
REI PROJECT NO.: 1219-001
CONTACT: ARK.STEINKE

DRAWN: KL
DESIGNED: MHS
CHECKED: PSR
APPROVED: JAY

PROJECT: BRADLEY HEIGHTS APARTMENTS BUILDING H
27TH AVE SE AND 5TH ST SE PUYALLUP, WA

PRMU20240279

ROBISON ENGINEERING, INC
19401 40TH AVE W. SUITE 302
LYNNWOOD, WA 98036
PHONE:(206)364-3343

DATE: 05/02/2025

SHEET TITLE: SITE POWER - EAST SITE PLAN

SHEET NO. E0.10

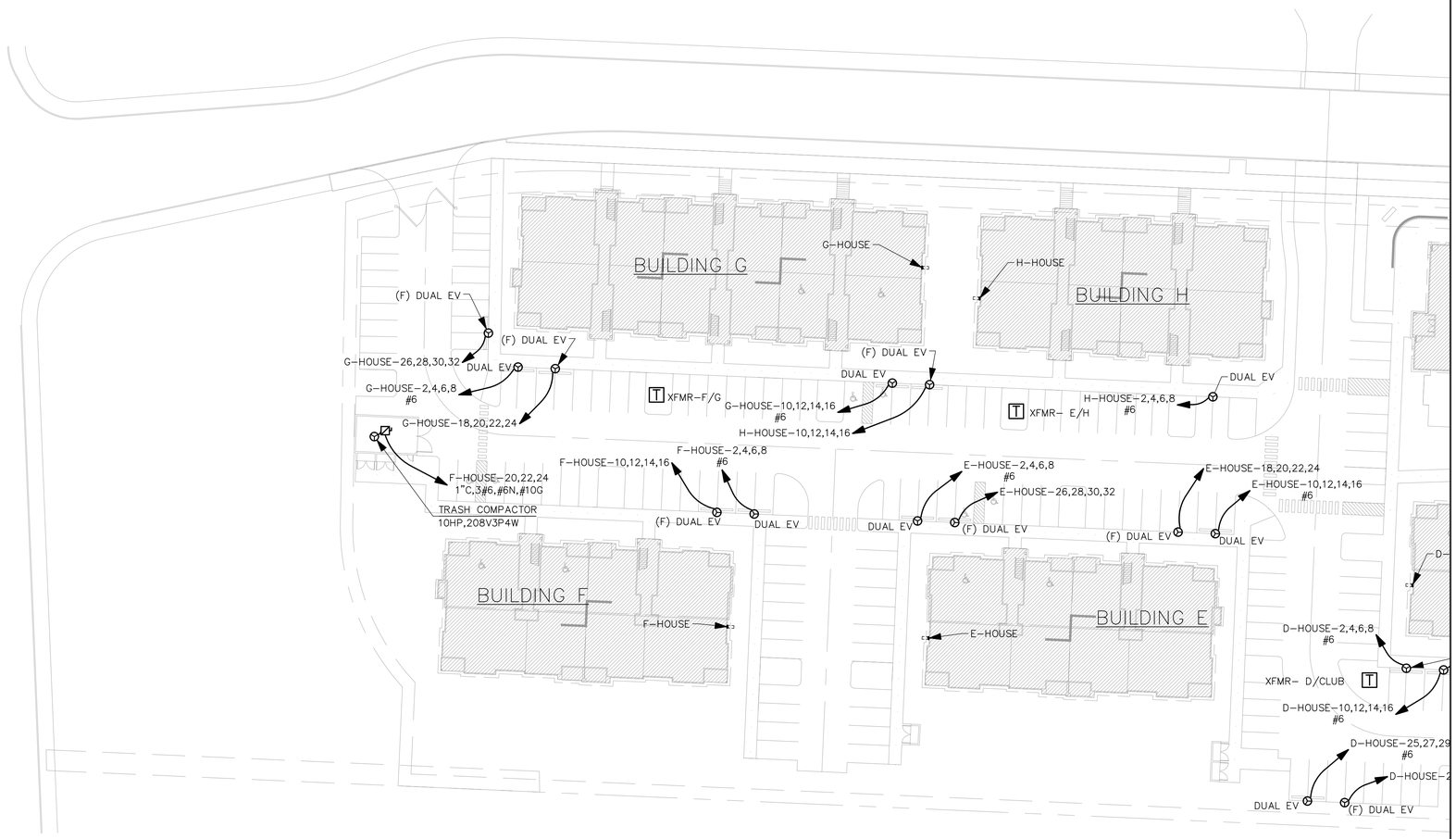

SITE POWER PLAN – WEST

SCALE: 1/32" = 1'-0"

SHEET NOTES:

1. EV CHARGER LOCATIONS:
   - 1.1. PROVIDE PRE-FABRICATED EV CHARGING STATION. BOD: PULSAR 40A DUAL EV CHARGERS. PROVIDE (2) 50A CIRCUITS TO EACH DUAL CHARGER.
   - 1.2. FOUNDATION TO INCLUDE ACCESSIBLE UNDERGROUND PULLBOX, CONDUIT ENTRY PORTS AND COVERPLATE DESIGNED FOR DIRECT-MOUNTING EV CHARGER PEDESTAL.
   - 1.3. PROVIDE FOUNDATION PRODUCTS BY BREEZE-EV, EV-BLOCKS OR EQUIVALENT.
   - 1.4. IF FOUNDATION IS INSTALLED LASS THAN 2'-0" FROM THE EDGE OF THE CURB, THEN PROIDE A BOLLARD AT EACH CORNER OF THE FOUNDATION THAT COMPLIES WITH 2018 IBC 1607.9
2. (F) DUAL EV CHARGING STATIONS:
   PROVIDE 1-1/4" CONDUIT WITH PULL WIRE FROM EV PANEL(S) IN ELECTRICAL ROOM AS INDICATED.
3. DUAL EV CHARGING STATIONS:
   PROVIDE AND INSTALL 1-1/4" CONDUIT, CONDUCTORS, AND REQUIRED BREAKERS FOR DUAL EV CHARGING STATIONS.

NO.	DATE	DESCRIPTION
2	5/2/25	CHANGES/PERMIT CORRECTION SET

REVISIONS

MARK STEINKE
STATE OF WASHINGTON
REGISTERED PROFESSIONAL ENGINEER
05/02/2025

ROBISON ENGINEERING, INC
19401 40TH AVE W, SUITE 302
LYNNWOOD, WA 98036
PHONE:(206)364-3343
REI PROJECT NO.: 1219-001
CONTACT: MIKE KERNELL

DRAWN: KL
DESIGNED: MHS
CHECKED: PSR
APPROVED: JAY

PROJECT: BRADLEY HEIGHTS APARTMENTS BUILDING H
27TH AVE SE AND 5TH ST SE PUYALLUP, WA

PRMU20240279

ROBISON ENGINEERING, INC
19401 40TH AVE W, SUITE 302
LYNNWOOD, WA 98036
PHONE:(206)364-3343

DATE: 05/02/2025

SHEET TITLE: SITE POWER - WEST SITE PLAN

SHEET NO. E0.11

COPYRIGHT 2023, ROBISON ENGINEERING, INC.
KLYSAK F:\777-006 DH MEADOWDALE APARTMENTS\DWG\FLAT E0.10 SITE PLAN.DWG 05-09-2023 10:47

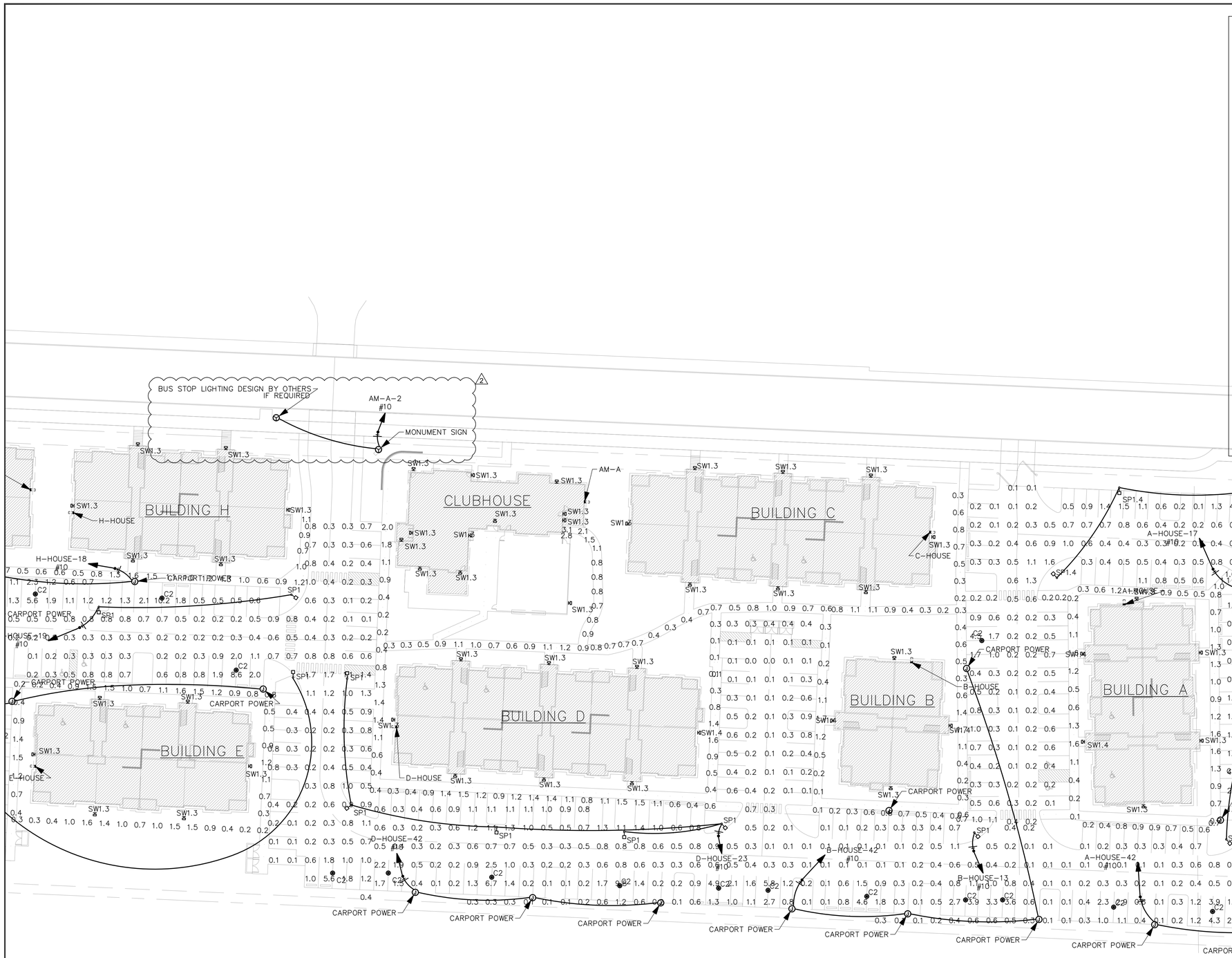

SITE LIGHTING PLAN – EAST

SCALE: 1/32" = 1'-0"

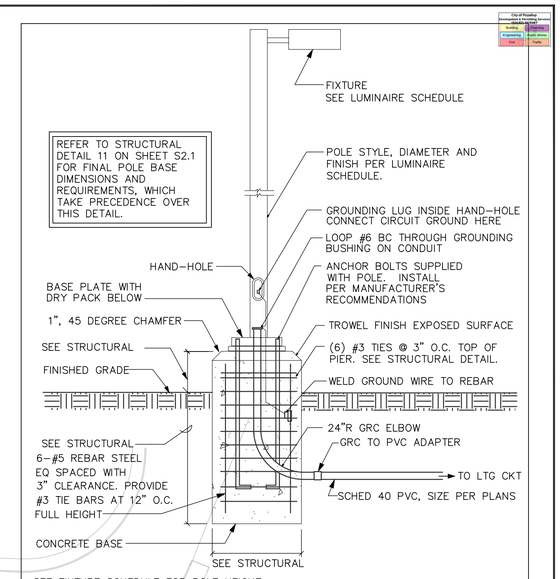

SITE LIGHTING POLE BASE

SCALE: NONE

NO.	DATE	DESCRIPTION
2	5/2/25	CHANGES/PERMIT CORRECTION SET

REVISIONS

MARK STEINKE
STATE OF WASHINGTON
REGISTERED PROFESSIONAL ENGINEER
05/02/2025

ROBISON ENGINEERING, INC
19401 40TH AVE W, SUITE 302
LYNNWOOD, WA 98036
206.364.3343 tel.
REI PROJECT NO.: 1219-001
CONTACT: ARK.ESPINELI

DRAWN: KL
DESIGNED: MHS
CHECKED: PSR
APPROVED: JAY

PROJECT: BRADLEY HEIGHTS APARTMENTS BUILDING H
27TH AVE SE AND 5TH ST SE PUYALLUP, WA

PRMU20240279

ROBISON ENGINEERING, INC
19401 40TH AVE W, SUITE 302
LYNNWOOD, WA 98036
PHONE:(206)364-3343

DATE: 05/02/2025

SHEET TITLE: SITE LIGHTING - EAST SITE PLAN

SHEET NO. E0.12

COPYRIGHT 2023, ROBISON ENGINEERING, INC.
KLYSAK F:\777-006 DHI MEADOWDALE APARTMENTS\DWG\FLAT E0.10 SITE PLAN.DWG 05-09-2023 10:47

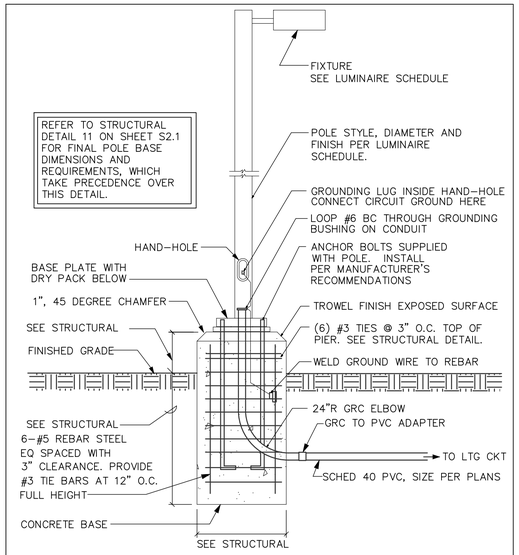

SEE FIXTURE SCHEDULE FOR POLE HEIGHT

SITE LIGHTING POLE BASE

SCALE: NONE

Drive Aisle Photometric Schedule	
AVERAGE FOOT-CANDLES	0.74
MAXIMUM FOOT-CANDLES	10.5
MINIMUM FOOT-CANDLES	0.0
MAXIMUM TO MINIMUM FC RATIO	912.07
AVERAGE TO MINIMUM FC RATIO	64.31

Walkway Photometric Schedule	
AVERAGE FOOT-CANDLES	0.82
MAXIMUM FOOT-CANDLES	3.1
MINIMUM FOOT-CANDLES	0.1
MAXIMUM TO MINIMUM FC RATIO	41.68
AVERAGE TO MINIMUM FC RATIO	11.02

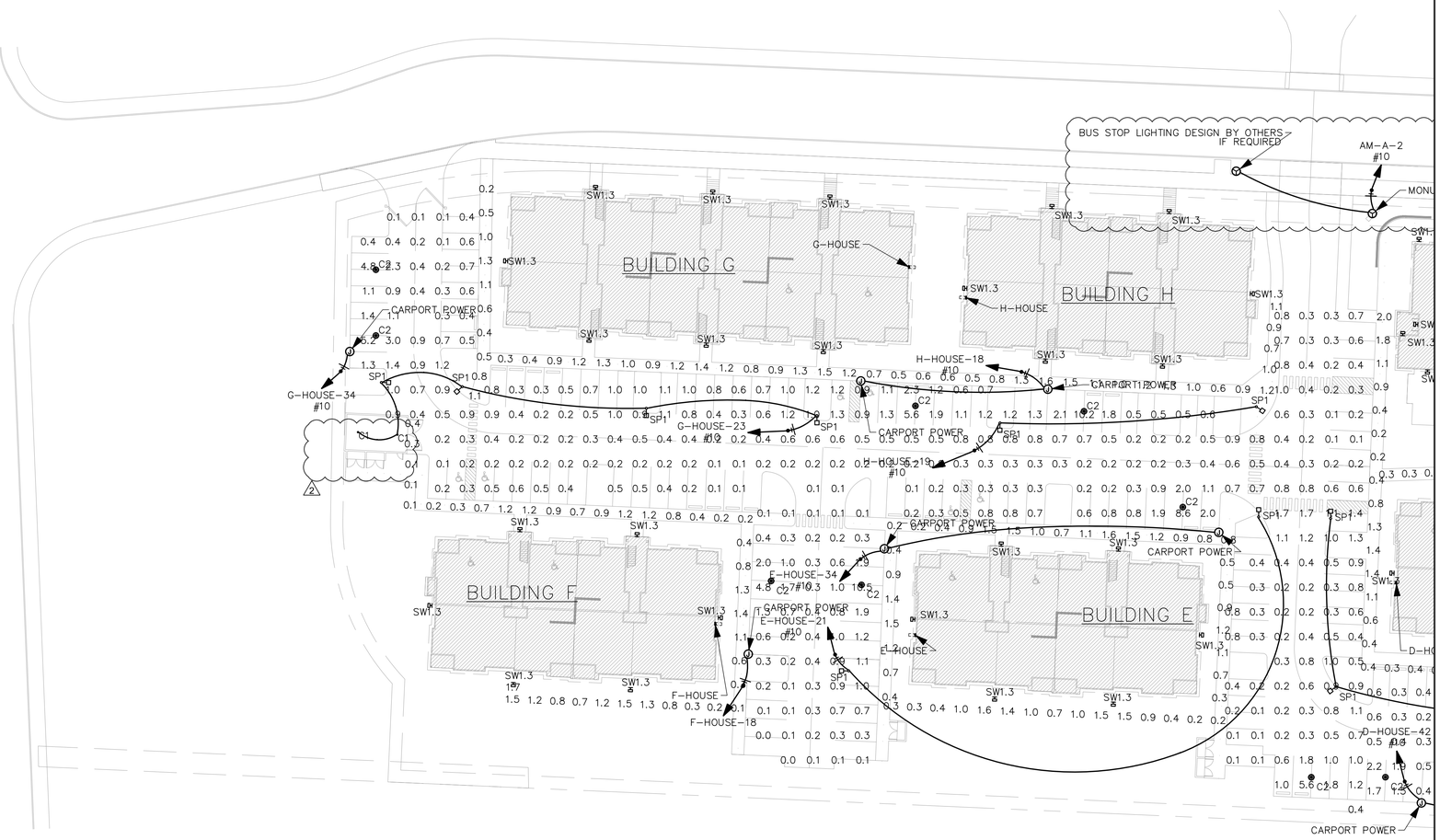

SITE LIGHTING PLAN – WEST

SCALE: 1/32" = 1'-0"

NO.	DATE	DESCRIPTION
2	5/2/25	CHANGES/PERMIT CORRECTION SET

REVISIONS

MARK STEINKE
STATE OF WASHINGTON
REGISTERED PROFESSIONAL ENGINEER
05/02/2025

ROBISON ENGINEERING, INC
19401 40TH AVE W, SUITE 302
LYNNWOOD, WA 98036
206.364.3343 tel.
REI PROJECT NO.: 1219-001
CONTACT: ARK@SPINELI

DRAWN: KL
DESIGNED: MHS
CHECKED: PSR
APPROVED: JAY

PROJECT: BRADLEY HEIGHTS APARTMENTS BUILDING H
27TH AVE SE AND 5TH ST SE PUYALLUP, WA

PRMU20240279

ROBISON ENGINEERING, INC
19401 40TH AVE W, SUITE 302
LYNNWOOD, WA 98036
PHONE:(206)364-3343

DATE: 05/02/2025

SHEET TITLE: SITE LIGHTING - WEST SITE PLAN

SHEET NO. E0.13

COPYRIGHT 2023, ROBISON ENGINEERING, INC.
KLYSAK F:\777-006 DHI MEADOWDALE APARTMENTS\DWG\FLAT E0.10 SITE PLAN.DWG 05-09-2023 10:47

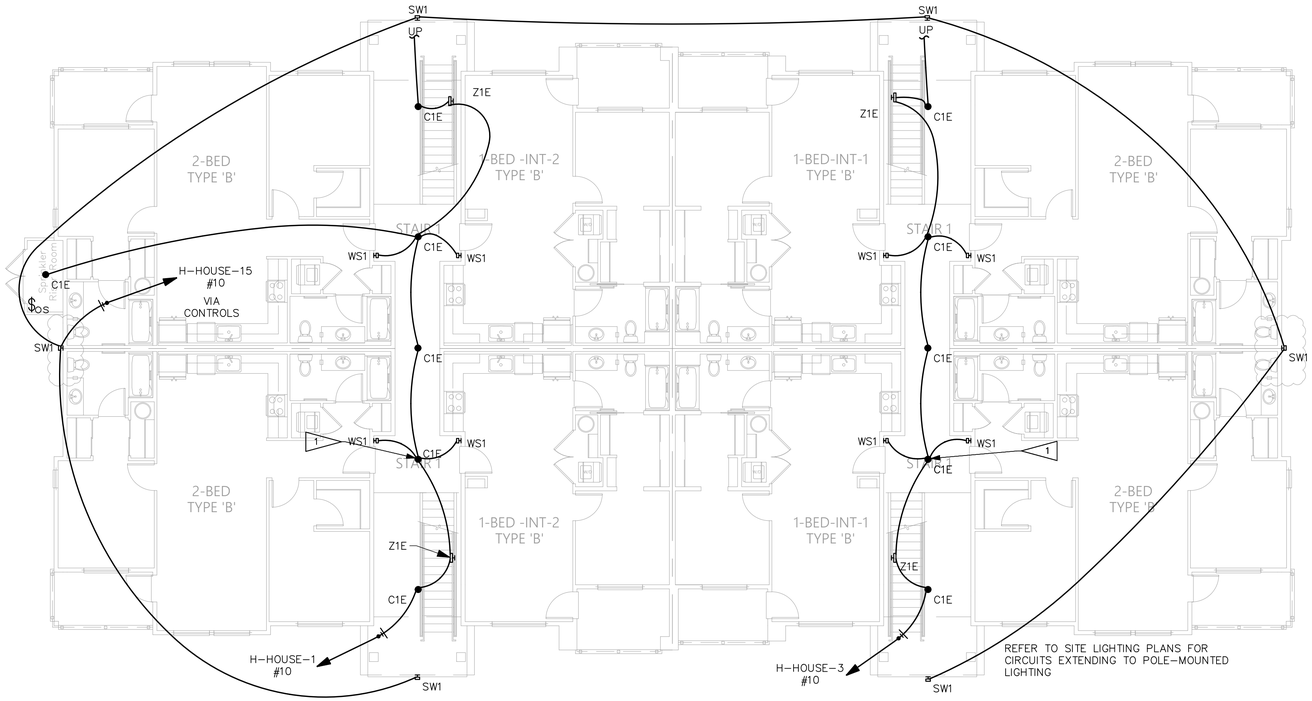

LIGHTING PLAN – BASEMENT

SCALE: 1/8" = 1'-0"

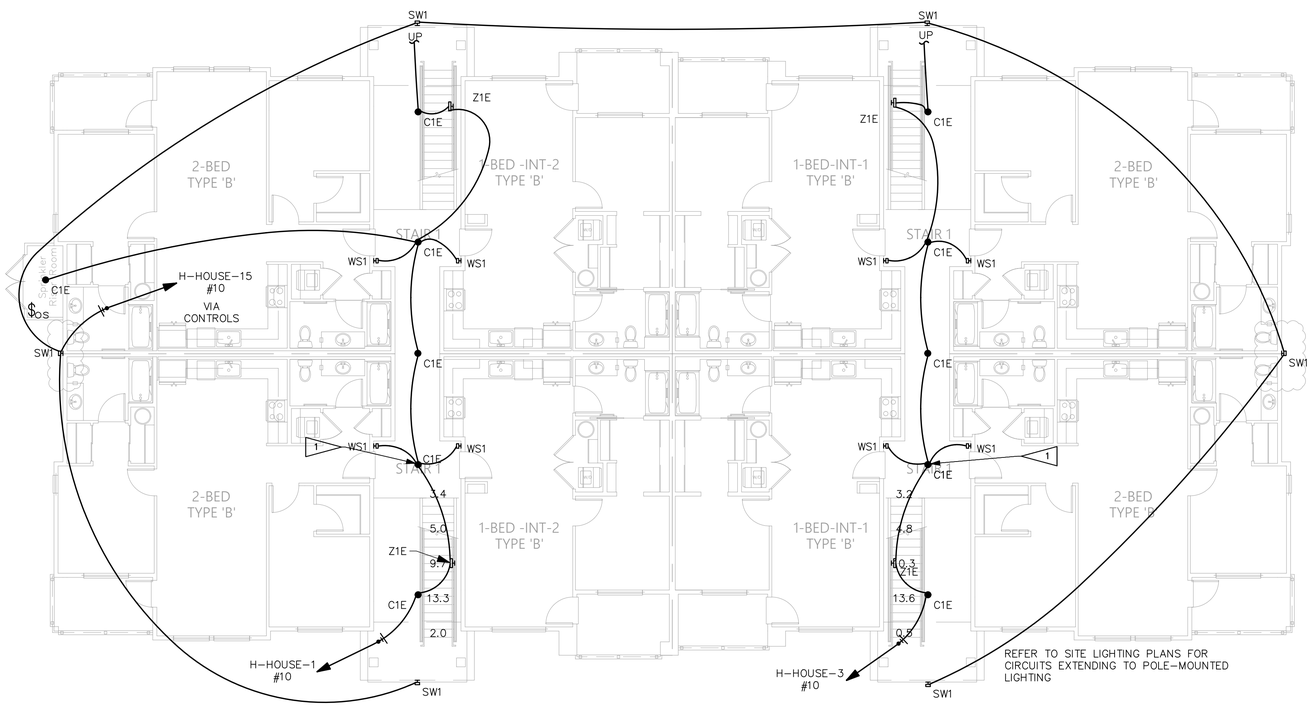

PHOTOMETRIC PLAN – BASEMENT

SCALE: 1/8" = 1'-0"

GENERAL NOTES

1. EMERGENCY EGRESS LIGHTING: EMERGENCY LUMINAIRES WITH 90 MINUTE BATTERY BACKUP.
2. REFER TO SERIES E500 DRAWINGS FOR TYPICAL UNIT PLANS SHOWING ELECTRICAL AND LIGHTING LAYOUT.
3. SEE SHEET E1.50 FOR LUMINAIRE SCHEDULE AND LIGHTING NOTES.

FLAG NOTES

1. CIRCUIT STAIRS VERTICALLY. LUMINAIRE(S) IN STAIRWELL
2. EXIT SIGNS: PROVIDE UNSWITCHED HOT.

Egress Basement Stairs Photometric Schedule

AVERAGE FOOT-CANDLES	6.67
MAXIMUM FOOT-CANDLES	13.3
MINIMUM FOOT-CANDLES	2.0
MINIMUM TO MAXIMUM FC RATIO	0.15
MAXIMUM TO MINIMUM FC RATIO	6.74
AVERAGE TO MINIMUM FC RATIO	3.38

NO.	DATE	DESCRIPTION
2	5/2/25	CHANGES/PERMIT CORRECTION SET

REVISIONS

MARK STEINKE
STATE OF WASHINGTON
REGISTERED PROFESSIONAL ENGINEER
05/02/2025

ROBISON ENGINEERING, INC
19401 40TH AVE W. SUITE 302
LYNNWOOD, WA 98036
206 364 3343 TEL
REG PROJECT NO.: 1219-001
CONTACT: ARK ESPINELI

DRAWN: KL
DESIGNED: MHS
CHECKED: PSR
APPROVED: JAY

PROJECT: BRADLEY HEIGHTS APARTMENTS BUILDING H
27TH AVE SE AND 5TH ST SE PUYALLUP, WA

PRMU20240279

ROBISON ENGINEERING, INC
19401 40TH AVE W. SUITE 302
LYNNWOOD, WA 98036
PHONE:(206)364-3343

DATE: 05/02/2025

SHEET TITLE: LIGHTING & PHOTOMETRIC PLAN - BASEMENT

SHEET NO. E1.00

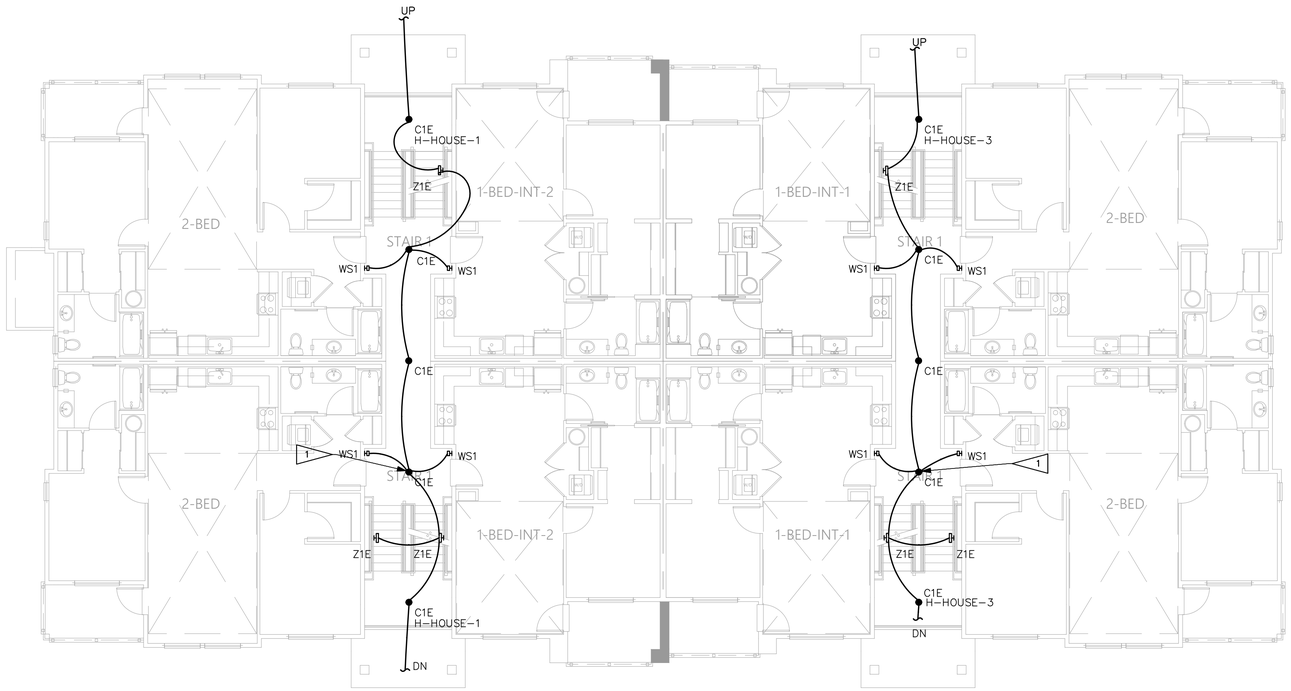

LIGHTING PLAN – 1ST FLOOR

SCALE: 1/8" = 1'-0"

N

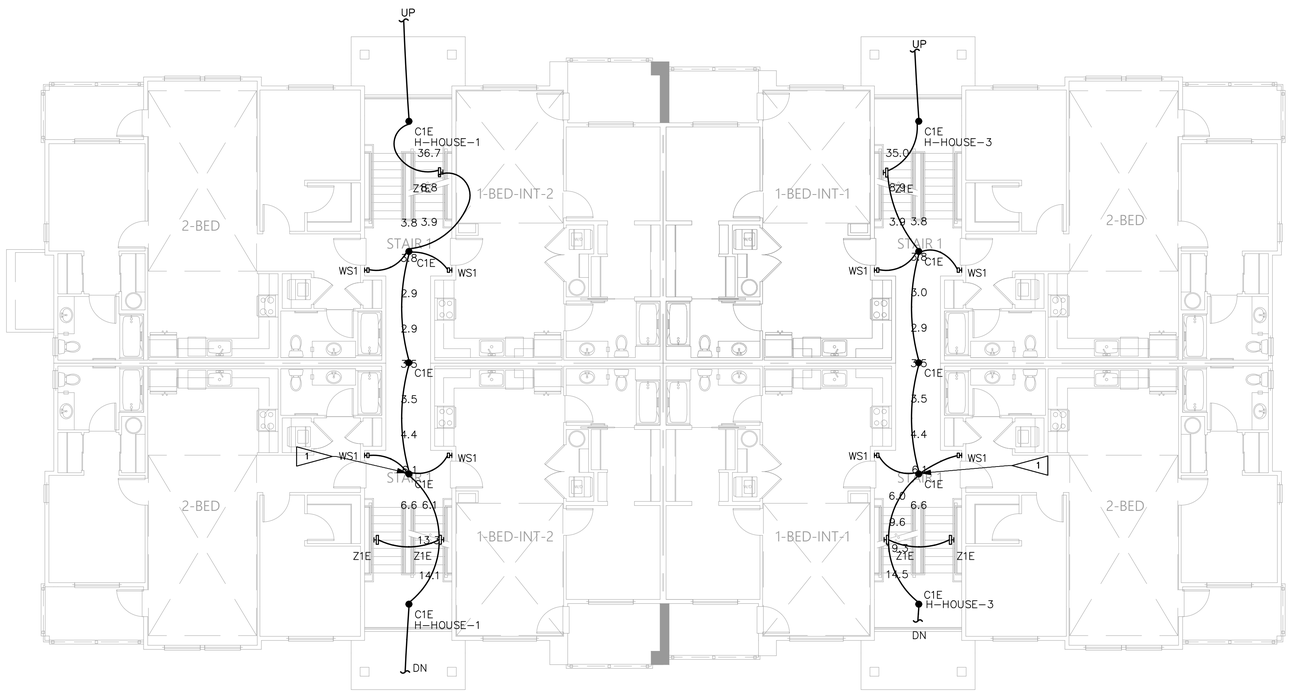

PHOTOMETRIC PLAN – 1ST FLOOR

SCALE: 1/8" = 1'-0"

N

GENERAL NOTES

1. EMERGENCY EGRESS LIGHTING: EMERGENCY LUMINAIRES WITH 90 MINUTE BATTERY BACKUP.
2. REFER TO SERIES E500 DRAWINGS FOR TYPICAL UNIT PLANS SHOWING ELECTRICAL AND LIGHTING LAYOUT.
3. SEE SHEET E1.50 FOR LUMINAIRE SCHEDULE AND LIGHTING NOTES.

FLAG NOTES

1. CIRCUIT STAIRS VERTICALLY. LUMINAIRE(S) IN STAIRWELL
2. EXIT SIGNS: PROVIDE UNSWITCHED HOT.

Egress Stairs Photometric Schedule

AVERAGE FOOT-CANDLES	11.16
MAXIMUM FOOT-CANDLES	14.1
MINIMUM FOOT-CANDLES	6.1
MINIMUM TO MAXIMUM FC RATIO	0.44
MAXIMUM TO MINIMUM FC RATIO	2.30
AVERAGE TO MINIMUM FC RATIO	1.82

Egress Corridor Photometric Schedule

AVERAGE FOOT-CANDLES	4.18
MAXIMUM FOOT-CANDLES	6.6
MINIMUM FOOT-CANDLES	2.9
MINIMUM TO MAXIMUM FC RATIO	0.44
MAXIMUM TO MINIMUM FC RATIO	2.26
AVERAGE TO MINIMUM FC RATIO	1.43

Egress Long Stairs Photometric Schedule

AVERAGE FOOT-CANDLES	16.50
MAXIMUM FOOT-CANDLES	36.7
MINIMUM FOOT-CANDLES	3.9
MINIMUM TO MAXIMUM FC RATIO	0.11
MAXIMUM TO MINIMUM FC RATIO	9.32
AVERAGE TO MINIMUM FC RATIO	4.19

NO.	DATE	DESCRIPTION
2	5/2/25	CHANGES/PERMIT CORRECTION SET

REVISIONS

MARK STEINKE
STATE OF WASHINGTON
REGISTERED PROFESSIONAL ENGINEER
05/02/2025

ROBISON ENGINEERING, INC
19401 40TH AVE W., SUITE 302
LYNNWOOD, WA 98036
206.364.3343 TEL
REG PROJECT NO.: 1219-001
CONTACT: ARK@STEINKE.LI

DRAWN: KL
DESIGNED: MHS
CHECKED: PSR
APPROVED: JAY

PROJECT: BRADLEY HEIGHTS APARTMENTS BUILDING H
27TH AVE SE AND 5TH ST SE PUYALLUP, WA

PRMU20240279

ROBISON ENGINEERING, INC
19401 40TH AVE W. SUITE 302
LYNNWOOD, WA 98036
PHONE:(206)364-3343

DATE: 05/02/2025

SHEET TITLE: LIGHTING & PHOTOMETRIC PLAN - 1ST FLOOR

SHEET NO. E1.01

COPYRIGHT 2022, ROBISON ENGINEERING, INC.
MSTEINKE G:_RESOURCE FOLDER\STEINKE LEAVENS TEMPLATES\APARTMENT 30X42\E1.00 LIGHTING.DWG 09-26-2022 11:30

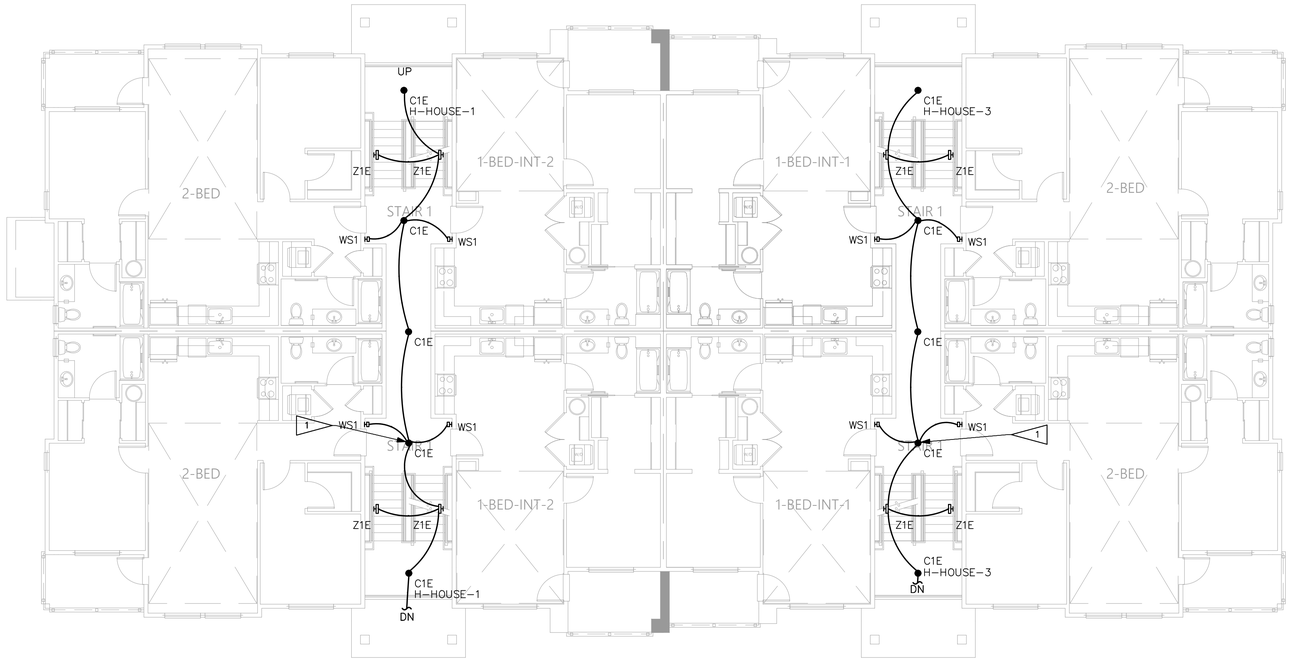

LIGHTING PLAN – 2ND & 3RD FLOOR

SCALE: 1/8" = 1'-0"

N

GENERAL NOTES

1. EMERGENCY EGRESS LIGHTING: EMERGENCY LUMINAIRES WITH 90 MINUTE BATTERY BACKUP.
2. REFER TO SERIES E500 DRAWINGS FOR TYPICAL UNIT PLANS SHOWING ELECTRICAL AND LIGHTING LAYOUT.
3. SEE SHEET E1.50 FOR LUMINAIRE SCHEDULE AND LIGHTING NOTES.

FLAG NOTES

1. CIRCUIT STAIRS VERTICALLY. LUMINAIRE(S) IN STAIRWELL
2. EXIT SIGNS: PROVIDE UNSWITCHED HOT.

NO.	DATE	DESCRIPTION
2	5/2/25	CHANGES/PERMIT CORRECTION SET

REVISIONS

MARK STEINKE
STATE OF WASHINGTON
REGISTERED PROFESSIONAL ENGINEER
05/02/2025

ROBISON ENGINEERING, INC
19401 40TH AVE W., SUITE 302
LYNNWOOD, WA 98036
206.364.3343 TEL
REI PROJECT NO.: 1219-001
CONTACT: ARIKESPINELI

DRAWN: KL
DESIGNED: MHS
CHECKED: PSR
APPROVED: JAY

PROJECT: BRADLEY HEIGHTS APARTMENTS BUILDING H
27TH AVE SE AND 5TH ST SE PUYALLUP, WA

PRMU20240279

ROBISON ENGINEERING, INC
19401 40TH AVE W. SUITE 302
LYNNWOOD, WA 98036
PHONE:(206)364-3343

DATE: 05/02/2025

SHEET TITLE: LIGHTING PLAN - 2ND & 3RD FLOOR

SHEET NO. E1.02

COPYRIGHT 2022, ROBISON ENGINEERING, INC.
MSTEINKE G:_RESOURCE FOLDER\STEINKE LEAVENS TEMPLATES\APARTMENT 30X42\E1.00 LIGHTING.DWG 09-26-2022 11:30

EXTERIOR LUMINAIRE SCHEDULE

CALLOUT	SYMBOL	MOUNTING	DESCRIPTION	MODEL	VOLTAGE	TYPE	CRI / CCT	LAMPING	WATTAGE
SP1		16' POLE	POLE LIGHT – PARKING & DRIVE AISLE – COMFORT OPTICS – B2 U0 G2	GARDCO: P20 C A02 830 T1S AR1 120 BL30–MW PCB	MULTIPLE	INTEGRAL CONTROLS	80 / 3000K	(1) 36W LED	36
SW1		SURFACE – 12' AFF	WALL SCONCE – AREA LIGHT – B1 U0 G1	GARDCO: GWM A06 830 T3M 120 MW30 PCB	120	INTEGRAL CONTROLS	80 / 3000K	(1) 16W LED	16

NOTES:
1. CONTRACTOR TO FURNISH AND INSTALL ALL FIXTURES.
2. LUMINAIRE SCHEDULE IS BOD ONLY. CONTRACTOR TO SUBMIT FIXTURE MODEL OR EQUIVALENT. CONTRACTOR TO COORDINATE FIXTURE FINISHES WITH ARCHITECT/OWNER.
3. FIXTURE CATALOG NUMBERS DO NOT NECESSARILY DENOTE SPECIFIC MOUNTING ACCESSORIES. CONTRACTOR TO PROVIDE ALL NECESSARY ACCESSORIES TO SUCCESSFULLY COMPLETE THE INSTALLATION.
4. 'BUG' RATING ON EXTERIOR FIXTURES INDICATES 'BACKLIGHT', 'UPLIGHT', AND 'GLARE' AS STANDARDS IN CLASSIFYING OUTDOOR LIGHT FIXTURES.

GENERAL LUMINAIRE SCHEDULE

CALLOUT	SYMBOL	MOUNTING	DESCRIPTION	MODEL	VOLTAGE	TYPE	CRI / CCT	LAMPING	WATTAGE
B1		SURFACE	4' NARROW WRAP – BOH	DAY–BRITE CFI: FSW440L835 UNV DIM	120	0–10V DIMMING	80 / 3000K	(1) 31.4W LED	31.4
C1E		SURFACE	4" SURFACE DOWNLIGHT	DMF: DRDH N JO 70S EM / DRD5S 4 R 07 9 30 EM	120	0–10V DIMMING	90 / 3000K	(1) 9W LED	9
D1		RECESSED	RECESSED DOWNLIGHT – SLOPED CEILING	DMF: DRD4M 10 9 30 FL X 0 / DRDH N JS 1004	120	0–10V DIMMING	90 / 3000K	(1) 12W LED	12
P1		PENDANT	STEM MOUNT DOWNLIGHT – SLOPED CEILING – 4' STEM	DMF: DCR T4 S X A 30 FL 0 00 30 XX O 00 [FINISH]	120	0–10V DIMMING	90 / 3000K	(1) 40W LED	40
WS1		SURFACE	WALL SCONCE – EM BATTERY BACKUP	TBD	120	TBD DIMMING	TBD / TBD	(1) 5W LED	5
X1		SURFACE	EXIT SIGN – EMERGENCY BATTERY BACKUP – HATCH INDICATES LIT FACE	LSI: EMS WB SERIES (OR EQUAL)	MULTIPLE	EM	EM / EM	(1) 5W EM	5
X2		SURFACE	COMBO EXIT SIGN	LSI: CEC (OR EQUAL)	MULTIPLE	EM	EM / EM	(1) 5W EM	5
X3		SURFACE	EMERGENCY LIGHT – EMERGENCY BATTERY BACKUP DAMP LOCATION RATED – MAX 35' SPACING	LITHONIA: ELM2LF (OR EQUAL)	120	EM	EM / EM	(1) 5W EM	5
X4		WALL	EXTERIOR EMERGENCY LIGHT – EMERGENCY ON ONLY – MAX SPACING 35'	NORA LIGHTING: NE–902LED	120	EM	35' MAX SPACING	(1) 5W LED	5
Z1E		WALL	WALL PACK	LITHONIA: WPX1 LED P1 30K MVOLT	120	EM	70 / 3000K	(1) 11W LED	11

NOTES:
1. CONTRACTOR TO FURNISH AND INSTALL ALL FIXTURES.
2. LUMINAIRE SCHEDULE IS BOD ONLY. CONTRACTOR TO SUBMIT FIXTURE MODEL OR EQUIVALENT. CONTRACTOR TO COORDINATE FIXTURE FINISHES WITH ARCHITECT/OWNER.
3. FIXTURE CATALOG NUMBERS DO NOT NECESSARILY DENOTE SPECIFIC MOUNTING ACCESSORIES. CONTRACTOR TO PROVIDE ALL NECESSARY ACCESSORIES TO SUCCESSFULLY COMPLETE THE INSTALLATION.

LIGHTING CONTROLS LEGEND

SYMBOL	CONTROL TYPE	CONTROL FUNCTION
a k	TOGGLE SWITCH	MANUAL ON/OFF LIGHTING CONTROL. SUBSCRIPT INDICATES WHICH FIXTURES ARE TO BE CONTROLLED BY WHICH SWITCH (WSEC C405.2.3). SUBSCRIPT 'k' INDICATES TAMPER RESISTANT KEYED SWITCH FOR USE BY AUTHORIZED PERSONNEL ONLY.
a	DIMMER SWITCH	MANUAL MULTI–LEVEL LIGHTING CONTROL. SWITCH SHALL ALSO HAVE MANUAL ON/OFF FUNCTIONALITY. SUBSCRIPT INDICATES WHICH FIXTURES ARE TO BE CONTROLLED BY WHICH DIMMER. (C405.2.3)
vs vs os os	TOGGLE/DIMMER SWITCH WITH OCCUPANCY SENSOR	SWITCHES LABELED 'os' OR 'vs' SHALL TURN OFF ALL CONNECTED LUMINAIRES WITHIN 20 MINUTES OF SPACE BEING VACANT. (C405.2.1.1)
CS–01	CONTROL STATION; SEE LIGHTING CONTROL ZONE TABLE ON PLANS.	MANUAL LOCAL LIGHTING CONTROL (C405.2.1.1). CONTROL STATION SHALL HAVE CAPACITY TO CONTROL MULTIPLE ZONES AND MULTIPLE SCENES AS NEEDED. SUBSCRIPT CORRESPONDS TO 'LIGHTING CONTROLS' TABLE ON PLANS.
OS	SURFACE MOUNTED OCCUPANCY SENSOR	AUTOMATIC LIGHTING CONTROL SHALL TURN OFF ALL CONNECTED LUMINAIRES WITHIN 20 MINUTES OF SPACE BEING VACANT. (C404.2.1.1)
ax PS	MULTIZONE PHOTOSENSOR	AUTOMATIC LIGHTING CONTROL SHALL AUTOMATICALLY ADJUST THE LIGHT OUTPUT OF ALL CONNECTED LUMINAIRES BASED ON THE DAYLIGHT LEVEL IN THE PRIMARY AND SECONDARY ZONES (C405.2.4). SUBSCRIPT INDICATES WHICH FIXTURES ARE TO BE CONTROLLED BY ZONE; 'x' INDICATES MULTIPLE ZONE CONTROL.

GENERAL LIGHTING NOTES

City of Puyallup Development & Permitting Services ISSUED PERMIT
Building Planning Engineering Public Works Fire Traffic

1. LIGHTING CONTROLS SHALL BE INSTALLED WHICH MEET ALL REQUIREMENTS OF LOCAL ENERGY CODES.
2. EMERGENCY LIGHT FIXTURES: IN ADDITION TO SWITCH–LEG, PROVIDE UNSWITCHED HOT TO SERVE INTERNAL BATTERY AND CHARGER.
3. LOCATIONS OF OCCUPANCY SENSORS, PHOTO SENSORS, DIMMERS, AND SWITCHES ARE DIAGRAMMATIC. CONTRACTOR TO COORDINATE QUANTITIES AND OPTIMAL LOCATIONS WITH LIGHTING CONTROL MANUFACTURER AND ARCH/OWNER.
4. AUTOMATIC LIGHTING SHUT–OFF CONTROLS SHALL BE PROVIDED BY LOCAL OCCUPANCY SENSORS UNLESS OTHERWISE NOTED. PUBLIC SPACES ARE ACTIVE 24/7 AND THEREFORE EXEMPT FROM AUTOMATIC LIGHTING SHUT–OFF REQUIREMENTS FOR SECURITY. (WSEC C405.2)
5. DAYLIGHT ZONES ARE SHOWN ON PLANS AS DEFINED BY WASHINGTON STATE ENERGY CODE (WSEC) C405.2.4.2. SIDELIGHT DAYLIGHT ZONES ARE REFERRED TO AS 'PRIMARY' AND 'SECONDARY' ON PLANS AND DENOTED BY DASHED LINES.
6. FOR CUSTOM FF&E FIXTURES, IT IS THE MANUFACTURER'S RESPONSIBILITY TO FURNISH PRODUCTS WHICH ARE COMPLIANT WITH ALL REQUIREMENTS OF LOCAL ENERGY CODES, AS WELL AS MATCH THE ELECTRICAL SPECIFICATIONS PROVIDED IN THE LUMINAIRE SCHEDULES. PROVIDE SUBMITTAL SHOP DRAWINGS WITHIN 30 DAYS OF RECEIVING FIXTURE ORDER. SUBMITTALS SHALL CLEARLY INDICATE LAMPING AND MAXIMUM WATTAGE RATING OF LAMP SOCKETS. NON–COMPLIANT FIXTURES REJECTED BY ELECTRICAL INSPECTOR SHALL BE RETURNED TO THE MANUFACTURER FOR REWORKING AND/OR RE–LABELING.
7. ALL FIXTURES SHALL BE INSTALLED ACCORDING TO THE MANUFACTURER'S INSTRUCTIONS.
8. CONTRACTOR SHALL BE RESPONSIBLE TO ORDER ALL NECESSARY HARDWARE, ELECTRICAL CABLE, TIMERS, TRANSFORMERS, ETC., AS REQUIRED FOR COMPLETION OF INSTALLATION OF A FULLY FUNCTIONING SYSTEM.
9. CONTRACTOR SHALL BE RESPONSIBLE FOR EQUIPPING ALL FIXTURES WITH THE EXACT LAMPS SPECIFIED IN THE FIXTURE SCHEDULE.
10. WHERE FIXTURES REQUIRE REMOTE TRANSFORMERS OR BALLASTS, THE CONTRACTOR SHALL DETERMINE LOCATIONS AS REQUIRED FOR EVEN LOAD DISTRIBUTION, SERVICE ACCESS, AND VENTILATION.
11. THE CONTRACTOR SHALL COORDINATE WITH THE ELECTRICAL ENGINEER FOR EXACT LOCATIONS OF TIMERS AND/OR PHOTO CELLS, IF ANY.
12. WHERE APPLICABLE, THE CONTRACTOR SHALL AIM AND ADJUST LIGHTING FIXTURES AS DIRECTED BY THE LIGHTING DESIGNER UPON COMPLETION OF THE INSTALLATION.

SPECIAL NOTE TO THE CONTRACTOR:

1. FIXTURE SUBMITTALS THAT DO NOT INCLUDE LAMP SPECIFICATIONS WILL BE CONSIDERED INCOMPLETE AND WILL NOT BE REVIEWED.

LIGHTING CONTROL SYSTEM REQUIREMENTS

1. CONTRACTOR TO PROVIDE A FULLY OPERATIONAL LIGHTING CONTROL SYSTEM.
2. CONTRACTOR SHALL VERIFY THE COMPATIBILITY OF DIMMING AND CONTROL MODULES WITH FIXTURE TYPES PRIOR TO INSTALLATION.
3. ELECTRICAL CONTRACTOR SHALL COORDINATE WITH A LIGHTING CONTROLS VENDOR TO OBTAIN LIGHTING CONTROL SYSTEM PACKAGE COMPLETE WITH DEVICES, WIRING DIAGRAMS, ANNOTATED PLANS INDICATING WHICH DEVICE TO BE USED IN EACH LOCATION, CONNECTION REQUIREMENTS, SET UP INSTRUCTIONS, COMMISSIONING AND CHECK–OUT FOLLOWING COMPLETION. PROVIDE ALL LOW VOLTAGE WIRING AS REQUIRED FOR CONTROL DEVICE INTERCONNECTIONS.
4. INSTALLER QUALIFICATIONS: TECHNICIAN INSTALLING AND WIRING THE LIGHTING CONTROL SYSTEM SHALL HAVE INSTALLED THIS SAME SYSTEM AT LEAST ONCE PREVIOUSLY. TECHNICIAN SHALL HAVE RECEIVED TRAINING BY FACTORY REPRESENTATIVE ON THE SYSTEM BEING INSTALLED.
5. PROVIDE LIGHTING CONTROL SYSTEM TO PERFORM THE FUNCTIONS DESCRIBED BELOW:
   - 5.1. LIGHTING CONTROL SCHEDULE: PROVIDE SEPARATE SWITCHING AND DIMMING CONTROL FOR LIGHTING ZONES AS INDICATED.
   - 5.2. AUTOMATIC LIGHTING CONTROLS:
     - 5.2.1. UNLESS OTHERWISE NOTED ON PLANS, OCCUPANCY SENSORS SHALL AUTOMATICALLY TURN OFF ALL CONNECTED LIGHTING WITHIN 20 MINUTES OF SPACE BEING UNOCCUPIED. OCCUPANCY SENSORS SHALL EITHER BE MANUAL ON OR SHALL BE CONTROLLED TO AUTOMATICALLY TURN THE LIGHTING ON TO NOT MORE THAN 50 PERCENT POWER EXCEPT WHERE MANUAL ON WOULD ENDANGER THE SAFETY OR SECURITY OF THE ROOM OR BUILDING OCCUPANTS. (C405.2.1.1)
     - 5.2.2. MULTI–ZONE PHOTO–SENSORS SHALL PROVIDE SEPARATE CONTROL FOR LUMINAIRES IN EACH TYPE OF DAYLIGHT ZONE. (C405.2.4.1)
     - 5.2.3. EXTERIOR LIGHTING CONTROLS SHALL AUTOMATICALLY TURN OFF ALL EXTERIOR LIGHTING AS A FUNCTION OF AVAILABLE DAYLIGHT. BUILDING FACADE AND LANDSCAPE LIGHTING SHALL HAVE CONTROLS THAT AUTOMATICALLY SHUT OFF THE LIGHTING FOR A MINIMUM OF 6 HOURS PER NIGHT OR NOT LATER THAN ONE HOUR AFTER BUSINESS CLOSING TO NOT EARLIER THAN ONE HOUR BEFORE BUSINESS OPENING, WHICHEVER IS LESS. OTHER LIGHTING SHALL HAVE CONTROLS CONFIGURED TO AUTOMATICALLY REDUCE THE CONNECTED LIGHTING POWER BY AT LEAST 30 PERCENT FROM NO LATER THAN 12 MIDNIGHT TO 6 AM OR FROM ON HOUR AFTER BUSINESS CLOSING TO ONE HOUR BEFORE BUSINESS OPENING OR DURING ANY PERIOD WHEN NO ACTIVITY HAS BEEN DETECTED FOR A TIME OF NO LONGER THAN 15 MINUTES. (C405.2.6)
6. MEANS OF EGRESS ILLUMINATION: AT ANY TIME THE BUILDING IS OCCUPIED, THE MEANS OF EGRESS SHALL BE ILLUMINATED AT AN INTENSITY OF NOT LESS THAN 1 FOOTCANDLE AT FLOOR LEVEL. (IBC 1008.2.1)
7. DURING EMERGENCY CONDITIONS EMERGENCY LIGHTING CIRCUITS SHALL BYPASS ALL LIGHTING CONTROLS IN ORDER TO ENERGIZE ALL CONNECTED LUMINAIRES AT FULL CAPACITY. PROVIDE UL924 RELAYS AS REQUIRED TO BYPASS AREA CONTROLS.
   - 7.1. EMERGENCY PATHWAY EGRESS LIGHTING: ILLUMINATION PROVIDED ALONG THE EGRESS PATH AT FLOOR LEVEL SHALL AVERAGE AT LEAST 1 FOOT CANDLE. (IBC 1008.3.5)
   - 7.2. EMERGENCY LIGHTING SHALL BE SUPPLIED BY: ELECTRICAL CONTRACTOR

EXIT SIGN NOTES

DURING CONSTRUCTION UPON COMPLETION OF A TYPICAL FLOOR FRAMING AND BEFORE WALL COVER, ELECTRICAL CONTRACTOR SHALL WALK THE EGRESS PATHS WITH THE LOCAL INSPECTOR (AHJ) TO CONFIRM THAT ALL THE EXIT SIGNS ARE LOCATED PER THE AHJ'S SATISFACTION AND IDENTIFY ANY ADDITIONAL EXIT SIGNS THAT THE AHJ WISHES TO BE INSTALLED (IBC 1013.1). CONTRACTOR SHALL PROVIDE UP TO 10% ADDITIONAL EXIT SIGNS AT NO ADDITIONAL COST.

NO.	DATE	DESCRIPTION
2	5/2/25	CHANGES/PERMIT CORRECTION SET

REVISIONS

MARK STEINKE, STATE OF WASHINGTON, REGISTERED PROFESSIONAL ENGINEER
05/02/2025

ROBISON ENGINEERING, INC
19401 40TH AVE W., SUITE 302
LYNNWOOD, WA 98036
206-364-3343 TEL
REI PROJECT NO.: 1219-001
CONTACT: ARIK ESPINELI

DRAWN: KL
DESIGNED: MHS
CHECKED: PSR
APPROVED: JAY

PROJECT: BRADLEY HEIGHTS APARTMENTS BUILDING H
27TH AVE SE AND 5TH ST SE PUYALLUP, WA

PRMU20240279

ROBISON ENGINEERING, INC
19401 40TH AVE W. SUITE 302
LYNNWOOD, WA 98036
PHONE:(206)364-3343

DATE: 05/02/2025

SHEET TITLE: LIGHTING NOTES & LUMINAIRE SCHEDULE

SHEET NO. E1.50

COPYRIGHT 2022, ROBISON ENGINEERING, INC.
MSTEINKE G:_RESOURCE FOLDER\STEINKE LEAVENS TEMPLATES\APARTMENT 30X42\E1.00 LIGHTING.DWG 09-26-2022 11:30

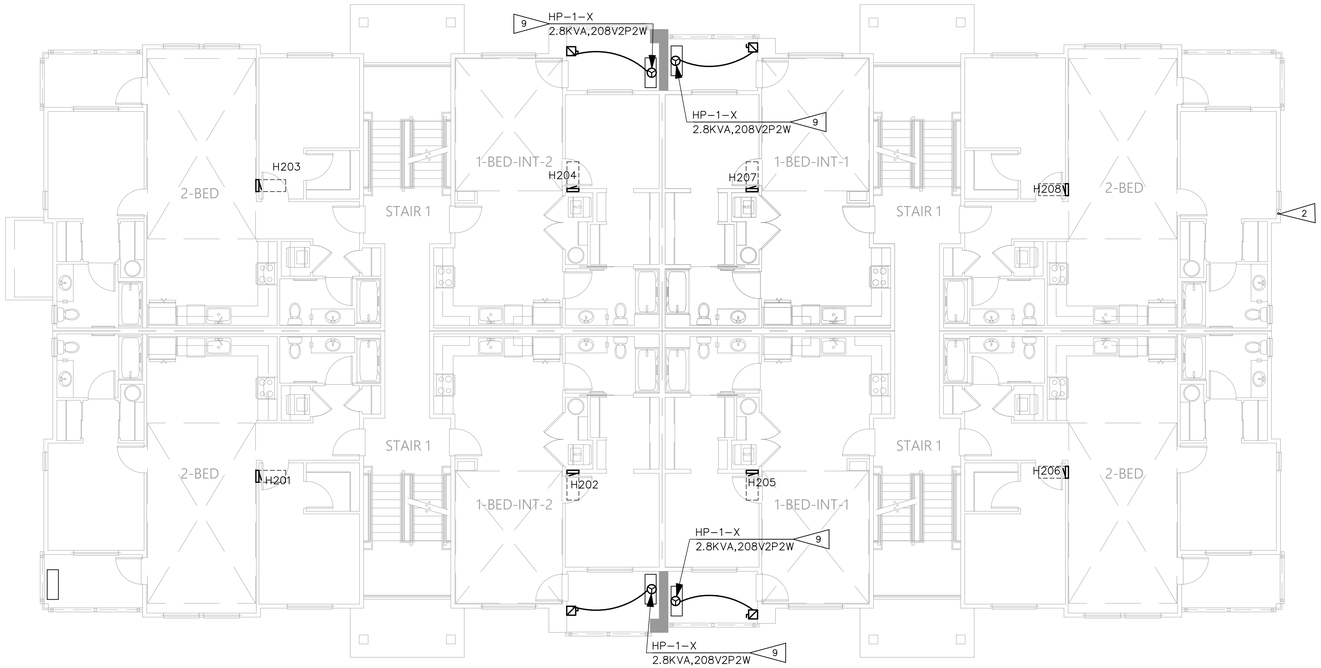

POWER PLAN – 1ST FLOOR

SCALE: 1/8" = 1'-0"

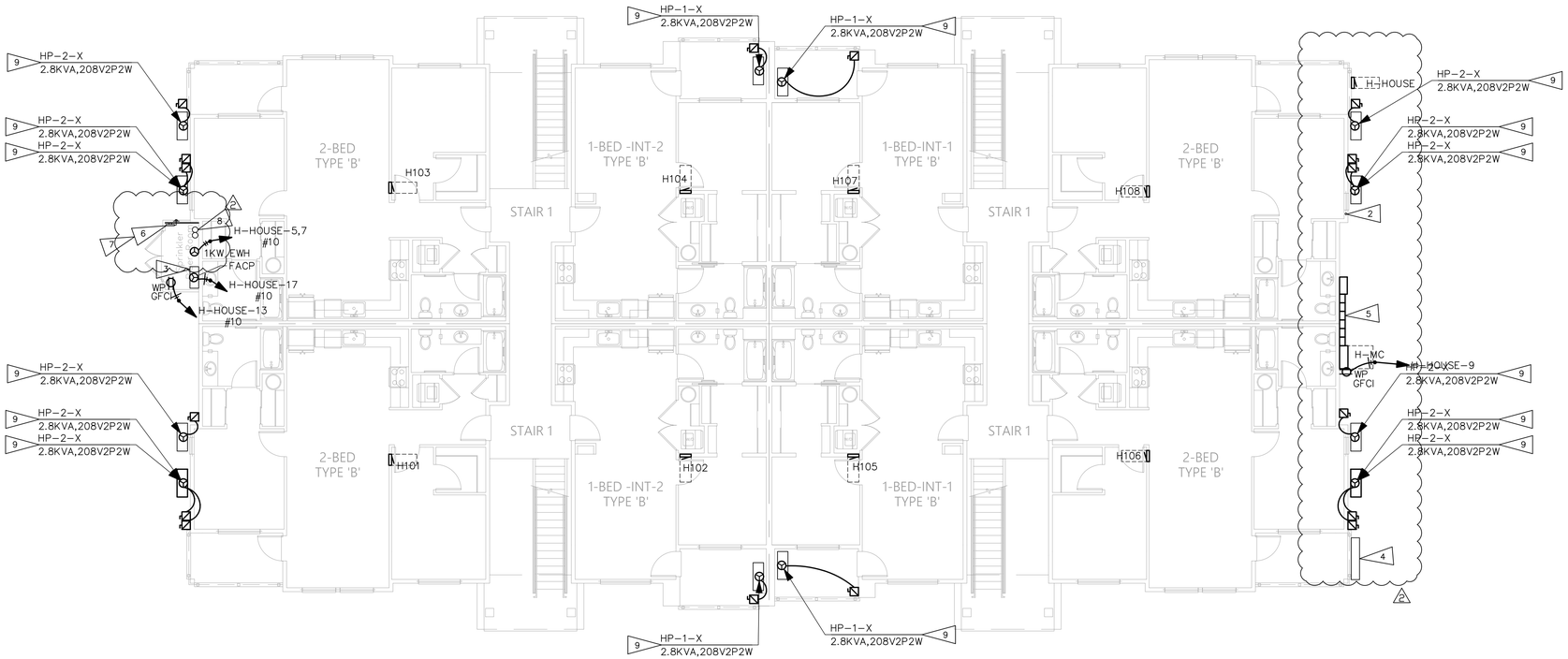

POWER PLAN – BASEMENT

SCALE: 1/8" = 1'-0"

SHEET NOTES:

1. WIRING METHOD FOR APARTMENT FEEDERS MUST BE SUITABLE FOR THE TYPE OF CONSTRUCTION. SEE NEC 334.10

FLAG NOTES:

(NOT EVERY FLAG IS USED ON EVERY SHEET)

1. FUTURE EV CHARGING STATIONS: PROVIDE 1-1/4" CONDUIT WITH PULL WIRE FROM EV PANEL(S) IN MAIN ELECTRICAL ROOM. TERMINATE CONDUIT IN A J-BOX ON WALL FOR FUTURE USE.
2. PROVIDE 2½"C WITH PULL STRING WEATHER CAP TO ROOF FOR FUTURE SOLAR PATHWAY. COORDINATE RISER LOCATION WITH ARCHITECT.
3. LOCATION OF FIRE ALARM PANEL TO BE COORDINATED BY FIRE ALARM CONTRACTOR WITH FIRE AUTHORITIES.
4. SPACE FOR FUTURE SOLAR EQUIPMENT.
5. PROVIDE LEVEL ACCESS SURFACE IN FRONT OF ELECTRICAL EQUIPMENT.
6. PROVIDE 4'X8'X3/4" FIRE RETARDANT PLYWOOD. BOTTOM 6"AFF TOP OF PLYWOOD 102" AFF.
7. PROVIDE COPPER GROUND BAR 2"X24"X1/4" AND #6 COPPER GROUND WIRE TO MAIN SERVICE GROUND.
8. PROVIDE (2) 4" SLEEVES FOR LV CABLE TO COMM/DATA UTILITIES.COORDINATE RISER LOCATION WITH ARCHITECT.
9. DWELLING UNIT HEAT-PUMPS: POWER FOR HEAT PUMP SHALL BE RUN FROM DWELLING-UNIT ELECTRICAL PANEL. COORDINATE EXACT LOCATION WITH MECHANICAL CONTRACTOR PRIOR TO INSTALLATION. FUSED DISCONNECT SHALL BE INSTALLED NEAR MECHANICAL EQUIPMENT WITH NEC CODE MINIMUM CLEARANCES IN FRONT OF IT.

NO.	DATE	DESCRIPTION
2	5/2/25	CHANGES/PERMIT CORRECTION SET

REVISIONS

MARK STEINKE
STATE OF WASHINGTON
REGISTERED PROFESSIONAL ENGINEER
05/02/2025

ROBISON ENGINEERING, INC
19401 40TH AVE W, SUITE 302
LYNNWOOD, WA 98036
206.364.3343
REI PROJECT NO.: 1219-001
CONTACT: MIKE STEINKE

DRAWN: KL
DESIGNED: MHS
CHECKED: PSR
APPROVED: JAY

PROJECT: BRADLEY HEIGHTS APARTMENTS BUILDING H
27TH AVE SE AND 5TH ST SE PUYALLUP, WA

PRMU20240279

ROBISON ENGINEERING, INC
19401 40TH AVE W, SUITE 302
LYNNWOOD, WA 98036
PHONE:(206)364-3343

DATE: 05/02/2025

SHEET TITLE: POWER PLAN - BASEMENT & 1ST FLOOR

SHEET NO. E3.00

COPYRIGHT 2022, ROBISON ENGINEERING, INC.
MSTEINKE G:_RESOURCE FOLDER\STEINKE LEAVENS TEMPLATES\APARTMENT 30X42\E1.00 LIGHTING.DWG 09-26-2022 11:30

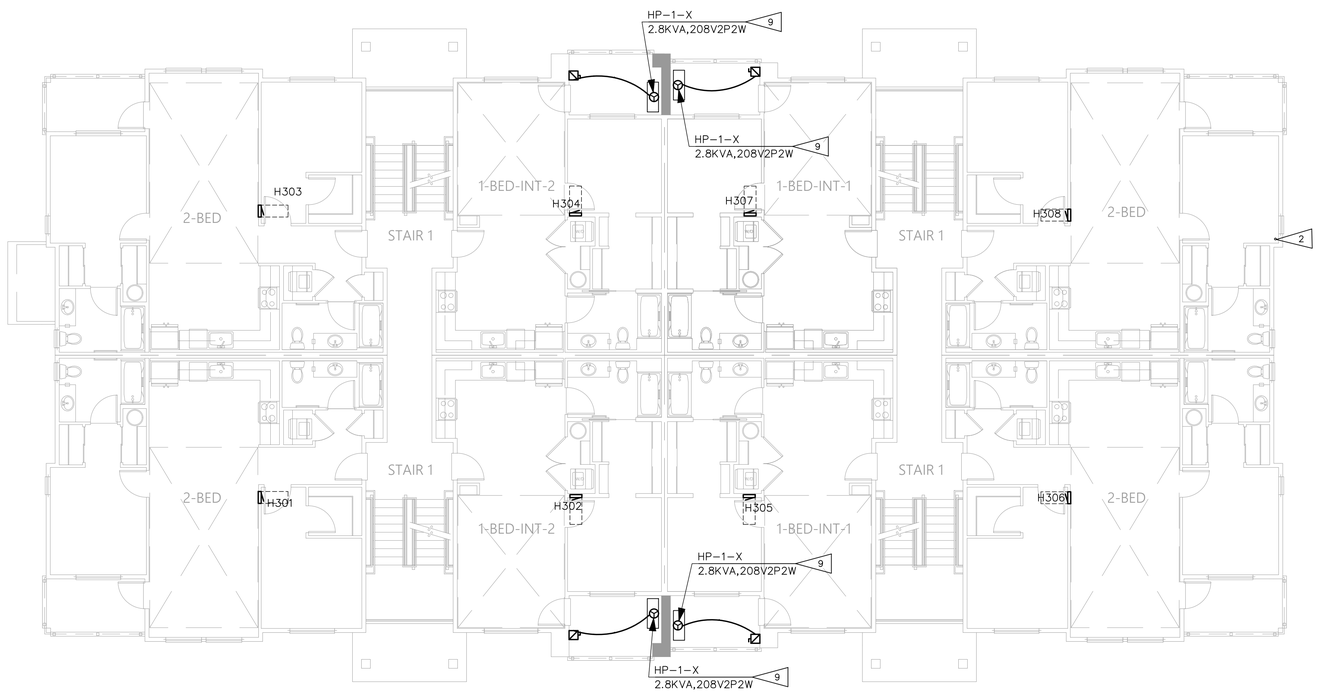

POWER PLAN – 2ND & 3RD FLOOR

SCALE: 1/8" = 1'-0"

N

SHEET NOTES:

1. WIRING METHOD FOR APARTMENT FEEDERS MUST BE SUITABLE FOR THE TYPE OF CONSTRUCTION. SEE NEC 334.10

FLAG NOTES:

(NOT EVERY FLAG IS USED ON EVERY SHEET)

1. FUTURE EV CHARGING STATIONS:
   PROVIDE 1-1/4" CONDUIT WITH PULL WIRE FROM EV PANEL(S) IN MAIN ELECTRICAL ROOM. TERMINATE CONDUIT IN A J-BOX ON WALL FOR FUTURE USE.
2. PROVIDE 2½"C WITH PULL STRING WEATHER CAP TO ROOF FOR FUTURE SOLAR PATHWAY. COORDINATE RISER LOCATION WITH ARCHITECT.
3. LOCATION OF FIRE ALARM PANEL TO BE COORDINATED BY FIRE ALARM CONTRACTOR WITH FIRE AUTHORITIES.
4. SPACE FOR FUTURE SOLAR EQUIPMENT.
5. PROVIDE LEVEL ACCESS SURFACE IN FRONT OF ELECTRICAL EQUIPMENT.
6. PROVIDE 4'X8'X3/4" FIRE RETARDANT PLYWOOD. BOTTOM 6"AFF TOP OF PLYWOOD 102" AFF.
7. PROVIDE COPPER GROUND BAR 2"X24"X1/4" AND #6 COPPER GROUND WIRE TO MAIN SERVICE GROUND.
8. PROVIDE (2) 4" SLEEVES FOR LV CABLE TO COMM/DATA UTILITIES.COORDINATE RISER LOCATION WITH ARCHITECT.
9. DWELLING UNIT HEAT-PUMPS: POWER FOR HEAT PUMP SHALL BE RUN FROM DWELLING-UNIT ELECTRICAL PANEL. COORDINATE EXACT LOCATION WITH MECHANICAL CONTRACTOR PRIOR TO INSTALLATION. FUSED DISCONNECT SHALL BE INSTALLED NEAR MECHANICAL EQUIPMENT WITH NEC CODE MINIMUM CLEARANCES IN FRONT OF IT.

NO.	DATE	DESCRIPTION
2	5/2/25	CHANGES/PERMIT CORRECTION SET

REVISIONS

MARK STEINKE
STATE OF WASHINGTON
REGISTERED PROFESSIONAL ENGINEER
05/02/2025

ROBISON ENGINEERING, INC
19401 40TH AVE W, SUITE 302
LYNNWOOD, WA 98036
206.364.3343 TEL
RID PROJECT NO.: 1219-001
CONTACT: ARK.STEINKE@

DRAWN: KL
DESIGNED: MHS
CHECKED: PSR
APPROVED: JAY

PROJECT: BRADLEY HEIGHTS APARTMENTS BUILDING H
27TH AVE SE AND 5TH ST SE PUYALLUP, WA

PRMU20240279

ROBISON ENGINEERING, INC
19401 40TH AVE W, SUITE 302
LYNNWOOD, WA 98036
PHONE:(206)364-3343

DATE: 05/02/2025

SHEET TITLE:
POWER PLAN - 2ND & 3RD FLOOR

SHEET NO.
E3.01

COPYRIGHT 2022, ROBISON ENGINEERING, INC.
MSTEINKE G:_RESOURCE FOLDER\STEINKE LEAVENS TEMPLATES\APARTMENT 30X42\E1.00 LIGHTING.DWG 09-26-2022 11:30

UNIT LUMINAIRE SCHEDULE

CALLOUT	SYMBOL	MOUNTING	DESCRIPTION	MODEL	VOLTAGE	TYPE	LAMPING	WATTAGE	NOTES
U1	○	CEILING	4" DOWNLIGHT	DMF: DRD5S-4-R-10-9-30-O	120	0-10V DIMMING	(1) 12W LED 3000K	12	
U2	○	CEILING	4" DOWNLIGHT WET RATED	DMF: DRD5S-4-S-10-9-30-O	120	0-10V DIMMING	(1) 12W LED 3000K	12	
U3	▮	WALL	24" VANITY LIGHT	MAXIM – 52102	120	ELV DIMMING	(1) 16W LED 3000K	16	
U4	⊢○	WALL	SLIM BALCONY LIGHT	MAXIM – 26106BK	120	NON DIMMING	(1) 10W LED 3000K	10	
U5	○	SURFACE	6" FLUSH MOUNT DOWNLIGHT	MAXIM – 57413WTWT	120	0-10V DIMMING	(1) 11W LED 3000K	11	

ACCESSIBILITY NOTES:

1. ALL SWITCHES AND CONTROLS – 15" MIN; 48" MAX TO CONTROL.
2. GENERAL OUTLETS MIN 18" AFF.
3. ALL SWITCHES/CONTROLS ABOVE COUNTERTOPS 48" MAX.
4. ELECTRICAL SUB-PANELS IN UNITS MUST COMPLY WITH ABOVE REACH RANGES.
5. SWITCHES FOR EXHAUST HOODS AND GARBAGE DISPOSALS MUST COMPLY WITH ABOVE REACH RANGES. INSTALL SWITCHES ON FACE OF CABINETS IF REQUIRED TO COMPLY.

APARTMENT NOTES:

City of Puyallup
REVIEW PERMIT
Building | Planning
Engineering | Public Works
Fire | Parks

1. ALL ELECTRICAL WORK SHALL COMPLY WITH ALL LOCAL AND NATIONAL CODES.
2. DEVICE BOXES ON OPPOSITE SIDES OF DEMISING WALLS SHALL BE IN SEPARATE STUD BAYS. PROVIDE BACKING EQUIVALENT TO LOWRY'S OUTLET BOX PADS. CONDUIT FROM ONE UNIT SHALL NOT PASS THROUGH STUDS OF A SHARED WALL(DOUBLE STUDS) FROM AN ADJACENT UNIT(BRIDGING).
3. PROVIDE ARC-FAULT PROTECTION, TAMPER PROOF AND GFCI RECEPTACLES AS REQUIRED BY CODE AND LOCAL AHJ. ARC-FAULT PROTECTION MUST BE PROVIDED FOR CIRCUITS IN THE AREAS LISTED IN NEC 210.12(A).
4. PROVIDE SUFFICIENT DUPLEX RECEPTACLES TO MEET NEC 210.52.
5. THERMOSTATS SHALL NOT INTERFERE WITH DOOR SWINGS.
6. ELECTRICAL CONTRACTOR SHALL MAKE ALL FINAL CONNECTIONS FOR KITCHEN APPLIANCES. COORDINATE ALL J-BOX LOCATIONS WITH APPLIANCE INSTALLATION INSTRUCTIONS PRIOR TO ROUGH-IN.
7. ELECTRICAL CONTRACTOR SHALL FURNISH AND INSTALL CORD AND PLUG ASSEMBLY FOR EACH DISPOSER.
8. PROVIDE A DEDICATED 20 AMP CIRCUIT TO EACH UNIT BATHROOM RECEPTACLE. BATHROOM LIGHTS, FAN TO BE ON SAME CIRCUIT PER 210.11(C)(3) EXCEPTION.
9. HOME RUNS AND LOOPS CONNECTING LIGHT FIXTURES, WIRING DEVICES, AND HVAC EQUIPMENT ON PLANS INDICATE CIRCUITING SCHEME. SEE TYPICAL PANEL SCHEDULES FOR ACTUAL CIRCUIT NUMBERS FOR TYPICAL APARTMENT.
10. LIGHTS WITHIN 3' HORIZONTAL OF SHOWER OR TUB TO BE WET LOCATION RATED AND HAVE FULLY ENCLOSED TRIMS. PROVIDE GFCI PROTECTION IF THE LUMINAIRE INSTALLATION MANUAL STATES IT IS REQUIRED.
11. PROVIDE SMOKE DETECTORS AND CO ALARMS AS REQUIRED. DETECTORS AND ALARMS TO BE HARDWIRED AND PROVIDED WITH BATTERY BACKUP.
12. ELECTRICAL CONTRACTOR SHALL INSTALL RECEPTACLES AND TV, DATA/PHONE OUTLETS UNDER COMMON COVER PLATE WHERE POSSIBLE. PROVIDE AND INSTALL DIVIDERS AS REQUIRED FOR CABLE/POWER SEPARATION.
13. SEE ARCHITECTURAL DRAWINGS FOR DIMENSIONS AND LAYOUTS OF ALL DEVICES.
14. ALL WALL PENETRATIONS SHALL BE CAULKED WITH APPROVED MATERIAL TO MAINTAIN THE FIRE RATING OF ALL WALLS AND FLOORS.
15. ALL CONDUIT SHALL BE INSTALLED IN NEAT SYMMETRICAL LINES HORIZONTAL OR PERPENDICULAR TO BUILDING COLUMNS AND ROOF LINES. CONDUITS SHALL BE GROUPED ON COMMON SUPPORTS WHEREVER POSSIBLE.
16. REFERENCE MECHANICAL DRAWINGS FOR EXACT LOCATION OF ALL MECHANICAL EQUIPMENT.
17. ELECTRICAL CONTRACTOR SHALL VERIFY ALL FUSE RATING WIRE SIZES AND DISCONNECT SIZES WITH EQUIPMENT SERVED ON THE JOB PRIOR TO INSTALLATION.
18. SEE ARCHITECTURAL DRAWINGS AND ELEVATIONS FOR ADDITIONAL DETAILS AND CASEWORK DIMENSIONS.
19. DEVICE LOCATIONS IN 1ST DWELLING/RESIDENT UNIT SHALL BE REVIEWED AND APPROVED BY OWNER PRIOR TO ROUGH-IN OF REMAINING UNITS
20. CONFIRM FINAL LOCATION OF HEATERS AND THERMOSTATS IN FIELD PRIOR TO ROUGH-IN

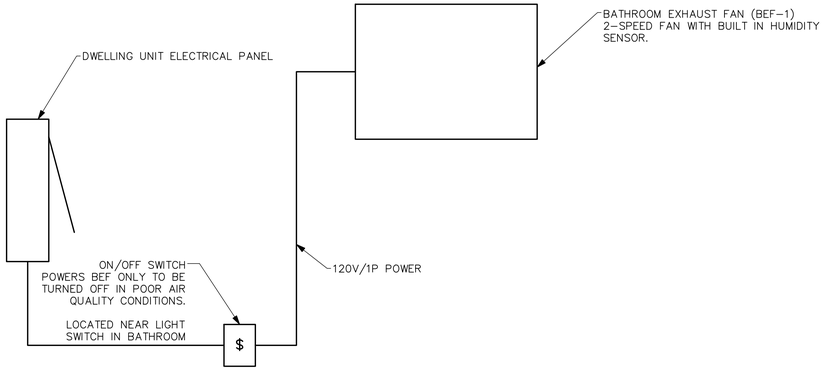

DWELLING UNIT VENTILATION WIRING DIAGRAM
DETAIL

ELECTRIC HEATERS

EQUIP NO.	SERVICE	MOUNTING/ DISCHARGE	HEATING KW	ELECTRICAL VOLTAGE	BASIS OF DESIGN
EWH-1	BEDROOM	WALL	1	208V/1P	(1)
EWH-2	LIVING ROOM	WALL	1.5	208V/1P	(1)

NOTES: (1) BROAN, CADET OR EQUIVALENT.
(2) PROVIDE REMOTE THERMOSTAT.

NO.	DATE	DESCRIPTION
2	5/2/25	CHANGES/PERMIT CORRECTION SET

REVISIONS

MARK STEINKE OF WASHINGTON REGISTERED PROFESSIONAL ENGINEER
05/02/2025

ROBISON ENGINEERING, INC
19401 40TH AVE W, SUITE 302
LYNNWOOD, WA 98036
206.364.3343 tel
REI PROJECT NO.: 1219-001
CONTACT: MIKE STEINKE

DRAWN: KL
DESIGNED: MHS
CHECKED: PSR
APPROVED: JAY

PROJECT: BRADLEY HEIGHTS APARTMENTS BUILDING H
27TH AVE SE AND 5TH ST SE PUYALLUP, WA

ROBISON ENGINEERING, INC
19401 40TH AVE W, SUITE 302
LYNNWOOD, WA 98036
PHONE:(206)364-3343

PRMU20240279

DATE: 05/02/2025

SHEET TITLE: UNIT PLANS NOTES

SHEET NO. E5.00

COPYRIGHT 2022, ROBISON ENGINEERING, INC.
MSTEINKE Q:_RESOURCE FOLDER\STEINKE LEAVENS TEMPLATES\APARTMENT 30X42\E3.00 POWER ENLARGED.DWG 09-26-2022 11:41

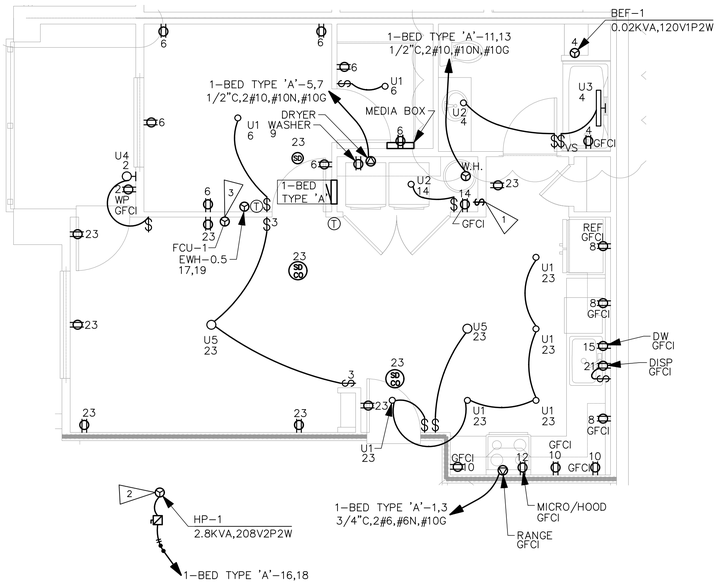

UNIT TYPICALS

1-BED-INT-2 TYPE 'A'

SCALE: 1/4" = 1'-0"

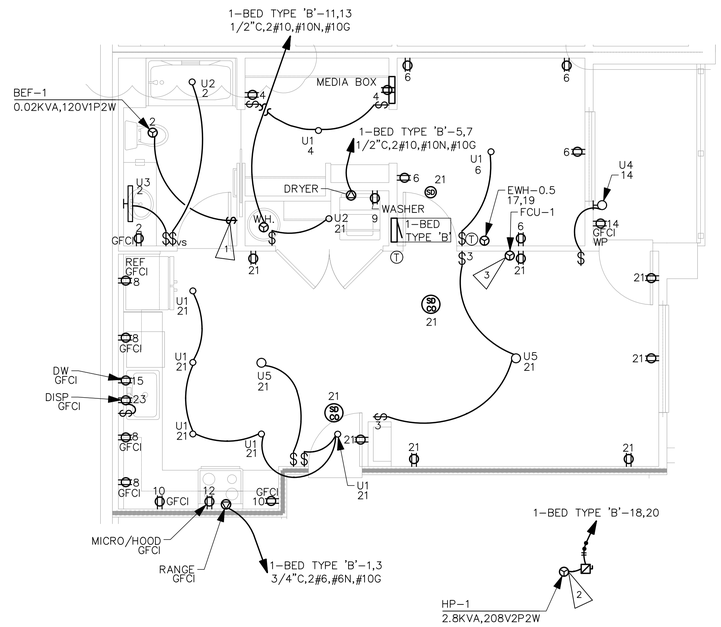

UNIT TYPICALS

1-BED-INT-1 TYPE 'B'

SCALE: 1/4" = 1'-0"

1-BED TYPE 'A'

ROOM
MOUNTING **FLUSH**
FED FROM
NOTE

VOLTS **208/120V 2P 3W**
BUS AMPS **125**
NEUTRAL **100%**

AIC **22,000**
MAIN BKR **MLO**
LUGS **STANDARD**

CKT #	CKT BKR	LOAD KVA	CIRCUIT DESCRIPTION		CKT #	CKT BKR	LOAD KVA	CIRCUIT DESCRIPTION
1	50/2	8	RANGE	a	2	20/1	0.19	LIGHTING, RECEPTACLE
3	|			b	4	20/1	0.23	BEF-1, LIGHTING, RECEPTACLE
5	30/2	4.99	DRYER	a	6	20/1	1.28	LIGHTING, MEDIA BOX, RECEPTACLE
7	|			b	8	20/1	1.5	SMALL APPLIANCE
9	20/1	1.5	WASHER	a	10	20/1	1.5	SMALL APPLIANCE
11	30/2	4.4	WATER HEATER	b	12	20/1	1.58	MICRO/HOOD
13	|			a	14	20/1	0.192	LIGHTING, RECEPTACLE
15	20/1	1.2	DISHWASHER	b	16	20/2	2.8	HP-1
17	20/2	0.5	WALL HEATER	a	18	|		
19	|			b	20	-/1	0	SPACE
21	20/1	0.7	DISPOSAL	a	22	-/1	0	SPACE
23	20/1	1.49	LIGHTING, RECEPTACLE, SDCO	b	24	-/1	0	SPACE

OPTIONAL DWELLING UNIT CALCULATION (NEC 220.82)

	CONN KVA			CONN KVA	CALC KVA	
LIGHTING AND RECEPTACLES	2.61	871 SF (3 VA/SF)	GENERAL LOAD UP TO 10 KVA	10	10	(100%)
SMALL-APPLIANCE	3		OVER 10 KVA	13.6	5.43	(40%)
LAUNDRY	1.5		MAX HEATING OR COOLING		3.19	(220.82(C)(4))
APPLIANCES	8.47					
ELECTRIC COOKING	8					
TOTAL GENERAL LOAD	23.6		TOTAL LOAD		18.6	
			BALANCED LOAD		89.5 A	
			PHASE A		98.3%	
			PHASE B		102%	

1-BED TYPE 'B'

ROOM
MOUNTING **FLUSH**
FED FROM
NOTE

VOLTS **208/120V 2P 3W**
BUS AMPS **125**
NEUTRAL **100%**

AIC **22,000**
MAIN BKR **MLO**
LUGS **STANDARD**

CKT #	CKT BKR	LOAD KVA	CIRCUIT DESCRIPTION		CKT #	CKT BKR	LOAD KVA	CIRCUIT DESCRIPTION
1	50/2	8	RANGE	a	2	20/1	0.23	BEF-1, LIGHTING, RECEPTACLE
3	|			b	4	20/1	0.372	LIGHTING, MEDIA BOX, RECEPTACLE
5	30/2	4.99	DRYER	a	6	20/1	0.912	LIGHTING, RECEPTACLE
7	|			b	8	20/1	1.5	SMALL APPLIANCE
9	20/1	1.5	WASHER	a	10	20/1	1.5	SMALL APPLIANCE
11	30/2	4.4	WATER HEATER	b	12	20/1	1.58	MICRO/HOOD
13	|			a	14	20/1	0.19	LIGHTING, RECEPTACLE
15	20/1	1.2	DISHWASHER	b	16	20/1	0.38	RECEPTACLE, SDCO
17	20/2	0.5	WALL HEATER	a	18	20/2	2.8	HP-1
19	|			b	20	|		
21	20/1	1.5	LIGHTING, RECEPTACLE, SDCO	a	22	-/1	0	SPACE
23	20/1	0.7	DISPOSAL	b	24	-/1	0	SPACE

OPTIONAL DWELLING UNIT CALCULATION (NEC 220.82)

	CONN KVA			CONN KVA	CALC KVA	
LIGHTING AND RECEPTACLES	2.61	871 SF (3 VA/SF)	GENERAL LOAD UP TO 10 KVA	10	10	(100%)
SMALL-APPLIANCE	3		OVER 10 KVA	13.6	5.43	(40%)
LAUNDRY	1.5		MAX HEATING OR COOLING		3.19	(220.82(C)(4))
APPLIANCES	8.47					
ELECTRIC COOKING	8					
TOTAL GENERAL LOAD	23.6		TOTAL LOAD		18.6	
			BALANCED LOAD		89.5 A	
			PHASE A		100%	
			PHASE B		99.7%	

GENERAL NOTES:

1. COORDINATE FINAL LOCATION OF THERMOSTATS, SWITCHES, RECEPTACLES, DATA, PHONE, LIGHT FIXTURES AND J-BOXES WITH ARCHITECTURAL ELEVATIONS AND INTERIOR DESIGN PLANS PRIOR TO ROUGH-IN.
2. ADA UNITS SHALL HAVE HOOD CONTROLS INSTALLED IN THE FACE OF THE LOWER CABINET WORK.
3. PROVIDE TAMPER RESISTANT RECEPTACLES PER NEC 406.12.
4. ALL UNITS: PROVIDE SWITCH CONTROLLING GARBAGE DISPOSAL TO BE LOCATED ABOVE BACKSPLASH NEXT TO SINK OR ON COUNTER. SEE ARCHITECTURE.
5. BATHROOM GFCI RECEPTACLES TO HAVE INTEGRAL NIGHTLIGHT.
6. RECESSED CEILING LIGHT IN BATHROOM SHALL BE LED RATED FOR WET LOCATIONS W/ SHATTER PROOF LENS.
7. ALL RECEPTACLES SHALL MEET REQUIREMENTS OF NEC ARTICLE 210.
8. PROVIDE TELEPHONE & CABLE T.V. MEDIA TERMINATION ENCLOSURE (MEDIA BOX): PROVIDE LEVITON COMPACT MEDIA ENCLOSURE OR EQUVALENT IN WALL WITH TOP NO HIGHTER THAN 60" AFF WITH 120V RECEPTACLE ADJACENT.
9. PROVIDE COMBINATION HARDWIRED 120VAC PHOTOELECTRIC SMOKE DETECTOR AND CARBON MONOXIDE DETECTOR WITH BATTERY-BACKUP
   - DETECTOR SHALL BE MINIMUM 6' HORIZONTAL DISTANCE FROM PERMANENT COOKING APPLIANCE PER CFC 90.2.11.8.
   - DETECTOR SHALL BE MINIMUM 3' HORIZONTAL DISTANCE FROM THE DOOR OF A BATHROOM THAT CONTAINS A BATHTUB OR SHOWER PER CFC 90.2.11.8.
   - PROVIDE INTERCONNECTION WIRING SUCH THAT ACTUATION OF ONE ALARM WILL ACTIVATE ALL ALARMS IN THE DWELLING UNIT.
   - COORDINATE WITH AHJ ON INTERCONNECTING EACH DWELLING UNIT INTO THE FIRE ALARM SYSTEM FOR THE BUILDING.
   - COORDINATE WITH AHJ AS TO THE NUMBER AND LOCATION OF DEVICES PRIOR TO ROUGH-IN. DEVICES SHOWN ARE DIAGRAMMATIC.
10. DISHWASHER OUTLET SHALL BE ACCESSIBLE. RECEPTACLE SHALL BE LOCATED IN SPACE ADJACENT TO THE DISHWASHER.
11. PROVIDE 7-DAY PROGRAMMABLE THERMOSTAT FOR THE LIVING ROOM.

FLAG NOTES

1. INTERLOCK ERV/BEF TO ON/OFF SWITCH. PROVIDE PERMANENT LABEL SAYING, "WHOLE HOUSE VENTILATION. LEAVE ON UNLESS OUTDOOR AIR QUALITY IS VERY POOR." ADHERE PERMANENT LABEL TO WALL ABOVE WALL SWITCH.
2. COORDINATE OUTDOOR LOCATION OF INDIVIDUAL HP UNITS WITH MECHANICAL PLANS.
3. POWERED FROM OUTDOOR UNIT.

AFCI/GFCI REQUIREMENTS FOR DWELLING UNITS:

1. ALL 15 AND 20A, 120V SINGLE PHASE CIRCUITS NOT INCLUDING THE BATHROOM SHALL BE AFCI PROTECTED (210.12).
2. ALL DWELLING UNIT CIRCUITS IN BATHROOMS, GARAGES, OUTDOORS, KITCHENS, LAUNDRY AREAS,AND AREAS WITHIN 6' OF A SINK SHALL BE GFCI PROTECTED (210.8).
   2.1. BATHROOM CIRCUIT TO BE GFCI PROTECTED VIA A GFCI RECEPTACLE, WHILE OTHER CIRCUITS SHALL BE PROTECTED AT THE BREAKER.
3. UTILIZE "DUAL FUNCTION" BREAKER WHEN BOTH AFCI AND GFCI PROTECTION IS REQUIRED.

NO.	DATE	DESCRIPTION
2	5/2/25	CHANGES/PERMIT CORRECTION SET

REVISIONS

MARK STEINKE, STATE OF WASHINGTON, REGISTERED PROFESSIONAL ENGINEER
05/02/2025

ROBISON ENGINEERING, INC
19401 40TH AVE W, SUITE 302
LYNNWOOD, WA 98036
206.364.3343 tel
REI PROJECT NO.: 1219-001
CONTACT: MIKE STRINGER

DRAWN: KL
DESIGNED: MHS
CHECKED: PSR
APPROVED: JAY

PROJECT: BRADLEY HEIGHTS APARTMENTS BUILDING H
27TH AVE SE AND 5TH ST SE PUYALLUP, WA

PRMU20240279

ROBISON ENGINEERING, INC
19401 40TH AVE W, SUITE 302
LYNNWOOD, WA 98036
PHONE:(206)364-3343

DATE: 05/02/2025

SHEET TITLE: UNIT PLANS & SCHEDULES

SHEET NO. E5.01

COPYRIGHT 2022, ROBISON ENGINEERING, INC.
MSTEINKE G:_RESOURCE FOLDER\STEINKE LEAVENS TEMPLATES\APARTMENT 30X42\E3.00 POWER ENLARGED.DWG 09-26-2022 11:41

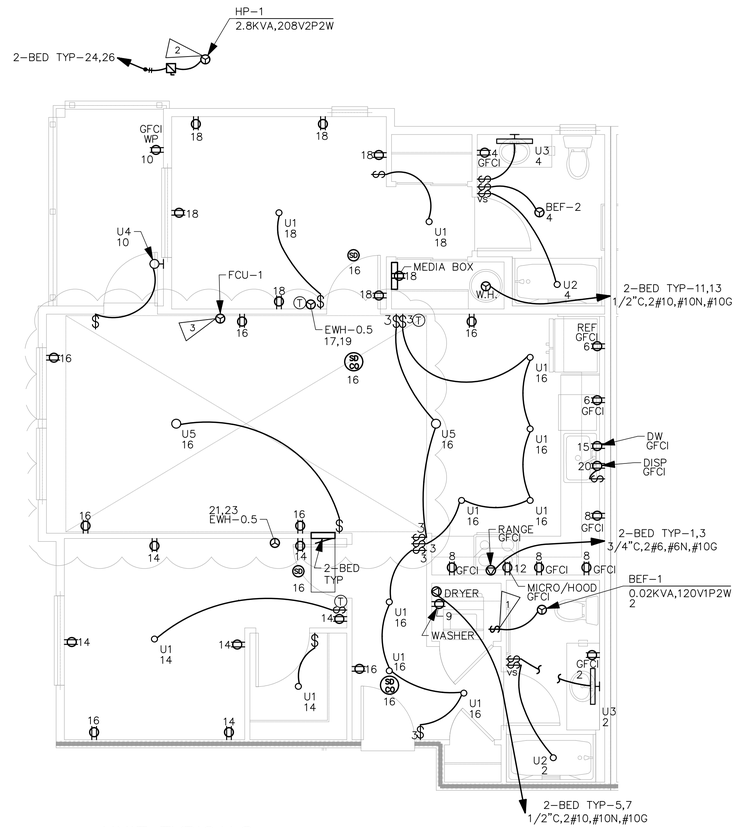

UNIT TYPICALS

2-BED TYP

SCALE: 1/4" = 1'-0"

2-BED TYP

ROOM
MOUNTING **FLUSH**
FED FROM
NOTE

VOLTS **208/120V 2P 3W**
BUS AMPS **125**
NEUTRAL **100%**

AIC **22,000**
MAIN BKR **MLO**
LUGS **STANDARD**

CKT #	CKT BKR	LOAD KVA	CIRCUIT DESCRIPTION		CKT #	CKT BKR	LOAD KVA	CIRCUIT DESCRIPTION
1	50/2	8	RANGE	a	2	20/1	0.23	BEF-1, LIGHTING, RECEPTACLE
3	|			b	4	20/1	0.308	BATH EX FAN, LIGHTING, RECEPTACLE
5	30/2	4.99	DRYER	a	6	20/1	1.5	SMALL APPLIANCE
7	|			b	8	20/1	1.5	SMALL APPLIANCE
9	20/1	1.5	WASHER	a	10	20/1	0.19	LIGHTING, RECEPTACLE
11	30/2	4.4	WATER HEATER	b	12	20/1	1.58	MICRO/HOOD
13	|			a	14	20/1	1.1	LIGHTING, RECEPTACLE
15	20/1	1.2	DISHWASHER	b	16	20/1	1.19	LIGHTING, RECEPTACLE
17	20/2	0.5	WALL HEATER	a	18	20/1	1.28	LIGHTING, MEDIA BOX, RECEPTACLE
19	|			b	20	20/1	0.7	DISPOSAL
21	20/2	0.5	WALL HEATER	a	22	20/1	0.2	SDCO
23	|			b	24	20/2	2.8	HP-1
25	-/1	0	SPACE	a	26	|		

OPTIONAL DWELLING UNIT CALCULATION (NEC 220.82)

	CONN KVA			CONN KVA	CALC KVA	
LIGHTING AND RECEPTACLES	3.52	1,173 SF (3 VA/SF)	GENERAL LOAD UP TO 10 KVA	10	10	(100%)
SMALL-APPLIANCE	3		OVER 10 KVA	6.49	2.6	(40%)
LAUNDRY	1.5		MAX HEATING OR COOLING		3.51	(220.82(C)(4))
APPLIANCES	8.47					
TOTAL GENERAL LOAD	16.5		TOTAL LOAD		16.1	
			BALANCED LOAD		77.4 A	
			PHASE A		98.8%	
			PHASE B		101%	

GENERAL NOTES:

1. COORDINATE FINAL LOCATION OF THERMOSTATS, SWITCHES, RECEPTACLES, DATA, PHONE, LIGHT FIXTURES AND J-BOXES WITH ARCHITECTURAL ELEVATIONS AND INTERIOR DESIGN PLANS PRIOR TO ROUGH-IN.
2. ADA UNITS SHALL HAVE HOOD CONTROLS INSTALLED IN THE FACE OF THE LOWER CABINET WORK.
3. PROVIDE TAMPER RESISTANT RECEPTACLES PER NEC 406.12.
4. ALL UNITS: PROVIDE SWITCH CONTROLLING GARBAGE DISPOSAL TO BE LOCATED ABOVE BACKSPLASH NEXT TO SINK OR ON COUNTER. SEE ARCHITECTURE.
5. BATHROOM GFCI RECEPTACLES TO HAVE INTEGRAL NIGHTLIGHT.
6. RECESSED CEILING LIGHT IN BATHROOM SHALL BE LED RATED FOR WET LOCATIONS W/ SHATTER PROOF LENS.
7. ALL RECEPTACLES SHALL MEET REQUIREMENTS OF NEC ARTICLE 210.
8. PROVIDE TELEPHONE & CABLE T.V. MEDIA TERMINATION ENCLOSURE (MEDIA BOX): PROVIDE LEVITON COMPACT MEDIA ENCLOSURE OR EQUVALENT IN WALL WITH TOP NO HIGHTER THAN 60" AFF WITH 120V RECEPTACLE ADJACENT.
9. PROVIDE COMBINATION HARDWIRED 120VAC PHOTOELECTRIC SMOKE DETECTOR AND CARBON MONOXIDE DETECTOR WITH BATTERY-BACKUP
   - DETECTOR SHALL BE MINIMUM 6' HORIZONTAL DISTANCE FROM PERMANENT COOKING APPLIANCE PER CFC 90.2.11.8.
   - DETECTOR SHALL BE MINIMUM 3' HORIZONTAL DISTANCE FROM THE DOOR OF A BATHROOM THAT CONTAINS A BATHTUB OR SHOWER PER CFC 90.2.11.8.
   - PROVIDE INTERCONNECTION WIRING SUCH THAT ACTUATION OF ONE ALARM WILL ACTIVATE ALL ALARMS IN THE DWELLING UNIT.
   - COORDINATE WITH AHJ ON INTERCONNECTING EACH DWELLING UNIT INTO THE FIRE ALARM SYSTEM FOR THE BUILDING.
   - COORDINATE WITH AHJ AS TO THE NUMBER AND LOCATION OF DEVICES PRIOR TO ROUGH-IN. DEVICES SHOWN ARE DIAGRAMMATIC.
10. DISHWASHER OUTLET SHALL BE ACCESSIBLE. RECEPTACLE SHALL BE LOCATED IN SPACE ADJACENT TO THE DISHWASHER.
11. PROVIDE 7-DAY PROGRAMMABLE THERMOSTAT FOR THE LIVING ROOM.

FLAG NOTES

1. INTERLOCK ERV/BEF TO ON/OFF SWITCH. PROVIDE PERMANENT LABEL SAYING, "WHOLE HOUSE VENTILATION. LEAVE ON UNLESS OUTDOOR AIR QUALITY IS VERY POOR." ADHERE PERMANENT LABEL TO WALL ABOVE WALL SWITCH.
2. COORDINATE OUTDOOR LOCATION OF INDIVIDUAL HP UNITS WITH MECHANICAL PLANS.
3. POWERED FROM OUTDOOR UNIT.

AFCI/GFCI REQUIREMENTS FOR DWELLING UNITS:

1. ALL 15 AND 20A, 120V SINGLE PHASE CIRCUITS NOT INCLUDING THE BATHROOM SHALL BE AFCI PROTECTED (210.12).
2. ALL DWELLING UNIT CIRCUITS IN BATHROOMS, GARAGES, OUTDOORS, KITCHENS, LAUNDRY AREAS,AND AREAS WITHIN 6' OF A SINK SHALL BE GFCI PROTECTED (210.8).
   - 2.1. BATHROOM CIRCUIT TO BE GFCI PROTECTED VIA A GFCI RECEPTACLE, WHILE OTHER CIRCUITS SHALL BE PROTECTED AT THE BREAKER.
3. UTILIZE "DUAL FUNCTION" BREAKER WHEN BOTH AFCI AND GFCI PROTECTION IS REQUIRED.

NO.	DATE	DESCRIPTION
2	5/2/25	CHANGES/PERMIT CORRECTION SET

REVISIONS

MARK STEINKE, STATE OF WASHINGTON, REGISTERED PROFESSIONAL ENGINEER
05/02/2025

ROBISON ENGINEERING, INC
19401 40TH AVE W, SUITE 302
LYNNWOOD, WA 98036
206.364.3343
REI PROJECT NO.: 1219-001
CONTACT: MIKE STEINKE

DRAWN: KL
DESIGNED: MHS
CHECKED: PSR
APPROVED: JAY

PROJECT: BRADLEY HEIGHTS APARTMENTS BUILDING H
27TH AVE SE AND 5TH ST SE PUYALLUP, WA

PRMU20240279

ROBISON ENGINEERING, INC
19401 40TH AVE W, SUITE 302
LYNNWOOD, WA 98036
PHONE:(206)364-3343

DATE: 05/02/2025

SHEET TITLE: UNIT PLANS & SCHEDULES

SHEET NO. E5.02

COPYRIGHT 2022, ROBISON ENGINEERING, INC.
MSTEINKE G:_RESOURCE FOLDER\STEINKE LEAVENS TEMPLATES\APARTMENT 30X42\E3.00 POWER ENLARGED.DWG 09-26-2022 11:41

REQUIRED ELECTRIC VEHICLE CHARGING INFRASTRUCTURE WAC 427:

- WHERE PARKING IS PROVIDED, TEN PERCENT OF PARKING SPACES SHALL BE PROVIDED WITH ELECTRIC VEHICLE CHARGING INFRASTRUCTURE.
- ELECTRICAL ROOM(S) SERVING PARKING AREAS SHALL BE DESIGNED TO ACCOMMODATE THE ELECTRICAL EQUIPMENT AND DISTRIBUTION REQUIRED TO SERVE A MINIMUM OF 20 PERCENT OF THE TOTAL PARKING SPACES WITH 208/240 V 40–AMP ELECTRIC VEHICLE CHARGING INFRASTRUCTURE.
- MINIMUM ONE ACCESSIBLE PARKING SPACE SHALL BE SERVED BY ELECTRIC VEHICLE CHARGING INFRASTRUCTURE.

TOTAL NUMBER OF PARKING SPACES = 354
AVERAGE NUMBER OF PARKING SPACES PER BUILDING = 354/8 =45 ;
45 x 0.2 = 9
5 OUTDOOR EV CHARGERS WITH INFRASTRUCTURE
4 CONDUITS TO FUTURE EV CHARGING LOCATIONS

CAPACITY FOR 9 CHARGERS x 208V/1PH x 40A = 74.9 KVA = (208)A 3 PHASE POWER @ 120/208V
UTILIZING LOAD MANAGEMENT INFRASTRUCTURE, EV LOAD CAN BE REDUCED BY 50%. 208A/2 =37.5KVA (104)A @ 208V 3 PHASE

PER WAC 427, ELECTRICAL INFRASTRUCTURE FOR EACH BUILDING SHALL BE DESIGNED TO ACCOMMODATE 104 AMPS OF EV ELECTRICAL LOAD.

GROUNDING NOTES AND REQUIREMENTS:

THE ELECTRICAL CONTRACTOR SHALL COORDINATE WITH THE GENERAL CONTRACTOR, POWER COMPANY, PHONE COMPANY, INTERNET COMPANY, CABLE TV COMPANY, AND THE SATELLITE TV COMPANY TO ENSURE REQUIRED GROUNDING IS INSTALLED FOR EACH SYSTEM.

THIS SHALL BE DONE PRIOR TO AND DURING INSTALLATION OF FOUNDATION RE–BAR AND CONTINUE DURING THE CONSTRUCTION PHASES, TO ENSURE EACH SYSTEM HAS IT'S REQUIRED GROUNDING INSTALLED FOR PROPER OPERATION OF THE SYSTEM.

1. THE ELECTRICAL CONTRACTOR SHALL COORDINATE AND PROVIDE WHAT IS REQUIRED TO DO THE FOLLOWING:
2. FOOTING GROUND RE–BAR COMES UP IN THE ELECTRICAL ROOM AND THE RE–BAR IS SNUGLY SECURED TO THE FOOTING RE–BAR.
3. THE MSB GROUNDING TIES TO THE FOOTING RE–BAR, COUNTERPOISE, BUILDING STEEL, AND WATER PIPING.
4. THE GROUND WIRE FOR THE COUNTERPOISE SHALL BE STRANDED, INSULATED WIRE IN CONDUIT UNTIL IT REACHES THE FIRST BAR OF THE COUNTERPOISE. BETWEEN THE COUNTERPOISE BARS IT SHALL BE A STRANDED BARE COPPER WIRE.

GENERAL FEEDER SCHEDULE

ID	*FEEDER AMPS*	*CONDUIT AND FEEDER*	*FEEDING THESE DEVICES*
1	100	1–1/2"C,3#1/0 AL,#1/0 AL N,#6 AL G	POOL
2	125	2"C,3#2/0 AL,#2/0 AL N,#4 AL G	AM–B
3	200	2"C,3#3/0,#3/0N,#6G	A–HOUSE, B–HOUSE, C–HOUSE, D–HOUSE, E–HOUSE, F–HOUSE, G–HOUSE, H–HOUSE
4	400	(2)2–1/2"C,3#250kcmil AL,#250kcmil AL N,#1/0 AL G	AM–CT
5	400	(2)2–1/2"C,3#250kcmil AL,#250kcmil AL N,#1 AL G	AM–DISC
6	400	3–1/2"C,3#500kcmil,#500kcmil N,#2G	AM–A
7	800	(3)3"C,3#400kcmil AL,#400kcmil AL N,#4/0 AL G	B–MC
8	1000	(4)3"C,3#350kcmil AL,#350kcmil AL N,#4/0 AL G	H–MC
9	1200	(4)3–1/2"C,3#500kcmil AL,#500kcmil AL N,#250kcmil AL G	A–MC, C–MC, D–MC, E–MC, F–MC, G–MC
11	125	1–1/2"C,2#2/0 AL,#2/0 AL N,#4 AL G	A–001, A–002, A–003, A–004, A–101, A–102, A–103, A–104, A–105, A–106, A–107, A–108, A–201, A–202, A–203, A–204, A–205, A–206, A–207, A–208, A–301, A–302, A–303, A–304, A–305, A–306, A–307, A–308, B–001, B–002, B–101, B–102, B–103, B–104, B–201, B–202, B–203, B–204, B–301, B–302, B–303, B–304, C–101, C–102, C–103, C–104, C–105, C–106, C–107, C–108, C–109, C–110, C–111, C–112, C–201, C–202, C–203, C–204, C–205, C–206, C–207, C–208, C–209, C–210, C–211, C–212, C–301, C–302, C–303, C–304, C–305, C–306, C–307, C–308, C–309, C–310, C–311, C–312, D001, D002, D003, D004, D005, D006, D101, D102, D103, D104, D105, D106, D107, D108, D109, D110, D111, D112, D201, D202, D203, D204, D205, D206, D207, D208, D209, D210, D211, D212, D301, D302, D303, D304, D305, D306, D307, D308, D309, D310, D311, D312, E001, E002, E003, E004, E101, E102, E103, E104, E105, E106, E107, E108, E201, E202, E203, E204, E205, E206, E207, E208, E301, E302, E303, E304, E305, E306, E307, E308, F001, F002, F003, F004, F101, F102, F103, F104, F105, F106, F107, F108, F201, F202, F203, F204, F205, F206, F207, F208, F301, F302, F303, F304, F305, F306, F307, F308, G101, G102, G103, G104, G105, G106, G107, G108, G109, G110, G111, G112, G201, G202, G203, G204, G205, G206, G207, G208, G209, G210, G211, G212, G301, G302, G303, G304, G305, G306, G307, G308, G309, G310, G311, G312, H101, H102, H103, H104, H105, H106, H107, H108, H201, H202, H203, H204, H205, H206, H207, H208, H301, H302, H303, H304, H305, H306, H307, H308

SIZING METHOD: COPPER, 60°C #12 THROUGH #1, 75°C 1/0 AND ABOVE

FEEDER SCHEDULE NOTES:
CONDUIT FILL:
* FOR CONDUIT SIZES 1–1/2" AND BELOW, FILL IS BASED ON EMT.
* FOR CONDUIT SIZES 2" AND ABOVE, FILL IS BASED ON SCHEDULE 40 PVC.

IN LOCATIONS APPROVED FOR THE PURPOSE, CONTRACTOR MAY USE MC CABLE.
IN LOCATIONS APPROVED FOR THE PURPOSE CONTRACTOR MAY USE OTHER CONDUIT TYPES, INCLUDING RMC, FMC AND LFMC. CONTRACTOR REQUIRED TO ENSURE CONDUIT FILL DOES NOT EXCEED 40%.

CONTRACTOR RESPONSIBLE TO ENSURE TERMINATION/LUG CAPACITY FOR ALL SCHEDULED FEEDERS.

XHHW/THHN/THWN SHALL BE USED FOR INSULATION OF THE CONDUCTOR.

COORDINATION AND ARC FLASH STUDIES:

IMMEDIATELY UPON SELECTION OF ACTUAL EQUIPMENT BEING PROVIDED FOR THE PROJECT, THE ELECTRICAL CONTRACTOR SHALL PERFORM AN ARC FLASH ANALYSIS AND COORDINATION STUDY ON THE STANDBY DISTRIBUTION BASED ON ACTUAL EQUIPMENT TO BE PROVIDED, CONDUCTOR TYPES/SIZES/LENGTHS, ETC. COORDINATION SHALL BE CONFIRMED BASED ON FAULT NUMBERS SHOWN ON THIS DRAWING.

STUDIES SUBMITTED SHALL BE STAMPED BY A PROFESSIONAL ELECTRICAL ENGINEER HOLDING A CURRENT LICENSE FROM THE STATE OF WA.

PRELIMINARY ARC FLASH AND COORDINATION STUDIES ARE TO BE SUBMITTED WITH THE SUBMITTALS FOR THE PROTECTIVE DEVICES, PANELBOARDS, SWITCHBOARDS, AND OTHER ELECTRICAL EQPT.

THE ELECTRICAL CONTRACTOR SHALL SUBMIT THE STAMPED AND SIGNED ARC FLASH AND COORDINATION STUDY TO THE AHJ AS REQUIRED.

THE ELECTRICAL CONTRACTOR SHALL PROVIDE AND INSTALL PERMANENT LABELS INDICATING ARC FLASH HAZARD RISK CATEGORIES ON ALL DISTRIBUTION POINTS (SWITCHBOARDS, PANELBOARDS, VFDS, DISCONNECT SWITCHES, ETC). LABELS SHALL COMPLY WITH NFPA 70E.

SHEET NOTES:

A. CONTRACTOR TO OBTAIN UTILITY APPROVAL OF ALL SERVICE AND METERING EQUIPMENT PRIOR TO ORDERING.

B. DISTRIBUTION SYSTEM AS DESIGNED IS FULLY RATED. CONTRACTOR WILL BE RESPONSIBLE FOR ENGINEERING IF SERIES RATED SYSTEMS ARE SUBMITTED, THE SUBMITTED SYSTEM SHALL MEET NEC 240.86(B) REQUIREMENTS FOR TESTED COMBINATIONS, AND SHALL NOT BE USED IF MOTOR CONTRIBUTION EXCEEDS LIMITS PER 240.86(C). NEC 110.22 MARKING REQUIREMENTS MUST BE MET.

C. PROVIDE PERMANENT WARNING LABELS FOR ARC FLASH AND PPE REQUIREMENTS FOR THE SERVICE EQUIPMENT AND PANELS.

FLAG NOTES:

1. GROUNDING ELECTRODE CONDUCTOR AND SYSTEM GROUNDING SIZED PER N.E.C. 250
2. PROVIDE ARC ENERGY REDUCTION: ENERGY REDUCING MAINTENANCE SWITCH PER NEC 240.87(B)(3)
3. PROVIDE A LISTED SURGE PROTECTIVE DEVICE FOR DWELLING UNITS AS REQUIRED BY NEC 230.67. CONTRACTOR TO CONFIRM LOCATION IS ACCEPTABLE TO AUTHORITY HAVING JURISDICTION. OBTAIN PRICING FOR OPTION TO HAVE SPDs LOCATED IN UNIT PANELS VS UPSTREAM.
4. METER ELEVATIONS AND METERS PER STACK SHALL BE INSTALLED PER UTILITY ELECTRICAL PROVIDER REQUIREMENTS . METER SOCKET IN ELECTRICAL ROOM. VERIFY EXACT LOCATION AND REQUIREMENTS WITH ELECTRIC UTILITY (TYPICAL)
5. PROVIDE (1) 2 1/2" CONDUITS FOR SOLAR READY PATHWAY AND RESERVE SPACE IN THE MAIN ELECTRIC ROOM FOR FUTURE SOLAR EQUIPMENT. RESERVE SPACE FOR INSTALLATION OF FUTURE SOLAR CIRCUIT BREAKER AND PERMANENTLY MARK THIS LOCATION AS "FOR FUTURE SOLAR ELECTRIC".

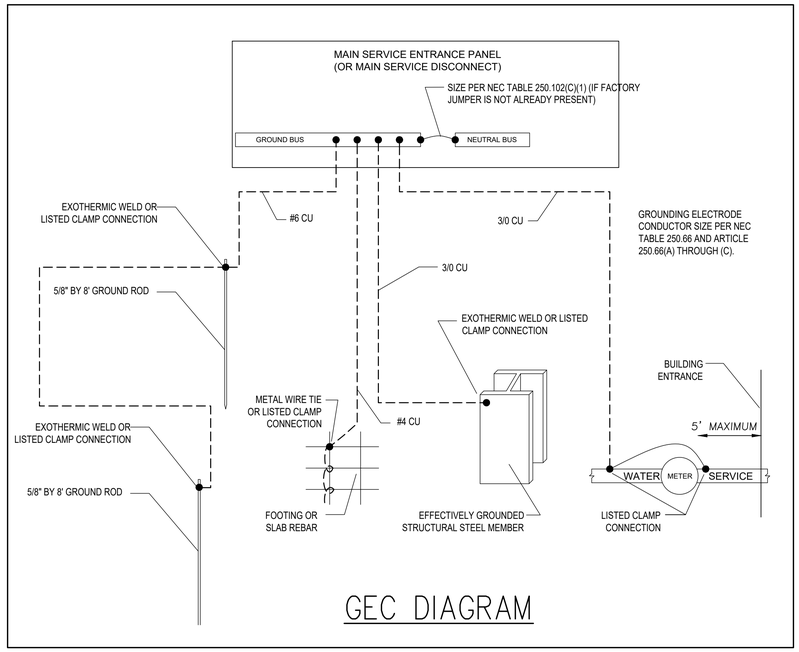

GEC DIAGRAM

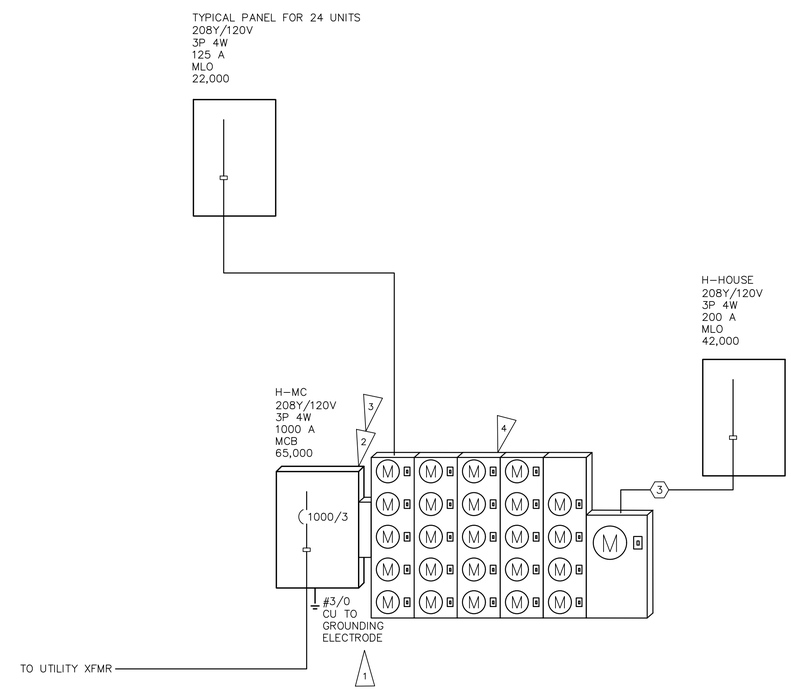

ONE–LINE DIAGRAM

NO.	DATE	DESCRIPTION
2	5/2/25	CHANGES/PERMIT CORRECTION SET

REVISIONS

MARK STEINKE, STATE OF WASHINGTON, REGISTERED PROFESSIONAL ENGINEER
05/02/2025

ROBISON ENGINEERING, INC
19401 40TH AVE W, SUITE 302
LYNNWOOD, WA 98036
206.364.3343 tel
REI PROJECT NO.: 1219001
CONTACT: MIKE KERNELL

DRAWN: KL
DESIGNED: MHS
CHECKED: PSR
APPROVED: JAY

PROJECT: BRADLEY HEIGHTS APARTMENTS BUILDING H
27TH AVE SE AND 5TH ST SE PUYALLUP, WA

ROBISON ENGINEERING, INC
19401 40TH AVE W, SUITE 302
LYNNWOOD, WA 98036
PHONE:(206)364-3343

PRMU20240279

DATE: 05/02/2025

SHEET TITLE: ONE-LINE DIAGRAM & NOTES

SHEET NO. E6.00

COPYRIGHT 2023, ROBISON ENGINEERING, INC.
MSTEINKE G:_RESOURCE FOLDER\STEINKE LEAVENS TEMPLATES\APARTMENT 30X42\E5.00 ONE LINE.DWG 10–03–2022 10:41

VOLTAGE DROP SCHEDULE

DEVICE	FEEDER		BRANCH CIRCUIT		TOTAL VOLTAGE DROP
	VOLTAGE DROP	WIRE SIZE	MAX VOLTAGE DROP	WIRE SIZE	
XFMR A/B/C	0%		–	–	0%
A–MC	1.61%	(4)#500kcmil AL	–	–	1.61%
A–HOUSE	1.93%	#3/0	1.06% (CKT 19)	#10	2.99%
B–MC	0.51%	(3)#400kcmil AL	–	–	0.51%
B–HOUSE	0.79%	#3/0	1.4% (CKT 3)	#10	2.18%
C–MC	0.74%	(4)#500kcmil AL	–	–	0.74%
C–HOUSE	0.91%	#3/0	1.56% (CKT 7)	#10	2.48%
XFMR D/CLUB	0%		–	–	0%
AM–CT	0.35%	(2)#250kcmil AL	–	–	0.35%
AM–DISC	0.57%	(2)#250kcmil AL	–	–	0.57%
AM–A	0.85%	#500kcmil	1.95% (CKT 41)	#12	2.79%
AM–B	2.33%	#2/0 AL	2.18% (CKT 33,35)	#8	4.51%
POOL	0.89%	#1/0 AL–1	0.28% (CKT 1)	#12	1.18%
D–MC	2.76%	(5)#600kcmil AL	–	–	2.76%
D–HOUSE	***3.01%***	#3/0	1.52% (CKT 21)	#10	4.53%
XFMR E/H	0%		–	–	0%
E–MC	0.64%	(4)#500kcmil AL	–	–	0.64%
E–HOUSE	0.82%	#3/0	1.1% (CKT 19)	#10	1.92%
H–MC	0.97%	(4)#350kcmil AL	–	–	0.97%
H–HOUSE	1.11%	#3/0	1.1% (CKT 17)	#10	2.21%
XFMR F/G	0%		–	–	0%
F–MC	1.6%	(4)#500kcmil AL	–	–	1.6%
F–HOUSE	1.85%	#3/0	1.1% (CKT 19)	#10	2.95%
G–MC	0.54%	(4)#500kcmil AL	–	–	0.54%
G–HOUSE	0.71%	#3/0	1.52% (CKT 21)	#10	2.23%

FAULT CURRENT SCHEDULE

DEVICE	FAULT	AIC RATING	UTILITY	FED FROM		FEEDER		TOTAL MOTOR
			FAULT	DEVICE	FAULT	SIZE	LENGTH	FAULT
XFMR A/B/C	64,515	N/A	60,300					4,215
A–MC	35,355	65,000	33,084	XFMR A/B/C	60,300	(4)#500kcmil AL	126'	2,271
A–HOUSE	23,930	42,000	22,899	A–MC	33,084	#3/0	21'	1,031
B–MC	38,026	65,000	36,129	XFMR A/B/C	60,300	(3)#400kcmil AL	70'	1,897
B–HOUSE	26,195	42,000	25,329	B–MC	36,129	#3/0	18'	866
C–MC	45,210	65,000	42,184	XFMR A/B/C	60,300	(4)#500kcmil AL	68'	3,026
C–HOUSE	29,061	42,000	27,827	C–MC	42,184	#3/0	19'	1,234
XFMR D/CLUB	42,183	N/A	39,700					2,483
AM–CT	10,600	42,000	10,279	XFMR D/CLUB	39,700	(2)#250kcmil AL	180'	321
AM–DISC	9,613	42,000	9,311	AM–CT	10,279	(2)#250kcmil AL	23'	302
AM–A	8,641	22,000	8,350	AM–DISC	9,311	#500kcmil	33'	291
AM–B	3,955	22,000	3,774	AM–A	8,350	#2/0 AL	108'	181
POOL	7,226	22,000	7,025	AM–A	8,350	#1/0 AL–1	14'	201
D–MC	33,991	65,000	31,558	XFMR D/CLUB	39,700	(5)#600kcmil AL	83'	2,433
D–HOUSE	24,675	42,000	23,388	D–MC	31,558	#3/0	19'	1,287
XFMR E/H	42,497	N/A	39,700					2,797
E–MC	25,915	65,000	23,937	XFMR E/H	39,700	(4)#500kcmil AL	155'	1,978
E–HOUSE	19,299	42,000	18,197	E–MC	23,937	#3/0	21'	1,102
H–MC	29,457	65,000	27,480	XFMR E/H	39,700	(4)#350kcmil AL	92'	1,977
H–HOUSE	18,568	42,000	17,791	H–MC	27,480	#3/0	30'	777
F–MC	31,879	65,000	29,797	XFMR F/G	60,300	(4)#500kcmil AL	155'	2,082
F–HOUSE	19,185	42,000	18,353	F–MC	29,797	#3/0	31'	832
G–MC	27,460	65,000	25,243	XFMR F/G	60,300	(4)#500kcmil AL	207'	2,217
G–HOUSE	20,163	42,000	18,965	G–MC	25,243	#3/0	20'	1,198

H–HOUSE

ROOM
MOUNTING **SURFACE**
FED FROM **H–MC**
NOTE

VOLTS **208Y/120V 3P 4W**
BUS AMPS **200**
NEUTRAL **100%**

AIC **42,000**
MAIN BKR **MLO**
LUGS **STANDARD**

CKT #	CKT BKR	LOAD KVA	CIRCUIT DESCRIPTION		CKT #	CKT BKR	LOAD KVA	CIRCUIT DESCRIPTION
1	20/1	0.294	LIGHTING	a	2	50/2	8.3	EV CHARGER
3	20/1	0.294	LIGHTING	b	4	|		
5	20/2	1	EWH	c	6	50/2	8.3	EV CHARGER
7	|			a	8	|		
9	20/1	0.18	RECEPTACLE	b	10	50/2	8.3	(F) EV CHARGER
11	–/1	0	SPACE	c	12	|		
13	20/1	0.18	RECEPTACLE	a	14	50/2	8.3	(F) EV CHARGER
15	20/1	0.096	LIGHTING	b	16	|		
17	20/1	0.5	FACP	c	18	20/1	0.1	CARPORT POWER
19	20/1	0.072	SITE LIGHTING	a	20	–/1	0	SPACE
21	–/1	0	SPACE	b	22	–/1	0	SPACE
23	–/1	0	SPACE	c	24	–/1	0	SPACE
25	–/1	0	SPACE	a	26	–/1	0	SPACE
27	–/1	0	SPACE	b	28	–/1	0	SPACE
29	–/1	0	SPACE	c	30	–/1	0	SPACE
31	–/1	0	SPACE	a	32	–/1	0	SPACE
33	–/1	0	SPACE	b	34	–/1	0	SPACE
35	–/1	0	SPACE	c	36	–/1	0	SPACE
37	–/3	0	SOLAR BREAKER	a	38	–/1	0	SPACE
39	|			b	40	–/1	0	SPACE
41	|			c	42	–/1	0	SPACE

	CONN KVA	CALC KVA	
LIGHTING	0.756	0.945	(125%)
RECEPTACLES	0.36	0.36	(50%>10)
EV LOAD	33.2	20.8	(63%)

	CONN KVA	CALC KVA	
CONTINUOUS	0.5	0.625	(125%)
NONCONTINUOUS	0.1	0.1	(100%)
HEATING	1	1	(100%)
TOTAL LOAD		23.8	
BALANCED 3–PHASE LOAD		66 A	
PHASE A		113%	
PHASE B		109%	
PHASE C		77.7%	

H–MC

ROOM
MOUNTING **SURFACE**
FED FROM **XFMR E/H**
NOTE

VOLTS **208Y/120V 3P 4W**
BUS AMPS **1000**
NEUTRAL **100%**

AIC **65,000**
MAIN BKR **1000**
LUGS **STANDARD**

CKT #	BREAKER TRIP/POLES	CIRCUIT DESCRIPTION	LOAD KVA A	LOAD KVA B	LOAD KVA C	FEEDER RACEWAY AND CONDUCTORS
1	125/2	PANEL H101	16.2	16.1		1–1/2"C,2#2/0 AL,#2/0 AL N,#4 AL G
2	125/2	PANEL H102		16.2	16.1	1–1/2"C,2#2/0 AL,#2/0 AL N,#4 AL G
3	125/2	PANEL H103	16.1		16.2	1–1/2"C,2#2/0 AL,#2/0 AL N,#4 AL G
4	125/2	PANEL H104	16.2	16.1		1–1/2"C,2#2/0 AL,#2/0 AL N,#4 AL G
5	125/2	PANEL H105		16.2	16.1	1–1/2"C,2#2/0 AL,#2/0 AL N,#4 AL G
6	125/2	PANEL H106	17.1		16.6	1–1/2"C,2#2/0 AL,#2/0 AL N,#4 AL G
7	125/2	PANEL H107	16.2	16.1		1–1/2"C,2#2/0 AL,#2/0 AL N,#4 AL G
8	125/2	PANEL H108		16.6	17.1	1–1/2"C,2#2/0 AL,#2/0 AL N,#4 AL G
9	125/2	PANEL H201	16.1		16.2	1–1/2"C,2#2/0 AL,#2/0 AL N,#4 AL G
10	125/2	PANEL H202	16.2	16.1		1–1/2"C,2#2/0 AL,#2/0 AL N,#4 AL G
11	125/2	PANEL H203		16.2	16.1	1–1/2"C,2#2/0 AL,#2/0 AL N,#4 AL G
12	125/2	PANEL H204	16.1		16.2	1–1/2"C,2#2/0 AL,#2/0 AL N,#4 AL G
13	125/2	PANEL H205	16.2	16.1		1–1/2"C,2#2/0 AL,#2/0 AL N,#4 AL G
14	125/2	PANEL H206		16.6	17.1	1–1/2"C,2#2/0 AL,#2/0 AL N,#4 AL G
15	125/2	PANEL H207	16.1		16.2	1–1/2"C,2#2/0 AL,#2/0 AL N,#4 AL G
16	125/2	PANEL H208	16.6	17.1		1–1/2"C,2#2/0 AL,#2/0 AL N,#4 AL G
17	125/2	PANEL H301		16.2	16.1	1–1/2"C,2#2/0 AL,#2/0 AL N,#4 AL G
18	125/2	PANEL H302	16.1		16.2	1–1/2"C,2#2/0 AL,#2/0 AL N,#4 AL G
19	125/2	PANEL H303	16.2	16.1		1–1/2"C,2#2/0 AL,#2/0 AL N,#4 AL G
20	125/2	PANEL H304		16.2	16.1	1–1/2"C,2#2/0 AL,#2/0 AL N,#4 AL G
21	125/2	PANEL H305	16.1		16.2	1–1/2"C,2#2/0 AL,#2/0 AL N,#4 AL G
22	125/2	PANEL H306	16.6	17.1		1–1/2"C,2#2/0 AL,#2/0 AL N,#4 AL G
23	125/2	PANEL H307		16.2	16.1	1–1/2"C,2#2/0 AL,#2/0 AL N,#4 AL G
24	125/2	PANEL H308	17.1		16.6	1–1/2"C,2#2/0 AL,#2/0 AL N,#4 AL G
25	200/3	PANEL H–HOUSE	13.5	13	9.4	2"C,3#3/0,#3/ON,#6G
		TOTAL CONNECTED KVA BY PHASE	274	274	270	

OPTIONAL MULTIFAMILY DWELLING CALCULATION (NEC 220.84)

DWELLING UNIT LOADS

	KVA			KVA
LIGHTING AND RECEPTACLES	68.1	22,705 SF (3 VA/SF)	CONNECTED LOAD	644
SMALL–APPLIANCE	72		DWELLING UNITS	24
LAUNDRY	36		DEMAND FACTOR	(35%)
APPLIANCES	203		CALCULATED LOAD	225
ELECTRIC COOKING	144			
HEATING	121	(100%)		

HOUSE LOADS

	CONN KVA	CALC KVA			CONN KVA	CALC KVA	
LIGHTING	0.756	0.945	(125%)	CONTINUOUS	0.5	0.625	(125%)
RECEPTACLES	0.36	0.36	(50%>10)	NONCONTINUOUS	0.1	0.1	(100%)
EV LOAD	33.2	20.8	(63%)	HEATING	1	1	(100%)
				TOTAL HOUSE LOAD		23.8	

TOTAL LOAD

	KVA		KVA
TOTAL DWELLING UNIT LOAD	225	TOTAL LOAD	249
TOTAL HOUSE LOAD	23.8	BALANCED 3–PHASE LOAD	692 A

City of Puyallup
Development & Permitting Services
930-05-01-0001
Building | Planning
Engineering | Public Works
Fire | Parks

NO.	DATE	DESCRIPTION
2	5/2/25	CHANGES/PERMIT CORRECTION SET

REVISIONS

MARK STEINKE
STATE OF WASHINGTON
REGISTERED PROFESSIONAL ENGINEER
05/02/2025

ROBISON ENGINEERING, INC
19401 40TH AVE W., SUITE 302
LYNNWOOD, WA 98036
206.364.5343 tel
REI PROJECT NO.: 1219-001
CONTACT: ARON STRINGER

DRAWN: KL
DESIGNED: MHS
CHECKED: PSR
APPROVED: JAY

PROJECT: BRADLEY HEIGHTS APARTMENTS BUILDING H
27TH AVE SE AND 5TH ST SE PUYALLUP, WA

ROBISON ENGINEERING, INC
19401 40TH AVE W., SUITE 302
LYNNWOOD, WA 98036
PHONE:(206)3643343

PRMU20240279

DATE: 05/02/2025

SHEET TITLE: PANELS SCHEDULES

SHEET NO. E6.01

COPYRIGHT 2023, ROBISON ENGINEERING, INC.
MSTEINKE G:_RESOURCE FOLDER\STEINKE LEAVENS TEMPLATES\APARTMENT 30X42\E5.00 ONE LINE.DWG 10–03–2022 10:41

GENERAL NOTES

1. REFERENCE TO RELATED WORK: "REF" INDICATIONS DENOTE WORK COVERED ELSEWHERE (ARCHITECTURAL, STRUCTURAL, CIVIL, ELECTRICAL, LANDSCAPE, OR KITCHEN), OR ITEM BASED ON A SPECIFIC MANUFACTURER'S DIMENSIONS (VERIFY).
2. ELECTRICAL CHARACTERISTICS: REFER TO ELECTRICAL DRAWINGS FOR ELECTRICAL CHARACTERISTICS (VOLTAGES, ETC. OF MECHANICAL EQUIPMENT, UNLESS OTHERWISE INDICATED.
3. CODES: COMPLETE INSTALLATION OF THE PLUMBING SYSTEM SHALL BE PER THE APPLICABLE BUILDING, MECHANICAL, ENERGY, PLUMBING, FIRE, AND HEALTH CODES AND REGULATIONS AS ADOPTED BY THE LOCAL AHJ.
4. PREPARE AND SUBMIT FOR REVIEW A SHOP DRAWING BASED ON FINAL STRUCTURAL SHOP DRAWINGS FOR LOCATING AND ROUTING ALL EQUIPMENT, PIPING, ETC.
   A. COORDINATE FLOOR AND BEAM PENETRATIONS WITH STRUCTURAL.
   B. COORDINATE FINAL LOCATION AND ROUTING WITH CEILING, LIGHTS, WALLS, FIRE SPRINKLER PIPING, AND OTHER TRADES WORK.
   C. INCLUDE ADDITIONAL OFFSETS, ELBOWS, ROUTING, EQUIVALENT DUCT SIZING EXCHANGE, RELOCATING, ETC. AS REQUIRED FOR A COMPLETE OPERATING MECHANICAL SYSTEM.
   D. PROVIDE SHOP DRAWINGS AT NO ADDITIONAL COST TO THE OWNER.
5. PLUMBING CONTRACTOR SHALL LOCATE AND COORDINATE EXACT LOCATION OF ALL PLUMBING EQUIPMENT WITHIN THE STRUCTURE.
6. ACCESS DOORS: COORDINATE WITH ARCHITECT AND LOCATE ALL ACCESS DOORS ON SHOP DRAWINGS PRIOR TO BEGINNING OF CONSTRUCTION. ACCESS DOORS IN FIRE RATED STRUCTURE SHALL BE FIRE RATED. VERIFY ACCESS DOOR LOCATIONS WITH GENERAL CONTRACTOR PRIOR TO BIDDING.
7. ROOF PENETRATIONS: SEE ARCHITECTURAL DRAWINGS FOR ROOF CAP, ROOF CURB, ROOF DRAIN, OVERFLOW DRAINS AND VTR DETAILS.
8. EXPOSED PIPING: PROVIDE CHROME PLATING FOR EXPOSED PIPING IN FINISHED ROOMS.
9. PENETRATIONS: PROVIDE ESCUTCHEON PLATES FOR EXPOSED PIPING PENETRATIONS AND SHEET METAL FLASHING FOR EXPOSED DUCTWORK PENETRATIONS.
10. SHAFT AND PLENUM CONNECTIONS: SEAL CONNECTIONS TO AIR SHAFTS AIRTIGHT. PROVIDE AIRTIGHT SEAL AROUND PENETRATIONS IN AIR PLENUMS.
11. LIGHT FIXTURE CLEARANCE: COORDINATE LOCATIONS OF MECHANICAL WORK TO PROVIDE CLEARANCES OVER LIGHTING FIXTURES FOR REMOVAL AND REPLACEMENT.
12. CABLE TRAYS: PIPING INSTALLED ADJACENT TO ELECTRICAL CABLE TRAYS SHALL ALLOW MINIMUM ACCESS OF 6" ABOVE AND TO THE SIDE OF CABLE TRAYS.
13. MOTORS: COMPLY WITH ENERGY CODE ENFORCED BY AHJ FOR MINIMUM EFFICIENCIES UNDER FULL LOAD.
14. ACCESS CLEARANCES FOR MAINTENANCE AND REPLACEMENT: VERIFY PHYSICAL DIMENSIONS OF EQUIPMENT TO ENSURE THAT ACCESS CLEARANCES CAN BE MET. COORDINATE LOCATIONS OF MECHANICAL WORK AND WORK OF OTHER TRADES TO PROVIDE ACCESS CLEARANCES FOR SERVICE AND MAINTENANCE.

COORDINATION REQUIREMENTS

1. IRRIGATION SYSTEM: COORDINATE IRRIGATION WATER DEMAND, MINIMUM WATER PRESSURE REQUIREMENTS & CONTROL CABINET LOCATIONS WITH IRRIGATION CONTRACTOR.
2. GAS: CONTRACTOR/GAS COMPANY SHALL FINALIZE GAS METER AND GAS SERVICE LOCATIONS. INSTALL SEISMIC GAS SHUT OFF VALVE PER GAS COMPANY REGULATIONS.
3. UTILITIES: COORDINATE WITH SITE UTILITY CONTRACTOR AND CIVIL DRAWINGS FOR UTILITY CONNECTIONS AND EXTENSIONS.
4. ROOF DRAINAGE: COORDINATE WITH GENERAL CONTRACTOR FOR ROOF DRAIN AND OVERFLOWS, SCUPPER DRAINS, AND CONDENSATE DRAINS.
5. PLUMBING FIXTURES & EQUIPMENT: COORDINATE EXACT LOCATION OF ALL PLUMBING FIXTURES & EQUIPMENT WITH ARCHITECTURAL AND OTHER TRADES DOCUMENTS.
6. PIPING: COORDINATE EXACT LOCATION OF ALL STRUCTURAL FRAMING & FOOTINGS AND FINALIZE THE EXACT ROUTING OF ALL PIPES WITH STRUCTURAL ENGINEER AT THE SITE PRIOR TO AND DURING THE CONSTRUCTION. COORDINATE UNDER GRADE PIPING & FOUNDATION DRAINAGE PIPING WITH CIVIL ENGINEER.
7. ADJUSTMENTS: ALL EQUIPMENT, MOTORS, FANS GAS BURNERS, IGNITION DEVICES, DRIVES, ETC. SHALL BE ADJUSTED AND BALANCED TO OPERATE AT SPECIFIED RATINGS AS REQUIRED FOR THIS PROJECT SITE AND ACCOUNTING FOR ELEVATION ABOVE SEA LEVEL.
8. APPROVALS: MECHANICAL AND PLUMBING EQUIPMENT SHALL BE APPROVED FOR INSTALLATION IN THE PROJECT LOCATION AND SHALL HAVE ALL CERTIFICATIONS AND RATINGS TO MEET ALL ENERGY, POLLUTION, ENVIRONMENTAL, SEISMIC, APPLICABLE CODES AND REGULATIONS. THE CONTRACTOR SHALL COORDINATE WITH MANUFACTURE SUPPLIERS AND SHALL INCLUDE ALL COSTS REQUIRED TO MEET THE BID DOCUMENTS.
9. FIRE PROTECTION: CONTRACTOR SHALL PROVIDE A FULLY DESIGNED FIRE PROTECTION SPRINKLER SYSTEM IN COMPLIANCE WITH NFPA AND LOCAL CODES. PROVIDE DESIGN, PERMITS, MATERIALS, INSTALLATION, TESTING AND ALL OTHER FOR A FULLY OPERATIONAL SYSTEM. LOCATION OF ALL PIPING TO BE COORDINATED WITH OTHER TRADES.
10. PRIOR TO PIPING INSTALLATION: PLUMBING CONTRACTOR TO COORDINATE PIPING LAYOUT WITH ALL OTHER TRADES.
11. ACCESS: COORDINATE ALL ACCESS LOCATIONS WITH GENERAL CONTRACTOR AND ARCHITECT TO ENSURE ALL REQUIRED ACCESS HATCHES, ACCESS PANELS & ACCESS COVERS ARE PROVIDED.
12. PROVIDE WATER TIGHT SEALS FOR ANY PIPING PENETRATING THE EXTERIOR FOUNDATION WALLS OR SLABS.
13. ANY DISCREPANCIES SHOULD BE REPORTED TO THE ARCHITECT IMMEDIATELY.
14. PROVIDE FIRE PROOFING FOR ALL PIPING PENETRATING FIRE BARRIER WALLS OR FLOOR SLABS.

DISINFECTION OF POTABLE WATER SYSTEM REQUIREMENTS

1. NEW OR REPAIRED POTABLE WATER SUPPLY SYSTEMS SHALL BE DISINFECTED PRIOR TO USE.
2. INITIAL COLIFORM SAMPLE IS REQUIRED PRIOR TO ADMINISTERING WATER-CHLORINE SOLUTION.
3. SECTION 609.9 ITEMS #2 OR #3 CAN BE USED PRECEDED BY AND FOLLOWED BY ITEM #1.
   3.1. NOTE FILL PORT TO ADD CHLORINE MUST BE WHERE WATER SUPPLY ENTERS BUILDING AND A FLOW METER TO MEASURE SOLUTION.
4. AFTER WATEROCHLORINE SOLUTION IS INCORPORATED INTO THE NEW OR REPAIRED WATER SUPPLY SYSTEM A 48 HOUR WAITING PERIOD MUST BE OBSERVED PRIOR TO BACTERIOLOGICAL TEST.
5. BACTERIOLOGICAL TEST SHALL BE CONDUCTED BY A LABORATORY CERTIFIED FOR DRINKING WATER IN WASHINGTON STATE AFFIRMING WATER QUALITY CONTAINS NO COLIFORM BY SAMPLE TESTING THE FURTHEST FIXTURE FROM PUBLIC WATER SOURCE AND NOT LESS THAN TWO OTHER LOCATIONS PART OF THE WATER SUPPLY SYSTEM.
6. CHLORINE LEVEL IN THE NEW OR REPAIRED WATER SUPPLY SYSTEM SHALL NOT BE LESS THAN THE MEAN AVERAGE OF THE AREA IN RELATIONSHIP FROM THE WATER PURVEYOR SOURCE.
7. WARNING: IN CASE A WATER SOFTENER IS PART OF THE COLD WATER SYSTEM, CONTRACTOR TO ENSURE THE WATER SOFTENER IS CONNECTED AND OPERATIONAL BEFORE STARTING THE DISINFECTION PROCESS. FAILURE TO FOLLOW THE INSTRUCTIONS WILL VOID THE WATER HEATER OR HEAT PUMP WARRANTY.

SYMBOLS

GENERAL

- ARCHITECTURAL BACKGROUND (THIN LINE)
- NEW PIPING (HEAVY LINE)
- EXISTING PIPING (THIN LINE)
- EXISTING WORK TO BE REMOVED
- MATCHLINE OR PROPERTY LINE
- CONNECTION TO EXISTING

SECTION IDENTIFICATION

A, P-3 | P-3

- INDICATES DIRECTION OF CUTTING PLANE
- LETTER INDICATES SECTION (NO. INDICATES DETAIL)
- SHEET NUMBER WHERE SECTION IS DRAWN
- SHEET NUMBER WHERE SECTION IS TAKEN

DETAIL IDENTIFICATION

- # DETAIL NUMBER
- # DRAWING/SHEET NUMBER

EQUIPMENT

- HWCP-1 TYPICAL EQUIPMENT DESIGNATION

PIPING

- W — WASTE BELOW GRADE
- W — WASTE ABOVE GRADE
- PW — PUMPED WASTE
- IW — INDIRECT WASTE
- SS — SANITARY SEWER BELOW GRADE
- SS — SANITARY SEWER ABOVE GRADE
- PSS — PUMPED SANITARY SEWER
- V — VENT
- SD — STORM DRAIN
- OD — OVERFLOW STORM DRAIN
- PSD — PUMPED STORM DRAIN
- CD — CONDENSATE DRAIN
- PCD — PUMPED CONDENSATE DRAIN
- - — COLD WATER (CW)
- - - — HOT WATER (HW), POTABLE, 120°F
- - - 140 — HOT WATER, POTABLE, TEMPERATURE OTHER THAN 120°F
- - - - — HOT WATER CIRCULATING (HWC), POTABLE, 120°F
- - - - 140 — HOT WATER CIRCULATING, POTABLE, TEMPERATURE OTHER THAN 120°F
- FOF — FUEL OIL FILL
- FOS — FUEL OIL SUPPLY
- FOR — FUEL OIL RETURN
- FOV — FUEL OIL VENT
- RV — RELIEF VENT
- G — LOW PRESSURE NATURAL GAS
- MPG — MEDIUM PRESSURE NATURAL GAS
- IRR — IRRIGATION (NON POTABLE)
- F — FIRE MAIN

PIPE SYMBOLS

- TOP PIPE CONNECTION
- BOTTOM PIPE CONNECTION
- PIPE TURNING UP
- PIPE TURNING DOWN/DROP
- PIPE CAP
- PIPE PLUG
- UNION
- FLANGE
- WYE STRAINER
- WYE STRAINER WITH CAPPED HOSE END BLOWDOWN VALVE
- BALL VALVE

VALVES AND DEVICES

- BALL VALVE
- GLOBE VALVE
- CHECK VALVE
- BALANCING OR PLUG VALVE
- BUTTERFLY VALVE
- FLEXIBLE CONNECTION IN PIPING
- PRV — PRESSURE REDUCING VALVE (PRV)
- AUTOMATIC CONTROL VALVE, 2-WAY
- AUTOMATIC CONTROL VALVE, 3-WAY
- ID — RELIEF VALVE
- BV — BALANCING/METERING VALVE
- REDUCER
- DIRECTION OF FLOW
- A — PIPE ANCHOR
- PIPE ALIGNMENT GUIDE
- PS — PIPE SUPPORT
- VALVE STATION OR ASSEMBLY
- ID — INDIRECT DRAIN, PIPE TO DRAIN
- POINT OF CONNECTION
- RD, OD — ROOF DRAIN, OVERFLOW DRAIN
- FLOOR DRAIN
- HOSE BIBB
- BREAK IN PIPING OR DUCTWORK
- GM — GAS METER
- M — INLINE WATER METER
- PUMP
- PRESSURE GAUGE
- THERMOMETER
- P/T — PRESSURE/TEMPERATURE TEST PORT
- RPBP — REDUCED PRESSURE BACKFLOW PREVENTER
- DCVA — DOUBLE CHECK VALVE ASSEMBLY
- CATCH BASIN – SAND/OIL INTERCEPTOR
- TRENCH DRAIN
- EMERGENCY GAS SHUT-OFF VALVE
- SEISMIC GAS SHUT-OFF VALVE
- WASHER BOX
- GREASE INTERCEPTOR

ABBREVIATIONS

ABV	ABOVE
AD	AREA DRAIN
AFF	ABOVE FINISHED FLOOR
AHJ	AUTHORITY HAVING JURISDICTION
BFF	BELOW FINISHED FLOOR
BFP	BACKFLOW PREVENTER
BOH	BACK OF HOUSE
BP	BOOSTER PUMP
BT	BATHTUB
BTUH	BRITISH THERMAL UNIT PER HOUR
BV	BALANCING VALVE
C	COMMON
CAP	CAPACITY
CB	CATCH BASIN
CD	CONDENSATE DRAIN
CFF	CAPPED FOR FUTURE
CFM	CUBIC FEET PER MINUTE
CI	CAST IRON
CLG	CEILING, COOLING
CLW	CLOTHES WASHER
CO	CLEANOUTS
COMB	COMBUSTION
CONT	CONTINUE, CONTROL
CONTR	CONTRACTOR
COTG	CLEANOUTS TO GRADE
CP	CIRCULATING PUMP
CV	CHECK VALVE
CW	COLD WATER
D	DIAMETER
DB	DRY BULB, DECIBEL
DF	DRINKING FOUNTAIN
DFU	DRAIN FIXTURE UNITS
DI	DUCTILE IRON
DIM	DIMENSION
DN	DOWN
DS	DOWN SPOUT
DWG	DRAWING
(E)	EXISTING
EFF	EFFICIENCY
ELEC	ELECTRIC
EQUIV	EQUIVALENT
EWC	ELECTRIC WATER COOLER
EWH	ELECTRIC WATER HEATER
EXT	EXTERIOR, EXTERNAL
F	FAHRENHEIT
FCO	FLOOR CLEANOUTS
FD	FLOOR DRAIN
FDC	FIRE DEPARTMENT CONNECTION
FF	FINISHED FLOOR
FLR	FLOOR
FPM	FEET PER MINUTE
FPS	FEET PER SECOND
FS	FLOOR SINK
FT	FEET
FU	FIXTURE UNITS
G	GAS (LOW PRESSURE)
GAL	GALLONS
GD	GARAGE DRAIN
GM	GAS METER
GPG	GRAINS PER GALLON
GPM	GALLONS PER MINUTE
GV	GATE VALVE
GWB	GYPSUM WALLBOARD
GWH	GAS WATER HEATER
HB	HOSE BIBB
HD	HEAD
HDR	HUB DRAIN
HEDV	HOSE END DRAIN VALVE
HORIZ	HORIZONTAL
HP	HORSEPOWER
HPCW	HIGH PRESSURE COLD WATER
HW	HOT WATER
HWC	HOT WATER RE-CIRCULATION
HWCP	HOT WATER CIRCULATION PUMP
HWR	HOT WATER RETURN
HWST	HOT WATER STORAGE TANK
HX	HEAT EXCHANGER
ICW	INDUSTRIAL COLD WATER
ID	INDIRECT DRAIN, INSIDE DIAMETER
IE	INVERT ELEVATION
IHW	INDUSTRIAL HOT WATER
IN	INCH
KS	KITCHEN SINK
KW	KILOWATT
L	LONG, LENGTH
LAV	LAVATORY
LB	POUND
M	WATER METER
MBH	THOUSAND BTU PER HOUR
MECH	MECHANICAL
MCA	MIN. CIRCUIT AMPACITY
MOCP	MAX. OVER CURRENT PROTECTION
MPG	MEDIUM PRESSURE GAS
MTD	MOUNTED
(N)	NEW
NC	NORMALLY CLOSED
NO	NORMALLY OPEN
OD	OUTSIDE DIMENSION/DIAMETER
	OVERFLOW DRAIN/DECK DRAIN
OPD	OVER PRESSURE DEVICE
OPNG	OPENING
P	PUMP
PD	PRESSURE DROP, PLANTER DRAIN
POC	POINT OF CONNECTION
PRV	PRESSURE REDUCING VALVE
	PRESSURE RELIEF VALVE
PS	PUMPED STORM DRAINAGE
PSIG	POUNDS PER SQUARE INCH GAUGE
PSD	PUMPED STORM DRAINAGE
PSS	PUMPED SANITARY SEWER
PSW	PUMPED SANITARY WASTE
PW	PUMPED WASTE
RD	ROOF DRAIN
REF	REFERENCE
RPBP	REDUCED PRESSURE BACKFLOW PREVENTER
RPM	REVOLUTIONS PER MINUTE
S	SINK
SCH	SCHEDULE
SCW	SOFTENED COLD WATER
SD	STORM DRAIN
SEP	SEWAGE EJECTOR PUMP
SF	SQUARE FOOT
SGSV	SEISMIC GAS SHUT-OFF VALVE
SH	SHOWER
SO	STORM OVERFLOW
SP	STATIC PRESSURE/SUMP PUMP
SR	SUDS RELIEF
SS	STAINLESS STEEL/SANITARY SEWER
SSS	SIDE SANITARY SEWER
STD	STANDARD
SQ	SQUARE
TD	TRENCH DRAIN
TMV	THERMOSTATIC MIXING VALVE
TP	TRAP PRIMER
TYP	TYPICAL
UH	UNIT HEATER
UON	UNLESS OTHERWISE NOTED
UR	URINAL
V	VENT
VTR	VENT THRU ROOF
W	WASTE, WATT, WIDE
WC	WATER CLOSET
WCO	WALL CLEANOUTS
WHD	WALL HYDRANT
WM	WASHING MACHINE
WSFU	WATER SUPPLY FIXTURE UNITS

DRAWING INDEX

DWG	DESCRIPTION	INCLUDED IN SET: PERMIT SET 2/15/2024	OWNER CHANGE SET 9/5/2024	PERMIT RESUBMITTAL 4/25/2025			
P0H.00	LEGEND, GENERAL NOTES, AND DRAWING INDEX	x	x	x			
P0H.01	PLUMBING NOTES AND TABLES	x	x	x			
P0H.02	PLUMBING CALCULATIONS	x	x	x			
P0H.03	PLUMBING SCHEDULES	x	x	x			
P1H.00	BUILDING H SITE PLAN			x			
P2H.00	UNDERSLAB WASTE & VENT PLAN	x	x	x			
P2H.01	LEVEL 1 WASTE & VENT PLAN						
P2H.02	LEVEL 2 WASTE & VENT PLAN	x	x	x			
P2H.03	LEVEL 3 WASTE & VENT PLAN	x	x	x			
P2H.04	ROOF WASTE & VENT PLAN	x	x	x			
P3H.01	LEVEL 1 PLUMBING SUPPLY PLAN	x	x	x			
P3H.02	LEVEL 2 PLUMBING SUPPLY PLAN	x	x	x			
P3H.03	LEVEL 3 PLUMBING SUPPLY PLAN	x	x	x			
P4H.00	WASTE & VENT RISER DIAGRAMS		x	x			
P5H.00	SUPPLY RISER DIAGRAMS		x	x			
P7H.00	DETAILS	x	x	x			
P7H.01	DETAILS	x	x	x			

2

City of Puyallup Development & Permitting Services ISSUED PERMIT
Building | Planning | Engineering | Public Works | Fire | Traffic

REVISIONS: NO. | DATE | DESCRIPTION

REED JACKSON STATE OF WASHINGTON 57165 REGISTERED PROFESSIONAL ENGINEER

ROBISON ENGINEERING, INC
19401 40TH AVE W., SUITE 302
LYNNWOOD, WA 98036
206-364-3343 TEL
REI PROJECT NO.: 1219-001
CONTACT: JEFF MACGILLIVRAY

DRAWN: JM
DESIGNED: JM
CHECKED: RJ
APPROVED: JR

PROJECT: BRADLEY HEIGHT APARTMENTS - BUILDING H
202 27TH AVE SE
PUYALLUP, WA 98374

PRMU20240279

ROBISON ENGINEERING, INC
19401 40TH AVE W. SUITE 302
LYNNWOOD, WA 98036
PHONE:(206)364-3343

DATE: 04/25/2025

SHEET TITLE: LEGEND GENERAL NOTES AND DRAWING INDEX

SHEET NO. P0H.00

City of Puyallup
Development & Permitting Services
ISSUED PERMIT
Building | Planning
Engineering | Public Works
Fire | Traffic

PLUMBING TABLES

PIPE INSULATION SCHEDULE

SERVICE	OPTION 1		OPTION 2		VAPOR RETARDER REQUIRED	NOTES
	MATERIAL	THICKNESS	MATERIAL	THICKNESS		
DOMESTIC COLD WATER, IRRIGATION WATER, CONDENSATE DRAINS, STORM DRAIN (IN CONDITIONED SPACE)	MINERAL–FIBER WITH JACKET	ALL SIZES: ½"	PVC/NBR	ALL SIZES: ⅜"	YES	12,13
DOMESTIC COLD WATER, IRRIGATION WATER, CONDENSATE DRAINS, WASTE (OUTSIDE THE CONDITIONED SPACE)	MINERAL–FIBER WITH JACKET	(R–3) ½" PIPE: ½" ALL OTHER SIZES: 1"	PVC/NBR	(R–3) ½" PIPE: ½" ALL OTHER SIZES: ¾"	YES	7,8,10
ROOF DRAIN BODIES	MINERAL–FIBER OR CELLULAR GLASS WITH JACKET	1"	PVC/NBR	1"	YES	12
DOMESTIC HOT WATER AND RECIRCULATED HOT WATER (RESIDENTIAL)	MINERAL–FIBER WITH JACKET	(R–3) ½" PIPE: ½" ALL OTHER SIZES: 1"	PVC/NBR	(R–3) ½" PIPE: ½" ALL OTHER SIZES: ¾"	NO	2,10
DOMESTIC HOT WATER AND RECIRCULATED HOT WATER (NONRESIDENTIAL)	MINERAL–FIBER WITH JACKET	½"–1¼" PIPE: 1" 1½"–4" PIPE: 1.5"	PVC/NBR	½"–1¼" PIPE: 1" 1½"–4" PIPE: 1.5"	NO	3,9
EXPOSED SANITARY DRAINS AND DOMESTIC WATER SUPPLIES AND STOPS FOR ADA FIXTURES.	TRUEBRO LAV–GUARD	N/A	N/A	N/A	NO	11

2

NOTES:

1. PIPING INSULATION EXPOSED TO THE WEATHER SHALL BE PROTECTED FROM DAMAGE. CONTRACTOR SHALL PROVIDE SHIELDING FROM SOLAR RADIATION THAT CAN CAUSE DEGRADATION OF THE MATERIAL. ADHESIVE TAPE SHALL NOT BE PERMITTED.
2. PER 2018 WSEC SECTION R403.5.3 (RESIDENTIAL) INSULATION FOR HOT WATER PIPE SHALL HAVE A MINIMUM R–VALUE OF R–3.
3. PIPING FROM WATER HEATER TO THE TERMINATION OF HEATED WATER SUPPLY PIPE SHALL BE INSULATED IN ACCORDANCE WITH TABLE C403.2.9.
4. ON BOTH THE INLET AND OUTLET PIPING OF A STORAGE HOT WATER HEATER, THE FIRST 8 FEET OF PIPING OR PIPING FROM WATER HEATER TO HEAT TRAP SHALL BE INSULATED.
5. HEAT TRACED PIPING SHALL BE INSULATED IN THE SAME MANNER AS NON HEAT TRACED PIPING OR PER THE HEAT TRACE MANUFACTURER'S INSTRUCTIONS.
6. TUBULAR PIPING INSULATION SHALL NOT BE REQUIRED FOR THE FOLLOWING:
   - 6.1. THE TUBING FROM THE CONNECTION AT THE TERMINATION OF THE FIXTURE SUPPLY PIPING TO A PLUMBING FIXTURE OR PLUMBING APPLIANCE.
   - 6.2. VALVES, PUMPS, STRAINERS, AND THREADED UNIONS IN PIPING THAT IS 1 INCH OR LESS IN NOMINAL DIAMETER.
   - 6.3. PIPING FROM USER–CONTROLLED SHOWER AND BATH MIXING VALVES TO THE WATER OUTLETS.
   - 6.4. COLD WATER PIPING OF A DEMAND RECIRCULATION WATER SYSTEM.
   - 6.5. TUBING FROM A HOT DRINKING–WATER HEATING UNIT TO THE WATER OUTLET.
   - 6.6. PIPING AT LOCATIONS WHERE A VERTICAL SUPPORT OF THE PIPING IS INSTALLED.
   - 6.7. PIPING SURROUNDED BY BUILDING INSULATION WITH A THERMAL RESISTANCE (R–VALUE) OF NOT LESS THAN R–3.
   - 6.8. HOT WATER PIPING THAT IS PART OF THE FINAL PIPE RUN TO THE PLUMBING FIXTURE AND IS NOT PART OF THE HEATED–WATER CIRCULATION SYSTEM CIRCULATION PATH IS NOT REQUIRED TO MEET THE MINIMUM INSULATION REQUIREMENTS OF C404.6.
7. PER 2018 UPC SECTION 312.6 NO WATER, SOIL, OR WASTE PIPE SHALL BE INSTALLED OR PERMITTED OUTSIDE OF A BUILDING, IN ATTICS OR CRAWL SPACES, OR IN AN EXTERIOR WALL UNLESS, WHERE NECESSARY, ADEQUATE PROVISION IS MADE TO PROTECT SUCH PIPE FROM FREEZING. ALL HOT AND COLD WATER PIPES OUTSIDE THE CONDITIONED SPACE SHALL BE PROVIDED WITH INSULATION WITH A MINIMUM R–VALUE OF R–3.
8. HEAT TRACING SHALL BE PROVIDED FOR COLD WATER AND IRRIGATION WATER IN UNCONDITIONED SPACES. CONTACT ENGINEERING IF NECESSARY. PER 2018 WSEC SECTION C403.12.3 FREEZE PROTECTION SYSTEMS, SUCH AS HEAT TRACING OF OUTDOOR PIPING, SHALL INCLUDE AUTOMATIC CONTROLS CONFIGURED TO SHUT OFF THE SYSTEMS WHEN OUTDOOR AIR TEMPERATURES ARE ABOVE 40°F.
9. PER 2018 WSEC TABLE C403.2.9 INSULATION FOR HOT WATER AND HOT WATER RECIRCULATION SHALL HAVE A THERMAL CONDUCTIVITY OF 0.21–0.28 (BTU.IN/H.FT².°F) AT OPERATING TEMPERATURE.
10. INSULATION R–VALUE SHALL MEET THE MINIMUM REQUIREMENT. THICKNESS IS BASED ON GRAINGER SAMPLE DATA FOR K–FLEX(PVC/NBR) AND OWENS CORNING(FIBER GLASS).
11. ALL ADA P–TRAPS, HOT WATER SUPPLY TUBING, AND SHUT–OFF COCKS SHALL BE PROTECTED WITH APPROVED COVERS TO PREVENT SCALDING.
12. REQUIRED BY ENGINEERING BASED ON BEST PRACTICE.
13. INSULATION IS NOT REQUIRED ON PLASTIC COLD WATER PIPING.

HANGER SPACING FOR WATER PIPING

ALL SUSPENDED WATER SUPPLY PIPE SHALL BE SUPPORTED AS FOLLOWS PER 2018 UPC TABLE 313.3:

	MAX. HORIZONTAL SPACING	MAX. VERTICAL SPACING
COPPER PIPE ≤1½"	6 FT.	10 FT.
COPPER PIPE >2"	10 FT.	10 FT.
COPPER TUBING ≤1½"	6 FT.	10 FT.
COPPER TUBING >2"	10 FT.	10 FT.
CPVC ≤ 1"	3 FT.	10 FT.
CPVC > 1¼"	4 FT.	10 FT.

HANGER SPACING FOR WASTE AND VENT PIPING

ALL SUSPENDED SANITARY AND VENT PIPE SHALL BE SUPPORTED AS FOLLOWS PER 2018 UPC TABLE 313.3:

	MAX. HORIZ. SPACING	MAX. VERT. SPACING
ABS	4 FT.	10 FT.
PVC (TYPE DWV)	4 FT.	10 FT.
CAST–IRON HUBLESS*	EVERY OTHER JOINT	15 FT.

*CAST–IRON OVER 4' SHALL BE SUPPORTED AT EVERY JOINT

PLUMBING FIXTURE FLOW RATES PER 2018 UPC CH. 4

FIXTURE TYPE	FLOW RATE	NOTES
SHOWERHEADS	1.8 GPM @ 80 PSI	
LAVATORY FAUCETS, RESIDENTIAL	1.2 GPM @ 60 PSI	1
LAVATORY FAUCETS, NON–RESIDENTIAL	0.5 GPM @ 60 PSI	2
KITCHEN FAUCETS	1.8 GPM @ 60 PSI	3
GRAVITY TANK–TYPE WATER CLOSETS	1.28 GALLONS/FLUSH	4
FLUSHOMETER TANK WATER CLOSETS	1.28 GALLONS/FLUSH	4
FLUSHOMETER VALVE WATER CLOSETS	1.28 GALLONS/FLUSH	4
ELECTROMECHANICAL HYDRAULIC WATER CLOSETS	1.28 GALLONS/FLUSH	4
URINALS	0.5 GALLONS/FLUSH	

NOTES:

1. LAVATORY FAUCETS SHALL NOT HAVE A FLOW RATE LESS THAN 0.8 GPM AT 20 PSI.
2. WHERE COMPLYING FAUCETS ARE UNAVAILABLE, AERATORS RATED AT 0.35 GPM OR OTHER MEANS MAY BE USED TO ACHIEVE REDUCTION.
3. KITCHEN FAUCETS MAY TEMPORARILY INCREASE FLOW ABOVE THE MAXIMUM RATE, BUT NOT ABOVE 2.2 GPM @ 60 PSI AND MUST DEFAULT TO A MAXIMUM FLOW RATE OF 1.8 GPM @ 60 PSI.
4. INCLUDES SINGLE AND DUAL FLUSH WATER CLOSETS WITH AN EFFECTIVE FLUSH OF 1.6 GALLONS OR LESS. SINGLE FLUSH TOILETS – THE EFFECTIVE FLUSH VOLUME SHALL NOT EXCEED 1.6 GALLONS. THE EFFECTIVE FLUSH VOLUME IS THE AVERAGE FLUSH VOLUME WHEN TESTED IN ACCORDANCE WITH ASME A112.19.2 DUAL FLUSH TOILETS – THE EFFECTIVE FLUSH VOLUME SHALL NOT EXCEED 1.6 GALLONS. THE EFFECTIVE FLUSH VOLUME IS DEFINED AS THE COMPOSITE, AVERAGE FLUSH VOLUME OF TWO REDUCED FLUSHES AND ONE FULL FLUSH. FLUSH VOLUMES WILL BE TESTED IN ACCORDANCE WITH ASME A112.19.2 AND ASME A112.19.14.

NOTE TO CONTRACTOR

DRAWINGS ARE DIAGRAMMATIC, SHOWING THE GENERAL LOCATION, TYPE, LAYOUT, AND EQUIPMENT REQUIRED. THE DRAWINGS SHALL NOT BE SCALED FOR EXACT MEASUREMENT. REFER TO ARCHITECTURAL DRAWINGS FOR DIMENSIONS. REFER TO MANUFACTURER'S STANDARD INSTALLATION DRAWINGS FOR EQUIPMENT CONNECTIONS AND INSTALLATION REQUIREMENTS. PROVIDE DUCTWORK, CONNECTIONS, ACCESSORIES, OFFSETS, AND MATERIALS NECESSARY FOR A COMPLETE SYSTEM.

CONTRACTOR SUBSTITUTIONS & REVISIONS

PLEASE SUBMIT PROPOSALS FOR SUBSTITUTIONS OR REVISIONS FOR REVIEW AND APPROVAL PRIOR TO ORDERING MATERIAL OR DOING WORK. FOR EQUIPMENT THAT IS SCHEDULED BY MANUFACTURER'S NAME AND CATALOG DESIGNATIONS, THE MANUFACTURER'S PUBLISHED DATA AND/OR SPECIFICATION FOR THAT ITEM ARE CONSIDERED PART OF SPECIFICATION. ENGINEERING COSTS FOR REVISING MEP PLANS SHALL BE ADDRESSED IN THE COST ANALYSIS OF THE SUBSTITUTION PROPOSAL. CONTRACTOR TO COORDINATE WITH ENGINEER AND DETERMINE ASSOCIATED DESIGN AND PERMITTING COSTS. CONTRACTOR SHALL BE RESPONSIBLE FOR OTHER COSTS ASSOCIATED WITH UNFORESEEN ISSUES RESULTING FROM SUBSTITUTIONS OR REVISIONS.

PRE-CONSTRUCTION MEETING NOTES

CONTRACTORS SHALL ATTEND A PRE–CONSTRUCTION MEETING WITH THE ENGINEER FOR THE PURPOSE OF REVIEWING THE WORK PRIOR TO ORDERING ANY EQUIPMENT OR PERFORMING ANY WORK. THE MEETING SHALL BE LOCATED AT THE PROJECT SITE ON A DATE AND TIME TO BE MUTUALLY AGREED. THE MEETING WILL BE A WORKING SESSION. THE MEETING WILL BE FACILITATED BY THE ENGINEER AND THE AGENDA WILL INCLUDE A DETAILED REVIEW OF THE PLANS AND SPECIFICATIONS, CROSS CHECK WITH OTHER TRADES FOR COORDINATION ISSUES, REVIEW OF PROPOSED PRODUCTS, REVIEW OF PLANNED MEANS AND METHODS,AND ON–SITE INVESTIGATION OF FIELD CONDITIONS RELATIVE TO EXISTING CONDITIONS THAT COULD AFFECT THE WORK. PERSONS ATTENDING THE MEETING SHALL BE KNOWLEDGEABLE OF THE PROJECT AND SHALL BE THE SPECIFIC PERSONS INTENDED TO CONTINUE WITH THE PROJECT THROUGH TO COMPLETION. IF REQUIRED, REVISED PLANS WILL BE ISSUED THROUGH OFFICIAL CHANNELS. CHANGES IN THE BID PRICE WILL BE DISCUSSED, BUT NO CHANGE ORDERS WILL BE ISSUED UNLESS PROCESSED THOUGH OFFICIAL CHANNELS. IT SHALL BE UNDERSTOOD THAT THE ENGINEER HAS NO AUTHORITY TO ISSUE CHANGE ORDERS.

THE FOLLOWING TRADES SHALL BE REPRESENTED FOR THE MINIMUM TIME INDICATED:

MECHANICAL SHEET METAL	4 HOURS
PLUMBING/PIPING	4 HOURS
ELECTRICAL	4 HOURS
SPRINKLER	2 HOURS
GENERAL CONTRACTOR	ALL SESSIONS

PLUMBING NOTES

1. CONNECTIONS: PROVIDE PLUMBING FIXTURE CONNECTIONS TO BUILDING WASTE, VENT, COLD WATER, AND HOT WATER SYSTEM IN ACCORDANCE WITH DRAWINGS, MANUFACTURER'S RECOMMENDATIONS, AND LOCAL CODES. CONNECT TO EACH FIXTURE, EQUIPMENT, ETC. WITH ALL ACCESSORIES, VALVES, VACUUM BREAKERS, REGULATORS, UNIONS, ETC. AS REQUIRED AND AS RECOMMENDED BY THE MANUFACTURERS. REFER TO PLUMBING FIXTURE CONNECTION SCHEDULE ON PLANS.
2. HOT AND COLD: WATER PIPING CONNECTION TO EACH FIXTURE SHALL BE COLD WATER ON THE RIGHT HAND SIDE AND HOT WATER ON THE LEFT HAND SIDE.
3. HOT WATER: NON–CIRCULATING HOT WATER PIPE SHALL NOT EXCEED 10' UNLESS OTHERWISE SHOWN ON DRAWINGS.
4. VENT STACKS: COORDINATE VENT STACK WITH HVAC EQUIPMENT TO MAINTAIN MINIMUM 10' CLEARANCE FROM OUTSIDE AIR INTAKES.
5. CLEANOUTS: PROVIDE CLEANOUTS PER CURRENT UPC AND AS REQUIRED BY LOCAL JURISDICTIONS. CLEANOUTS SHALL BE LOCATED IN WALLS/FLOORS WHERE THEY ARE NOT HIGHLY VISIBLE. FLOOR CLEANOUTS IN CARPETED AREAS TO BE FITTED WITH CARPET INSERTS. LOCATIONS SHALL BE SUBMITTED TO ARCHITECT FOR APPROVAL. NOTE: NOT ALL CLEANOUTS ARE SHOWN ON THE PLUMBING DRAWINGS.
6. SUDS RELIEF: PROVIDE SUDS RELIEF IN ACCORDANCE WITH 2018 UPC SECTION 711.0, STATE AND LOCAL CODES.
7. SHUT–OFFS: PROVIDE 1/4 TURN BALL VALVE ANGLE STOP SHUT–OFF VALVES AND BRAIDED STAINLESS STEEL FLEX CONNECTORS AT HOT AND COLD WATER SUPPLY TO EACH FIXTURE. EXCEPTION: PROVIDE SCREWDRIVER STOPS AT BATH/SHOWERS.
8. TUB SPOUTS SHALL BE THREADED (NO PUSH–ON FITTINGS).
9. TRAP ARMS: PROVIDE TRAP ARMS SUCH THAT THE MAXIMUM LENGTH WILL NOT EXCEED CODE REQUIREMENTS.
10. ADA INSULATION: AT PLUMBING PIPING EXPOSED UNDER LAVATORIES, INSULATE THE EXPOSED PIPING AND TRAPS WITH PRODUCT SPECIFICALLY DESIGNED FOR THIS APPLICATION MEETING ADA REQUIREMENTS. PROVIDE HANDI–LAV GUARD OR EQUIVALENT. OFFSET P–TRAPS TO CLEAR WHEELCHAIR ACCESS.
11. GAS EQUIPMENT: GAS EQUIPMENT SHALL BE INSTALLED PER EQUIPMENT LISTINGS, APPLICABLE SFGC, SPC, LOCAL CODES & NFPA STANDARDS.
12. GAS CONNECTIONS: INSTALL FLEXIBLE QUICK DISCONNECT ASSEMBLIES FOR ALL GAS FIRED KITCHEN EQUIPMENT PER APPLICABLE SFGC, SPC, LOCAL CODES & NFPA STANDARDS. PROVIDE LOCKABLE GAS SHUT–OFF VALVES FOR FIREPLACES & BBQS IN UNATTENDED PUBLIC LOCATIONS IN THE BUILDING.
13. GAS PIPING CONNECTIONS TO WATER HEATERS, BOILERS AND FURNACES SHALL HAVE DIRT LEGS AND UNIONS PROVIDED ON APPLIANCE SIDE OF SHUTOFF VALVE.
14. GAS PIPING INSTALLATION: STEEL OR MALLEABLE IRON FUEL LINES 2" OR SMALLER SHALL BE ASSEMBLED USING THREAD SEALANT SUITABLE FOR NATURAL GAS. GAS PIPING LARGER THAN 2" SHALL HAVE WELDED FITTINGS.
15. GAS PIPING UNDERGROUND: WHERE INSTALLED BELOW GRADE THROUGH THE OUTER FOUNDATION OR BASEMENT WALL OF A BUILDING, SHALL BE ENCASED IN A PROTECTIVE PIPE SLEEVE. THE ANNULAR SPACE BETWEEN THE GAS PIPING AND THE SLEEVE SHALL BE SEALED.
16. GAS PIPING ABOVE GROUND: WHERE PASSING THROUGH AN OUTSIDE WALL, GAS PIPING SHALL BE PROTECTED AGAINST CORROSION BY COATING OR WRAPPING WITH AN INERT MATERIAL. WHERE PIPING IS ENCASED IN A PROTECTIVE PIPE SLEEVE, THE ANNULAR SPACE BETWEEN THE PIPING AND THE SLEEVE SHALL BE SEALED.
17. GAS PIPE SUPPORT: FUEL LINES SHALL BE SUPPORTED OR STRAPPED, AND SHALL BE PLUMB AND SQUARE.
18. GAS PIPING ON ROOFTOPS SHALL BE SUPPORTED AND ANCHORED TO THE ROOF.
19. GAS PIPING SHALL NOT BE BURIED UNDER A BUILDING, SLAB OR OTHER STRUCTURE.
20. GAS PIPING PROTECTIVE COATING: PAINT ALL EXTERIOR EXPOSED GAS PIPING WITH TWO COATS OF RUST INHIBITIVE PAINT. COLOR: GRAY.
21. WATER HAMMER ARRESTORS: PROVIDE AT THE END OF HOT AND COLD WATER LINES SERVING TWO OR MORE FIXTURES; SIZE IN ACCORDANCE WITH PLUMBING AND DRAINAGE INSTITUTE (PDI) REQUIREMENTS. WATER HAMMER ARRESTORS ARE REQUIRED FOR QUICK CLOSING VALVES, SUCH AS LAUNDRY WASHERS, FLUSH VALVES (PUBLIC TOILETS), ETC.
22. TRAP PRIMERS AS SPECIFIED: PROVIDE TRAP PRIMERS AND PIPING FOR FLOOR DRAINS, FLOOR SINKS, AREA DRAINS & HUB DRAINS. ARRANGE PIPING TO ACHIEVE EQUAL FLOW TO EACH DRAIN AND FLOOR SINK FOR TRAP PRIMERS SERVING MULTIPLE DRAINS AND FLOOR SINKS. COORDINATE EXACT LOCATIONS WITH ARCHITECT & ELECTRICAL ENGINEER.
23. P–TRAPS: ALL EXPOSED P–TRAPS SHALL BE CHROME–PLATED BRASS. P–TRAPS SERVING HANDICAPPED COUNTER TOP LAVATORIES SHALL BE INSULATED.
24. THROUGHOUT THE PROJECT PROVIDE BALL VALVES. GATE VALVES SHALL NOT BE USED. NO EXCEPTIONS.
25. HOT WATER RECIRCULATING BALANCING VALVES SHOULD BE BELL & GOSSETT CIRCUIT SETTER (WATTS OR EQUAL) WITH INTEGRAL READOUT PORTS, ADJUSTMENT KNOB, DRAIN CONNECTION, AND POSITIVE SHUTOFF.
26. DISASSEMBLY PROVISIONS: PROVIDE UNIONS OR FLANGES AT PIPING CONNECTIONS TO EQUIPMENT, COILS, TRAPS, CONTROL VALVES, AND OTHER COMPONENTS TO ALLOW DISASSEMBLY FOR MAINTENANCE.
27. REDUCERS: PROVIDE AS REQUIRED FROM LINE PIPE SIZE TO EQUIPMENT, TRAP, COIL, AND CONTROL VALVE CONNECTION SIZES.
28. VALVE TAGS: PROVIDE VALVE TAGS PER SPECIFICATIONS TO IDENTIFY VALVE AND THE AREA IT SERVES.
29. OFFSETS: PROVIDE FOR BRANCH LINES TO EQUIPMENT.
30. ALL TEMPERATURE MIXING VALVES SHALL COMPLY WITH ASSE–1070 SAFETY STANDARDS.
31. PROVIDE PIPE MARKER WITH DIRECTION OF FLOW. LABEL "NON–POTABLE WATER DO NOT DRINK" CLEARLY ON NON–POTABLE WATER PIPING.
32. PROVIDE EXPANSION LOOPS/EXPANSION JOINTS IN PIPING PER 2018 UPC TABLE 313.3 AND MANUFACTURER INSTALLATION INSTRUCTIONS.
33. PROVIDE APPROVED PIPE HANGERS & PIPE SUPPORTS IN ACCORDANCE WITH MANUFACTURER'S INSTALLATION INSTRUCTIONS AND 2018 UPC TABLES 313.3 & 313.6. SUBMIT FOR APPROVAL.
34. DIELECTRIC UNIONS: PROVIDE AT CONNECTIONS OF DISSIMILAR PIPE.
35. REFRIGERANT PIPING: PROVIDE SIZING & INSTALLATION IN STRICT ACCORDANCE WITH MANUFACTURER'S INSTRUCTIONS.
36. CONDENSATE DRAIN: PROVIDE A P–TRAP FOR EACH HVAC UNIT CONDENSATE PAN WITH PLUG TEES FOR CLEANING. CONDENSATE DRAINS SHALL BE DISCHARGED TO AN INDIRECT WASTE OR OUTSIDE.
37. PIPING & EQUIPMENT SUPPORTS/HANGERS & SEISMIC RESTRAINTS TO BE DESIGNED BY DESIGN BUILT CONTRACTOR.
38. IF NEEDED, PROVIDE VACUUM BREAKERS AT ALL HOSE BIBBS.
39. FLOOR DRAINS OR SIMILAR TRAPS DIRECTLY CONNECTED TO THE DRAINAGE AND SUBJECT TO INFREQUENT USE SHALL BE PROVIDED WITH AN APPROVED AUTOMATIC MEANS OF MAINTAINING THEIR WATER SEALS IN ACCORDANCE WITH 2018 UPC 1007.0.
40. INSULATION MATERIAL SHALL MEET CITY OF FERNDALE QUALITY STANDARDS.
41. ALL PIPING AND DUCTWORK SHALL BE INSULATED CONSISTENT WITH THE 2018 WASHINGTON STATE ENERGY CODE.
42. BUILDING DRAIN AND VENT PIPING MATERIALS SHALL COMPLY WITH 2018 UPC 701.0 AND 903.0.
43. ALL SANITARY SYSTEM MATERIAL SHALL BE LISTED BY AN APPROVED LISTING AGENCY.
44. ALL STORAGE WATER HEATING EQUIPMENT SHALL BE PROVIDED WITH AN APPROVED, LISTED EXPANSION TANK OR OTHER DEVICE DESIGNED FOR INTERMITTENT OPERATION FOR THERMAL EXPANSION CONTROL PER 2018 UPC 608.3.
45. WATER HEATERS SHALL BE ANCHORED OR STRAPPED TO RESIST HORIZONTAL DISPLACEMENTS DUE TO SEISMIC MOTION PER 2018 UPC 507.2.
46. MATERIAL EXPOSED WITHIN A DUCT OR PLENUM SHALL COMPLY WITH 2018 IMC 602.2.1.
47. HVAC EQUIPMENT AND WATER HEATERS SHALL COMPLY WITH 2018 IMC CHAPTER 3.
48. BOILERS SHALL COMPLY WITH ALL THE REQUIREMENTS OF 2018 IMC CHAPTER 10.
49. PROVIDE EXPANSION TANKS FOR BOILERS PER 2018 IMC SECTION 1009.0.
50. SHOWERS AND TUB/SHOWER COMBINATIONS SHALL BE PROVIDED WITH MIXING VALVES PER 2018 UPC 408.0.
51. PLUMBING FIXTURES AND FITTINGS SHALL COMPLY WITH CITY OF FERNDALE WATER CONSERVATION STANDARDS.
52. CONTRACTOR SHALL PROVIDE FIRESTOPPING AT PENETRATIONS AS NECESSARY TO RETAIN THE FIRE RATING OF ALL ASSEMBLIES. ALL WORK SHALL BE IN COMPLIANCE WITH CODE REQUIREMENTS FOR THE BUILDING CONSTRUCTION TYPE.
53. ALL GARAGE DRAINS, TRASH ROOMS DRAINS & GARAGE TRENCH DRAINS SHALL BE TAKEN TO SAND/OIL INTERCEPTOR(S) BEFORE CONNECTING TO THE SANITARY SEWER SYSTEM.
54. PLUMBING CONTRACTOR SHALL PROVIDE REDUCED PRESSURE BACKFLOW PREVENTERS OR OTHER APPROVED BACKFLOW PREVENTION DEVICE WHERE REQUIRED BY HEALTH AUTHORITIES, FOOD SERVICE DRAWINGS, APPLIANCE MANUFACTURER INSTRUCTIONS AND BY CODE.

    PROVIDE REQUIRED & PROPER BACK FLOW PREVENTERS AS SPECIFIED FOR THE APPLIANCES INCLUDING, BUT NOT LIMITED TO THE FOLLOWING:

    a. ICE MACHINES AND ICE MAKERS
    b. CARBONATED BEVERAGE DISPENSING SYSTEMS
    c. COFFEE BREWERS
    d. ESPRESSO MACHINES
    e. WATER FILTERS
    f. STEAM OR HOT WATER BOILERS
    g. IRRIGATION SYSTEM
    h. FIRE PROTECTION SYSTEM
    i. CHEMICAL TREATMENT SYSTEM
    j. SOAP/CHEMICAL DISPENSER SYSTEM
    k. COMMERCIAL WASHER

APPLICABLE CODES

THE FOLLOWING PROJECT DESIGN IS BASED ON THE FOLLOWING CODES:

–2018 INTERNATIONAL BUILDING CODE (IBC)
–2018 INTERNATIONAL MECHANICAL CODE (IMC)
–2018 UNIVERSAL PLUMBING CODE (UPC)
–2018 WASHINGTON STATE ENERGY CODE (WSEC) – COMMERCIAL PROVISIONS

NO.	DATE	DESCRIPTION

REVISIONS

REED JACKSON
STATE OF WASHINGTON
57165
REGISTERED PROFESSIONAL ENGINEER

ROBISON ENGINEERING, INC
19401 40TH AVE W., SUITE 302
LYNNWOOD, WA 98036
206-364-3343 TEL
REI PROJECT NO.: 1219-001
CONTACT: JEFF MACGILLIVRAY

DRAWN: JM
DESIGNED: JM
CHECKED: RJ
APPROVED: JR

PROJECT: BRADLEY HEIGHT APARTMENTS - BUILDING H
202 27TH AVE SE
PUYALLUP, WA 98374

PRMU20240279

ROBISON ENGINEERING, INC
19401 40TH AVE W. SUITE 302
LYNNWOOD, WA 98036
PHONE:(206)364-3343

DATE: 04/25/2025

SHEET TITLE: PLUMBING NOTES AND TABLES

SHEET NO. P0H.01

PLUMBING CALCULATIONS

City of Puyallup
Community & Economic Development
REVIEW STAMP
Building | Fire
Engineering | Public Works
Land Use | Traffic

Water Demand Calculator® (WDC v2.2)

PROJECT NAME : Bradley Heights - Building H

Click for Drop-down Menu → Multi-Family Building

Total Number of Apartments in the Building→ 24

Total Apartments in this Calculation→ 24

Wednesday, September 4, 2024
10:48 PM

FIXTURE GROUPS		FIXTURE	ENTER TOTAL NUMBER OF FIXTURES	PROBABILITY OF USE (%)	ENTER FIXTURE FLOW RATE (GPM)	MAXIMUM RECOMMENDED FIXTURE FLOW RATE (GPM)
Bathroom Fixtures	1	Bathtub (no Shower)	0	0.54	5.5	5.5
	2	Bidet	0	0.60	2.0	2.0
	3	Combination Bath/Shower	36	2.08	5.5	5.5
	4	Faucet, Lavatory	36	1.37	1.5	1.5
	5	Shower, per head (no Bathtub)	0	1.42	2.0	2.0
	6	Water Closet, 1.28 GPF Gravity Tank	36	0.60	3.0	3.0
Kitchen Fixtures	7	Dishwasher	24	0.36	1.3	1.3
	8	Faucet, Kitchen Sink	24	1.37	2.2	2.2
Laundry Room Fixtures	9	Clothes Washer	24	2.01	3.5	3.5
	10	Faucet, Laundry	0	1.37	2.0	2.0
Bar/Prep Fixtures	11	Faucet, Bar Sink	0	1.37	1.5	1.5
Other Fixtures	12	Fixture 1	0	0.00	0.0	6.0
	13	Fixture 2	0	0.00	0.0	6.0
	14	Fixture 3	0	0.00	0.0	6.0

COMPUTED RESULTS FOR PEAK PERIOD CONDITIONS

Total No. of Fixtures in Calculation
N = 180

99th Percentile Demand Flow
Q = 22.5 GPM

Hunter Number
H(n,p) = 2.36

Stagnation Probability
Pr[Zero Demand] = 9%

Method of Computation
Modified Wistort's Method

NOTES:
1. ADD 4 GPM FLOW RATE FOR HOSE BIBBS - TOTAL FLOW IS 26.5 GPM.

CALCULATIONS BASED ON 2021 UPC														
1 Bedroom Units (1 Bath)														
FIXTURE	FIXTURE UNITS				1	2	3	R	# OF FIXTURES PER UNIT	TOTAL QTY	TOTAL FIXTURE UNITS			
	TOTAL	CW	HW	W/V						OF FIXTURES	SERVICE	CW ONLY	HW ONLY	W/V ONLY
WATER CLOSET	2.5	2.5	0	3	4	4	4	0	1	12	30	30	0	36
LAVATORY	1	0.75	0.75	1	4	4	4	0	1	12	12	9	9	12
BATHTUB	4	3	3	2	4	4	4	0	1	12	48	36	36	24
CLOTHES WASHER	4	3	3	3	4	4	4	0	1	12	48	36	36	36
KITCHEN SINK W/ DISHWASHER	3	2.25	2.25	2	4	4	4	0	1	12	36	27	27	24
										TOTAL:	174	138	108	132
2 Bedroom Unit (2 Bath)														
FIXTURE	FIXTURE UNITS				1	2	3	R	# OF FIXTURES PER UNIT	TOTAL QTY	TOTAL FIXTURE UNITS			
	TOTAL	CW	HW	W/V						OF FIXTURES	SERVICE	CW ONLY	HW ONLY	W/V ONLY
WATER CLOSET	2.5	2.5	0	3	4	4	4	0	2	24	60	60	0	72
LAVATORY	1	0.75	0.75	1	4	4	4	0	2	24	24	18	18	24
BATHTUB	4	3	3	2	4	4	4	0	2	24	96	72	72	48
CLOTHES WASHER	4	3	3	3	4	4	4	0	1	12	48	36	36	36
KITCHEN SINK W/ DISHWASHER	3	2.25	2.25	2	4	4	4	0	1	12	36	27	27	24
										TOTAL:	264	213	153	204
Public Fixtures														
FIXTURE	FIXTURE UNITS				1	2	3	R		TOTAL QTY	TOTAL FIXTURE UNITS			
	TOTAL	CW	HW	W/V						OF FIXTURES	SERVICE	CW ONLY	HW ONLY	W/V ONLY
HOSE BIB	2.5/1	2.5/1	0	0	2	0	0	0		2	3.5	3.5	0	0
4" FLOOR DRAIN	0	0	0	8	1	0	0	0		1	0	0	0	8
										TOTAL:	3.5	3.5	0	8
	TOTAL	CW	HW	W/V										
TOTAL FIXTURE UNITS:	441.5	354.5	261	344										
PEAK FLOW:	FOR SUPPLY USE APPENDIX M CALCULATIONS													
	SUPPLY	WASTE												
REQUIRED SERVICE SIZE IN BUILDING:	1 1/2"	6"												
REQUIRED METER SIZE:	1"													

BRADLEY HEIGHTS APARTMENTS - WATER SUPPLY PRESSURE CALCULATIONS ARE BASED ON 2018 UPC APPENDIX A		
FROM STREET TO RPBP		
STREET PRESSURE, PSI		**75**
MINIMUM STREET PRESSURE, PSI		**75**
ASSUME +/- 5 PSI FLUCTUATION		
EQUIPMENT LOSSES, PSI		
WATER METER LOSS		**4**
BACKFLOW PREVENTER		**10**
SITE SERVICE LINE (ESTIMATE)		
PIPING SYSTEM LENGTH, FEET	50	
FITTING ALLOWANCE, FEET	12.5	
FROM STREET TO RPBP		
ZONE FRICTION LOSS FACTOR, PSI/100'	**3.0**	
TOTAL ZONE FRICTION LOSS, PSI		**1.88**
MINIMUM PRESSURE AT RPBP, PSI		**59.13**
FROM RPBP TO FURTHEST APARTMENT UNIT		
MINIMUM PRESSURE AT END PREVIOUS ZONE, PSI		**59.1**
EQUIPMENT LOSSES, PSI		
THERMOSTATIC MIXING VALVE LOSS		**4**
STATIC HEAD, PSI		
TOTAL ELEVATION GAIN, FT	30	**13.0**
PIPING FRICTION LOSSES		
PIPING SYSTEM LENGTH, FEET	150	
FITTING ALLOWANCE, FEET	22.5	
ZONE FRICTION LOSS FACTOR, PSI/100'	**3.0**	
TOTAL ZONE FRICTION LOSS, PSI		**5.175**
MINIMUM PRESSURE AT FURTHEST APARTMENT UNIT, PSI		**37.0**
FROM FURTHEST APARTMENT UNIT TO FURTHEST FIXTURE		
MINIMUM PRESSURE AT FURTHEST APARTMENT UNIT, PSI		**37.0**
PIPING FRICTION LOSSES		
RISER TO MANIFOLD, FEET	4	
FITTING ALLOWANCE, FEET	6	
FROM MANIFOLD TO FURTHEST FIXTURE	35	
ZONE FRICTION LOSS FACTOR, PSI/100'	**14.0**	
TOTAL ZONE FRICTION LOSS, PSI		**6.3**
MINIMUM PRESSURE AT FURTHEST FIXTURE, PSI		**30.7**

NO.	DATE	DESCRIPTION

REVISIONS

REED JACKSON
STATE OF WASHINGTON
REGISTERED PROFESSIONAL ENGINEER

ROBISON ENGINEERING, INC
19401 40TH AVE W., SUITE 302
LYNNWOOD, WA 98036
206.364.3343 tel
REI PROJECT NO.: 12190.01
CONTACT: JEFF MacCOLLHAM

DRAWN: JM
DESIGNED: JM
CHECKED: RJ
APPROVED: JR

PROJECT: BRADLEY HEIGHT APARTMENTS - BUILDING H
202 27TH AVE SE
PUYALLUP, WA 98374

ROBISON ENGINEERING, INC
19401 40TH AVE W. SUITE 302
LYNNWOOD, WA 98036
PHONE:(206)364-3343

PRMU202240279

DATE: 04/25/2025

SHEET TITLE: PLUMBING CALCULATIONS

SHEET NO. P0H.02

PLUMBING SCHEDULES

PIPE MATERIALS

PIPE TYPE	MATERIAL	JOINT	NOTES
WATER DISTRIBUTION PIPING	COPPER, TYPE L.	SOLDERED	2
APARTMENT WATER PIPING	PEX-A	EXPANSION OR PUSH-FIT FITTINGS	2
WASTE AND VENT PIPING	SCHEDULE 40 SOLID CORE PVC	SOLVENT CEMENT	1,3
CONDENSATE DRAIN PIPING	COPPER, TYPE M.	SOLDERED OR PROPRESS FITTINGS	

NOTES:

1. ALL SANITARY SYSTEM MATERIALS SHALL BE LISTED BY AN APPROVED LISTING AGENCY.
2. PROVIDE THERMAL EXPANSION LOOPS FOR ALL WATER PIPING IN ACCORDANCE WITH MANUFACTURER INSTRUCTIONS.
3. PROVIDE CAST IRON PIPING FOR WASTE DISCHARGE EXCEEDING 110 DEGREES FAHRENHEIT.

PIPE SIZING SCHEDULE - COPPER TYPE L AT 3.0 PSI/100 FEET

PIPE SIZE	COLD WATER, FLUSH TANK			HOT WATER		
	FIXTURE UNITS	FLOW, GPM	VELOCITY, FPS	FIXTURE UNITS	FLOW, GPM	VELOCITY, FPS
1/2"	0.8	1.8	2.4	1.0	2.0	2.8
3/4"	5.5	4.7	3.1	6.5	5.5	3.6
1"	12.8	9.8	3.8	15.2	11.2	4.4
1-1/4"	25.5	17.3	4.4	29.3	19.6	5.0
1-1/2"	46.6	27.7	5.0	46.8	27.7	5.0
2"	166.0	58.2	6.0	116.9	48.2	5.0
2-1/2"	395.0	104.0	7.0	246.9	74.4	5.0
3"	735.1	167.3	7.9	405.8	106.2	5.0
4"	1782.4	303.2	8.0	872.0	189.5	5.0
6"	6381.3	669.1	8.0	2847.0	418.2	5.0

PIPE SIZING SCHEDULE - PEX AT 14.0 PSI/100 FEET

PIPE SIZE	COLD WATER, FLUSH TANK			HOT WATER		
	FIXTURE UNITS	FLOW, GPM	VELOCITY, FPS	FIXTURE UNITS	FLOW, GPM	VELOCITY, FPS
1/2"	1.9	2.9	5.3	3.4	3.4	6.2
3/4"	9.0	7.5	6.8	11.2	8.6	7.8
1"	21.2	14.7	8.1	20.9	14.6	8.0
1-1/4"	40.8	25.3	9.3	33.5	21.8	8.0
1-1/2"	76.3	37.9	10.0	53.3	30.3	8.0
2"	199.8	65.0	10.0	134.8	52.0	8.0
2-1/2"	369.5	98.9	10.0	270.6	79.1	8.0
3"	588.9	141.0	10.0	439.0	112.8	8.0

ELECTRIC WATER HEATER

EQUIP NO.	SERVICE	GPH RECOVERY AT 100°F TR	STORAGE (GAL)	INLET/OUTLET CONNECTION	OPERATING WEIGHT (LBS)	ELECTRICAL			BASIS OF DESIGN	NOTES
						VOLTAGE	AMPS	HEATER KW		
WH-1	APARTMENTS	16	50	¾"	550	208V/3P	18.75	4.5	BRADFORD WHITE RE250T6-1NCWW	1,2,3,4,5

NOTES:

2 1. ~~PROVIDE CONDENSATE NEUTRALIZER. VENT PER~~ MANUFACTURER'S INSTRUCTIONS.
2. FOR WATER HEATER PIPING SEE DETAIL 2/P7H.00.
3. ~~UNITS SHALL BE CERTIFIED IN THE AIR QUALITY~~ MANAGEMENT DISTRICT HAVING JURISDICTION.
4. FACTORY AUTHORIZED START-UP AND OWNERS TRAINING REQUIRED. OWNER, ENGINEER, AND CONTRACTOR TO RECEIVE A COPY OF START UP REPORT.
5. ALL DOMESTIC WATER EQUIPMENT SHALL BE NSF-61 LISTED.

EXPANSION TANK

EQUIP NO.	SERVICE	CAPACITY GAL.	PRE-CHARGE PRESSURE, PSI	TANK SIZE		OPERATING WEIGHT, LBS	BASIS OF DESIGN	NOTES
				DIAMETER	HEIGHT			
ET-1	DOMESTIC HOT WATER	4.5	50	11	15	9	THERM-X-TROL ST-12	1

NOTES:

1. INSTALL PER MANUFACTURER'S RECOMMENDATIONS

NO.	DATE	DESCRIPTION
		REVISIONS

REED JACKSON STATE OF WASHINGTON REGISTERED PROFESSIONAL ENGINEER

ROBISON ENGINEERING, INC
19401 40TH AVE W, SUITE 302
LYNNWOOD, WA 98036
206.364.3343
REI PROJECT NO.: 1219-001
CONTACT: JEFF MacGILLIVRAY

DRAWN: JM
DESIGNED: JM
CHECKED: RJ
APPROVED: JR

PROJECT: BRADLEY HEIGHT APARTMENTS - BUILDING H
202 27TH AVE SE
PUYALLUP, WA 98374

ROBISON ENGINEERING, INC
19401 40TH AVE W, SUITE 302
LYNNWOOD, WA 98036
PHONE:(206)364-3343

PRMU20240279

DATE: 04/25/2025

SHEET TITLE: PLUMBING SCHEDULES

SHEET NO. P0H.03

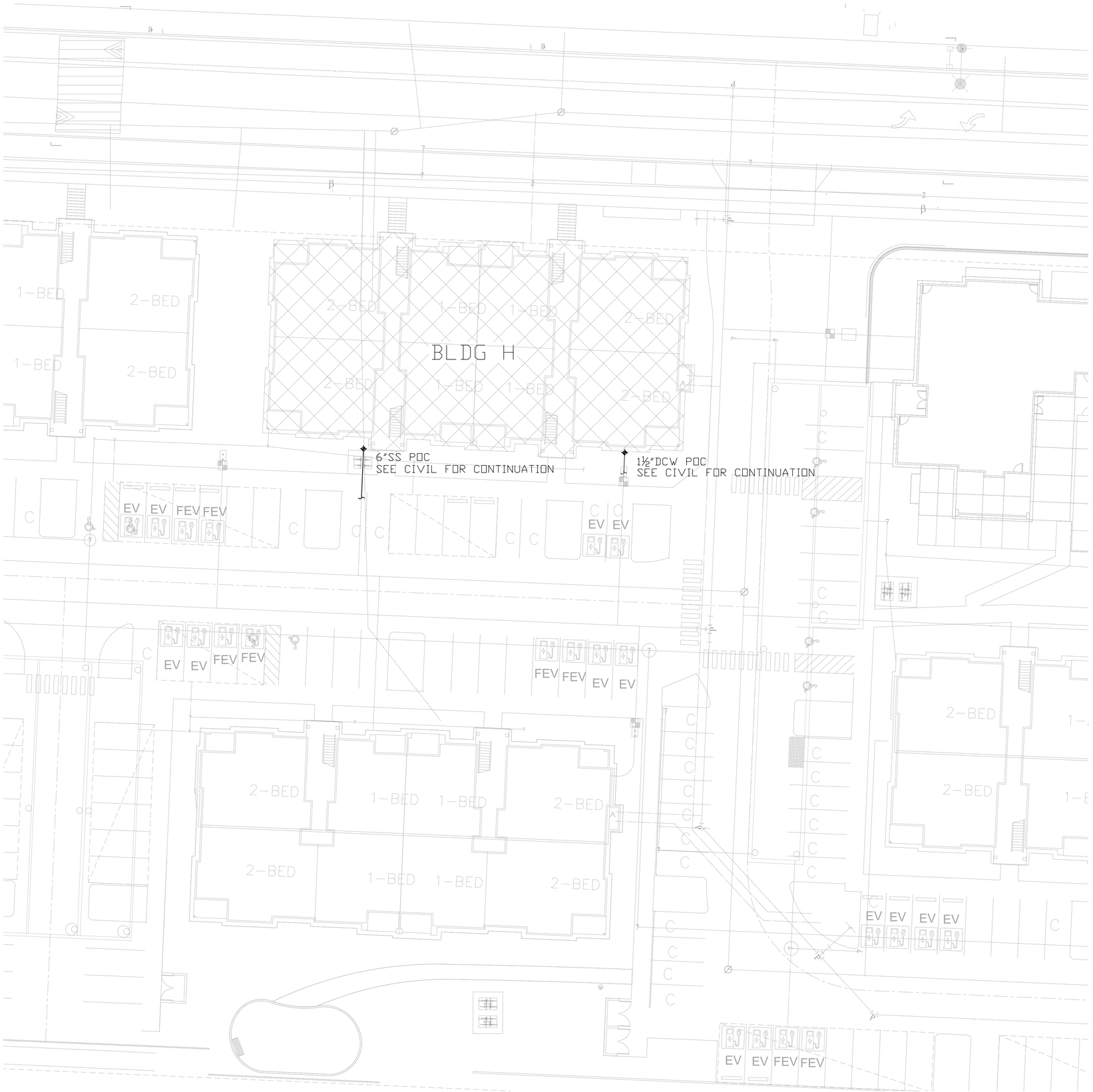

KEY PLAN

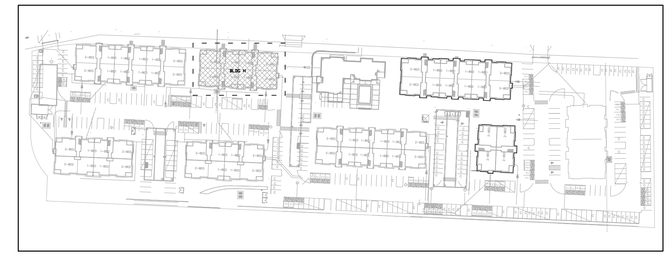

GENERAL NOTES:

1. COORDINATE SANITARY SEWER AND DOMESTIC WATER POINTS OF CONNECTION WITH CIVIL. REFER TO PERMIT PRCCP20240845.

BUILDING H SITE PLAN

SCALE: 3/4" = 1'-0"

NO.	DATE	DESCRIPTION

REVISIONS

REED JACKSON
STATE OF WASHINGTON
REGISTERED
PROFESSIONAL ENGINEER

ROBISON ENGINEERING, INC
19401 40TH AVE W., SUITE 302
LYNNWOOD, WA 98036
206.364.3343 TEL
REG PROJECT NO: 1219-001
CONTACT: JEFF MacGILLIVRAY

DRAWN: JM
DESIGNED: JM
CHECKED: RJ
APPROVED: JR

PROJECT: BRADLEY HEIGHT APARTMENTS - BUILDING H
202 27TH AVE SE
PUYALLUP, WA 98374

PRMU20240279

ROBISON ENGINEERING, INC
19401 40TH AVE W. SUITE 302
LYNNWOOD, WA 98036
PHONE:(206)364-3343

DATE: 04/25/2025

SHEET TITLE: BUILDING H SITE PLAN

SHEET NO. P1H.00

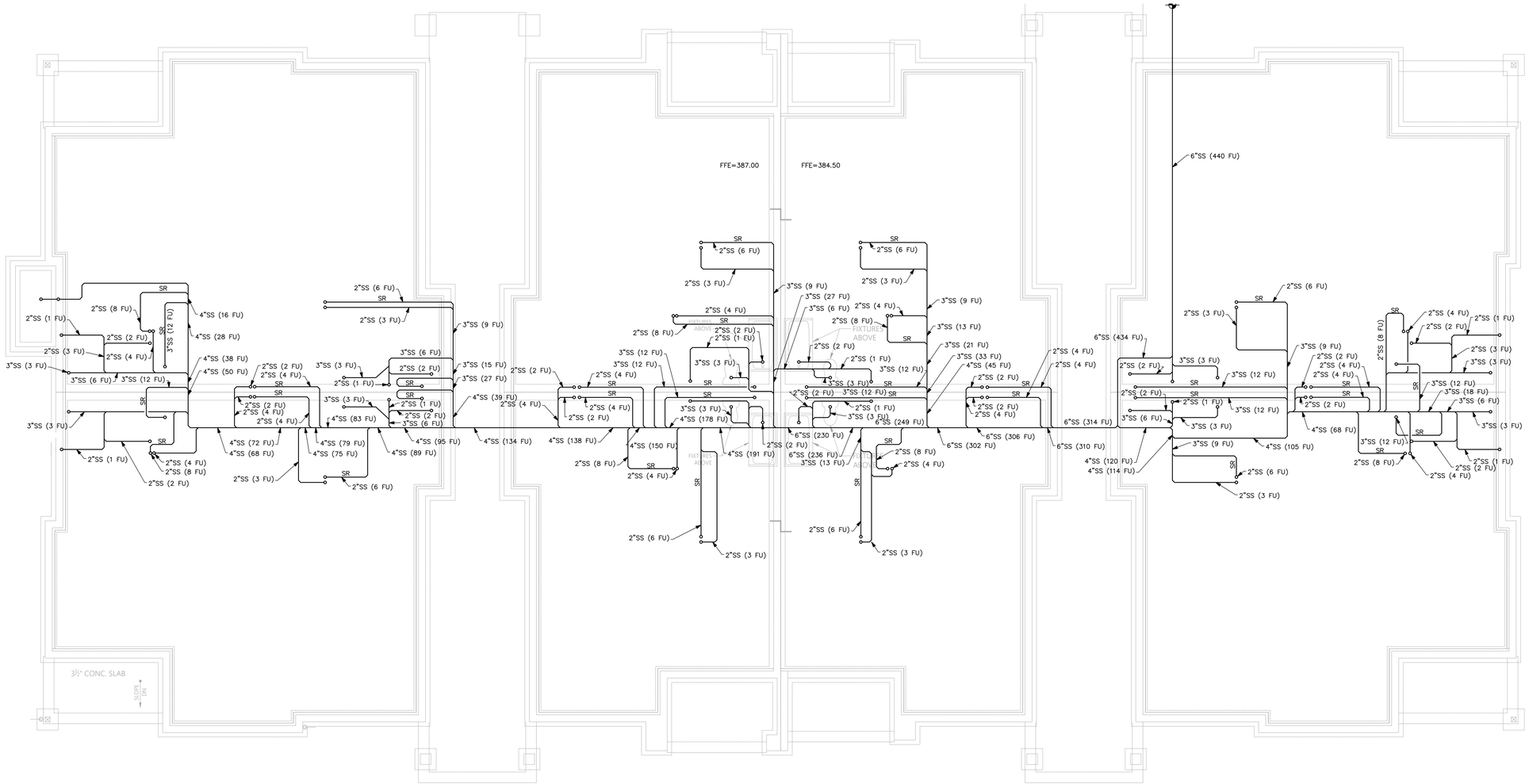

GENERAL NOTES

1. PROVIDE TRAP PRIMERS FOR ALL FLOOR DRAINS PER 2018 UPC 1007.1. SEE DETAIL 5/P7H.01.
2. WASTE & VENT SIZING: WASTE & VENT PIPING IS SIZED PER 2018 UPC TABLE 703.2. DRAINAGE PIPING SHALL BE SLOPED AT 1/4" PER FOOT OR 2%. WHERE IT IS IMPRACTICAL TO OBTAIN A SLOPE OF 2% DUE TO THE DEPTH OF THE STREET SEWER OR TO STRUCTURAL FEATURES OF THE BUILDING, DRAINAGE PIPING 4" AND LARGER MAY BE SLOPED AT 1/8" PER FOOT OR 1% WITH APPROVAL FROM THE AHJ.

PIPE SIZE	VERTICAL	HORIZONTAL	VENT
1½"	2 DFU	1 DFU	8 DFU
2"	16 DFU	8 DFU	24 DFU
3"	48 DFU	35 DFU	84 DFU
4"	256 DFU	172 DFU	256 DFU
6"	1,380 DFU	576 DFU	1,380 DFU
8"	3,600 DFU	2,112 DFU	3,600 DFU

FLAG NOTES

NOT USED

BACKWATER VALVE ANALYSIS – SS POC:

IF UPSTREAM MANHOLE RIM ELEVATION IS HIGHER THAN FINISH FLOOR ELEVATION CONTACT ENGINEER FOR FURTHER EVALUATION.

UNDERSLAB WASTE & VENT PLAN

SCALE: 3/16" = 1–'0"

N

NO.	DATE	DESCRIPTION

REVISIONS

REED JACKSON
STATE OF WASHINGTON
REGISTERED PROFESSIONAL ENGINEER

ROBISON ENGINEERING, INC
19401 40TH AVE W, SUITE 302
LYNNWOOD, WA 98036
206-364-3343 tel.
REI PROJECT NO.: 1219-001
CONTACT: JEFF MacGILLIVRAY

DRAWN: JM
DESIGNED: JM
CHECKED: RJ
APPROVED: JR

PROJECT: BRADLEY HEIGHT APARTMENTS - BUILDING H
202 27TH AVE SE
PUYALLUP, WA 98374

ROBISON ENGINEERING, INC
19401 40TH AVE W, SUITE 302
LYNNWOOD, WA 98036
PHONE:(206)364-3343

PRMU20240279

DATE: 04/25/2025

SHEET TITLE: UNDERSLAB WASTE & VENT PLAN

SHEET NO. P2H.00

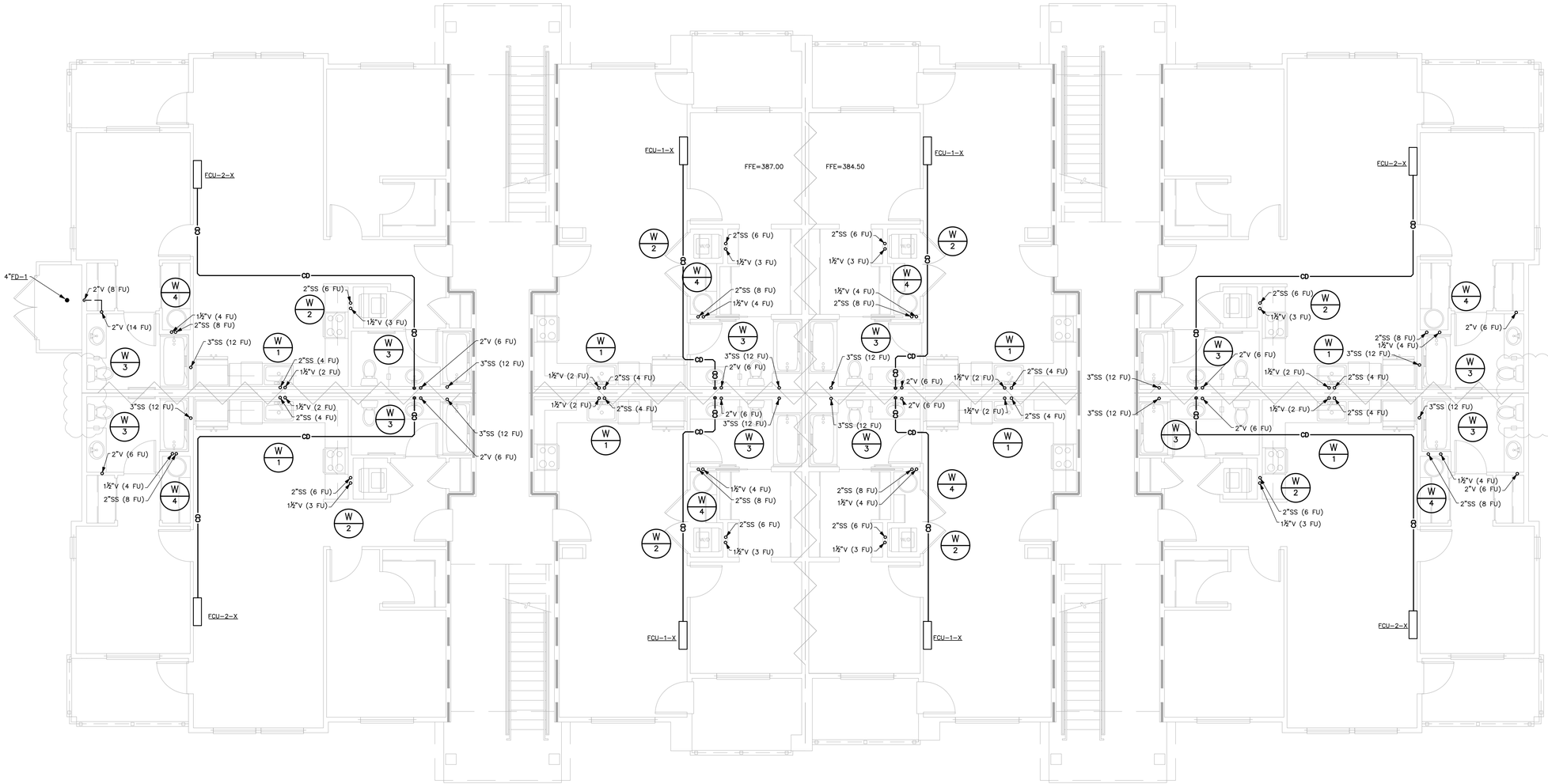

GENERAL NOTES

1. PROVIDE TRAP PRIMERS FOR ALL FLOOR DRAINS PER 2018 UPC 1007.1. SEE DETAIL 5/P7H.01.
2. WASTE & VENT SIZING: WASTE & VENT PIPING IS SIZED PER 2018 UPC TABLE 703.2. DRAINAGE PIPING SHALL BE SLOPED AT 1/4" PER FOOT OR 2%. WHERE IT IS IMPRACTICAL TO OBTAIN A SLOPE OF 2% DUE TO THE DEPTH OF THE STREET SEWER OR TO STRUCTURAL FEATURES OF THE BUILDING, DRAINAGE PIPING 4" AND LARGER MAY BE SLOPED AT 1/8" PER FOOT OR 1% WITH APPROVAL FROM THE AHJ.

PIPE SIZE	VERTICAL	HORIZONTAL	VENT
1½"	2 DFU	1 DFU	8 DFU
2"	16 DFU	8 DFU	24 DFU
3"	48 DFU	35 DFU	84 DFU
4"	256 DFU	172 DFU	256 DFU
6"	1,380 DFU	576 DFU	1,380 DFU
8"	3,600 DFU	2,112 DFU	3,600 DFU

FLAG NOTES

NOT USED

LEVEL 1 WASTE & VENT PLAN

SCALE: 3/16" = 1-'0"

N

NO.	DATE	DESCRIPTION

REVISIONS

REED JACKSON
STATE OF WASHINGTON
REGISTERED
PROFESSIONAL ENGINEER

ROBISON ENGINEERING, INC
19401 40TH AVE W., SUITE 302
LYNNWOOD, WA 98036
206.364.3343 tel.
REI PROJECT NO.: 1219-001
CONTACT: JEFF MacGILLIVRAY

DRAWN: JM
DESIGNED: JM
CHECKED: RJ
APPROVED: JR

PROJECT: BRADLEY HEIGHT APARTMENTS - BUILDING H
202 27TH AVE SE
PUYALLUP, WA 98374

PRMU20240279

ROBISON ENGINEERING, INC
19401 40TH AVE W. SUITE 302
LYNNWOOD, WA 98036
PHONE:(206)364-3343

DATE: 04/25/2025

SHEET TITLE: LEVEL 1 WASTE & VENT PLAN

SHEET NO. P2H.01

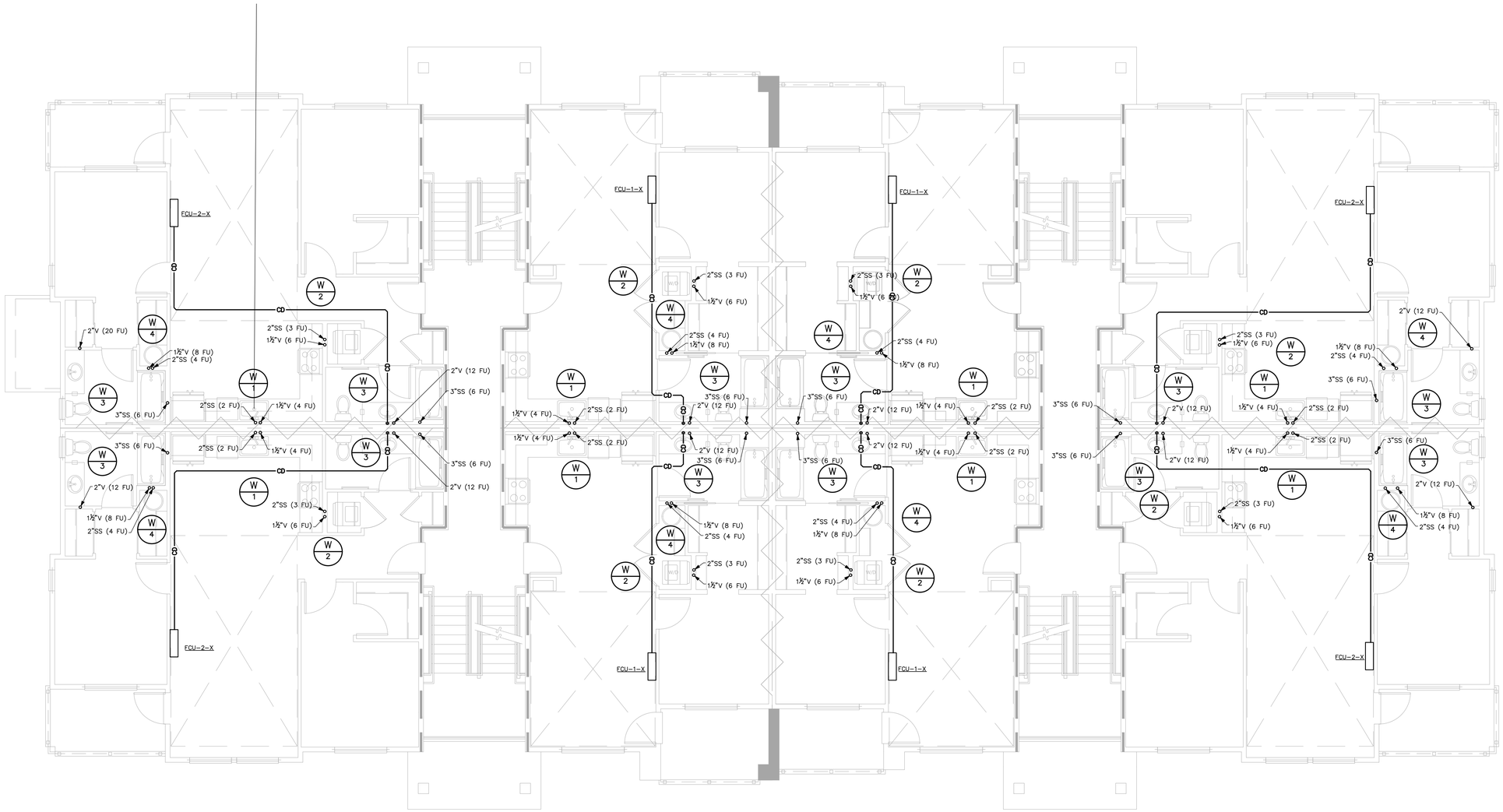

GENERAL NOTES

1. PROVIDE TRAP PRIMERS FOR ALL FLOOR DRAINS PER 2018 UPC 1007.1. SEE DETAIL 5/P7H.01.
2. WASTE & VENT SIZING: WASTE & VENT PIPING IS SIZED PER 2018 UPC TABLE 703.2. DRAINAGE PIPING SHALL BE SLOPED AT 1/4" PER FOOT OR 2%. WHERE IT IS IMPRACTICAL TO OBTAIN A SLOPE OF 2% DUE TO THE DEPTH OF THE STREET SEWER OR TO STRUCTURAL FEATURES OF THE BUILDING, DRAINAGE PIPING 4" AND LARGER MAY BE SLOPED AT 1/8" PER FOOT OR 1% WITH APPROVAL FROM THE AHJ.

PIPE SIZE	VERTICAL	HORIZONTAL	VENT
1½"	2 DFU	1 DFU	8 DFU
2"	16 DFU	8 DFU	24 DFU
3"	48 DFU	35 DFU	84 DFU
4"	256 DFU	172 DFU	256 DFU
6"	1,380 DFU	576 DFU	1,380 DFU
8"	3,600 DFU	2,112 DFU	3,600 DFU

FLAG NOTES

NOT USED

LEVEL 2 WASTE & VENT PLAN

SCALE: 3/16" = 1-'0"

City of Puyallup
Development & Permitting Services
SHARE review
Building | Planning
Engineering | Public Works
Fire | Parks

NO.	DATE	DESCRIPTION
		REVISIONS

REED JACKSON
STATE OF WASHINGTON
REGISTERED PROFESSIONAL ENGINEER

ROBISON ENGINEERING, INC
19401 40TH AVE W., SUITE 302
LYNNWOOD, WA 98036
PHONE:(206)364-3343
REFRIGERENT NO.: 12119001
CONTACT: JEFF MacGILLIVRAY

DRAWN: JM
DESIGNED: JM
CHECKED: RJ
APPROVED: JR

PROJECT: BRADLEY HEIGHT APARTMENTS - BUILDING H
202 27TH AVE SE
PUYALLUP, WA 98374

ROBISON ENGINEERING, INC
19401 40TH AVE W, SUITE 302
LYNNWOOD, WA 98036
PHONE:(206)364-3343

PRMU20240279

DATE: 04/25/2025

SHEET TITLE: LEVEL 2 WASTE & VENT PLAN

SHEET NO. P2H.02

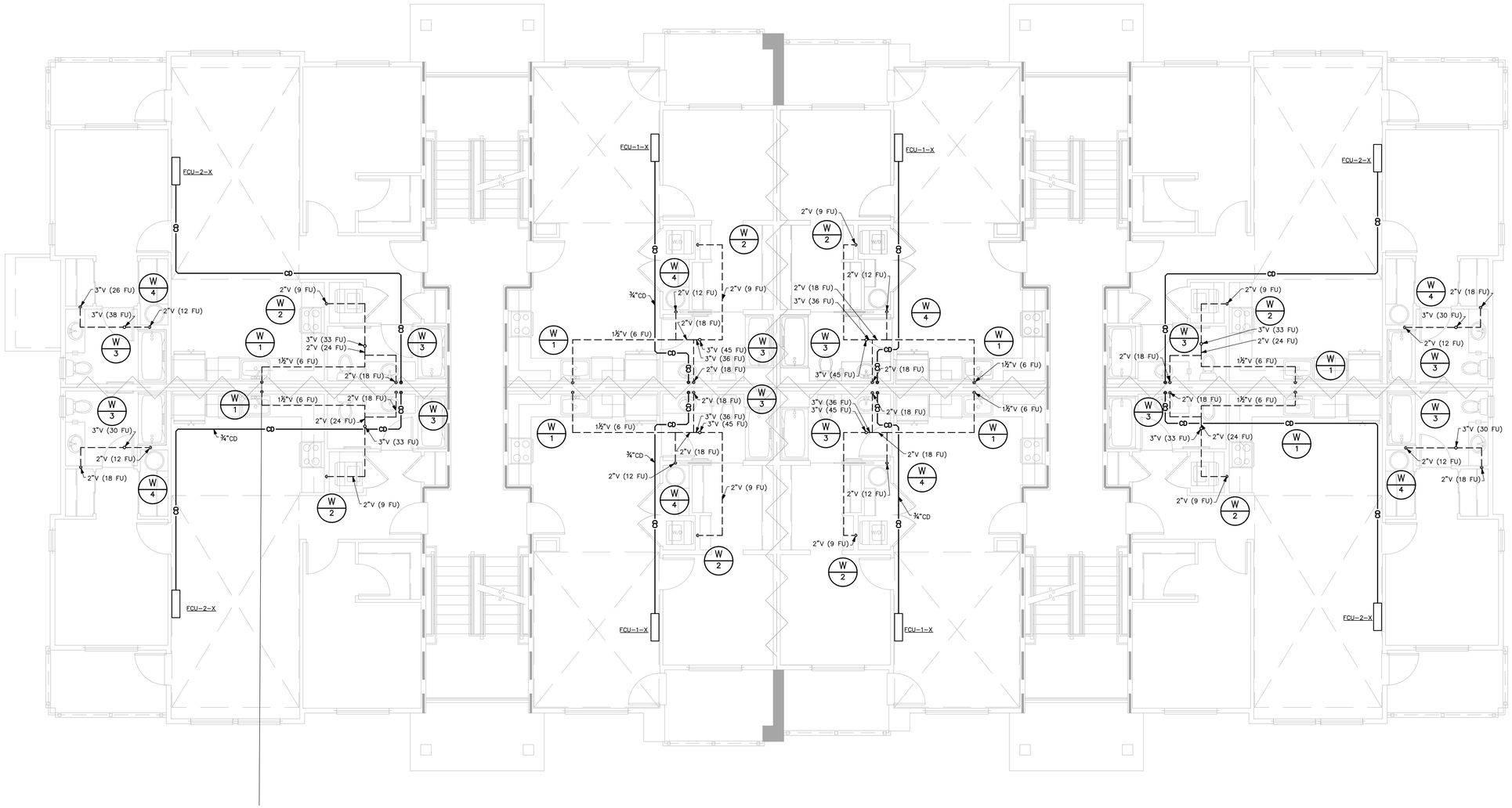

GENERAL NOTES

1. PROVIDE TRAP PRIMERS FOR ALL FLOOR DRAINS PER 2018 UPC 1007.1. SEE DETAIL 5/P7H.01.
2. WASTE & VENT SIZING: WASTE & VENT PIPING IS SIZED PER 2018 UPC TABLE 703.2. DRAINAGE PIPING SHALL BE SLOPED AT 1/4" PER FOOT OR 2%. WHERE IT IS IMPRACTICAL TO OBTAIN A SLOPE OF 2% DUE TO THE DEPTH OF THE STREET SEWER OR TO STRUCTURAL FEATURES OF THE BUILDING, DRAINAGE PIPING 4" AND LARGER MAY BE SLOPED AT 1/8" PER FOOT OR 1% WITH APPROVAL FROM THE AHJ.

PIPE SIZE	VERTICAL	HORIZONTAL	VENT
1½"	2 DFU	1 DFU	8 DFU
2"	16 DFU	8 DFU	24 DFU
3"	48 DFU	35 DFU	84 DFU
4"	256 DFU	172 DFU	256 DFU
6"	1,380 DFU	576 DFU	1,380 DFU
8"	3,600 DFU	2,112 DFU	3,600 DFU

FLAG NOTES

NOT USED

LEVEL 3 WASTE & VENT PLAN

SCALE: 3/16" = 1-'0"

N

NO.	DATE	DESCRIPTION

REVISIONS

REED JACKSON STATE OF WASHINGTON REGISTERED PROFESSIONAL ENGINEER

ROBISON ENGINEERING, INC
19401 40TH AVE W., SUITE 302
LYNNWOOD, WA 98036
206-364-3343 TEL
REG PROJECT NO.: 1219-001
CONTACT: JEFF MacGILLIVRAY

DRAWN: JM
DESIGNED: JM
CHECKED: RJ
APPROVED: JR

PROJECT: BRADLEY HEIGHT APARTMENTS - BUILDING H
202 27TH AVE SE
PUYALLUP, WA 98374

PRMU20240279

ROBISON ENGINEERING, INC
19401 40TH AVE W. SUITE 302
LYNNWOOD, WA 98036
PHONE:(206)364-3343

DATE: 04/25/2025

SHEET TITLE: LEVEL 3 WASTE & VENT PLAN

SHEET NO. P2H.03

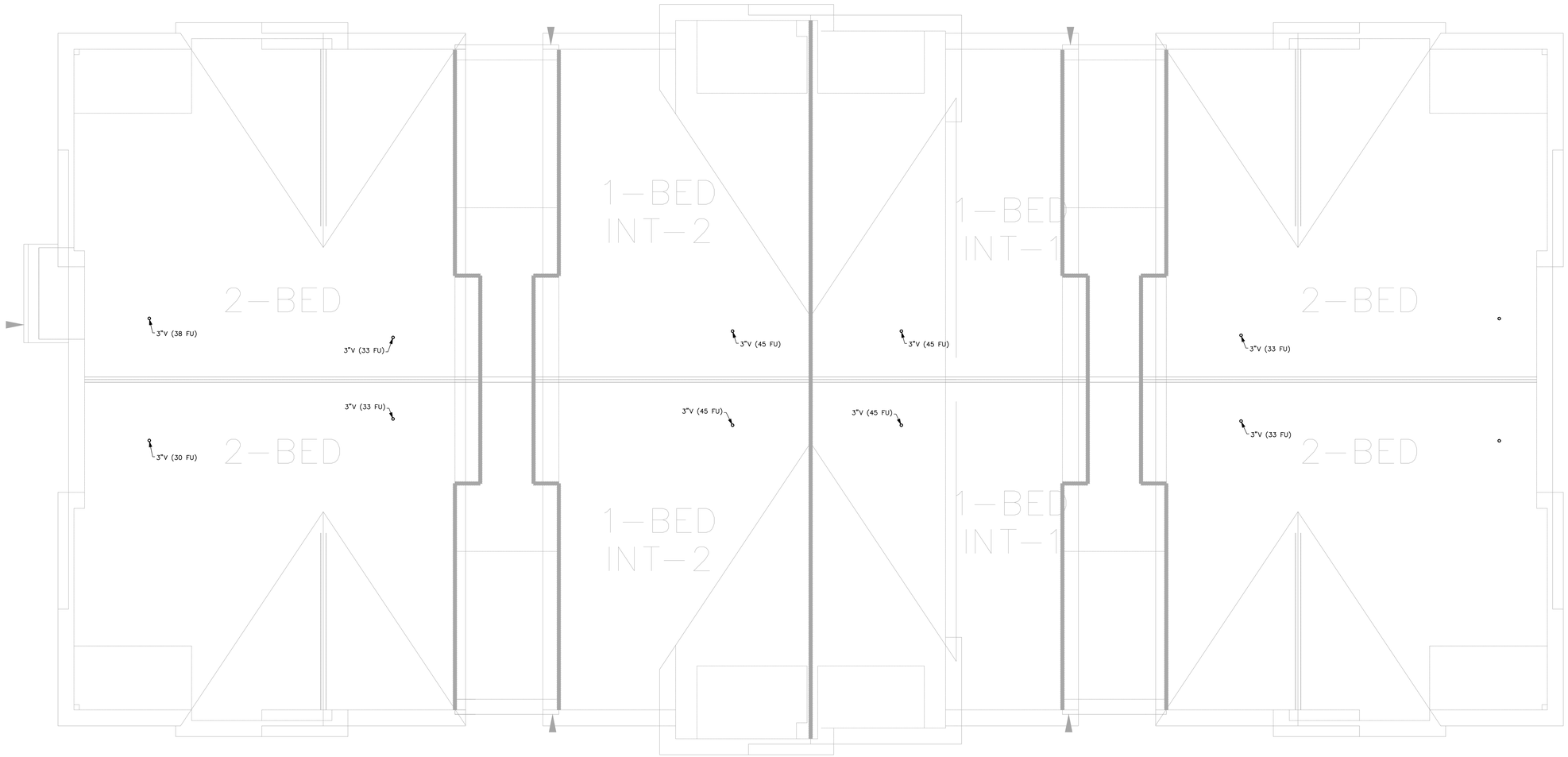

GENERAL NOTES

1. PROVIDE TRAP PRIMERS FOR ALL FLOOR DRAINS PER 2018 UPC 1007.1. SEE DETAIL 5/P7H.01.
2. WASTE & VENT SIZING: WASTE & VENT PIPING IS SIZED PER 2018 UPC TABLE 703.2. DRAINAGE PIPING SHALL BE SLOPED AT 1/4" PER FOOT OR 2%. WHERE IT IS IMPRACTICAL TO OBTAIN A SLOPE OF 2% DUE TO THE DEPTH OF THE STREET SEWER OR TO STRUCTURAL FEATURES OF THE BUILDING, DRAINAGE PIPING 4" AND LARGER MAY BE SLOPED AT 1/8" PER FOOT OR 1% WITH APPROVAL FROM THE AHJ.

PIPE SIZE	VERTICAL	HORIZONTAL	VENT
1½"	2 DFU	1 DFU	8 DFU
2"	16 DFU	8 DFU	24 DFU
3"	48 DFU	35 DFU	84 DFU
4"	256 DFU	172 DFU	256 DFU
6"	1,380 DFU	576 DFU	1,380 DFU
8"	3,600 DFU	2,112 DFU	3,600 DFU

FLAG NOTES

NOT USED

ROOF WASTE & VENT PLAN

SCALE: 3/16" = 1-'0"

NO.	DATE	DESCRIPTION

REVISIONS

REED JACKSON
STATE OF WASHINGTON
REGISTERED
PROFESSIONAL ENGINEER

ROBISON ENGINEERING, INC
19401 40TH AVE W., SUITE 302
LYNNWOOD, WA 98036
206.364.3343 tel
REI PROJECT NO.: 1219-001
CONTACT: JEFF MacDOUGALL

DRAWN: JM
DESIGNED: JM
CHECKED: RJ
APPROVED: JR

PROJECT: BRADLEY HEIGHT APARTMENTS - BUILDING H
202 27TH AVE SE
PUYALLUP, WA 98374

ROBISON ENGINEERING, INC
19401 40TH AVE W., SUITE 302
LYNNWOOD, WA 98036
PHONE:(206)364-3343

PRMU20240279

DATE: 04/25/2025

SHEET TITLE: ROOF WASTE & VENT PLAN

SHEET NO. P2H.04

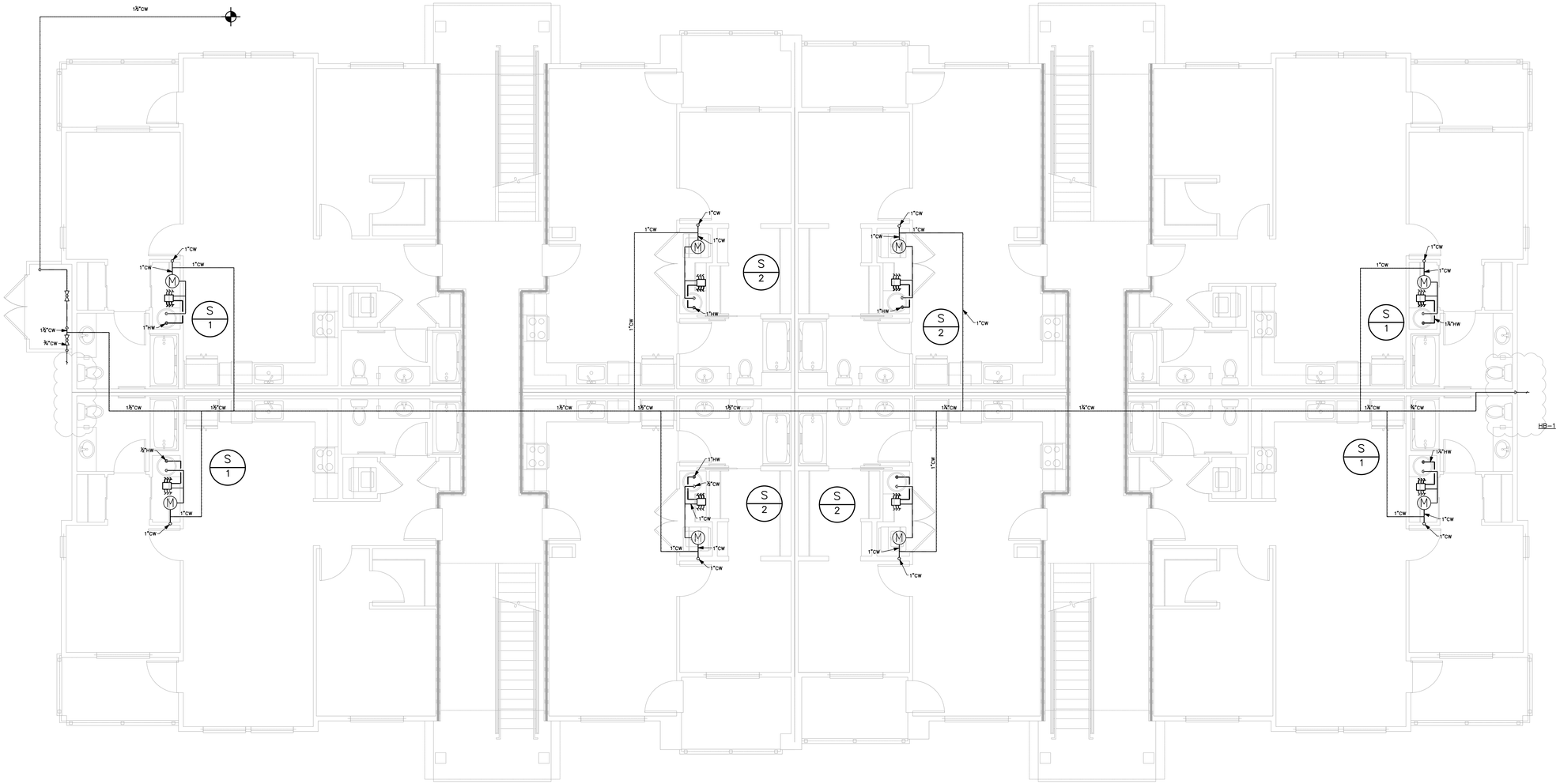

GENERAL NOTES

2

1. PROVIDE EXPANSION LOOPS FOR ALL WATER PIPING PER THE MANUFACTURER'S INSTRUCTIONS. SEE DETAIL 3/P7H.01.
2. INSTALL HEAT TRACE ON SUPPLY PIPE IN NON CONDITIONED SPACES.

FLAG NOTES

NOT USED

LEVEL 1 PLUMBING SUPPLY PLAN

2

SCALE: 3/16" = 1-'0"

N

City of Puyallup
Community & Economic Development
ISSUED PERMIT
Building | Planning
Engineering | Public Works
Fire | Parks

NO.	DATE	DESCRIPTION
		REVISIONS

REED JACKSON
STATE OF WASHINGTON
REGISTERED
PROFESSIONAL ENGINEER

ROBISON
ENGINEERING, INC
19401 40TH AVE W, SUITE 302
LYNNWOOD, WA 98036
206.363.3433
REI PROJECT NO.: 1219-001
CONTACT: JEFF MacCOLLAM

DRAWN: JM
DESIGNED: JM
CHECKED: RJ
APPROVED: JR

PROJECT:
BRADLEY HEIGHT APARTMENTS - BUILDING H
202 27TH AVE SE
PUYALLUP, WA 98374

ROBISON
ENGINEERING, INC
19401 40TH AVE W, SUITE 302
LYNNWOOD, WA 98036
PHONE:(206)363-3343

PRMU20240279

DATE: 04/25/2025

SHEET TITLE:
LEVEL 1
PLUMBING
SUPPLY PLAN

SHEET NO.
P3H.01

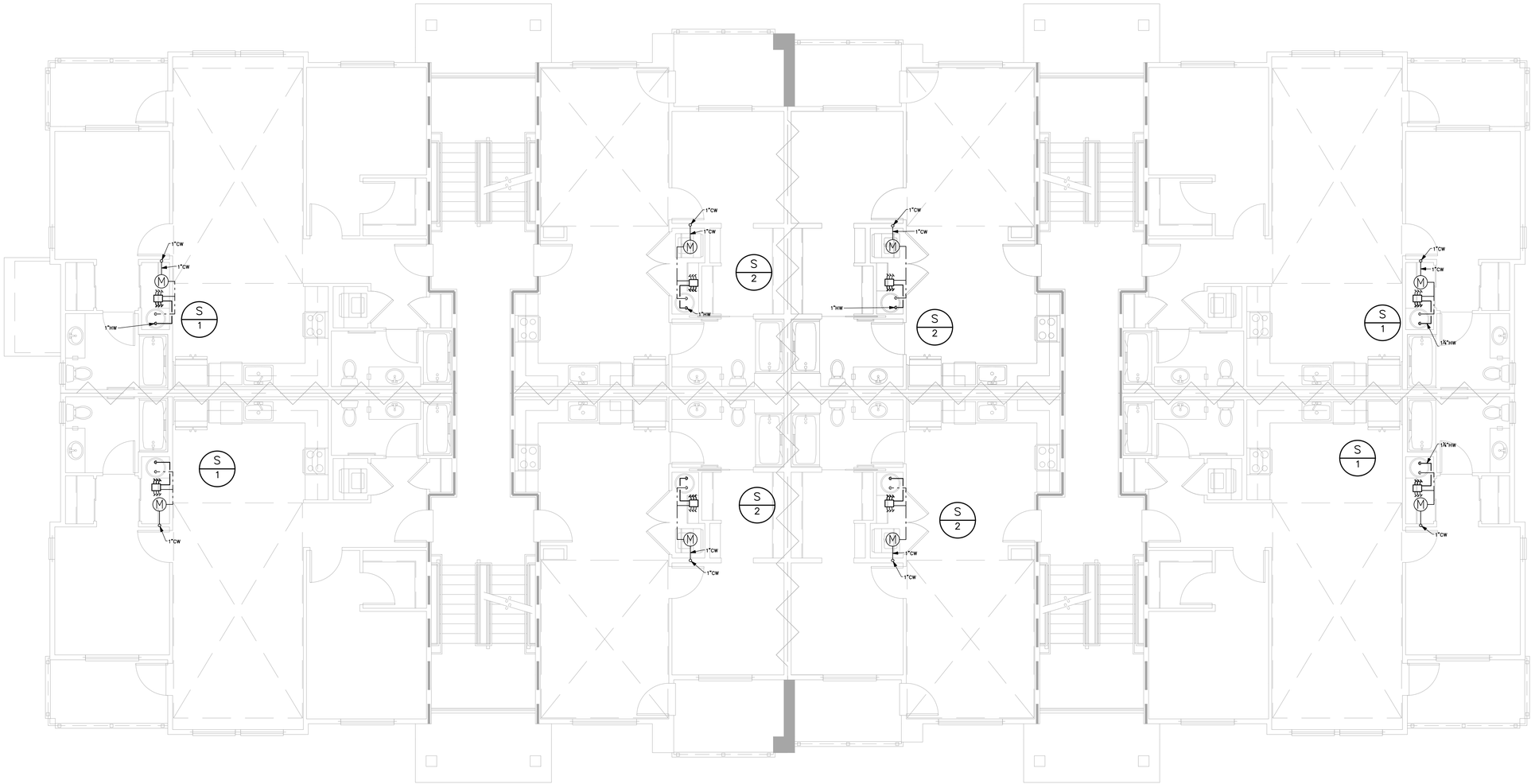

GENERAL NOTES

1. PROVIDE EXPANSION LOOPS FOR ALL WATER PIPING PER THE MANUFACTURER'S INSTRUCTIONS. SEE DETAIL 3/P7H.01.
2. INSTALL HEAT TRACE ON SUPPLY PIPE IN NON CONDITIONED SPACES.

FLAG NOTES

NOT USED

LEVEL 2 PLUMBING SUPPLY PLAN

SCALE: 3/16" = 1-'0"

N

NO.	DATE	DESCRIPTION

REVISIONS

REED JACKSON
STATE OF WASHINGTON
REGISTERED
PROFESSIONAL ENGINEER

ROBISON ENGINEERING, INC
19401 40TH AVE W., SUITE 302
LYNNWOOD, WA 98036
206.364.3343 tel.
RE: PROJECT NO.: 1219-001
CONTACT: JEFF MacGILLIVRAY

DRAWN: JM
DESIGNED: JM
CHECKED: RJ
APPROVED: JR

PROJECT: BRADLEY HEIGHT APARTMENTS - BUILDING H
202 27TH AVE SE
PUYALLUP, WA 98374

PRMU20240279

ROBISON ENGINEERING, INC
19401 40TH AVE W. SUITE 302
LYNNWOOD, WA 98036
PHONE:(206)364-3343

DATE: 04/25/2025

SHEET TITLE: LEVEL 2 PLUMBING SUPPLY PLAN

SHEET NO. P3H.02

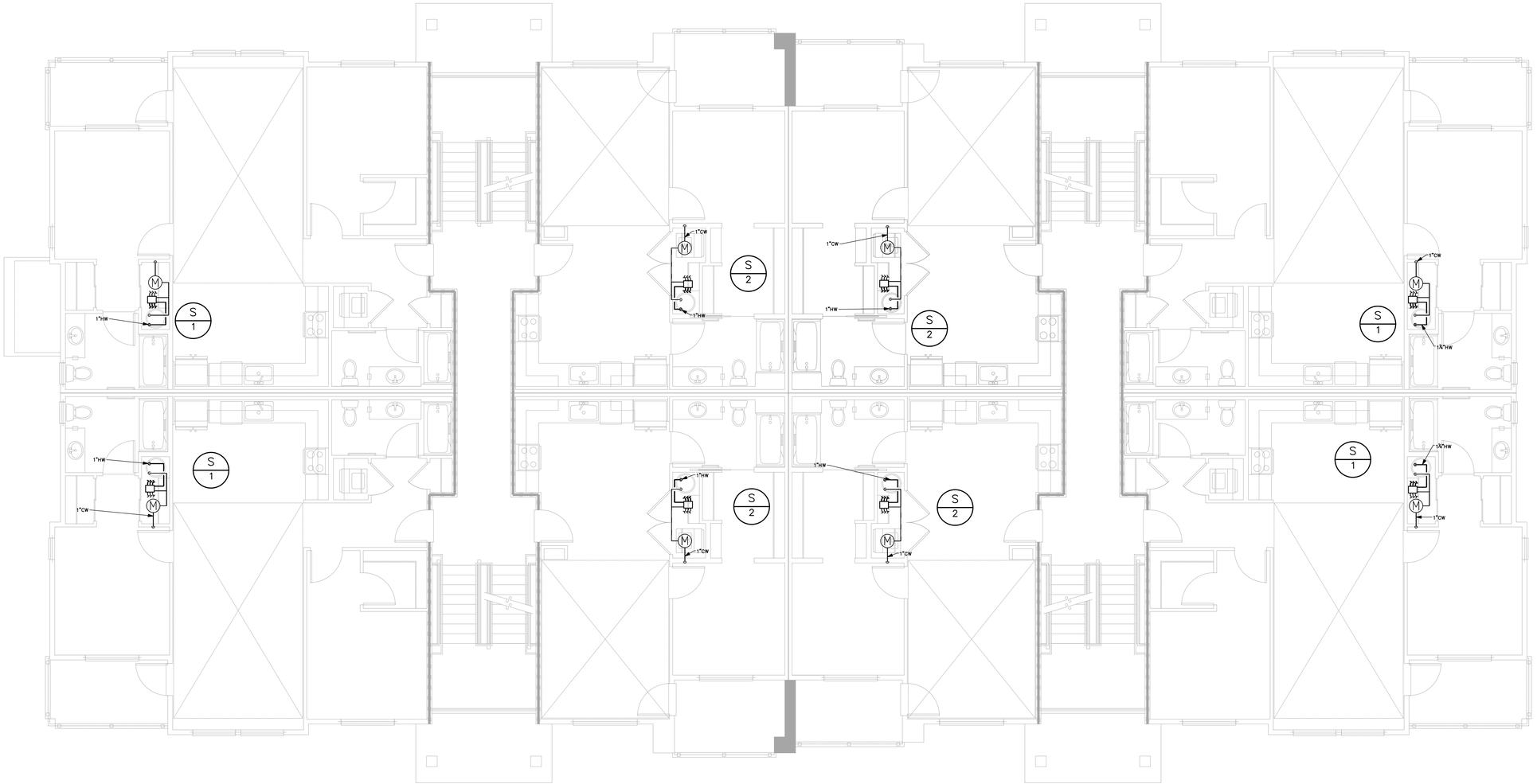

GENERAL NOTES

1. PROVIDE EXPANSION LOOPS FOR ALL WATER PIPING PER THE MANUFACTURER'S INSTRUCTIONS. SEE DETAIL 3/P7H.01.
2. INSTALL HEAT TRACE ON SUPPLY PIPE IN NON CONDITIONED SPACES.

FLAG NOTES

NOT USED

LEVEL 3 PLUMBING SUPPLY PLAN

SCALE: 3/16" = 1-'0"

N

NO.	DATE	DESCRIPTION

REVISIONS

REED JACKSON
STATE OF WASHINGTON
REGISTERED
PROFESSIONAL ENGINEER

ROBISON ENGINEERING, INC
19401 40TH AVE W., SUITE 302
LYNNWOOD, WA 98036
206-364-3343 tel.
REI PROJECT NO.: 1219-001
CONTACT: JEFF MacGILLIVRAY

DRAWN: JM
DESIGNED: JM
CHECKED: RJ
APPROVED: JR

PROJECT: BRADLEY HEIGHT APARTMENTS - BUILDING H
202 27TH AVE SE
PUYALLUP, WA 98374

PRMU20240279

ROBISON ENGINEERING, INC
19401 40TH AVE W. SUITE 302
LYNNWOOD, WA 98036
PHONE:(206)364-3343

DATE: 04/25/2025

SHEET TITLE: LEVEL 3 PLUMBING SUPPLY PLAN

SHEET NO. P3H.03

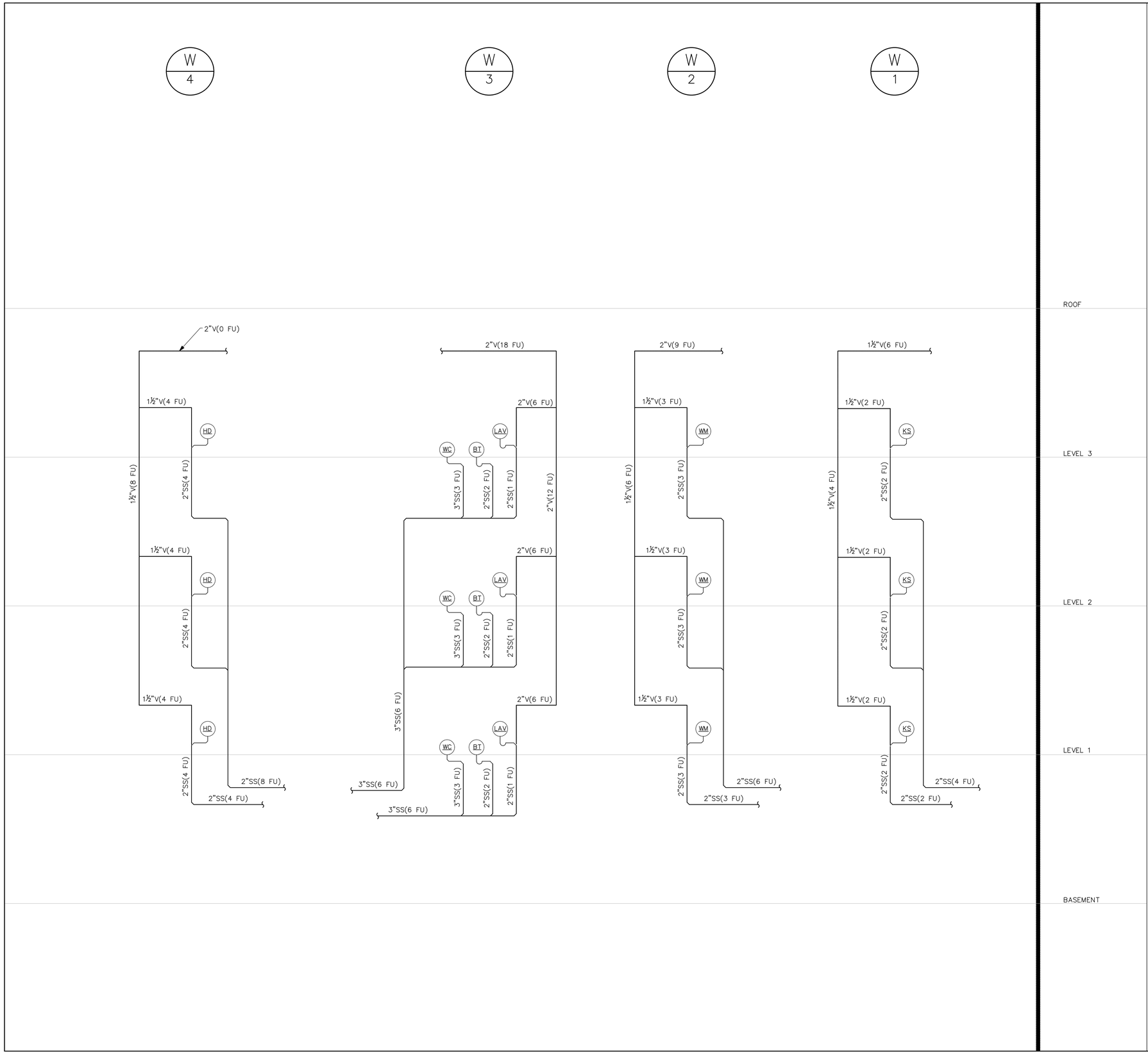

GENERAL NOTES

W/# = WASTE & VENT RISER IDENTIFICATION (I.E. RISER "#"). REFER TO P2 SERIES FOR FLOOR PLANS.

1. PROVIDE TRAP PRIMERS FOR ALL FLOOR DRAINS AND HUB DRAINS PER **2018 UPC** 1007.1. SEE DETAIL **5/P7H.01**.
2. WASTE & VENT SIZING: WASTE & VENT PIPING IS SIZED PER 2015 SPC TABLE 703.2. DRAINAGE PIPING SHALL BE SLOPED AT 1/4" PER FOOT OR 2%. WHERE IT IS IMPRACTICAL TO OBTAIN A SLOPE OF 2% DUE TO THE DEPTH OF THE STREET SEWER OR TO STRUCTURAL FEATURES OF THE BUILDING, DRAINAGE PIPING MAY BE SLOPED AT 1/8" PER FOOT OR 1% WITH APPROVAL FROM THE AHJ.

PIPE SIZE	VERTICAL	HORIZONTAL	VENT
1½"	2 DFU	1 DFU	8 DFU
2"	16 DFU	8 DFU	24 DFU
3"	48 DFU	35 DFU	84 DFU
4"	256 DFU	172 DFU	256 DFU
6"	1,380 DFU	576 DFU	1,380 DFU
8"	3,600 DFU	2,112 DFU	3,600 DFU

SHEET NOTES (X)

1.

ABBREVIATION LEGEND:

LV = LAVATORY	(1 DFU)
BT = BATHTUB	(2 DFU)
SH = SHOWER	(2 DFU)
KS = KITCHEN SINK WITH DISHWASHER	(2 DFU)
WB = WASHER BOX	(3 DFU)
WC = WATER CLOSET	(3 DFU)
FD = FLOOR DRAIN	(2 DFU)
FS = FLOOR SINK	(4 DFU)
HD = HUB DRAIN	(8 DFU)

NO.	DATE	DESCRIPTION

REVISIONS

REED JACKSON STATE OF WASHINGTON REGISTERED PROFESSIONAL ENGINEER

ROBISON ENGINEERING, INC
19401 40TH AVE W, SUITE 302
LYNNWOOD, WA 98036
206.364.3343 TEL
REI PROJECT NO. 1219001
CONTACT: JEFF MacCALLAWAY

DRAWN: JM
DESIGNED: JM
CHECKED: RJ
APPROVED: JR

PROJECT: BRADLEY HEIGHT APARTMENTS - BUILDING H
202 27TH AVE SE
PUYALLUP, WA 98374

PRMU20240279

ROBISON ENGINEERING, INC
19401 40TH AVE W, SUITE 302
LYNNWOOD, WA 98036
PHONE:(206)364-3343

DATE: 04/25/2025

SHEET TITLE: WASTE & VENT RISER DIAGRAMS

SHEET NO. P4H.00

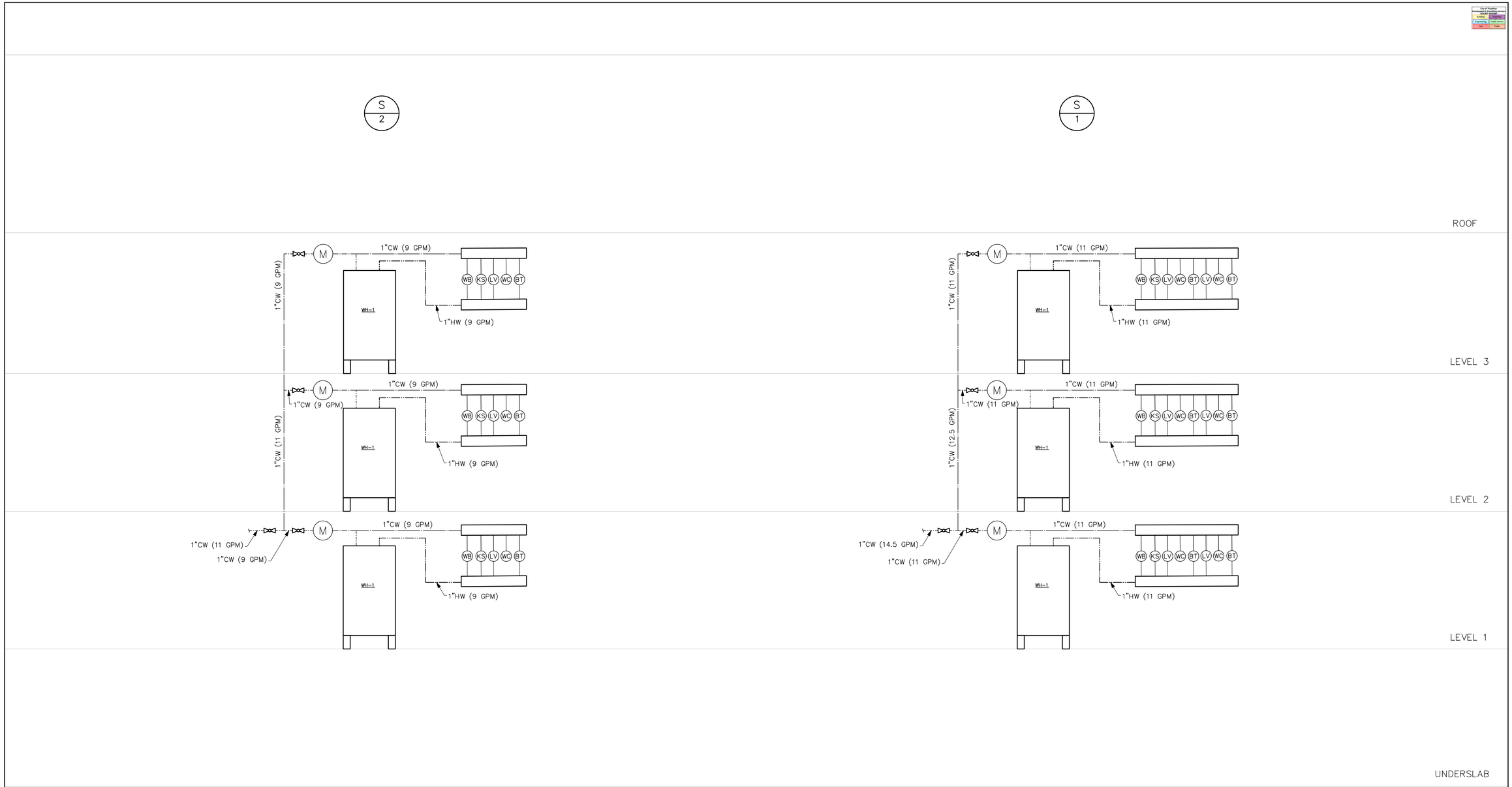

GENERAL NOTES

S/# = SUPPLY RISER IDENTIFICATION (I.E. RISER "#"). REFER TO P3 SERIES FOR FLOOR PLANS.

1. PROVIDE TRAP PRIMERS FOR ALL FLOOR DRAINS AND HUB DRAINS PER 2021 UPC 1007.1. SEE DETAIL 5/P7H.01
2. WATER PIPES ARE SIZED PER THE WATER SUPPLY PRESSURE CALCULATION ON P0H.02.

ABBREVIATION LEGEND:

LV = LAVATORY	(0.75 WSFU)
BT = BATHTUB	(4 WSFU)
SH = SHOWER	(2 WSFU)
KS = KITCHEN SINK WITH DISHWASHER	(3 WSFU)
WB = WASHER BOX	(4 WSFU)
WC = WATER CLOSET	(2.5 WSFU)

PIPE SIZING SCHEDULE - PEX AT 14.0 PSI/100 FEET

PIPE SIZE	COLD WATER, FLUSH TANK			HOT WATER		
	FIXTURE UNITS	FLOW, GPM	VELOCITY, FPS	FIXTURE UNITS	FLOW, GPM	VELOCITY, FPS
1/2"	1.9	2.9	5.3	3.4	3.4	6.2
3/4"	9.0	7.5	6.8	11.2	8.6	7.8
1"	21.2	14.7	8.1	20.9	14.6	8.0
1-1/4"	40.8	25.3	9.3	33.5	21.8	8.0
1-1/2"	76.3	37.9	10.0	53.3	30.3	8.0
2"	199.8	65.0	10.0	134.8	52.0	8.0
2-1/2"	369.5	98.9	10.0	270.6	79.1	8.0
3"	588.9	141.0	10.0	439.0	112.8	8.0

PIPE SIZING SCHEDULE - COPPER TYPE L AT 3.0 PSI/100 FEET

PIPE SIZE	COLD WATER, FLUSH TANK			HOT WATER		
	FIXTURE UNITS	FLOW, GPM	VELOCITY, FPS	FIXTURE UNITS	FLOW, GPM	VELOCITY, FPS
1/2"	0.8	1.8	2.4	1.0	2.0	2.8
3/4"	5.5	4.7	3.1	6.5	5.5	3.6
1"	12.8	9.8	3.8	15.2	11.2	4.4
1-1/4"	25.5	17.3	4.4	29.3	19.6	5.0
1-1/2"	46.6	27.7	5.0	46.8	27.7	5.0
2"	166.0	58.2	6.0	116.9	48.2	5.0
2-1/2"	395.0	104.0	7.0	246.9	74.4	5.0
3"	735.1	167.3	7.9	405.8	106.2	5.0
4"	1782.4	303.2	8.0	872.0	189.5	5.0
6"	6381.3	669.1	8.0	2847.0	418.2	5.0

NO.	DATE	DESCRIPTION

REVISIONS

REED JACKSON STATE OF WASHINGTON REGISTERED PROFESSIONAL ENGINEER

ROBISON ENGINEERING, INC
19401 40TH AVE W., SUITE 302
LYNNWOOD, WA 98036
206.364.3343 TEL
REI PROJECT NO.: 1219-001
CONTACT: JEFF MACGILLIVRAY

DRAWN: JM
DESIGNED: JM
CHECKED: RJ
APPROVED: JR

PROJECT: BRADLEY HEIGHT APARTMENTS - BUILDING H
202 27TH AVE SE
PUYALLUP, WA 98374

PRMU20240279

ROBISON ENGINEERING, INC
19401 40TH AVE W. SUITE 302
LYNNWOOD, WA 98036
PHONE:(206)364-3343

DATE: 04/25/2025

SHEET TITLE: SUPPLY RISER DIAGRAMS

SHEET NO. P5H.00

COPYRIGHT 2025, ROBISON ENGINEERING, INC.
JMACGILLIVRAY F:\1219-001 BRADLEY HEIGHT APARTMENTS\DWG\XR_SUPPLY RISERS\P500H.DWG 04-16-2025 15:18

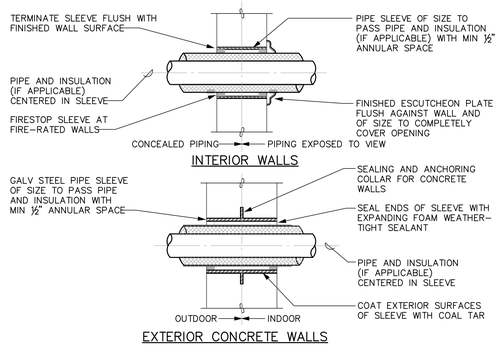

PIPE SLEEVES THROUGH WALLS (8)

SCALE: NONE

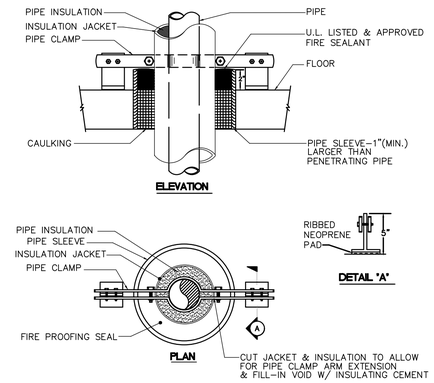

RISER PIPE SUPPORT (7)

SCALE: NONE

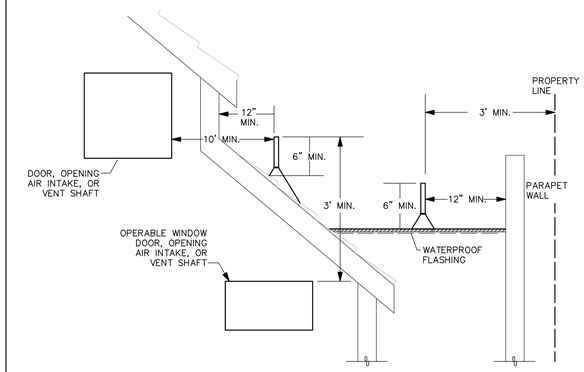

VENT TERMINATION CLEARANCE (6)

SCALE: NONE

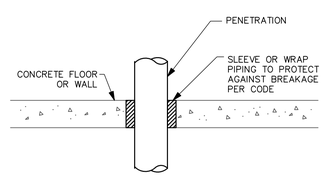

PIPE SLAB PENETRATION (5)

SCALE: NONE

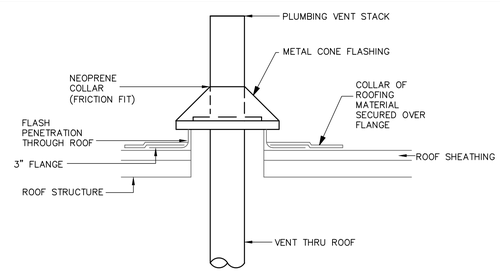

VENT THROUGH ROOF (4)

SCALE: NONE

EQUIPMENT SCHEDULE

WATER METERS (NEXT CENTURY MULTI-JET WATER METER MODEL M201CH, 3/4").

TRANSCEIVER: WIRELESS METERING DATA TRANSCEIVER DUAL INPUT WITH DISPLAY, WITH BATTERIES. TEHAMA WIRELESS MODEL TW-165A-PP.

WIRELESS REPEATERS: TEHAMA COMPATIBLE REPEATERS; QUANTITY TWO. TEHAMA WIRELESS TW-191X.

UDATA CONCENTRATING ACCESS POINT (DCAP): TEHAMA WIRELESS TW-203X-T-150.

- DCAP TO BE INSTALLED ON MAIN COMM/DATA BOARD AND POWER SUPPLY PLUGGED INTO RECEPTACLE.
- PROVIDE ETHERNET OR WIFI ACCESS FOR INTERNET ACCESS TO DCAP.

NOTES:

1. PROVIDE COLD WATER METER AND REMOTE TRANSCEIVER FOR EACH APARTMENT.
2. SECURE METER TO FLOOR/CEILING ASSEMBLY.
3. REFER TO P5 SERIES FOR PIPE SIZES.
4. TRANSITION TO PEX PIPING WITHIN EACH UNIT.

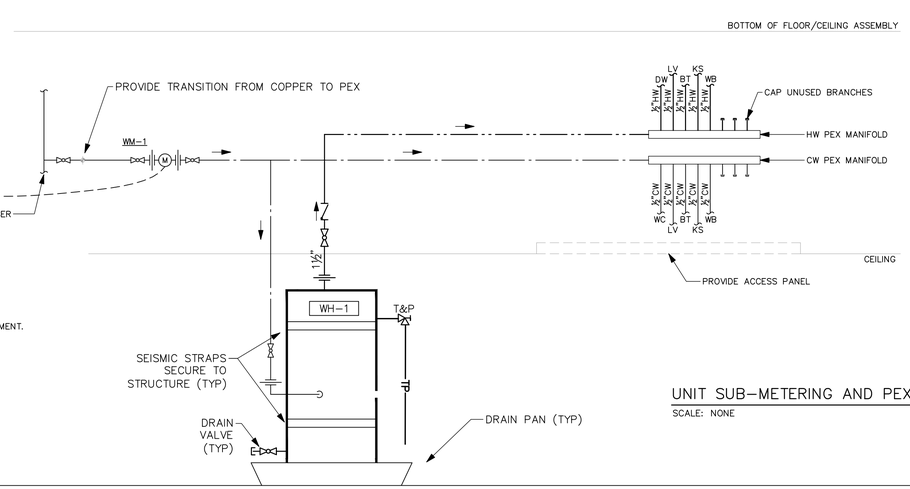

UNIT SUB-METERING AND PEX MANIFOLD (2)

SCALE: NONE

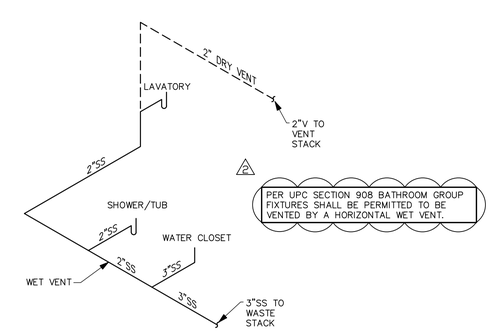

HORIZONTAL WET VENTING (1)

SCALE: NONE

City of Puyallup
Community & Economic Development
Building Planning
Engineering Public Works
Fire Parks

NO.	DATE	DESCRIPTION
		REVISIONS

REED JACKSON
STATE OF WASHINGTON
REGISTERED PROFESSIONAL ENGINEER

ROBISON ENGINEERING, INC
19401 40TH AVE W, SUITE 302
LYNNWOOD, WA 98036
206.364.3343 tel
REI PROJECT NO.: 1219-001
CONTACT: JEFF MacDOUGALL

DRAWN: JM
DESIGNED: JM
CHECKED: RJ
APPROVED: JR

PROJECT: BRADLEY HEIGHT APARTMENTS - BUILDING H
202 27TH AVE SE
PUYALLUP, WA 98374

ROBISON ENGINEERING, INC
19401 40TH AVE W, SUITE 302
LYNNWOOD, WA 98036
PHONE:(206)364-3343

PRMU20240279

DATE: 04/25/2025

SHEET TITLE: **DETAILS**

SHEET NO. P7H.00

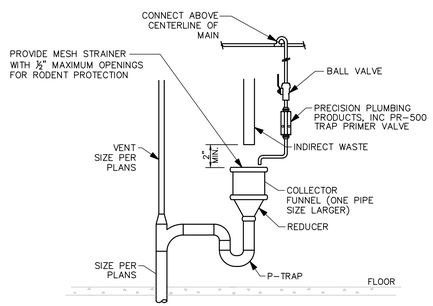

HUB DRAIN
SCALE: NONE
6

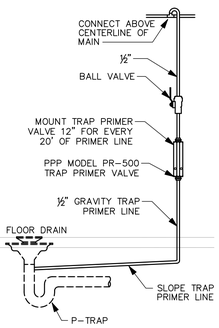

TRAP PRIMER
SCALE: NONE
5

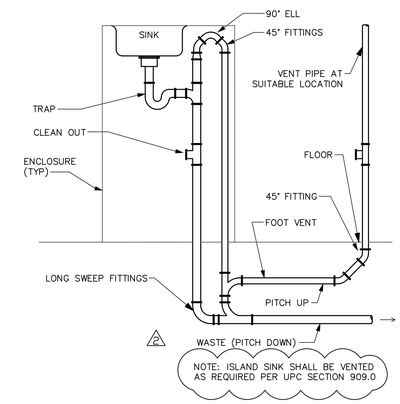

ISLAND SINK INSTALLATION
SCALE: NONE
4

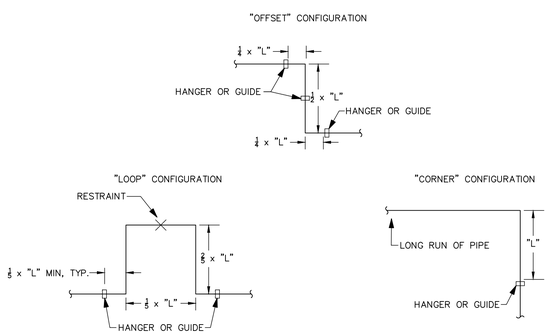

EXPANSION LOOP CONFIGURATIONS
SCALE: NONE
3

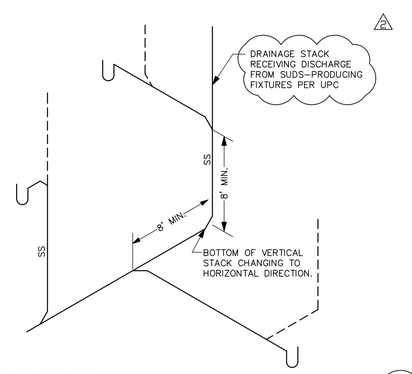

SUDS RELIEF
SCALE: NONE
2

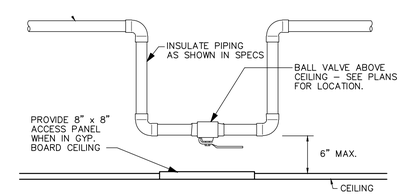

TYPICAL VALVE PLACEMENT
SCALE: NONE
1

NO.	DATE	DESCRIPTION

REVISIONS

REED JACKSON
STATE OF WASHINGTON
REGISTERED PROFESSIONAL ENGINEER

ROBISON ENGINEERING, INC
19401 40TH AVE W, SUITE 302
LYNNWOOD, WA 98036
206.364.3343 TEL
RID PROJECT NO.: 1219-001
CONTACT: JEFF MacGILLIVRAY

DRAWN: JM
DESIGNED: JM
CHECKED: RJ
APPROVED: JR

PROJECT: BRADLEY HEIGHT APARTMENTS - BUILDING H
202 27TH AVE SE
PUYALLUP, WA 98374

PRMU20240279

ROBISON ENGINEERING, INC
19401 40TH AVE W, SUITE 302
LYNNWOOD, WA 98036
PHONE:(206)364-3343

DATE: 04/25/2025

SHEET TITLE:
DETAILS

SHEET NO.
P7H.01