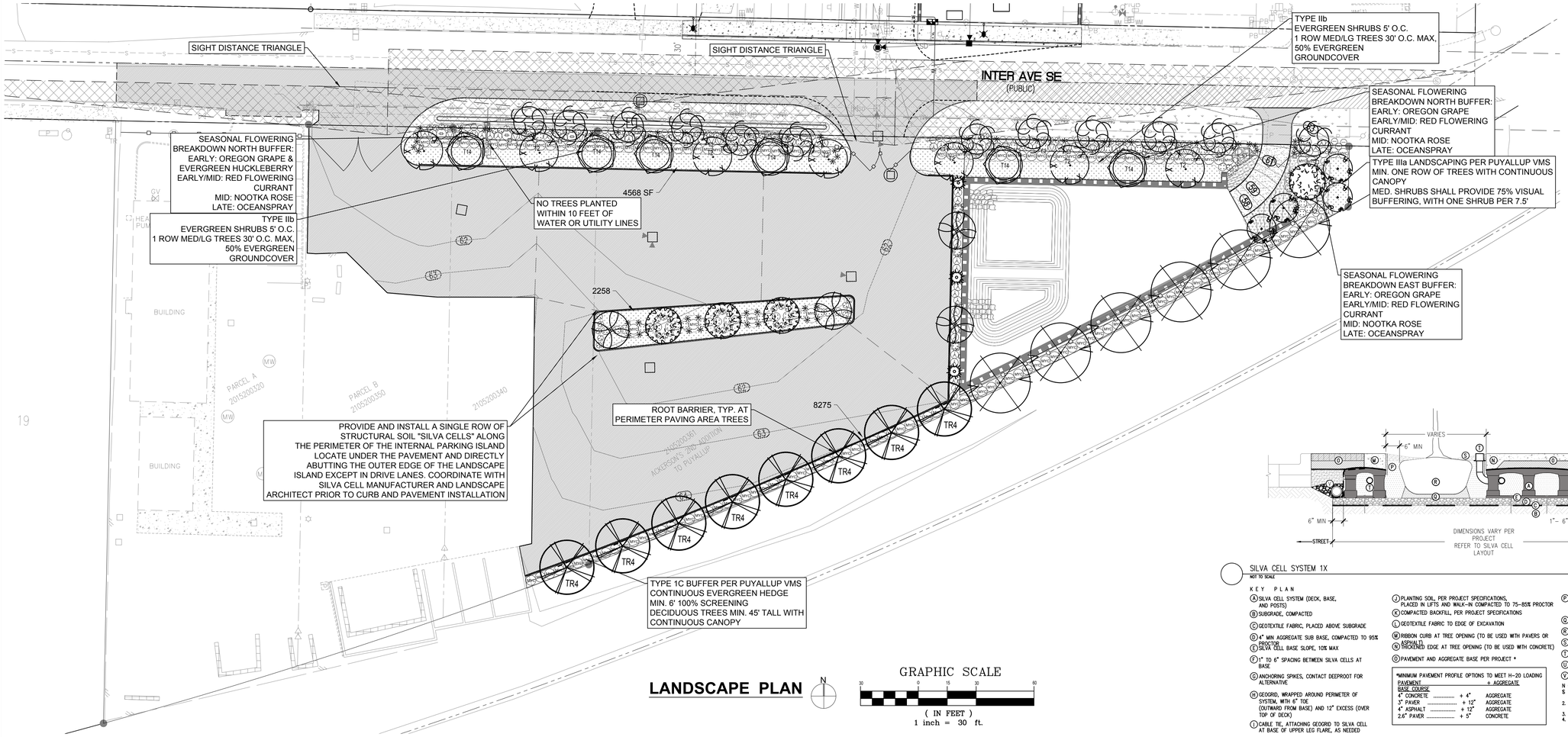

LANDSCAPE PLAN

N

GRAPHIC SCALE

30 0 15 30 60

(IN FEET)
1 inch = 30 ft.

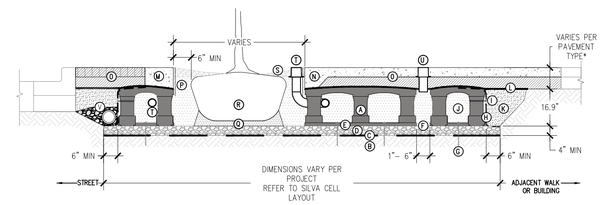

SILVA CELL SYSTEM 1X
NOT TO SCALE

KEY PLAN

- (A) SILVA CELL SYSTEM (DECK, BASE, AND POSTS)
- (B) SUBGRADE, COMPACTED
- (C) GEOTEXTILE FABRIC, PLACED ABOVE SUBGRADE
- (D) 6" MIN AGGREGATE SUB BASE, COMPACTED TO 95% PROCTOR
- (E) SILVA CELL BASE SLOPE, 10% MAX
- (F) 1" TO 6" SPACING BETWEEN SILVA CELLS AT BASE
- (G) ANCHORING SPIKES, CONTACT DEEPROOT FOR ALTERNATIVE
- (H) GEOGRID, WRAPPED AROUND PERIMETER OF SYSTEM, WITH 6" TOE (OUTWARD FROM BASE) AND 12" EXCESS (OVER TOP OF DECK)
- (I) CABLE TIE, ATTACHING GEOGRID TO SILVA CELL AT BASE OF UPPER LEG FLARE, AS NEEDED
- (J) PLANTING SOIL, PER PROJECT SPECIFICATIONS, PLACED IN LIFTS AND WALK-IN COMPACTED TO 75-85% PROCTOR
- (K) COMPACTED BACKFILL, PER PROJECT SPECIFICATIONS
- (L) GEOTEXTILE FABRIC TO EDGE OF EXCAVATION
- (M) RIBBON CURB AT TREE OPENING (TO BE USED WITH PAVERS OR ASPHALT)
- (N) THICKENED EDGE AT TREE OPENING (TO BE USED WITH CONCRETE)
- (O) PAVEMENT AND AGGREGATE BASE PER PROJECT *
- (P) DEEPROOT ROOT BARRIER, 12" OR 18", DEPTH DETERMINED BY THICKNESS OF PAVEMENT SECTION, INSTALL DIRECTLY ADJACENT TO CONCRETE EDGE RESTRAINT
- (Q) PLANTING SOIL BELOW ROOT BALL, COMPACTED WELL TO PREVENT SETTLING
- (R) ROOT BALL
- (S) TREE OPENING TREATMENT, PER PROJECT SPECIFICATIONS
- (T) DEEPROOT WATER AND AIR VENT, ROOTBALL, WHEN REQUIRED
- (U) DEEPROOT WATER AND AIR VENT, WHEN REQUIRED
- (V) UNDERDRAIN SYSTEM, WHEN REQUIRED (LOCATION AND DETAILS BY OTHERS)

*MINIMUM PAVEMENT PROFILE OPTIONS TO MEET H-20 LOADING

PAVEMENT	+ AGGREGATE	
BASE COURSE		
4" CONCRETE	+ 4"	AGGREGATE
3" PAVER	+ 12"	AGGREGATE
4" ASPHALT	+ 12"	AGGREGATE
2.6" PAVER	+ 5"	CONCRETE

NOTES
1. EXCAVATION SHALL BE DONE IN ACCORDANCE WITH ALL APPLICABLE HEALTH AND SAFETY REGULATIONS
2. INSTALLATION TO BE COMPLETED IN ACCORDANCE WITH MANUFACTURER'S SPECIFICATIONS
3. PROVIDE SUPPLEMENTAL IRRIGATION
4. DO NOT SCALE DRAWINGS

PLANT LEGEND

SYMBOL	QTY	DESCRIPTION	SIZE	Native (N), Drought Tolerant (DT)
TREES				
TRP	6	Acer buergerianum Trident Maple	1.5" Cal. Min. Strong Central Leader	DT
	7	Laburnum x Watereri 'Vossii' Goldenchain Tree	1.5" Cal. Min. Strong Central Leader	
	8	Cercis canadensis Eastern Redbud	1.5" Cal. Min. Strong Central Leader	
	4	Rhamnus purshiana Cascara	1.5" Cal. Min. Strong Central Leader	N, DT
	12	Amelanchier grandiflora 'Princess Diana' Princess Diana Serviceberry	1.5" Cal. Min. Strong Central Leader	
	6	Tilia americana 'Boulevard' American Linden	1.5" Cal. Min. Strong Central Leader	DT
	4	Quercus robur x Q. alba 'Crimschmidt' 'Crimson Spire' Oak	1.5" Cal. Min. Strong Central Leader	DT
	4	Gleditsia triacanthos 'Draves' Honeylocust 'Streetkeeper'	1.5" Cal. Min. Strong Central Leader	DT
	3	Chamaecyparis lawsoniana 'Grayswood Pillar' Lawson's Cypress 'Grayswood Pillar'	5'-6' Ht. Full/Compact	DT

NOTES
CALL FOR FINAL INSPECTION - CITY OF PUYALLUP PLANNING DIVISION (253) 864-4165 (OPTION 3)
1. ROOT BARRIERS ARE REQUIRED AROUND STREET TREES IN ACCORDANCE WITH THE CITY STANDARD DETAIL.
2. TOP SOIL SHALL BE INSTALLED IN ACCORDANCE WITH CITY STANDARDS - FIELD VERIFICATION IS REQUIRED. FAILURE TO INSTALL TOP SOIL AND ROOT BARRIERS IN ACCORDANCE WITH CITY STANDARDS MAY RESULT IN REJECTION OF INSTALLATION.
3. CONTRACTOR SHALL SUBMIT DELIVERY RECEIPTS AND DEMONSTRATE COMPLIANCE WITH TOP SOIL REQUIRED AND SPECIFIED ON PLANS AT THE TIME OF FINAL INSPECTION. ESTIMATED TOTAL TOPSOIL (8" depth)15,101 SF REQUIRED TO MEET THE STANDARD IN CUBIC YARDS = 372 CY.

SHRUBS

SYMBOL	QTY	DESCRIPTION	SIZE	
	58	Polystichum munitum Western Sword Fern	2 Gal. Min.	N, DT
MYC	168	Myrica californica Pacific Wax Myrtle	5 Gal. Min.	N, DT
	64	Mahonia aquilifolium 'Orange Flame' Orange Flame Oregon Grape	2 Gal. Min.	DT
	52	Rosa nutkana Nootka Rose	1 Gal. Min.	N, DT
	11	Holodiscus discolor Ocean-spray	2 Gal. Min.	N, DT
	75	Potentilla fruticosa 'Goldfinger' Goldfinger Potentilla	2 Gal. Min.	N, DT
	3	Spiraea douglasii Western Spirea	2 Gal. Min.	N, DT
	37	Vaccinium ovatum Evergreen Huckleberry	2 Gal. Min.	N, DT
	41	Ribes sanguineum Red Flowering Currant	2 Gal. Min.	N, DT
		Arctostaphylos uva-ursi Kinnikinnick	1 Gal. @24"O.C. Triangular Spacing	N, DT
		Fragaria chiloensis Coastal Strawberry	1 Gal. @24"O.C. Triangular Spacing	N, DT

Hydroseed for Typical Lawn Areas — N

SUNMARK NATIVE ECOTURF-
Sunmark Seeds www.sunmarkseeds.com

Botanical Name	Common Name	% by Weight
Festuca rubra	Native Red Fescue	45%
Bouteloua gracilis	Blue Grama	25%
Buchate dactyloides	Buffalograss	20%
Koeleria macrantha	Prairie Junegrass	7%
Trifolium fragiferum	Strawberry Clover	3%

1 lbs per 1,000 SF or 43.67 lbs per acre

Know what's **below.**
Call before you dig.

CITY OF PUYALLUP
Planning Division
Approved Landscape Plan
(253) 864-4165

Staff: RNBrown
Date: 06/05/2025

THIS APPROVAL IS VOID AFTER 180 DAYS FROM APPROVAL DATE. THE CITY IS NOT RESPONSIBLE FOR ERRORS OR OMISSIONS ON THESE PLANS. FIELD CONDITIONS MAY DICTATE CHANGES TO THESE PLANS AS DETERMINED BY THE PLANNING DIRECTOR, DESIGNEE, OR PROJECT PLANNER.

NOTE: If street trees are required, Call Planning Divison for final inspection: (253) 864-4165 (Option 3) Root barriers are required around street trees in accordance with city standard detail. Top soil shall be installed in accordance with city standards - field verification required. Failure to install top soil and root barriers in accordance with the city standards may result in rejection of installation.

Nature By Design
Landscape Architecture
1320 Alameda Avenue, Suite B, Fircrest, WA 98466
www.naturebydesigninc.com
253.460.6067

PROJECT:
PRO VAC SOUTH
XXX INTER AVE
PUYALLUP, WA
OLSON BROS

REVISIONS:

DRAWING ISSUED FOR:
AGENCY
REVIEW

DATE: APRIL 11, 2024

STATE OF WASHINGTON
CATHERINE OWEN
NO. 692 • EXP. APRIL 2026
LICENSED LANDSCAPE ARCHITECT

PROJECT NO:	24055
FILE NAME:	24055LSA
DRAWN BY:	EMK
CHECKED BY:	KLO
X-REFS:	CIVIL
PLOT SCALE:	1:1
DRAWING SCALES:	1:30

DRAWING CONTENTS

LANDSCAPE PLAN

DRAWING NO.:

L1

1 OF 2

ORIG. SHEET SIZE 22X34

GENERAL LANDSCAPE NOTES

1. Contractor is responsible for obtaining all necessary permits from the appropriate agency prior to commencing work. Contractor shall contact Line Locators (811) a min. of 48 hours prior to any digging or trenching. If there are any discrepancies with existing lines and landscaping, it is the contractor's responsibility to contact the landscape architect and request a site visit to address the conflicts. Contractor shall comply and conform to any and all local and state codes for work, schedules and any other project related requirements.

2. Contractor shall coordinate directly with the landscape architect for all landscape related issues, concerns, inspections and approvals. Contractor shall provide the landscape architect with a written request for a site visit to address any related items.

3. Scope of work shall include any and all specified and unspecified but related incidental work to achieve the design indicated on the landscape plans. All labor, materials, subcontractors, equipment, and related incidental items shall be supplied and installed to achieve a complete project, unless directed otherwise by the general contractor or landscape architect.

4. Contractor to verify all sub grades are set below required amendments to insure the finished grade will match what is intended by civil or drainage design. All sub grades and finished or final grades shall be graded to drain to the designed drainage system with positive drainage away from all structures.

5. **Grade Preparation BASED ON VEGETATIVE MANGAGEMENT STANDARDS REQUIREMENTS:**
a. Slopes used for grass plantings or turf shall be less than 3:1 or 33 percent. Otherwise plantings should not require mechanized mowing equipment.

Soil Preparation.

a. Excavate soil - Excavate existing soil to a depth of 24" (or equal to the root ball depth, whichever is greater) and width of 8' (or three times (3X) wider than the root ball or root mass, whichever is greater). Stockpile excavated soil on a tarp away from the street and storm water catch basins.
b. Prepare the planting strip -After excavating all materials from the planter strip, scarify and rip the sub-base (by mechanical means or hand tools) to a depth of 6" with multiple passes, 90 degrees to each Prior to planting the tree, re-compact the tree base where the street tree will be planted to avoid setting of the root ball. At this stage, if the tree is to be planted when the planter strip is backfilled with amended top soil, the contractor/installer should measure the depth of the root bal I to determine when to place the tree in the pit during the backfilling process. If the root ball or root mass (in the case of bare root trees) is less than 24", the street tree shall be planted in a manner in which the root flare is level with or at least 1" above grade at the time of finished planting. This may require the root ball be placed on a compacted sub-base of the compost amended top soil as backfilling is occurring,
c. Install root barrier panels - at this stage the contractor/installer shall place 24" deep root barrier panels (UB-24) along the edge of the sidewalk and curb line for a total of eight feet (8') of lineal protection along either side of the planting area. The panels shall be installed perpendicular to the edge of paved surface in accordance with the manufacturer's standards for a 'linear' application; the root barrier panels shall not be installed in the planting pit as a 'surround' application, unless specified on the final landscape plans. The top of the root barrier panel shall be installed such that½" of the root barrier is above the finished grade.
d. Compost amended top soils required **-** The top soil shall be amended on site during installation with compost to achieve a 40 percent by volume top soil mix in the right-of-way planter strip. Imported top soil may be used by the contractor/installer if data 'cut sheets' are available from the supplier certifying compost amendment equaling 40 percent by volume using one of the approved compost sources below. Compost shall only be sourced from:
Cascade Compost - (also known as PREP/LRI) (available through Pierce County Recycling, Composting & Disposal, 10308 Sales Road, Tacoma, Washington 98499, or retail/wholesale landscape material suppliers)
Tagro Compost Mix - available through City of Tacoma, 2201 Portland Avenue, Gate 6, Tacoma, WA, 98421, or retail/wholesale landscape material suppliers)
Cedar Grove Compost - (available through Cedar Grove Compost, 17825 Cedar Grove Road S.E., Maple Valley, 98038, or retail/wholesale landscape material suppliers)
e. Install and amend top soils - To avoid stratified layers, first place seven inches (7") of approved top soil in the prepared/scarified planting strip area and mechanically till in five inches (5") of approved compost; follow this procedure twice to achieve the total 24" top soil depth. Finished grade of top soil should be 1/2" below the edge of sidewalk to allow the root barrier panel to be properly installed above finished grade.
f. Install tree stakes and finish mulch - Placement of four inches (4") of wood chip mulch, water basin rings, tree staking and temporary irrigation bags (where required) shall follow city standard #01.02.07.\

2. Mulching of Newly Planted or Replanted Areas.
In a planter strip which already exists and a new street tree shall be installed, the following procedures shall be followed to achieve a top soil mix with 40 percent compost by volume

a. Mulches must be applied to the following depths: a minimum 4 (four) inches over bare soil, and two inches where plant materials will cover.
b. Mulches must include organic materials, organic compost mulch material or wood chips over a properly cleaned, amended and graded surface.
c. Nonporous materials, such as plastic sheeting, shall not be used in any area of the landscape because of down-slope erosion and potential soil contamination from herbicide washing.
d. Mulch should be applied regularly to and maintained in all planting areas to assist soils in retaining moisture, reducing weed growth, and minimizing erosion.

7. Contractor shall field layout all plant material and contact the landscape architect for a site visit to approve the layout. Any field modifications shall be done by the landscape architect prior to planting.

8. Contractor shall immediately notify the landscape architect of any poor drainage condition in landscape areas. No standing water shall be permitted in any landscape areas - either on the surface or below the topsoil. The landscape architect shall coordinate the drainage solution with the general contractor and civil engineer. Once the concerns have been remedied planting shall commence.

9. All groundcover to be planted in a triangular spacing formation, equal in all directions to the centers of the groundcovers in distances indicated in the legend. Contractor shall verify all quantities of groundcovers by area calculations and spacing requirements.

10. Landscaping is to be per plan. Plant substitutions due to availability or otherwise will be allowed only with landscape architect, owner and agency approval. Any substitutions will be with material of similar size, growth characteristics, and quality.

11. All trees must be staked as necessary so as to maintain material in a healthy, vigorous growing condition.

12. Landscaping shall be installed in a professional workmanlike manner that is consistent and accepted throughout the industry. All landscape and irrigation work shall be performed by experienced persons familiar with scope of project.

13. All landscape material and labor is to be guaranteed for a period of one full year from the time of completion.

14. When planting 'Balled and Burlapped' product, remove all burlap, string & wire from any B&B plant material, cut and remove jute strings. Gently place in tact Rootbal into planting pit. If rootball breaks or is not solid - the plant is unacceptable and shall be replaced.

15. Street trees shall have caliper size of at least 1" measure per American Association of Nurserymen Standards for Deciduous Trees Plant sizes: 5' Minimum height for Evergreen trees; 2 Gal. Min. for shrubs.

16. Street trees shall be high branching with canopy that starts at least 6' above finish grade.

17. All plant I.D. tags are to remain on the plant material until final inspection has been completed. Once approved all plant I.D. tags shall be removed and discarded appropriately.

18. Trees shall be cared for in accordance with the American National Standards Institute (ANSI) standard practices for trees, shrubs and other woody plant maintenance (ANSI 300) in order to allow them to reach there mature height and form.

19. Pruning of street trees shall be performed per the ANSI 300 standards so as to maintain the natural form of the tree, encourage vigorous growth to a mature spread and height, and avoid weakening the tree to create a hazard. Street trees shall not be topped pollarded, or otherwise pruned in a manner contrary to these goals, unless there is no practicable alternative that would preserve essential utility services.

20. Plant material selected is drought tolerant or native species. The project proponent shall be responsible for maintaining and watering all plant material throughout the first growing season and in times of drought. A Permanent Irrigation system will be designed upon approval of preliminary landscape plan.

21. All landscaping strips and islands internal to the site as paved areas/parking lots shall be designed and installed using a minimum of 1.5 (18) of top soil depth; Subsoils below the topsoil layer shall be scarified at least 6 inches with some incorporation of the upper material to avoid stratified layers.

22. A minimum of eight (8) inches of top soil, containing ten percent dry weight in planting beds, and 5% organic mater content in turf areas, and a pH from 6.0 to 8.0 or matching the pH of the original undisturbed soil. The topsoil layer shall have a minimum depth of eight (8) inches except where tree roots limit the depth of incorporation of amendments needed to meet the criteria. Subsoils below the topsoil layer should be scarified at least six (6) inches with some incorporation of the upper material to avoid the stratified layers, where feasible. Installation of the eight (8) inches of top soil, as described above, shall generally be achieved by placing five (5) (sub-base scarified four (4) inches) with a three (3) inch layer of compost tilled into the entire depth.

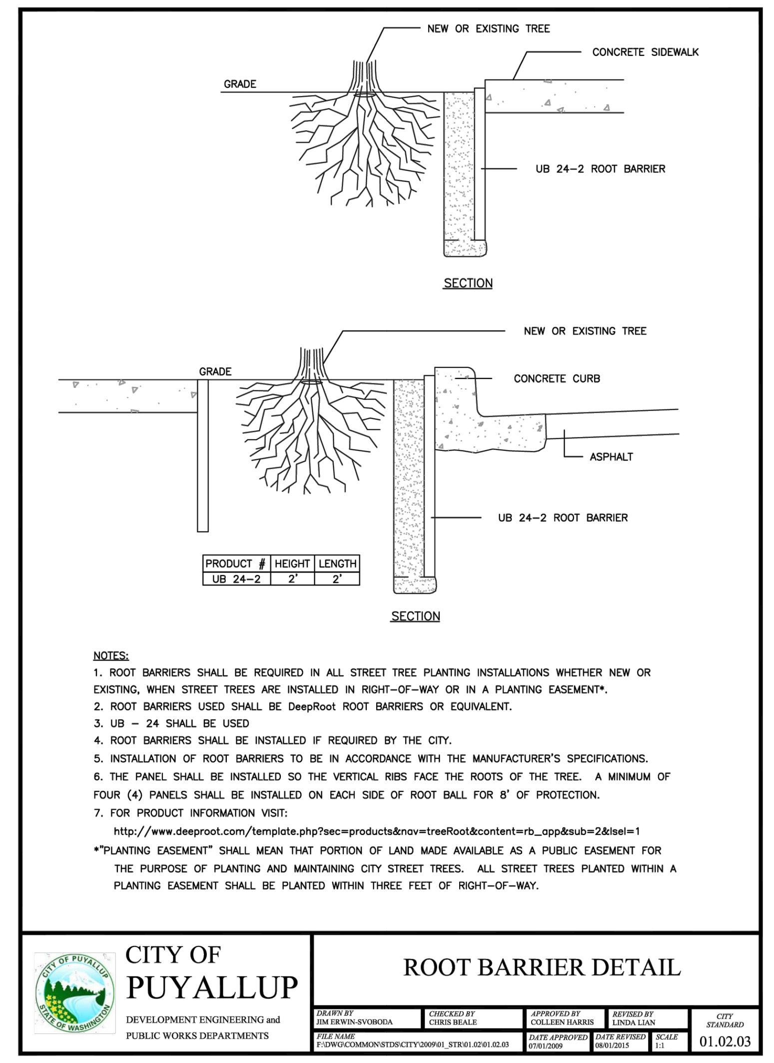

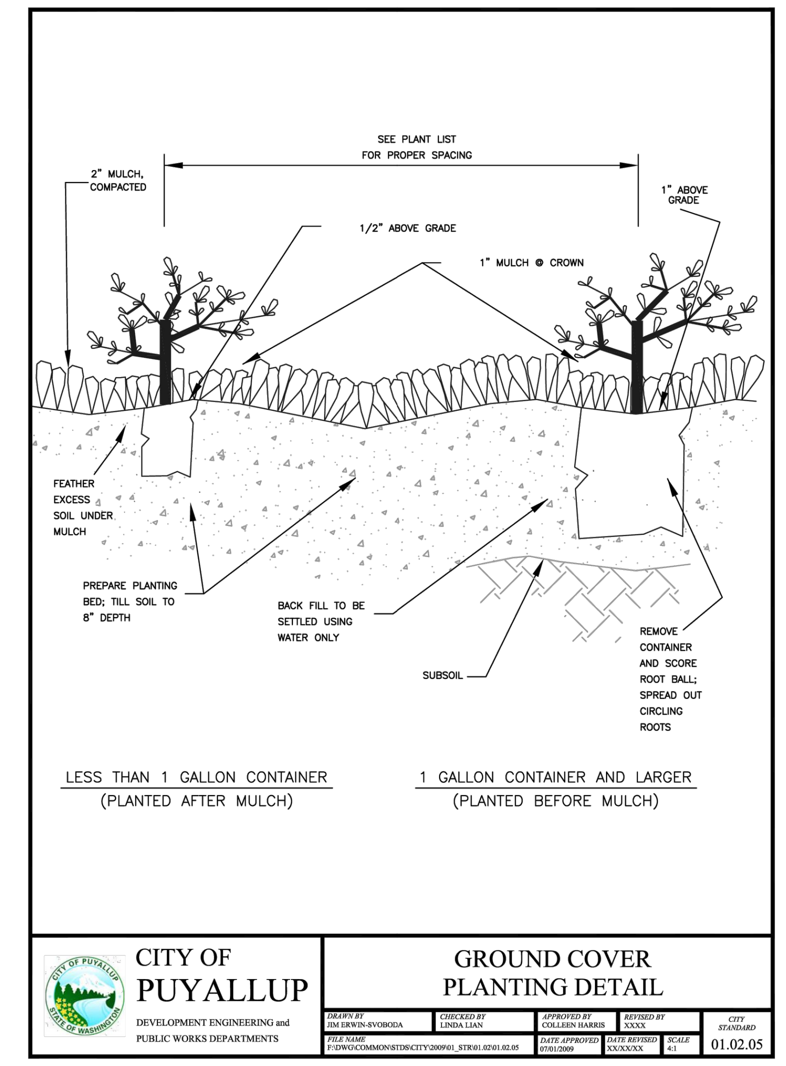

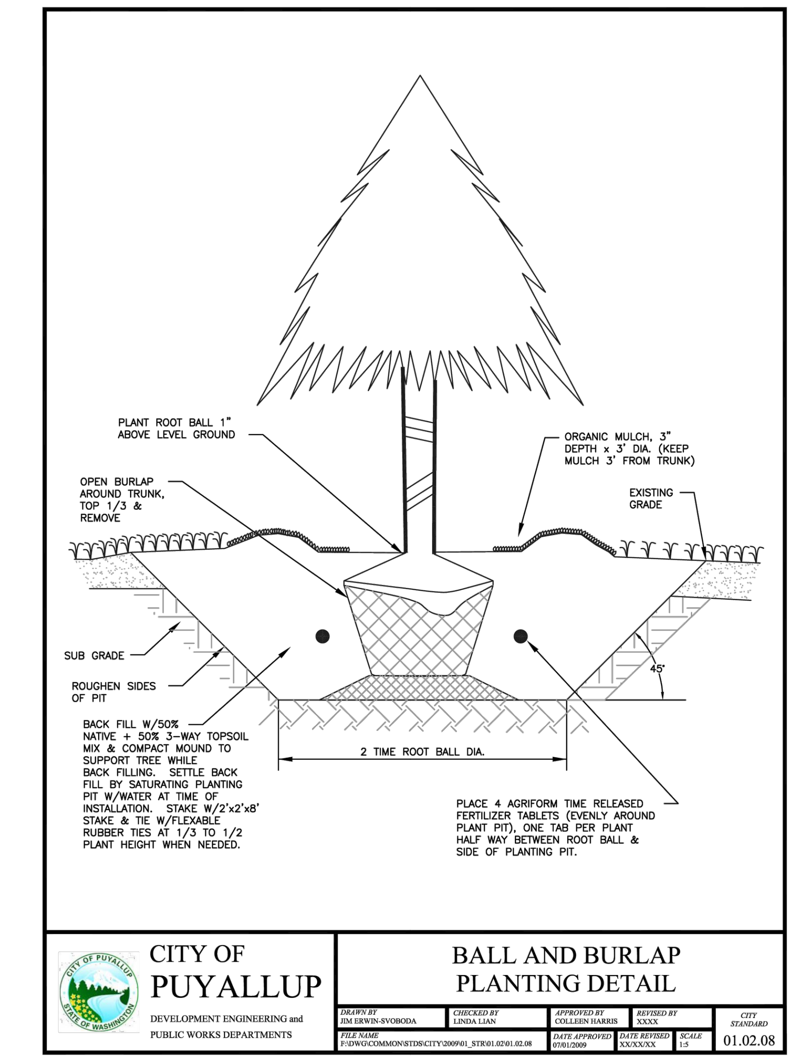

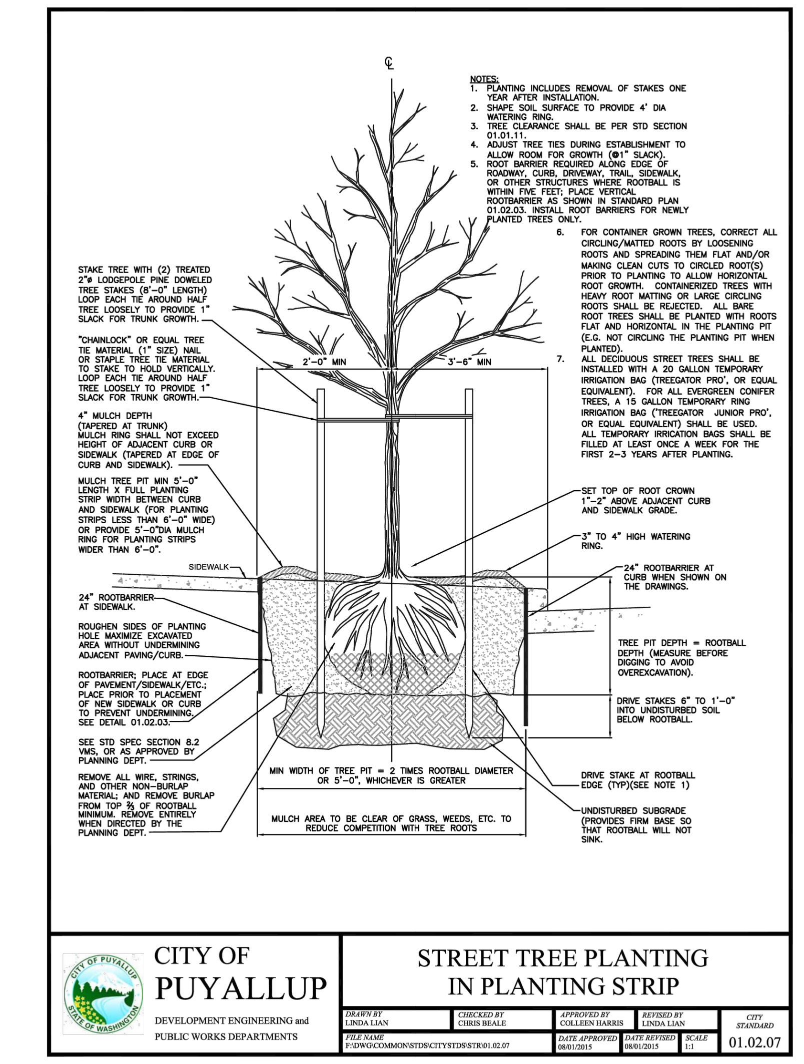

FROM 8.0 OF VEGETATIVE MANAGEMENT STANDARDS (CITY OF PUYALLUP)
A.All work shall be performed and completed in a professional manner. All public rights-of-ways shall. be cleared of all mud and debris at the completion of every work day. All on-site storage and work areas shall be maintained in a safe and hazard free condition.
B.All final landscape plans shall indicate the method of planting and tree staking when applicable. Staking shall only be used where demonstrated to be necessary. Newly planted trees installed in very loose soil or extremely windy locations shall be staked for one full growing season to minimize tree movement. The tree shall be secured to the stakes with a loose attachment that will allow the tree to grow without injury. The stake will placed in such a manner that there will be no limb or bark damage. The stake shall not penetrate the root ball and be place on the lee side of the prevailing winds. All stakes and attachment material will be removed by the contractor or property owner at the completion of the first full growing season.
C.In parking areas, trees and shrubs shall be planted at least two and one-half feet from the inside edge of the curb or wheel stop, where vehicles may overhang planted areas.
Ground cover vegetation should be installed on a regular spaced grid pattern including the over hang area.

8.2 Soil Quantity and Quality Standards
Purpose and Definition
Naturally occurring {undisturbed) soil and vegetation provide important stormwate rfunctions including: water infiltration; nutrient, sediment, and pollutant adsorption; sediment and pollutant biofiltration; water interflow storage and transmission; and pollutant decomposition. These functions are largely lost when development strips away native soil and vegetation and replaces it with minimal topsoil and sod. Not only are these important stormwater functions lost, but such landscapes themselves become pollution-generating pervious surfaces due to increased use of pesticides, fertilizers and other landscaping and household/industrial chemicals, the concentration of pet wastes, and pollutants that accompany roadside litter. Establishing soil quality and depth regains greater stormwater functions in the post development landscape, provides increased treatment of pollutants and sediments that
result from development and habitation, and minimizes the need for some landscaping chemicals, thus reducing pollution through prevention.
All soils in all landscape installations shall conform to the following soil depth and quality requirements. Please refer to appendix 20.9 for further installation guidance:

A. A minimum of eight (8) inches of top soil, containing ten percent dry weight in planting beds, and 5% organic matter content in turf areas, and a pH from 6.0 to 8.0 or matching the pH of the original undisturbed soil. The topsoil layer shall have a minimum depth of eight inches (811) except where tree roots limit the depth of incorporation of amendments needed to meet the criteria. Subsoils below the topsoil layer should be scarified at least 6 inches with some incorporation of the upper material to avoid stratified layers, where feasible.
Installation of the eight inches (8") of top soil, as described above, shall generally be achieved by placing five inches (5") of imported sandy-loam top soil into planned landscape areas {sub-base scarified four inches (4")) with a three inch (311) layer of compost tilled into the entire depth.

B. For street trees in the right of way planter strip, the following standards shall apply in relation to soil depth, soil amendments and installation of new street trees.
The following notes shall be shown on the face of the preliminary and final landscape plan sheets:
•For new construction:·In areas where a new planter strip and street tree shall be established or reconstructed due to a street construction project, the
planter strip area shall be excavated to a depth of 24" and backfilled following the standard above to achieve a top soil mix with 40 percent compost by

The contractor or installer shall:
- Review the city standard planting detail -All contractors/installers are required to following city standard #01.02.07 (street tree planting) and #01.02.03 (root barrier installation). The contractor/installer shall review the planting standard detail prior to installation to understand the city's requirements. Failure to follow the standard may result in rejection of the work by the inspector and/or Planning Department.
- Schedule a field pre-construction meeting-The contractor/installer shall contact the site inspector and Planning Department 48 hours in advance of the installation of street tree(s) for a field pre-construction meeting on-site to review the approved plan set and city standard details. If street trees are to be installed over a longer timeline (such as a residential plat where trees may be installed over a multi-month period oftime), the contractor/installer.shall hold one consolidated pre-con to review plans. All street trees shall be inspected after planting by the Planning Department.
- Excavate all construction materials -Excavate all construction materials, remnant soil, gravel, pit run, construction debris, etc. from the planter strip area to a depth of 24" prior to planting. Discard this material as the placement of new compost amended top soil is required.
- Prepare the planting strip-After excavating all materials from the planter strip, scarify and rip the sub-base with the teeth of a backhoe bucket (or other mechanical means or hand tools) to a depth of 6"with multiple passes, 90 degrees to each other. Prior to planting the tree, re-compact the tree base where the street tree will be planted to avoid setting of the root ball.

At this stage, if the tree is to be planted when the planter strip is backfilled with amended top soil, the contractor/installer should measure the depth of the root ball to determine when to place the tree in the pit during the backfilling process. If the root ball or root mass (in the case of bare root trees) is less than 24", the street tree shall be planted in a manner in which the root flare is level with or at least 1" above grade at the time of finished planting. This may require the root ball be placed on a compacted sub-base of the compost amended top soil as backfilling is occurring,
- Install root barrier panels-At this stage the contractor/installer shall place 24" deep root barrier panels (UB-24) along the edge of the sidewalk and curb line for a total of eight feet (8') of lineal protection along either side of the planting area. The panels shall be installed perpendicular to the edge of paved surface in accordance with the manufacturer's standards for a 'linear' application; the root barrier panels shall not be installed in the planting pit as a 'surround' application, unless specified on the final landscape plans. The top of the root barrier panel shall be installed such that½" of the root barrier is above the finished grade.
- Compost amended top soils required -Top soil source shall be reviewed and approved during the pre-construction meeting; all top soil shall be a top quality sandy-loam mix, or equivalent as approved by the Planning Department. The top soil shall be amended on site during installation with compost to achieve a 40 percent by volume top soil mix in the right-of-way planter strip. Imported top soil may be used by the contractor if data 'cut sheets' are available from the supplier certifying compost amendment equaling 40 percent by volume using one of the approved compost sources below. Compost shall only be sourced from:

- Cascade Compost {also known as PREP/LRI) (available through Pierce County Recycling, Composting & Disposal, 10308 Sales Road, Tacoma, Washington 98499, or retail/wholesale landscape material suppliers}
- TAGRO Compost Mix {available through City of Tacoma, 2201
- Portland Avenue, Gate 6, Tacoma, WA, 98421, or retail/wholesale landscape material suppliers)
- Cedar Grove Compost (available through Cedar Grove Compost, 17825 Cedar Grove Road S.E., Maple Valley, 98038, or retail/wholesale landscape material suppliers)
- Install and amend top soils - To avoid stratified layers, first place seven inches (7") of approved top soil in the prepared/scarified planting strip area and mechanically till in five inches (5") of approved compost; follow this procedure twice to achieve the total 24" top soil depth. Finished grade of top soil should b.e 1/2" below the edge of sidewalk to allow the root barrier panel to be properly installed above finished grade.

Install tree stakes and finish mulch - Placement of four inches (4") of wood chip mulch, water basin rings, tree staking and temporary irrigation bags (where required) shall follow city standard #01.02.07.
- For street trees to be planted in existing right-of-way planter strips: In a planter strip which already exists and a new street tree shall be installed, the following procedures shall be followed to achieve a top soil mix with 40 percent compost by volume:
- Excavate soil -Excavate existing soil to a depth of 24" (or equal to the root ball depth, whichever is greater) and width of 8' (or three times (3X) wider than the root ball or root mass, whichever is greater). Stockpile excavated soil on a tarp away from the street and storm water catch basins.
- Prepare the planting strip -After excavating all materials from the planter strip, scarify and rip the sub-base (by mechanical means or hand tools) to a depth of 6" with multiple passes, 90 degrees to each other. Prior to planting the tree, re-compact the tree base where the street tree will be planted to avoid setting of the root ball.

At this stage, if the tree is to be planted when the planter strip is backfilled with amended top soil, the contractor/installer should measure the depth of the root bal I to determine when to place the tree in the pit during the backfilling process. ·1f the root ball or root mass (in the case of bare root trees) is less than 24", the street tree shall be planted in a manner in which the root flare is level with or at least 1" above grade at the time of finished planting. This may require the root ball be placed on a compacted sub-base of the compost amended top soil as backfilling is occurring,
- Install root barrier panels -At this stage the contractor/installer shall place 24" deep root barrier panels (UB-24) along the edge of the sidewalk and curb line for a total of eight feet (8') of lineal protection along either side of the planting area. The panels shall be installed perpendicular to the edge of paved surface in accordance with the manufacturer's standards for a 'linear' application; the root barrier panels shall not be installed in the planting pit as a 'surround' application, unless specified on the final landscape plans. The top of the root barrier panel shall be installed such that½" of the root barrier is above the finished grade.
- Compost amended top soils required -The top soil shall be amended on site during installation with compost to achieve a 40 percent by volume top soil mix in the right-of-way planter strip. Imported top soil may be used by the contractor/installer if data 'cut sheets' are available from the supplier certifying compost amendment equaling 40 percent by volume using one of the approved compost sources below. Compost shall only be sourced from:

- Cascade Compost (also known as PREP/LRI) (available through Pierce County Recycling, Composting & Disposal, 10308 Sales Road, Tacoma, Washington 98499, or retail/wholesale landscape material suppliers)
- TAGRO Compost Mix (available through City of Tacoma, 2201
- Portland Avenue, Gate 6, Tacoma, WA, 98421, orretail/wholesale landscape material suppliers)
- Cedar Grove Compost (available through Cedar Grove Compost, 17825 Cedar Grove Road S.E., Maple Valley, 98038, or retail/wholesale landscape material suppliers)

Install and amend top soils -To avoid stratified layers, first place seven inches (7") of approved top soil in the prepared/scarified planting strip area and mechanically till in five inches (5") of approved compost; follow this procedure twice to achieve the total 24" top soil depth.

Finished grade of top soil should be 1/2" below the edge of sidewalk to allow the root barrier panel to be properly installed above finished grade.

Install tree stakes and finish mulch -Placement of four inches (4") of wood chip mulch, water basin rings, tree staking and temporary irrigation bags (where required) shall follow city standard #01.02.07.

B.The project landscape architect shall utilize one of the design methods outlined in appendix 20.9 in incorporating this standard. The landscape architect shall estimate total top soil and compost import volumes and specify the top soil and compost source during the final landscape plan review. A top soil delivery ticket(s), invoice(s) or other physical proof that the correct quantity and quality of top soil was delivered shall be provided at the time of final inspection.

8.3 Mulching
In an effort to minimize water use, reduce costs and use of che micals for maintenance, all planting areas shall be mulched with a uniform four (4) inch layer of organic compost mulch material or wood chips over a properly cleaned, amended and graded subsurface. Four inches of mulch in planting areas shall be maintained through the life of the project. Herbicides shall not be used in the mulch ring area for street trees; see city standard #01.02.07 for street tree mulch application and dimensions.

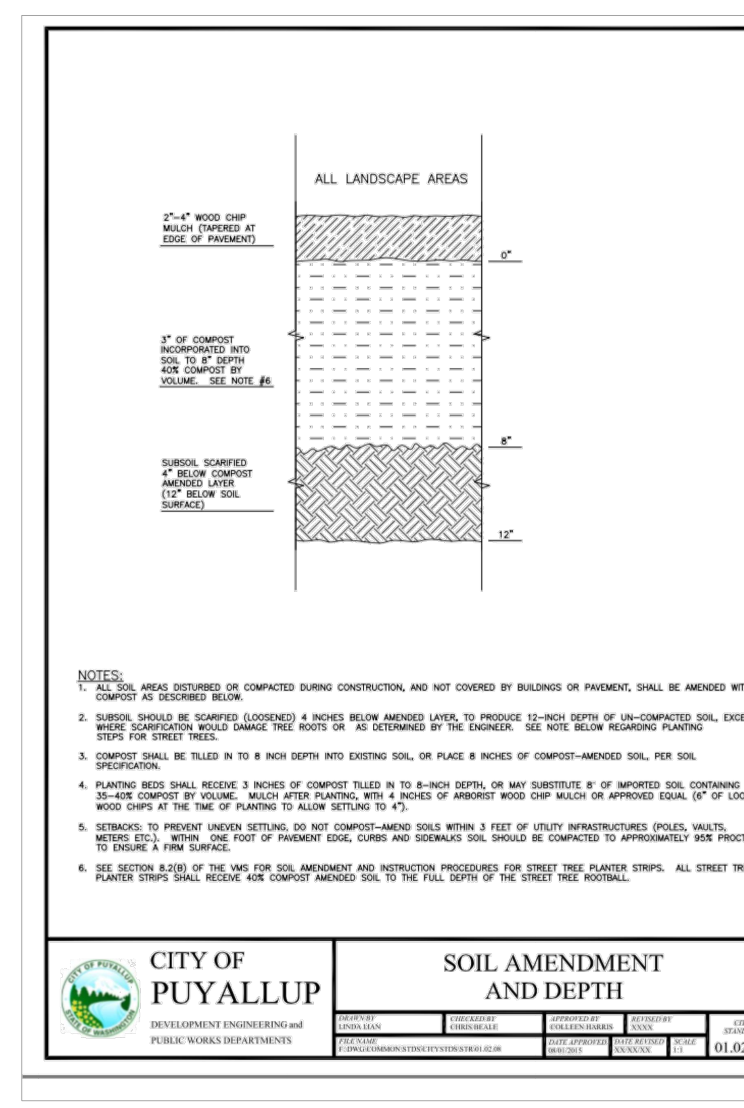

Know what's **below.**
Call before you dig.

CITY OF PUYALLUP
Planning Division
Approved Landscape Plan
(253) 864-4165

Staff: RNBrown

Date: 02/23/2024

THIS APPROVAL IS VOID AFTER 180 DAYS FROM APPROVAL DATE. THE CITY WILL NOT BE RESPONSIBLE FOR ERRORS AND/OR OMISSIONS ON THESE PLANS. FIELD CONDITIONS MAY DICTATE CHANGES TO THESE PLANS AS DETERMINED BY THE PLANNING MANAGER, DESIGNEE, OR PROJECT PLANNER.

NOTE: If street trees are required, Call Planning Division for final inspection: (253) 864-4165 (Option 3) Root Barriers are required around street trees in accordance with city standard detail. Top soil shall be installed in accordance with city standards - field verification required. Failure to install top soil and root barriers in accordance with city standards may result in rejection of installation.

Nature By Design
Landscape Architecture
1320 Alameda Avenue, Suite B, Fircrest, WA 98466
www.naturebydesigninc.com
253.460.6067

PROJECT:
PRO VAC
2511/2515 INTER AVE
PUYALLUP, WA 98372

REVISIONS:

REV B: REVISED PER NEW SITE LAYOUT
REV C: LS, PERMIT 1 & 2
REV E: REVISED PER NEW SITE PLAN LAYOUT
REV F: REVISED PER NEW STRM LAYOUT
REV G: REVISED PER AGENCY COMMENTS REGARDING VEGETATION PLACEMENT AROUND UTILITIES
REV H: ADDED LOT 1 BACK INTO PLAN
I. REVISED PER AGENCY COMMENTS 10/26/2022
J. REVISED WITH NEW SITE PLAN

DRAWING ISSUED FOR:
AGENCY REVIEW
DATE: AUGUST 7, 2023

STATE OF WASHINGTON
KATHERINE OWENS
NO.692 • EXP: APRIL 2023
LICENSED LANDSCAPE ARCHITECT

PROJECT NO.:	2057
FILE NAME:	2057LSJ
X-REFS:	
DRAWN BY:	KLO
CHECKED BY:	KLO
PLOT SCALE:	1:1
DRAWING SCALES:	NO SCALE

DRAWING CONTENTS
LANDSCAPE NOTES & DETAILS

DRAWING NO.:
L2

2 OF 2

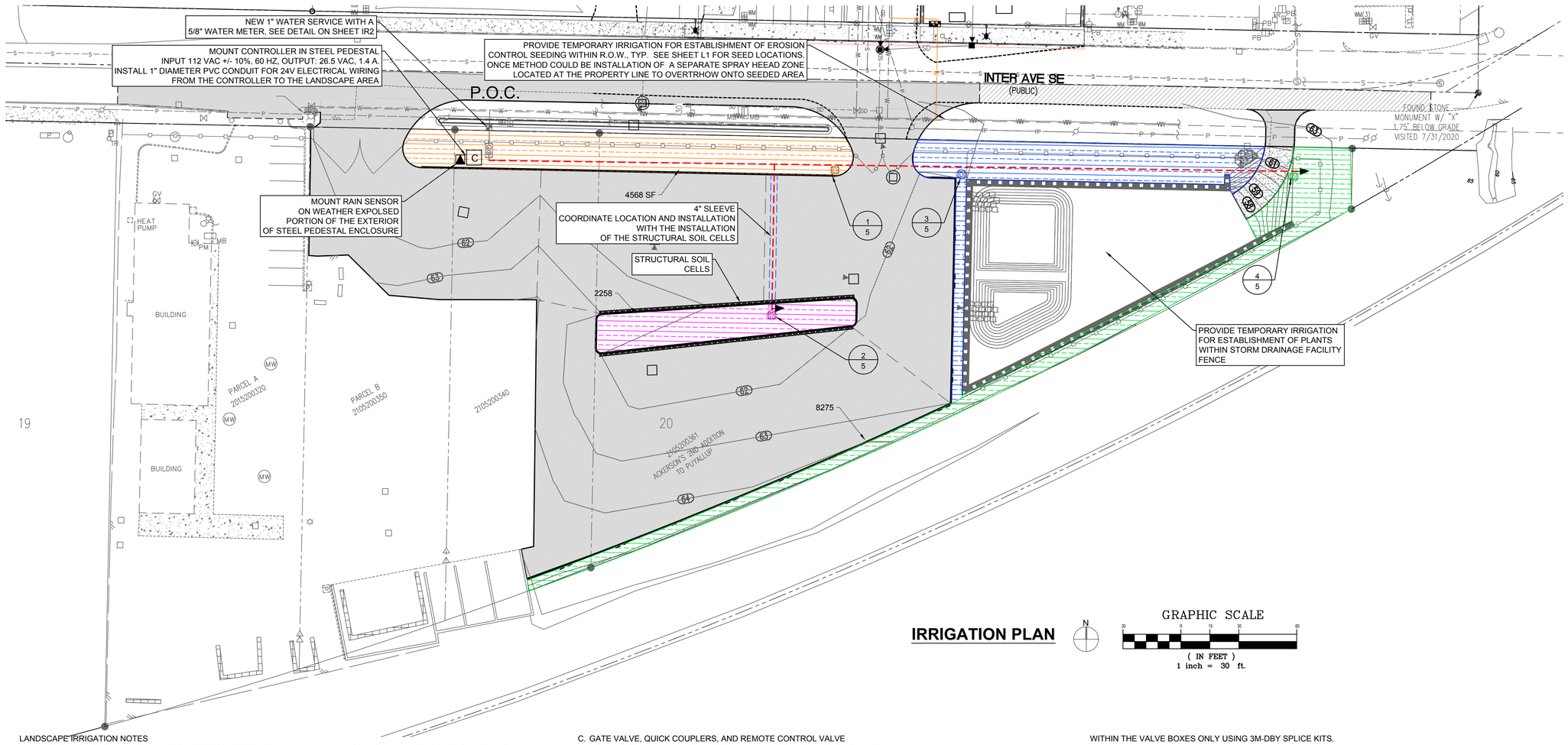

IRRIGATION PLAN

GRAPHIC SCALE

(IN FEET)
1 inch = 30 ft.

LANDSCAPE IRRIGATION NOTES

1. IRRIGATION SYSTEM ENGINEERING BASED ON A 1.00" WATER METER WITH A STATIC WATER PRESSURE OF 60.0 LBS. THE INSTALLER TO VERIFY ADEQUATE STATIC WATER PRESSURE AT TIME OF INSTALLATION.

2. INSTALL ALL EQUIPMENT PER STATE AND LOCAL CODES. CALL LINE LOCATERS PRIOR TO DIGGING AT 1-800-424-5555. THE INSTALLER SHALL BE RESPONSIBLE FOR ALL PERMITS, TESTS AND INSPECTIONS AS REQUIRED.

3. SEE CIVIL DRAWINGS TO VERIFY ALL UTILITY LOCATIONS.

4. GENERAL CONTRACTOR AND LANDSCAPE CONTRACTOR TO COORDINATE:
   A. INSTALLATION OF 110V ELECTRICAL SERVICE FROM ELECTRICAL SOURCE TO AUTOMATIC CONTROLLER, INCLUDING WIRE HOOK-UP INTO MOUNTED CONTROLLER. IRRIGATION CONTRACTOR WILL MOUNT CONTROLLER PER DESIGN AND COORDINATE WITH THE GENERAL CONTRACTOR.
   B. INSTALLATION OF IRRIGATION / SERVICE METER AND STUB TO IRRIGATION POINT OF CONNECTION, PER UTILITY PLANS. PROVIDE STANDARD THREADED STUB -OUT WITH THREADED CAP ON DISCHARGE SIDE OF METER. STUB-OUT TO BE INSTALLED APPROXIMATELY 18 INCHES BELOW FINISH GRADE.
   C. VERIFICATION OF STATIC WATER PRESSURE AT POINT OF CONNECTION (P.O.C.) CONTRACTOR SHALL NOTIFY OWNER AND LANDSCAPE ARCHITECT OF ANY VARIATION IN STATIC PRESSURE OVER 5 PSI GREATER / LESS THAN DESIGN PRESSURE.

5. PROVIDE ALL LABOR, MATERIALS, TRANSPORTATION AND SERVICES NECESSARY TO FURNISH AND INSTALL A COMPLETE IRRIGATION SYSTEM AS INDICATED ON THE PLANS. PROVIDE A ONE (1) YEAR WARRANTY / GUARANTEE FROM FINAL ACCEPTANCE AGAINST ALL DEFECTS IN MATERIAL, EQUIPMENT, AND WORKMANSHIP.

6. COORDINATE IRRIGATION INSTALLATION WITH GENERAL CONTRACTOR, ELECTRICAL CONTRACTOR, LANDSCAPE CONTRACTOR, OWNER, ARCHITECT, AND LANDSCAPE ARCHITECT.

7. LANDSCAPE CONTRACTOR TO TEST AVAILABLE WATER PRESSURE PRIOR TO BEGINNING ANY WORK. PROVIDE WRITTEN TEST RESULTS TO LANDSCAPE ARCHITECT.

8. ALL WORK PER LOCAL CODE. INSTALLATION PER MANUFACTURER'S WRITTEN SPECIFICATIONS.

9. CONTRACTOR TO OBTAIN AND PAY FOR ALL PERMITS, FEES AND REQUIRED CITY INSPECTIONS.

10. SUBMITTALS - SUBMIT TO LANDSCAPE ARCHITECT FOR REVIEW AND APPROVAL:
   A. PRODUCT DATA: FOR EACH TYPE OF PRODUCT INDICATED ON PLANS.
   B. CONTROL WIRING DIAGRAM
   C. AS-BUILT DRAWINGS
   D. OPERATION AND MAINTENANCE MANUALS AND KEYS TO OWNER

11. PROVIDE AND KEEP UP TO DATE A COMPLETE 'AS-BUILT' RECORD SET OF PRINTS WHICH ARE TO BE CORRECTED DAILY AND SHOW EVERY CHANGE FROM THE ORIGINAL DRAWINGS AND NOTES AND AXACT 'AS-BUILT' LOCATIONS, SIZES AND KIND OF EQUIPMENT. THIS SET OF DRAWINGS ARE TO BE KEPT ON SITE AND ARE TO BE USED ONLY AS THE RECORD SET. ALL WORK IS TO BE NEAT AND LEGIBLE ANNOTATIONS THEREON DAILY AS THE WORK PROCEEDS, SHOWING WORK AS ACTUALLY INSTALLED.
DIMENSION FROM TWO (2) PERMANENT POINTS OF REFERENCE (IE BUILDING CORNERS, WALKS OR ROAD INTERSECTIONS, ETC) THE LOCATION OF THE FOLLOWING:
   A. CONNECTION TO WATER LINES (P.O.C)
   B. CONNECTIONS TO ELECTRICAL POWER
   C. GATE VALVE, QUICK COUPLERS, AND REMOTE CONTROL VALVE
   D. ROUTING OF MAINLINE (DIMENSION A MAXIMUM OF 100' ALONG ROUTING)
   E. ROUTING OF CONTROL WIRING
   F. OTHER RELATED EQUIPMENT AS DIRECTED BY THE LANDSCAPE ARCHITECT.

12. PREPARE AND PROVIDE PRIOR TO COMPLETION OF CONSTRUCTION, A THREE RING BINDER CONTAINING THE FOLLOWING INFORMATION:
   A. INDEX SHEET STATING THE CONTRACTOR'S NAME, ADDRESS, TELEPHONE NUMBER,E-MAIL AND A LIST OF EQUIPMENT WITH THE NAME AND ADDRESS OF LOCAL MANUFACTURER'S REPRESENTATIVES.
   B. CATALOG AND PARTS SHEETS ON EVERY MATERIAL AND EQUIPMENT INSTALLED UNDER THIS CONTRACT.
   C. GUARANTEE STATEMENT
   D. COMPLETE OPERATING AND MAINTENANCE INSTRUCTIONS ON ALL MAJOR EQUIPMENT.
   E. CONSTRUCTION DETAILS FROM THE PROJECT.
   F. COMPLETE TROUBLE-SHOOTING GUIDE TO COMMON IRRIGATION PROBLEMS
   G. WINTERIZATION AND SPRING START UP PROCEDURES
   H. CHART OF APPROXIMATE WATERING TIMES FOR SPRING, SUMMER AND FALL
   I. A COPY OF THE 'AS-BUILT' DRAWINGS AND CONTROLLER CHART PER ZONE W/ WATERING TIMES

13. ALL VALVES TO BE PLACED IN 'CARSON' GRADE LEVEL BOXES WITH BOLT -LOCK LIDS (OR APPROVED EQUIVALENT). SET BOXES 2 INCHES HIGHER THAN FINISH GRADE IN MULCH AREAS AND FLUSH WITH FINISH GRADE IN LAWN AREAS. JUMB BOX FOR CHECK VALVE, 10" ROUND BOX FOR GATE / QUICK COUPLER / WIRE SPLICES, AND 12" STANDARD FOR CONTROL VALVES. PROVIDE BOX EXTENSIONS AS REQUIRED.

14. MAINLINE PIPE TO BE BURIED 18 INCHES, LATERALS - 12 INCHES, AND SLEEVES - 24 INCHES BELOW FINISH GRADE. NO ROCKS OR DEBRIS TO BE BACKFILLED IN PIPE TRENCHES.

15. INSTALL MANUAL DRAINS AT ALL LOW POINTS AND RECORD ALL LOCATIONS ON THE "RECORD DRAWINGS".

16. HEAD AND LINE POSITIONING IS DIAGRAMMATIC ON PLAN, ADJUST IN FIELD AS NECESSARY FOR 100 PERCENT COVERAGE. VALVES TO BE POSITIONED ADJACENT TO PAVEMENT / CURBS IN SHRUB BEDS WHERE POSSIBLE. IRRIGATION LINES ARE THAT ARE SHOWN WITHIN HARD SURFACE AREAS FOR CLARITY, SHALL BE LOCATED WITHIN LANDSCAPE PLANTING AREAS OR UNDERGROUND SLEEVES.

17. ADJUST RADIUS ON ALL SPRINKLER HEADS TO MAXIMIZE THE COVERAGE AND MINIMIZE OVERSPRAY ON ALL HARD SURFACES. ADD ANTI-DRAIN CHECK VALVES TO LOW HEADS TO ELIMINATE DRAINAGE AND RUN-OFF.

18. FAMILIARIZE OWNERS FACILITY OPERATOR WITH IRRIGATION SYSTEM FUNCTION, CONTROLLER PROGRAMMING, SYSTEM OPERATION AND MAINTENANCE REQUIREMENTS.

19. SPRINKLERS ON RISERS WILL NOT BE ALLOWED UNLESS NOTED ON PLANS.

20. FROM THE CONTROLLER INSTALL (2) TWO SPARE YELLOW WIRES TO EACH VALVE NO. 1 AND 3.

21. DO NOT SPICE THE RED SIGNAL WIRE BETWEEN THE CONTROLLER AND THE CONTROL VALVE. WIRE SPLICES SHALL BE WITHIN THE VALVE BOXES ONLY USING 3M-DBY SPLICE KITS.

22. ALL ELECTRICAL EQUIPMENT TO BE UL TESTED AND APPROVED, AND BEAR THE U.L. LABEL.

23. CROSS CONNECTION INSPECTION REQUIRED. THE BACKFLOW DEVICE TO BE TESTED UPON THE ORIGINAL INSTALLATION. THE TESTING TO BE PERFORMED BY A PERSON HOLDING A CURRENT CERTIFICATE AS A BACKFLOW TESTER. THE TEST REPORT TO BE SUBMITTED TO THE LOCAL WATER DISTRICT, OR PURVEYOR, AND OWNER WITH A COPY TO LANDSCAPE ARCHITECT. CONTRACTOR TO INCLUDE TESTING IN THE SCOPE OF WORK. OWNER IS RESPONSIBLE FOR ANNUAL INSPECTIONS AFTER THE INITIAL INSPECTION.

24. CONTRCATOR TO PROVIDE WINTERIZATION AND SPRING START UP SERVICE WHEN INSTALLATION HAS BEEN COMPLETED WITHIN 90 DAYS OF NOVEMBER 1 FOR WINTERIZATION OR MAY 15 FOR SPRING SERVICE. SERVICE TO BE PERFORMED AS NEAR AS PRACTICAL TO THE ABOVE DATES, OR AS FREEZE / PRECIPITATION CONDITIONS DETERMINE SERVICE NEED.

25. IRRIGATION SCHEDULING:
THE IRRIGATION SYSTEM CONTROLLER CONTAINS A WATER BUDGET FEATURE. PERIODIC (WEEKLY) ADJUSTMENT OF THE WATER SCHEDULE IS INTENDED TO BE MADE VIA BUDGET ADJUSTMENT. RE-ADJUST WATERING DAYS AT 100% BUDGET WHEN ADJUSTMENT EXCEEDS 30%. SET CONTROLLER FOR HIGHEST ETo WATER SCHEDULE, BASED ON PUBLISHED LOCAL EVAPOTRANSPIRATION DATA. SYSTEM HAS BEEN DESIGNED FOR 50-80% DISTRIBUTION UNIFORMITY. LAWN ZONES SHOULD BE SCHEDULED FOR 100% REPLACEMENT FACTOR ON A TYPICAL MINIMUM 3-DAY CYCLE. SHRUB ZONES SHOULD BE PROGRAMMED AT 40-70% OF THE MONTHLY LAWN WATER REQUIRMENT ON A ONCE PER WEEK CYCLE. ALL WATERING IN EXCESS OF THE LOCAL ETo (FIELD RECHARGE) TO BE COMPLETED DURING THE CONSTRUCTION PHASE WHILE THE CONTRACTOR IS ON THE JOB SITE. OVER WATERING OF LANDSCAPE DUE TO CONTROLLER SCHEDULING TO BE GROUNDS FOR CONTRACTOR TO REPAIR ANY RESULTANT DAMAGES AT CONTRACTOR'S EXPENSE.

26. SUBSTITUTION OF IRRIGATION MATERIAL / EQUIPMENT TO BE MADE ONLY UPON WRITTEN APPROVAL OF OWNER'S REPRESENTATIVE.

27. CLEAN UP AND PROTECTION: DURING IRRIGATION WORK, KEEP ALL PAVEMENT CLEAN AND WORK AREAS IN AN ORDERLY CONDITION. PROTECT IRRIGATION WORK AND MATERIALS FROM DAMAGE DUE TO LANDSCAPE AND IRRIAGATION OPERATIONS AND TRESPASSERS. MAINTAIN PROTECTION DURING INSTALLATION AND MAINTENANCE PERIOD. TREAT, REPAIR, OR REPLACE DAMAGE LANDSCAPE AND IRRIGATION AS DIRECTED BY OWNER.

28. PRIOR TO BACKFILLING IRRIGATION TRENCHES, LANDSCAPE CONTRACTOR SHALL CONDUCT A WATER PRESSURE AND COVERAGE TEST IN THE PRESENCE OF THE LANDSCAPE ARCHITECT. LANDSCAPE CONTRACTOR TO GIVE 3 (THREE) WORKING DAYS NOTICE PRIOR TO TEST. THE MAIN LINE IS TO BE PRESSURE TESTED FOR (1) ONE HOUR WITH '0' LOSS. THE COMPLETED TEST IS TO BE TURNED OVER TO THE GENERAL CONTRACTOR.

29. ALL CONTROL VALVES SHALL BE TAGGED USING PLASTIC MARKING NUMBERS. NUMBER VALVES AS PER PLAN.

30. CONTRACTOR SHALL COORDINATE WITH GENERAL CONTRACTOR AND LANDSCAPE ARCHITECT WITH A PRE-CONSTRUCTION MEETING AND A FULL UNDERSTANDING OF THE SEQUENCE OF THE INSTALLATION OF THE IRRIGATION SYSTEM. IF THERE ARE PHASES OR COO'S TO BE ACCOMPLISHED IN A PHASED MATTER - COORDINATE THE MAINLINE LOCATION AND PHASES TO BE INSTALLED TO PREVENT BREAKAGE OR DOWN TIME DUE TO CONSTRUCTION SEQUENCING. INSTALL ISOLATION VALVES OR STUBS FOR EXTENDING SYSTEM WHEN NECESSARY. A UNIT PRICE FOR UNFORESEEN STUBS OR ISOLATION VALVES SHALL BE PROVIDED TO OWNER IN CONTRACT.

811 Know what's below. Call before you dig.

CITY OF PUYALLUP
Planning Division
Approved Landscape Plan
(253) 864-4165

Staff: RNBrown

Date: 02/23/2024

THIS APPROVAL IS VOID AFTER 180 DAYS FROM APPROVAL DATE. THE CITY WILL NOT BE RESPONSIBLE FOR ERRORS AND/OR OMISSIONS ON THESE PLANS. FIELD CONDITIONS MAY DICTATE CHANGES TO THESE PLANS AS DETERMINED BY THE PLANNING MANAGER, DESIGNEE, OR PROJECT PLANNER.
NOTE: If street trees are required, Call Planning Division for final inspection: (253) 864-4165 (Option 3) Root Barriers are required around street trees in accordance with city standard detail. Top soil shall be installed in accordance with city standards - field verification required. Failure to install top soil and root barriers in accordance with city standards may result in rejection of installation.

Nature By Design
Landscape Architecture
1320 Alameda Avenue, Suite B, Fircrest, WA 98466
www.naturebydesigninc.com
253.460.6067

PROJECT:
PRO VAC SOUTH
XXX INTER AVE
PUYALLUP, WA
OLSON BROS

REVISIONS:

DRAWING ISSUED FOR:
AGENCY REVIEW

DATE: APRIL 11, 2024

STATE OF WASHINGTON · KATHERINE OWEN · NO. 692 · EXP. APRIL 2025 · LICENSED LANDSCAPE ARCHITECT

PROJECT NO:	24055
FILE NAME:	24055LSA
DRAWN BY:	EMK
CHECKED BY:	KLO
X-REFS:	CIVIL
PLOT SCALE:	1:1
DRAWING SCALES:	1:30

DRAWING CONTENTS

IRRIGATION PLAN

DRAWING NO.:

IR1

1 OF 3

ORIG. SHEET SIZE 22X34

EQUIPMENT LEGEND

CATALOG NUMBER	SYMBOL	DESCRIPTION	PSI	EMITTER SPACING	GPH
1800 SAM PRS 15 SST		RAINBIRD XFS-CV-06-9 SUB SURFACE DRIPLINE COMPONENTS TO BE USED WITH RAINBIRD XF DRIPLINE INSERT FITTINGS OR TWIST LOCK FITTINGS XFS-CV SUB SURFACE DRIP IRRIGATION FOR PLANTING AREAS WITH GROUNDCOVER, SHRUBS AND TREES. ABOVE NOTED DRIPLINE IS DESIGNED WITH .60 GPH EMITTERS SPACED AT 12 INCHES APART AND A ROW SPACING OF 18 INCHES NOTE: XFS-CV HAS A CHECK VALVE INTEGRATED	20	12"	.60
	NO SYMBOL	RAINBIRD 'OPERIND' DRIP SYSTEM OPERATOR / PRESSURE INDICATED TAKES, PROVIDED FOR EACH ZONE			
	NO SYMBOL	RAINBIRD SOIL STAPLES, MAX. EVERY 5 LINEAR FEET			
	NO SYMBOL	DRIPLINE FLUSH VALVE: 1 PER IRRIGATION ZONE. LOCATE AT LOWEST ELEVATION WITHIN EACH ZONE, INSTALL IN 10 INCH VALVE BOX			
	D	DRIP IRRIGATION: HUNTER ICV SERIES ELECTRIC REMOTE CONTROL VALVE. MAX 2 VALVES PER VALVE BOX			
250 BG 150 HAM		HAMMOND BRASS GATE VALVE WITH WHEEL HANDLE			
950 XLT- 1 $\frac{1}{2}$"		WILKINS FEBCO DOUBLE CHECK ASSEMBLY (STATE APPROVED)			
NP 44QCV 1.00"		RAIN BIRD QUICK COUPLING VALVE WITH MATCHING KEY			
75 SV RS 0.75"		LAWN LIFE MANUAL DRAIN VALVE WITH RISING SWIVEL			
ICC SERIES	C	HUNTER AUTO CONTROLLER I-CORE IRRIGATION CONTROLLER. COORDINATE LINE VOLTAGE LINE INTO STEEL PEDESTAL (OR APPROVED SIMILAR)			
MINI CLICK		HUNTER AUTO RAIN SENSOR			
226BCDB 17"X30"X18"	NONE	NDS BACKFLOW BOW WITH BOLT DOWN LID			
214 BC 14"X19"X12"	NONE	NDS CONTROL VALVE BOX WITH LID			
312 BC 10"X10"	NONE	NDS ISOLATION AND MANUAL DRAIN VALVE BOX WITH LID			
SCH 40		SOLVENT WELD PVC MAIN LINE, SIZE AS SHOWN			
CL 200		SOLVENT WELD PVC LATERALS, SIZE AS SHOWN			
SCH 40		SOLVENT WELD PVC SLEEVING, SIZE AS SHOWN			
14 1 UF	NONE	DIRECT BURY CONTROL WIRING, USE WHITE FOR THE COMMON, RED AS SIGNAL, AND YELLOW FOR THE SPARES.			

IRRIGATION EQUIPMENT SHOWN DIAGRAMATICALLY FOR PLAN CLARITY. COMMON TRENCH AND PLACE EQUIPMENT IN LANDSCAPE; MANIFOLD GROUPED VALVES IN ADJACENT SHRUB AREAS WHERE FEASIBLE.

SCH 40 PIPE SIZING CHART

PIPE SIZE	3/4	1	1 1/4	1 1/2	2	2 1/2	
FLOW GPM	1-8	8.1-13	13.1-23	23.1-32	32.1-53	53.1-74	GPM (MAX.)

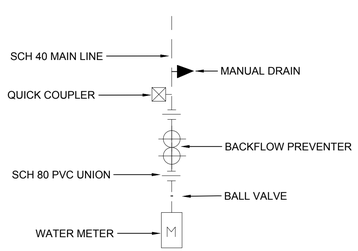

E POINT OF CONNECTION
N.T.S.

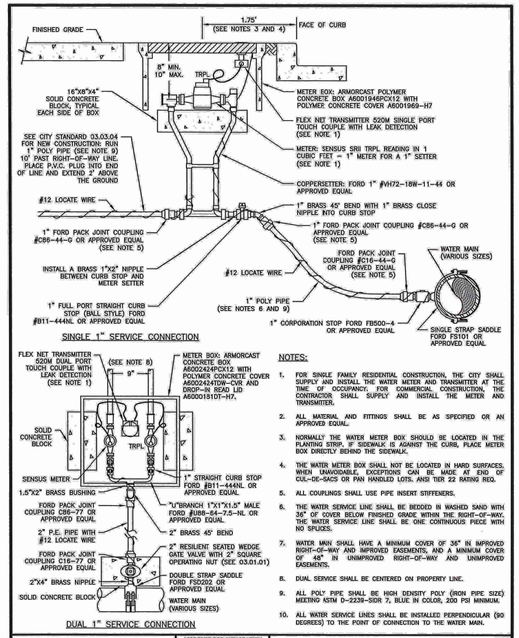

SINGLE 1" SERVICE CONNECTION

DUAL 1" SERVICE CONNECTION

NOTES:

1. FOR SINGLE FAMILY RESIDENTIAL CONSTRUCTION, THE CITY SHALL SUPPLY AND INSTALL THE WATER METER AND TRANSMITTER AT THE TIME OF OCCUPANCY. FOR COMMERCIAL CONSTRUCTION, THE CONTRACTOR SHALL SUPPLY AND INSTALL THE METER AND TRANSMITTER.
2. ALL MATERIAL AND FITTINGS SHALL BE AS SPECIFIED OR AN APPROVED EQUAL.
3. NORMALLY THE WATER METER BOX SHOULD BE LOCATED IN THE PLANTING STRIP. IF SIDEWALK IS AGAINST THE CURB, PLACE METER BOX DIRECTLY BEHIND THE SIDEWALK.
4. THE WATER METER BOX SHALL NOT BE LOCATED IN HARD SURFACES. WHEN UNAVOIDABLE, EXCEPTIONS CAN BE MADE AT END OF CUL-DE-SACS OR PAH HANDLED LOTS. ARB TIER 22 RATING REQ.
5. ALL COUPLINGS SHALL USE PIPE INSERT STIFFENERS.
6. THE WATER SERVICE LINE SHALL BE BEDDED IN WASHED SAND WITH 36" OF COVER BELOW FINISHED GRADE WITHIN THE RIGHT-OF-WAY. THE WATER SERVICE LINE SHALL BE ONE CONTINUOUS PIECE WITH NO SPLICES.
7. WATER MAIN SHALL HAVE A MINIMUM COVER OF 36" IN IMPROVED RIGHT-OF-WAY AND IMPROVED EASEMENTS, AND A MINIMUM COVER OF 48" IN UNIMPROVED RIGHT-OF-WAY AND UNIMPROVED EASEMENTS.
8. DUAL SERVICE SHALL BE CENTERED ON PROPERTY LINE.
9. ALL POLY PIPE SHALL BE HIGH DENSITY POLY (IRON PIPE SIZE) MEETING ASTM D-2239-SIDR 7, BLUE IN COLOR, 200 PSI MINIMUM.
10. ALL WATER SERVICE LINES SHALL BE INSTALLED PERPENDICULAR (90 DEGREES) TO THE POINT OF CONNECTION TO THE WATER MAIN.

CITY OF PUYALLUP
PUBLIC WORKS AND DEVELOPMENT ENGINEERING

APPROVED FOR PUBLICATION
7/6/23

1"
WATER SERVICE CONNECTION

(NOT TO SCALE)
CITY STANDARD 03.03.01-2

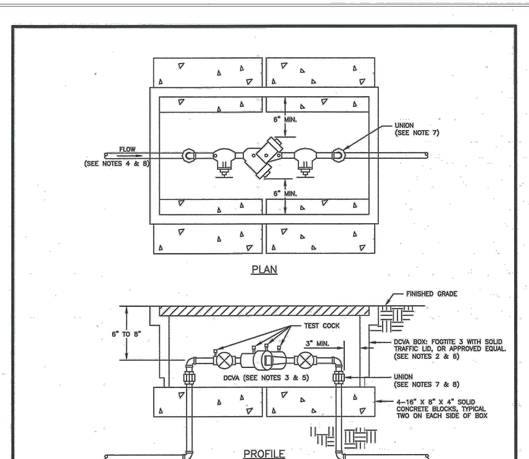

NOTES:

1. BACKFLOW ASSEMBLY MUST BE SELECTED FROM WASHINGTON STATE DEPARTMENT OF HEALTH'S LIST OF BACKFLOW PREVENTION ASSEMBLIES APPROVED FOR INSTALLATION IN WASHINGTON STATE, LATEST EDITION.
2. THE DCVA SHALL BE INSTALLED WITH ADEQUATE SPACE TO FACILITATE MAINTENANCE AND TESTING. IT SHALL BE TESTED AFTER INSTALLATION, BY A WASHINGTON STATE CERTIFIED BACK-FLOW ASSEMBLY TESTER, TO INSURE ITS SATISFACTORY OPERATION BEFORE OCCUPANCY, AND ANNUALLY THEREAFTER. SEND TEST RESULTS TO: CITY OF PUYALLUP, WATER QUALITY OPERATIONS, 1100 39TH AVE SE, PUYALLUP, WA 98374.
3. DCVA MUST BE PURCHASED AS A UNIT. NO MODIFICATIONS TO THE ASSEMBLY ARE ALLOWED.
4. DCVA SHALL BE PLACED IMMEDIATELY DOWNSTREAM OF WATER METER. WHEN IRRIGATION SYSTEM IS CONNECTED OFF DOMESTIC WATER LINE, IRRIGATION DCVA SHALL BE PLACED IMMEDIATELY DOWNSTREAM OF THE BRANCH CONNECTION.
5. DCVA SHALL BE SIZED EQUAL OR COMPARABLE TO METER SIZE.
6. METER BOX SHALL BE LARGE ENOUGH TO ALLOW THE MINIMUM SETBACKS ILLUSTRATED ABOVE. METER BOX LID SHALL BE A TRAFFIC LID WITH A H-20 LOADING.
7. DIELECTRIC UNIONS MUST BE USED TO SEPARATE DISSIMILAR MATERIALS.
8. USE ONLY BRASS OR COPPER BETWEEN THE METER AND THE UNION ON THE CUSTOMER'S SIDE OF THE DCVA.

CITY OF PUYALLUP
OFFICE of THE CITY ENGINEER

APPROVED FOR PUBLICATION
DATE REVISED: 2/5/2019

2" AND SMALLER DOUBLE CHECK VALVE ASSEMBLY INSTALLATION

(NOT TO SCALE)
CITY STANDARD 03.04.01

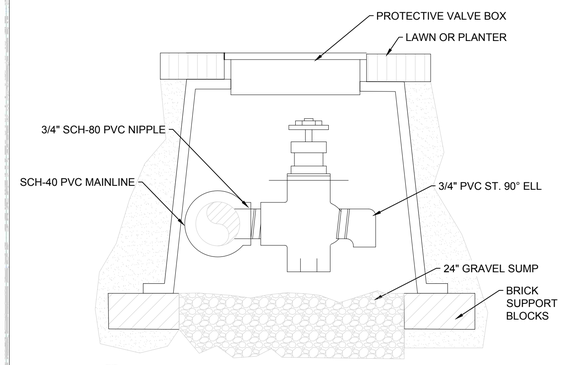

A MANUAL ASSEMBLY DRAIN
N.T.S.

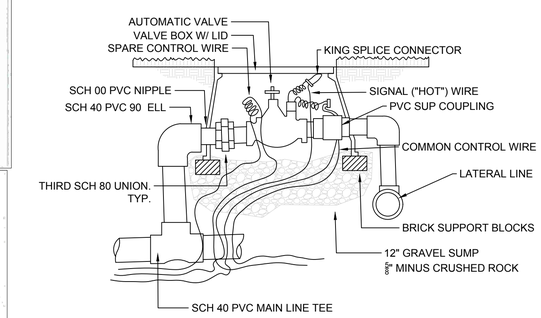

B AUTO CONTROL VALVE
N.T.S.

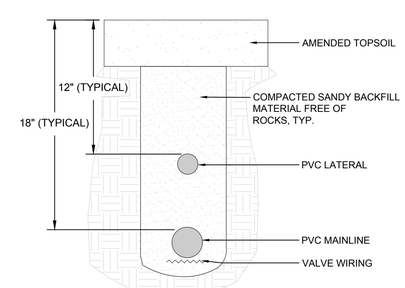

C PIPING & WIRING
N.T.S.

Know what's **below.**
Call before you dig.

CITY OF PUYALLUP
Planning Division
Approved Landscape Plan
(253) 864-4165

Staff: RNBrown

Date: 02/23/2024

THIS APPROVAL IS VOID AFTER 180 DAYS FROM APPROVAL DATE. THE CITY WILL NOT BE RESPONSIBLE FOR ERRORS AND/OR OMISSIONS ON THESE PLANS. FIELD CONDITIONS MAY DICTATE CHANGES TO THESE PLANS AS DETERMINED BY THE PLANNING MANAGER, DESIGNEE, OR PROJECT PLANNER.

NOTE: If street trees are required, Call Planning Division for final inspection: (253) 864-4165 (Option 3) Root Barriers are required around street trees in accordance with city standard detail. Top soil shall be installed in accordance with city standards - field verification required. Failure to install top soil and root barriers in accordance with city standards may result in rejection of installation.

Nature By Design
Landscape Architecture
1320 Alameda Avenue, Suite B, Fircrest, WA 98466
www.naturebydesigninc.com
253.460.6067

PROJECT:
PRO VAC SOUTH
XXX INTER AVE
PUYALLUP, WA
OLSON BROS

REVISIONS:

DRAWING ISSUED FOR:
AGENCY REVIEW

DATE: APRIL 11, 2024

STATE OF WASHINGTON
KATHERINE OWEN
NO. 492 • EXP. APRIL 2024
LICENSED LANDSCAPE ARCHITECT

PROJECT NO:	24055
FILE NAME:	24055LSA
DRAWN BY:	EMK
CHECKED BY:	KLO
X-REFS:	CIVIL
PLOT SCALE:	1:1
DRAWING SCALES:	N.T.S.

DRAWING CONTENTS

IRRIGATION DETAILS

DRAWING NO.:

IR2

2 OF 3

ORIG. SHEET SIZE 22X34

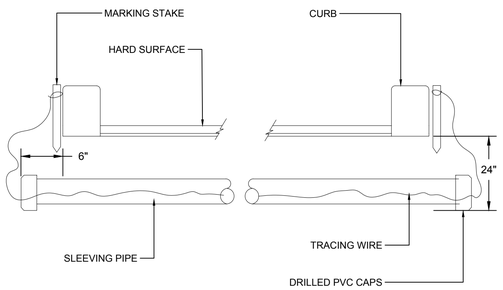

D SLEEVING DETAIL

N.T.S.

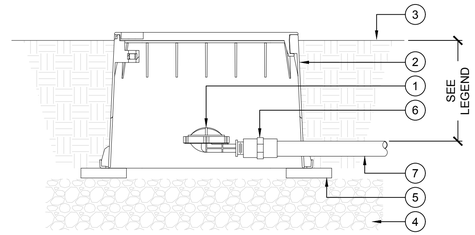

DETAIL LEGEND:

1. HUNTER AUTOMATIC FLUSH VALVE WITH 5/8" [17 mm] BARB CONNECTION, MODEL AFV-T.
2. HUNTER RECTANGULAR PLASTIC VALVE BOX AND LID (MB-0811). LID COLORS: STANDARD BLACK, PURPLE FOR RECYCLED WATER USE, AND OTHER COLORS AVAILABLE, SEE HUNTER CATALOG.
3. FINISHED GRADE
4. GRAVEL BASE, DEPTH AS SPECIFIED
5. COMMON HALF BRICK, 2 TOTAL, INSTALL ONE ON EACH SHORT SIDE OF BOX.
6. FEMALE ADAPTER PER PLAN, SLIP X FPT
7. LATERAL LINE PER PLAN

G EMITTER ZONE AUTO FLUSH VALVE

N.T.S.

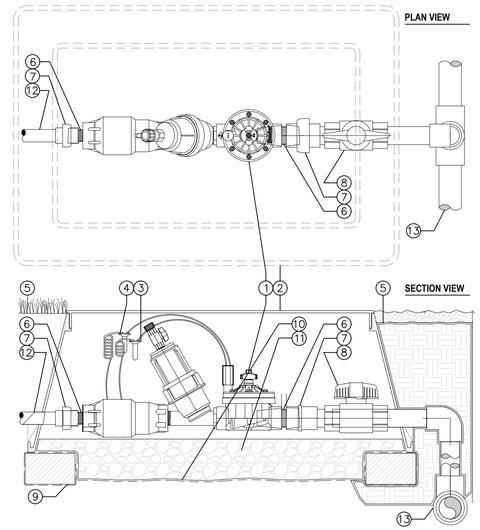

LEGEND

1. HUNTER REMOTE CONTROL VALVE (ICZ) WITH FILTER REGULATOR
2. IRRIGATION VALVE BOX: HEAT STAMP LID WITH "RCV" IN 2" LETTERS
3. WATERPROOF CONNECTORS (2)
4. 18"–24" COILED WIRE TO CONTROLLER
5. FINISH GRADE AT ADJACENT SURFACE (TURF OR MULCH)
6. SCH. 80 CLOSE NIPPLE, MATCH SIZE TO VALVE
7. PVC ADAPTOR SLIP X FPT
8. ISOLATION VALVE, SIZE AND TYPE PER PLAN
9. BRICK SUPPORTS (4)
10. FILTER FABRIC – WRAP TWICE AROUND BRICK SUPPORTS
11. 3/4" WASHED GRAVEL – 4" MIN. DEPTH
12. IRRIGATION LATERAL
13. MAINLINE LATERAL AND FITTINGS

J DRIP CONTROL ZONE KIT (ICZ-151) WITH ISOLATION VALVE

NOT TO SCALE

LEGEND

1. POP-UP BODY (06), NOZZLE AND CAP PER PLAN
2. FINISHED GRADE
3. ADJACENT LANDSCAPE
4. LATERAL PIPE PER PLAN
5. LATERAL FITTING PER PLAN
6. FIELD-BUILT FLEXIBLE SWING ARM

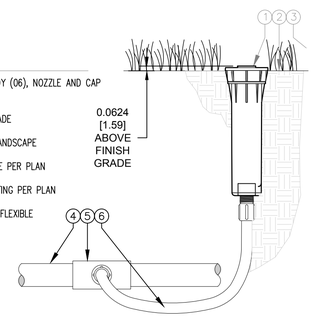

E SPRAY HEAD DETAIL

N.T.S.

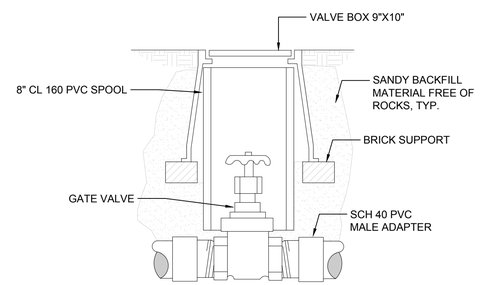

H ISOLATION VALVE

N.T.S.

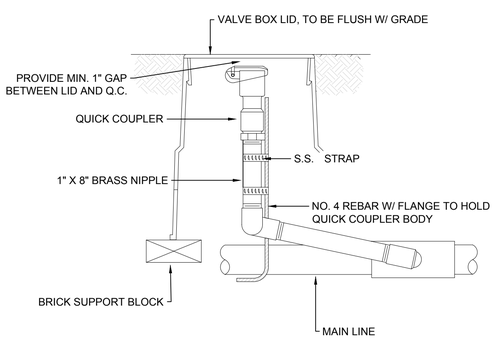

F QUICK COUPLER VALVE

N.T.S.

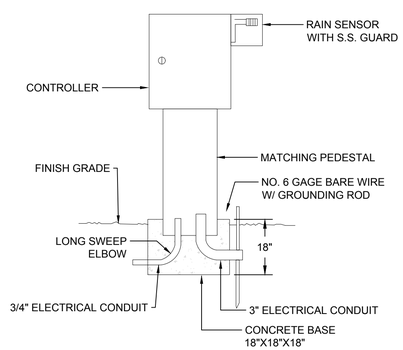

I CONTROLLER ENCLOSURE

N.T.S.

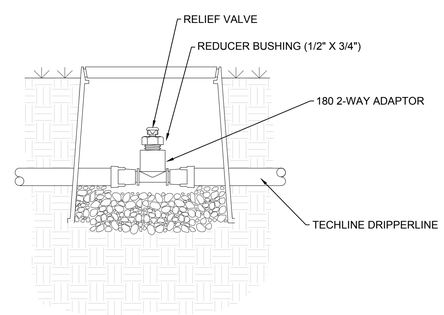

K AIR RELIEF VALVE

N.T.S.

Know what's **below.**
Call before you dig.

CITY OF PUYALLUP
Planning Division
Approved Landscape Plan
(253) 864-4165

Staff: RNBrown

Date: 02/23/2024

THIS APPROVAL IS VOID AFTER 180 DAYS FROM APPROVAL DATE. THE CITY WILL NOT BE RESPONSIBLE FOR ERRORS AND/OR OMISSIONS ON THESE PLANS. FIELD CONDITIONS MAY DICTATE CHANGES TO THESE PLANS AS DETERMINED BY THE PLANNING MANAGER, DESIGNEE, OR PROJECT PLANNER.

NOTE: If street trees are required, Call Planning Division for final inspection: (253) 864-4165 (Option 3) Root Barriers are required around street trees in accordance with city standard detail. Top soil shall be installed in accordance with city standards - field verification required. Failure to install top soil and root barriers in accordance with city standards may result in rejection of installation.

Nature By Design
Landscape Architecture
1320 Alameda Avenue, Suite B, Fircrest, WA 98466
www.naturebydesigninc.com
253.460.6067

PROJECT:
PRO VAC SOUTH
XXX INTER AVE
PUYALLUP, WA
OLSON BROS

REVISIONS:

DRAWING ISSUED FOR:
AGENCY REVIEW

DATE: APRIL 11, 2024

STATE OF WASHINGTON
KATHERINE OWENS
NO. 692 • EXP. APRIL 30th
LICENSED LANDSCAPE ARCHITECT

PROJECT NO:	24055
FILE NAME:	24055LSA
DRAWN BY:	EMK
CHECKED BY:	KLO
X-REFS:	CIVIL
PLOT SCALE:	1:1
DRAWING SCALES:	N.T.S.

DRAWING CONTENTS

IRRIGATION DETAILS

DRAWING NO.:

IR3

ORIG. SHEET SIZE 22X34