STEWART TITLE
PLAZA 512 BUILDING
TENANT IMPROVEMENT

507 31ST AVE SW
PUYALLUP, WA 98373
PERMIT SET

Reviewed for Compliance
Approved for Construction
By Janelle Montgomery ✔
B-21-0583
Date of Review 9/20/2021

INTERIORS

HELIX DESIGN GROUP, INC.
6021 12th STREET EAST SUITE 201
TACOMA, WASHINGTON 98424
CONTACT: DIANE BARRINGER
PHONE: (253) 922-9037
EMAIL: DIANEB@HELIXDESIGNGROUP.NET

TENANT

STEWART TITLE
1360 POST OAK BLVD, SUITE 100
MC #1-1
HOUSTON, TX 77056
CONTACT: STEVE LINDSTROM
PHONE: (713) 985-1899
EMAIL: SLINDSTROM@STEWART.COM

AREA MAP

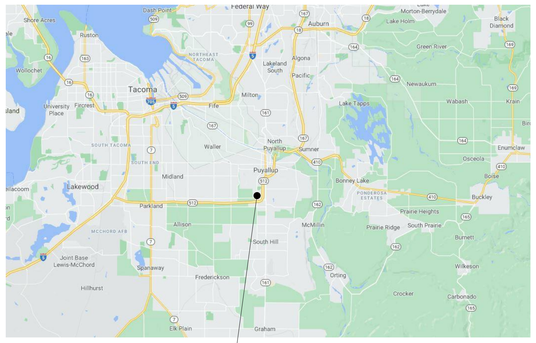

NORTH

PROJECT LOCATION

N.T.S.

SITE PLAN

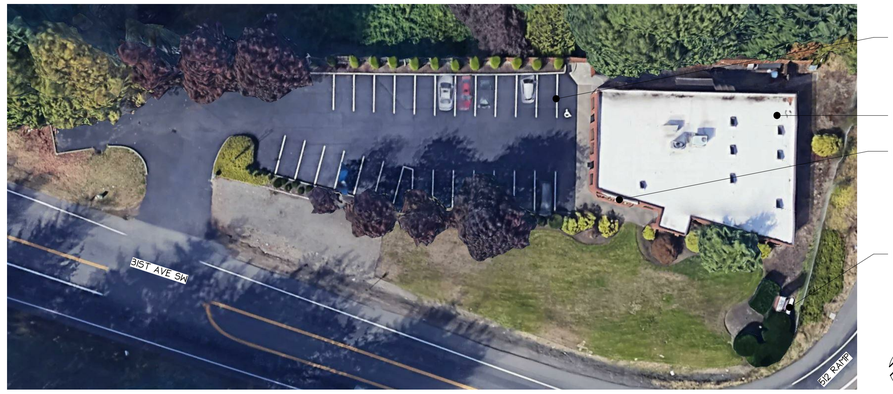

NORTH N.T.S.

PROJECT INFORMATION

BUILDING AREA
FIRST FLOOR 4,330 SQ FT

PROJECT DESCRIPTION
TENANT IMPROVEMENT TO COMBINE TWO SUITES IN AN EXISTING SINGLE STORY BUILDING INTO ONE HOME LENDING BUSINESS OFFICE.

SHEET INDEX

GENERAL DRAWINGS

G001	COVER SHEET
G040	COLORS AND MATERIALS SCHEDULE, STANDARD ABBREVIATIONS, CODE PLAN

ARCHITECTURAL DRAWINGS

A100	FLOOR PLAN
A120	REFLECTED CEILING PLAN, ENLARGED PLAN
A200	SCHEDULES, ENLARGED PLAN
A600	STANDARD CASEWORK AND FIXTURES
A601	INTERIOR ELEVATIONS
A750	INTERIOR METAL FRAMING DETAILS
A751	INTERIOR METAL FRAMING DETAILS
A752	INTERIOR METAL FRAMING DETAILS

DEMOLITION DRAWINGS

D100	DEMOLITION PLAN

MECHANICAL DRAWINGS

M1	MECHANICAL PLAN

PLUMBING DRAWINGS

P-1	PLUMBING PLAN

SYMBOLS

GRID LINE DESIGNATION
C.O.S. = center of structure
F.O.S. = face of structure
(E) = existing

INTERIOR ELEVATION
ELEVATION NUMBER
SHEET NUMBER

EXTERIOR ELEVATION
ELEVATION NUMBER
SHEET NUMBER

BUILDING SECTION
SECTION NUMBER
SHEET NUMBER

WALL SECTION
SECTION LETTER
SHEET NUMBER

DETAIL
DETAIL NUMBER
SHEET NUMBER

REVISION
REVISION

MATCHLINE

NORTH ARROW

GENERAL NOTES

1. ALL WORK SHALL CONFORM TO APPLICABLE BUILDING CODES AND ORDINANCES. WHERE MORE THAN ONE CODE OR ORDINANCE CONFLICT WITH EACH OTHER, THE MORE RESTRICTIVE CODE SHALL GOVERN.
2. THE CONTRACTOR SHALL VERIFY ALL EXISTING CONDITIONS AT THE SITE AND SHALL NOTIFY THE ARCHITECT IMMEDIATELY OF ANY UNCERTAINTIES OR DISCREPANCIES WITH DRAWINGS.
3. THE CONTRACTOR SHALL VERIFY THE LOCATIONS OF ALL UTILITIES AT THE SITE, PROTECT THEM FROM DAMAGE AND REPORT ANY DISCREPANCIES WITH DRAWINGS.
4. THE CONTRACTOR SHALL INSURE THE HEALTH AND SAFETY OF THE PUBLIC AND ALL WHO ENTER THE BUILDING DURING CONSTRUCTION.
5. THE CONTRACTOR SHALL VERIFY AND COORDINATE THE WORK OF SUBCONTRACTORS AND ALL DRAWINGS PRIOR TO PROCEEDING WITH ANY WORK OR FABRICATION.
6. DRAWINGS SHALL NOT BE SCALED. NOTIFY THE ARCHITECT IMMEDIATELY OF ANY CONFLICTS.
7. ALL CONSTRUCTION SHALL MEET OR EXCEED LOCAL INDUSTRY STANDARDS. DETAILS ARE PROVIDED TO INDICATE MINIMUM QUALITY AND TO GIVE STANDARDS OF CONSTRUCTION. IF A CONDITION IS NOT SPECIFICALLY DETAILED, SUBMIT A SUGGESTED DETAIL FOR GUIDANCE AND APPROVAL.
8. THE CONTRACTOR SHALL BE RESPONSIBLE FOR DESIGN, PERMITTING AND CONSTRUCTION OF MECHANICAL AND ELECTRICAL WORK AS REQUIRED TO ACCOMMODATE CONSTRUCTION AND SHALL PROVIDE ALL NECESSARY SHAFTS, OPENINGS, BASES AND STRUCTURAL SUPPORT FOR DUCTS, PIPES, CONDUITS AND EQUIPMENT.
9. DIMENSIONS ON PLANS ARE TO FACE OF STUD, CENTER OF COLUMN, CENTER OF MULLION, FACE OF CONCRETE, FACE OF MASONRY, FACE OF FRAME OR FACE OF ROUGH OPENING, UNLESS OTHERWISE NOTED.
10. LABORATORY TESTING AND SPECIAL INSPECTION REQUIRED IN ACCORDANCE WITH IBC CHAPTER 17 FOR ALL EARTHWORK COMPACTION, FIELD WELDING, HIGH STRENGTH BOLTING AND ALL STRUCTURAL CONCRETE. OWNER TO HIRE AN INDEPENDENT SPECIAL INSPECTOR AND TESTING LAB FOR ALL CODE REQUIRED TESTING AND SPECIAL INSPECTIONS.
11. REPAIR / REPLACE EXISTING WALL FLOOR AND CEILING FINISHES TO MATCH EXISTING ADJACENT FINISHES WHEN DAMAGED DURING COURSE OF CONSTRUCTION.
12. DEMOLISH ALL EXISTING BUILDING COMPONENTS NECESSARY TO CONSTRUCT WORK CAP ALL EXISTING UTILITIES (PLUMBING, ELECTRICAL AND MECHANICAL) BEHIND WALLS FLOORS, ETC.
13. SUSPENDED CEILINGS TO BE DESIGNED FOR SEISMIC DESIGN CATEGORY D, E, OR F.
14. REFER TO SHEET A600 FOR STANDARD CASEWORK DETAILS AND PLUMBING FIXTURE AND TOILET ACCESSORIES MOUNTING HEIGHTS.

THE APPROVED CONSTRUCTION PLANS, DOCUMENTS AND ALL ENGINEERING MUST BE POSTED ON THE JOB AT ALL INSPECTIONS IN A VISIBLE AND READILY ACCESSIBLE LOCATION.

FULL SIZED LEDGIBLE COLOR PLANS ARE REQUIRED TO BE PROVIDED BY THE PERMITEE ON SITE FOR INSPECTION

CODE INFORMATION

GOVERNING CODE
2018 INTERNATIONAL BUILDING CODE (IBC) WASHINGTON STATE AMENDMENTS
2018 INTERNATIONAL EXISTING BUILDING CODE (IEBC) WASHINGTON STATE AMENDMENTS
2018 WASHINGTON STATE ENERGY CODE (WSEC)
2018 UNIFORM PLUMBING CODE (UPC)

OCCUPANCY CLASSIFICATION
IBC CHAPTER 3 — B BUSINESS

CONSTRUCTION TYPE
IBC SECTION 602 — V-B (NON-FIRE RATED) (COMBUSTIBLE CONSTRUCTION)

AUTOMATIC FIRE SPRINKLER SYSTEM
IBC CHAPTER 9 — BUILDING IS NOT EQUIPPED WITH AN AUTOMATIC FIRE SPRINKLER SYSTEM.

FIRE ALARM AND DETECTION SYSTEM
IBC CHAPTER 9 — BUILDING IS NOT EQUIPPED WITH AN AUTOMATIC FIRE ALARM AND DETECTION SYSTEM.

OCCUPANT LOAD
IBC TABLE 1004.5

TOTAL — 52 OCCUPANTS *

- BUSINESS AREAS: ENTRY, SIGN ROOMS, OFFICES, WORK AREAS
  3,952 SQ FT / 150 = 27 OCCUPANTS (1 OCCUPANT / 150 GROSS SQ FT)
- ASSEMBLY AREAS: TRAINING ROOM
  372 SQ FT / 15 = 25 OCCUPANTS (1 OCCUPANT / 15 NET SQ FT)

Approval of submitted plans is not an approval of omissions or oversight by this office or noncompliance with any applicable regulations of local government. The contractor is responsible for making sure that the building complies with all applicable building codes and regulations of the local government.

ZONING INFORMATION

GOVERNING CODE — CITY OF PUYALLUP MUNICIPAL CODE TITLE 20 - ZONING CODE

PARCEL NUMBER — 0419044082

ZONING
CHAPTER 20.28 — OP - PROFESSIONAL OFFICE

APPROVED PLAN
CITY OF PUYALLUP
PLANNING DIVISION
APPROVED BY: NComstock
DATE: 09/20/2021
CASE NO.: B-21-0583
CONDITIONS: N/A

B-21-0583
CITY OF PUYALLUP

Helix design group

AMERICAN INSTITUTE OF ARCHITECTS

6934 REGISTERED ARCHITECT
LOWELL CATE
STATE OF WASHINGTON

HELIX DESIGN GROUP, INC

OWNER
PLAZA 512 LLC
2505 E. MAIN
PUYALLUP, WA 98372

CONTACT: JESS QUNELL
PHONE: (206) 909-7539
EMAIL: JQUNELL@HOTMAIL.COM

ARCHITECT
HELIX DESIGN GROUP, INC.
6021 12th STREET EAST SUITE 201
TACOMA, WASHINGTON 98424

CONTACTS:
DIANE BARRINGER, PROJECT MGR
LOWELL CATE, PRINCIPAL
PHONE: (253) 922-9037
EMAIL:
DIANEB@HELIXDESIGNGROUP.NET

GENERAL CONTRACTOR
SUPERIOR BUILDERS, INC.
P.O. BOX 1849
MILTON, WA 98354

CONTACT: JEFF SCHWEITZER
PHONE: (253) 922-7160
EMAIL: JEFFS@SBITACOMA.BIZ

COVER SHEET

STEWART TITLE
PLAZA 512
BUILDING
TENANT
IMPROVEMENT

PUYALLUP, WASHINGTON

REVISION		DATE
1	CITY COMMENTS	9.3.21

DATE	JOB NO.
07.27.21	i21-031

PERMIT SET

G001

WHITE
DRAWING NO.

© HELIX DESIGN GROUP, INC.: All rights reserved. No part of this document may be reproduced in any form or by any means without permission in writing from Helix Design Group

PLOTTED: 8/30/2021 5:08:25 PM PROJECT: i21-031 - STEWART TITLE
FILE PATH: C:\Users\JessicaC\Desktop\Revit 2020 Projects\i21-031-A-T(R20) Stewart Title Office_JessicaC.rvt

STANDARD ABBREVIATIONS LIST

(D)	DEMOLISH / DEMOLITION	FTG	FOOTING	QTY	QUANTITY
(E)	EXISTING	G.A.	GYPSUM ASSOCIATION	R	RADIUS
(F)	FUTURE	G.F.C.I.	GOVERNMENT FURNISHED CONTRACTOR INSTALLED	R.	RISER
(R)	RELOCATE	G.F.G.I.	GOVERNMENT FURNISHED GOVERNMENT INSTALLED	R.D.	ROOF DRAIN
(r)	REMOVABLE	GA	GAUGE	R.L.	ROOF LEADER
(S)	SALVAGE	GALV	GALVANIZED	R.O.	ROUGH OPENING
@	AT	GB	GRAB BAR	R.O.W.	RIGHT OF WAY
A.B.	ANCHOR BOLT	GC	GENERAL CONTRACTOR	RB	RUBBER BASE
A.F.F.	ABOVE FINISH FLOOR	GEN	GENERAL	RCD	ROLLING COUNTER DOOR
ABB	ABBREVIATION	GFRG	GLASS FIBER REINFORCED GYPSUM	REF	REFRIGERATOR
ACM	ALUMINUM COMPOSITE MATERIAL WALL PANEL	GL	GLASS	REINF	REINFORCED
ACP	ARCHITECTURAL CONCRETE PAVER	GLB	GLUE LAMINATE BEAM	REQD	REQUIRED
ACT	ACOUSTICAL CEILING TILE	GSF	GROSS SQUARE FOOTAGE	RF	RUBBER FLOORING
ADA	AMERICANS WITH DIABLILITIES ACT	GT	GROUT	RLT	RELITE
ADD'L	ADDITIONAL	GWB	GYPSUM WALL BOARD	RPM	RESIN PANEL MATERIAL
ADJ	ADJUSTABLE	GYP	GYPSUM	RSD	ROLLING SERVICE DOOR
AESS	ARCHITECTURAL EXPOSED STRUCTURAL STEEL	H.B.	HOSE BIB	RTR	RUBBER TREAD RISER
ALUM	ALUMINUM	H.C.	HANDICAPPED	RTU	ROOF TOP UNIT
AP	ACCORDIAN PARTITION	H.D.	HAND DRYER	S	SOUND
APC	ARCHITECTURAL POLISHED CONCRETE	HC	HOLLOW CORE	S.D.	SOAP DISPENSER
AS	ASPHALT SHINGLES	HDR	HEADER	S.O.G.	SLAB ON GRADE
ASMB	ASSEMBLY	HDW	HARDWARE	SAE	SLIDING AUTOMATIC ENTRANCE
AWF	ACOUSTICAL WALL FABRIC	HK	HOOK	SC	SOLID CORE
AWP	ARCHITECTURAL WALL PANEL	HLB	HORIZONTAL LOUVER BLINDS	SCH	SCHEDULE
B	BOLLARD	HM	HOLLOW METAL	SCR	SHOWER CURTAIN ROD
B.O.F.	BOTTOM OF FOOTING	HMS	HORIZONTAL METAL SIDING	SD	SECTIONAL DOORS
BB	BACKERBOARD	HOR	HORIZONTAL	SDG	SIDING
BD	BOARD	HR	HOUR	SDT	STATIC DISSIPATED TILE
BF	BRACED FRAME	HT	HEIGHT	SF	SQUARE FOOT
BLDG	BUILDING	HWD	HARDWOOD	SFS	STOREFRONT SYSTEM
BLKG	BLOCKING	I.D.	INSIDE DIAMETER	SG	SAFETY GLASS
BM	BEAM	IMP	INSULATED METAL PANEL	SGS	SECURITY GRILLE SYSTEM
BN	BIRD NETTING	INT	INTERIOR	SH	SOAP HOLDER
BOT	BOTTOM	IRGWB	IMPACT RESISTANT GYPSUM WALL BOARD	SHC	SHOWER CURTAIN
BRG	BEARING	ISO	POLYISOCYANURATE RIGID INSULATION	SHT	SHEET
BRK	BRICK MASONRY UNIT	JAN	JANITOR	SHTG	SHEATHING
BTWN	BETWEEN	JST	JOIST	SIM	SIMILAR
C	COMPACT	JT	JOINT	SJ	SEISMIC JOINT
C.I.	CONTINUOUS INSULATION	LAM	LAMINATE	SLR	SEALER
C.J.	CONTROL JOINT	LAV	LAVATORY	SLS	SKYLIGHT SYSTEM
C.O.S.	CENTER OF STRUCTURE	LBR	LUMBER	SMU	STONE MASONRY UNIT
CAB	CABINET	LBS.	POUNDS (WEIGHT)	SND	SANITARY NAPKIN DISPENSER
CB	COVE BASE	LG	LAMINATED GLASS	SNR	SANITARY NAPKIN RECEPTACLE
CBB	CEMENTITIOUS BACKER BOARD	LIN	LINOLEUM	SNTD	SANITARY NAPKIN AND TAMPON DISPENSER
CER	CERAMIC	LP	LIGHT POLE	SPEC	SPECIFICATIONS
CG	CORNER GUARD	LVP	LUXURY VINYL PLANK FLOORING	SPGL	SPANDREL GLASS
CHRL	CHAIR RAIL	LVR	LOUVER	SPMR	SINGLE-PLY MEMBRANE ROOFING
CLG	CEILING	LVT	LUXURY VINYL TILE	SQ	SQUARE
CLK	CLINKER TILE	M	MORTAR	SS	STAINLESS STEEL
CLR	CLEAR	M-R	MOLD RESISTANT	SSM	SOLID SURFACE MATERIAL
CMU	CONCRETE MASONRY UNIT	MAS	MASONRY	SSMR	STANDING SEAM METAL ROOFING
COL	COLUMN	MAX	MAXIMUM	ST	STONE
CONC	CONCRETE	MB	MARKERBOARD	STD	STANDARD
CONST	CONSTRUCTION	MC	MEDICINE CABINET	STL	STEEL
CONT	CONTINUOUS	MCP	METAL CEILING PANELS	STN	STAIN
COORD	COORDINATE	MDF	MEDIUM DENSITY FIBERBOARD	SV	SHEET VINYL
CPT	CARPET	MECH	MECHANICAL	T	TREAD
CU	CUBIC	MEP	MECHANICAL, ELECTRICAL, PLUMBING	T&G	TONGUE AND GROOVE
CV	COVER	MES	MECHANICAL EQUIPMENT SCREEN	T.B.	TOWEL BAR
CWS	CURTAIN WALL SYSTEM	MF	METAL FABRICATIONS	T.I.	TENANT IMPROVEMENT
D	DEPTH	MFR	MANUFACTURER	T.O.	TOP OF
D.F.	DRINKING FOUNTAIN	MFW	MOVEABLE FIRE WALL	T.O.B.	TOP OF BEARING
D.S.	DOWNSPOUT	MIN	MINIMUM	T.O.F.	TOP OF FLOOR
DBL	DOUBLE	MIN.	MINUTE	T.O.W.	TOP OF WALL
DFT	DRAFTING	MIR	MIRROR	T.S.C.D.	TOILET SEAT COVER DISPENSER
DIA	DIAMETER	MISC	MISCELLANEOUS	TB	TACKBOARD
DM	DECORATIVE METAL	MMV	MANUFACTURED MASONRY VENEER	TBB	TILE BACKERBOARD
DML	DECORATIVE METAL LAMINATE	MR	MOISTURE RESISTANT	TC	TOILET COMPARTMENTS
DN	DOWN	MRP	METAL ROOFING PANEL	TCP	TILT-UP CONCRETE PANEL
DR	DOOR	MRS	METAL RAILING SYSTEM	TD	TRAFFIC DOOR
DTL	DETAIL	MS	MANUFACTURED SIDING	TEMP	TEMPORARY
DW	DISHWASHER	MSP	METAL SOFFIT PANEL	TFR	TRANSFORMER
E.F.	EXHAUST FAN	MSS	METAL STAIR SYSTEM	THK	THICK
E.P.	ELECTRICAL PANEL	MTL	METAL	THML	THERMAL
EA	EACH	MV	MASONRY VENEER	TL	TILE
EF	EPOXY FLOORING	MWP	METAL WALL PANEL	TPD	TOILET PAPER DISPENSER
EIFS	EXTERIOR INSULATION FINISH SYSTEM	N.I.C.	NOT IN CONTRACT	TRTD	TREATED
E.J	EXPANSION JOINT	N.T.S.	NOT TO SCALE	TRZ	TERRAZZO
E.JC	EXPANSION JOINT COVER	N/A	NOT APPLICABLE	TS	TUBE STEEL
EL	ELEVATION	NO.	NUMBER	TWF	TACKABLE WALL FABRIC
ELECT	ELECTRICAL	NOM	NOMINAL	TYP	TYPICAL
ELEV	ELEVATOR	NSM	NATURAL STONE MATERIAL	U.N.O.	UNLESS NOTED OTHERWISE
ENV	ENVELOPE	NTS	NOTES	UNFIN	UNFINISHED
EPS	EXPANDED POLYSTYRENE RIGID INSULATION	O.C.	ON CENTER	VB	VAPOR BARRIER
EQ	EQUAL	O.D.	OUTSIDE DIAMETER	VCT	VINYL COMPOSITION TILE
EQUIP	EQUIPMENT	O.H.	OVERHEAD	VERT	VERTICAL
EXP	EXPANSION	O.R.D.	OVERFLOW ROOF DRAIN	VMS	VERTICAL METAL SIDING
EXT	EXTERIOR	O.R.L.	OVERFLOW ROOF LEADER	VP	VENEER PLASTER
F.D.	FLOOR DRAIN	O.S.	OVERFLOW SCUPPER	W	WIDTH
F.E.	FIRE EXTINGUISHER	OPNG	OPENING	W.C.	WATER CLOSET
F.H.	FIRE HYDRANT	OPP	OPPOSITE	W.W.F.	WELDED WIRE FABRIC
F.I.C.	FURNISHED AND INSTALLED BY CONTRACTOR	OSB	ORIENTED STRAND BOARD	W/	WITH
F.I.O.	FURNISHED AND INSTALLED BY OWNER	OZ	OUNCE	W/O	WITHOUT
F.O.I.C.	FURNISHED BY OWNER INSTALLED BY CONTRACTOR	P.A.F.	POWER ACCUATED FASTNER	WAIN	WAINSCOT
F.O.S.	FACE OF STRUCTURE	P.T.	PRESSURE TREATED	WB	WHITEBOARD
F.P.	FLAG POLE	PAC	PRECAST ARCHITECTURAL CONCRETE	WC	WALL COVERING
FDN	FOUNDATION	PCS	PORTLAND CEMENT STUCCO	WD	WOOD
FF	FACTORY FINISH	PCSU	PRECAST CONCRETE SOLID UNIT	WF	WOOD FLOORING
FH	FULL HEIGHT	PERP	PERPENDICULAR	WG	WIRE GLASS
FIG	FIGURE	PLAM	PLASTIC LAMINATE	WH	WATER HEATER
FIN	FINISH	PLY	PLYWOOD	WIN	WINDOW
FLR	FLOOR	PP	POWER POLE	WOM	WALK OFF MAT
FP	FIREPROOFING	PS	PROJECTION SCREEN	WP	WORK PONT
FRC	FIBER REINFORCED CEMENTITIOUS PANEL	PSC	PLASTER SKIM COAT OVER CONCRETE	WRB	WEATHER RESISTIVE BARRIER
FRL	FIBER REINFORCED LAMINATE	PSF	POUND PER SQUARE FOOT	WRGWB	WATER RESISTANT GYPSUM WALLBOARD
FRMG	FRAMING	PSMU	PRECAST STONE MASONRY UNIT	WS	WOOD SIDING
FRP	FIBER REINFORCED PANEL	PT	PAINT	WSEC	WASHINGTON STATE ENERGY CODE
FRSG	FIRE RATED SAFETY GLASS	PTD	PAPER TOWEL DISPENSER	WT	WEIGHT
FRT	FIRE-RETARDANT TREATED	PTDWR	PAPER TOWEL DISPENSER WASTE RECEPTACLE	WWS	WINDOW WALL SYSTEM
FT	FOOT / FEET			XPS	EXTRUDED POLYSTYRENE RIGID INSULATION
				Y.D.	YARD DRAIN
				℄	CENTERLINE

B-21-0583
CITY OF PUYALLUP

COLORS AND MATERIALS SCHEDULE

SYMBOL	MATERIAL	MANUFACTURER	SPECIFICATIONS	COLOR / PATTERN / TYPE	LOCATION
DIVISION 6 - WOOD AND PLASTIC					
PLAM-3	PLASTIC LAMINATE	WILSONART	[1] / [C]	COLOR: 7991-38 NEOWALNUT	WAINSCOT
DIVISION 8 -OPENINGS					
ALUM-1	ALUMINUM FRAMES			COLOR: CLEAR SATIN ANODIZED ALUMINUM	
DR-1	FLUSH WOOD DOORS		SOLID CORE / 1-3/4" THICK / [3]	COLOR: [4]	
GL-1	INSULATED GLASS			COLOR: CLEAR	INTERIOR RELITES, DOORS, FRAMES
HDW-1	HARDWARE			FINISH: 626 BRUSHED SATIN CHROME (US26D)	DOOR HARDWARE
DIVISION 9 - FINISHES					
-	STACKED STONE VENEER	FLOOR AND DECOR	ROCK RIDGE NEPAL SILVER SPLITFACE MARBLE PANEL LEDGER	COLOR: GRAY	ACCENT WALL AT RECEPTION
-	RUBBER FLOOR TRANSITION	ROPPE		COLOR: MATCH RB-1	
ACT-1	ACOUSTICAL CEILING TILE	ARMSTRONG CEILINGS	#698 / MESA SECOND LOOK / ANGLED TEGULAR / 24X48	COLOR: WHITE	
CPT-1	CARPET	SHAW CONTRACT	SCULPT TILE 5T007 / SIZE: 24"X24" / INSTALL: QUARTER TURN	COLOR: 83515 ZINC	GENERAL
LVP-1	LUXURY VINYL PLANK FLOORING	ENGINEERED FLOORS	CASCADE #V0255_0800 / 20 MIL / SIZE: 7"X48"	COLOR: ASPEN	
PT-A	PAINT	MILLER PAINTS	TWO COATS / [2] / [D]	COLOR: 0030 LADY NICOLE	GENERAL
PT-B	WHITE BOARD PAINT	BENJAMIN MOORE	NOTABLE DRY ERASE PAINT / [D]	COLOR: CLEAR	USE WITH PT-A, TRAINING ROOM
RB-1	RUBBER BASE	ROPPE	STANDARD TOE BASE / 4" HIGH / CONTINUOUS LENGTH	COLOR: 123 CHARCOAL	
SV-1	SHEET VINYL	MANNINGTON COMMERCIAL	ENTWINED RESILIENT SHEET / BURLAP	COLOR: ETW204 OYSTER	
DIVISION 10 - SPECIALTIES					
-	GRAB BAR	BOBRICK	B-6806 / CONCEALED MOUNTING FLANGE / 1-1/2" DIAMETER TUBING / 18-GAUGE / STRAIGHT	FINISH: SATIN FINISH STAINLESS STEEL	
-	SOUND BARRIER ACOUSTIC VINYL	ACOUSTICAL SOLUTIONS	AUDIOSEAL SOUND BARRIER OR SIMILAR	FINISH: BLACK	
GL-2	MIRROR	BOBRICK	B-290 / 24X36 / WELDED FRAME	FINISH: SATIN FINISH STAINLESS STEEL	
PTD-1	PAPER TOWEL DISPENSER	BOBRICK	B-4262 / SURFACE MOUNTED / CONTURA SERIES	COLOR: SATIN FINISH STAINLESS STEEL	
SD-1	SOAP DISPENSER	BOBRICK	B-4112 / SURFACE MOUNTED / CONTURA SERIES	COLOR: SATIN FINISH STAINLESS STEEL	
SNR-1	SANITARY NAPKIN RECEPTACLE	BOBRICK	B-270 / CONTURA SERIES / SURFACE MOUNTED	COLOR: SATIN FINISH STAINLESS STEEL	
TPD-1	TOILET PAPER DISPENSER	BOBRICK	B-4388 / CONTURA SERIES / RECESSED MULTI-ROLL	COLOR: SATIN FINISH STAINLESS STEEL	
DIVISION 12 - FURNISHINGS					
-	ROLLER SHADES	TIMBERBLINDS	COMMERCIAL DIVISION [5]	COLOR: [4]	
NSM-1	NATURAL STONE MATERIAL	COSMOS SURFACES	QUARTZ / 3CM / [C]	COLOR: WHITE ZEN	
PLAM-1	PLASTIC LAMINATE	WILSONART	[C]	COLOR: 1885K-07 MARMO BIANCO	
PLAM-2	PLASTIC LAMINATE	WILSONART	USE WITH BLACK MELAMINE INTERIORS / [C]	COLOR: 4948K-18 COSMIC STRANDZ	
PLAM-4	PLASTIC LAMINATE		[4] / [C]	COLOR: [4]	
DIVISION 23 - MECHANICAL					
-	MECHANICAL COVERS			COLOR: WHITE	
DIVISION 26 - LIGHTING					
-	OUTLET COVERS AND RECEPTACLES			COLOR: WHITE	
LTG-1	LED LAY IN LIGHT FIXTURE	PHILIPS	DAY-BRITE CFI / RECESSED / FLUXGRID 2X4 / 2FGG48L835-4-D-UNV-DIM / OR SIMILAR	COLOR: WHITE	
LTG-2	DECORATIVE PENDANT	BESA LIGHTING	KENO / 3W LED / FLAT CANOPY / SATIN NICKEL FINISH / GLASS SHADE / 1XT-KENOWH-LED-SN / OR SIMILAR	COLOR: WHITE SAND	
LTG-3	RECESSED DOWNLIGHT FIXTURE	LIGHTOLIER	LYTEPROFILE / 6" ROUND DOWNLIGHT / 1500 LUMENS / 80 CRI / 3500 K / SPECULAR CLEAR REFLECTOR / OR SIMILAR	COLOR: WHITE	
LTG-4	SURFACE MOUNTED LINEAR LIGHT FIXTURE	LITHONIA LIGHTING	Z SERIES / LED STRIPLIGHT / ZLD1 / 48" L / 3500K / OR SIMILAR	COLOR: WHITE	
LTG-5	VANITY LIGHT FIXTURE	INDESSA LIGHTING	#444 LIGHT BEAM / LED / 24" / OR SIMILAR	COLOR: BRUSHED ALUMINUM	
LTG-6	SURFACE MOUNTED LED LIGHT FIXTURE			COLOR: WHITE	
LTG-7	EMERGENCY EXIT SIGN	COOPER LIGHTING	SURE LITES / CLEAR ACRYLIC PANEL / GREEN LETTERING / OR SIMILAR	COLOR: BRUSHED ALUMINUM	

COLORS AND MATERIALS SCHEDULE

NOTES

[1] AT WAINSCOT, PROVIDE 3/8" MDF SUBSTRATE WITH SATIN ANODIZED METAL TRIM.
[2] EGGSHELL ON WALLS AND CEILINGS / SEMI-GLOSS ON DOORS AND DOOR FRAMES.
[3] (DR-1): SOLID CORE, NON-RATED: AWS/AWI SECTION 9, TYPE PC-7 (PARTICLEBOARD, MDF OR AGRIFIBER CORE; CORE WITH 3 LAYERS ON EACH SIDE). AWS/AWI FIGURE 9-012.
[4] VERIFY SPECIFICATION WITH TENANT. TENANT TO SELECT FROM MANUFACTURER'S FULL RANGE OF COLORS.
[5] (ROLLER SHADES): MANUAL / STAINLESS STEEL CHAIN / INTERNAL HEMBAR / FASCIA. SHADECLOTH: 3% OPENNESS / MERMET, E-SCREEN FABRIC / COLOR: 002007 WHITE/PEARL. METAL TRIM: VERIFY FINISH OF ALL EXPOSED COMPONENTS WITH TENANT.

SPECIFICATIONS NOTES

[A] INTERIOR FINISH CARPENTRY: PERFORM WORK IN ACCORDANCE WITH AWS/AWI PREMIUM GRADE QUALITY STANDARDS.
[B] FLUSH WOOD DOORS AND FRAMES: IN ACCORDANCE WITH AWS/AWI PREMIUM GRADE QUALITY STANDARDS.
[C] MANUFACTURED WOOD CASEWORK: IN ACCORDANCE WITH AWS/AWI PREMIUM GRADE QUALITY STANDARDS.
[D] PAINTING: ALL WORK SHALL BE PREMIUM GRADE IN ACCORDANCE WITH MASTER PAINTERS INSTITUTE (MPI) ARCHITECTURAL PAINTING SPECIFICATIONS MANUALS.

CODE PLAN LEGEND

DESCRIPTION	SYMBOL AND TEXT
ROOM IDENTIFICATION room name room number	ROOM NAME 100
ROOM OCCUPANT LOAD room occupant count	00
EXIT LOAD exit occupant count	00
WALL MOUNTED FIRE EXTINGUISHER wall mounted fire extinguisher	F.E.
EXIT ACCESS TRAVEL DISTANCE maximum length of exit access travel (pathway) per IBC TABLE 1006.2.1	XX FT
EXIT AND EXIT ACCESS DOORWAY CONFIGURATION two exits or exit access doorways per IBC 1007.1.1	XX FT XX FT

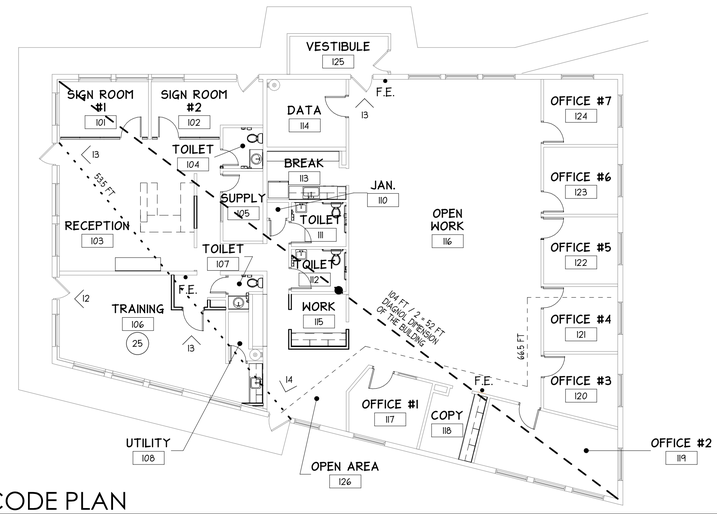

10G CODE PLAN
3/32" = 1'-0"

Helix design group

AMERICAN INSTITUTE OF ARCHITECTS

8934 REGISTERED ARCHITECT LOWELL CATE STATE OF WASHINGTON

HELIX DESIGN GROUP, INC

COLORS AND MATERIALS SCHEDULE, STANDARD ABBREVIATIONS, CODE PLAN

STEWART TITLE PLAZA 512 BUILDING
TENANT IMPROVEMENT
PUYALLUP, WASHINGTON

REVISION	DATE

DATE	JOB NO.
07.27.21	121-031

PERMIT SET

G040

WHITE
DRAWING NO.

©HELIX DESIGN GROUP, INC.: All rights reserved. No part of this document may be reproduced in any form or by any means without permission in writing from Helix Design Group.

PLOTTED: 7/27/2021 1:14:39 PM PROJECT: 121-031 - STEWART TITLE
FILE PATH: C:\Users\JessicaC\Desktop\Revit 2020 Projects\121-031-A-TI(R20) Stewart Title Office_JessicaC.rvt

DEMOLITION LEGEND

DESCRIPTION	SYMBOL AND TEXT
EXISTING DOOR AND FRAME existing door, frame and hardware to remain	
DEMOLITION DOOR AND FRAME demolition of existing door, frame and hardware	
DEMOLITION RELITE demolition of existing frame and glazing	
DEMOLITION PLUMBING FIXTURES demolition of existing plumbing fixtures and related components	
DEMOLITION BUILT-IN KITCHEN CASEWORK demolition of existing base cabinets, wall cabinets, plumbing fixtures and appliances	
DEMOLITION BUILT-IN CASEWORK demolition of existing built-in casework	

DEMOLITION NOTES

SYMBOL	NOTE
D01	DEMOLISH BASE CASEWORK ONLY.
D02	UPPER CASEWORK TO REMAIN.
D03	DEMOLISH PLUMBING FIXTURES, TOILET ACCESSORIES, AND CASEWORK. SALVAGE PLUMBING CONNECTIONS FOR REUSE.
D04	DEMOLISH GRAB BAR, WALL MOUNTED BLOCKING, TOILET ACCESSORIES, PLUMBING FIXTURES, AND CASEWORK. SALVAGE PLUMBING CONNECTIONS FOR REUSE.
D05	DEMOLISH OPENING, REFER TO CEILING PLAN FOR SOFFIT HEIGHT.
D06	DEMOLISH SHELVING.
D07	DEMOLISH PORTION OF WALL AND DOOR TO CREATE OPENING.
D08	DEMOLISH BUILT-IN STORAGE.
D09	DEMOLISH MAILDROP AND INFILL WALL TO MATCH ADJACENT CONSTRUCTION.
D10	DEMOLISH SHOWER ENCLOSURE, FIXTURES, AND ACCESSORIES. CAP PLUMBING. INSTALL AND FINISH, OR PATCH AND REPAIR, GWB WHERE SHOWER WAS TO MATCH ADJACENT.

GENERAL NOTES

NOTE

1. ABBREVIATIONS:

   (D) - DEMOLITION
   (R) - RELOCATE
   (E) - EXISTING TO REMAIN
   (S) - SALVAGE

   REFER TO SHEET G040 FOR STANDARD ABBREVIATIONS LIST.

2. THESE PLANS DELINEATE THE BASIC SCOPE OF WORK FOR THE REMOVAL OF EXISTING MATERIALS. THESE PLANS HAVE BEEN DEVELOPED FROM OWNER PROVIDED ASBUILTS AND MAY VARY FROM ACTUAL FIELD CONDITIONS. THE DEMOLITION DRAWINGS AND NOTES ARE PROVIDED WITH THE INTENT TO GENERALLY DESCRIBE AREA AND LIMITS OF WORK. THE CONTRACTOR SHALL BE FAMILIAR WITH THE SITE AND CONDITIONS THEREON. ALL BIDDERS ARE ENCOURAGED TO PERFORM A WALK THROUGH PRIOR TO BIDDING.
3. COORDINATION OF THESE DRAWINGS WITH THE REQUIREMENTS FOR CONTRACT WORK IS THE RESPONSIBILITY OF THE GENERAL CONTRACTOR. DISCREPANCIES BETWEEN OR WITHIN CONTRACT DOCUMENTS SHALL BE REPORTED TO THE ARCHITECT IMMEDIATELY.
4. CONTRACTOR SHALL PROVIDE PROTECTION OF MATERIALS, EQUIPMENT AND FINISHES WHICH ARE TO REMAIN OR NOTED TO BE SALVAGED AND/OR RE-USED DAMAGES SHALL BE REPAIRED OR REPLACED AT NO ADDITIONAL COST TO OWNER.
5. CONTRACTOR SHALL DEMOLISH AND/OR CAP ALL UTILITIES CONNECTED TO EQUIPMENT IDENTIFIED TO BE DEMOLISHED OR SALVAGED SUCH THAT THE UTILITY WILL NOT INTERFERE WITH THE RENOVATION OR ADDITION WORK UNDER THIS CONTRACT. (COORDINATE WITH MECHANICAL/ELECTRICAL DRAWINGS)
6. CONTRACTOR SHALL BE RESPONSIBLE FOR SECURELY STORING ALL ITEMS IDENTIFIED TO BE CAREFULLY REMOVED, SALVAGED AND REINSTALLED.
7. CONTRACTOR TO BE RESPONSIBLE FOR CUT AND PATCH AS REQUIRED TO ACCOMMODATE CONSTRUCTION (INCLUDING ALL MECHANICAL AND ELECTRICAL WORK).
8. STABILITY OF THE STRUCTURE DURING CONSTRUCTION IS THE RESPONSIBILITY OF THE CONTRACTOR. ALL TEMPORARY SHORING SUPPORT IS PART OF THIS CONTRACT.
9. DEMOLITION WORK TO ACCOMMODATE BUILDING RENOVATIONS AND SYSTEMS HAS BEEN CONCEPTUALLY SHOWN FOR MAJOR WORK ITEMS. CONTROLS, PIPING, ELECTRICAL AND OTHER SIMILAR ITEMS WHICH MAY REQUIRE CUTTING AND PATCHING HAVE NOT BEEN SHOWN. IT IS THE CONTRACTOR'S RESPONSIBILITY TO PROVIDE CUTTING AND PATCHING REQUIRED FOR ALL WORK IN THE PROJECT.
10. REMOVE EXISTING FLOOR FINISHES AND PREPARE SUBSTRATE IN ALL AREAS SCHEDULED TO RECEIVE FLOOR FINISHES.
11. REMOVE ALL EXISTING CEILING FINISHES AS REQUIRED FOR CONSTRUCTION. REPLACE ALL CEILING TILE AND GRID DAMAGED DURING THE COURSE OF CONSTRUCTION.
12. DEMOLISH EXISTING DATA NOT REQUIRED FOR TENANT'S USE. PATCH AND REPAIR GWB TO MATCH ADJACENT.
13. EXISTING THERMIAL INSULATION SITS ON TOP OF CEILING AND CEILING TILES. PROTECT AND RESTORE INSULATION AFTER ANY CEILING WORK.

WALL TYPES

DESCRIPTION	SYMBOL AND TEXT
WALL TYPE 1 EXISTING WALL TO REMAIN	
WALL TYPE 2 DEMOLITION OF EXISTING WALL	

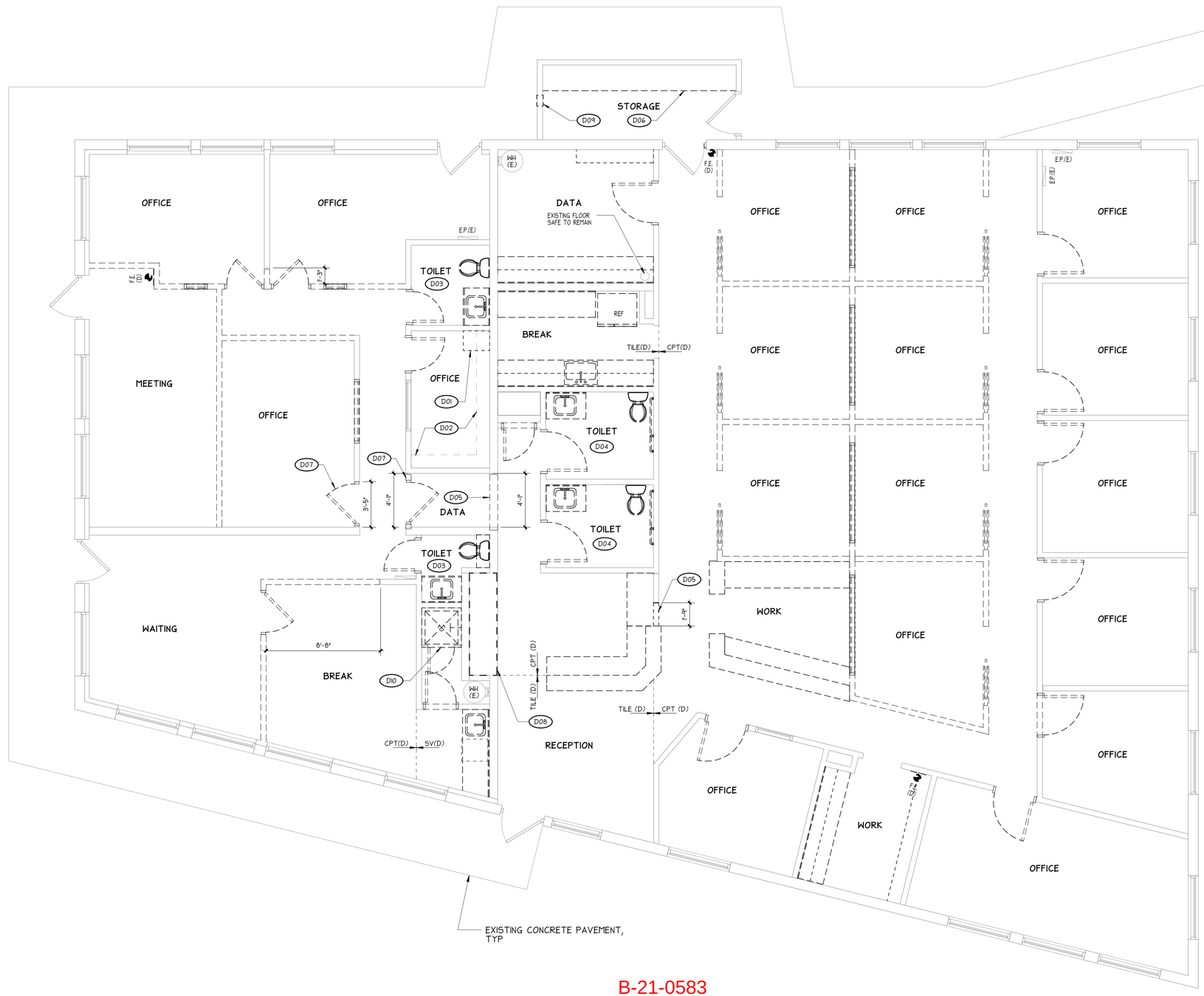

B-21-0583
CITY OF PUYALLUP

10C DEMOLITION FLOOR PLAN
1/4" = 1'-0"

NORTH

SCALE: 1/8" = 1'-0"

Helix design group

AMERICAN INSTITUTE OF ARCHITECTS

8934 REGISTERED ARCHITECT LOWELL CATE STATE OF WASHINGTON

HELIX DESIGN GROUP, INC

DEMOLITION PLAN

STEWART TITLE PLAZA 512 BUILDING
TENANT IMPROVEMENT
PUYALLUP, WASHINGTON

REVISION	DATE

DATE	JOB NO.
07.27.21	i21-031

PERMIT SET

D100

WHITE
DRAWING NO.

©HELIX DESIGN GROUP, INC.: All rights reserved. No part of this document may be reproduced in any form or by any means without permission in writing from Helix Design Group.

PLOTTED: 7/27/2021 1:04:37 PM PROJECT: i21-031 - STEWART TITLE
FILE PATH: C:\Users\JessicaC\Desktop\Revit 2020 Projects\i21-031-A-TI(R20) Stewart Title Office_JessicaC.rvt

FLOOR PLAN LEGEND

DESCRIPTION	SYMBOL AND TEXT
ROOM IDENTIFICATION room name room number	ROOM NAME 100
SWINGING DOOR door number, minimum door strike side clearance distances	1'-6" MIN 101 1'-0" 6"
WALL MOUNTED FIRE EXTINGUISHER wall mounted fire extinguisher	F.E.
ACCENT WALL wall accent finish	PT-X WC-X
EXISTING WATER HEATER existing water heater	WH (E)
FLOORING MATERIAL CHANGE transition line, flooring type	LVT CPT
EXISTING ELECTRICAL PANEL existing recessed panel	EP(E)
POWER AND DATA OUTLETS duplex receptacle located 18" above top of floor (u.n.o.) phone / data outlet located 18" above top of floor (u.n.o.)	+42" +66"

WALL TYPES

DESCRIPTION	SYMBOL AND TEXT
WALL TYPE 1 3 5/8" METAL STUDS @ 16" O.C.	
WALL TYPE 2 EXISTING WALL TO REMAIN	

FLOOR PLAN NOTES

SYMBOL	NOTE
F01	TV, (F.O.I.C.), PROVIDE POWER, DATA, AND BACKING. VERIFY LOCATION WITH TENANT.
F02	PROVIDE NEW EXHAUST IN TOILET ROOMS.
F03	PROVIDE TWO DEDICATED ISOLATED GROUND 110V 20 AMP DUPLEX OUTLETS (NEMA 5-20R) MOUNTED IN THE CENTER OF THE EXISTING PIECE OF PLYWOOD. PLYWOOD TO ACCOMMODATE TENANT PROVIDED IT/DATA CABINET. PAINT PLYWOOD, (PT-A).
F04	PROVIDE 1 (ONE) DEDICATED 110V 20 AMP OUTLET FOR EACH TENANT PROVIDED COPIER AND NETWORK PRINTER (NEMA 5-20R). VERIFY LOCATIONS WITH TENANT.
F05	PREPARE AND PAINT EXISTING SHELVING, (PT-A).
F06	UNDERCOUNTER REFRIGERATOR, (F.O.I.C.)
F07	PROVIDE POWER AND DATA FOR POSTAGE METER AND CHECK WRITER AT COUNTERTOP. VERIFY LOCATIONS WITH TENANT.
F08	PREPARE AND PAINT EXISTING WOOD TRIM AT INTERIOR RELITE, SEMI-GLOSS, (PT-A).
F09	FURNITURE WORKSTATIONS, (F.I.O.), COORDINATE LAYOUT AND ELECTRICAL REQUIREMENTS WITH TENANT.
F10	PAINT PANEL TO MATCH WALL, (PT-A).
F11	REFRIGERATOR WITH ICE MACHINE, (F.O.I.C.)
F12	DISHWASHER, (F.O.I.C.)
F13	PREPARE AND PAINT EXISTING WOOD TRIM AT EXTERIOR WINDOWS, SEMI-GLOSS, (PT-A).
F14	GWB WRAPPED OPENINGS, FINISH TO MATCH ADJACENT, (PT-A).
F15	INFILL WALL TO MATCH ADJACENT CONSTRUCTION AND FINISH.
F16	HVAC CHASE, IF NEEDED.

GENERAL NOTES

NOTE

1. ABBREVIATIONS:

   (D) - DEMOLITION
   (R) - RELOCATE
   (E) - EXISTING TO REMAIN
   (S) - SALVAGE

   REFER TO SHEET G040 FOR STANDARD ABBREVIATIONS LIST.

2. INSTALL SOUND BATT INSULATION AT ALL INTERIOR (STUD) WALLS.
3. ELECTRICAL OUTLETS SHOWN ARE IN ADDITION TO ELECTRICAL CONNECTIONS/OUTLETS REQUIRED FOR BUILDING SYSTEMS, EQUIPMENT, AND CODE GENERAL REQUIREMENTS. COORDINATE ALL FINAL QUANTITIES AND LOCATIONS ON ALL ELECTRICAL PHONE AND DATA OUTLETS WITH TENANT PRIOR TO INSTALLATION.
4. PROVIDE THREE DUPLEX OUTLETS PER SIGNING ROOM, RECEPTION, SUPPLY, TRAINING ROOM, WORK AREA, COPY, BREAK, OFFICES, AND HALLWAY.
5. PROVIDE TWO DATA/VOICE OUTLETS AT SIGNING ROOMS, RECEPTION, SUPPLY, TRAINING ROOM, WORK AREAS, COPY, BREAK, AND OFFICES, LOCATIONS SPECIFIED BY TENANT.
6. PROVIDE ROLLER SHADES AT ALL EXTERIOR WINDOWS.
7. INSTALL TRANSITION EDGE STRIPS BETWEEN FLOORING TYPES AND SURFACES.
8. REPLACE ALL DOOR HARDWARE. REFER TO DOOR SCHEDULE ON SHEET A200.
9. CONTRACTOR TO CONFIRM EXISTING PLUMBING, LIGHTING, ELECTRICAL AND MECHANICAL SYSTEMS TO REMAIN ARE IN LIKE-NEW WORKING CONDITION.
10. REFER TO DETAIL 8A/A600 FOR PLUMBING FIXTURE AND TOILET ACCESSORIES MOUNTING HEIGHTS.
11. REPLACE EXISTING THERMOSTATS, VERIFY LOCATIONS WITH TENANT, COLOR: WHITE.
12. REPLACE ALL VISIBLE ELECTRICAL AND MECHANICAL COVERS, PLATES, AND RECEPTACLES TO BE WHITE COVERS, PLATES AND RECEPTACLES.
13. TENANT TO COORDINATE WITH SIGNAGE COMPANY. CONTRACTOR TO PROVIDE POWER AT EXTERIOR LOCATIONS AS REQUIRED. (ONE LOCATION ON BUILDING, ONE LOCATION AT MONUMENT BY STREET.)

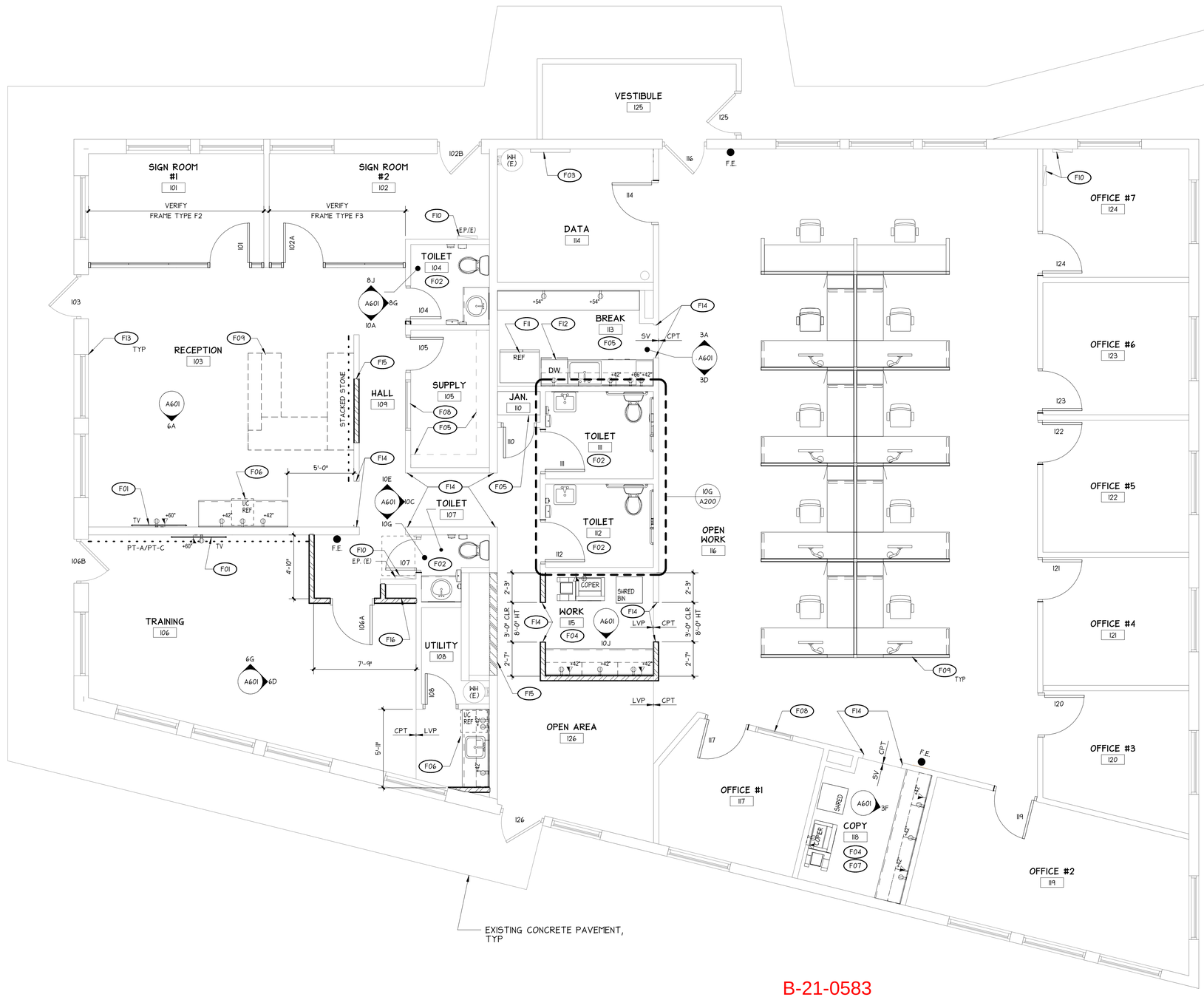

B-21-0583
CITY OF PUYALLUP

10C FLOOR PLAN
1/4" = 1'-0"

NORTH

SCALE: 1/8" = 1'-0"

Helix design group

AMERICAN INSTITUTE OF ARCHITECTS

6934 REGISTERED ARCHITECT LOWELL CATE STATE OF WASHINGTON

HELIX DESIGN GROUP, INC

FLOOR PLAN

STEWART TITLE PLAZA 512 BUILDING
TENANT IMPROVEMENT
PUYALLUP, WASHINGTON

REVISION	DATE

DATE	JOB NO.
07.27.21	121-031

PERMIT SET

A100

WHITE
DRAWING NO.

© HELIX DESIGN GROUP, INC.: All rights reserved. No part of this document may be reproduced in any form or by any means without permission in writing from Helix Design Group.

PLOTTED: 7/27/2021 1:44:28 PM PROJECT: 121-031 - STEWART TITLE
FILE PATH: C:\Users\JessicaC\Desktop\Revit 2020 Projects\121-031-A-TI(R20) Steuart Title Office_JessicaC.rvt

CEILING LEGEND

DESCRIPTION	SYMBOL AND TEXT
CEILING IDENTIFICATION room number material ceiling height	101 ACT-1 8'-0"
SOFFIT material description height	GWB SOFFIT 8'-0"
EXISTING SUSPENDED ACOUSTICAL CEILING SYSTEM existing 2'x4' suspended acoustical ceiling system	
SUSPENDED ACOUSTICAL CEILING SYSTEM 2'x4' tiles, refer to plan for grid starting point, otherwise center layout in space	
EXISTING GWB CEILING SYSTEM existing gwb ceiling and soffit system	
CEILING MOUNTED EXIT SIGN center in ceiling tile or at dimensioned locations shown on plan, direction indicator towards exit, ltg-7	
EXIT SIGN center over exit door, ltg-7	
LED LAY IN LIGHT FIXTURE lay-in led light fixture, ltg-1	
DECORATIVE PENDANT pendant light fixture, ltg-2	
RECESSED DOWNLIGHT FIXTURE recessed led downlight fixture, ltg-3	
SURFACE MOUNTED LINEAR LIGHT FIXTURE surface mounted linear led light fixture, ltg-4	
SURFACE MOUNTED IX4 LIGHT FIXTURE surface mounted lx4 light fixture, ltg-6	
VANITY LIGHT FIXTURE vanity light fixture, ltg-5	
INTERIOR PARTITIONS interior (non-bearing) partitions extend 6 inches above ceilings and soffits	
SOUND BARRIER ACOUSTIC VINYL sound barrier acoustic vinyl	

GENERAL NOTES

NOTE

1. ABBREVIATIONS:

   (D) - DEMOLITION
   (R) - RELOCATE
   (E) - EXISTING TO REMAIN
   (S) - SALVAGE

   REFER TO SHEET G040 FOR STANDARD ABBREVIATIONS LIST.

2. ELECTRICAL DESIGN BUILDER TO PROVIDE ADEQUATE LIGHTING LEVELS IN ALL AREAS OF TENANT SPACE AND ACCOMMODATE AGENCY REQUIREMENTS FOR EMERGENCY EGRESS LIGHTING.
3. EXISTING THERMAL INSULATION SITS ON TOP OF CEILING AND CEILING TILES. PROTECT AND RESTORE INSULATION AFTER ANY CEILING WORK.
4. REPLACE DAMAGED, CHIPPED, OR STAINED ACT TILES AS REQUIRED. MATCH EXISTING.
5. REPLACE ALL LIGHTING WITH LED. REFER TO COLOR AND MATERIALS SCHEDULE FOR FIXTURE TYPE.

CEILING PLAN NOTES

SYMBOL	NOTE
C01	DEMOLISH EXISTING QTY (4) TRACK LIGHTING FIXTURES AND QTY (2) SURFACE MOUNTED LIGHT FIXTURES IN THIS ROOM.
C02	DASHED LINE INDICATES WALL BELOW, TYPICAL.
C03	INSTALL SOUND BARRIER ACOUSTIC VINYL OVER EXISTING INSULATION, EXTEND 24" ON BOTH SIDES OF WALL, VERIFY CEILING SYSTEM CAN SUPPORT ADDITIONAL WEIGHT.
C04	PENDANT LIGHTS OVER RECEPTION DESK, (LTG-2). COORDINATE FINAL LOCATION WITH TENANT AND FURNITURE.
C05	DEMOLISH EXISTING IX4 LIGHT FIXTURES AND CAN LIGHT FIXTURES. PATCH AND REPAIR CEILING TO MATCH ADJACENT.

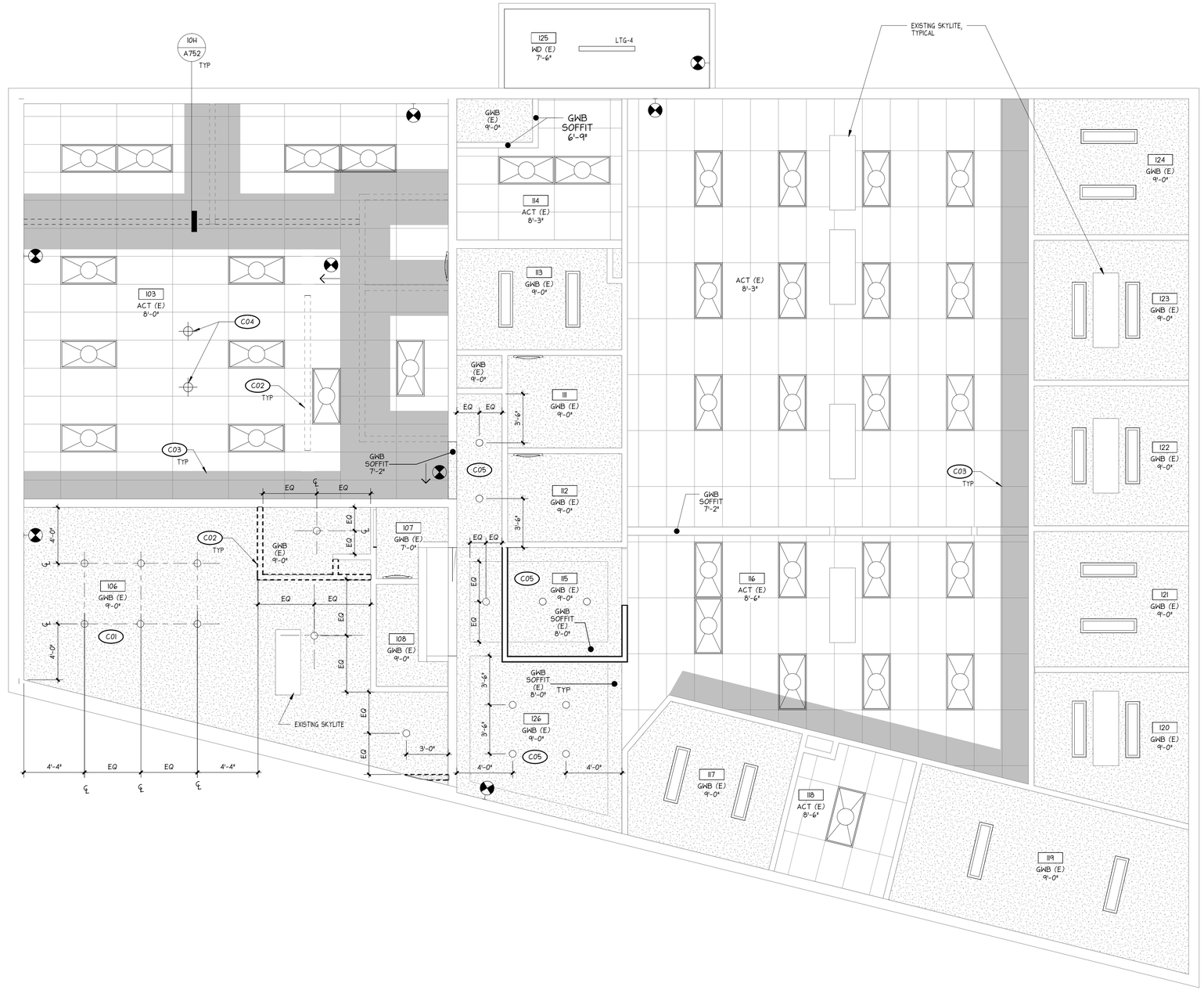

B-21-0583
CITY OF PUYALLUP

10B REFLECTED CEILING PLAN

1/4" = 1'-0"

NORTH

SCALE: 1/8" = 1'-0"

Helix design group

AMERICAN INSTITUTE OF ARCHITECTS

6934 REGISTERED ARCHITECT LOWELL CATE STATE OF WASHINGTON

HELIX DESIGN GROUP, INC

REFLECTED CEILING PLAN, ENLARGED PLAN

STEWART TITLE PLAZA 512 BUILDING
TENANT IMPROVEMENT
PUYALLUP, WASHINGTON

REVISION	DATE

DATE	JOB NO.
07.27.21	I21-031

PERMIT SET

A120

WHITE
DRAWING NO.

© HELIX DESIGN GROUP, INC.: All rights reserved. No part of this document may be reproduced in any form or by any means without permission in writing from Helix Design Group.

PLOTTED: 7/27/2021 1:44:29 PM PROJECT: I21-031 - STEWART TITLE
FILE PATH: C:\Users\JessicaC\Desktop\Revit 2020 Projects\I21-031-A-T(R20) Stewart Title Office_JessicaC.rvt

DOOR SCHEDULE

	DOOR							FRAME					
NO	WIDTH	HEIGHT	TYPE	MATERIAL	FINISH	GLAZING	RATING	HARDWARE GROUP	MATERIAL	FINISH	TYPE	GLAZING	NOTES
101	3'-0"	7'-10"	D1	WD	FF	SG	-	HDW-1	ALUM	FF	F2	SG	
102A	3'-0"	7'-10"	D1	WD	FF	SG	-	HDW-1	ALUM	FF	F3	SG	
102B	3'-0"	6'-8"	(E)	HM(E)	PT	-	-	HDW-3 [2]	WD(E)	PT [1]	F1	-	
103	3'-0"	7'-0"	(E)	ALUM(E)	-	(E)	-	HDW-3 [2] [3]	ALUM(E)/WD(E)	-/PT [1]	(E)	-	
104	2'-4"	6'-8"	D2	WD	FF	-	-	HDW-3 [4]	ALUM	FF	F1	-	
105	2'-6"	6'-8"	D2	WD	FF	-	-	HDW-3	ALUM	FF	F1	-	
106A	3'-0"	6'-8"	D1	WD	FF	SG	-	HDW-1	ALUM	FF	F1	-	
106B	3'-0"	7'-0"	(E)	ALUM(E)	-	(E)	-	HDW-3 [2] [3]	ALUM(E)/WD(E)	-/PT [1]	(E)	-	
107	2'-4"	6'-8"	D2	WD	FF	-	-	HDW-3 [4]	ALUM	FF	F1	-	
108	2'-4"	6'-8"	D2	WD	FF	-	-	HDW-1	ALUM	FF	F1	-	
110	2'-4"	6'-8"	D2	WD	FF	-	-	HDW-1	ALUM	FF	F1	-	
111	3'-0"	6'-8"	D2	WD	FF	-	-	HDW-3 [4]	ALUM	FF	F1	-	
112	3'-0"	6'-8"	D2	WD	FF	-	-	HDW-3 [4]	ALUM	FF	F1	-	
114	3'-0"	6'-8"	D2	WD	FF	-	-	HDW-3	ALUM	FF	F1	-	
116	3'-0"	6'-8"	(E)	HM(E)	PT	-	-	HDW-3	WD(E)	PT [1]	(E)	-	
117	3'-0"	6'-8"	D1	WD	FF	SG	-	HDW-1	ALUM	FF	F1	-	
119	3'-0"	6'-8"	D1	WD	FF	SG	-	HDW-1	ALUM	FF	F1	-	
120	3'-0"	6'-8"	D1	WD	FF	SG	-	HDW-1	ALUM	FF	F1	-	
121	3'-0"	6'-8"	D1	WD	FF	SG	-	HDW-1	ALUM	FF	F1	-	
122	3'-0"	6'-8"	D1	WD	FF	SG	-	HDW-1	ALUM	FF	F1	-	
123	3'-0"	6'-8"	D1	WD	FF	SG	-	HDW-1	ALUM	FF	F1	-	
124	3'-0"	6'-8"	D1	WD	FF	SG	-	HDW-1	ALUM	FF	F1	-	
125	3'-0"	6'-8"	(E)	HM(E)	PT	-	-	HDW-3 [2]	WD(E)	PT [1]	(E)	-	
126	3'-0"	7'-0"	(E)	ALUM(E)	-	(E)	-	HDW-3 [2] [3]	ALUM(E)/WD(E)	-/PT [1]	(E)	-	

SCHEDULE NOTES

[1] PAINT EXISTING WOOD TRIM, SEMI-GLOSS, (PT-A).

[2] PROVIDE LATCH GUARD AT EXTERIOR DOORS.

[3] PROVIDE DARK BRONZE ANODIZED OR BLACK ANODIZED HARDWARE AT EXISTING ALUMINUM DOORS TO MATCH.

[4] PROVIDE OCCUPANCY INDICATOR HARDWARE.

GENERAL NOTES

1. REFER TO COLORS AND MATERIALS SCHEDULE AND DOOR SCHEDULE FOR HARDWARE GROUPS.
2. REFER TO COLORS AND MATERIALS SCHEDULE FOR COLORS AND FINISHES.
3. REFER TO SHEET G040 FOR STANDARD ABBREVIATIONS LIST.
4. "PAINT" (PT) IS A GENERIC TERM USED IN DOCUMENTS. REFER TO COLORS AND MATERIALS SCHEDULE FOR SPECIFIC TYPE OF APPLIED FINISH. THE TERM "PAINT" REFERS TO PAINTS, STAINS, SEALERS AND OTHER APPLIED COATINGS.

DOOR HARDWARE GROUPS

HDW-1: PASSAGE HARDWARE.

HDW-2: PASSAGE HARDWARE WITH CLOSER.

HDW-3: LOCKING HARDWARE.

HDW-4: LOCKING HARDWARE WITH CLOSER.

HDW-5: SPECIAL SECURITY CONTROL HARDWARE.
LOCKING HARDWARE WITH CLOSER.
ELECTRONIC ACCESS CONTROL.

TYPICAL INTERIOR SINGLE SWINGING DOOR HARDWARE INCLUDES:

3	EA	BUTTS	
1	EA	LOCKSET OR PASSAGE SET	LEVER HANDLE
1	EA	CLOSER	AS INDICATED BY HARDWARE GROUP
1	EA	WALL STOP	
1	SET	DOOR SILENCERS	

CONFIRM ADDITIONAL DOOR HARDWARE WITH OWNER:

TYPICAL EXTERIOR SINGLE SWINGING DOOR HARDWARE INCLUDES:

3	EA	BUTTS	STAINLESS STEEL
1	EA	LOCKSET	LEVER HANDLE
1	EA	CLOSER	AS INDICATED BY HARDWARE GROUP
1	EA	WALL STOP	
1	SET	WEATHERSTRIPPING	
1	EA	THRESHOLD	

CONFIRM ADDITIONAL DOOR HARDWARE WITH OWNER:

GENERAL NOTES

1. SUPPLIER: FINISH HARDWARE SHALL BE SUPPLIED BY A FACTORY AUTHORIZED BUILDER'S HARDWARE DISTRIBUTOR FOR PRODUCTS AS SPECIFIED, OR APPROVED AND WHO HAS BEEN FURNISHING HARDWARE IN THE SAME AREA AS THE PROJECT FOR A PERIOD OF NOT LESS THAN TWO (2) YEARS. THE SUPPLIER'S ORGANIZATION SHALL INCLUDE A MEMBER OF THE AMERICAN SOCIETY OF ARCHITECTURAL HARDWARE CONSULTANTS WHO IS AVAILABLE AT ALL REASONABLE TIMES DURING THE COURSE OF WORK TO MEET WITH THE OWNER, ARCHITECT AND GENERAL CONTRACTOR FOR PROJECT HARDWARE CONSULTATION.
2. PROVIDE HARDWARE THAT MEETS OR EXCEEDS HANDICAP ACCESSIBILITY PER LOCAL BUILDING CODES. CONFORM TO THE AMERICANS WITH DISABILITIES ACT (ADA) ACCESSIBILITY GUIDELINES.
3. ALL FINISH HARDWARE SHALL COMPLY WITH APPLICABLE LOCAL AND CURRENT BUILDING CODES.
4. ITEMS NOT SPECIFICALLY MENTIONED BUT NECESSARY TO COMPLETE THE WORK SHALL BE FURNISHED, MATCHING THE ITEMS SPECIFIED IN QUALITY AND FINISH.
5. ALL HARDWARE IS TO BE ANSI/BHMA GRADE 1, UNLESS SPECIFIED OTHERWISE.
6. EXPOSED SURFACES OF ALL HARDWARE SHALL BE FINISHED AS STATED IN COLORS AND MATERIALS SCHEDULE, UNLESS OTHERWISE NOTED.
7. PROVIDE 2 KEYS PER LOCKSET AND A MASTER KEY FOR THE ENTIRE SUITE.

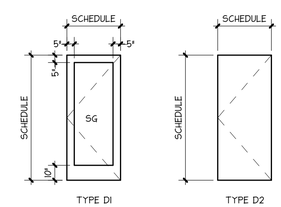

DOOR TYPES

1/4" = 1'-0"

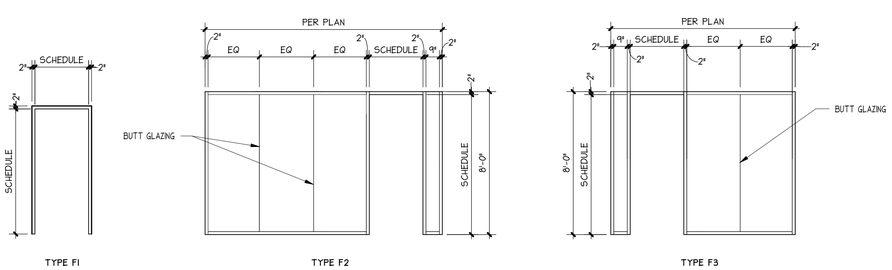

FRAME TYPES

1/4" = 1'-0"

ROOM FINISH SCHEDULE

		FLOOR			CEILING		WALL		
NO	ROOM NAME	MATERIAL	FINISH	BASE	MATERIAL	FINISH	MATERIAL	FINISH	NOTES
101	SIGN ROOM #1	CONC (E)	CPT	RB	ACT (E)	-	GWB(E)/GWB/ALUM	PT/FF	
102	SIGN ROOM #2	CONC (E)	CPT	RB	ACT (E)	-	GWB(E)/GWB/ALUM	PT/FF	
103	RECEPTION	CONC (E)	LVP	RB	ACT (E)/GWB/GWB(E)	-/PT	GWB(E)/GWB	PT/WC	
104	TOILET	CONC (E)	SV	CB	ACT (E)	-	GWB(E)	PT/PLAM [1]	
105	SUPPLY	CONC (E)	SV	RB	ACT (E)	-	GWB(E)	PT	
106	TRAINING	CONC (E)	CPT/LVP	RB	GWB (E)	PT	GWB(E)/GWB	PT	
107	TOILET	CONC (E)	SV	CB	GWB (E)	PT	GWB(E)	PT/PLAM [1]	
108	UTILITY	CONC (E)	SV	RB	GWB (E)	PT	GWB(E)	PT	
109	HALL	CONC (E)	LVP	RB	ACT (E)/GWB(E)	-/PT	GWB(E)/GWB	PT	
110	JAN.	CONC (E)	SV	RB	GWB (E)	PT	GWB(E)	PT	
111	TOILET	CONC (E)	SV	CB	GWB (E)	PT	GWB(E)	PT/PLAM [1]	
112	TOILET	CONC (E)	SV	CB	GWB (E)	PT	GWB(E)	PT/PLAM [1]	
113	BREAK	CONC (E)	LVP	RB	GWB (E)	PT	GWB(E)	PT	
114	DATA	CONC (E)	SV	RB	ACT(E)/GWB(E)	-/PT	GWB(E)	PT	
115	WORK	CONC (E)	LVP	RB	GWB(E)	PT	GWB(E)	PT	
116	OPEN WORK	CONC (E)	CPT	RB	ACT (E)/GWB(E)	-/PT	GWB(E)	PT	
117	OFFICE #1	CONC (E)	CPT	RB	GWB (E)	PT	GWB(E)	PT	
118	COPY	CONC (E)	LVP	RB	ACT (E)	-	GWB(E)	PT	
119	OFFICE #2	CONC (E)	CPT	RB	GWB (E)	PT	GWB(E)	PT	
120	OFFICE #3	CONC (E)	CPT	RB	GWB (E)	PT	GWB(E)	PT	
121	OFFICE #4	CONC (E)	CPT	RB	GWB (E)	PT	GWB(E)	PT	
122	OFFICE #5	CONC (E)	CPT	RB	GWB (E)	PT	GWB(E)	PT	
123	OFFICE #6	CONC (E)	CPT	RB	GWB (E)	PT	GWB(E)	PT	
124	OFFICE #7	CONC (E)	CPT	RB	GWB (E)	PT	GWB(E)	PT	
125	VESTIBULE	CONC (E)	CPT	RB	WD (E)	PT	WD (E)	PT	
126	OPEN AREA	CONC (E)	LVP	RB	GWB(E)	PT	GWB(E)/GWB	PT	

SCHEDULE NOTES

[1] PLASTIC LAMINATE WAINSCOT AT 60" A.F.F. ON TWO WALLS. PAINTED ABOVE, (PT-A).

GENERAL NOTES

1. REFER TO COLORS AND MATERIALS SCHEDULE FOR COLORS AND FINISHES.
2. "PAINT" (PT) IS A GENERIC TERM USED IN DOCUMENTS. REFER TO COLORS AND MATERIALS SCHEDULE FOR SPECIFIC TYPE OF APPLIED FINISH. THE TERM "PAINT" REFERS TO PAINTS, STAINS, SEALERS AND OTHER APPLIED COATINGS.
3. PAINT ALL EXPOSED CONDUITS AND PIPES; MATCH COLOR OF ADJACENT MATERIAL.
4. PAINT ALL EXPOSED SHEET METAL (GALVANIZED STEEL) HVAC DUCTS. CONFIRM COLOR WITH TENANT.

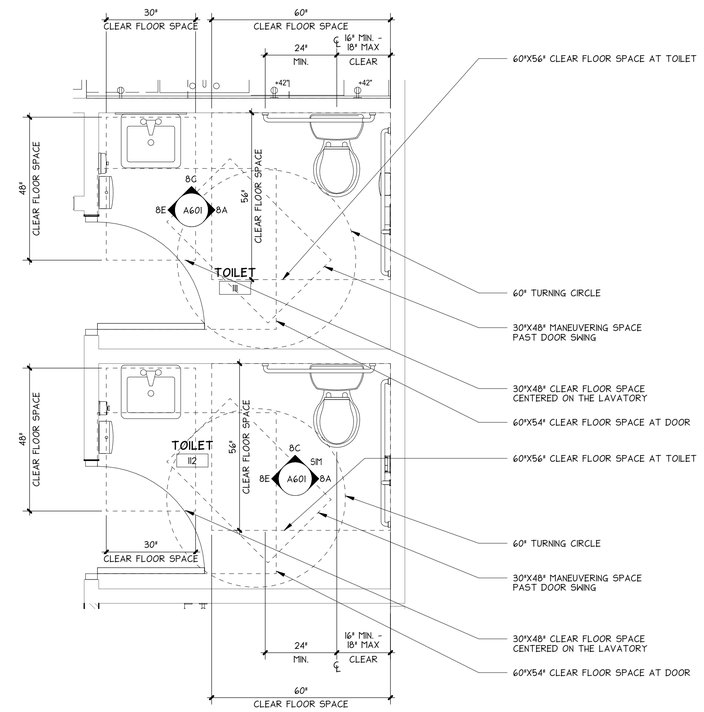

ENLARGED PLAN - TOILET 111 AND TOILET 112

1/2" = 1'-0"

NORTH

SCALE: 1/2" = 1'-0"

B-21-0583
CITY OF PUYALLUP

Helix design group

AMERICAN INSTITUTE OF ARCHITECTS

6934 REGISTERED ARCHITECT LOWELL CATE STATE OF WASHINGTON

HELIX DESIGN GROUP, INC

SCHEDULES, ENLARGED PLAN

STEWART TITLE PLAZA 512 BUILDING
TENANT IMPROVEMENT
PUYALLUP, WASHINGTON

REVISION	DATE

DATE	JOB NO.
07.27.21	i21-031

PERMIT SET

A200

WHITE

DRAWING NO.

© HELIX DESIGN GROUP, INC.: All rights reserved. No part of this document may be reproduced in any form or by any means without permission in writing from Helix Design Group.

PLOTTED: 7/27/2021 1:43:31 PM PROJECT: i21-031 - STEWART TITLE
FILE PATH: C:\Users\JessicaC\Desktop\Revit 2020 Projects\i21-031-A-TI(R20) Stewart Title Office_JessicaC.rvt

A. 34"
B. 24"
C. 30"
D. 4"
E. 1 1/2"
F. 4"
G. 12"
H. STANDARD: 25"
J. 1 1/2"
K. 88"
L. 4"
M. 27" MINIMUM
N. STANDARD: 24"

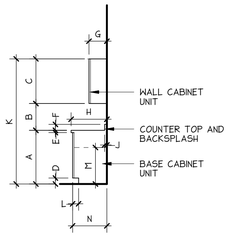

SECTION

A. NOT USED
B. TOP KNEE SPACE: 8" MINIMUM
C. BOTTOM KNEE SPACE: 11" MINIMUM
D. BOTTOM CABINET WIDTH WITH VENT HOLES: 6"
E. CABINET FRONT: 5"
F. CABINET HEIGHT: 34"
G. KNEE SPACE HEIGHT: 27" MINIMUM
H. SPACE AT TOE: 4"

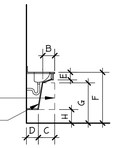

SECTION

3A STANDARD CABINETS
1/4" = 1'-0"

3C ACCESSIBLE VANITY
1/4" = 1'-0"

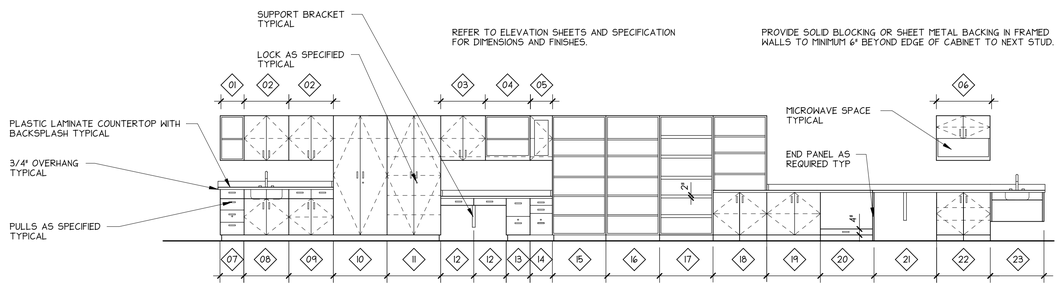

FRONT VIEW

TYPICAL CABINET LEGEND NOTES

01 OPEN WALL CABINET WITH ADJUSTABLE SHELVING.
02 WALL CABINET WITH DOORS AND ADJUSTABLE SHELVING.
03 WALL CABINET WITH DOORS ADJUSTABLE SHELVING AND INTEGRAL LIGHT VALANCE.
04 OPEN WALL CABINET WITH ADJUSTABLE SHELVING AND INTEGRAL LIGHT VALANCE.
05 WALL CABINET WITH GLASS PANEL DOORS, ADJUSTABLE SHELVING AND INTEGRAL LIGHT VALANCE.
06 WALL CABINET WITH DOORS AND ADJUSTABLE SHELVING ABOVE. OPEN WALL CABINET FOR MICROWAVE AND INTEGRAL LIGHT VALANCE BELOW.
07 BASE CABINET WITH DRAWERS. LOCKING HARDWARE AS SPECIFIED.
08 BASE CABINET WITH SINK, APRON AND DOORS.
09 BASE CABINET WITH DRAWERS. ADJUSTABLE SHELVING AND DOORS.
10 FULL HEIGHT WARDROBE CABINET WITH ROD, SHELF AND DOORS. HARDWARE AS SPECIFIED.
11 FULL HEIGHT STORAGE CABINET WITH DOORS AND ADJUSTABLE SHELVING. LOCKING HARDWARE AS SPECIFIED.
12 PENCIL DRAWER SUSPENDED BELOW COUNTERTOP.
13 BASE CABINET WITH FILE DRAWERS. LOCKING HARDWARE AS SPECIFIED.
14 BASE CABINET (2) DRAWER AND FILE. LOCKING HARDWARE AS SPECIFIED.
15 FULL HEIGHT CABINET, OPEN WITH ADJUSTABLE SHELVES.
16 FULL HEIGHT CABINET, OPEN WITH FIXED SHELVES.
17 FULL HEIGHT CABINET OPEN WITH FIXED SHELVING AND LIGHT VALANCE AT EACH SHELF FRONT EDGE.
18 FULL HEIGHT CABINET OPEN WITH ADJUSTABLE GLASS SHELVING ABOVE, BASE CABINET WITH DOORS AND ADJUSTABLE SHELF.
19 BASE CABINET WITH ADJUSTABLE SHELVING AND DOORS.
20 OPEN BASE CABINET WITH EXTENDING ROLL OUT PRINTER SHELF.
21 COUNTERTOP AND BACKSPLASH WITH SUPPORT BRACKETS, OPEN BELOW. PROVIDE CONTINUOUS SUPPORT LEDGER BELOW COUNTERTOP ALONG WALLS.
22 BASE CABINET WITH ADJUSTABLE SHELVING (DOUBLE SHELVES) AND DOORS.
23 ACCESSIBLE VANITY WITH SINK.

5A STANDARD CABINET LEGEND
1/4" = 1'-0"

TYPICAL PLUMBING FIXTURE AND TOILET ROOM ACCESSORIES NOTES

PROVIDE SOLID BLOCKING OR SHEET METAL BACKING IN FRAMED WALLS TO MINIMUM 6" BEYOND EDGE OF ITEM TO THE NEXT STUD.

* NON-ADA RIM 14"-15"

A. KNEE CLEARANCE: 27"

A. MIRROR WIDTH (U.N.O. ON INTERIOR ELEVATION) INDIVIDUAL LAVATORY: 24" CONTINUOUS COUNTER FULL WIDTH OF COUNTER

* 35" MAX IF NOT OVER COUNTER OR LAVATORY

SINGLE L-SHAPED; 54"x42" GRAB BAR MAY BE PROVIDED INSTEAD OF SEPARATE BARS

WHEN MOUNTED AT A COUNTER, CLEANSING PRODUCT DISPENSERS AND DISPOSALS WILL BE LOCATED ON THE SIDE WALL OR COUNTERTOP. DISPENSERS AND DISPOSALS CANNOT BE MOUNTED ON THE BACK WALL, ABOVE THE COUNTER. THE REACH HEIGHT IS DETERMINED BY THE REACH DEPTH. SEE TABLE BELOW FOR REACH DEPTH AND REACH HEIGHTS.

A. MAX REACH DEPTH	0.5"	2"	5"	6"	9"	11"
B. MAX REACH HEIGHT	48"	46"	42"	40"	36"	34"

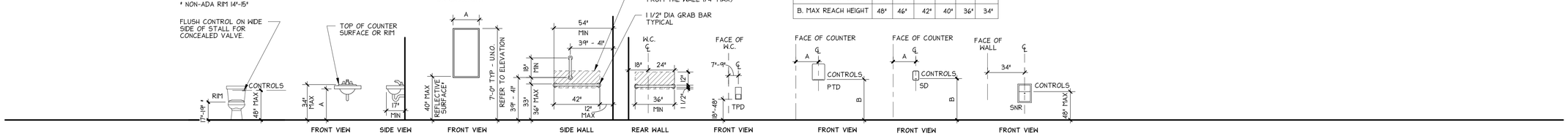

8A PLUMBING FIXTURE AND TOILET ACCESSORIES
1/4" = 1'-0"

B-21-0583
CITY OF PUYALLUP

Helix design group

AMERICAN INSTITUTE OF ARCHITECTS

8934 REGISTERED ARCHITECT LOWELL CATE STATE OF WASHINGTON

HELIX DESIGN GROUP, INC

STANDARD CASEWORK AND FIXTURES

STEWART TITLE PLAZA 512 BUILDING
TENANT IMPROVEMENT
PUYALLUP, WASHINGTON

REVISION	DATE

DATE	JOB NO.
07.27.21	i21-031

PERMIT SET

A600

WHITE

DRAWING NO.

©HELIX DESIGN GROUP, INC.: All rights reserved. No part of this document may be reproduced in any form or by any means without permission in writing from Helix Design Group.

PLOTTED: 7/27/2021 14:32 PM PROJECT: i21-031 - STEWART TITLE
FILE PATH: C:\Users\JessicaC\Desktop\Revit 2020 Projects\i21-031-A-TI(R20) Stewart Title Office_JessicaC.rvt

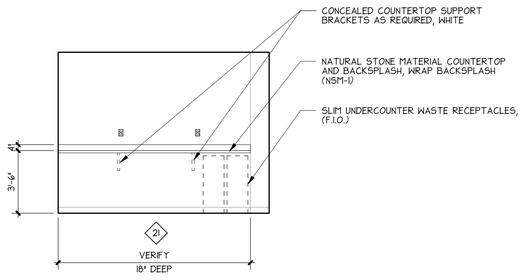

3A BREAK - 113
1/4" = 1'-0"

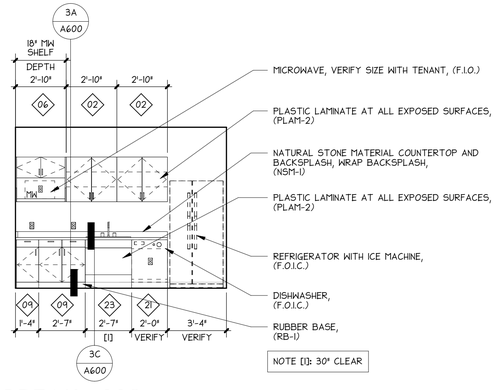

3D BREAK - 113
1/4" = 1'-0"

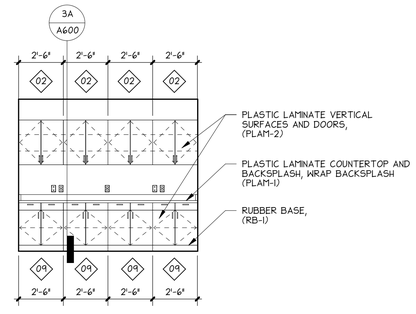

B-21-0583
CITY OF PUYALLUP

3F COPY - 118
1/4" = 1'-0"

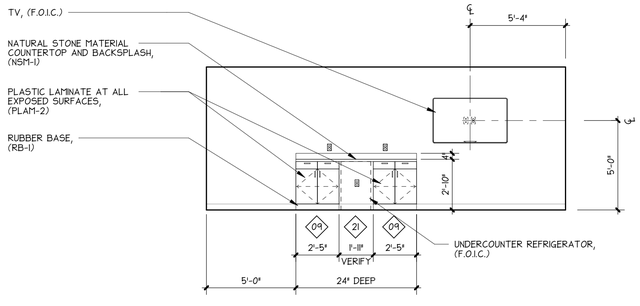

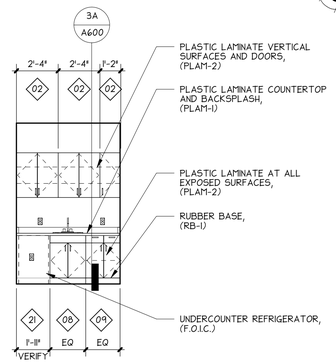

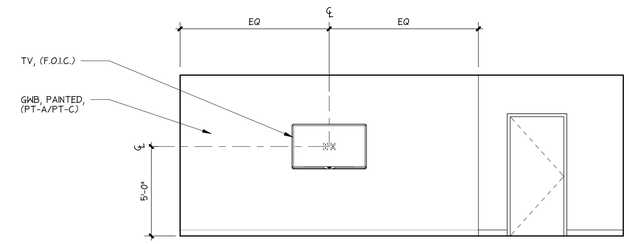

6A RECEPTION - 103
1/4" = 1'-0"

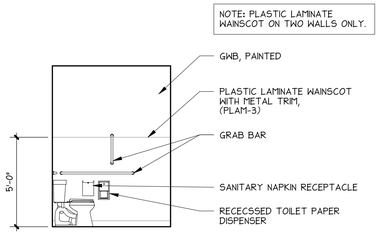

6D TRAINING - 106
1/4" = 1'-0"

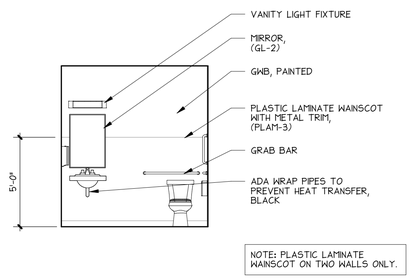

6G TRAINING - 106
1/4" = 1'-0"

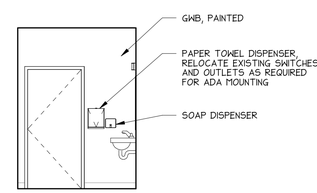

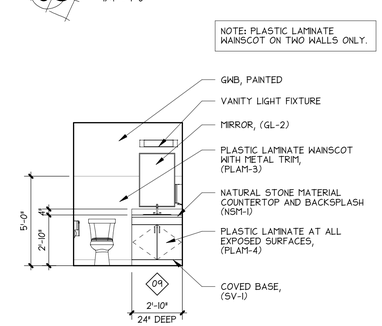

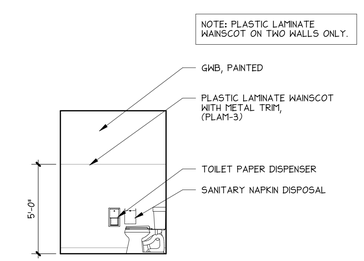

8A TOILET - 111
1/4" = 1'-0"

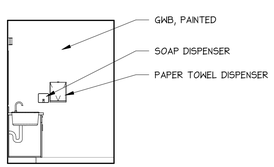

8C TOILET - 111
1/4" = 1'-0"

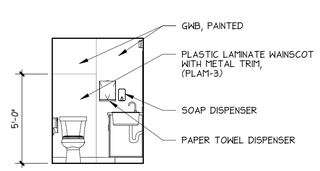

8E TOILET - 111
1/4" = 1'-0"

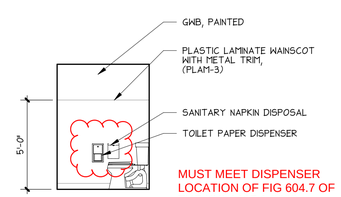

MUST MEET DISPENSER LOCATION OF FIG 604.7 OF THE ICC A117.1-2009

8G TOILET - 104
1/4" = 1'-0"

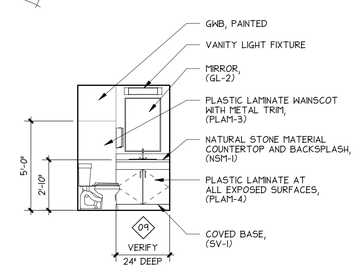

8J TOILET - 104
1/4" = 1'-0"

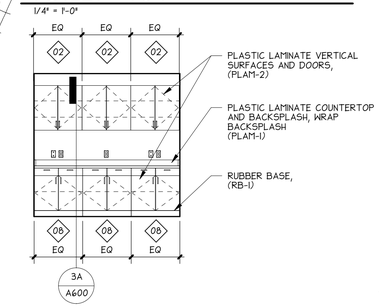

10A TOILET - 104
1/4" = 1'-0"

10C TOILET - 107
1/4" = 1'-0"

10E TOILET - 107
1/4" = 1'-0"

10G TOILET - 107
1/4" = 1'-0"

10J WORK - 115
1/4" = 1'-0"

Helix design group

AMERICAN INSTITUTE OF ARCHITECTS

8934 REGISTERED ARCHITECT LOWELL CATE STATE OF WASHINGTON

HELIX DESIGN GROUP, INC

INTERIOR ELEVATIONS

STEWART TITLE PLAZA 512 BUILDING
TENANT IMPROVEMENT
PUYALLUP, WASHINGTON

REVISION	DATE

DATE	JOB NO.
07.27.21	I21-031

PERMIT SET

A601

WHITE
DRAWING NO.

© HELIX DESIGN GROUP, INC.: All rights reserved. No part of this document may be reproduced in any form or by any means without permission in writing from Helix Design Group.

PLOTTED: 7/27/2021 11:14:34 PM PROJECT: I21-031 - STEWART TITLE
FILE PATH: C:\Users\JessicaC\Desktop\Revit 2020 Projects\I21-031-A-TI(R20) Stewart Title Office_JessicaC.rvt

COLD-FORMED STEEL FRAMING CONSTRUCTION:

THE INSTALLATION AND CONSTRUCTION OF COLD-FORMED NON-STRUCTURAL STEEL FRAMING, SHALL BE IN ACCORDANCE WITH THE STANDARD FOR COLD-FORMED STEEL FRAMING, GENERAL PROVISIONS, AMERICAN IRON AND STEEL INSTITUTE (AISI-GENERAL) AND AISI-NASPEC AND SHALL BE MANUFACTURED BY A MEMBER OF THE STEEL STUD MANUFACTURER'S ASSOCIATION (SSMA), OR PRE-APPROVED EQUAL, IN ACCORDANCE WITH SSMA ICC ER-4943P. ALL 54 MIL AND HEAVIER GALVANIZED MEMBERS SHALL BE FORMED FROM STEEL THAT MEETS THE REQUIREMENTS OF ASTM A-653, QUALITY SQ, GRADE 50, CLASS 1, FY=50 KSI. ALL 43 MIL AND LIGHTER GALVANIZED MEMBERS SHALL BE FORMED FROM STEEL THAT MEETS THE REQUIREMENTS OF ASTM A-653, QUALITY SQ, GRADE 33, FY=33 KSI. COLD-FORMED STEEL FRAMING MEMBERS SHALL MEET THE TYPE, SIZE, AND THICKNESS AS INDICATED IN THE ARCHITECTURAL DRAWINGS AND SPECIFICATIONS, AND SHALL CONFORM TO THE MINIMUM PRESCRIPTIVE REQUIREMENTS OF THE GYPSUM CONSTRUCTION HANDBOOK BY CGC, INC.

2A GENERAL NOTES

INTERIOR NON-BEARING WALL PENETRATION JAMB SCHEDULE 5
PSF LIVE LOAD

STUD SIZE & GA.	MAX. OPNG SIZE (FT)	MIN. NUMBER STUD(S) AT JAMB (1)	(2)	(3)	(4)
		HORIZ. DEFLECTION LIMIT OF WALL HT			
		l / 240	l / 240	l / 240	l / 240
		MAX. JAMB HT (FT)			
3625/25-33	3	12	16	-	-
	4	12	15	16	-
	6	10	13	15	16
	8	9	12	14	16
	10	-	12	13	15
	12	-	11	13	14
6005/25-33	3	12	16	-	-
	4	10	16	-	-
	6	-	15	16	-
	8	-	13	16	-
	10	-	11	15	16
	12	-	9	14	16
8005/25-33	3	-	-	-	-
	4	-	-	-	-
	6	16	-	-	-
	8	15	16	-	-
	10	14	16	-	-
	12	13	16	-	-

NOTES:

1. BOXED JAMB STUDS SHOWN. BACK-TO-BACK JAMB STUDS PERMITTED AT CONTRACTOR OPTION. FOR DETAIL SEE 10D/A751
2. FOR CONNECTION TO STRUCTURE ABOVE SEE -/---
3. FOR CONNECTION TO STRUCTURE BELOW SEE 10A/A751
4. HEADER AND STUDS SHALL BE CONTINUOUS - NO SPLICES ALLOWED.

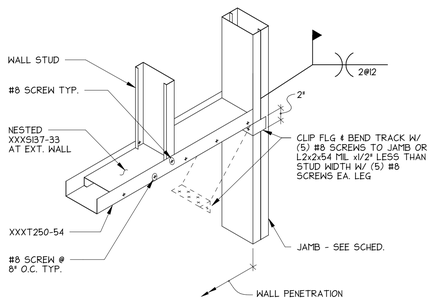

a **NESTED HEADER**
4'-0" MAX. PENETRATION SIZE (NOT ALLOWED AT DOORS)

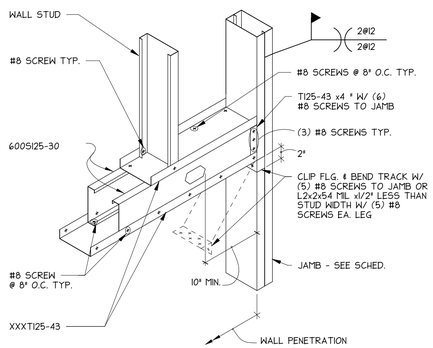

b **BOX HEADER**
12'-0" MAX. PENETRATION SIZE

10A DETAIL
NOT TO SCALE

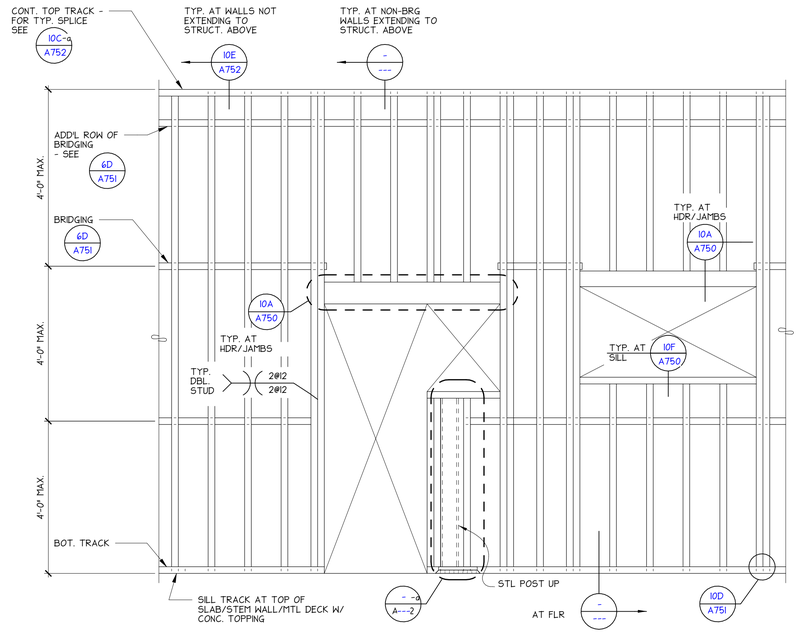

COLD-FORMED STUD WALL FRAMING NOTES:

1. ALL NON-BEARING WALL STUDS SHALL BE PER 1/A751 UNLESS NOTED OTHERWISE. FOR WALL TYPE AND PROPER LOCATION SEE ARCHITECTURAL DRAWINGS.
2. PROVIDE BRIDGING AT ALL NON-BEARING WALLS WITHOUT FULL HEIGHT QUALIFIED SHEATHING EITHER SIDE OF STUD PER 6D/A751 NOTE #1.
3. FOR TYPICAL CEILING FRAMING SCHEDULE AND DETAIL SEE 6A/A751
4. ALL WELDS SHALL BE 1/8" FILLET MAXIMUM. FOR MATERIALS THINNER THAN 0.15", EFFECTIVE THROAT SHALL NOT BE LESS THAN THINNEST MATERIAL. WELD IN ACCORDANCE WITH "STRUCTURAL WELDING CODE -- SHEET METAL" AWS D1.3.
5. STUD PUNCH-OUTS SHALL NOT BE SPACED LESS THAN 24" O.C. NOR WITHIN 10" CLEAR OF MEMBER END AT STUDS, HEADERS, BEAMS, JOISTS, ETC.
6. SCREWS SHALL BE THREAD-FORMING OR THREAD-CUTTING, WITH OR WITHOUT A SELF DRILLING POINT. SCREWS SHALL BE INSTALLED AND TIGHTENED IN ACCORDANCE WITH THE MANUFACTURER'S RECOMMENDATION. MINIMUM SPACING IS THREE SCREW DIAMETERS. A MINIMUM OF (3) THREADS SHALL BE ENGAGED.
7. FOR TYPICAL WALL CORNER REQUIREMENTS SEE 10C/A752

MILS/GAUGE SCHEDULE

MILS	MIN. THICKNESS	GAUGE
30	.0312	20
33	.0346	20
43	.0451	18
54	.0566	16
68	.0713	14
97	.1017	12

7F ELEVATION
NOT TO SCALE

NOTE:
SILL TRACK & STUD SHALL BE CONTINUOUS - NO SPLICES ALLOWED.

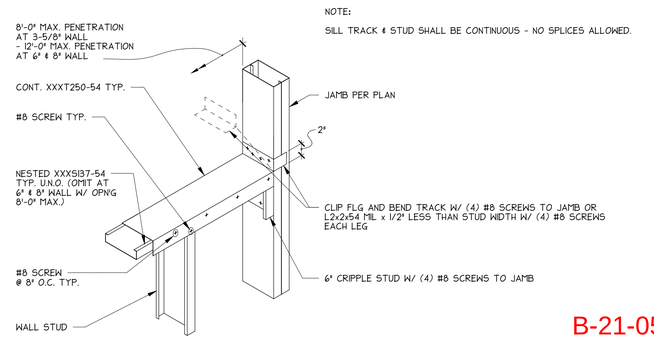

B-21-0583
CITY OF PUYALLUP

10F DETAIL
NOT TO SCALE

Helix design group

AMERICAN INSTITUTE OF ARCHITECTS

6934 REGISTERED ARCHITECT LOWELL CATE STATE OF WASHINGTON

HELIX DESIGN GROUP, INC

INTERIOR METAL FRAMING DETAILS

STEWART TITLE PLAZA 512 BUILDING
TENANT IMPROVEMENT
PUYALLUP, WASHINGTON

REVISION	DATE

DATE	JOB NO.
07.27.21	i21-031

PERMIT SET

A750

WHITE
DRAWING NO.

©HELIX DESIGN GROUP, INC.: All rights reserved. No part of this document may be reproduced in any form or by any means without permission in writing from Helix Design Group.

PLOTTED: 7/27/2021 1:44:35 PM PROJECT: i21-031 - STEWART TITLE
FILE PATH: C:\Users\Jessica\Desktop\Revit 2020 Projects\i21-031-A-TI(R20) Stewart Title Office_JessicaC.rvt

	STUD SIZE	STUD GA.			
REQ'D BRIDGING TYPE		18 MIL		33 MIL	
		STUD SPACING			
		24" O.C.	16" O.C.	24" O.C.	16" O.C.
		MAX. STUD HT ALLOWED			
4	162S125	7'-11"	8'-4"	8'-9"	9'-8"
	250S125	10'-7"	11'-3"	11'-7"	12'-10"
	362S125	13'-5"	14'-4"	14'-9"	16'-5"
	400S125	14'-2"	15'-4"	16'-5"	18'-4"
	600S125	16'-9"	19'-9"	21'-7"	24'-6"
REQ'D BRIDGING TYPE	STUD SIZE	STUD GA.			
		43 MIL		54 MIL	
		STUD SPACING			
		24" O.C.	16" O.C.	24" O.C.	16" O.C.
		MAX. STUD HT ALLOWED			
1 2, 3, OR 4	362S137	13'-10"	15'-11"	14'-10"	17'-0"
	362S162	14'-7"	16'-8"	15'-7"	17'-10"
	362S200	15'-4"	17'-7"	16'-6"	18'-10"
	600S137	20'-8"	23'-8"	22'-2"	25'-5"
	600S162	21'-7"	24'-9"	23'-2"	26'-6"
	600S200	22'-8"	26'-0"	24'-4"	27'-11"
1, 3, OR 4	800S137	26'-2"	30'-0"	28'-1"	32'-2"
	800S162	27'-3"	31'-2"	29'-3"	33'-6"
	800S200	28'-6"	32'-7"	30'-7"	35'-0"

NOTES:

1. FOR TYPICAL WALL STUD BRIDGING DETAIL SEE 6D/A751 -/---
2. INFORMATION SHOWN FOR S125 STUDS TAKEN FROM THE GYPSUM CONSTRUCTION HAND BOOK BY CGC INC. - INFORMATION SHOWN FOR ALL OTHER STUDS TAKEN FROM ICC ES LEGACY REPORT ER-4943P".
3. FOR CONNECTION TO STRUCTURE ABOVE SEE -/---
4. FOR CONNECTION TO STRUCTURE BELOW SEE 10A/A751

6A SCHEDULE

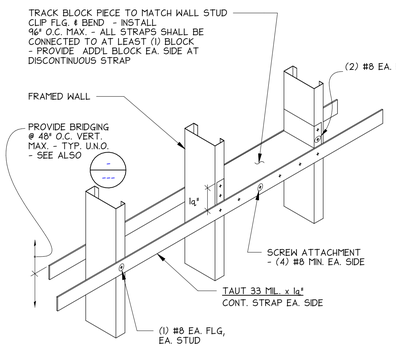

OPTION 1 - BRIDGING CONSISTS OF DBL. FLAT STRAP W/ BLK'G

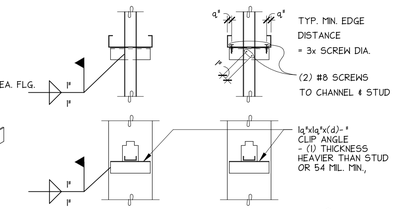

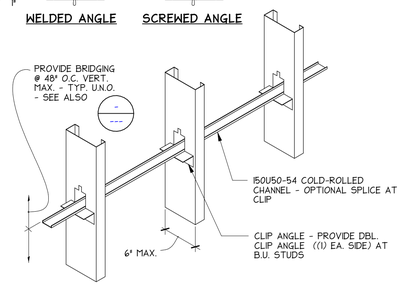

OPTION 2: BRIDGING CONSISTS OF COLD-ROLLED CHANNEL WITH CLIP ANGLE

(6" MAX. STUD SIZE)

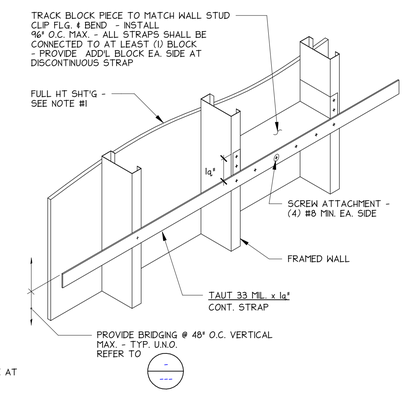

OPTION 3: BRIDGING ONE FACE CONSISTS OF SINGLE FLAT STRAP WITH BLOCK AND FULL HEIGHT SHEATHING OPPOSITE FACE

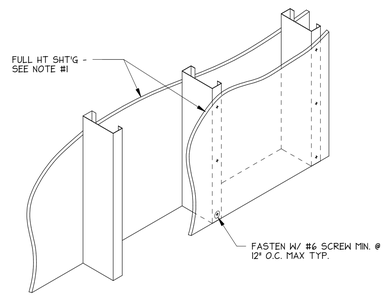

OPTION 4: FULL HT SHEATHING EACH FACE

NOTES:

1. QUALIFIED SHEATHING SHALL BE GWB, GYPSUM SHEATHING, PLYWOOD SHEATHING, OR O.S.B. ONLY AND SHALL OCCUR FULL HEIGHT. OF WALL.

6D DETAIL

1" = 1'-0"

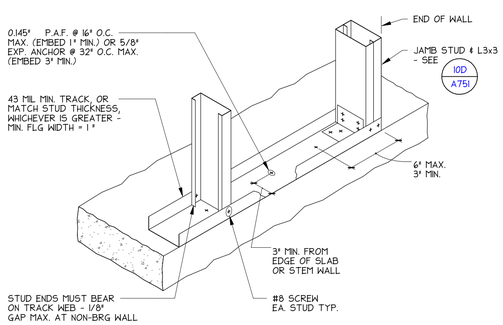

10A DETAIL

1" = 1'-0"

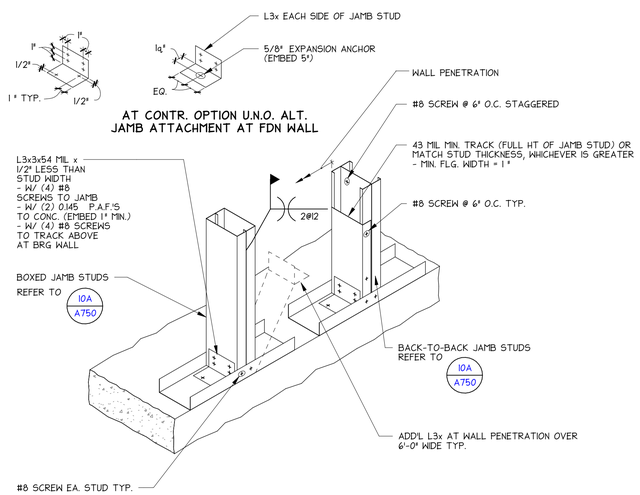

10D DETAIL

1" = 1'-0"

B-21-0583
CITY OF PUYALLUP

Helix design group

AMERICAN INSTITUTE OF ARCHITECTS

8934 REGISTERED ARCHITECT LOWELL CATE STATE OF WASHINGTON

HELIX DESIGN GROUP, INC

INTERIOR METAL FRAMING DETAILS

STEWART TITLE PLAZA 512 BUILDING
TENANT IMPROVEMENT
PUYALLUP, WASHINGTON

REVISION	DATE

DATE	JOB NO.
07.27.21	I21-031

PERMIT SET

A751

WHITE

DRAWING NO.

© HELIX DESIGN GROUP, INC.: All rights reserved. No part of this document may be reproduced in any form or by any means without permission in writing from Helix Design Group.

PLOTTED: 7/27/2021 11:41:36 PM PROJECT: I21-031 - STEWART TITLE
FILE PATH: C:\Users\JessicaC\Desktop\Revit 2020 Projects\I21-031-A-TI(R20) Stewart Title Office_JessicaC.rvt

B-21-0583
CITY OF PUYALLUP

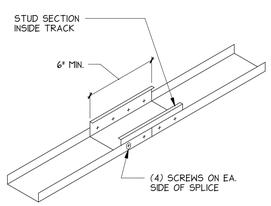

a TYPICAL BOTTOM/TOP TRACK SPLICE

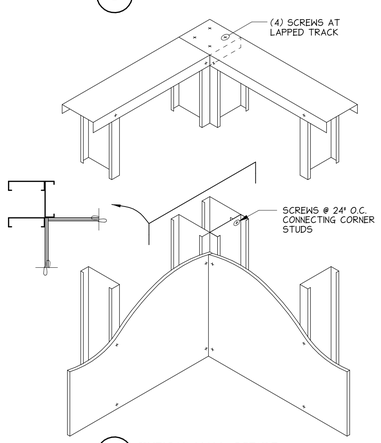

b TYPICAL WALL CORNER

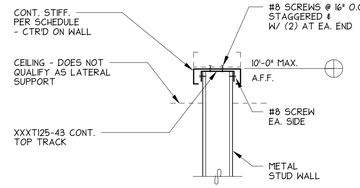

TOP OF WALL STIFFENER

TOP OF WALL STIFFENER SCHEDULE	
UNBRACED WALL LENGTH ℓu	STIFFENER MEMBER CONT.
< 10'	NONE REQ'D
10'-13'	600S137-33
13'-16'	(2) 600S137-33
16'-24'	(2) 800S137-43

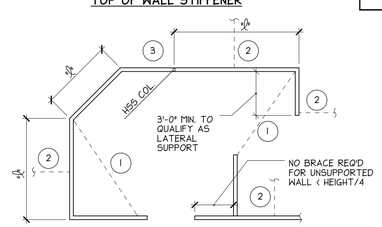

PLAN

NOTES:

1. THIS PLAN IS AN EXAMPLE ONLY. IT DOES NOT REPRESENT A SPECIFIC WALL.
2. "ℓu" INDICATES UNBRACED LENGTH OF WALLS, SEE SCHEDULE FOR TOP OF WALL STIFFENER SIZE.
3. AT CONTRACTORS OPTION, IN LIEU OF TOP OF WALL STIFFENER:
   - (1) INDICATES HORIZ. BRACE EXTENDING TO ADJACENT CORNER SEE -/---
   - (2) INDICATES BRACE UP TO STRUCTURE SEE 10H/A752
   - (3) INDICATES WALL BRACED AT HSS COLUMN
     - PROVIDE L2"x2"x 1/2" LESS THAN STUD WIDTH x54 MIL. W/ (4) #8 SCREWS TO TOP TRACK.
     - WELD CONN. ANGLE TO HSS COL. OR PROVIDE (4) 0.145" P.A.F.'S AT CONTRACTORS OPTION.
4. ALL TOP TRACK SPLICES SHALL BE AT BRACE LOCATIONS.

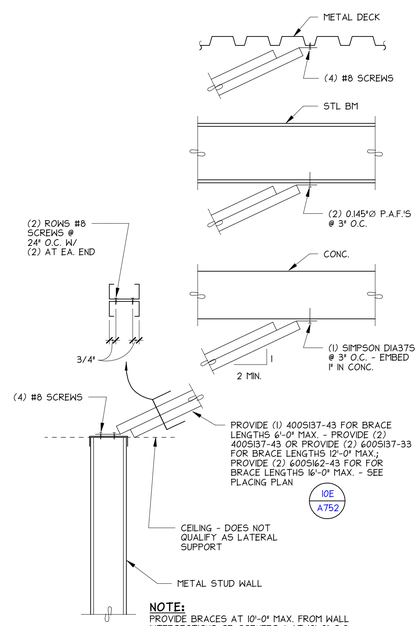

NOTE:
PROVIDE BRACES AT 10'-0" MAX. FROM WALL INTERSECTIONS OR CORNERS & AT 10'-0" O.C.

10C DETAIL
NOT TO SCALE

10E DETAIL
NOT TO SCALE

10H DETAIL
NOT TO SCALE

Helix design group

AMERICAN INSTITUTE OF ARCHITECTS

6934 REGISTERED ARCHITECT LOWELL CATE STATE OF WASHINGTON

HELIX DESIGN GROUP, INC

INTERIOR METAL FRAMING DETAILS

STEWART TITLE PLAZA 512 BUILDING
TENANT IMPROVEMENT
PUYALLUP, WASHINGTON

REVISION	DATE

DATE	JOB NO.
07.27.21	121-031

PERMIT SET

A752

WHITE
DRAWING NO.

© HELIX DESIGN GROUP, INC.: All rights reserved. No part of this document may be reproduced in any form or by any means without permission in writing from Helix Design Group.

PLOTTED: 7/27/2021 1:14:36 PM PROJECT: 121-031 - STEWART TITLE
FILE PATH: C:\Users\JessicaC\Desktop\Revit 2020 Projects\121-031-A-T(R20) Stewart Title Office_JessicaC.rvt

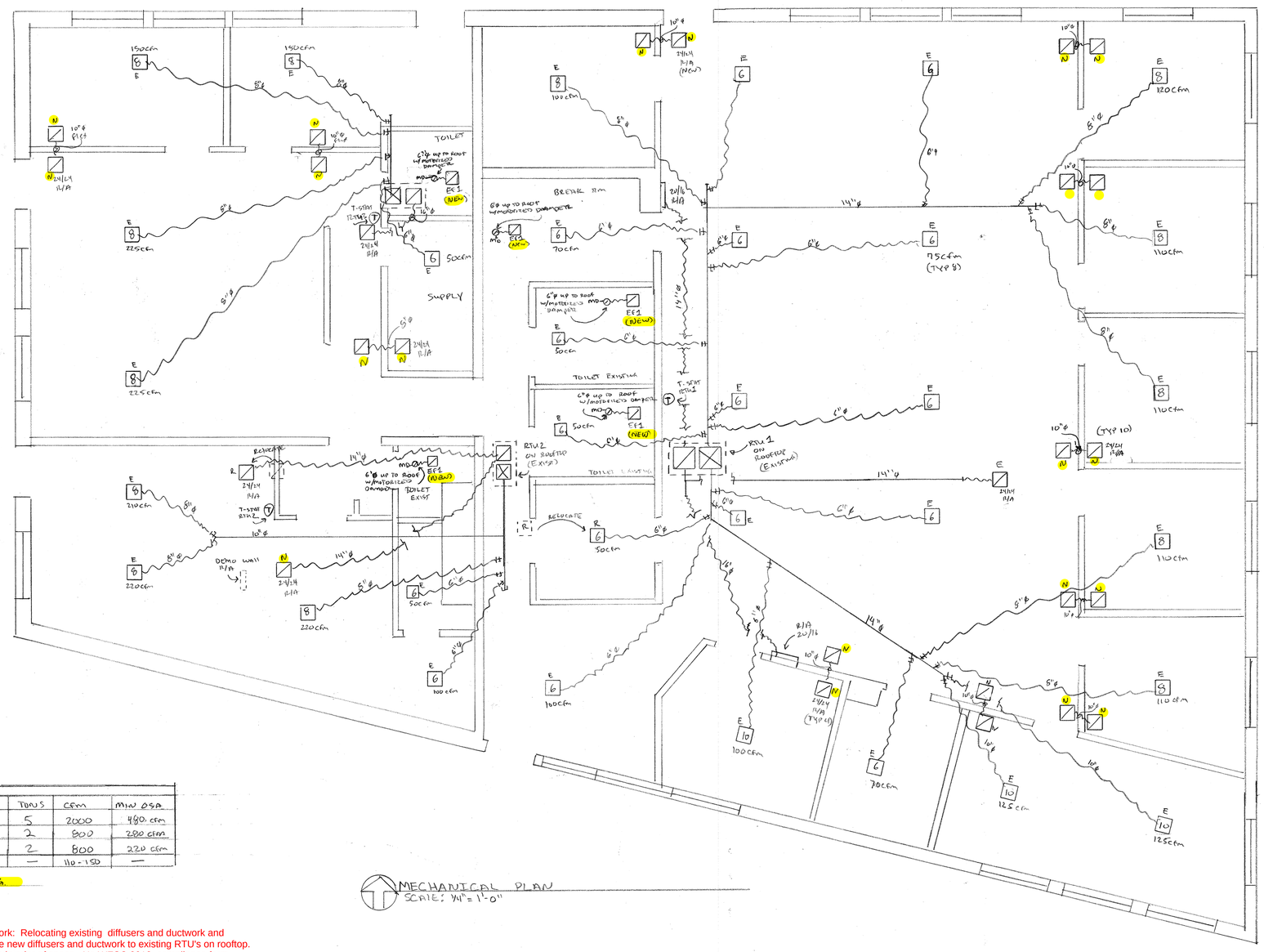

MECHANICAL PLAN
SCALE: 1/4" = 1'-0"

EQUIPMENT SCHEDULE:					
TAG	MAKE	MODEL	TONS	CFM	MIN OSA
RTU1	AMERICAN STANDARD	WCC060F	5	2000	480 CFM
RTU2	BRYANT	334060Z4	2	800	280 CFM
RTU3	CARRIER	50VT-C24	2	800	220 CFM
EF1	PANASONIC (NEW)	FV115VKL2	—	110-150	—

NOTE: ALL RTU'S EXISTING.

LEGEND:	
N	NEW
E	EXISTING
R	RELOCATE
MD	120V MOTORIZED DAMPER

Scope of Work: Relocating existing diffusers and ductwork and adding some new diffusers and ductwork to existing RTU's on rooftop. All work is in interior of space. No WESC 2018 compliance form required since units are not be altered and are existing.
Paul Joseph, Perfect Climate Inc

B-21-0583
CITY OF PUYALLUP

REVISIONS	BY

PLAZA 512 BLDG

STEWART

Date 7-14-21
Scale 1/4"
Drawn PJ
Job 1013
Sheet M1
Of Sheets

24 X 36 CLEARPRINT®

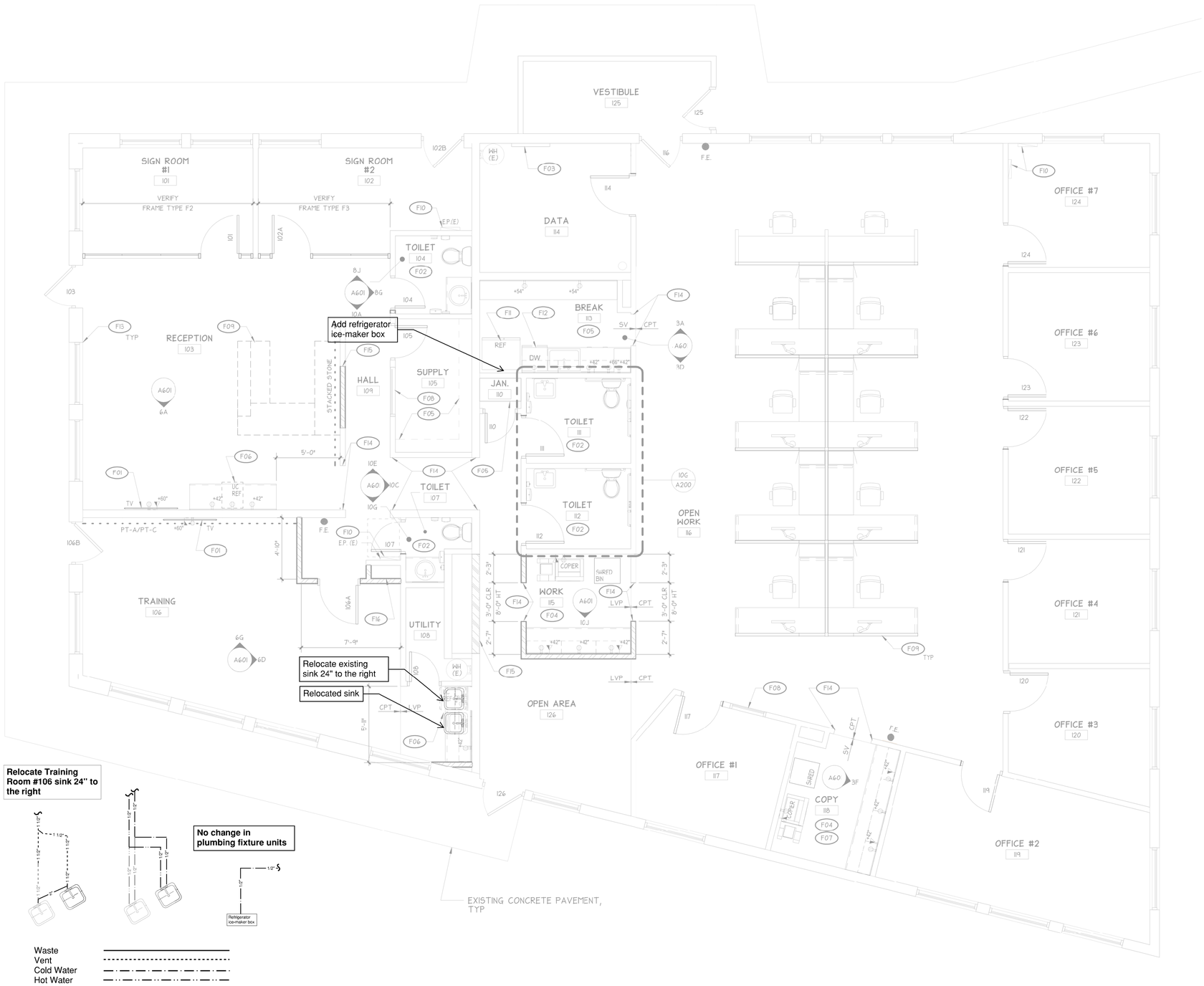

10C FLOOR PLAN
1/4" = 1'-0"

PERMIT SET

STEWART TITLE
507 31ST AVE SW
PUYALLUP, WA 98373

RADIANT
Plumbing & Heating, Inc
4516 S 8th St
Tacoma, WA 98404
253-548-6723
License# RADIAPH874OF

Sheet

P-1

Plumbing Plan

Permit Drawings
Date: 6/22/2021