EAST TOWN CROSSING | CLUBHOUSE

WITH MANAGER'S OFFICE & SWIMMING POOL

OFFICE & RESIDENCE

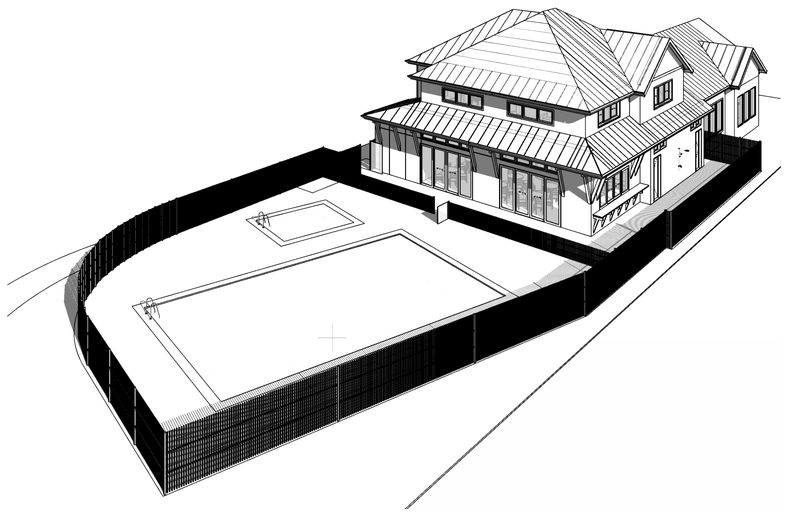

GENERAL PROJECT NOTES:

1. CONTRACTOR SHALL PERFORM ALL WORK WITHIN THIS SCOPE IN ACCORDANCE AND COMPLIANCE WITH ALL RELEVANT, CITY, COUNTY, STATE, AND/OR FEDERAL ORDINANCES, LAWS, REGULATIONS AND CODES. CONTRACTOR SHALL COMPLY WITH ALL REQUIREMENTS ESTABLISHED BY THE 2021 WASHINGTON STATE BUILDING CODE. 01
2. THE CONTRACTOR IS RESPONSIBLE FOR FAMILIARIZING HIMSELF WITH THE CONTENT OF THESE DRAWINGS PRIOR TO PROCEEDING WITH THE WORK. DO NOT SCALE THE DRAWINGS.
3. IN THE EVENT THE CONTRACTOR FINDS A CONFLICT OR DISCREPANCY WITH THESE DRAWINGS, THE ARCHITECT SHALL BE NOTIFIED IMMEDIATELY IN WRITING. SHOULD THE CONTRACTOR PROCEED WITHOUT NOTIFYING THE ARCHITECT OF SUCH CONFLICT, THE CONTRACTOR SHALL BE PROCEEDING AT HIS OWN RISK & ASSOCIATED LIABILITY.
4. THESE DRAWINGS SERVE TO REPRESENT DESIGN INTENT AS DIRECTED BY THE OWNER & COMPLIANT WITH GOVERNING JURISDICTIONAL LAW. IN NO WAY SHALL THESE DRAWINGS SERVE TO DICTATE METHODS OF CONSTRUCTION RELATIVE TO ADHERENCE TO EITHER. IT IS THE CONTRACTOR'S & OWNER'S RESPONSIBILITY TO WORK WITHIN THE PARAMETERS OF THE AGENCY APPROVED DOCUMENTS TO MAINTAIN THE INTEGRITY OF THE DESIGN INTENT AND AGENCY COMPLIANCE. ANY ERRORS, OMISSIONS OR NONCOMPLIANCE WITH GOVERNING CODES SHALL BE BROUGHT TO THE ATTENTION OF THE ARCHITECT IMMEDIATELY.
5. CONTRACTOR SHALL VERIFY ALL DIMENSIONS AND SITE CONDITIONS BEFORE STARTING WORK. THE ENGINEER SHALL BE NOTIFIED OF ANY DISCREPANCY. CHANGES, OMISSIONS OR SUBSTITUTIONS ARE NOT PERMITTED WITHOUT WRITTEN APPROVAL OF THE ENGINEER.
6. THE DESIGN, ADEQUACY AND SAFETY OF ERECTION BRACING, SHORING, TEMPORARY SUPPORTS, ETC., IS THE SOLE RESPONSIBILITY OF THE CONTRACTOR, AND HAS NOT BEEN CONSIDERED BY THE ENGINEER. THE CONTRACTOR IS RESPONSIBLE FOR THE STABILITY OF THE STRUCTURE PRIOR TO THE COMPLETION OF ALL SHEAR WALLS, ROOF AND FLOOR DIAPHRAGMS AND FINISHED MATERIALS. THE CONTRACTOR SHALL PROVIDE THE NECESSARY BRACING TO PROVIDE STABILITY PRIOR TO THE APPLICATION OF THE ABOVE MENTIONED COMPONENTS.
7. CONTRACTOR SHALL MAINTAIN THE JOBSITE IN A CLEAN AND PROFESSIONAL CONDITION. ANY DEBRIS GENERATED DURING CONSTRUCTION SHALL BE REMOVED FROM THE LOCAL JOBSITE CONTINUALLY. LOCAL JOBSITES SHALL BE LEFT IN A CLEAN AND NEAT CONDITION AT THE END OF EACH WORKDAY. DEBRIS REMOVAL FROM THE JOBSITE SHALL BE ONGOING. CONTRACTOR SHALL DISPOSE ALL MATERIALS AND DEBRIS IN A LEGAL MANNER. ALL PEDESTRIAN AND VEHICULAR ACCESS-WAYS SHALL BE MAINTAINED IN A CLEAN CONDITION THROUGHOUT THE PROJECT.
8. SPECIAL INSPECTION SHALL BE PROVIDED BY AND INDEPENDENT TESTING LABORATORY PER THE REQUIREMENTS OF IBC CHAPTER 17 AND THE LOCAL BUILDING OFFICIAL OR APPLICABLE JURISDICTION AND CONTRACT DOCUMENTS. THE SPECIAL INSPECTOR SHALL SUBMIT INSPECTION REPORTS AND A FINAL SIGNED REPORT TO THE BUILDING OFFICIAL FOR THE ITEMS LISTED IN THE QUALITY ASSURANCE/ SPECIAL INSPECTION SECTION:
9. THE CONTRACTOR SHALL VERIFY THE DIMENSIONS REQUIRED FOR ALL EQUIPMENT, APPLIANCES, FIXTURES, CABINETS, DUCTWORK AND OPENINGS BEFORE FRAMING BEGINS. THE CONTRACTOR SHALL COORDINATE WITH THE SUBCONTRACTORS OF ALL TRADES TO VERIFY THE SIZES ABD LOCATIONS OF OPENINGS THROUGH THE FLOORS, WALLS, CEILINGS AND ROOFS FOR DUCTS, PIPES, CONDUITS AND EQUIPMENT. THE CONTRACTOR SHALL COORDINATE THE LOCATION AND INSTALLATION OF WOOD BACKING, BLOCKING, FURRING AND STRIPPING AS REQUIRED FOR THE INSTALLATION AND ATTACHMENT OF WORK OF ALL TRADES.
10. THE CONTRACTOR SHALL BE RESPONSIBLE FOR THE SYSTEMS, INCLUDING, BUT NOT LIMITED TO, MECHANICAL, PLUMBING, ELECTRICAL WORK. WORK SHOWN IN THE DRAWINGS IS INTENDED TO ILLUSTRATE THE GENERAL DESIGN INTENT, SCOPE AND LOCATION OF WORK. ALL WORK NOT SPECIFICALLY DRAWN, BUT REQUIRED FOR A COMPLETE,LEGAL AND FUNCTIONING SYSTEM, SHALL BE PROVIDED AS PART OF THE WORK.

SYMBOL LEGEND

DETAIL SYMBOL
1 / A2.0 — DETAIL NO. OR LETTER / SHEET

SECTION SYMBOL
1 / A2.0 — DETAIL NO. OR LETTER / SHEET

INTERIOR ELEVATION SYMBOL
2 — SPECIFIC DETAIL NO.
A / A4.0 / 3 — DRAWING NUMBER / SHEET
4

DOOR I.D. SYMBOL
100A — DOOR NUMBER REFER TO SHEET A4.0.

ROOM I.D. SYMBOL
ROOM / 100 — ROOM NAME / ROOM NUMBER

WALL TYPE SYMBOL
1A — WALL TYPE NO. REFER TO SHEET AG1.1

FLOOR / CEILING / ROOF ASSEMBLY TYPE SYMBOL
Z-# — ASSEMBLY TYPE NO. REFER TO SHEET AG1.1 01

EXTERIOR WINDOW TYPE SYMBOL
— WINDOW TYPE LETTER

BUILDING REFERENCE NOTE SYMBOL
— WINDOW TYPE LETTER

TABLE OF CONTENTS

ARCHITECTURAL
AG1.0 COVER SHEET
AG1.1 PROJECT INFORMATION, ASSEMBLY TYPES
AS1.1 ENLARGED SITE PLAN
A1.0 FLOOR PLANS
A1.1 ENLARGED LEVEL 1 FLOOR PLAN & ROOF PLAN
A1.2 REFLECTED CEILING PLANS
A2.0 ELEVATIONS
A3.0 BUILDING SECTIONS
A3.1 BUILDING SECTIONS
A4.0 DOORS & WINDOWS
A4.1 DOOR CLEARANCE
A5.0 INTERIOR ELEVATIONS
A5.1 INTERIOR ELEVATIONS
A5.2 INTERIOR ELEVATIONS
A6.0 DETAILS
A6.1 DETAILS

STRUCTURAL
S1.0 STRUCTURAL NOTES
S3.1 FOUNDATION PLAN
S3.2 FRAMING PLAN
S3.3 FRAMING PLAN
S3.4 SHEAR WALLS
S4.1 DETAILS
S4.2 DETAILS
S4.3 DETAILS

MECHANICAL
M0.0 NOTES & LEGENDS
M0.1 SCHEDULES & CALCULATIONS
M0.2 LEVEL ONE PLAN
M0.3 LEVEL TWO PLAN
M0.4 LOAD CALCS & MECH. FORMS

PLUMBING
P0.00 NOTES & LEGENDS
P0.01 PLUMBING NOTES & TABLES
P0.02 PLUMBING CALCULATIONS
P0.03 PLUMBING SCHEDULES
P2.00 UNDERSLAB PLUMBING PLAN
P2.01 LEVEL 1 WASTE & VENT PLAN
P2.02 LEVEL 2 WASTE & VENT PLAN
P2.03 ROOF WASTE & VENT PLAN
P3.00 UNDERSLAB SUPPLY PLAN
P3.01 LEVEL 1 SUPPLY PLAN
P3.02 LEVEL 2 SUPPLY PLAN
P4.00 DETAILS
P4.01 DETAILS
P4.02 DETAILS 01

ELECTRICAL
E0.00 GENERAL NOTES
E0.01 PROJECT NOTES
E0.10 SITE PLAN
E1.01 LIGHTING PLAN - FIRST FLOOR
E1.02 LIGHTING PLAN - SECOND FLOOR
E1.03 LIGHTING PLAN - POOL
E1.10 PHOTOMETRIC PLAN - FIRST FLOOR
E1.11 PHOTOMETRIC PLAN - POOL
E1.50 LIGHTING NOTES & LUMINAIRE SCHEDULES
E3.01 POWER PLAN - FIRST FLOOR
E3.02 POWER PLAN - SECOND FLOOR
E6.00 ONE-LINE DIAGRAM & NOTES
E6.01 PANEL SCHEDULES
E8.00 LIGHTING COMPLIANCE FORMS

POOL
SP1 POOL PLAN
SP2 POOL PIPING PLAN
SP3 POOL DETAILS
SP4 POOL DETAILS
SP5 POOL DETAILS & NOTES
SP6 POOL STRUCTURAL DETAILS & NOTES

POOL
SP1 POOL PLAN
SP2 POOL PIPING PLAN
SP3 POOL DETAILS
SP4 POOL DETAILS
SP5 POOL DETAILS & NOTES
SP6 POOL STRUCTURAL DETAILS & NOTES

ADDITIONAL DOCUMENTS

ENERGY MODEL

DEFERRED SUBMITTAL

PRE-MFR ROOF TRUSSES
FIRE SPRINKLERS
FIRE ALARM

Swimming Pool to be Permitted Separately.

City of Puyallup Building REVIEWED FOR COMPLIANCE
BSnowden
07/29/2025
7:40:56 AM

The approved construction plans, documents, and all engineering must be posted on the job at all inspections in a visible and readily accessible location.

Full sized legible color plans are required to be provided by the permitee on site for inspection.

Approval of submitted plans is not an approval of omissions or oversights by this office or non compliance with any applicable regulations of local government. The contractor is responsible for making sure that the building complies with all applicable codes and regulations of the local government.

PROJECT TEAM

OWNER'S:
ASH DEVELOPMENT, LLC
PUYALLUP, WA
c/io: GREG HELLE
253-318-5711
greg.helle@absherco.com

ARCHITECT :
SYNTHESIS 9, LLC
TACOMA, WA
c/o: BRETT LINDSAY
253-468-4117
blindsay@synthesis9.com

CIVIL ENGINEER:
AHBL, INC.
TACOMA, WA
c/o: TODD SAWIN
253-383-2422
tsawin@AHBL.com

STRUCTURAL ENGINEER:
PIERUCCIONI E&C,, LLC
TACOMA, WA
c/o: CHON PIERUCCINI
206-949-7866
pieruccioniengineering@gmail.com

LANDSCAPE ARCHITECT:
LYON LANDSCAPE ARCHITECTS
c/: ERIC J. WILLIAMS
TACOMA, WA
253-678-4173
eric@lyonla.com

PLUMBING & MECHANICAL & LIGHTING
ROBISON ENGINEERING INC.
19401 40TH AVE. W. SUITE 302
LYNNWOOD, WA 98036
c/o: JON ROBISON
206-364-3343
jrobison@robisonengineering.com

FIRE SPRINKLERS
SPRINX FIRE PROTECTION, INC.
c/o: JOE FAULKNER
253-853-7780
joe@sprinxfire.com

POOL CONSULTANT
ENGINEERED CONSULTANTS NORTHWEST
c/o: JOE DOMINCZYK
253-952-7797
joe@ecnweng.com

VICINITY MAP (NOT TO SCALE)

N

SYNTHESIS 9, LLC
523 N. D ST.
TACOMA, WA 98403

REUSE OF DOCUMENTS
THIS DOCUMENT AND THE IDEAS AND DESIGNS INCORPORATED HERIN, AS INSTRUMENTS OF PROFESSIONAL SERVICE, ARE THE PROPERTY OF SYNTHESIS 9, LLC AND ARE NOT TO BE USED OR REPRODUCED IN WHOLE, OR IN PART WITHOUT THE WRITTEN AUTHORIZATION OF SYNTHESIS 9, LLC.

REGISTERED ARCHITECT 9251 BRETT A. LINDSAY STATE OF WASHINGTON

PRCNC20250692

City of Puyallup Development & Permitting Services ISSUED PERMIT
Building | Planning | Engineering | Public Works | Fire | Traffic

EAST TOWN CROSSING
CLUBHOUSE with MANAGER'S APARTMENT
3002 E Pioneer Way PUYALLUP WA 98372
P/N: 0420264053

AGENCY REVIEW | REVISION No.2 | 25.07.25

REVISIONS

01	RESPONSE TO 1st COMMENTS: 25/06/04	
02	RESPONSE TO 2nd COMMENTS: 25/07/21	

REVISIONS

DRAWN BY:	BL / CM
CHECKED BY:	BL
DATE:	25.07.25
TITLE:	COVER SHEET
PROJECT # :	2016
SHEET:	AG1.0

BUILDING CODE ANALYSIS

DESCRIPTION: 2 ROOM APARTMENT WITH LEASING OFFICE AND MISC. AMENITY SPACES

APPLICABLE BUILDING CODE: 2021 **WASHINGTON STATE BUILDING CODE**
FIRE SPRINKLERS: YES; PER IBC **903.3.1.1** NFPA
FIRE ALARM SYSTEM AND SMOKE ALARM: YES PER 2021 IBC, SECTION 907.2.11.2
OCCUPANCY: LEVEL 1 = A-3 / B
LEVEL 2 = R-3
TYPE OF CONSTRUCTION: VB (01)
NUMBER OF APARTMENT UNITS: 1
ACCESSIBLE UNITS REQUIRED: N/A
NON-SEPARATED USE: NO. PER SECTION 508.3.3, DWELLING UNITS MUST BE SEPARATED FROM OTHER OCCUPANCIES.

BASE ALLOWABLE BUILDING AREAS, HEIGHT AND STORIES:

ALLOWABLE AREA PER FLOOR:
LEVEL 1: B, NS = 9,000 sq ft
LEVEL 2: R-3, NS = UL

ALLOWABLE MAXIMUM HEIGHT:
B, NS = 40-FT
R, NS = 40-FT

ALLOWABLE STORIES:
B, NS = 2
R-3, NS = 3

**PER 303.1.2.1 SMALL ASSEMBLY SPACES, A ROOM OR SPACE USED FOR ASSEMBLY PURPOSES WITH AN OCCUPANT LOAD OF LESS THAT 50 PERSONS AND ACCESSORY TO ANOTHER OCCUPANCY SHALL BE CLASSIFIED AS A GROUP B OCCUPANCY OR AS PART OF THAT OCCUPANCY.

FIRE SEPARATION BETWEEN RESIDENCE AND OTHER USE: YES, PER 2021 IBC SECTION 420, 708 AND 711. (02)

SEPARATION WALLS: 1/2-HR FIRE PARTITION PER 708.3 2021 1BC, EXCEPTION FOR TYPE VB CONSTRUCTION WITH FIRE SPRINKLERS PER 903.3.1.1.
HORIZONTAL SEPARATION: 1/2-HR HORIZONTAL ASSEMBLY PER 711.3 2021 1BC, EXCEPTION FOR TYPE VB CONSTRUCTION WITH FIRE SPRINKLERS PER 903.3.1.1.

TOTAL PROPOSED GROSS AREA ALL LEVELS:

LEVEL 1 AMENITY & LEASING OFFICE :	3,430 sq ft
LEVEL 2 RESIDENCE:	1,547 sq ft
LEVEL 2 DECK:	159 sq ft
TOTAL:	5,136 sq ft

TOTAL PROPOSED NET AREA ALL LEVELS:

LEVEL 1 AMENITY & LEASING OFFICE :	3,254 sq ft
LEVEL 2 RESIDENCE:	1,346 sq ft
LEVEL 2 DECK:	143 sq ft
TOTAL:	4,743 sq ft

APARTMENT UNIT TO HAVE EMERGENCY ESCAPE AND RESCUE OPENINGS

SEE FLOOR PLANS FOR OCCUPANT LOADS BREAKDOWN.
LEVEL 1 OCCUPANT LOAD TOTAL = 87 (2 EXITS REQUIRED)
LEVEL 2 OCCUPANT LOAD = 8

PLUMBING FIXTURE ANALYSIS - LEVEL 1 ONLY

OCCUPANT LOAD	MALE WC	FEMALE WC	MALE LAV	FEMALE LAV
87 44 EACH	1 per 25 for first 50 and 1 per 50 for the remainder exceeding 50		1 per 40 for first 80 and 1 per 80 for remainder exceeding 80	
REQUIRED	2	2	2	2
PROVIDED	3	3	2	2

PLUMBING FIXTURE SUMMARY

2902.5.1 Drinking fountain number. Occupant loads over 30 shall have one drinking fountain for the first 150 occupants, then one per each additional 500 occupants.

ASSEMBLY NOTES

1. WALLS, PARTITIONS AND FLOOR/CEILING ASSEMBLIES ENCLOSING THE APARTMENT UNITS SHALL HAVE A SOUND TRANSMISSION CLASS (STC) OF NOT LESS THAT 50 FOR AIR-BORNE NOISE WHEN TESTED IN ACCORDANCE WITH ASTM E90. PENETRATIONS OR OPENINGS IN CONSTRUCTION ASSEMBLIES FOR PIPING, ELECTRICAL DEVICES, RECESSED CABINETS, BATHTUBS SOFFITS OR HEATING, VENTILATING OR EXHAUST DUCTS SHALL BE SEALED, LINED, INSULATED OR OTHERWISE TREATED TO MAINTAIN THE REQUIRED STC. UNIT ENTRY DOORS SHALL BE TIGHT-FITTING TO THE FRAME AND SILL.

2. NOT USED
3. NOT USED (01)

4. ELECTRICAL OUTLET BOXES SHALL NOT BE PLACED BACK-TO-BACK AND SHALL BE OFFSET BY NOT LESS THAN 12-INCHES FROM OUTLETS IN THE OPPOSITE WALL SURFACE. THE BACK AND THE SIDES OF BOXES SHALL BE SEALED WITH 1/8-INCH RESILIENT SEALANT AND BACKED BY AT LEAST 2-INCH THICK MATERIAL FIBER INSULATION PER IBC 1207.3.
5. SPACES OR SHAFTS CONTAINING VENTILATING EQUIPMENT OR OTHER MECHANICAL EQUIPMENT SHALL BE SEPARATED BOTH VERTICALLY AND HORIZONTALLY FROM THE ADJOINING DWELLING UNIT BY CONSTRUCTION DESIGNED TO PROVIDE A MINIMUM STC RATING OF 50.
6. DESIGN AND MATERIALS FOR SOUND TRANSMISSION CONTROL SHALL NOT IMPAIR THE FIRE-RESISTANT INTEGRITY OF SEPARATING WALLS OR FLOOR/CEILING ASSEMBLIES.
7. WRAP ALL PLUMBING PIPE WITH SOUND ATTENUATION BATTS.
8. ROOF ASSEMBLIES TO INCLUDE CLASS C ROOF COVERING THROUGHOUT AND FIRE-RETARDANT-TREATED WOOD SHEATHING FOR A DISTANCE OF 4 FEET OF THE EXTERIOR WALL.
9. IN GENERAL, THE CONTRACTOR SHALL REVIEW SECTION 1, GENERAL EXPLANATORY NOTES OF THE GYPSUM ASSOCIATION - 600 - 2021 FIRE RESISTANCE DESIGN MANUAL (19TH EDITION) OR LATER.
10. PER IBC 718.2.2 FIRE-BLOCKING SHALL BE PROVIDED IN ALL FURRED SPACES: VERTICALLY AT CEILING AND FLOOR LEVELS, AND HORIZONTALLY AT INTERVALS NOT EXCEEDING 10 FEET.
11. PER SECTION 1, GENERAL EXPLANATORY NOTE #22 OF THE GYPSUM ASSOCIATION - 600 - 2021 FIRE RESISTANCE DESIGN MANUAL (19TH EDITION) NOTE THE FOLLOWING:
WHEN NOT SPECIFIED AS A COMPONENT OF A FIRE-RESISTANCE RATED WALL OR PARTITION SYSTEM, WOOD STRUCTURAL PANELS SHALL BE PERMITTED TO BE ADDED TO ONE OR BOTH SIDES. SUCH PANELS SHALL BE PERMITTED TO BE APPLIED EITHER AS A BASE LAYER DIRECTLY TO THE FRAMING (UNDER THE GYPSUM BOARD), AS A FACE LAYER (OVER THE FACE LAYER OF GYPSUM BOARD), OR BETWEEN LAYERS OF GYPSUM BOARD IN MULTI-LAYER SYSTEMS. WHEN SUCH PANELS ARE APPLIED UNDER THE GYPSUM BOARD OR BETWEEN LAYERS OF GYPSUM BOARD, THE LENGTH OF THE FASTENERS SPECIFIED FOR THE ATTACHMENT OF THE GYPSUM BOARD APPLIED OVER THE WOOD STRUCTURAL PANELS SHALL BE INCREASED BY NOT LESS THAT THE THICKNESS OF THE WOOD STRUCTURAL PANELS. FASTENER SPACING FOR THE GYPSUM BOARD AND THE NUMBER OF LAYERS OF GYPSUM BOARD SHALL BE AS SPECIFIED IN THE SYSTEM DESCRIPTION.
12. PER SECTION 1, GENERAL EXPLANATORY NOTE #15 OF THE GYPSUM ASSOCIATION - 600 - 2021 FIRE RESISTANCE DESIGN MANUAL (19TH EDITION) NOTE THE FOLLOWING:
GREATER STUD SIZES (DEPTHS) SHALL BE PERMITTED TO BE USED IN METAL- OR WOOD-STUD SYSTEMS. METAL STUDS OF HEAVIER GAGE THAN THOSE TESTED SHALL BE PERMITTED, THE ASSIGNED RATING OF ANY LOAD-BEARING SYSTEM SHALL ALSO APPLY TO THE SAME SYSTEM USED A NON-LOAD-BEARING SYSTEM. INDICATED STUD SPACINGS ARE MAXIMUMS.

BUILDING ENVELOPE REQUIREMENTS

ZONE	4C - MARINE
PATH	TOTAL BUILDING PERFORMANCE **REFER TO BUILDING ENERGY MODEL IN SEPARATE SUBMITTAL
ROOFS - ATTIC AND OTHER	R-VALUE = 38
OPAQUE FENESTRATION	U-VALUE = 0.30
FIXED WINDIW FENESTRATION	U-VALUE = 0.57 OVERALL SHGC-VALUE = 0.38 OVERALL
SKYLIGHTS	U-FACTOR = N/A
WOOD FRAMED WALLS	R-VALUE = 21 INT
MASS WALL R-VALUE	N/A
FLOOR	N/A
PERIMTER SLAB, R-VALUE & DEPTH	10/ 2-FT

APPLICABLE 2021 WSEC BUILDING ENVELOPE NOTES :
1. AN IDENTIFICATION MARK SHALL BE APPLIED TO ALL INSULATION MATERIALS PER C303.1.
2. ALL FENESTRATION PRODUCTS SHALL BE LABELED WITH RATED U-FACTOR, SHGC, VT, LEAKAGE RATING PER C303.1.3 AND C402.4.3.

FIRE DEPARTMENT REQUIREMENTS

1. THE FIRE SPRINKLER SYSTEM SHALL BE MONITORED BY A CENTRAL STATION SERVICE APPROVED BY THE CITY OF PUYALLUP FIRE DEPARTMENT
2. THE OWNER SHALL BE RESPONSIBLE FOR PROVIDING A FIRE EMERGENCY GUIDE. THIS GUIDE SHALL DESCRIBE THE LOCATION, FUNCTION AND USE OF FIRE PROTECTION EQUIPMENT AND APPLIANCES ACCESSIBLE TO RESIDENTS, INCLUDING THE FIRE ALARM SYSTEMS, SMOKE ALARMS AND PORTABLE FIRE EXTINGUISHERS. THE GUIDE SHALL ALSO INCLUDE AN EMERGENCY EVACUATION PLAN FOR EACH DWELLING UNIT. THE EMERGENCY GUIDE SHALL BE REVIED AND APPROVED BY THE FIRE CODE OFFICIAL. A COPY OF THE EMERGENCY GUIDE SHALL BE GIVEN TO EACH TENANT PRIOR TO INTIAL OCCUPANCY.
3. FIRE EXTINGUISHERS WITH A MINIMUM 2-A RATING SHALL BE LOCATED WHERE SHOWN ON PLANS, AND SUCH THAT NO AREA IN THE BUILDING IS MORE THAN 75-FT TRAVEL DISTANCE FROM A FIRE EXTINGUISHER. THE FIRE EXTINGUISHERS SHALL BE LOCATED IN CONSPICUOUS LOCATIONS ALONG NORMAL PATHS OF TRAVEL AND SHALL NOT BE OBSTRUCTED OR OBSCURED FORM VIEW,
4. SMOKE ALARMS SHALL BE INSTALLED IN THE FOLLOWING LOCATIONS; IN THE CEILING OR WALL OUTSIDE OF EACH SEPARATE SLEEPING AREA IN THE IMMEDIATE VICINITY OF BEDROOMS, IN EACH ROOM USED FOR SLEEPING PURPOSES. SMOKE ALARMS WITHIN INDIVIDUAL DWELLING UNITS SHALL BE INTERCONNECTED SUCH THAT THE ACTIVATION OF ONE ALARM WILL ACTIVATE ALL THE ALARMS IN THE INDIVIDUAL UNIT.
5. Provide premises identification (address numbers) in accordance with IFC Section 505. Numbers shall be plainly visible and legible from the Street. Numerals shall be provided (not spelled out). Numbers shall contrast with their background and have a minimum height of 4 inches.
6. A separate permit is required from the PUYALLUP Fire Department for the installation of a fire alarm system. This submittal has not been reviewed in detail for fire alarm system compliance. Design shall comply with the IFC and NFPA 72. Central Station monitoring of the sprinkler and alarm systems is required. Contractor must hold a City of PUYALLUP fire protection license.
7. A separate permit is required from the PUYALLUP Fire Department for the installation of an automatic fire sprinkler system. This submittal has not been reviewed in detail for fire sprinkler system compliance. Design shall comply with the IFC and NFPA 13R. Contractor must hold a City of Tacoma fire protection license as well as be licensed with the State of Washington as a fire sprinkler contractor.
8. Single or multiple-station smoke alarms shall be installed in accordance with IFC Section 907.2.11. Smoke alarms shall be located within each sleeping room/area and directly outside of each sleeping room/area. A minimum of one smoke alarm shall be located on each level of each dwelling. Smoke alarms shall comply with UL 217 and NFPA 72. Smoke alarms shall be interconnected as required and shall receive their primary power from the building wiring and shall be equipped with battery backup as required.
9. Provide carbon monoxide alarms in accordance with IFC Section 915. Carbon monoxide alarms shall be installed outside of each separate sleeping area in the immediate vicinity of the bedrooms. A minimum of one carbon monoxide alarm shall be located on each level of each dwelling. The carbon monoxide alarms shall be listed as complying with UL 2034 and be installed and maintained in accordance with NFPA 720 and the manufacturer's instructions.

WALL TYPE & RATED ASSEMBLY NOTES:

GA FILE NO. WP 3240	PROPRIETARY*	1 HOUR FIRE	50 to 54 FSTC SOUND

GYPSUM PANELS, RESILIENT CHANNELS, MINERAL FIBER INSULATION, WOOD STUDS

Fire Design:
Resilient channels 24” o.c. attached at right angles to ONE SIDE of 2 x 4 wood studs 16” or 24” o.c. with 1-1/4” Type S screws. **One** layer 5/8” proprietary type X gypsum panel or gypsum veneer base applied parallel to channels with 1” Type S screws 12” o.c. End joints backblocked with resilient channels. 3” mineral fiber insulation, 2.0 pcf, in stud space.
OPPOSITE SIDE: **One** layer 5/8” proprietary type X gypsum panel or gypsum veneer base applied at right angles to studs with 1-1/4” Type W screws 12” o.c.
Vertical joints staggered 48” on OPPOSITE SIDES. **(LOAD-BEARING)**

Sound Design:
Sound tested with studs 16” o.c. and open face of mineral fiber insulation blankets toward resilient channel-side of stud space.

PROPRIETARY GYPSUM PANEL

United States Gypsum Company................................5/8” Sheetrock® Brand Firecode® C Gypsum Panels

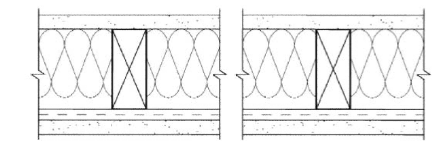

Thickness: 5-1/4” (Fire and Sound)
Approx. Weight: 7 psf (Fire and Sound)
Fire Test: UL R1319-93, 94, 129; 8-10-66; UL Design U311; ULC Design U311
Field Sound Test: BBN 760903, 9-17-76

GA FILE NO. FC 5109	PROPRIETARY	1 HOUR FIRE	55 to 59 STC SOUND

WOOD JOISTS, WOOD STRUCTURAL PANELS, GYPSUM TOPPING, RESILIENT CHANNELS, INSULATION, GYPSUM PANELS

Fire Design:
One layer 5/8″ proprietary type X gypsum panel applied at right angles to resilient channels 24″ o.c. (16″ o.c. when batt insulation is used; 12″ o.c. when loose fill insulation is used) with 1″ Type S screws 12″ o.c. Gypsum panel end joints located midway between continuous channels and attached with 8″ screws to additional pieces of channel 60″ long located 3″ back on either side of end joint. Resilient channels applied at right angles to 2 × 10 wood joists spaced a maximum of 24″ o.c. with 1-1/4″ Type S screws. Glass or mineral fiber batt insulation stapled to subfloor or loose fill insulation applied directly over gypsum panel. Wood joists supporting 15/32″ wood structural panel subfloor applied at right angles to joists with construction adhesive and 6d ring shank nails 12″ o.c. Minimum 1/2″ proprietary gypsum floor topping applied over subfloor.

Sound Design:
STC and IIC rated with both joists and resilient channels spaced 16″ o.c., 3-1/2″ glass fiber insulation in joist spaces, 3/4″ proprietary gypsum floor topping poured over 1/4″ proprietary sound reduction mat, and with finish flooring of C&P, sheet vinyl, and engineered wood laminate.

PROPRIETARY GYPSUM COMPONENTS

United States Gypsum Company
– 5/8″ Sheetrock® Brand Firecode® C Panels
– Levelrock® Brand Floor Underlayment

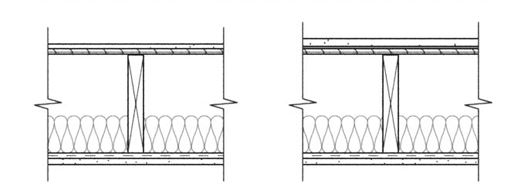

Approx. Ceiling Weight: 2.5 psf (Fire and Sound)
Fire Test: UL R1319, 05NK04589, 2-4-05, UL R1319, 05NK09496, 3-31-05, UL Design L569
Sound Test: RAL TL04-97 & 98, 4-22-04, RAL TL04-99, - 100, -101, 4-26-04, RAL TL04-109, 4-30-04
IIC & Test: (73 generic C&P), RAL IN04-010, 4-22-04, (52 cushion sheet vinyl) RAL IN04-011, 4-22-04, (51 engineered wood laminate) RAL IN04-012, 4-26-04, (50 cushion sheet vinyl) RAL IN04-013, 4-26-04, (48 generic sheet vinyl) RAL IN04-014, 4-26-04, (45 cushion sheet vinyl & channels spaced 24″ o.c.) RAL IN04-015, 4-30-04

WALL ASSEMBLIES

A

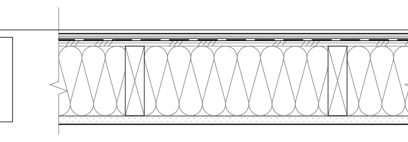

EXTERIOR WALL
CLADDING
WATER RESISTANT BARRIER
-TYVEK COMMERCIAL OR APPROVED
SHEATHING, PER STRUCTURAL
2 X 6 WOOD STUDS @ 16" O.C.
-R-21 BATT INSULATION
5/8" GWB (W.R. @ WET AREAS)
VAPOR BARRIER PAINT

A1

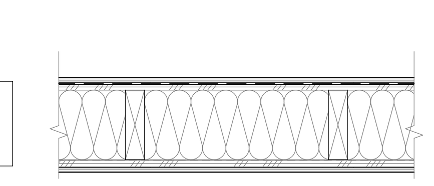

EXTERIOR WALL
CLADDING
WATER RESISTANT BARRIER
-TYVEK COMMERCIAL OR APPROVED
SHEATHING, PER STRUCTURAL
2 X 6 WOOD STUDS @ 16" O.C.
-R-21 BATT INSULATION
SHEATHING, PER STRUCTURAL
WATER RESISTANT BARRIER
-TYVEK COMMERCIAL OR APPROVED
CLADDING

B

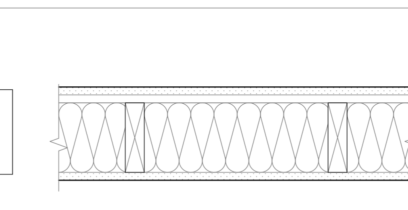

INTERIOR, 1-HR FIRE RATED
REFER TO GA. NO. WP 3240 (ON THIS SHEET)
(1) LAYER 5/8" TYPE "X" GWB (W.R. @ WET AREAS)
RESILIENT CHANNELS @ 24" O.C.
2 x 6 WOOD STUDS @ 16" O.C.
5-1/2" ROCK WOOL
(1) LAYER 5/8" TYPE "X" GWB (W.R. @ WET AREAS)

C

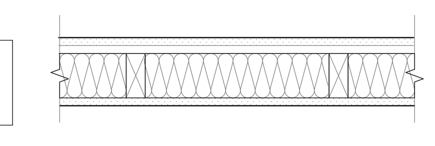

INTERIOR, 1-HR FIRE RATED
REFER TO GA. NO. WP 3240 (ON THIS SHEET)
(1) LAYER 5/8" TYPE "X" GWB (W.R. @ WET AREAS)
RESILIENT CHANNELS @ 24" O.C.
2 x 4 WOOD STUDS @ 16" O.C.
5-1/2" ROCK WOOL
(1) LAYER 5/8" TYPE "X" GWB (W.R. @ WET AREAS)

D

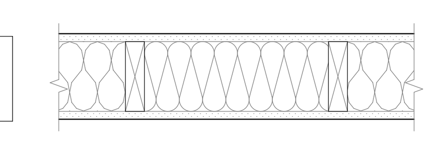

INTERIOR
5/8" GWB (W.R. @ WET AREAS)
2 x 6 WOOD STUDS @ 16" O.C.
5-1/2" SOUND BATTS
5/8" GWB (W.R. @ WET AREAS)

E

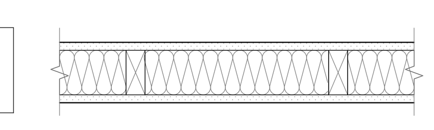

INTERIOR
5/8" GWB (W.R. @ WET AREAS)
2 x 4 WOOD STUDS @ 16" O.C.
3-1/2" SOUND BATTS
5/8" GWB (W.R. @ WET AREAS)

F

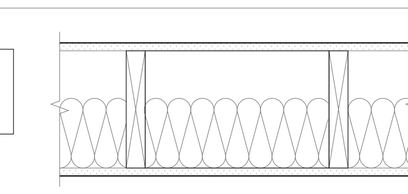

INTERIOR
5/8" GWB (W.R. @ WET AREAS)
2 x 4 WOOD STUDS @ 16" O.C.
5-1/2" SOUND BATTS
5/8" GWB (W.R. @ WET AREAS)

G

OTHER PROPOSED WALL SIDE

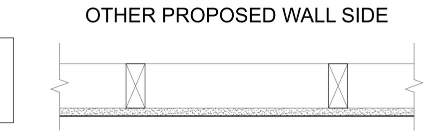

INTERIOR
FURRING ADDED TO PROPOSED WALL
OTHER PROPOSED WALL
AIR SPACE; SEPARATE AS NECESSARY
2 x 4 WOOD STUDS @ 16" O.C.;
LAY FLAT OR RIP AS NEEDED
5/8" GWB (W.R. @ WET AREAS)

FLOOR / CEILING ASSEMBLIES

NOTES:
1. SEE ASSEMBLY NOTES ON THIS SHEET.
2. SEE SHEET A6.1 FOR FIRE-STOP PENETRATIONS THROUGH RATED ASSEMBLIES.

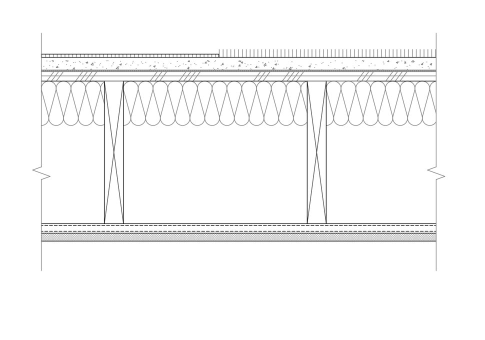

TYPICAL INTERIOR ASSEMBLY
1-HR FIRE RATED & **STC 50** (MINIMUM) ASSEMBLY
REFER TO **GA FILE No. FC 5109 (PROPRIETARY)**

FLOOR COVERING (PEDESTRIAN DECK COATING @ DECK)
1/2" (MIN.) GYPSUM FLOOR TOPPING (PROPRIETARY)
1/4" PROPRIETARY SOUND REDUCTION MAT
PLYWOOD SHEATHING PER STRUCTURAL
FLOOR I-JOISTS PER STRUCTURAL @ 16" O.C.
3-1/2" (MIN.) GLASS FIBER BATTS @ BOTTOM OF CAVITY
3/4" RESILIENT FURRING CHANNELS @ 16" O.C.
(RUN PERPENDICULAR TO JOISTS)
5/8" TYPE 'C' GWB (PROPRIETARY)

S9
SYNTHESIS 9, LLC
523 N. D ST.
TACOMA, WA 98403

REUSE OF DOCUMENTS
THIS DOCUMENT AND THE IDEAS AND DESIGNS INCORPORATED HERIN, AS INSTRUMENTS OF PROFESSIONAL SERVICE, ARE THE PROPERTY OF SYNTHESIS 9, LLC AND ARE NOT TO BE USED OR REPRODUCED IN WHOLE OR IN PART WITHOUT THE WRITTEN AUTHORIZATION OF SYNTHESIS 9, LLC.

REGISTERED ARCHITECT
9251
BRETT ALLEN LINDSAY
STATE OF WASHINGTON

PRCNC20250692

City of Puyallup
Development & Permitting Services
ISSUED PERMIT
Building | Planning
Engineering | Public Works
Fire | Traffic

EAST TOWN CROSSING
CLUBHOUSE with MANAGER'S APARTMENT
3002 E Pioneer Way PUYALLUP WA 98372
P/N: 0420264053

AGENCY REVIEW | REVISION No.2 | 25.07.25

REVISIONS

01	RESPONSE TO 1st COMMENTS: 25/06/24
02	RESPONSE TO 2nd COMMENTS: 25/07/21

REVISIONS

DRAWN BY:	BL / CM
CHECKED BY:	BL
DATE:	25.07.25
TITLE:	PROJECT INFORMATION, ASSEMBLY TYPES
PROJECT # :	2016
SHEET:	AG1.1

LIFE SAFETY PLAN

01

TOTAL LEVEL 1 OCCUPANT LOAD = 87
2 EXITS REQUIRED

TOTAL LEVEL 2 OCCUPANT LOAD = 8
1 EXIT REQUIRED + EGRESS WINDOWS

'Y LINE

'ROM LEVEL 2 RESIDENCE
ESS TRAVEL PATH = 50-FT

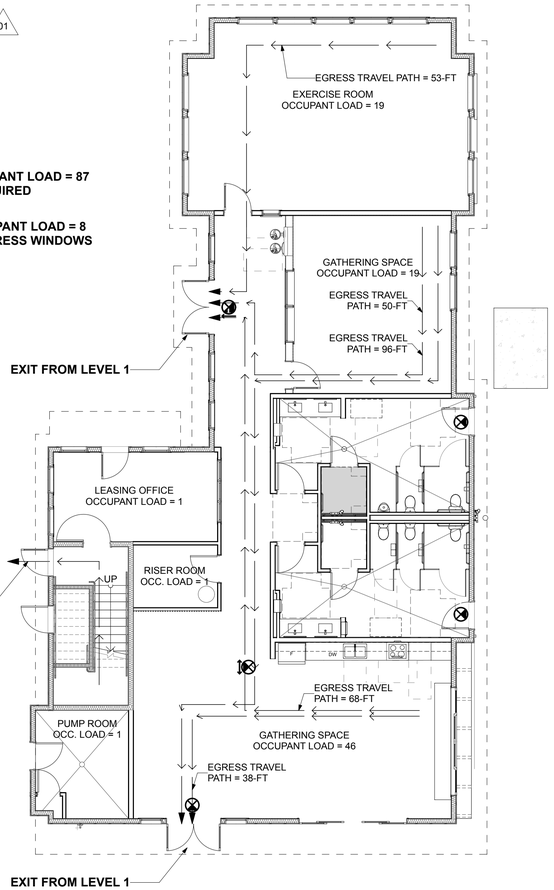

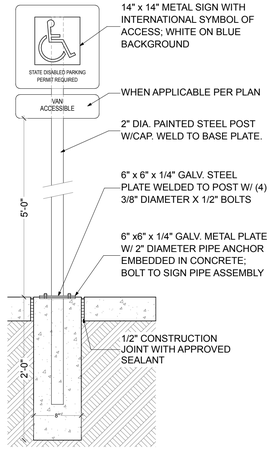

2 SITE SIGNAGE
SCALE: 1" = 1'-0"

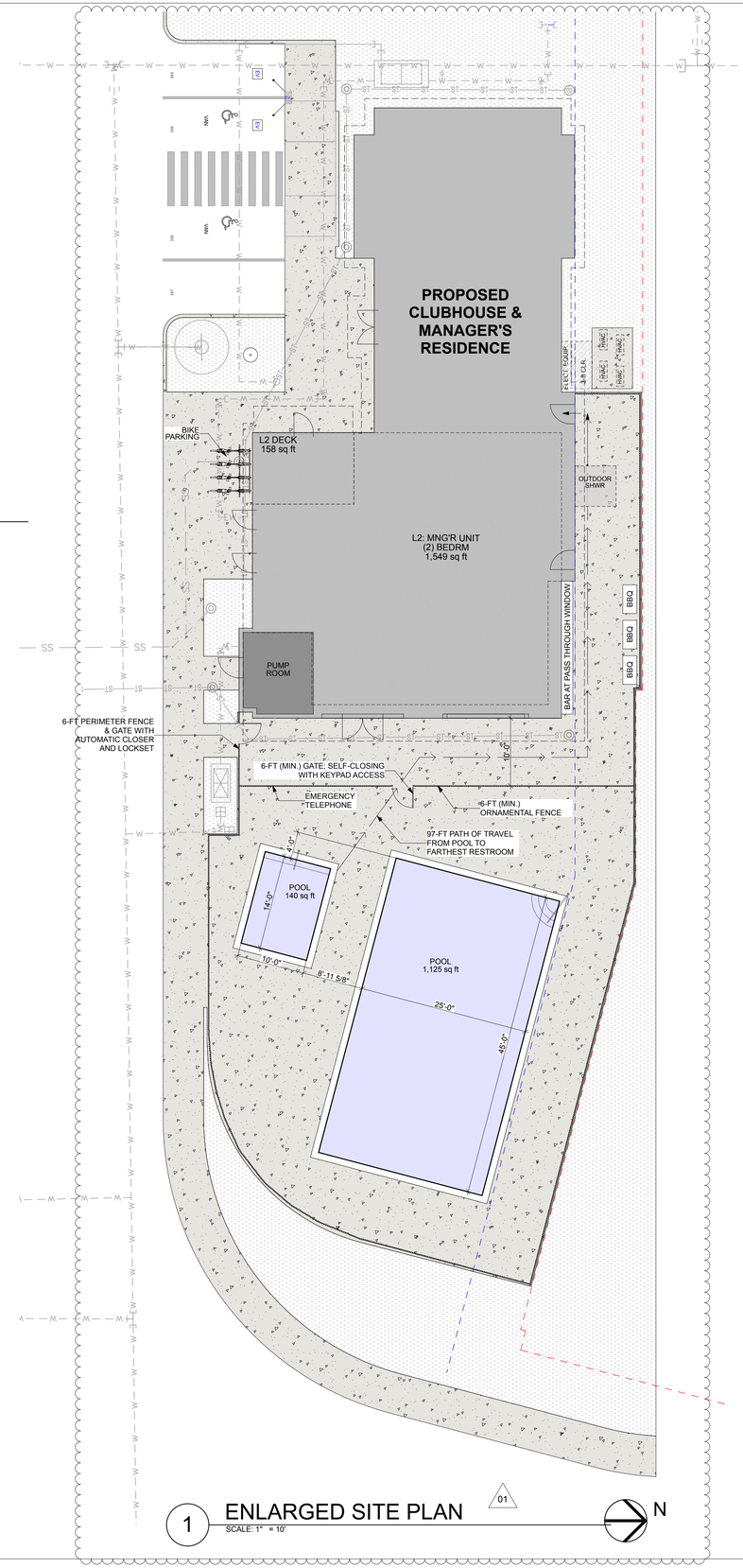

1 ENLARGED SITE PLAN
SCALE: 1" = 10'

01

N

S9

SYNTHESIS 9, LLC
523 N. D ST.
TACOMA, WA 98403

REUSE OF DOCUMENTS
THIS DOCUMENT AND THE IDEAS AND DESIGNS INCORPORATED HERIN, AS INSTRUMENTS OF PROFESSIONAL SERVICE, ARE THE PROPERTY OF SYNTHESIS 9, LLC AND ARE NOT TO BE USED OR REPRODUCED IN WHOLE, OR IN PART, WITHOUT THE WRITTEN AUTHORIZATION OF SYNTHESIS 9, LLC.

REGISTERED ARCHITECT
BRIAN LEVI LEWIS
STATE OF WASHINGTON
9251

PRCNC20250692

City of Puyallup
Development & Permitting Services
ISSUED PERMIT
Building | Planning
Engineering | Public Works
Fire | Traffic

EAST TOWN CROSSING

CLUBHOUSE with MANAGER'S APARTMENT
3002 E Pioneer Way PUYALLUP WA 98372
P/N: 0420264053

AGENCY REVIEW | REVISION No.2 | 25.07.25

REVISIONS	
01	RESPONSE TO 1st COMMENTS: 25/06/24
02	RESPONSE TO 2nd COMMENTS: 25/07/21

REVISIONS

DRAWN BY:	BL / CM
CHECKED BY:	BL
DATE:	25.07.25
TITLE:	ENLARGED SITE PLAN
PROJECT # :	2016
SHEET:	AS1.1

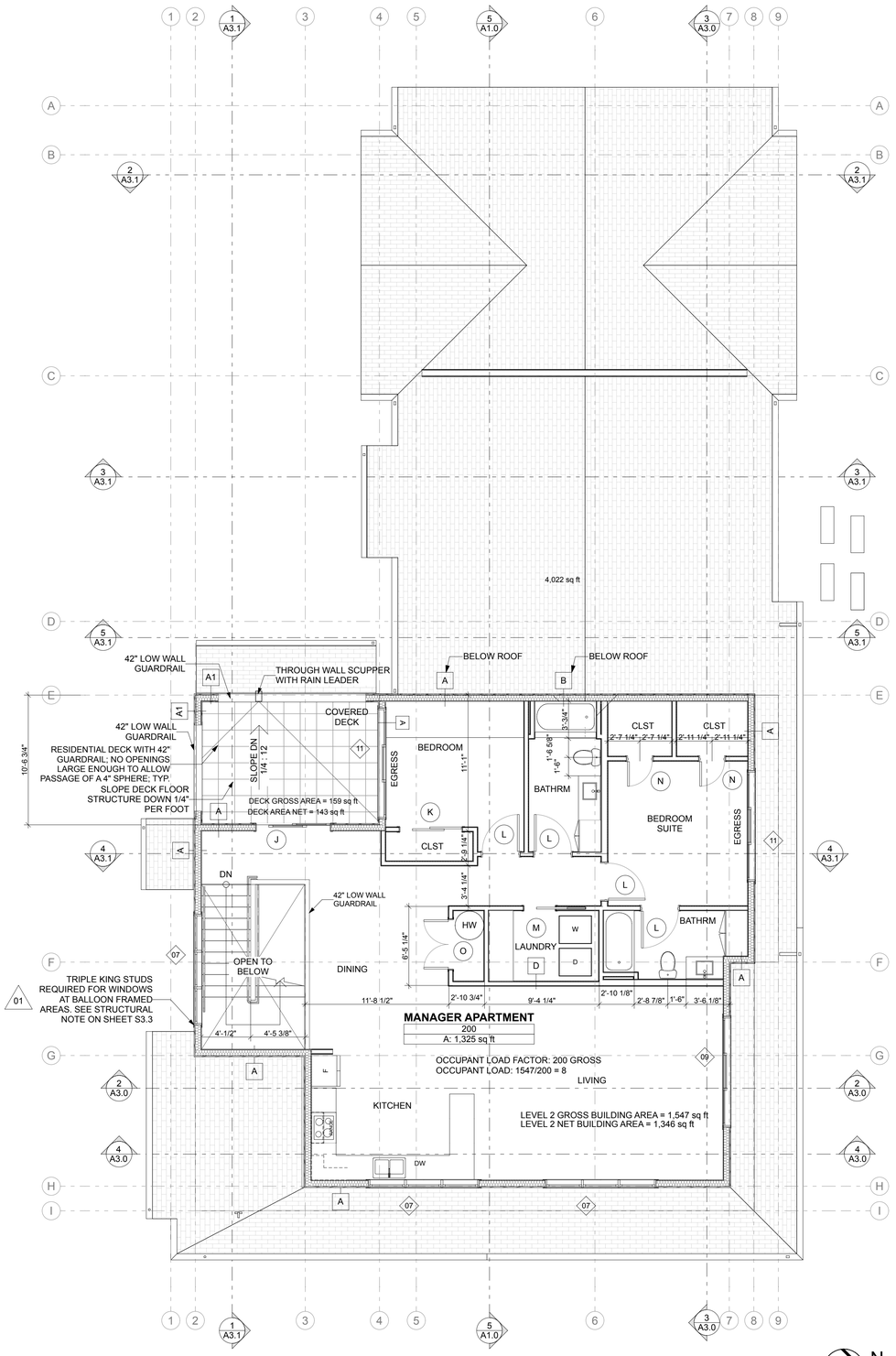

2 LEVEL 2 PLAN

**SEE 'WALL TYPES' ON SHEET AG1.1

SCALE: 3/16" = 1'-0"

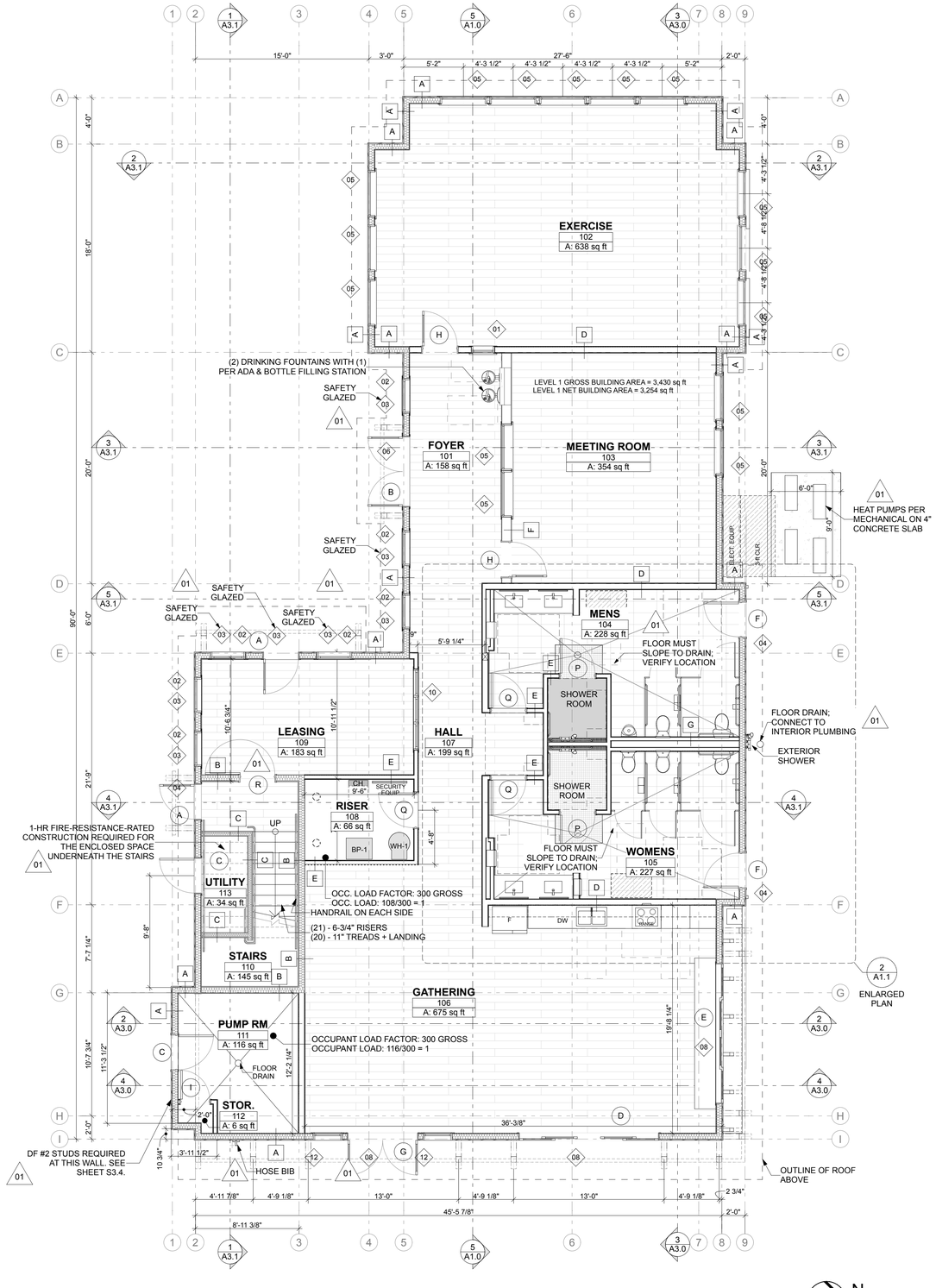

1 LEVEL 1 PLAN

**SEE 'WALL TYPES' ON SHEET AG1.1

SCALE: 3/16" = 1'-0"

S9
SYNTHESIS 9, LLC
523 N. D ST.
TACOMA, WA 98403

REUSE OF DOCUMENTS
THIS DOCUMENT AND THE IDEAS AND DESIGNS INCORPORATED HERIN, AS INSTRUMENTS OF PROFESSIONAL SERVICE, ARE THE PROPERTY OF SYNTHESIS 9, LLC AND ARE NOT TO BE USED OR REPRODUCED IN WHOLE, OR IN PART WITHOUT THE WRITTEN AUTHORIZATION OF SYNTHESIS 9, LLC.

REGISTERED ARCHITECT
9251
STATE OF WASHINGTON

PRCNC20250692

City of Puyallup
Development & Permitting Services
ISSUED PERMIT

Building	Planning
Engineering	Public Works
Fire	Traffic

EAST TOWN CROSSING

CLUBHOUSE with MANAGER'S APARTMENT
3002 E Pioneer Way PUYALLUP WA 98372
P/N: 0420264053

AGENCY REVIEW | REVISION No.2 | 25.07.25

REVISIONS

01	RESPONSE TO 1st COMMENTS: 25/05/24	
02	RESPONSE TO 2nd COMMENTS: 25/07/21	

REVISIONS

DRAWN BY:	BL / CM
CHECKED BY:	BL
DATE:	25.07.25
TITLE:	FLOOR PLANS
PROJECT # :	2016
SHEET:	A1.0

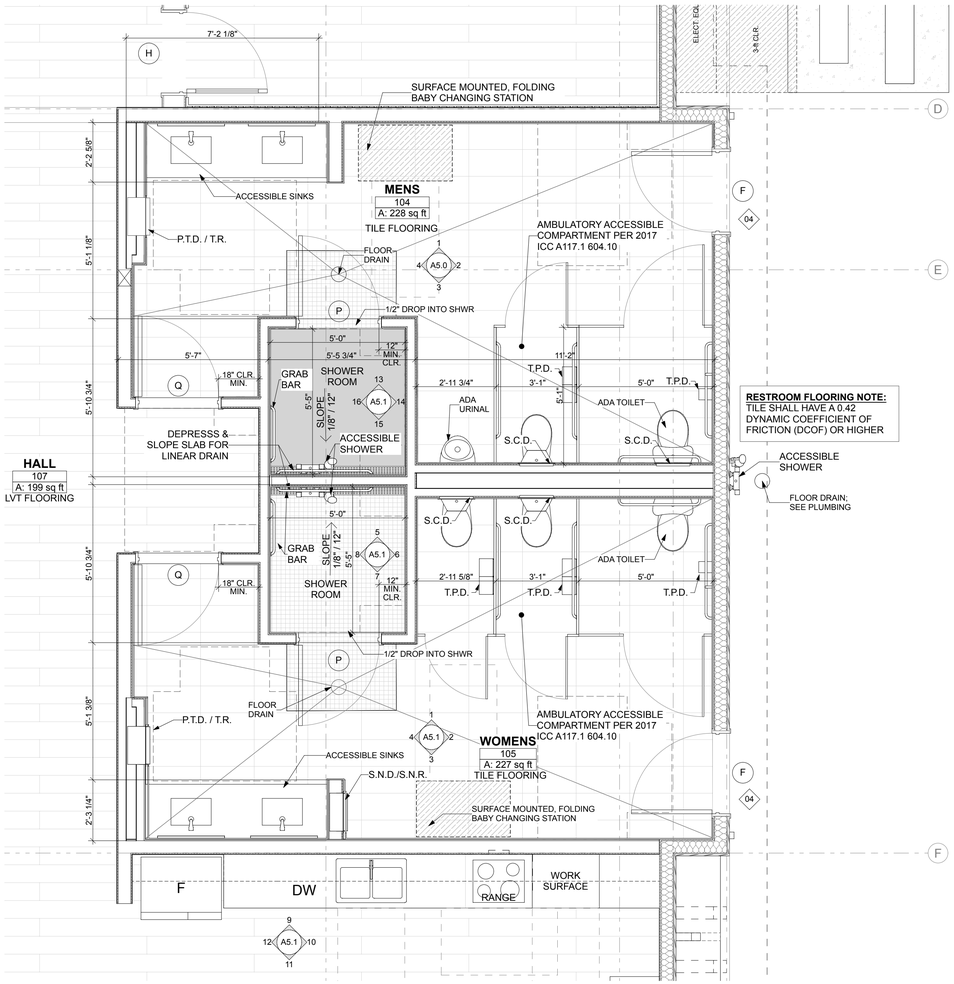

2 LEVEL 1 ENLARGED PLAN

SCALE: 3/8" = 1'-0"

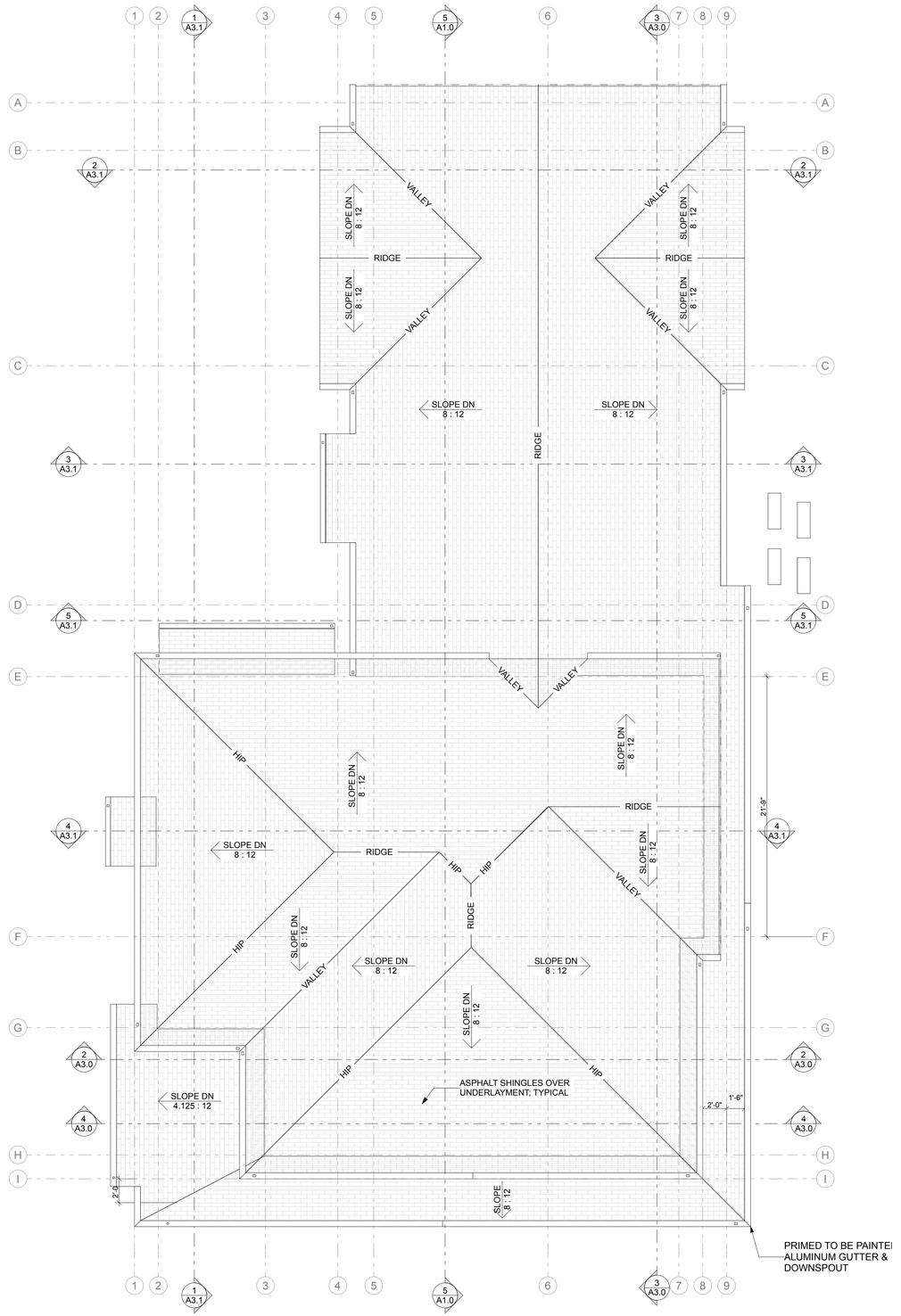

1 ROOF PLAN

SCALE: 3/16" = 1'-0"

ATTIC VENTILATION CALCULATIONS & REQUIREMENTS

AT LEAST 40% & NOT MORE THAN 50% OF REQUIRED VENTS SHALL BE IN UPPER PORTION OF VENTILATED ROOF SPACE (NO MORE THAN 3' BELOW THE RIDGE OR HIGHEST POINT) WITH THE BALANCE OF REQUIRED VENTILATION PROVIDED BY EAVE VENTING.

PER IBC 1203.2 ENCLOSED ATTICS AND ENCLOSED RAFTER SPACES FOR WHERE CEILINGS ARE APPLIED DIRECTLY TO THE UNDERSIDE OF ROOF RAFTERS SHALL HAVE CROSS VENTILATION OF EACH SEPARATE SPACE BY VENTILATING OPENINGS PROTECTED AGAINST THE ENTRANCE OF RAIN OR SNOW. VENTILATING OPENINGS SHALL BE PROVIDED WITH CORROSION RESISTANT WIRE MESH, WITH 1/8" MIN. & 1/4" MAX. OPENINGS.

IF EAVE VENTS ARE INSTALLED INSULATION SHALL NOT OBSTRUCT THE FREE FLOW OF AIR (MIN. 1" SPACE BETWEEN INSULATION AND ROOF SHEATHING @ VENT LOCATION. BAFFLING OF THE VENT OPENINGS SHALL BE INSTALLED. BAFFLES SHALL BE RIGID AND WIND-DRIVEN MOISTURE RESISTANT. IF FEASIBLE BAFFLES SHOULD BE INSTALLED FROM THE TOP OF THE OUTSIDE OF THE EXTERIOR WALL, EXTENDING INWARD, TO A POINT 6" VERTICALLY ABOVE THE HEIGHT OF NON-COMPRESSED INSULATION, & 12" VERTICALLY ABOVE LOOSE FILL INSULATION.

(ALL CALCULATIONS WILL BE NET FREE AREA)
NOTE: 14" DIAMETER, THROUGH ROOF VENTING PROVIDED BY PV-14-C12 POP VENTS (144 Sq. In. PER VENT) BY "ACTIVE VENTILATION PRODUCTS INC."
NOTE: EAVE VENTING PROVIDED BY (4)-2" DIAMETER "BIRD HOLES" PER EAVE BLOCK. (15" Sq. In. PER BLOCK). THERE ARE 30 RAFTER BAYS.

ROOF AREA:
PER UNIT - 1,623 Sq. Ft.. OF ATTIC AREA/300= 5.4 Sq. Ft..
OF VENTILATION REQUIRED (778 Sq. In.)
HIGH VENT = 30 X 15 = 450 Sq. In.
LOW VENT = 30 X 15 = 450 Sq. In.

SYNTHESIS 9, LLC
523 N. D ST.
TACOMA, WA 98403

REUSE OF DOCUMENTS
THIS DOCUMENT AND THE IDEAS AND DESIGNS INCORPORATED HERIN, AS INSTRUMENTS OF PROFESSIONAL SERVICE, ARE THE PROPERTY OF SYNTHESIS 9, LLC AND ARE NOT TO BE USED OR REPRODUCED IN WHOLE, OR IN PART, WITHOUT THE WRITTEN AUTHORIZATION OF SYNTHESIS 9, LLC.

REGISTERED ARCHITECT
9251
MARK WILLIAM HOPKINS
STATE OF WASHINGTON

PRCNC20250692

City of Puyallup
Development & Permitting Services
ISSUED PERMIT
Building | Planning
Engineering | Public Works
Fire | Traffic

EAST TOWN CROSSING
CLUBHOUSE with MANAGER'S APARTMENT
3002 E Pioneer Way PUYALLUP WA 98372
P/N: 0420264053

AGENCY REVIEW | REVISION No.2 | 25.07.25

REVISIONS

01	RESPONSE TO 1st COMMENTS:	25/06/24
02	RESPONSE TO 2nd COMMENTS:	25/07/21

REVISIONS

DRAWN BY:	BL / CM
CHECKED BY:	BL
DATE:	25.07.25
TITLE:	ENLARGED LEVEL 1 FLOOR PLAN & ROOF PLAN
PROJECT # :	2016
SHEET:	A1.1

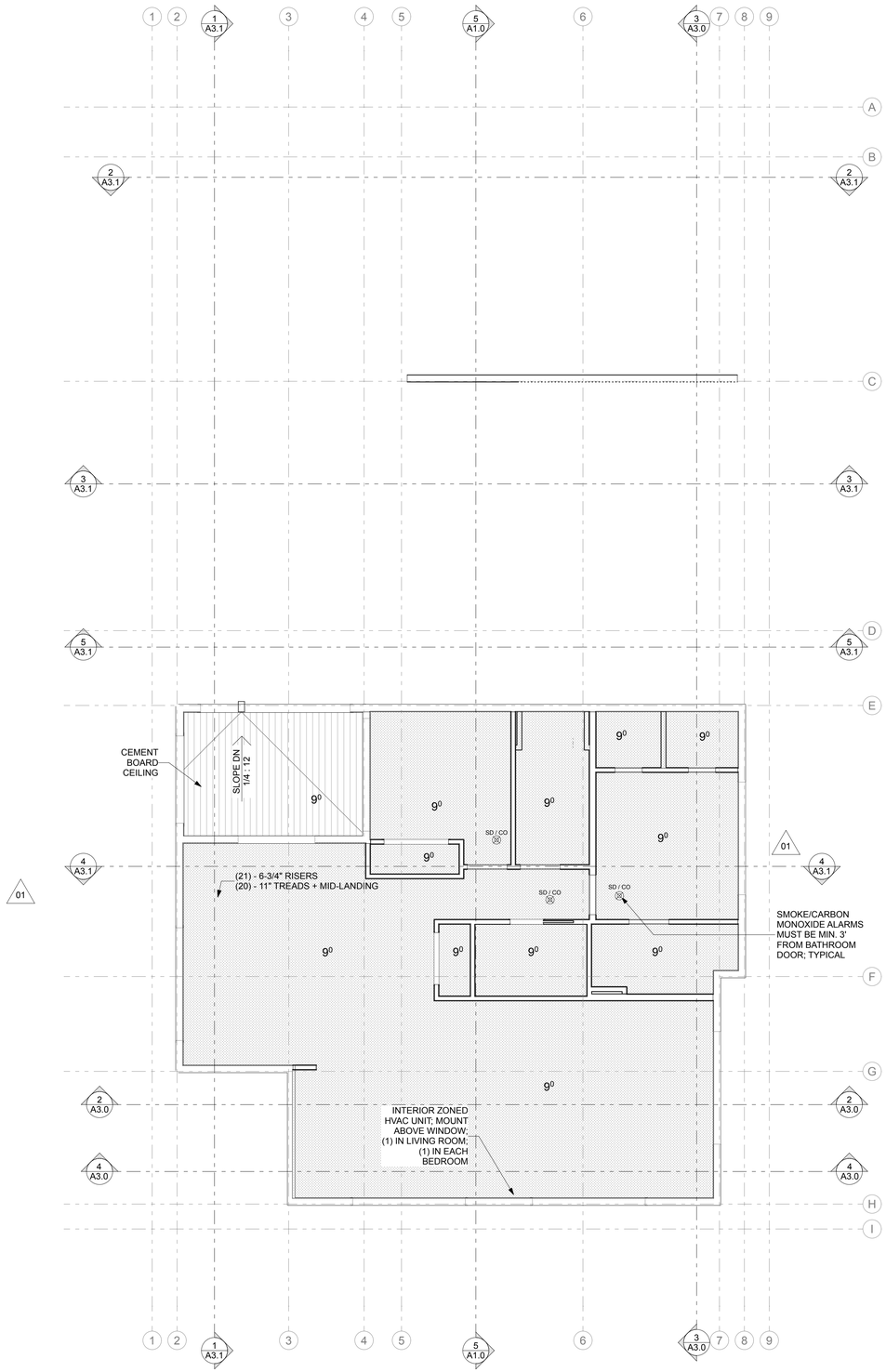

2 LEVEL 2 REFLECTED CEILING PLAN

SCALE: 3/16" = 1'-0"

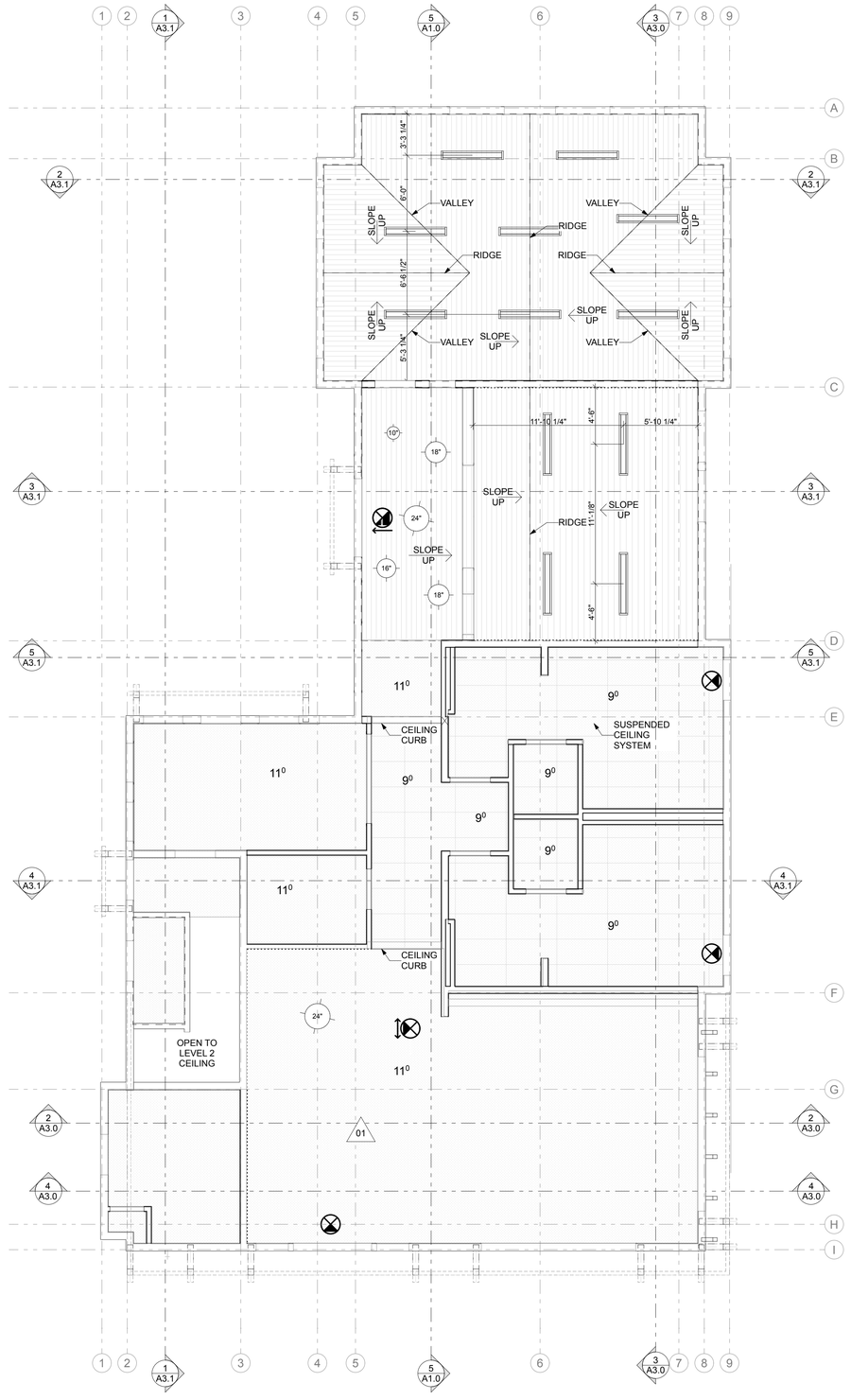

1 LEVEL 1 REFLECTED CEILING PLAN

SCALE: 3/16" = 1'-0"

SYNTHESIS 9, LLC
523 N. D ST.
TACOMA, WA 98403

REUSE OF DOCUMENTS
THIS DOCUMENT AND THE IDEAS AND DESIGNS INCORPORATED HERIN, AS INSTRUMENTS OF PROFESSIONAL SERVICE, ARE THE PROPERTY OF SYNTHESIS 9, LLC AND ARE NOT TO BE USED OR REPRODUCED IN WHOLE, OR IN PART, WITHOUT THE WRITTEN AUTHORIZATION OF SYNTHESIS 9, LLC.

REGISTERED ARCHITECT
9251
STATE OF WASHINGTON

PRCNC20250692

City of Puyallup
Development & Planning Services
ISSUED PERMIT
Building | Planning
Engineering | Public Works
Fire | Traffic

EAST TOWN CROSSING
CLUBHOUSE with MANAGER'S APARTMENT
3002 E Pioneer Way PUYALLUP WA 98372
P/N: 042026405300

AGENCY REVIEW | REVISION No.2 | 25.07.25

REVISIONS

01	RESPONSE TO 1st COMMENTS:	25/06/24
02	RESPONSE TO 2nd COMMENTS:	25/07/21

REVISIONS

DRAWN BY:	BL / CM
CHECKED BY:	BL
DATE:	25.07.25
TITLE:	REFLECTED CEILING PLANS
PROJECT # :	2016
SHEET:	A1.2

2 SOUTH ELEVATION

SCALE: 3/16" = 1'-0"

1 WEST ELEVATION

SCALE: 3/16" = 1'-0"

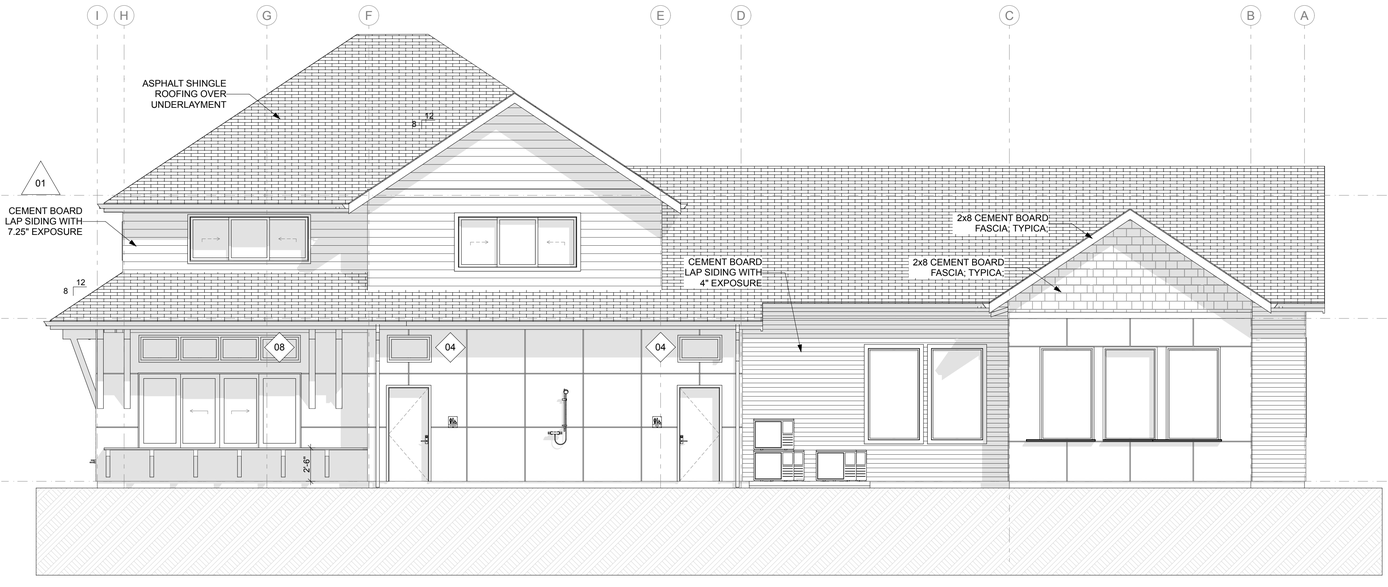

4 NORTH ELEVATION

SCALE: 3/16" = 1'-0"

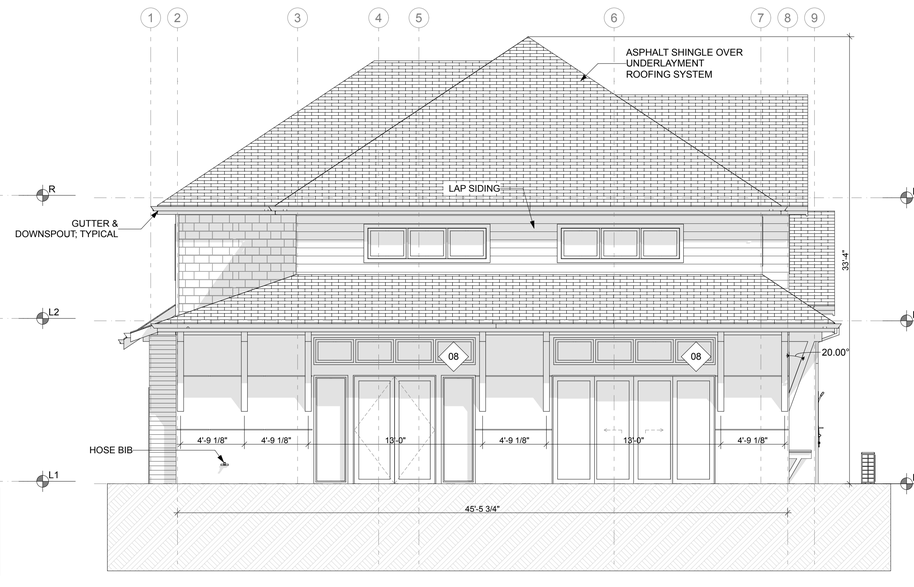

3 EAST ELEVATION

SCALE: 3/16" = 1'-0"

S9

SYNTHESIS 9, LLC
523 N. D ST.
TACOMA, WA 98403

REUSE OF DOCUMENTS
THIS DOCUMENT AND THE IDEAS AND DESIGNS INCORPORATED HERIN, AS INSTRUMENTS OF PROFESSIONAL SERVICE, ARE THE PROPERTY OF SYNTHESIS 9, LLC AND ARE NOT TO BE USED OR REPRODUCED IN WHOLE, OR IN PART, WITHOUT THE WRITTEN AUTHORIZATION OF SYNTHESIS 9, LLC.

REGISTERED ARCHITECT
9251
STATE OF WASHINGTON

PRCNC20250692

City of Puyallup
Development & Permitting Services
ISSUED PERMIT
Building | Planning
Engineering | Public Works
Fire | Traffic

EAST TOWN CROSSING

CLUBHOUSE with MANAGER'S APARTMENT
3002 E Pioneer Way PUYALLUP WA 98372
P/N: 042026405300

AGENCY REVIEW I REVISION No.2 I 25.07.25

REVISIONS

01	RESPONSE TO 1st COMMENTS: 25/06/24
02	RESPONSE TO 2nd COMMENTS: 25/07/21

REVISIONS

DRAWN BY:	BL / CM
CHECKED BY:	BL
DATE:	25.07.25
TITLE:	ELEVATIONS
PROJECT # :	2016
SHEET:	A2.0

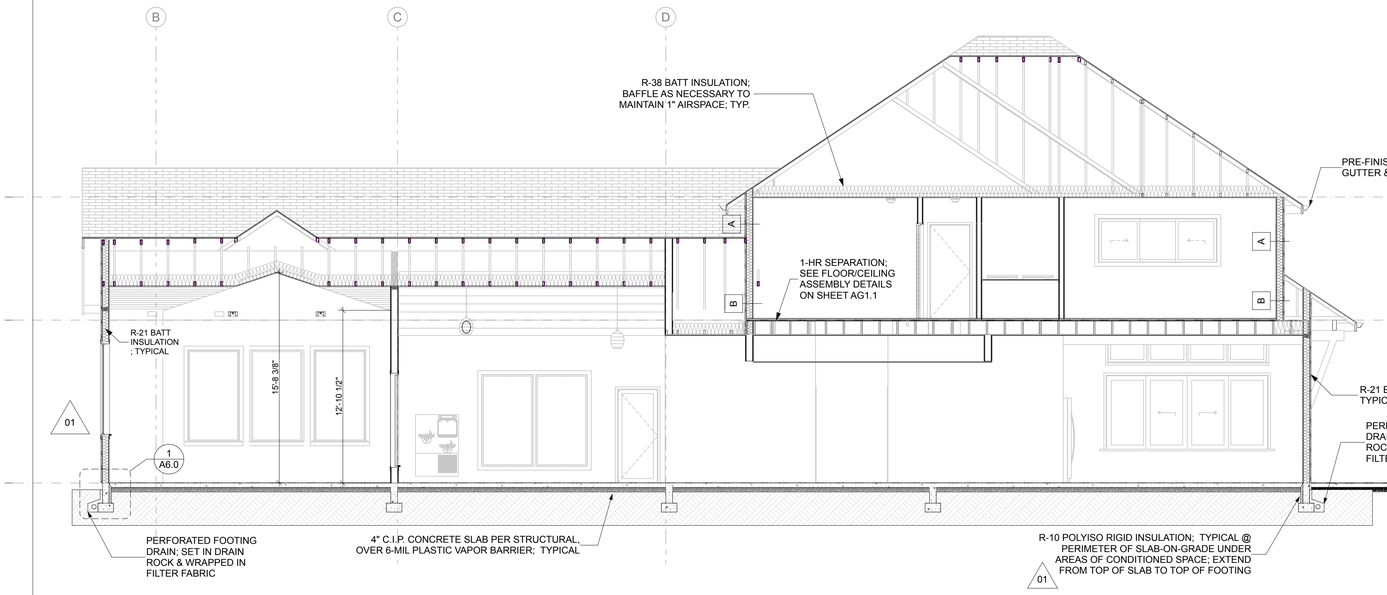

1 SECTION 1
SCALE: 3/16" = 1'-0"

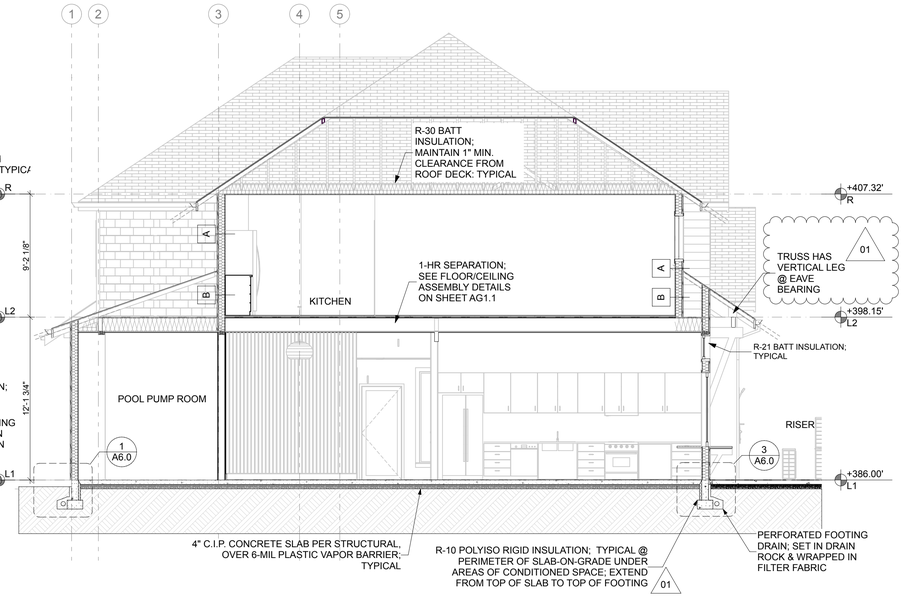

2 SECTION 2
SCALE: 3/16" = 1'-0"

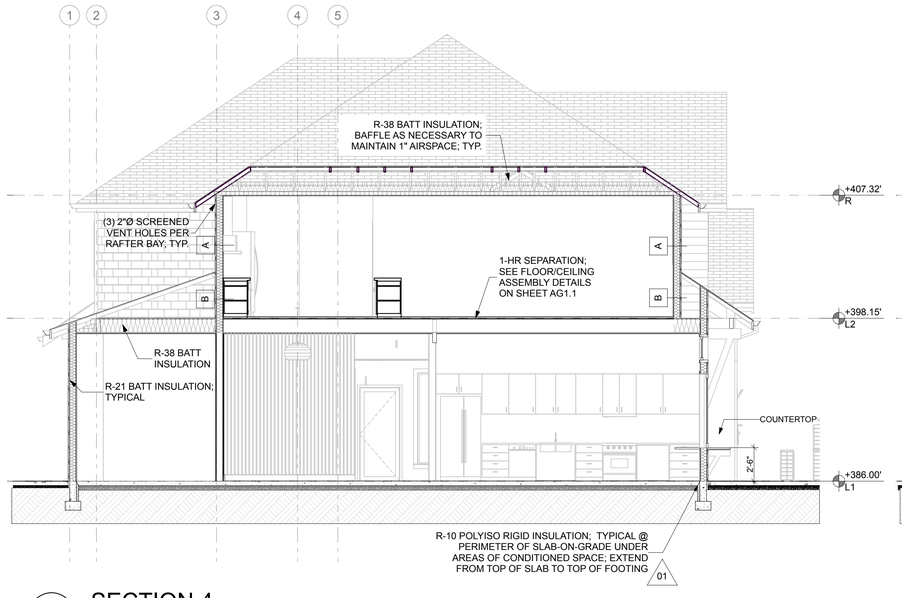

4 SECTION 4
SCALE: 3/16" = 1'-0"

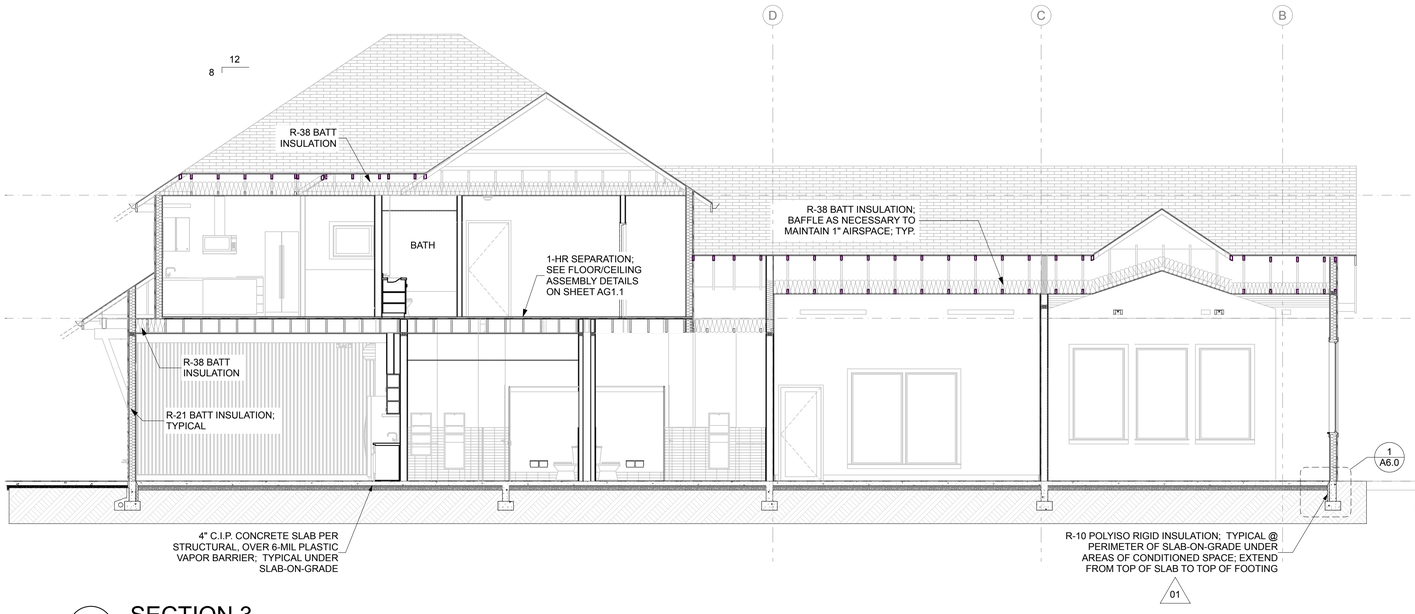

3 SECTION 3
SCALE: 3/16" = 1'-0"

S9

SYNTHESIS 9, LLC
523 N. D ST.
TACOMA, WA 98403

REUSE OF DOCUMENTS
THIS DOCUMENT AND THE IDEAS AND DESIGNS INCORPORATED HEREIN, AS INSTRUMENTS OF PROFESSIONAL SERVICE, ARE THE PROPERTY OF SYNTHESIS 9, LLC AND ARE NOT TO BE USED OR REPRODUCED IN WHOLE OR IN PART WITHOUT THE WRITTEN AUTHORIZATION OF SYNTHESIS 9, LLC.

REGISTERED ARCHITECT
9251
BRETT ALLEN LINDSAY
STATE OF WASHINGTON

PRCNC20250692

City of Puyallup
Development & Permitting Services
ISSUED PERMIT
Building | Planning
Engineering | Public Works
Fire | Traffic

EAST TOWN CROSSING
CLUBHOUSE with MANAGER'S APARTMENT
3002 E Pioneer Way PUYALLUP WA 98372
P/N: 0420264053

REVISIONS

01	RESPONSE TO 1st COMMENTS: 25/06/24
02	RESPONSE TO 2nd COMMENTS: 25/07/21

REVISIONS

DRAWN BY:	BL / CM
CHECKED BY:	BL
DATE:	25.07.25
TITLE:	BUILDING SECTIONS
PROJECT #:	2016
SHEET:	A3.0

AGENCY REVIEW | REVISION No.2 | 25.07.25

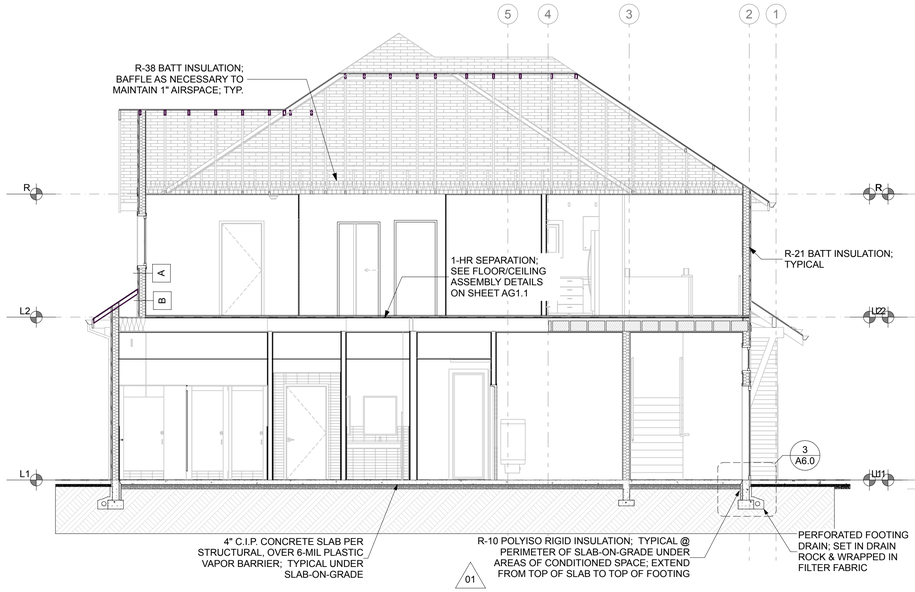

4 SECTION 8

SCALE: 3/16" = 1'-0"

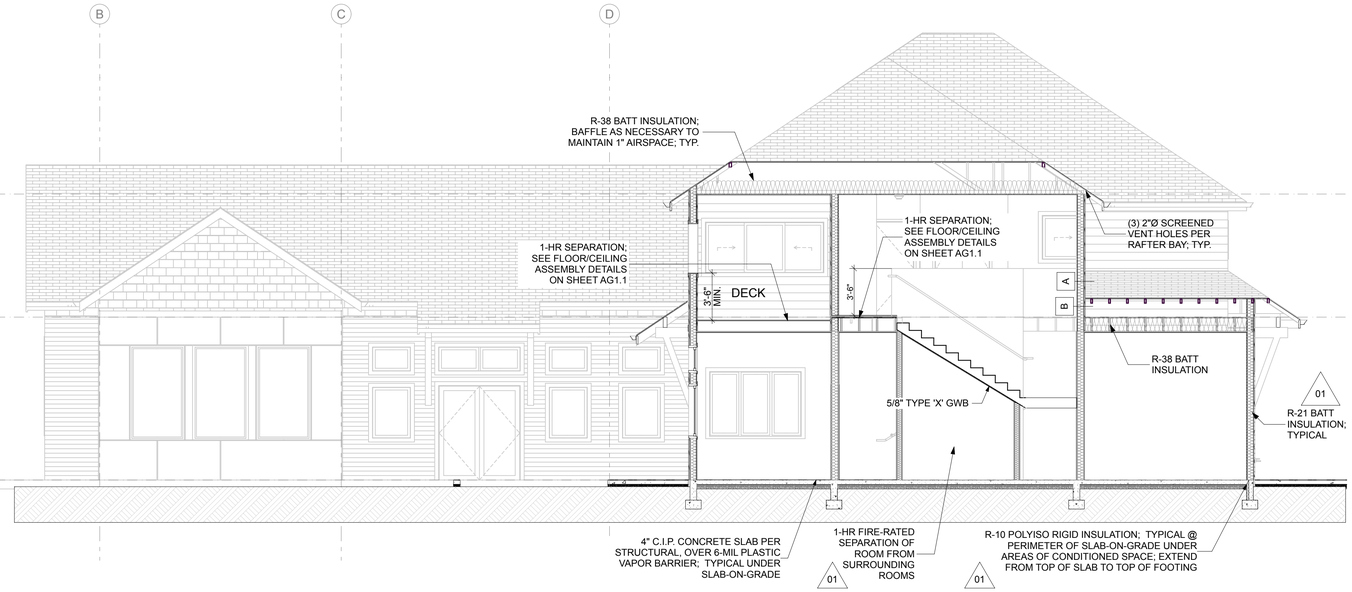

1 SECTION 5

SCALE: 3/16" = 1'-0"

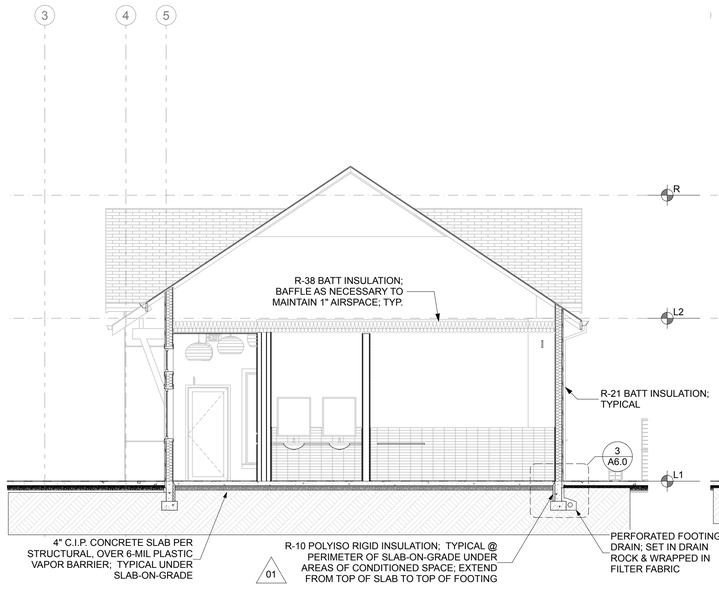

5 SECTION 9

SCALE: 3/16" = 1'-0"

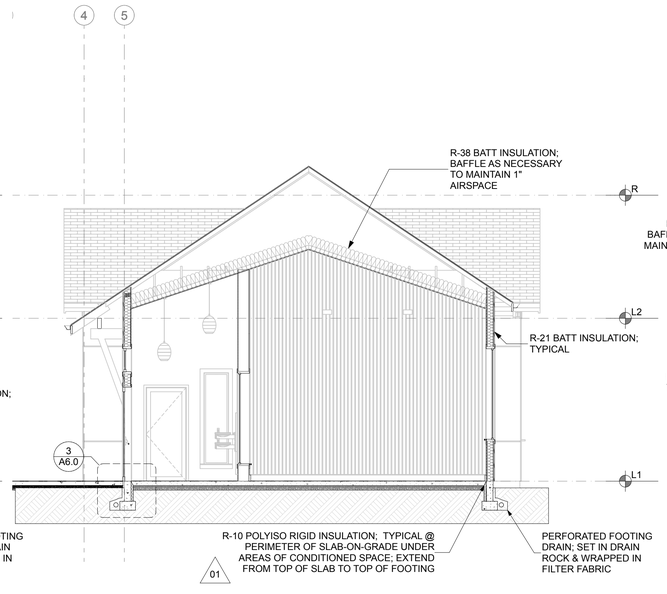

3 SECTION 7

SCALE: 3/16" = 1'-0"

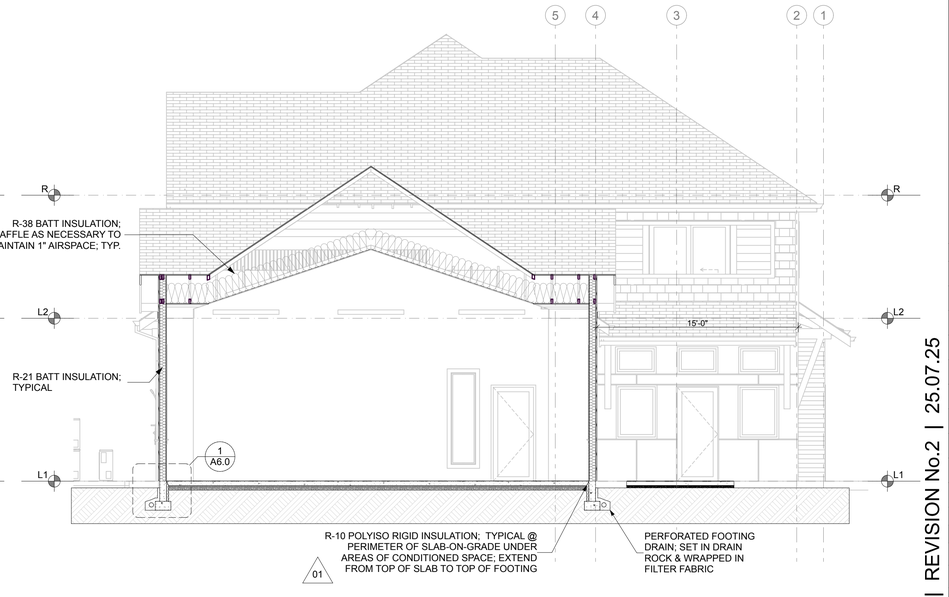

2 SECTION 6

SCALE: 3/16" = 1'-0"

S9
SYNTHESIS 9, LLC
523 N. D ST.
TACOMA, WA 98403

REUSE OF DOCUMENTS
THIS DOCUMENT AND THE IDEAS AND DESIGNS INCORPORATED HERIN, AS INSTRUMENTS OF PROFESSIONAL SERVICE, ARE THE PROPERTY OF SYNTHESIS 9, LLC AND ARE NOT TO BE USED OR REPRODUCED IN WHOLE OR IN PART WITHOUT THE WRITTEN AUTHORIZATION OF SYNTHESIS 9, LLC.

REGISTERED ARCHITECT
9251
BRETT M. LOVEJOY
STATE OF WASHINGTON

PRCNC20250692

City of Puyallup
Development & Permitting Services
ISSUED PERMIT

Building	Planning
Engineering	Public Works
Fire	Traffic

EAST TOWN CROSSING

CLUBHOUSE with MANAGER'S APARTMENT
3002 E Pioneer Way PUYALLUP WA 98372
P/N: 042026405

AGENCY REVIEW I REVISION No.2 I 25.07.25

REVISIONS

01	RESPONSE TO 1st COMMENTS: 25/06/24	
02	RESPONSE TO 2nd COMMENTS: 25/07/21	

REVISIONS

DRAWN BY:	BL / CM
CHECKED BY:	BL
DATE:	25.07.25
TITLE:	BUILDING SECTIONS
PROJECT # :	2016
SHEET:	A3.1

WINDOW TYPES

ELEVATION	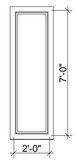	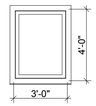			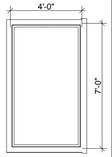	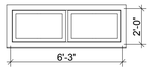	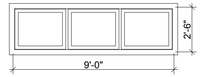	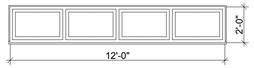	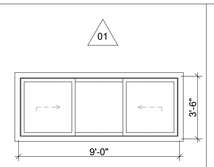	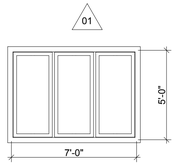	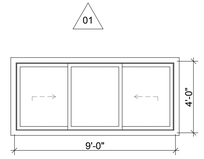	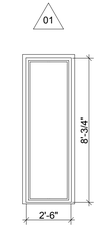
TYPE	01	02	03	04	05	06	07	08	09	10	11	12
SIZE (W x H)	2'-0"×7'-0"	3'-0"×4'-0"	3'-0"×2'-0"	3'-3"×2'-0"	4'-0"×7'-0"	6'-3"×2'-0"	9'-0"×2'-6"	12'-0"×2'-0"	9'-0"×3'-6"	7'-0"×5'-0"	9'-0"×4'-0"	2'-6"×8'-3/4"
QUANTITY	1	7	8	3	15	1	3	3	1	1	2	2
U-VALUE/SHGC	N/A	0.30 / 0.38	0.30 / 0.38	0.30 / 0.38	N/A	0.30 / 0.38	0.30 / 0.38	0.30 / 0.38	0.30 / 0.38	0.30 / 0.38	0.30 / 0.38	0.30 / 0.38
NOTES	SAFETY GLAZED		SAFETY GLAZED PER PLAN		SAFETY GLAZED							SAFETY GLAZED

DOOR TYPES

ELEVATION	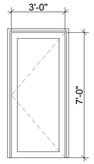	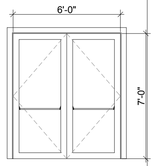	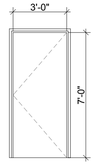	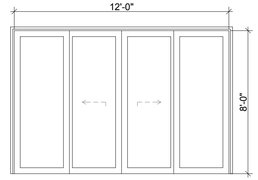	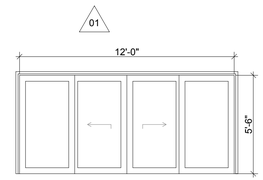	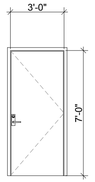	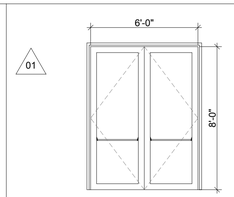	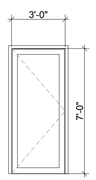	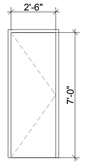	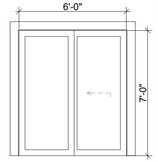	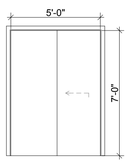	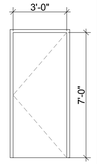
TYPE	A	B	C	D	E	F	G	H	I	J	K	L
SIZE (W x H)	3'-0"×7'-0"	6'-0"×7'-0"	3'-0"×7'-0"	12'-0"×8'-0"	12'-0"×5'-6"	3'-0"×7'-0"	6'-0"×8'-0"	3'-0"×7'-0"	2'-6"×7'-0"	6'-0"×7'-0"	5'-0"×7'-0"	3'-0"×7'-0"
QUANTITY	2	1	2	1	1	2	1	2	1	1	1	4
U-VALUE/SHGC	0.60 / 0.38	0.60 / 0.38	0.60 / 0.38	0.60 DOOR, 0.30 SIDELIGHTS / 0.38	0.30 / 0.38	0.60	0.60 DOOR	N/A	N/A	N/A	N/A	N/A
NOTES	SAFETY GLAZED; ACCESSIBLE THRESHOLD	SAFETY GLAZED; ACCESSIBLE THRESHOLD	ACCESSIBLE THRESHOLD	SAFETY GLAZED; ACCESSIBLE THRESHOLD	SAFETY GLAZED	ACCESSIBLE THRESHOLD	SAFETY GLAZED; ACCESSIBLE THRESHOLD	INTERIOR DOORS; SAFETY GLAZED		SAFETY GLAZED		

ELEVATION		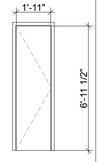	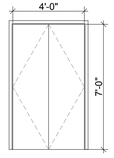	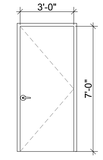	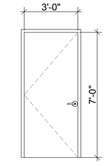	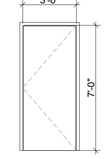
TYPE	M	N	O	P	Q	R
SIZE (W x H)	2'-6"×7'-0"	2'-0"×7'-0"	4'-0"×7'-0"	3'-0"×7'-0"	3'-0"×7'-0"	3'-0"×7'-0"
QUANTITY	1	2	1	2	3	1
U-VALUE/SHGC	N/A	N/A	N/A	N/A	N/A	N/A
NOTES				PRIVACY LOCK; PANIC HARDWARE; STEAM / WATER RESISTANT FINISH		60-MINUTE FIRE-RATED WITH CLOSER

DOOR SCHEDULE NOTES:

DOOR OPERATIONS PER 1008.1.9 - EGRESS DOORS SHALL BE READILY OPENABLE FROM THE EGRESS SIDE WITHOUT THE USE OF A KEY OR SPECIAL KNOWLEDGE OR EFFORT.

DOOR HARDWARE PER 1008.1.9.1 - DOOR HANDLES, PULLS, LATCHES, LOCKS AND OTHER OPERATING DEVICES ON DOORS REQUIRED TO BE ACCESSIBLE BY CHAPTER 11 SHALL NOT REQUIRE TIGHT GRASPING, TIGHT PINCHING OR TWISTING OF THE WRIST TO OPERATE. 01

HARDWARE HEIGHT PER 1008.1.9.2 - DOOR HANDLES, PULLS, LATCHES, LOCKS AND OTHER OPERATING DEVICES SHALL BE INSTALLED 34 INCHES MINIMUM AND 48 INCHES MAXIMUM ABOVE THE FINISHED FLOOR. LOCKS USED ONLY FOR SECURITY PURPOSES AND NOT USED FOR NORMAL OPERATION ARE PERMITTED AT ANY HEIGHT.

ACCESSIBLE THRESHOLDS PER ICC A117.1-2017 SECTION 303 - THRESHOLDS AT DOORWAYS SHALL BE 1/2" MAXIMUM IN HEIGHT.

DOOR CLOSERS PER ICC A117.1-2017 - DOOR CLOSERS SHALL BE ADJUSTED SO THAT FROM AN OPEN POSITION OF 90 DEGREES, THE TIME REQUIRED TO MOVE THROUGH THE DOOR TO AN OPEN POSITION OF 12 DEGREES SHALL BE 5 SECONDS.

DOOR-OPENING FORCE PER ICC A117.1-2017 - THE FORCE FOR PUSHING OR PULLING OPEN DOORS SHALL BE 10.0 POUNDS MAXIMUM PER WASHINGTON STATE AMMENDMENT.

DOOR HARDWARE LOCKSETS and DEFINITIONS

SECURITY LOCKSET - THE LATCHBOLT IS RETRACTED BY THE GRIP ON EITHER SIDE UNLESS THE OUTSIDE GRIP IS LOCKED BY THE OUTSIDE KEY. OPERATING THE INSIDE GRIP ALWAYS RETRACTS THE LATCHBOLT. 01

ACCESSIBLE SECURITY LOCKSET - THE LATCHBOLT IS RETRACTED BY THE GRIP ON EITHER SIDE UNLESS THE OUTSIDE GRIP IS LOCKED BY EITHER THE INSIDE KEY OR THE OUTSIDE KEY. OPERATING THE INSIDE GRIP ALWAYS RETRACTS THE LATCHBOLT. ALL COMPONENTS OF THE DOOR HARDWARE TO MEET ACCESSIBILITY REQUIREMENTS OF SECTION 1008.1.9 OF THE 2021 IBC.

OFFICE LOCKSET - THE LATCHBOLT IS RETRACTED BY THE GRIP ON EITHER SIDE UNLESS THE OUTSIDE GRIP IS LOCKED BY THE TOGGLE OR OUTSIDE KEY. OPERATING THE INSIDE GRIP DOES NOT UNLOCK THE OUTSIDE GRIP.

PASSAGE LOCKSET - THE LATCHBOLT IS ALWAYS RETRACTED BY THE GRIP ON EITHER SIDE. BOTH GRIPS ARE ALWAYS FREE.

PRIVACY LOCKSET - THE LATCHBOLT IS RETRACTED BY THE GRIP ON EITHER SIDE UNLESS THE OUTSIDE GRIP IS LOCKED BY THE INSIDE THUMB-TURN, BUTTON OR KEY. OPERATING THE INSIDE GRIP UNLOCKS THE OUTSIDE GRIP. AN EMERGENCY RELEASE TOOL UNLOCKS THE OUTSIDE GRIP. THE OUTSIDE GRIP IS ALSO UNLOCKED WHEN THE DOOR IS CLOSED. DOOR CAN ONLY BE LOCKED FROM THE INSIDE WHEN THE DOOR IS CLOSED.

PUBLIC RESTROOM LOCKSET - THE LATCHBOLT IS RETRACTED BY THE INSIDE GRIP OR AN OUTSIDE KEY. THE LATCHBOLT IS RETRACTED BY THE OUTSIDE GRIP INLESS THE GRIP IS LOCKED BY A KEY FROM THE INSIDE. THE LATCHBOLT / OUSIDE GRIP CANNOT BE LOCKET BY A KEY FROM THE OUTSIDE. ALL COMPONENTS OF THE DOOR HARDWARE GROUP TO MEET ACCESSIBILITY REQUIREMENTS OF SECTION 1008.1.9 OF THE 2021 IBC.

STOREROOM LOCKSET - THE LATCHBOLT IS RETRACTED BY THE INSIDE GRIP OR OUTSIDE KEY.

CLOSET LOCKSET - THE LATCHBOLT IS RETRACTED BY THE OUTSIDE AND THE INSIDE GRIP AND THE GRIP CANNOT BE LOCKED.

GLAZING NOTES:

1. GLAZING IN A FIXED AND OPERABLE PANELS OF SWINGING, SLIDING AND BIFOLD DOORS SHALL BE CONSIDERED HAZARDOUS LOCATIONS.

2. GLAZING IN AN INDIVIDUAL FIXED OR OPERABLE PANEL ADJACENT TO A DOOR WHERE THE NEAREST VERTICAL EDGE OF THE GLAZING US WITHIN A 24-INCH ARC OF EITHER VERTICAL EDGE OF THE DOOR IN A CLOSED POSITION AND WHERE THE BOTTOM EDGE OF THE GLAZING IS LESS THAT 60 INCHES ABOVE THE WALKING SURFACE SHALL BE CONSIDERED A HAZARDOUS LOCATION.

3. GLAZING IN INDIVIDUAL *FIXED* OR OPERABLE PANEL OF A WINDOW THAT MEETS ALL OF THE FOLLOWING FOUR CONDITIONS SHALL BE CONSIDERED A HAZARDOUS LOCATION: 1. THE EXPOSED AREA OF AN INDIVIDUAL PANE OS GREATER THAN 9 SQAURE FEET, 2. THE BOTTOM EDGE OF THE GLAZING IS LESS THAN 18 INCHES ABOVE THE FLOOR; 3. THE TOP EDGE OF THE GLAZING IS GREATER THAN 36 INCHES ABOVE THE FLOOR; AND 4. ONE OR MORE WALKING SURFACE(S) ARE WITHIN 36 INCHES, MEASURED HORIZONTALLY AND IN A STRAIGHT LINE, OF THE PLANE OF THE GLAZING

SYNTHESIS 9, LLC
523 N. D ST.
TACOMA, WA 98403

REUSE OF DOCUMENTS
THIS DOCUMENT AND THE IDEAS AND DESIGNS INCORPORATED HERIN, AS INSTRUMENTS OF PROFESSIONAL SERVICE, ARE THE PROPERTY OF SYNTHESIS 9, LLC AND ARE NOT TO BE USED OR REPRODUCED IN WHOLE, OR IN PART, WITHOUT THE WRITTEN AUTHORIZATION OF SYNTHESIS 9, LLC.

REGISTERED ARCHITECT
BRETT LEVI LINDOW
STATE OF WASHINGTON
9251

PRCNC20250692

City of Puyallup
Development & Permitting Services
ISSUED PERMIT
Building | Planning
Engineering | Public Works
Fire | Traffic

EAST TOWN CROSSING
CLUBHOUSE with MANAGER'S APARTMENT
3002 E Pioneer Way PUYALLUP WA 98372
P/N: 0420264053

AGENCY REVIEW | REVISION No.2 | 25.07.25

REVISIONS

01	RESPONSE TO 1st COMMENTS: 25/06/24
02	RESPONSE TO 2nd COMMENTS. 25/07/21

REVISIONS

DRAWN BY:	BL / CM
CHECKED BY:	BL
DATE:	25.07.25
TITLE:	DOORS & WINDOWS
PROJECT # :	2016
SHEET:	A4.0

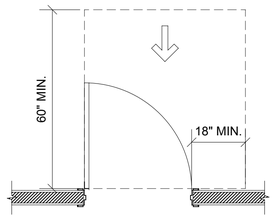

FRONT APPROACH, PULL SIDE

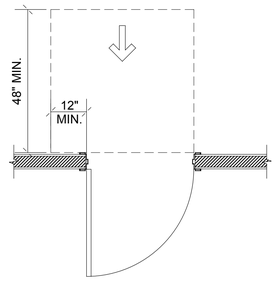

FRONT APPROACH, PUSH SIDE

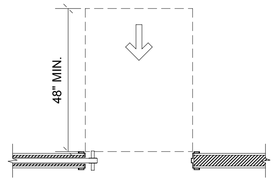

FRONT APPROACH, POCKET

402.2.2 CLEAR WIDTH
DOORWAYS SHALL HAVE A CLEAR OPENING WIDTH OF 32 INCHES MINIMUM. CLEAR OPENING WIDTH OF DOORWAYS WITH SWINGING DOORS SHALL BE MEASURED BETWEEN THE FACE OF THE DOOR AND STOP, WITH THE DOOR OPEN 90 DEGREES. OPENINGS MORE THAN 24 INCHES IN DEPTH AT DOORS AND DOORWAYS WITHOUT DOORS SHALL PROVIDE A CLEAR OPENING WIDTH OF 36 INCHES MINIMUM. THERE SHALL BE NO PROJECTIONS INTO THE CLEAR OPENING WIDTH LOWER THAN 34 INCHES ABOVE THE FLOOR. PROJECTIONS INTO THE CLEAR OPENING WIDTH BETWEEN 34 INCHES AND 80 INCHES ABOVE THE FLOOR SHALL NOT EXCEED 4 INCHES.

EXCEPTIONS:
1. DOOR CLOSERS AND DOOR STOPS SHALL BE PERMITTED TO BE 78 INCHES MINIMUM ABOVE THE FLOOR.
2. IN ALTERATIONS, A PROJECTION OF 5/8" MAXIMUM INTO THE REQUIRED CLEAR OPENING WIDTH SHALL BE PERMITTED FROM THE LATCH SIDE STOP.

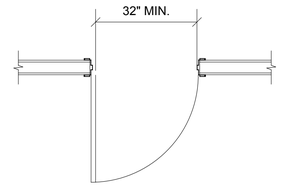

(A) HINGE DOOR

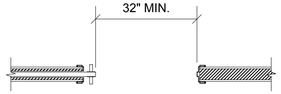

(B) SLIDING DOOR

CLEAR WIDTH OF OPENINGS

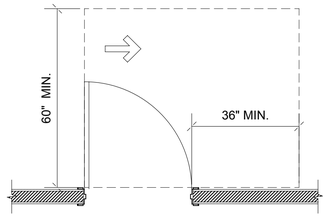

HINGE APPROACH, PULL SIDE

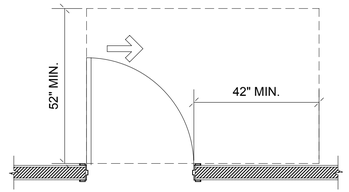

HINGE APPROACH, PULL SIDE

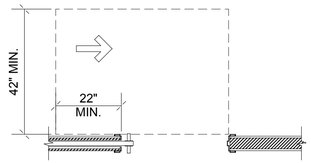

POCKET OR HINGE APPROACH

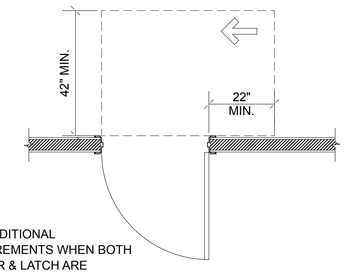

SEE ADDITIONAL REQUIREMENTS WHEN BOTH CLOSER & LATCH ARE PROVIDED PER FIGURE 404.2.3.2 (ON THIS SHEET)

HINGE APPROACH, PUSH SIDE

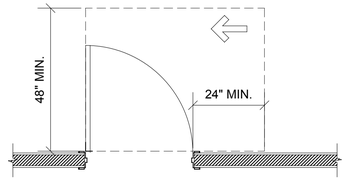

SEE ADDITIONAL REQUIREMENTS WHEN BOTH CLOSER & LATCH ARE PROVIDED PER FIGURE 404.2.3.2 (ON THIS SHEET)

LATCH APPROACH, PULL SIDE

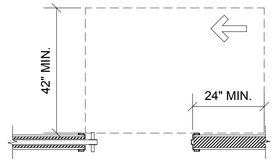

STOP OR LATCH APPROACH

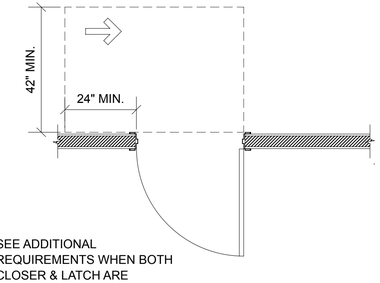

SEE ADDITIONAL REQUIREMENTS WHEN BOTH CLOSER & LATCH ARE PROVIDED PER FIGURE 404.2.3.2 (ON THIS SHEET)

LATCH APPROACH, PUSH SIDE

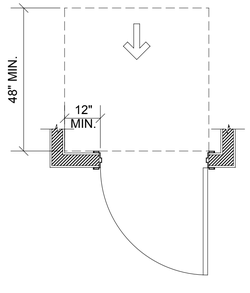

PUSH SIDE, W/ CLOSER & LATCH

TABLE 404.2.3.2—MANEUVERING CLEARANCES AT MANUAL SWINGING DOORS

TYPE OF USE		MANEUVERING CLEARANCES AT MANUAL SWINGING DOORS	
Approach Direction	**Door Side**	**Perpendicular to Doorway**	**Parallel to Doorway (beyond latch unless noted)**
From front	Pull	60 inches (1525 mm)	18 inches (455 mm)
From front	Push	48 inches (1220 mm)	0 inches (0 mm)[3]
From hinge side	Pull	60 inches (1525 mm)	36 inches (915 mm)
From hinge side	Pull	54 inches (1370 mm)	42 inches (1065 mm)
From hinge side	Push	42 inches (1065 mm)[1]	22 inches (560 mm)[3 & 4]
From latch side	Pull	48 inches (1220 mm)[2]	24 inches (610 mm)
From latch side	Push	42 inches (1065 mm)[2]	24 inches (610 mm)

[1]Add 6 inches (150 mm) if closer and latch provided.
[2]Add 6 inches (150 mm) if closer provided.
[3]Add 12 inches (305 mm) beyond latch if closer and latch provided.
[4]Beyond hinge side.

1 ACCESSIBLE DOOR CLEARANCE
SCALE: 1/2" = 1'-0"

S9
SYNTHESIS 9, LLC
523 N. D ST.
TACOMA, WA 98403

REUSE OF DOCUMENTS
THIS DOCUMENT AND THE IDEAS AND DESIGNS INCORPORATED HERIN, AS INSTRUMENTS OF PROFESSIONAL SERVICE, ARE THE PROPERTY OF SYNTHESIS 9, LLC AND ARE NOT TO BE USED OR REPRODUCED IN WHOLE, OR IN PART, WITHOUT THE WRITTEN AUTHORIZATION OF SYNTHESIS 9, LLC.

REGISTERED ARCHITECT
9251
BRETT LEVI WINDOM
STATE OF WASHINGTON

PRCNC20250692

City of Puyallup
Development & Permitting Services
ISSUED PERMIT
Building | Planning
Engineering | Public Works
Fire | Traffic

EAST TOWN CROSSING
CLUBHOUSE with MANAGER'S APARTMENT
3002 E Pioneer Way PUYALLUP WA 98372
P/N: 042026405

AGENCY REVIEW | REVISION No.2 | 25.07.25

REVISIONS
01 RESPONSE TO 1st COMMENTS: 25/06/24
02 RESPONSE TO 2nd COMMENTS: 25/07/21

REVISIONS

DRAWN BY: BL / CM
CHECKED BY: BL
DATE: 25.07.25
TITLE: DOOR CLEARANCE
PROJECT # : 2016
SHEET: A4.1

ACCESSIBLE FIXTURES

AMBULATORY ACCESSIBLE TOILET

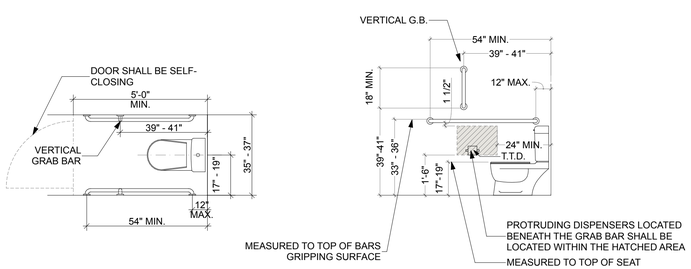

DRINKING FOUNTAINS

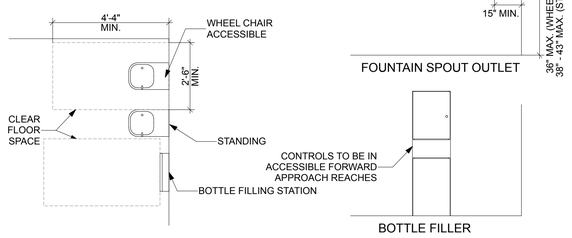

ACCESSIBLE CLEAR FLOOR SPACE & TURNING SPACE DIMENSIONS

01

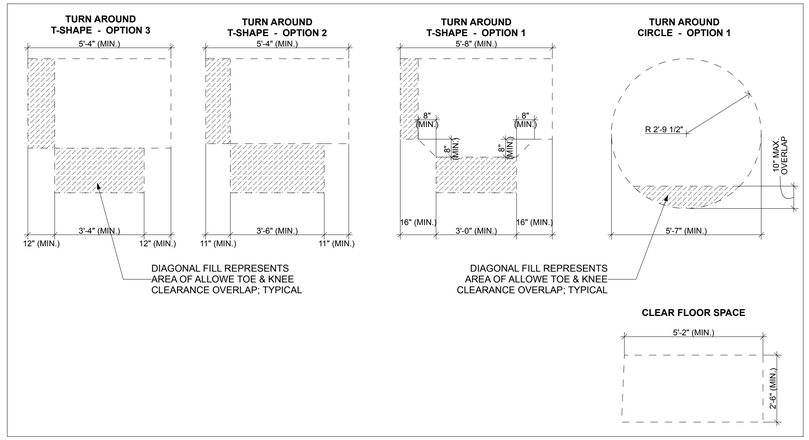

ACCESSIBLE TOILET

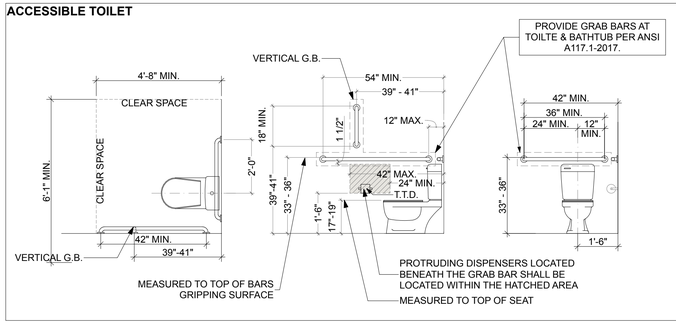

ROLL-IN-TYPE SHOWER

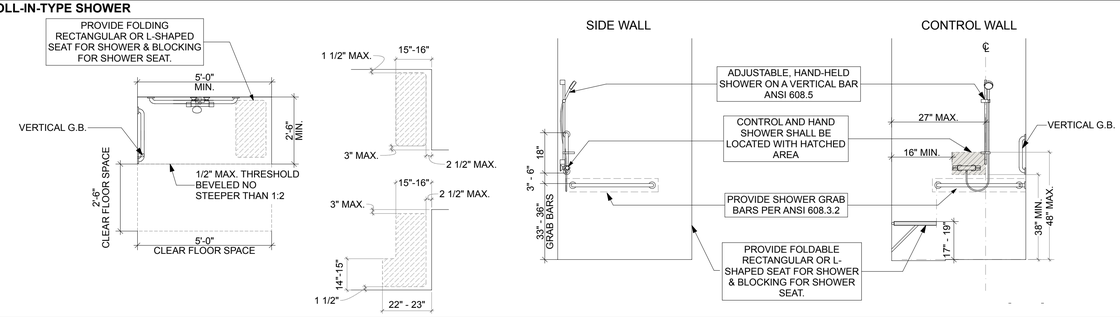

ACCESSIBLE SINK

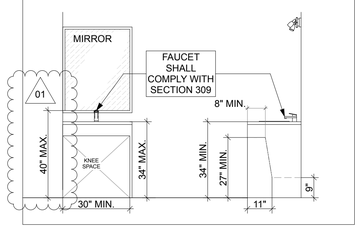

ACCESSIBLE SIGNAGE

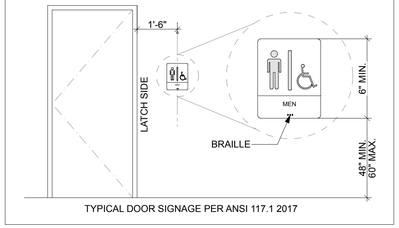

ACCESSIBLE FORWARD APPROACH REACHES

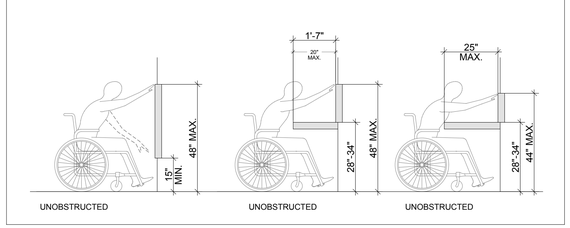

ACCESSIBLE PARALLEL APPROACH REACHES

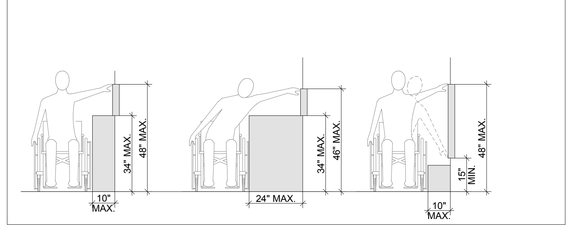

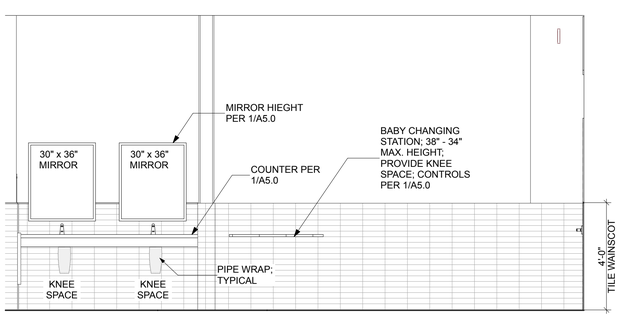

1 MENS RESTROOM - WEST
SCALE: 3/8" = 1'-0"

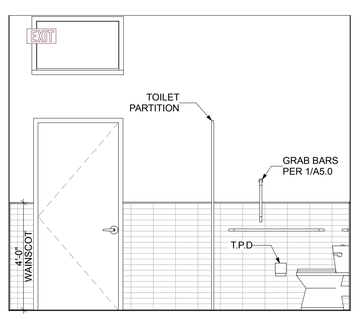

2 MENS RESTROOM - NORTH
SCALE: 3/8" = 1'-0"

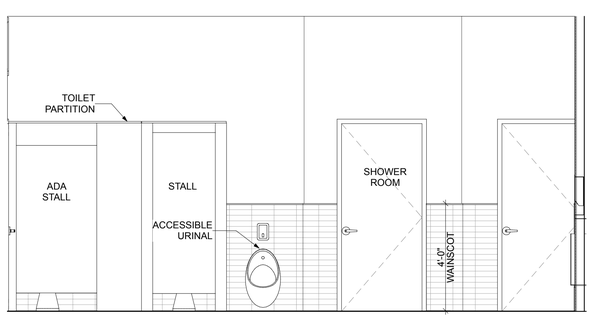

3 MENS RESTROOM - EAST
SCALE: 3/8" = 1'-0"

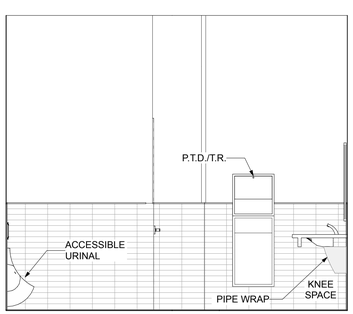

4 MENS RESTROOM - SOUTH
SCALE: 3/8" = 1'-0"

SYNTHESIS 9, LLC
523 N. D ST.
TACOMA, WA 98403

REUSE OF DOCUMENTS
THIS DOCUMENT AND THE IDEAS AND DESIGNS INCORPORATED HERIN, AS INSTRUMENTS OF PROFESSIONAL SERVICE, ARE THE PROPERTY OF SYNTHESIS 9, LLC AND ARE NOT TO BE USED OR REPRODUCED IN WHOLE, OR IN PART WITHOUT THE WRITTEN AUTHORIZATION OF SYNTHESIS 9, LLC.

REGISTERED ARCHITECT 9251 STATE OF WASHINGTON

PRCNC20250692

City of Puyallup Development & Permitting Services ISSUED PERMIT

Building	Planning
Engineering	Public Works
Fire	Traffic

EAST TOWN CROSSING

CLUBHOUSE with MANAGER'S APARTMENT
3002 E Pioneer Way PUYALLUP WA 98372
P/N: 0420264053

AGENCY REVIEW | REVISION No.2 | 25.07.25

REVISIONS

01	RESPONSE TO 1st COMMENTS: 25/06/24
02	RESPONSE TO 2nd COMMENTS: 25/07/21

REVISIONS

DRAWN BY:	BL / CM
CHECKED BY:	BL
DATE:	25.07.25
TITLE:	INTERIOR ELEVATIONS
PROJECT # :	2016
SHEET:	A5.0

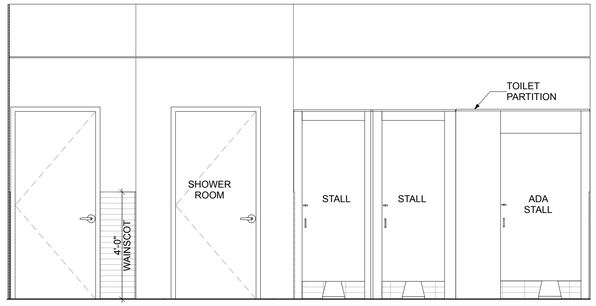

1 WOMENS RESTROOM - WEST
SCALE: 3/8" = 1'-0"

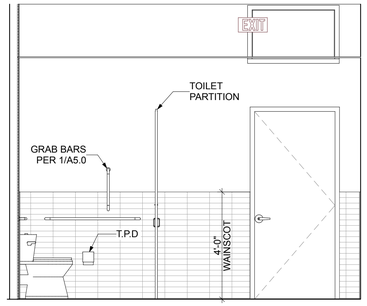

2 WOMENS RESTROOM - NORTH
SCALE: 3/8" = 1'-0"

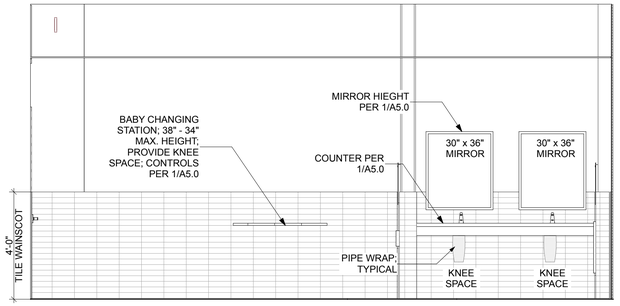

3 WOMENS RESTROOM - EAST
SCALE: 3/8" = 1'-0"

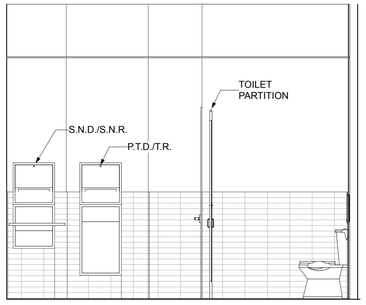

4 WOMENS RESTROOM - SOUTH
SCALE: 3/8" = 1'-0"

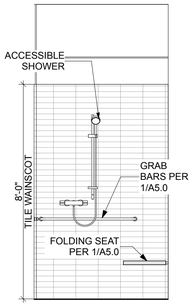

5 WOMENS SHOWER - WEST
SCALE: 3/8" = 1'-0"

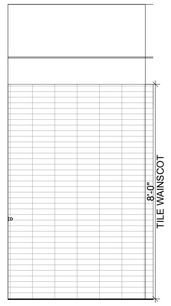

6 WOMENS SHOWER - NORTH
SCALE: 3/8" = 1'-0"

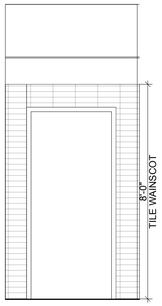

7 WOMENS SHOWER - EAST
SCALE: 3/8" = 1'-0"

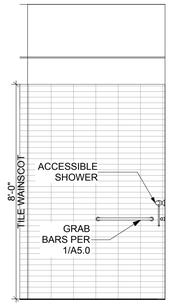

8 WOMENS SHOWER - SOUTH
SCALE: 3/8" = 1'-0"

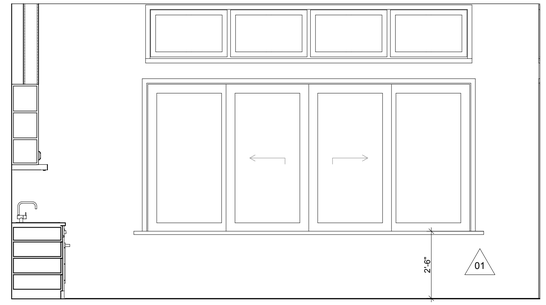

10 GATHERING 106 - NORTH
SCALE: 3/8" = 1'-0"

9 GATHERING 106 - WEST
SCALE: 3/8" = 1'-0"

11 GATHERING 106 - EAST
SCALE: 3/8" = 1'-0"

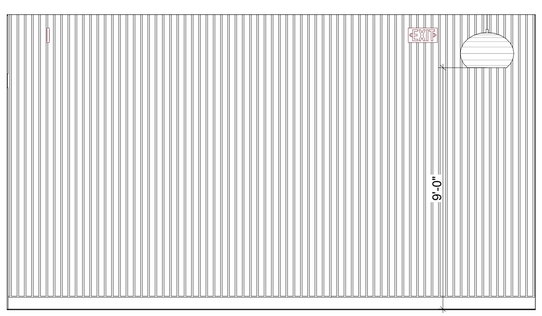

12 GATHERING 106 - SOUTH
SCALE: 3/8" = 1'-0"

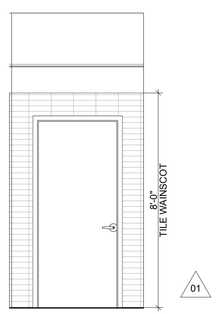

13 MENS SHOWER - WEST
SCALE: 3/8" = 1'-0"

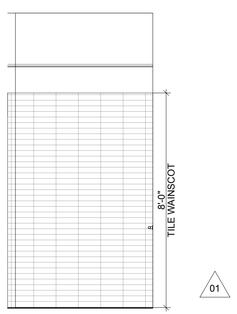

14 MENS SHOWER - NORTH
SCALE: 3/8" = 1'-0"

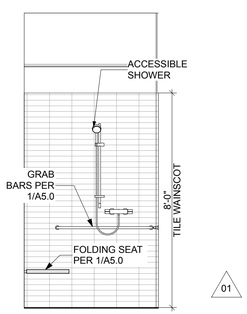

15 MENS SHOWER - EAST
SCALE: 3/8" = 1'-0"

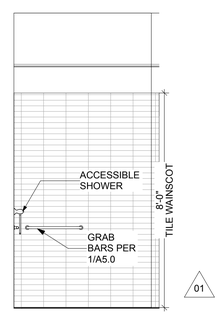

16 MENS SHOWER - SOUTH
SCALE: 3/8" = 1'-0"

S9
SYNTHESIS 9, LLC
523 N. D ST.
TACOMA, WA 98403

REUSE OF DOCUMENTS
THIS DOCUMENT AND THE IDEAS AND DESIGNS INCORPORATED HERIN, AS INSTRUMENTS OF PROFESSIONAL SERVICE, ARE THE PROPERTY OF SYNTHESIS 9, LLC AND ARE NOT TO BE USED OR REPRODUCED IN WHOLE OR IN PART WITHOUT THE WRITTEN AUTHORIZATION OF SYNTHESIS 9, LLC.

REGISTERED ARCHITECT
BRETT L. LYNCH
STATE OF WASHINGTON
9251

PRCNC20250692

City of Puyallup
Development & Permitting Services
ISSUED PERMIT
Building | Planning
Engineering | Public Works
Fire | Traffic

EAST TOWN CROSSING
CLUBHOUSE with MANAGER'S APARTMENT
3002 E Pioneer Way PUYALLUP WA 98372
P/N: 0420264053

AGENCY REVIEW | REVISION No.2 | 25.07.25

REVISIONS

01	RESPONSE TO 1st COMMENTS: 25/06/24
02	RESPONSE TO 2nd COMMENTS: 25/07/21

REVISIONS

DRAWN BY:	BL / CM
CHECKED BY:	BL
DATE:	25.07.25
TITLE:	INTERIOR ELEVATIONS
PROJECT # :	2016
SHEET:	A5.1

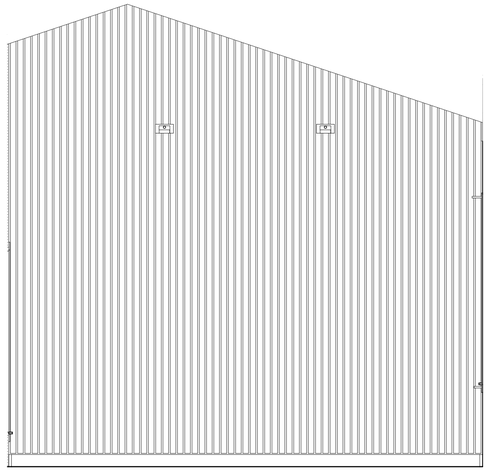

4 MEETING 103 - WEST
SCALE: 3/8" = 1'-0"

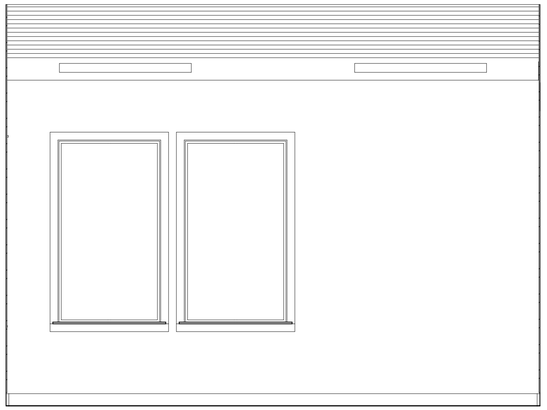

3 MEETING 103 - NORTH
SCALE: 3/8" = 1'-0"

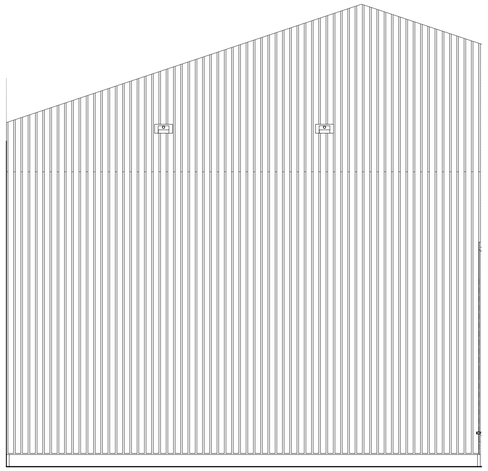

2 MEETING 103 - EAST
SCALE: 3/8" = 1'-0"

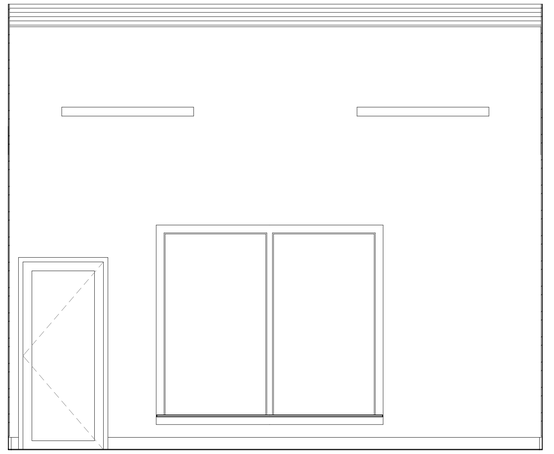

1 MEETING 103 - SOUTH
SCALE: 3/8" = 1'-0"

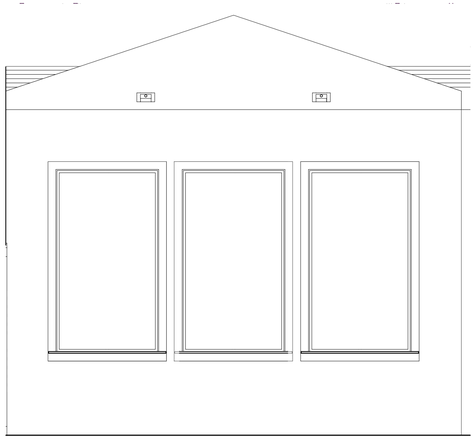

7 EXERCISE 102 - SOUTH
SCALE: 3/8" = 1'-0"

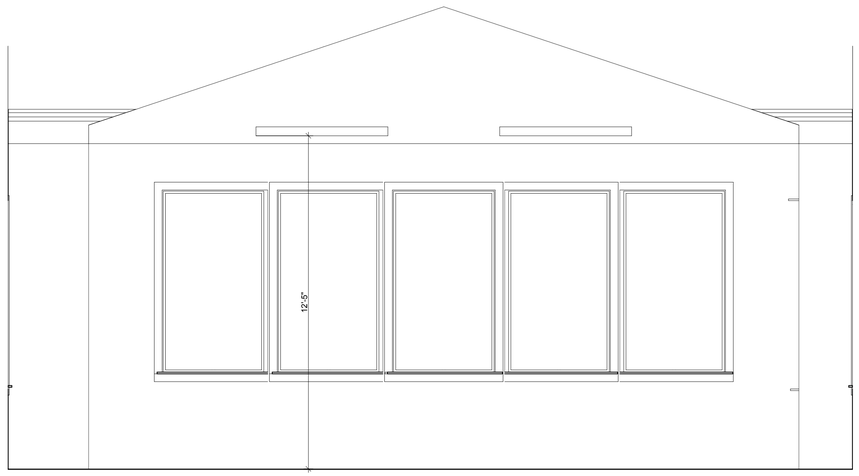

6 EXERCISE 102 - WEST
SCALE: 3/8" = 1'-0"

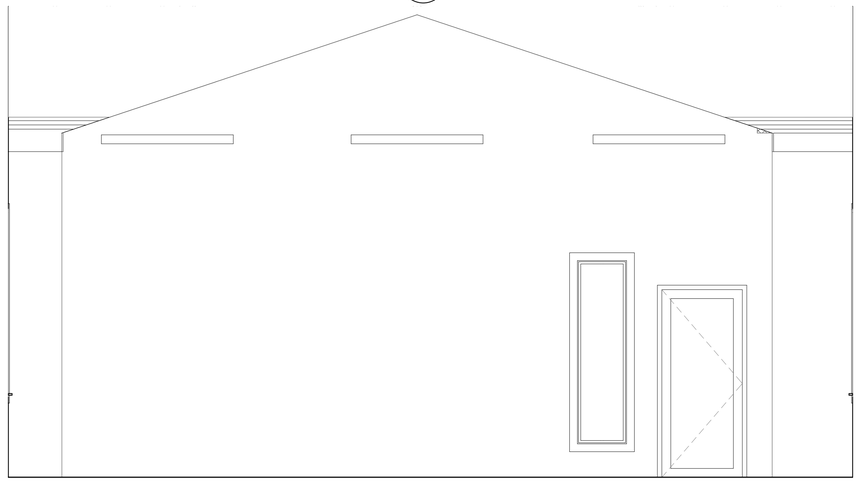

5 EXERCISE 102 - EAST
SCALE: 3/8" = 1'-0"

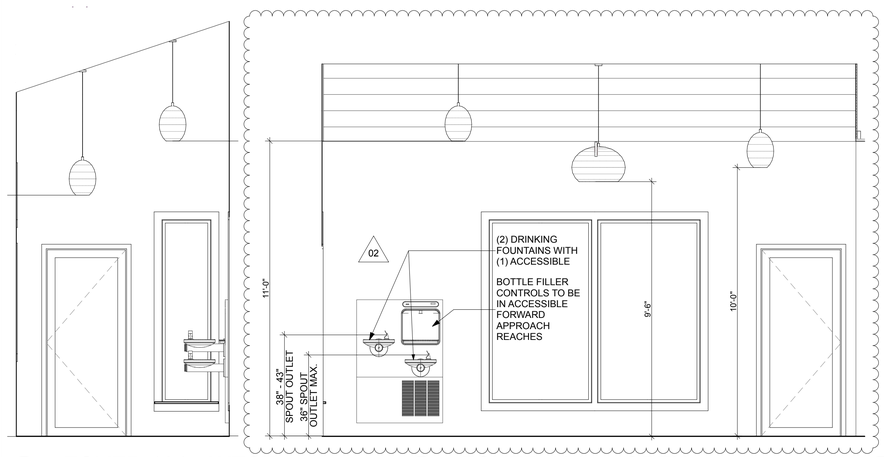

12 FOYER 101 - WEST
SCALE: 3/8" = 1'-0"

11 FOYER 101 - NORTH
SCALE: 3/8" = 1'-0"

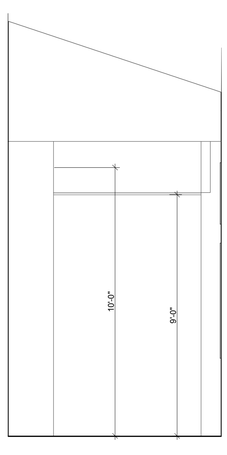

10 FOYER 101 - EAST
SCALE: 3/8" = 1'-0"

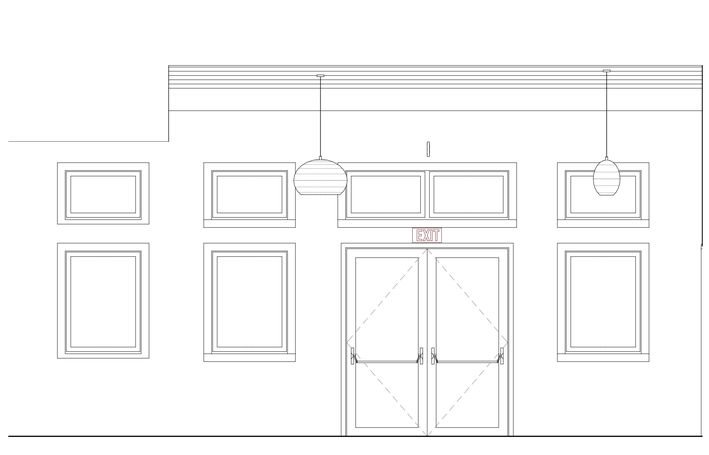

9 FOYER 101 - SOUTH
SCALE: 3/8" = 1'-0"

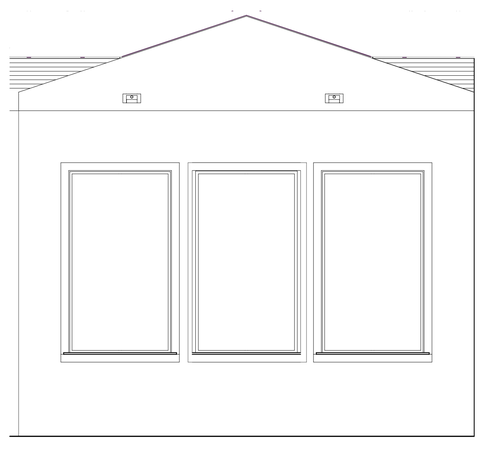

8 EXERCISE 102 - NORTH
SCALE: 3/8" = 1'-0"

S9
SYNTHESIS 9, LLC
523 N. D ST.
TACOMA, WA 98403

REUSE OF DOCUMENTS
THIS DOCUMENT AND THE IDEAS AND DESIGNS INCORPORATED HERIN, AS INSTRUMENTS OF PROFESSIONAL SERVICE, ARE THE PROPERTY OF SYNTHESIS 9, LLC AND ARE NOT TO BE USED OR REPRODUCED IN WHOLE, OR IN PART, WITHOUT THE WRITTEN AUTHORIZATION OF SYNTHESIS 9, LLC.

REGISTERED ARCHITECT
9251
MARTIN LEE WOOLSTON
STATE OF WASHINGTON

PRCNC20250692

City of Puyallup
Development & Planning Services
ISSUED PERMIT
Building | Planning
Engineering | Public Works
Fire | Traffic

EAST TOWN CROSSING
CLUBHOUSE with MANAGER'S APARTMENT
3002 E Pioneer Way PUYALLUP WA 98372
P/N: 0420264053

AGENCY REVIEW | REVISION No.2 | 25.07.25

REVISIONS
01 RESPONSE TO 1st COMMENTS: 25/06/24
02 RESPONSE TO 2nd COMMENTS: 25/07/21

REVISIONS

DRAWN BY: BL / CM
CHECKED BY: BL
DATE: 25.07.25
TITLE: INTERIOR ELEVATIONS
PROJECT #: 2016
SHEET: A5.2

FOUNDATION DETAIL REFERENCE NOTES

01 WALL PER PLAN

02 VAPOR PERMEABLE AIR BARRIER / W.R.B. FIELD MEMBRANE

03 CONTINUOUS, SELF-ADHERED MEMBRANE (S.A.M.) ALONG TOP EDGE OF METAL FLASHING

04 BELOW GRADE WATER-PROOFING SYSTEM W/ DRAINAGE MAT AND FILTER FABRIC PROTECTION LAYER

05 22 GAUGE, SHEET METAL FLASHING, W/ HEMMED EDGE; SET ON SEALANT & EXTEND 6" UP UNDER W.R.B. OR TO WINDOW OPENING

06 FILTER FABRIC OVER MINIMUM 1/2-INCH DRAINAGE MATRIX

07 METAL LATHE WITH BOND & SCRATCH COAT

08 NOT USED

09 6 MIL PLASTIC VAPOR BARRIER

10 NOT USED

11 R-10 POLYISO INSULATION; UNDER ENTIRE SLAB AT CONDITIONED AREAS AND CONFIGURED AS SHOWN TO TOP OF FOOTING OR 2-FT IN LENGTH.

12 NOT USED

13 CEMENT FIBERBOARD PANEL OR LAP-SIDING SIDING - HARDIE PANEL OR APPROVED SUBSTITUTE

14 NOT USED

15 NOT USED

16 ANCHOR BOLT & TREATED SILL PLATE(S) PER STRUCTURAL

17 CONCRETE & REINFORCING PER STRUCTURAL (TYPICAL)

18 12-INCH WIDE GRACE VYCOR SILL PAN / FLASHING W/ END DAMS. AT EACH SILL CORNER, INSTALL VYCORNERS AND CORNER PATCHES PER THE MFR'S RECOMMENDATIONS; WRAP UP THE STEEL ANGLE TO CREATE A DAM.

19 CONT. BACK DAM ANGLE, MIN. 1-INCH TALL WITH VINYL ASSEMBLY FASTENED THROUGH ANGLE PER MFR. RECOMMENDATIONS.

20 4" PERF. FOOTING DRAIN AND 4" TIGHT-LINE DRAIN; SET IN DRAIN ROCK AND WRAP IN FILTER FABRIC; SEE CIVIL DRAWINGS FOR RELATED INFORMATION

21 3/8" SEALANT JOINT WITH BACKER ROD.

22 PRIMED COUNTER-FLASHING ABOVE TRIM; PROVIDE 1/4-INCH PER FOOT SLOPE TO HEMMED EDGE

23 GALV. METAL SILL PAN AT ANY DOOR WITH A THRESHOLD

24 VINYL WINDOW FRAME W/ FLANGE

25 PRIMED COUNTER-FLASHING ABOVE TRIM; PROVIDE 1/4-INCH PER FOOT SLOPE TO HEMMED EDGE

26 INSTALL PLASTIC HORSESHOE SHIMS @ EACH SILL FLANGE FASTENER

27 1/4-INCH WITH CAULK (ONE PART URETHANE SEALANT)

28 VYCOR-PLUS BY GRACE AT MUD SILL W/ 1/4-INCH DOWNTURN ON EXTERIOR SIDE WHEN FEASIBLE

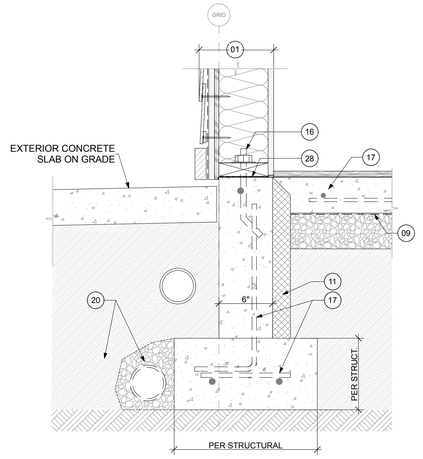

3 FOUNDATION DETAIL - 03
SCALE: 1 1/2"= 1'-0"

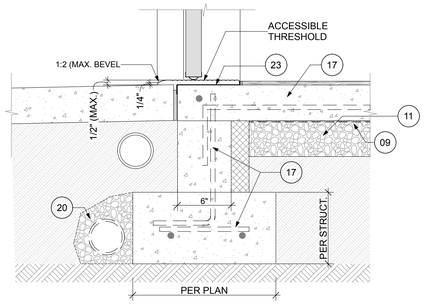

2 FOUNDATION DETAIL - 02
SCALE: 1 1/2"= 1'-0"

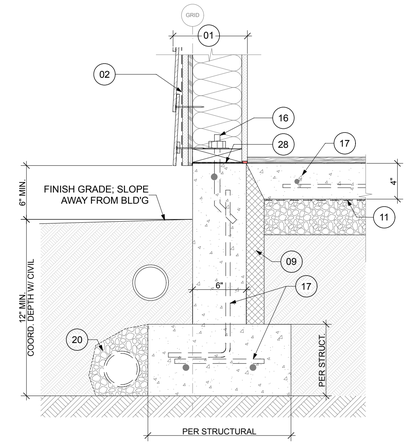

1 FOUNDATION DETAIL - 01
SCALE: 1 1/2"= 1'-0"

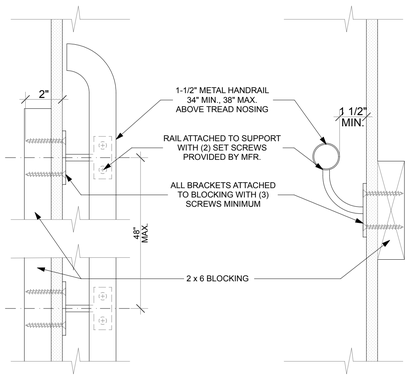

5 TYPICAL HANDRAIL PLAN & SECTION
SCALE: 3" = 1'-0"

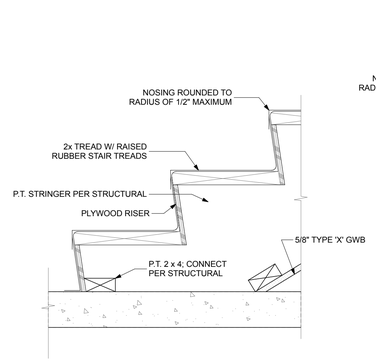

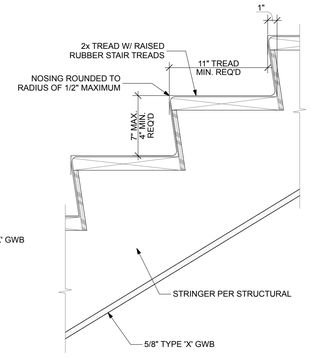

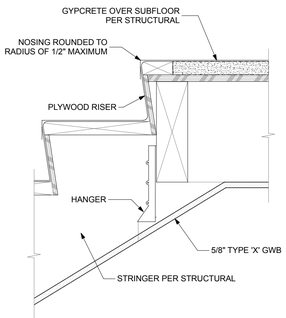

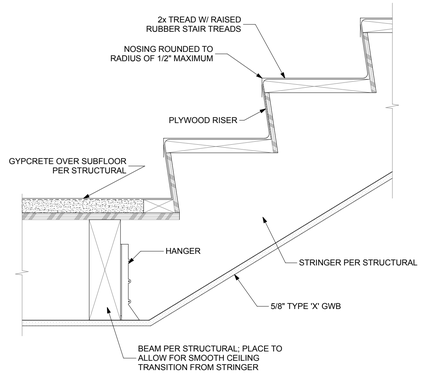

4 TYPICAL STAIR DETAILS
SCALE: 1 1/2"= 1'-0"

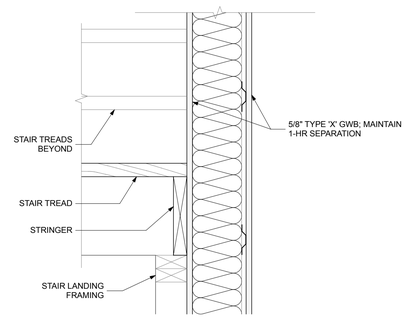

6 STAIR @ SEPARATION WALL
SCALE: 1 1/2"= 1'-0"

S9
SYNTHESIS 9, LLC
523 N. D ST.
TACOMA, WA 98403

REUSE OF DOCUMENTS
THIS DOCUMENT AND THE IDEAS AND DESIGNS INCORPORATED HERIN, AS INSTRUMENTS OF PROFESSIONAL SERVICE, ARE THE PROPERTY OF SYNTHESIS 9, LLC AND ARE NOT TO BE USED OR REPRODUCED IN WHOLE OR IN PART WITHOUT THE WRITTEN AUTHORIZATION OF SYNTHESIS 9, LLC.

REGISTERED ARCHITECT 9251 BRIAN T. LEVY STATE OF WASHINGTON

PRCNC20250692

City of Puyallup
Development & Permitting Services
ISSUED PERMIT
Building | Planning
Engineering | Public Works
Fire | Traffic

EAST TOWN CROSSING
CLUBHOUSE with MANAGER'S APARTMENT
3002 E Pioneer Way PUYALLUP WA 98372
P/N: 0420264053

AGENCY REVIEW | REVISION No.2 | 25.07.25

REVISIONS

01	RESPONSE TO 1st COMMENTS:	25/06/24
02	RESPONSE TO 2nd COMMENTS:	25/07/21

REVISIONS

DRAWN BY:	BL / CM
CHECKED BY:	BL
DATE:	25.07.25
TITLE:	DETAILS
PROJECT # :	2016
SHEET:	A6.0

System No. W-L-1054

WL 1054

Classified by Underwriters Laboratories, Inc. to UL 1479 and CAN/ULC-S115

ANSI/UL1479 (ASTM E814)	CAN/ULC S115
F Ratings —1 and 2 Hr (See Items 1 and 3)	F Ratings — 1 and 2 Hr (See Items 1 and 3)
T Rating — 0 Hr	FT Rating — 0 Hr
L Rating at Ambient — Less Than 1 CFM/sq ft	FH Ratings —1 and 2 Hr (See Items 1 and 3)
L Rating at 400 F — Less Than 1 CFM/sq ft	FTH Rating — 0 Hr
	L Rating at Ambient — Less Than 1 CFM/sq ft
	L Rating at 400 F — Less Than 1 CFM/sq ft

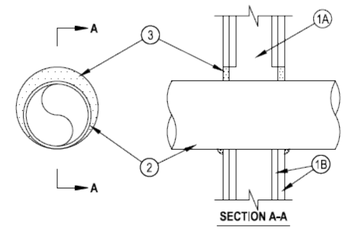

SECTION A-A

1. Wall Assembly — The 1 or 2 hr fire-rated gypsum wallboard/stud wall assembly shall be constructed of the materials and in the manner specified in the individual U300 or U400 Series Wall and Partition Designs in the UL Fire Resistance Directory and shall include the following construction features:
   A. Studs — Wall framing may consist of either wood studs or steel channel studs. Wood studs to consist of nom 2 by 4 in. (51 by 102 mm) lumber spaced 16 in. (406 mm) OC. Steel studs to be min 2-1/2 in. (64 mm) wide and spaced max 24 in. (610 mm) OC. When steel studs are used and the diam of opening exceeds the width of stud cavity, the opening shall be framed on all sides using lengths of steel stud installed between the vertical studs and screw-attached to the steel studs at each end. The framed opening in the wall shall be 4 to 6 in. (102 to 152 mm) wider and 4 to 6 in. (102 to 152 mm) higher than the diam of the penetrating item such that, when the penetrating item is installed in the opening, a 2 to 3 in. (51 to 76 mm) clearance is present between the penetrating item and the framing on all four sides.
   B. Gypsum Board* — 5/8 in. (16 mm) thick, 4 ft (122 cm) wide with square or tapered edges. The gypsum board type, thickness, number of layers, fastener type and sheet orientation shall be as specified in the individual U300 or U400 Series Design in the UL Fire Resistance Directory. Max diam of opening is 32-1/4 in. (819 mm) for steel stud walls. Max diam of opening is 14-1/2 in. (368 mm) for wood stud walls.

The F and FH Ratings of the firestop system are equal to the fire rating of the wall assembly.

Hilti Firestop Systems

Reproduced by HILTI, Inc. Courtesy of Underwriters Laboratories, Inc, October 14, 2015

Page: 1 of 2

System No. W-L-1054

WL 1054

2. Through-Penetrants — One metallic pipe, conduit or tubing to be installed either concentrically or eccentrically within the firestop system. The annular space shall be min 0 in. to max 2-1/4 in. (57 mm). Pipe may be installed with continuous point contact. Pipe, conduit or tubing to be rigidly supported on both sides of wall assembly. The following types and sizes of metallic pipes, conduits or tubing may be used:
   A. Steel Pipe — Nom 30 in. (762 mm) diam (or smaller) Schedule 10 (or heavier) steel pipe.
   B. Iron Pipe — Nom 30 in. (762 mm) diam (or smaller) cast or ductile iron pipe.
   C. Conduit — Nom 4 in. (102 mm) diam (or smaller) steel electrical metallic tubing or 6 in. (152 mm) . diam steel conduit.
   D. Copper Tubing — Nom 6 in. (152 mm) diam (or smaller) Type L (or heavier) copper tubing.
   E. Copper Pipe — Nom 6 in. (152 mm) diam (or smaller) regular (or heavier) copper pipe.
3. Fill, Void or Cavity Material* — Sealant — Min 5/8 in. (16 mm) thickness of fill material applied within the annulus, flush with both surfaces of wall. At the point or continuous contact locations between pipe and wall, a min 1/2 in. (13 mm) diam bead of fill material shall be applied at the pipe wall interface on both surfaces of wall.
   HILTI CONSTRUCTION CHEMICALS, DIV OF HILTI INC — FS-One Sealant or FS-ONE MAX Intumescent Sealant

* Indicates such products shall bear the UL or cUL Certification Mark for jurisdictions employing the UL or cUL Certification (such as Canada), respectively.

Hilti Firestop Systems

Reproduced by HILTI, Inc. Courtesy of Underwriters Laboratories, Inc, October 14, 2015

Page: 2 of 2

1 FIRE RATED PENETRATIONS
SCALE: 1 1/2"= 1'-0"

System No. F-C-1009

FC 1009

Classified by Underwriters Laboratories, Inc. to UL 1479 and CAN/ULC-S115

ANSI/UL1479 (ASTM E814)	CAN/ULC S115
F Rating — 1 and 2 Hr (See Item 1)	F Rating — 1 and 2 Hr (See Item 1)
T Rating — 1/4 Hr	FT Rating — 1/4 Hr
L Rating At Ambient — Less Than 1 CFM/sq ft	FH Rating — 1 and 2 Hr (See Item 1)
L Rating At 400 F — 4 CFM/sq ft	FTH Rating — 1/4 Hr
	L Rating At Ambient — Less Than 1 CFM/sq ft
	L Rating At 400 F — 4 CFM/sq ft

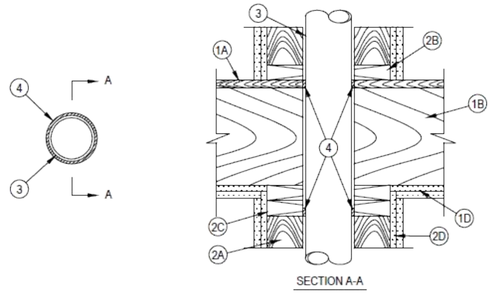

SECTION A-A

1. Floor-Ceiling Assembly — The 1 or 2 hr fire-rated solid or trussed lumber joist floor-ceiling assembly shall be constructed of the materials and in the manner specified in the individual L500 Series Floor-Ceiling Designs in the UL Fire Resistance Directory. The F Rating of the firestop system is equal to the rating of the floor-ceiling assembly. The general construction features of the floor-ceiling assembly are summarized below:
   A. Flooring System — Lumber or plywood subfloor with finish floor of lumber, plywood or Floor Topping Mixture* as specified in the individual Floor-Ceiling Design. Diam of opening to be max 1 in. (25 mm) larger than diam of pipe. As an alternate, the opening may be square-cut with a max dimension 1 in. (25 mm) greater than the diam of the pipe.
   B. Wood Joists* — Nom 10 in. (254 mm) deep (or deeper) lumber, steel or combination lumber and steel joists, trusses or Structural Wood Members* with bridging as required and with ends firestopped.
   C. Furring Channels — (Not Shown) —(As required.) Resilient galvanized steel furring installed in accordance with the manner specified in the individual L500 Series Designs in the Fire Resistance Directory.
   D. Gypsum Board* — Thickness, type, number of layers and fasteners shall be as specified in the individual Floor-Ceiling Design. Diam of opening to be max 1 in. (25 mm) larger than diam of pipe.

Hilti Firestop Systems

Reproduced by HILTI, Inc. Courtesy of Underwriters Laboratories, Inc. January 15, 2015

Page: 1 of 2

System No. F-C-1009

FC 1009

2. Chase Wall — (Optional) - The through penetrant (Item 3) may be routed through a 1 or 2 hr fire-rated single, double or staggered wood stud/gypsum board chase wall having a fire rating consistent with that of the floor-ceiling assembly. Depth of chase wall to be min 1 in. greater than the diameter of the through penetrant. The chase wall shall be constructed of the materials and in the manner specified in the individual U300 Series Wall and Partition Designs in the UL Fire Resistance Directory and shall include the following construction features:
   A. Studs — Nom 2 by 4 in. (51 by 102 mm), 2 by 6 in. (51 by 152 mm) or double nom 2 by 4 in. (51 by 102 mm) lumber studs. Nom 2 by 4 in. (51 by 102 mm) studs are allowed for through-penetrants (Item 3) not exceeding nom 2 in. (51 mm) diam.
   B. Sole Plate — Nom 2 by 4 in. (51 by 102 mm), 2 by 6 in. (51 by 152 mm) or parallel 2 by 4 in. (51 by 102 mm) lumber plates, tightly butted. Diam of opening is to be max 1 in. (925 mm) larger than diam of pipe. As an alternate, the opening may be square-cut with a max dimension 1 in. (25 mm) greater than the diam of the pipe. Plates may be discontinuous over opening, terminating at two opposing edges of opening. Max length of discontinuity to be 1 in. (25 mm) greater than diam of through penetrant.
   C. Top Plate — The double top plate shall consist of two nom 2 by 4 in. (51 by 102 mm), 2 by 6 in. (51 by 152 mm) or two sets of parallel 2 by 4 in. (51 by 102 mm) lumber plates, tightly butted. Diam of opening is to be max 1 in. (25 mm) larger than diam of pipe. As an alternate, the opening may be square-cut with a max dimension 1 in. (25 mm) greater than the diam of the pipe. Plates may be discontinuous over opening, terminating at two opposing edges of opening. Max length of discontinuity to be 1 in. (25 mm) greater than diam of through penetrant.
   D. Steel Plate — When lumber plates are discontinuous, nom 1-1/2 in. (38 mm) wide No. 20 gauge (or heavier) galv steel plates shall be installed to connect each discontinuous lumber plate and to provide a form for the fill material. Steel plates sized to lap 2 in. (51 mm) onto each discontinuous lumber plate and secured to lumber plates with steel screws or nails.
   E. Gypsum Board* — Thickness, type, number of layers and fasteners shall be as specified in individual Wall and Partition Design.
3. Through Penetrants — One metallic pipe, conduit or tubing to be installed within the firestop system. Pipe, conduit or tubing to be rigidly supported on both sides of floor assembly. The annular space within the firestop system shall be min 0 in. (point contact) to max 1 in. (25 mm). The following types and sizes of metallic pipes or conduits may be used:
   A. Steel Pipe — Nom 4 in. (102 mm) diam (or smaller) Schedule 10 (or heavier) steel pipe.
   B. Iron Pipe — Nom 4 in. (102 mm) diam (or smaller) cast or ductile iron pipe.
   C. Conduit — Nom 4 in. (102 mm) diam (or smaller) steel electrical metallic tubing or steel conduit.
   D. Copper Tubing — Nom (102 mm) 4 in. diam (or smaller) Type L (or heavier) copper tubing.
   E. Copper Pipe — Nom (102 mm) 4 in. diam (or smaller) Regular (or heavier) copper pipe.
4. Fill, Void or Cavity Material* — Sealant — Min 3/4 in. (19 mm) thickness of fill material applied within the annulus, flush with the top surface of the floor or the sole plate. Min 5/8 in. (16 mm) thickness of fill material applied within the annulus, flush with bottom surface of ceiling or lower top plate.
   HILTI CONSTRUCTION CHEMICALS, DIV OF HILTI INC — CP601S, CFS-S SIL GG, CP606, FS-One Sealant or FS-ONE MAX Intumescent Sealant (Note: L Ratings apply only when FS-ONE Sealant is used.)

* Indicates such products shall bear the UL or cUL Certification Mark for jurisdictions employing the UL or cUL Certification (such as Canada), respectively.

Hilti Firestop Systems

Reproduced by HILTI, Inc. Courtesy of Underwriters Laboratories, Inc. January 15, 2015

Page: 2 of 2

System No. F-C-1059

FC 1059

Classified by Underwriters Laboratories, Inc. to UL 1479 and CAN/ULC-S115

ANSI/UL1479 (ASTM E814)	CAN/ULC S115
F Rating — 1 and 2 Hr	F Rating — 1 and 2 Hr
T Rating — 1 and 2 Hr	FT Rating — 1 and 2 Hr
L Rating At Ambient — Less Than 1 CFM/sq ft	FH Rating — 1 and 2 Hr
L Rating At 400 F — 4 CFM/sq ft	FTH Rating — 1 and 2 Hr
W Rating — Class 1 (See Item 4)	L Rating At Ambient — Less Than 1 CFM/sq ft
	L Rating At 400 F — 4 CFM/sq ft

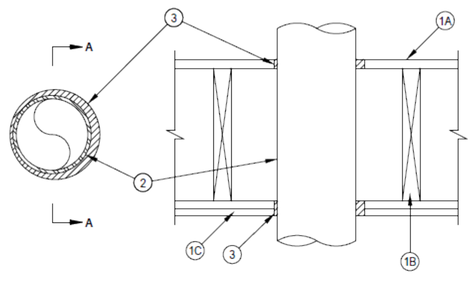

SECTION A-A

1. Floor-Ceiling Assembly — The 1 or 2 hr fire-rated solid or trussed lumber joist floor-ceiling assembly shall be constructed of the materials and in the manner specified in the individual L500 Series Floor-Ceiling Designs in the UL Fire Resistance Directory. The F, FH Rating of the firestop system is equal to the rating of the floor-ceiling and wall assemblies. The T, FT and FTH Rating of the firestop system is 0 hr for 1 hr rated floor ceiling assembly and 1/2 hr for 2 hr rated floor ceiling assembly. The general construction features of the floor-ceiling assembly are summarized below:
   A. Flooring System — Lumber or plywood subfloor with finish floor of lumber, plywood or Floor Topping Mixture* as specified in the individual Floor-Ceiling Design. Max diam of opening shall be 7-5/8 in. (194 mm).
   B. Wood Joists* — Nom 10 in (254 mm) deep (or deeper) lumber, steel or combination lumber and steel joists, trusses or Structural Wood Members* with bridging as required and with ends firestopped.
   C. Gypsum Board* — Thickness, type, number of layers and fasteners shall be as specified in the individual Floor-Ceiling Design. Max diam of opening shall be 7-5/8 in. (194 mm).
   D. Furring Channels — (Not Shown) (As required) Resilient galvanized steel furring installed in accordance with the manner specified in the individual L500 Series Designs in the Fire Resistance Directory.

Hilti Firestop Systems

Reproduced by HILTI, Inc. Courtesy of Underwriters Laboratories, Inc. January 15, 2015

Page: 1 of 2

System No. F-C-1059

FC 1059

1.1 Chase Wall — (Not Shown, Optional)—The through penetrants (Item 2) may be routed through a 1 or 2 hr fire-rated single, double or staggered wood stud/gypsum wallboard chase wall having a fire rating consistent with that of the floor-ceiling assembly. The chase wall shall be constructed of the materials and in the manner specified in the individual U300 Series Wall and Partition Designs in the UL Fire Resistance Directory and shall include the following construction features :
   A. Studs — Nom 2 by 8 in. (51 by 203 mm) lumber or double nom 2 by 6 in. (51 by 152 mm) lumber studs.
   B. Sole Plate — Nom 2 by 8 in. (51 by 203 mm) lumber or parallel 2 by 6 in. (51 by 152 mm) lumber plates, tightly butted. Max diam of opening shall be 7-5/8 in. (194 mm).
   C. Top Plate — The double top plate shall consist of two nom 2 by 8 in. (51 by 203 mm) lumber plates or two sets of nom 2 by 6 in. (51 by 152 mm) lumber plates tightly butted. Max diam of opening is 7-5/8 in. (194 mm).
   D. Gypsum Board* — Thickness, type, number or layers and fasteners shall be as specified in individual Wall and Partition Designs.
2. Through Penetrants — One metallic tubing, pipe or conduit to be installed concentrically or eccentrically within the firestop system. Annular space between pipe or conduit and edge of opening to be min 1/4 in. (6 mm) and max 3/4 in. (19 mm). Pipe, tubing or conduit to be rigidly supported on both sides of floor-ceiling assembly. The following types and sizes of metallic pipes, tubing or conduit may be used:
   A. Steel Pipe — Nom 6 in. (152 mm) diam (or smaller) Schedule 40 (or heavier) steel pipe.
   B. Iron Pipe — Nom 6 in. (152 mm) diam (or smaller) cast or ductile pipe.
   C. Conduit — Nom 4 in. (102 mm) diam (or smaller) steel electrical metallic tubing or nom 6 in. diam (or smaller) steel conduit.
   D. Steel Flexible Metal Conduit + — Nom 2 in. (51 mm) diam (or smaller) steel flexible metal conduit.
      See Flexible Metal Conduit (DXUZ) category in the Electrical Construction Materials Directory for names of manufacturers.
3. Fill, Void or Cavity Material*—Sealant — Min 5/8 in. (16 mm) or 1-1/4 in. (32 mm) thickness of sealant applied within annular space, flush with the bottom surface of gypsum wallboard or lower top plate for 1 and 2 hr floors respectively. Min. 3/4 in. (19 mm) thickness of sealant applied within annular space, flush with top surface of floor or sole plate.
   HILTI INC — FS-ONE Sealant or FS-ONE MAX Intumescent Sealant

+Bearing the UL Listing Mark.

* Indicates such products shall bear the UL or cUL Certification Mark for jurisdictions employing the UL or cUL Certification (such as Canada), respectively.

Hilti Firestop Systems

Reproduced by HILTI, Inc. Courtesy of Underwriters Laboratories, Inc. January 15, 2015

Page: 2 of 2

2 FIRE RATED PENETRATIONS
SCALE: 1 1/2"= 1'-0"

S9
SYNTHESIS 9, LLC
523 N. D ST.
TACOMA, WA 98403

REUSE OF DOCUMENTS
THIS DOCUMENT AND THE IDEAS AND DESIGNS INCORPORATED HEREIN, AS AN INSTRUMENTS OF PROFESSIONAL SERVICE, ARE THE PROPERTY OF SYNTHESIS 9, LLC AND ARE NOT TO BE USED OR REPRODUCED IN WHOLE OR IN PART WITHOUT THE WRITTEN AUTHORIZATION OF SYNTHESIS 9, LLC.

REGISTERED ARCHITECT 9251 STATE OF WASHINGTON

PRCNC20250692

City of Puyallup Development & Permitting Services ISSUED PERMIT

Building	Planning
Engineering	Public Works
Fire	Traffic

EAST TOWN CROSSING
CLUBHOUSE with MANAGER'S APARTMENT
3002 E Pioneer Way PUYALLUP WA 98372
P/N: 042026405

AGENCY REVIEW I REVISION No.2 I 25.07.25

REVISIONS

01	RESPONSE TO 1st COMMENTS: 25/06/24
02	RESPONSE TO 2nd COMMENTS: 25/07/21

REVISIONS

DRAWN BY: BL / CM
CHECKED BY: BL
DATE: 25.07.25
TITLE: DETAILS
PROJECT # : 2016
SHEET:

A6.1

DESIGN CRITERIA

BUILDING CODE: 2021 INTERNATIONAL BUILDING CODE (IBC) AS AMENDED BY THE LOCAL JURISDICTION.
VERTICAL LOADS

ROOF LIVE LOAD:	25 PSF (SNOW)
ROOF DEAD LOAD:	20 PSF
RESIDENTIAL FLOOR LIVE LOAD:	40 PSF (REDUCIBLE) : 60 PSF (FOR DECKS)
FLOOR DEAD LOAD:	30 PSF (INCLUDES 1 ½" GYP TOPPING)

SNOW DESIGN DATA (ASCE 7-16)
FLAT SNOW LOAD: N/A
SNOW EXPOSURE FACTOR, Ce=1.0,
SNOW IMPORTANCE FACTOR, Is=1.0,
THERMAL FACTOR, Ct=1.1

WIND DESIGN DATA (ASCE 7-16)
BASIC WIND SPEED (ASD) V= 85MPH
ULTIMATE WIND SPEED V= 110MPH
RISK CATEGORY: II EXPOSURE: B
IMPORTANCE FACTOR, Iw= 1.0
TOPOGRAPHIC FACTOR, Kzt= 1.0

SEISMIC DESIGN DATA (ASCE7-16)
SEISMIC RESPONSE SYSTEM: WOOD SHEARWALLS
EQUIVALENT LATERAL FORCE PROCEDURE (ASCE 7-16)
RISK CATEGORY: II SEISMIC IMPORTANCE FACTOR, Ie= 1.0
MAPPED SPECTRAL RESPONSE ACCELERATION: Ss=1.24, S1=0.476
DESIGN SPECTRAL RESPONSE ACCELERATION: Sds=0.831, Sd1=0.476
SITE CLASS: D SEISMIC DESIGN CATEGORY: D
SEISMIC RESPONSE COEFFICIENT: Cs= 0.091
DESIGN BASE SHEAR: 21,805#
SOIL PROPERTIES:
BEARING CAPACITY: 2,000 PSF
LATERAL CAPACITY: 250 PSF/FT

GENERAL REQUIREMENTS

1. STRUCTURAL DRAWINGS SHALL BE USED IN CONJUNCTION WITH THE SPECIFICATIONS AND OTHER PROJECT DRAWINGS BY OTHER DISCIPLINES. ALL WORK SHALL CONFORM TO THE REQUIREMENTS OF THE CODES LISTED ABOVE.
2. CONTRACTOR SHALL VERIFY ALL DIMENSIONS AND ELEVATIONS RELATING TO EXISTING CONDITIONS BY MAKING FIELD SURVEYS AND MEASUREMENTS PRIOR TO COMMENCING FABRICATION OR CONSTRUCTION.
3. THE GENERAL CONTRACTOR SHALL ENSURE THAT ALL CONSTRUCTION METHODS USED WILL NOT CAUSE DAMAGE TO ADJACENT BUILDINGS, UTILITIES, OR OTHER PROPERTY. THIS REQUIREMENT IS PARTICULARLY IMPORTANT DURING FOUNDATION INSTALLATION.
4. THE GENERAL CONTRACTOR IS ADVISED TO CONSIDER PERFORMING PHOTOGRAPHIC SURVEYS AND OTHER DOCUMENTATION OF THE CONDITION OF ADJACENT BUILDINGS AND OTHER STRUCTURES BEFORE THE START OF CONSTRUCTION.
5. THE GENERAL CONTRACTOR SHALL OBTAIN COPIES OF THE LATEST CONTRACT DOCUMENTS, INCLUDING ALL ADDENDA, AND PROVIDE THE RELEVANT PORTIONS TO ALL SUB-CONTRACTORS AND SUPPLIERS PRIOR TO SUBMITTAL OF SHOP DRAWINGS AND FABRICATION AND ERECTION OF STRUCTURAL MEMBERS.
6. THE GENERAL CONTRACTOR SHALL COMPARE AND COORDINATE THE DRAWINGS OF ALL DISCIPLINES AND REPORT ANY DISCREPANCIES BETWEEN THE DRAWINGS TO THE ARCHITECT AND ENGINEER.
7. DETAILS LABELED "TYPICAL" SHALL APPLY TO ALL SITUATIONS THAT ARE THE SAME OR SIMILAR TO THOSE SPECIFICALLY DETAILED. SEE DETAIL TITLES FOR APPLICABILITY OF A PARTICULAR DETAIL. TYPICAL DETAILS SHALL APPLY WHETHER OR NOT THEY ARE SPECIFICALLY KEYED AT EACH LOCATION. THE ENGINEER SHALL HAVE FINAL AUTHORITY TO DETERMINE APPLICABILITY OF TYPICAL DETAILS.
8. WHERE CONFLICTS EXIST BETWEEN STRUCTURAL DOCUMENTS THE STRICTEST REQUIREMENTS, AS INDICATED BY THE STRUCTURAL ENGINEER SHALL GOVERN.
9. THE GENERAL CONTRACTOR SHALL REVIEW AND DETERMINE THAT DIMENSIONS ARE COORDINATED BETWEEN ARCHITECTURAL AND STRUCTURAL DRAWINGS PRIOR TO FABRICATION OR START OF CONSTRUCTION.
10. NO STRUCTURAL MEMBER SHALL BE CUT OR NOTCHED OR OTHERWISE REDUCED IN STRENGTH UNLESS APPROVED BY THE STRUCTURAL ENGINEER.
11. THE GENERAL CONTRACTOR SHALL COORDINATE ARCHITECTURAL, MECHANICAL, ELECTRICAL AND PLUMBING DRAWINGS FOR ANCHORED, EMBEDDED OR SUPPORTED ITEMS. NOTIFY THE ARCHITECT / ENGINEER OF ANY DISCREPANCIES.

CONSTRUCTION RESPONSIBILITY

1. THE CONTRACT STRUCTURAL DRAWINGS AND SPECIFICATIONS REPRESENT THE COMPLETED STRUCTURE, AND ARE NOT INTENDED TO INDICATE THE METHOD OR MEANS OF CONSTRUCTION. THE CONTRACTOR SHALL SUPERVISE AND DIRECT THE WORK AND SHALL BE SOLELY RESPONSIBLE FOR ALL CONSTRUCTION MEANS, METHODS, PROCEDURES, TECHNIQUES, SEQUENCES, AND FOR JOB SAFETY.
2. THE ENGINEER DOES NOT HAVE CONTROL OR CHARGE OF, AND SHALL NOT BE RESPONSIBLE FOR, CONSTRUCTION MEANS, METHODS, TECHNIQUES, SEQUENCES, OR PROCEDURES, FOR SAFETY PRECAUTIONS AND PROGRAMS IN CONNECTION WITH THE WORK, FOR THE ACTS OR OMISSIONS OF THE CONTRACTOR, SUBCONTRACTOR, OR ANY OTHER PERSONS PERFORMING ANY OF THE WORK, OR FOR THE FAILURE OF ANY OF THEM TO CARRY OUT THE WORK IN ACCORDANCE WITH THE CONTRACT DOCUMENTS.
3. PERIODIC SITE OBSERVATION VISITS MAY BE PROVIDED BY THE STRUCTURAL ENGINEER. THE SOLE PURPOSE OF THESE OBSERVATIONS IS TO REVIEW THE GENERAL CONFORMANCE OF THE CONSTRUCTION WITH THE STRUCTURAL CONTRACT DOCUMENTS. THESE LIMITED OBSERVATIONS SHOULD NOT BE CONSTRUED AS CONTINUOUS OR EXHAUSTIVE TO VERIFY THAT ALL CONSTRUCTION IS IN COMPLIANCE WITH THE CONSTRUCTION DOCUMENTS. THE GENERAL CONTRACTOR SHALL BE RESPONSIBLE FOR PERFORMING ALL WORK IN COMPLIANCE WITH THE CONSTRUCTION DOCUMENTS.

ABBREVIATIONS

A.F.F.	ABOVE FINISHED FLOOR		
CLR.	CLEAR	N.T.S.	NOT TO SCALE
℄	CENTERLINE	O.C.	ON CENTER
CONC.	CONCRETE	PT	PRESSURE TREATED
CONT.	CONTINUOUS	REINF.	REINFORCEMENT
C.J.	CONTROL JOINT	SIM	SIMILAR
E.W.	EACH WAY	SF	SQUARE FEET
GLB	GLULAM BEAM	S.O.G.	SLAB ON GRADE
LBW	LOAD BEARING WALL	STL.	STEEL
HD	HOLD DOWN	T&G	TONGUE AND GROOVE
MFR.	MANUFACTURER	TYP.	TYPICAL
MIN.	MINIMUM	U.N.O.	UNLESS NOTED OTHERWISE
MTL.	METAL	W/	WITH
N.T.S.	NOT TO SCALE		

DEFERRED SUBMITTALS

THE FOLLOWING IS A LIST OF ITEMS THAT ARE NOT INCLUDED IN THIS PLAN AND SHOULD BE PROVIDED BY THE BUILDER AT TIME OF APPLICATION FOR PERMIT OR AS A DEFERRED SUBMITTAL ITEM:

- ALTERNATIVE I-JOIST/BEAM MANUFACTURER PLANS
- PRE-ENGINEERED TRUSS DESIGNS AND LAYOUTS

SITE WORK

PER KRAZAN & ASSOCIATES, INC. REPORT DATED APRIL 11, 2019, FOUNDATION DESIGN IS BASED ON AN ASSUMED AVERAGE SOIL BEARING OF 2,000 PSF. EXTERIOR FOOTINGS SHALL BEAR 18" & INTERIOR FOOTINGS SHALL BEAR 12" (MINIMUM) BELOW FINISHED GRADE. ALL FOOTINGS TO BEAR ON FIRM UNDISTURBED EARTH BELOW ORGANIC SURFACE SOILS OR ON STRUCTURAL FILL PER THE GEOTECHS RECOMMENDATIONS.

CONCRETE

ITEM	DESIGN f'c (PSI)	MAX. W/C RATIO	MAX. AGGREGATE SIZE	MIN. CEMENT (SACKS/YARD)
FOUNDATIONS	2,500 @28 DAYS	0.45	¾"	
STEM WALLS	3,000 @28 DAYS	0.45	¾"	
SLAB ON GRADE	3,000 @28 DAYS	0.45	¾"	

- REINFORCING STEEL SHALL BE ASTM A615 GRADE 40 FOR #4 BARS AND SMALLER AND GRADE 60 FOR #5 BARS AND LARGER.
- MINIMUM SPLICE LENGTHS SHALL BE: 24" FOR #4, 30" FOR #5, 42" FOR #6
- CONCRETE COVER SHALL BE: 3" CAST AGAINST EARTH, 2" EXPOSED TO EARTH/WEATHER, ¾" NOT EXPOSED TO EARTH/WEATHER.
- CORNER BARS ARE REQUIRED FOR ALL HORIZONTAL BARS IN FOOTINGS AND WALLS.
- All CONCRETE HAS BEEN DESIGNED FOR 2,500 PSI CONCRETE SO NO SPECIAL INSPECTION IS REQUIRED.

FRAMING

- ALL NAILING TO COMPLY WITH REQUIREMENTS OF IBC 2303.6 AND FASTENED PER TABLE 2304.10.1.
- ALL WOOD IN CONTACT WITH CONCRETE TO BE PRESSURE TREATED. FIELD CUT ENDS, NOTCHES, AND DRILLED HOLES OF PRESSURE TREATED LUMBER SHALL BE RETREATED IN THE FIELD IN ACCORDANCE WITH AWPA M4.
- FASTENERS FOR PRESSURE PRESERVATIVE AND FIRE RETARDANT TREATED WOOD SHALL BE OF HOT-DIPPED GALVANIZED STEEL, STAINLESS STEEL, SILICON BRONZE OR COPPER.
- MAINTAIN 8" MINIMUM CLEARANCE BETWEEN WOOD AND EARTH.
- MAINTAIN 12" MINIMUM CLEARANCE BETWEEN FLOOR BEAMS AND EARTH.
- MAINTAIN 18" MINIMUM CLEARANCE BETWEEN FLOOR JOISTS AND EARTH.

LUMBER GRADES

FRAMING LUMBER SHALL COMPLY WITH THE LATEST EDITION OF THE GRADING RULES OF THE WESTERN PRODUCTS ASSOCIATION OR THE WEST COAST LUMBER INSPECTION BUREAU. ALL SAWN LUMBER SHALL BE STAMPED WITH THE GRADE MARK OF AN APPROVED LUMBER GRADING AGENCY AND SHALL HAVE THE FOLLOWING UNADJUSTED DESIGN MINIMUM PROPERTIES:

JOISTS:	WOOD TYPE:
2X4	HF #2 - Fb=850 PSI, FV=75 PSI, Fc=1300 PSI, E=1200000 PSI
2X6 OR LARGER	HF #2 - Fb=850 PSI, Fv=75 PSI, Fc=1300 PSI, E=1200000 PSI
BEAMS:	WOOD TYPE:
4X	DF-L#2 - Fb=900 PSI, FV=95 PSI, Fc=1350 PSI, E=1600000 PSI
6X OR LARGER	DF-L #2 - Fb=875 PSI, Fv=85 PSI, Fc=600 PSI, E=1300000 PSI
STUDS:	WOOD TYPE:
2X4	HF #2 - Fb=850 PSI, FV=75 PSI, Fc=1300 PSI, E=1200000 PSI
2X6 OR LARGER	HF #2 - Fb=850 PSI, Fv=75 PSI, Fc=1300 PSI, E=1200000 PSI
POSTS:	WOOD TYPE:
4X4	HF #2 - Fb=900 PSI, FV=95 PSI, Fc=1350 PSI, E=1600000 PSI
4X6 OR LARGER	HF #2 - FB=900 PSI, FV=95 PSI, FC=1350 PSI, E=1600000 PSI
6X6 OR LARGER	DF-L #1 - FB=700 PSI, FV=85 PSI, FC=475 PSI, E=1300000 PSI
6X6 OR LARGER	DF-L #2 - FB=700 PSI, FV=85 PSI, FC=475 PSI, E=1300000 PSI

SYMBOL LEGEND

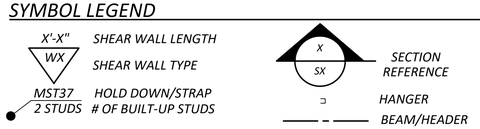

FASTENERS

ALL NAILS SPECIFIED ON THIS PLAN SHALL BE COMMON OR GALVANIZED BOX (UNLESS NOTED OTHERWISE) OF THE DIAMETER AND LENGTH LISTED BELOW OR AS PER APPENDIX L OF THE NATIONAL DESIGN SPECIFICATION FOR WOOD CONSTRUCTION (NDS). ALL FASTENERS PLACE IN PRESSURE TREATED OR FIRE TREATED LUMBER/SHEATHING SHALL BE GALVANIZED.

- 8D COMMON (0.131" DIA., 2-1/2" LENGTH
- 8D BOX (0.113" DIA., 2-1/2" LENGTH
- 10D COMMON (0.148" DIA., 3" LENGTH
- 10D BOX (0.128" DIA., 3" LENGTH
- 16D COMMON (0.162" DIA., 3-1/2" LENGTH
- 16D SINKER (0.148" DIA., 3-1/4" LENGTH
- 5D COOLER (0.086" DIA., 1-5/8" LENGTH
- 6D COOLER (0.092" DIA., 1-7/8" LENGTH

SHEATHING

TYPICAL ROOF SHEATHING SHALL BE APA RATED 7/16" SHEATHING WITH A SPAN INDEX OF 24/16. FLOOR SHEATHING SHALL BE APA RATED ¾" T&G SHEATHING WITH A SPAN INDEX OF 48/24 UNLESS NOTED OTHERWISE. STAGGER END LAPS AT ROOF AND FLOOR SHEATHING. WALL SHEATHING SHALL BE APA RATED 7/16" SHEATHING WITH A SPAN INDEX OF 24/0 UNLESS NOTED OTHERWISE.

GLULAM BEAMS (GLB)

GLULAM BEAMS SHALL BE 24F-V4 FOR SINGLE SPANS AND 24F-V8 FOR CONTINUOUS OR CANTILEVER SPANS WITH THE FOLLOWING MINIMUM PROPERTIES:
Fb=2400 PSI, Fv=240 PSI, Fc=650 PSI (PERPENDICULAR), E=1,800,000 PSI.

ENGINEERED WOOD BEAMS AND I-JOIST

CONTRACTOR SHALL SUBMIT SHOP DRAWINGS AND SPECIFICATIONS FOR APPROVAL BY BUILDING OFFICIAL. DESIGN, FABRICATION AND ERECTION IN ACCORDANCE WITH THE LATEST ICC EVALUATION REPORT.
BEAMS DESIGNATED AS "PSL" SHALL HAVE THE MINIMUM PROPERTIES:
Fb=2900 PSI, Fv=290 PSI, Fc=750 PSI (PERPENDICULAR), E=2,000,000 PSI.
BEAMS DESIGNATED AS "LVL" SHALL HAVE THE MINIMUM PROPERTIES:
Fb=2600 PSI, Fv=285 PSI, Fc=750 PSI (PERPENDICULAR), E=1,900,000 PSI.
BEAMS DESIGNATED AS "LSL" SHALL HAVE THE MINIMUM PROPERTIES:
Fb=1700 PSI, Fv=400 PSI, Fc=680 PSI (PERPENDICULAR), E=1,300,000 PSI.

PRE-ENGINEERED ROOF TRUSSES

PRE-ENGINEERED ROOF TRUSSES IS A DEFERRED SUBMITTAL ITEM AND IS TO BE DESIGNED, FABRICATED AND INSTALLED PER THE LATEST TRUSS PLATE INSTITUTE STANDARDS, AND IBC SECTION 2303.4. PREFABRICATED ITEMS TO BE DESIGNED BY A LICENSED PROFESSIONAL ENGINEER. THE FABRICATOR SHALL PROVIDE ALL CONNECTION DESIGN, DETAILS AND INSTALLATION INSTRUCTIONS, WHICH SHALL BE AVAILABLE ON SITE FOR INSPECTION. WHERE TRUSSES ARE NOT PROVIDED TO COMPLETE THE ROOF SYSTEM, OVERFRAMING MEMBERS AND CONNECTIONS SHALL BE PROVIDED. OVERFRAMING DETAILS SHALL BE INCLUDED IN THE TRUSS SHOP DRAWINGS IN ORDER TO PROVIDE LOADING CONDITIONS CONSISTENT WITH THE MODELING OF THE TRUSSES. THE OVERFRAMING AND RELATED DETAILS SHALL BE DESIGNED BY THE TRUSS ENGINEER. TRUSSES (OR DRAG TRUSSES) ALIGNING WITH SHEAR WALLS SHALL BE SPECIAL TRUSSES THAT HAS BEEN DESIGNED TO TRANSFER THE SPECIFIC WIND AND SEISMIC LOADS SHOWN ON THE PLANS.THE TRUSS SHALL BE DESIGNED TO TRANSFER THE LOAD BETWEEN THE ROOF SHEATHING AND THE SHEAR WALL BELOW. THE TRUSS SHALL BE DESIGNED TO TRANSFER A MINIMUM OF 100 PLF ALONG THE LENGTH OF THE TRUSS. TEMPORARY AND PERMANENT BRACING REQUIRED FOR THE STABILITY OF THE TRUSS ELEMENTS UNDER GRAVITY LOADS AND IN-PLANE WIND OR SEISMIC LOADS SHALL BE DESIGNED BY THE TRUSS ENGINEER WHERE THE TOP CHORD IS NOT DIRECTLY ATTACHED TO THE ROOF SHEATHING. THE TRUSS ENGINEER SHALL DESIGN AND SHOW THE PLACEMENT OF ALL REQUIRED TOP CHORD BRACING AND CONNECTIONS ON THE TRUSS SHOP DRAWINGS. ANY BRACING LOADS TRANSFERRED TO THE MAIN BUILDING SYSTEM SHALL BE IDENTIFIED AND SUBMITTED TO THE ENGINEER OF RECORD FOR REVIEW. DESIGN CALCULATIONS AND SHOP DRAWINGS SHALL BE SUBMITTED FOR REVIEW BY THE ENGINEER OF RECORD PRIOR TO SUBMITTING TO THE BUILDING OFFICIAL FOR APPROVAL. ROOF TRUSS TOP CORD MUST BE HF#2 OR BETTER.

SPECIAL INSPECTIONS

SOILS (PER IBC 1705.6):
CONTINUOUS SPECIAL INSPECTION SHALL BE REQUIRED FOR MATERIAL, DENSITIES AND LIFT THICKNESS DURING PLACEMENT AND COMPACTION OF COMPACTED STRUCTURAL FILL AND
PERIODIC SPECIAL INSPECTION IS REQUIRED TO VERIFY SHALLOW FOUNDATIONS BEARING MATERIAL MEETS DESIGNED BEARING CAPACITY, VERIFYING EXCAVATION ARE EXTENDED TO PROPER DEPTH AND HAVE REACHED PROPER MATERIAL, PERFORM CLASSIFICATION AND TESTING OF COMPACTED FILL MATERIAL AND TO INSPECT SUBGRADE MATERIAL PRIOR TO COMPACTED FILL PLACEMENT TO VERIFY THE SITE HAS BEEN PREPARED PROPERLY.

WOOD CONSTRUCTION (PER IBC 1705.5) AND WIND RESISTANCE (PER IBC 1705.11):
PERIODIC SPECIAL INSPECTION IS REQUIRED TO VERIFY NAILING, BOLTING, ANCHORING AND OTHER FASTENING OF ELEMENTS OF SHEAR WALLS WITH NAIL SPACING 4" AND LESS, DRAG STRUTS, BRACES AND HOLD DOWNS.

POST-INSTALLED ANCHORS

1. POST-INSTALLED ANCHORS SHALL ONLY BE USED WHERE SPECIFIED ON THE DRAWINGS. CONTRACTOR SHALL OBTAIN APPROVAL FROM ENGINEER OF RECORD (EOR) PRIOR TO USING POST-INSTALLED ANCHORS FOR MISSINGS OR MISPLACED ANCHORS.
2. CARE SHALL BE GIVEN TO AVOID CONFLICTS WITH EXISTING REINFORCING WHEN DRILLING HOLES. HOLES SHALL BE DRILLED AND CLEANED PER THE MANUFACTURER'S INSTRUCTIONS. ANCHORS SHALL BE INSTALLED PER THE MANUFACTURER'S INSTALLATION INSTRUCTIONS AT NOT LESS THAN MINIMUM EDGE DISTANCES AND/OR SPACING INDICATED IN THE MANUFACTURER'S LITERATURE.
3. SPECIAL INSPECTION SHALL BE PROVIDED FOR ALL ADHESIVE AND MECHANICAL ANCHOR INSTALLATIONS AS REQUIRED BY THE EOR. INDEPENDENT ON-SITE PROOF LOAD TESTING SHALL BE PERFORMED AS REQUIRED BY THE EOR. CONTACT EOR FOR NUMBER OF ANCHORS REQUIRED TO BE TESTED AND REQUIRED PROOF LOAD MAGNITUDE.
4. UNLESS NOTED OTHERWISE ON DOCUMENTS, ACCEPTABLE PRODUCTS SHALL BE AS LISTED BELOW:
   - A. MECHANICAL ANCHORS INTO CONCRETE:
     1. USE THE FOLLOWING (UNO):
        - A. SIMPSON TITEN HD (ICC-ES AC193 AND ACI 355.2) FOR CRACKED & UNCRACKED CONCRETE PER (ICC-ES ESR-2713)
        - B. HILTI KWIK BOLT TZ CARBON AND STAINLESS STEEL ANCHORS (ICC-ES ESR1917)
        - C. RED HEAD TRUBOLT + WEDGE ANCHORS (ICC-ES ESR2427)
        - D. SIMPSON STRONG-TIE STRONG-BOLT (STB) (ICC-ES ESR1771)(FL8668)
     2. USE THE FOLLOWING ONLY WHERE SPECIFICALLY CALLED OUT ON THE DOCUMENTS:
        - A. HILTI HDA (ICC-ES ESR1546)
        - B. HILTI HSL-3 ANCHOR (ICC-ES ESR1545)
        - C. SIMPSON STRONG-TIE TITEN HD (THD) (ICC-ES ESR2713)(FL2304)
   - B. MECHANICAL ANCHORS INTO MASONRY LINTELS OR GROUT FILLED CELLS:
     1. USE THE FOLLOWING (UNO):
        - A. SIMPSON TITEN HD (ICC-AC AC106) FOR MASONRY PER (ICC-ES ESR-1056)
        - B. HILTI KWIK BOLT 3 MASONRY ANCHORS (ICC-ES ESR1385)
        - C. SIMPSON STRONG-TIE WEDGE-ALL ANCHOR(WA) (ICBO-ES ER-3631) (FL5415)
     2. USE THE FOLLOWING ONLY WHERE SPECIFICALLY CALLED OUT ON THE DOCUMENTS:
        - A. HILTI HUS-H SCREW ANCHOR (ICC-ES ESR2369)
        - B. SIMPSON STRONG-TIE TITEN HD (THD) (ICC-ES ESR1056)(FL2304)
   - C. ADHESIVE ANCHORS INTO CONCRETE:
     1. USE THE FOLLOWING (UNO):
        - A. HILTI HIT-RE 500-SD ADHESIVE (ICC-ES ESR2322)
        - B. RED HEAD EPCON G5 ADHESIVE (ICC-ES ESR1137)(FL6582)
        - C. SIMPSON STRONG-TIE SET-XP EPOXY-TIE ADHESIVE (SETXP) (ICC-ES ESR2508)
     2. USE THE FOLLOWING ONLY WHERE SPECIFICALLY CALLED OUT ON THE DOCUMENTS:
        - A. HILTI HIT HY 150 MAX ADHESIVE (ICC-ES ESR2262)
   - D. ADHESIVE ANCHORS INTO MASONRY LINTELS OR GROUT FILLED CELLS:
     1. USE THE FOLLOWING (UNO):
        - A. HILTI HIT HY-150 MAX ADHESIVE (ICC-ES ESR1967)
        - B. SIMPSON STRONG-TIE SET EPOXY-TIE ADHESIVE (SET) (ICC-ES ESR1772)(FL5550)

PIERUCCIONI E&C, LLC
CHON PIERUCCIONI, PE
3128 N. BENNETT ST. TACOMA, WA 98407
PIERUCCIONIENGINEERING@GMAIL.COM
206.949.7866

REUSE OF DOCUMENTS
THIS DOCUMENT AND THE IDEAS AND DESIGNS INCORPORATED HEREIN, AS AN INSTRUMENT OF PROFESSIONAL SERVICE, ARE THE PROPERTY OF PIERUCCIONI E&C AND ARE NOT TO BE USED OR REPRODUCED IN WHOLE OR IN PART WITHOUT THE WRITTEN AUTHORIZATION OF PIERUCCIONI E&C, LLC

PRCNC20250692

City of Puyallup
Development & Permitting Services
ISSUED PERMIT
Building | Planning
Engineering | Public Works
Fire | Traffic

EAST TOWN CROSSING
CLUBHOUSE WITH MANAGER'S APARTMENT
PIONEER & SHAW PUYALLUP WA

REVISIONS

01	----

REVISIONS

DRAWN BY: CP
CHECKED BY: CP
DATE: 2025.02.28
TITLE: STRUCTURAL NOTES
PROJECT # : ----
SHEET: S1.0

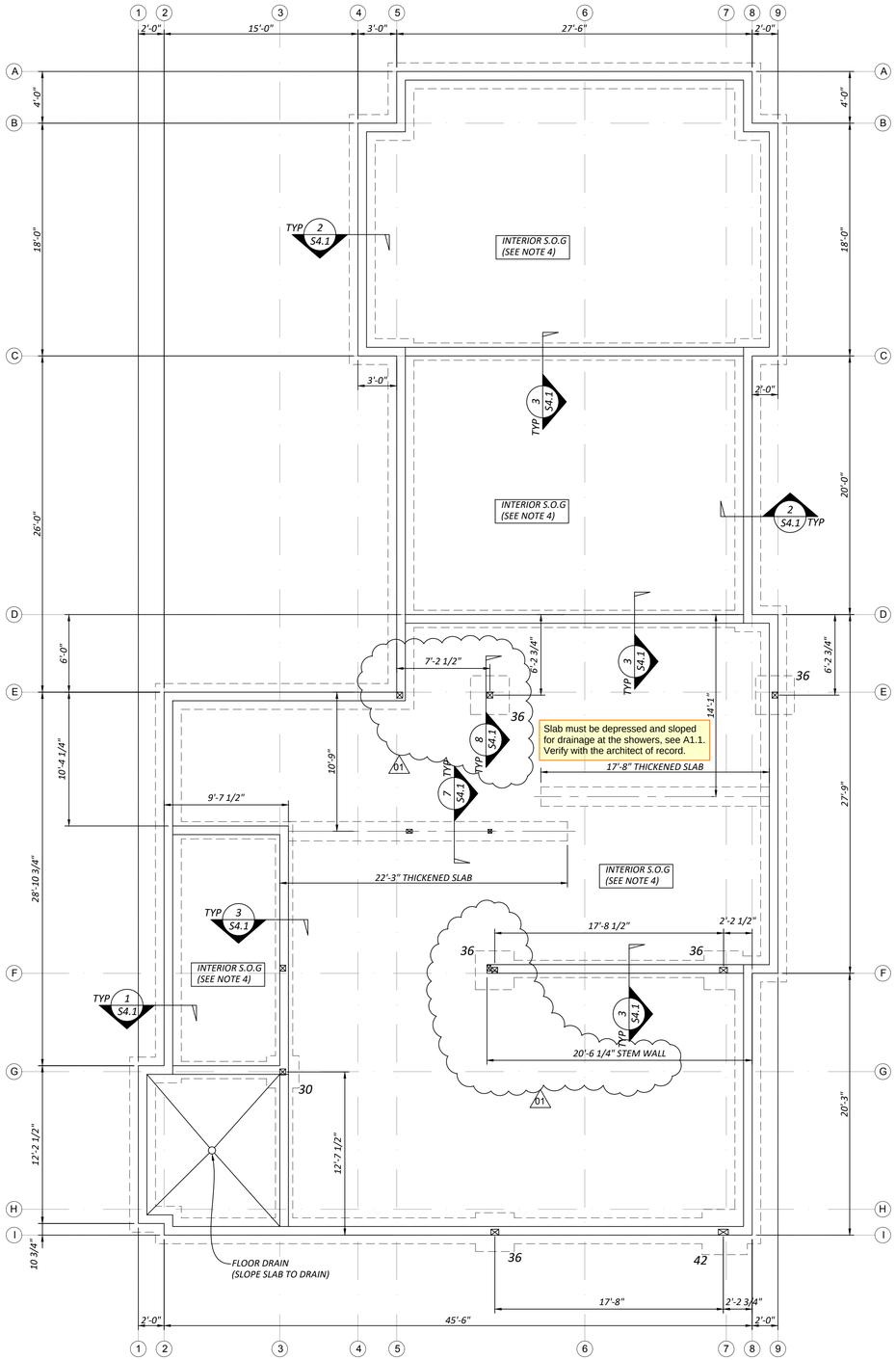

FOUNDATION PLAN

3/16" = 1'-0"

See sheet S3.4 for required shear wall anchor minimum sizes and spacing, and hold-down anchor locations and specifications.

NOTES:

1. PER KRAZAN & ASSOCIATES, INC. REPORT DATED APRIL 11, 2019, FOUNDATION DESIGN IS BASED ON AN ASSUMED AVERAGE SOIL BEARING OF 2,000 PSF. EXTERIOR FOOTINGS SHALL BEAR 18" & INTERIOR FOOTINGS SHALL BEAR 12" (MINIMUM) BELOW FINISHED GRADE. ALL FOOTINGS TO BEAR ON FIRM UNDISTURBED EARTH BELOW ORGANIC SURFACE SOILS OR ON STRUCTURAL FILL PER THE GEOTECHS RECOMMENDATIONS. IT IS THE CONTRACTORS RESPONSIBILITY TO VERIFY THAT THE SITE SOILS PROVIDE THIS MINIMUM BEARING CAPACITY.
2. EXTERIOR FOOTINGS TO BE A MINIMUM OF 18" BELOW FINISHED GRADE BEARING ON NATIVE UNDISTURBED SOIL OR STRUCTURAL FILL.
3. INTERNAL FOOTINGS TO BE A MINIMUM OF 12" BELOW FINISHED GRADE BEARING ON NATIVE UNDISTURBED SOIL OR STRUCTURAL FILL.
4. INTERIOR S.O.G. SHALL BE 4" THICK SLAB ON GRADE OVER INSULATION (PER ARCH.), OVER VAPOR BARRIER (PER ARCH.) OVER 4" COMPACTED SAND OR GRAVEL. SLAB SHALL BE REINFORCED WITH 6X6 W2.9XW2.9 WELDED WIRE, #3 BARS @ 24" O.C., OR HELIX FABRIC (5# PER CUBIC YARD).
5. EXTERIOR SLAB SHALL BE 4" THICK SLAB ON GRADE SLOPED AT 1% AWAY FROM BUILDING..
6. CONTROL JOISTS SHALL BE 15' O.C. MAX.
7. SEE SHEAR WALL PLAN ON SHEET S3.4 FOR HOLD DOWN AND ANCHOR BOLT LOCATIONS NOT SHOWN HERE.

FOOTING SCHEDULE

30	POST ON 30" SQUARE X 8" THICK CONC. FOOTING
36	POST ON 36" SQUARE X 8" THICK CONC. FOOTING W/ 4-#4 BARS E.W.
42	POST ON 42" SQUARE X 8" THICK CONC. FOOTING W/ 4-#4 BARS E.W.

NOTES:

1. USE MIN. 6" WIDE POST BELOW BEAM SPLICES
2. USE 4X4 POST BELOW 4X BEAMS, U.N.O.
3 USE 6X6 POST BELOW 6X BEAMS, U.N.O.
4. PT POST SHALL BE USED IN EXTERIOR CONDITIONS

PIERUCCIONI E&C, LLC
CHON PIERUCCIONI, PE
3128 N. BENNETT ST. TACOMA, WA 98407
PIERUCCIONIENGINEERING@GMAIL.COM
206.949.7866

REUSE OF DOCUMENTS
THIS DOCUMENT AND THE IDEAS AND DESIGNS INCORPORATED HEREIN, AS AN INSTRUMENT OF PROFESSIONAL SERVICE, ARE THE PROPERTY OF PIERUCCIONI E&C AND ARE NOT TO BE USED OR REPRODUCED IN WHOLE OR IN PART WITHOUT THE WRITTEN AUTHORIZATION OF PIERUCCIONI E&C, LLC.

PRCNC20250692

City of Puyallup
Development & Permitting Services
ISSUED PERMIT

Building	Planning
Engineering	Public Works
Fire	Traffic

EAST TOWN CROSSING

CLUBHOUSE WITH MANAGER'S APARTMENT
PIONEER & SHAW PUYALLUP WA

REVISIONS

01	CITY REVIEW COMMENTS

REVISIONS

DRAWN BY: CP
CHECKED BY: CP
DATE: 2025.02.28
TITLE: FOUNDATION PLAN
PROJECT # : ----
SHEET: S3.1

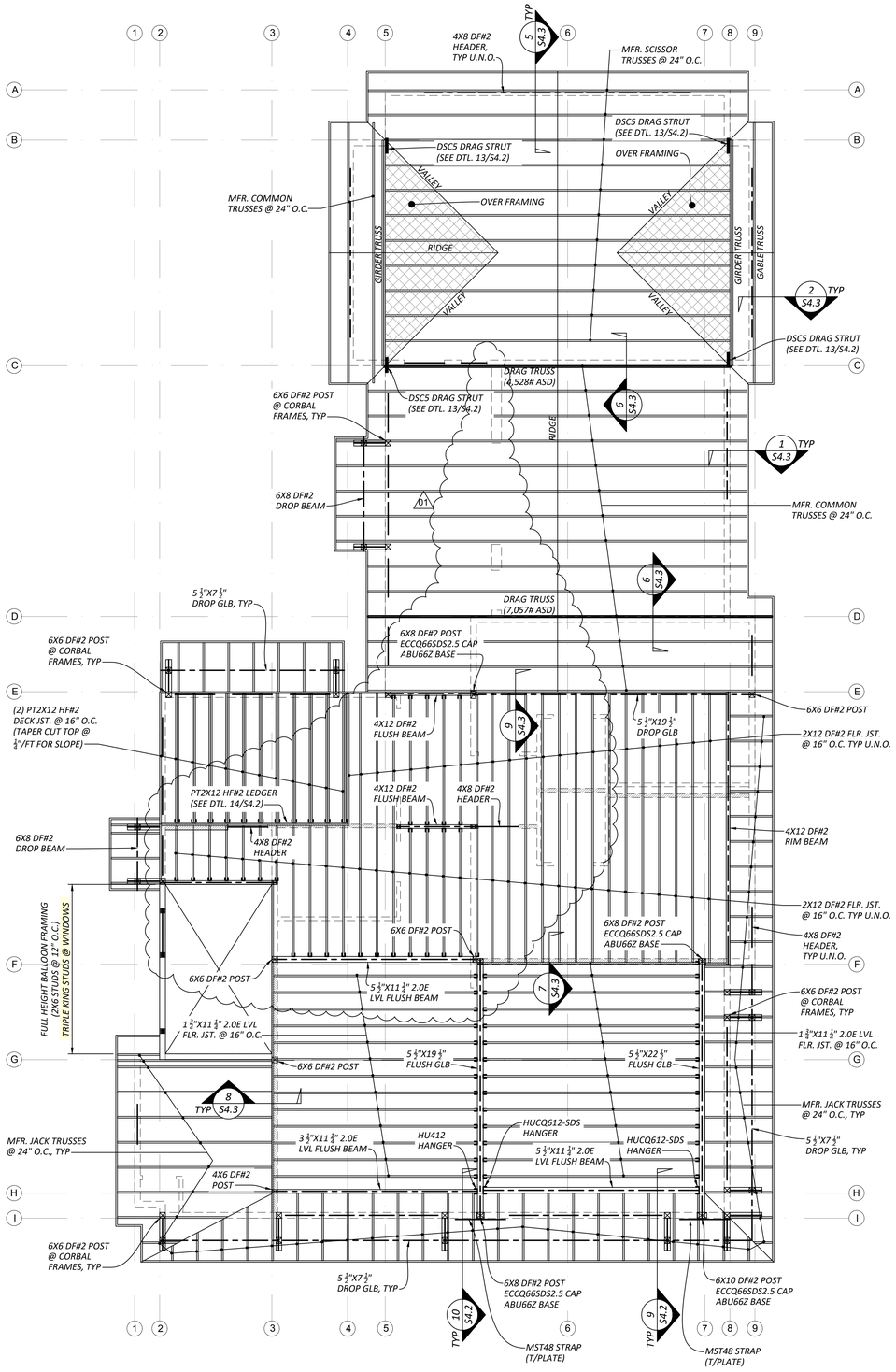

LEVEL 2 FLOOR FRAMING PLAN

3/16" = 1'-0"

FLOOR FRAMING NOTES:

1. *ALL COLUMNS NOT SPECIFIED OR OTHERWISE NOTED ON THE PLANS ARE LAMINATED TOGETHER PER "TYPICAL BUILT-UP COLUMN DETAIL" ON SHEET S4.2. SOLID WOOD COLUMNS MAY BE SUBSTITUTED FOR BUILT-UP COLUMNS BY PROVIDING AN EQUIVALENT CROSS SECTIONAL AREA.*
2. *ALL BEAMS SHALL HAVE A MINIMUM OF 3X BUILT-UP COLUMN WITH CONTINUOUS LOAD PATH TO FOUNDATION.*
4. *ALL HEADERS UNLESS SPECIFIED ON THE PLANS ARE TO BE 4X8 DF-L #2 WITH AT LEAST ONE CRIPPLE AND ONE STUD FOR EACH END FOR OPENINGS LESS THAN OR EQUAL TO 5'-0" WIDE AND TWO CRIPPLES AND ON KING STUD FOR ALL OTHERS.*
5. *ALL FLOOR JOIST HUNG FROM FLUSH BEAMS SHALL BE HUNG WITH LUS210 (FOR 2X12) OR MIU1.81/11 (FOR 1 ¾"X11 ¼" LVL).*
6. *ALL RIM JOIST SHALL BE 2X12 DF#2 U.N.O. SEE SHEAR WALL TABLE TO AREAS REQUIRING THICKER RIM JOIST.*
7. *FLOOR SHEATHING SHALL BE ¾" T&G (48/24) GLUED AND NAILED WITH 10d @ 4" O.C. ALONG PANEL EDGES AND 12" O.C. FIELD. STAGGER END LAPS. NAILS SHALL EMBED 1 ½" MINIMUM INTO FLOOR JOIST. THIS LEVEL REQUIRES BLOCKING AT ALL SHEATHING PANEL EDGES.*
8. *STAIR STRINGERS SHALL BE 2X12 DF#2 @ 16" O.C.*
9. *EXTERIOR WALLS TO BE 2X6 AT 16" O.C., U.N.O.*
10. *INTERIOR PARTITIONS TO BE 2X4 AT 16" O.C. (2X6 @ PLUMBING WALLS OR PER ARCH.) U.N.O.*
11. *FLOOR JOISTS AND BEAMS OF EQUAL OR BETTER CAPACITY MAY BE SUBSTITUTED FOR THOSE SHOWN ON THIS PLAN, "EQUAL" IS DEFINED AS HAVING MOMENT CAPACITY, SHEAR CAPACITY, AND STIFFNESS WITHIN 3% OF THE SPECIFIED JOISTS OR BEAMS.*

ROOF FRAMING NOTES:

1. *ALL COLUMNS NOT SPECIFIED OR OTHERWISE NOTED ON THE PLANS ARE LAMINATED TOGETHER PER "TYPICAL BUILT-COLUMN DETAIL" ON SHEET S4.2. SOLID WOOD COLUMNS MAY BE SUBSTITUTED FOR BUILT-UP COLUMNS BY PROVIDING AN EQUIVALENT CROSS SECTIONAL AREA.*
2. *ALL HEADERS UNLESS SPECIFIED ON THE PLANS ARE TO BE 4X10 DF-L #2 WITH AT LEAST ONE CRIPPLE AND ONE STUD FOR EACH END FOR OPENINGS LESS THAN OR EQUAL TO 5'-0" WIDE AND TWO CRIPPLES AND ON KING STUD FOR ALL OTHERS.*
3. *ROOF SHEATHING SHALL BE ½" CDX OR 7/16" OSB NAILED WITH 8d @6" O.C. ALONG PANEL EDGES, AND 12" O.C. FIELD. SPAN INDEX SHALL BE 24/0. STAGGER END LAPS. NAILS SHALL MINIMUM 1 ½" EMBED INTO ROOF STRUCTURE BELOW.*
4. *BEARING WALLS ARE INDICATED AS SHADED WALLS*
5. *PROVIDE VENTED BLOCKING AT REQUIRED TRUSS/RAFTER BAYS*
5. *SHADED AREAS INDICATE OVERFRAMING. ROOF OVER FRAMING (IRC SECTION R802.3): RAFTERS SHALL BE FRAMED TO 2X RIDGE BOARD PER PLAN. RIDGE BOARD SHALL NOT BE LESS IN DEPTH THAN THE CUT END OF THE RAFTER. AT ALL VALLEYS AND HIPS THERE SHALL BE A 2X VALLEY OR HIP RAFTER AND NOT LESS IN DEPTH THAN THE CUT END OR THE RAFTER. (FULL COVERAGE AT RIDGE, HIPS AND VALLEYS).*
6. *ALL MANUFACTURED TRUSSES:*

* *SHALL NOT BE FIELD ALTERED WITHOUT ENGINEER'S APPROVAL*
* *SHALL HAVE DESIGN DETAILS AND DRAWINGS ON SITE FOR FRAMING INSPECTION*
* *SHALL BE INSTALLED AND BRACED TO MANUFACTURER'S SPECIFICATION*
* *SHALL CARRY MANUFACTURER'S STAMP ON EACH TRUSS*

7. *IF AN ENGINEERED ROOF FRAMING LAYOUT IS PROVIDED BY THE TRUSS SUPPLIER, THAT TRUSS LAYOUT SHALL SUPERCEDE THE TRUSS LAYOUT INDICATED IN THE PLANS.PROVIDE TRUSS LAYOUT AND SPECS ON SITE FOR INSPECTION.*
8. *PROVIDE SOLID FRAMING EQUAL TO THE WIDTH OF THE MEMBER BEING SUPPORTED (U.N.O.)*

PIERUCCIONI E&C, LLC
CHON PIERUCCIONI, PE
3128 N. BENNETT ST. TACOMA, WA 98407
PIERUCCIONIENGINEERING@GMAIL.COM
206.949.7866

REUSE OF DOCUMENTS
THIS DOCUMENT AND THE IDEAS AND DESIGNS INCORPORATED HEREIN, AS AN INSTRUMENT OF PROFESSIONAL SERVICE, ARE THE PROPERTY OF PIERUCCIONI E&C AND ARE NOT TO BE USED OR REPRODUCED IN WHOLE OR IN PART WITHOUT THE WRITTEN AUTHORIZATION OF PIERUCCIONI E&C, LLC.

PRCNC20250692

City of Puyallup
Development & Permitting Services
ISSUED PERMIT
Building | Planning
Engineering | Public Works
Fire | Traffic

EAST TOWN CROSSING
CLUBHOUSE WITH MANAGER'S APARTMENT
PIONEER & SHAW PUYALLUP WA

REVISIONS	
01	CITY REVIEW COMMENTS

REVISIONS

DRAWN BY: CP
CHECKED BY: CP
DATE: 2025.02.28
TITLE: FRAMING PLAN
PROJECT # : ----
SHEET: S3.2

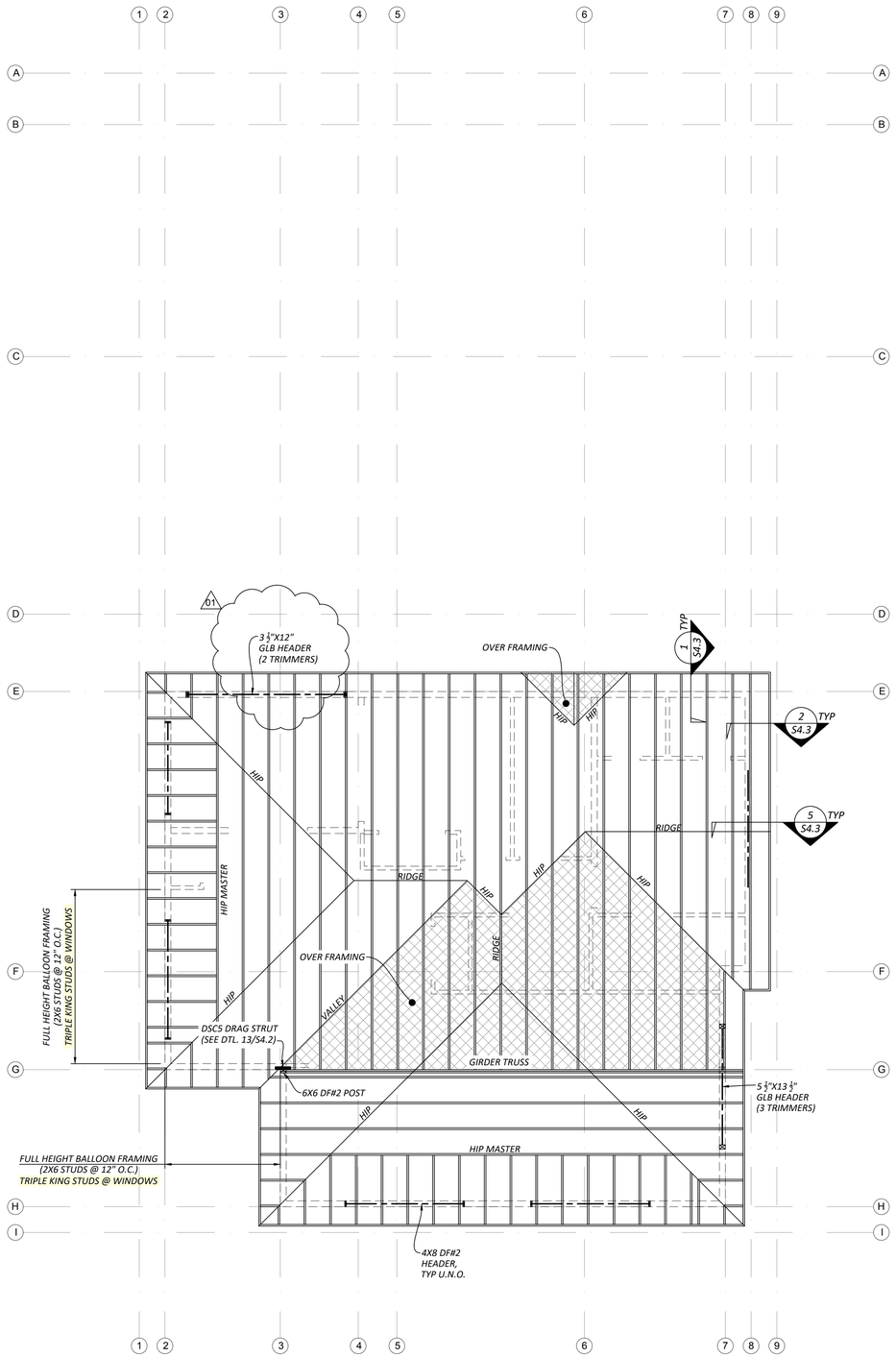

ROOF FRAMING PLAN
3/16" = 1'-0"

NOTES:

1. *ALL COLUMNS NOT SPECIFIED OR OTHERWISE NOTED ON THE PLANS ARE LAMINATED TOGETHER PER "TYPICAL BUILT-COLUMN DETAIL" ON SHEET S4.2. SOLID WOOD COLUMNS MAY BE SUBSTITUTED FOR BUILT-UP COLUMNS BY PROVIDING AN EQUIVALENT CROSS SECTIONAL AREA.*
2. *ALL HEADERS UNLESS SPECIFIED ON THE PLANS ARE TO BE 4X10 DF-L #2 WITH AT LEAST ONE CRIPPLE AND ONE STUD FOR EACH END FOR OPENINGS LESS THAN OR EQUAL TO 5'-0" WIDE AND TWO CRIPPLES AND ON KING STUD FOR ALL OTHERS.*
3. *ROOF SHEATHING SHALL BE $\frac{1}{2}$" CDX OR $\frac{7}{16}$" OSB NAILED WITH 8d @6" O.C. ALONG PANEL EDGES, AND 12" O.C. FIELD. SPAN INDEX SHALL BE 24/0. STAGGER END LAPS. NAILS SHALL MINIMUM 1 $\frac{1}{2}$" EMBED INTO ROOF STRUCTURE BELOW.*
4. *BEARING WALLS ARE INDICATED AS SHADED WALLS*
5. *PROVIDE VENTED BLOCKING AT REQUIRED TRUSS/RAFTER BAYS*
5. *SHADED AREAS INDICATE OVERFRAMING. ROOF OVER FRAMING (IRC SECTION R802.3): RAFTERS SHALL BE FRAMED TO 2X RIDGE BOARD PER PLAN. RIDGE BOARD SHALL NOT BE LESS IN DEPTH THAN THE CUT END OF THE RAFTER. AT ALL VALLEYS AND HIPS THERE SHALL BE A 2X VALLEY OR HIP RAFTER AND NOT LESS IN DEPTH THAN THE CUT END OR THE RAFTER. (FULL COVERAGE AT RIDGE, HIPS AND VALLEYS).*
6. *ALL MANUFACTURED TRUSSES:*

* *SHALL NOT BE FIELD ALTERED WITHOUT ENGINEER'S APPROVAL*
* *SHALL HAVE DESIGN DETAILS AND DRAWINGS ON SITE FOR FRAMING INSPECTION*
* *SHALL BE INSTALLED AND BRACED TO MANUFACTURER'S SPECIFICATION*
* *SHALL CARRY MANUFACTURER'S STAMP ON EACH TRUSS*

7. *IF AN ENGINEERED ROOF FRAMING LAYOUT IS PROVIDED BY THE TRUSS SUPPLIER, THAT TRUSS LAYOUT SHALL SUPERCEDE THE TRUSS LAYOUT INDICATED IN THE PLANS.PROVIDE TRUSS LAYOUT AND SPECS ON SITE FOR INSPECTION.*
8. *PROVIDE SOLID FRAMING EQUAL TO THE WIDTH OF THE MEMBER BEING SUPPORTED (U.N.O.)*

PIERUCCIONI E&C, LLC
CHON PIERUCCIONI, PE
3128 N. BENNETT ST. TACOMA, WA 98407
PIERUCCIONIENGINEERING@GMAIL.COM
206.949.7866

REUSE OF DOCUMENTS
THIS DOCUMENT AND THE IDEAS AND DESIGNS INCORPORATED HEREIN, AS AN INSTRUMENT OF PROFESSIONAL SERVICE, ARE THE PROPERTY OF PIERUCCIONI E&C AND ARE NOT TO BE USED OR REPRODUCED IN WHOLE OR IN PART WITHOUT THE WRITTEN AUTHORIZATION OF PIERUCCIONI E&C, LLC.

PRCNC20250692

City of Puyallup
Development & Permitting Services
ISSUED PERMIT
Building | Planning
Engineering | Public Works
Fire | Traffic

EAST TOWN CROSSING
CLUBHOUSE WITH MANAGER'S APARTMENT
PIONEER & SHAW PUYALLUP WA

REVISIONS

01	CITY REVIEW COMMENTS

REVISIONS

DRAWN BY: CP
CHECKED BY: CP
DATE: 2025.02.28
TITLE: FRAMING PLAN
PROJECT # : ----
SHEET: S3.3

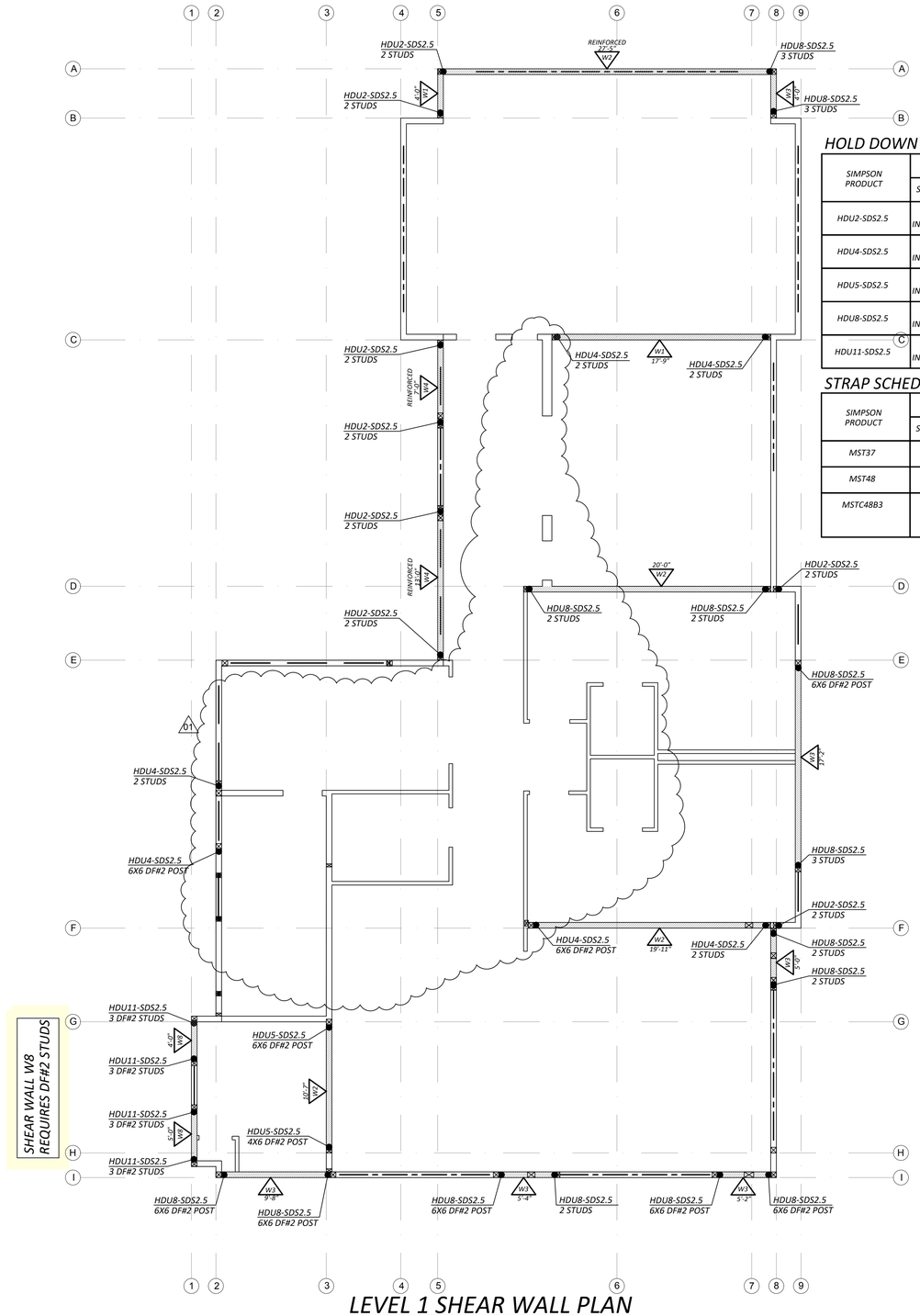

LEVEL 1 SHEAR WALL PLAN

3/16" = 1'-0"

NOTES:

1. UNLESS SPECIFIED ON PLANS, ALL EXTERIOR WALL SHALL BE SHEAR WALL W1, SEE SHEAR WALL TABLE ON THIS SHEET.
2. SEE DETAIL 10 ON SHEET S4.3 FOR REINFORCED SHEAR WALL REQUIREMENT.

HOLD DOWN SCHEDULE

SIMPSON PRODUCT	FASTENERS		ANCHOR BOLTS
	SCREWS OR BOLTS	NAILS	
HDU2-SDS2.5	(6) $\frac{1}{4}$" X 2 $\frac{1}{2}$" SDS INTO POST PER PLAN	--	SSTB16 (12 $\frac{3}{8}$" EMBED)
HDU4-SDS2.5	(10) $\frac{1}{4}$" X 2 $\frac{1}{2}$" SDS INTO POST PER PLAN	--	SB $\frac{5}{8}$X24 (18" EMBED)
HDU5-SDS2.5	(14) $\frac{1}{4}$" X 2 $\frac{1}{2}$" SDS INTO POST PER PLAN	--	SB $\frac{5}{8}$X24 (18" EMBED)
HDU8-SDS2.5	(20) $\frac{1}{4}$" X 2 $\frac{1}{2}$" SDS INTO POST PER PLAN	--	SB $\frac{5}{8}$X24 (18" EMBED)
HDU11-SDS2.5	(30) $\frac{1}{4}$" X 2 $\frac{1}{2}$" SDS INTO POST PER PLAN	--	SB 1X30 (24" EMBED)

STRAP SCHEDULE

SIMPSON PRODUCT	FASTENERS		END LENGTH
	SCREWS OR BOLTS	NAILS	
MST37	--	(22) 0.162" X 2 $\frac{1}{2}$" INTO 2 STUDS	--
MST48	--	(34) 0.162" X 2 $\frac{1}{2}$" INTO 2 STUDS	--
MSTC48B3	--	(12) 0.148"X3" INTO BEAM FACE (4) 0.148"X3" INTO BEAM BOTTOM (38) 0.148"X3" INTO 2 STUDS	--

SHEAR WALL AND ANCHOR TABLE

WALL TYPE	APA RATED SHEATHING (b), (c)	MINIMUM NOMINAL THICKNESS (IN)	MINIMUM NAIL PENTRATION IN FRAMING (IN) (i)	STUD & BLOCKING SIZE @ ADJOINING EDGES (k)	REQUIRED RIM JOIST THICKNESS	EDGE NAIL SIZE AND SPACING, COMMON OR GALV. BOX (d)	RIM JOIST OR BLOCK CONNECTION TO TOP PLATE (e), (f)	2x BOTTOM PLATE ATTACHMENT TO WOOD BELOW (g), (i)	ANCHOR BOLT-SILL PLATE ATTACHMENT TO CONCRETE BELOW (h)	CAPACITY (PLF) SEISMIC/WIND
W1	OSB	7/16 (j)	1 3/8	2x	2x OR 1 $\frac{1}{4}$"LSL	0.131" X 2 $\frac{1}{2}$" @ 6" O.C. EDGE	LTP4 @ 20" O.C. OR A35 @ 16" O.C.	(1) 16d @ 8" O.C.	$\frac{5}{8}$" @ 48" O.C.	242/339
W2	OSB	7/16 (j)	1 3/8	2x	2x OR 1 $\frac{1}{4}$"LSL	0.131" X 2 $\frac{1}{2}$" @ 4" O.C. EDGE	LTP4 @14" O.C. OR A35 @ 11" O.C	(1) 16d @ 6" O.C.	$\frac{5}{8}$" @ 36" O.C.	353/495
W3	OSB	7/16 (j)	1 3/8	2x	2x OR 1 $\frac{1}{4}$"LSL	0.131" X 2 $\frac{1}{2}$" @ 3" O.C. EDGE	LTP4 @11" O.C. OR A35 @ 8" O.C	(1) 16d @ 4" O.C.	$\frac{5}{8}$" @ 24" O.C.	456/637
W4 (g)	OSB	7/16 (j)	1 3/8	3x	3x OR 1 $\frac{3}{4}$" LSL	0.131" X 2 $\frac{1}{2}$" @ 2" O.C. EDGE	LTP4 @ 8" O.C. OR A35 @ 6" O.C	(2) 16d @ 6" O.C.	$\frac{5}{8}$" @ 24" O.C.	595/832
W8 (a, l)	CDX	15/32	1 1/2	3x	3x OR 1 $\frac{3}{4}$" LSL	0.148" X 2 $\frac{1}{2}$" @ 2" O.C. EDGE	LTP4 @6" O.C. OR HSLQ37 @ 14" O.C	$\frac{1}{4}$" X 5" SDWS @ 5" O.C.	$\frac{5}{8}$" @ 12" O.C.	770/1078

(a) FRAMING AT ADJACENT PANELS SHALL BE 3" NOMINAL OR GREATER AND NAILS SHALL BE STAGGERED.
(b) WHERE SHEATHING IS APPLIED ON BOTH SIDES OF WALL, PANEL EDGE JOINTS ON 2x FRAMING SHALL BE STAGGERED SO THAT JOINTS ON THE OPPOSITE SIDE ARE NOT LOCATED ON THE SAME STUDS.
(c) BLOCKING IS REQUIRED AT ALL PANEL EDGES
(d) PROVIDE SHEAR WALL SHEATHING AND NAILING FOR THE ENTIRE LENGTH OF THE WALLS INDICATED ON THE PLANS. ENDS OF FULL HEIGHT WALLS ARE DESIGNATED BY EXTERIOR OF THE BUILDING, CORRIDORS, WINDOW, OR DOORWAYS OR AS DESIGNATED ON THE PLANS. SEE PLANS FOR HOLD DOWN POSTS. SHEATHING EDGE NAILING IS REQUIRED AT ALL HOLD DOWN POSTS. EDGE NAILING MAY ALSO BE REQUIRED TO EACH STUD USED IN BUILT-UP HOLD DOWN POSTS.
(e) BASED ON 0.131X 1 $\frac{1}{2}$" LONG NAILS USED TO ATTACH FRAMING CLIPS DIRECTLY TO FRAMING. USE 0.131x 2 $\frac{1}{2}$" NAILS WHERE INSTALLED OVER SHEATHING. USE A35 OR RBC CLIPS IN LIEU OF LTP'S FOR ROOF BLOCKING TO TOP PLATE.
(f) LTP4'S ARE NOT REQUIRED WHERE THE LOWER WALL SHEATHING IS OVERLAPPED ONTO THE RIM JOIST A MINIMUM OF 1 $\frac{1}{2}$" AND NAILED TO THE RIM JOIST PER THE SHEAR WALL PERIMETER NAIL SPACING. LTP4'S MAY BE SUBSTITUTED W/ A35'S.
(g) CONTINUOUS SHEATHING IS REQUIRE OVER THE BOTTOM PLATE TO THE BOTTOM OF THE RIM JOIST OR SILL PLATE WITH EDGE NAILING AT EACH. WHERE TWO ROWS OF NAILING ARE REQUIRED AT RAISED FLOORS, PROVIDE BLOCKING PER PLAN, AND ATTACH WITH LTP4 PER SCHEDULE.
(h) ANCHOR BOLTS SHALL BE PROVIDED WITH STEEL PLATE WASHERS 0.229"x3"x3". EMBED ANCHOR BOLTS MINIMUM 7" INTO THE CONCRETE. PLATE WASHERS SHALL EXTEND TO WITHIN $\frac{1}{2}$" OF THE SILL PLATE EDGE ON THE SHEATHED WALL FACE. POST INSTALLED ANCHOR BOLTS MAY BE INSTALLED AT INTERIOR SHEAR WALLS AND MISSING ANCHOR BOLT LOCATIONS. POST INSTALLED ANCHOR BOLTS MAY BE WEDGE OR TITAN HD WITH THE SAME DIAMETER AND EMBED AS THE SPECIFIED ANCHOR BOLT.
(i) PRESSURE TREATED MATERIALS CAN CAUSE EXCESSIVE CORROSION IN THE FASTENERS. PROVIDE HOT-DIPPED GALVANIZED (ELECTROPLATING IS NOT ACCEPTABLE) NAILS AND CONNECTOR PLATES (FRAMING ANGLES, ETC.) FOR ALL CONNECTORS IN CONTACT WITH PRESSURE TREATED FRAMING MEMBERS.
(j) ALL SHEAR WALL STUDS MUST BE SPACED NO MORE THAN 16" O.C.
(k) 3X MEMBERS MAY BE SUBSTITUTED WITH 2 STUDS NAILED TOGETHER PER TYPICAL BUILT-UP COLUMN DETAIL (SEE DETAILS).
(l) WALL FRAMING FOR THESE SHEAR WALLS REQUIRE DF#2 STUDS AND POSTS.

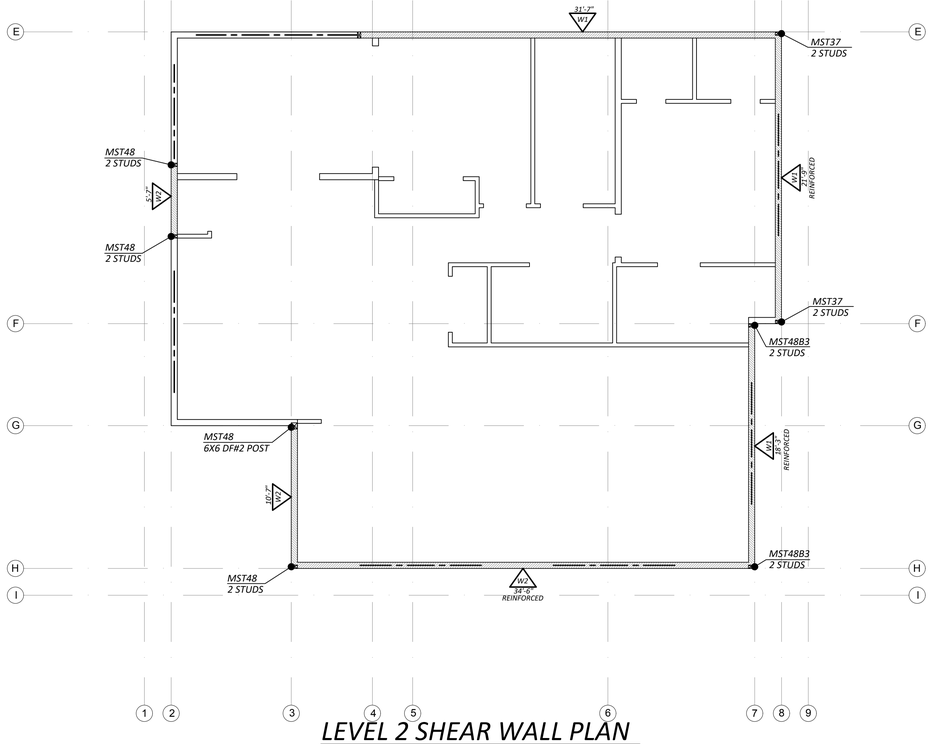

LEVEL 2 SHEAR WALL PLAN

3/16" = 1'-0"

NOTES:

1. UNLESS SPECIFIED ON PLANS, ALL EXTERIOR WALL SHALL BE SHEAR WALL W1, SEE SHEAR WALL TABLE ON THIS SHEET.
2. SEE DETAIL 10 ON SHEET S4.3 FOR REINFORCED SHEAR WALL REQUIREMENT.

PIERUCCIONI E&C, LLC
CHON PIERUCCIONI, PE
3128 N. BENNETT ST. TACOMA, WA 98407
PIERUCCIONIENGINEERING@GMAIL.COM
206.949.7866

REUSE OF DOCUMENTS
THIS DOCUMENT AND THE IDEAS AND DESIGNS INCORPORATED HEREIN, AS AN INSTRUMENT OF PROFESSIONAL SERVICE, ARE THE PROPERTY OF PIERUCCIONI E&C AND ARE NOT TO BE USED OR REPRODUCED IN WHOLE OR IN PART WITHOUT THE WRITTEN AUTHORIZATION OF PIERUCCIONI E&C, LLC

PRCNC20250692

City of Puyallup
Development & Permitting Services
ISSUED PERMIT

Building	Planning
Engineering	Public Works
Fire	Traffic

EAST TOWN CROSSING
CLUBHOUSE WITH MANAGER'S APARTMENT
PIONEER & SHAW PUYALLUP WA

REVISIONS

01	CITY REVIEW COMMENTS

REVISIONS

DRAWN BY:	CP
CHECKED BY:	CP
DATE:	2025.02.28
TITLE:	SHEAR WALL PLAN
PROJECT # :	----
SHEET:	S3.4

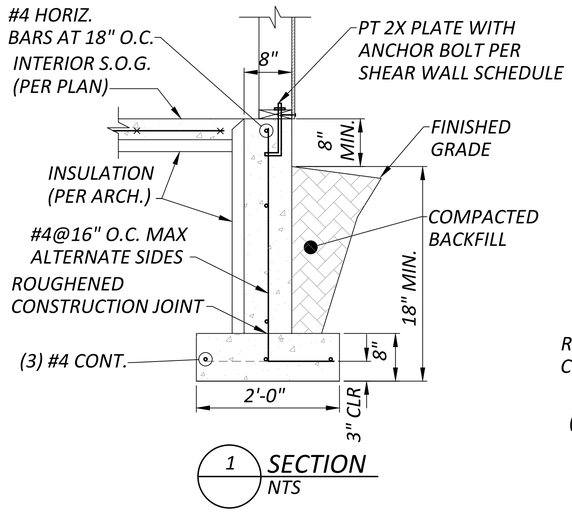

1 SECTION
NTS

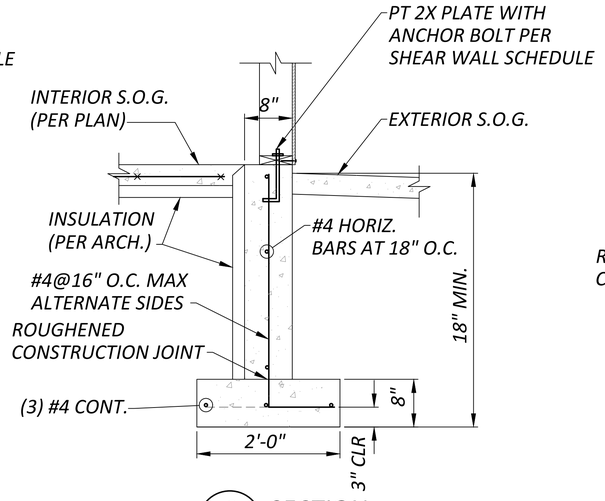

2 SECTION
NTS

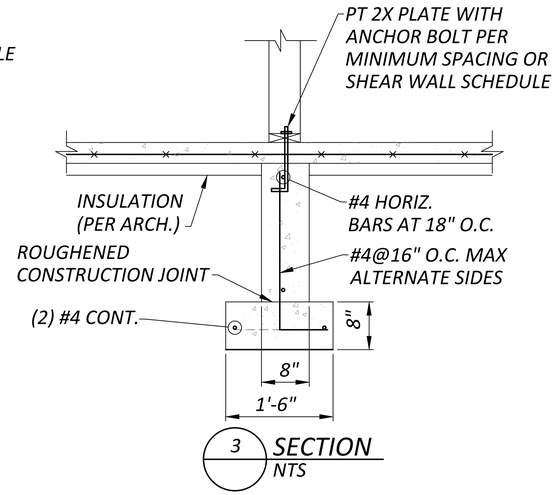

3 SECTION
NTS

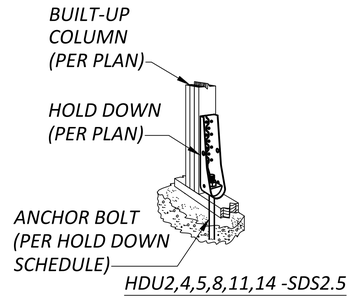

4 TYPICAL FOUNDATION HOLDDOWN DETAIL
NTS

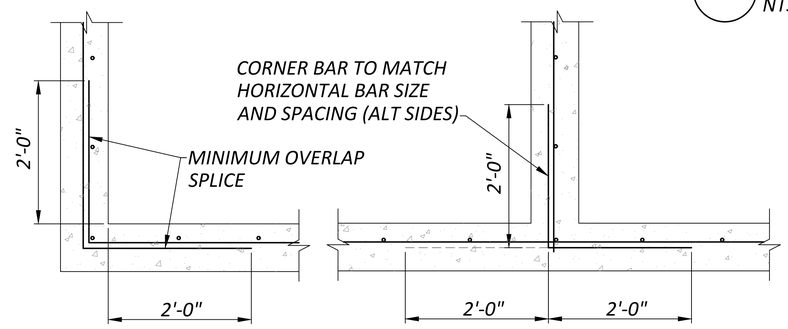

5 TYPICAL FOUNDATION CORNER & INTERSECTION DETAIL
NTS

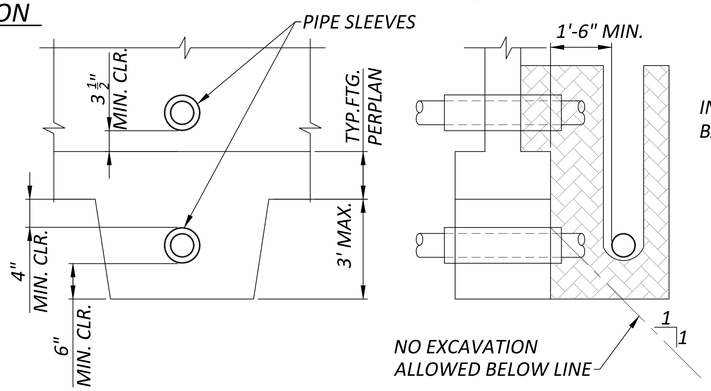

6 TYPICAL PIPER TRENCH DETAIL
NTS

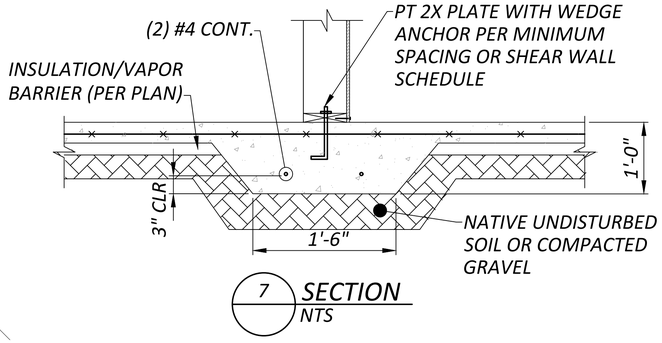

7 SECTION
NTS

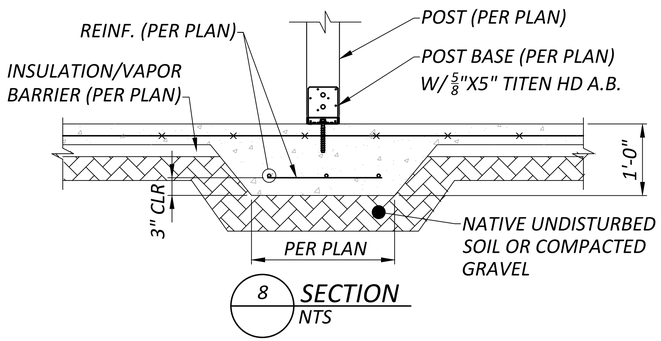

8 SECTION
NTS

PIERUCCIONI E&C, LLC
CHON PIERUCCIONI, PE
3128 N. BENNETT ST. TACOMA, WA 98407
PIERUCCIONIENGINEERING@GMAIL.COM
206.949.7866

REUSE OF DOCUMENTS
THIS DOCUMENT AND THE IDEAS AND DESIGNS INCORPORATED HEREIN, AS AN INSTRUMENT OF PROFESSIONAL SERVICE, ARE THE PROPERTY OF PIERUCCIONI E&C AND ARE NOT TO BE USED OR REPRODUCED IN WHOLE OR IN PART WITHOUT THE WRITTEN AUTHORIZATION OF PIERUCCIONI E&C

PRCNC20250692

City of Puyallup
Development & Permitting Services
ISSUED PERMIT
Building | Planning
Engineering | Public Works
Fire | Traffic

EAST TOWN CROSSING
CLUBHOUSE WITH MANAGER'S APARTMENT
PIONEER & SHAW PUYALLUP WA

REVISIONS

01	----

REVISIONS

DRAWN BY: CP
CHECKED BY: CP
DATE: 2025.02.28
TITLE: DETAILS
PROJECT # : ----
SHEET:

S4.1

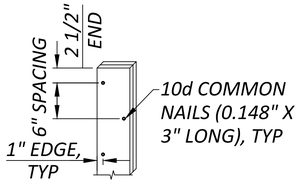

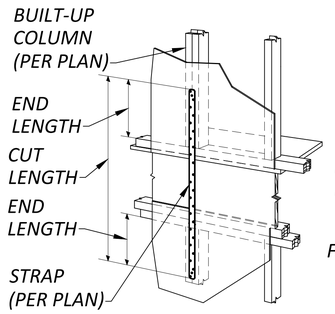

CS14, 16, 18, 20, 22
CMSTC12,14,16

MST37,48,60, & 72

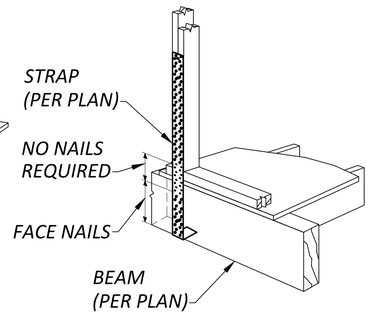

MSTC48B3 & MSTC66B3

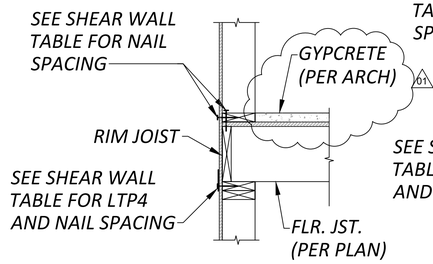

3 SECTION
NTS

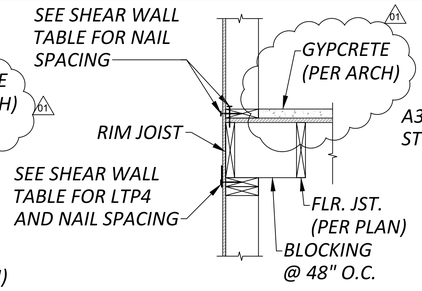

4 SECTION
NTS

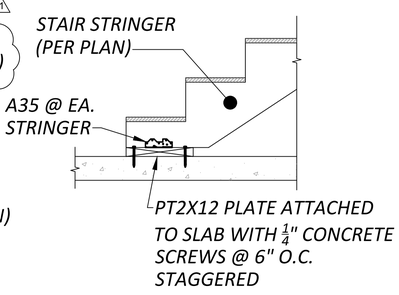

5 SECTION
NTS

1 TYPICAL BUILT-UP COLUMN/BEAM DETAIL
NTS

2 TYPICAL STRAP HOLDDOWN DETAIL
NTS

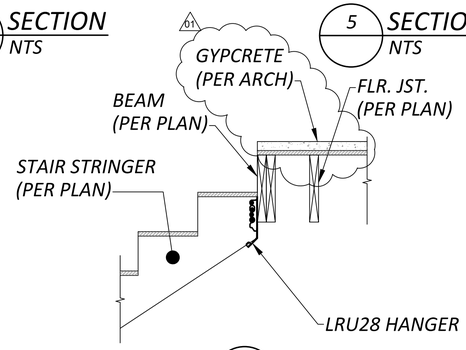

6 SECTION
NTS

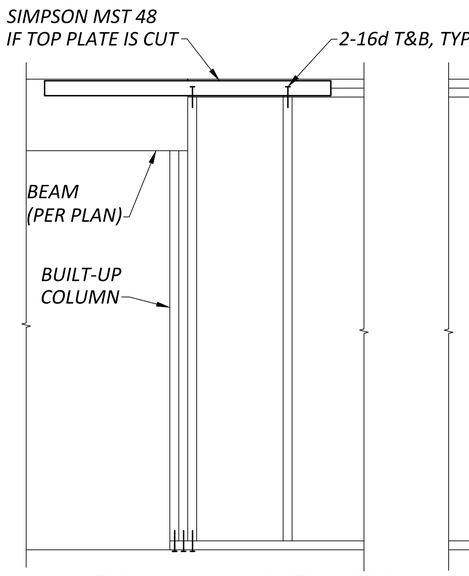

7 TYPICAL WALL DETAIL FOR OPENINGS 5' AND GREATER
NTS

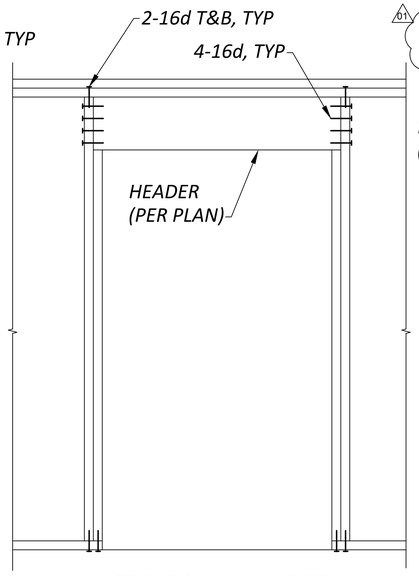

8 TYPICAL WALL DETAIL FOR DOOR OPENINGS
NTS

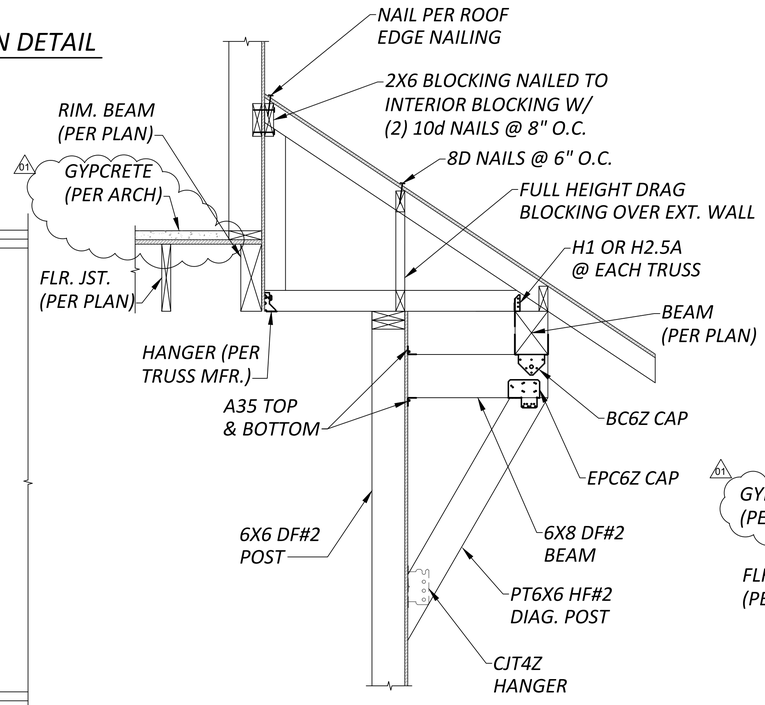

9 SECTION
NTS

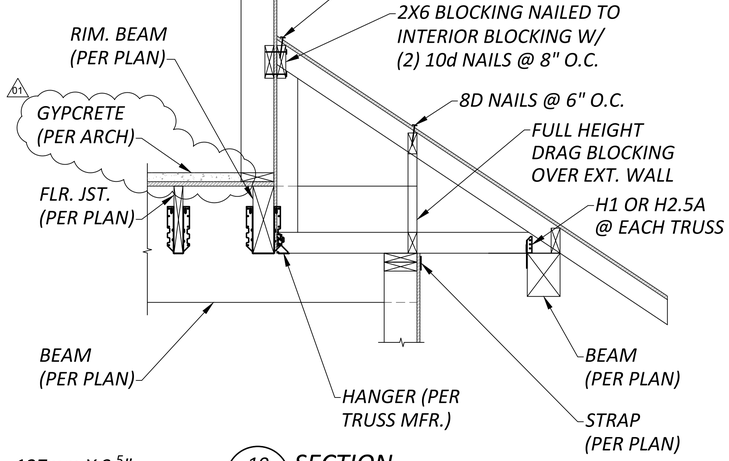

10 SECTION
NTS

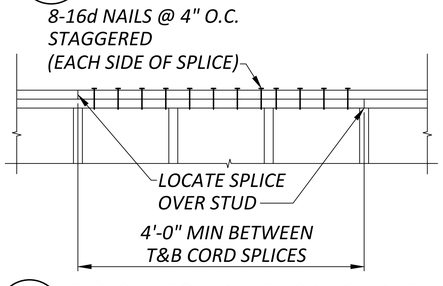

11 TYPICAL TOP PLATE SPLICE DETAIL
NTS

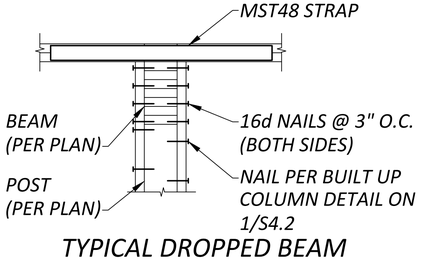

12 TYPICAL DROPPED BEAM @ PLATE BREAK
NTS

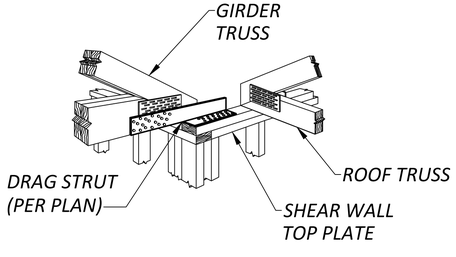

13 TYPICAL DRAG STRUT DETAIL
NTS

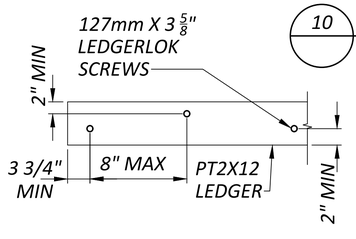

14 LEDGER DETAIL
N.T.S.

PIERUCCIONI E&C, LLC
CHON PIERUCCIONI, PE
3128 N. BENNETT ST. TACOMA, WA 98407
PIERUCCIONIENGINEERING@GMAIL.COM
206.949.7866

REUSE OF DOCUMENTS
THIS DOCUMENT AND THE IDEAS AND DESIGNS INCORPORATED HEREIN, AS AN INSTRUMENT OF PROFESSIONAL SERVICE, ARE THE PROPERTY OF PIERUCCIONI E&C AND ARE NOT TO BE USED OR REPRODUCED IN WHOLE OR IN PART WITHOUT THE WRITTEN AUTHORIZATION OF PIERUCCIONI E&C

PRCNC20250692

City of Puyallup
Development & Permitting Services
ISSUED PERMIT
Building | Planning
Engineering | Public Works
Fire | Traffic

EAST TOWN CROSSING
CLUBHOUSE WITH MANAGER'S APARTMENT
PIONEER & SHAW PUYALLUP WA

REVISIONS

01	CITY REVIEW COMMENTS	

REVISIONS

DRAWN BY: CP
CHECKED BY: CP
DATE: 2025.02.28
TITLE: DETAILS
PROJECT # : ----
SHEET:

S4.2

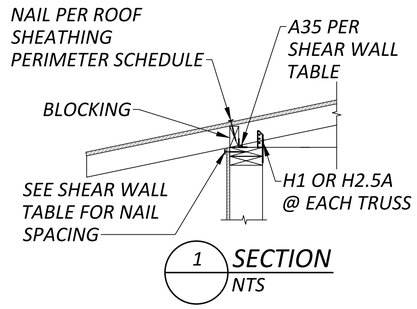

1 SECTION
NTS

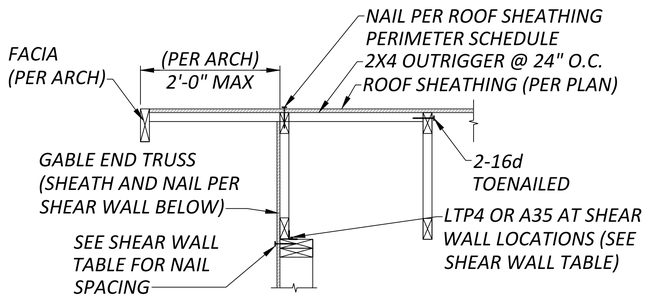

2 SECTION
NTS

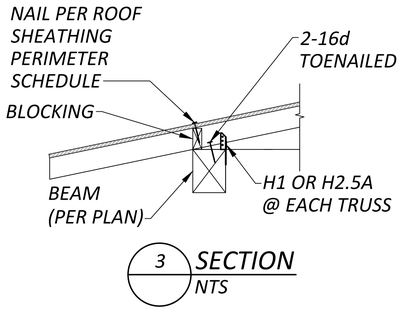

3 SECTION
NTS

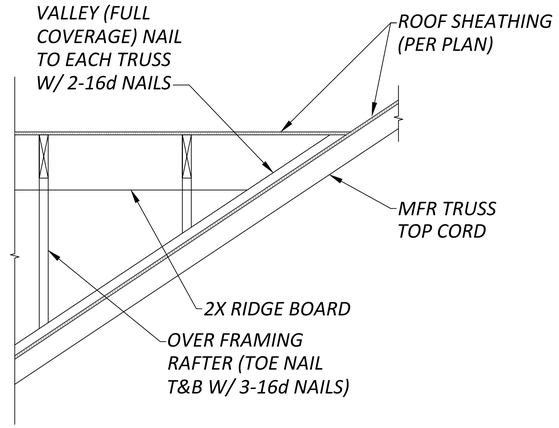

4 TYPICAL OVER FRAMING DETAIL
NTS

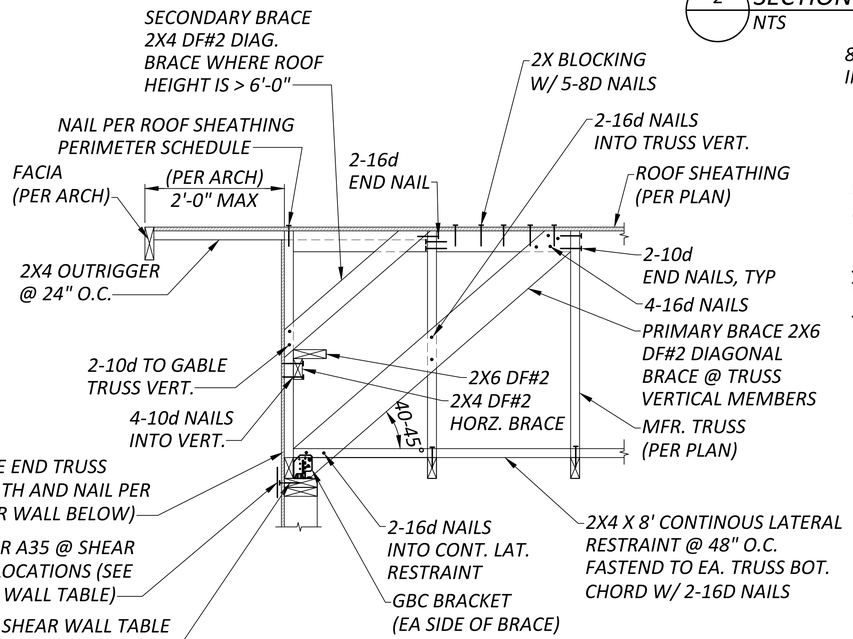

5 TYPICAL GABLE WALL BRACE DETAIL
NTS

TRUSS MANUFACTURERS RECOMMENDATIONS MAY SUPERCEDE THIS DETAIL

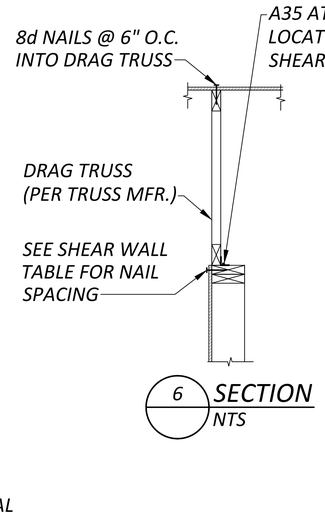

6 SECTION
NTS

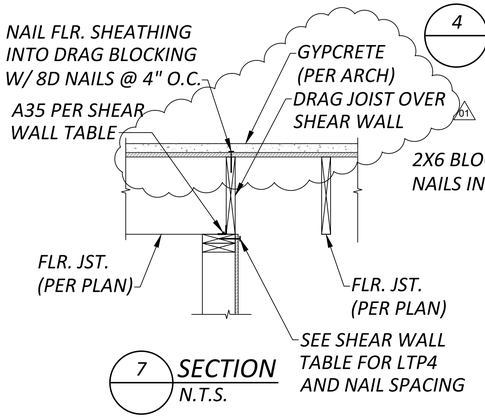

7 SECTION
N.T.S.

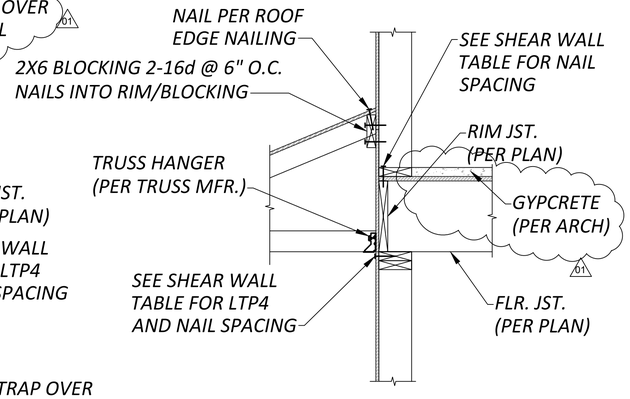

8 SECTION
N.T.S.

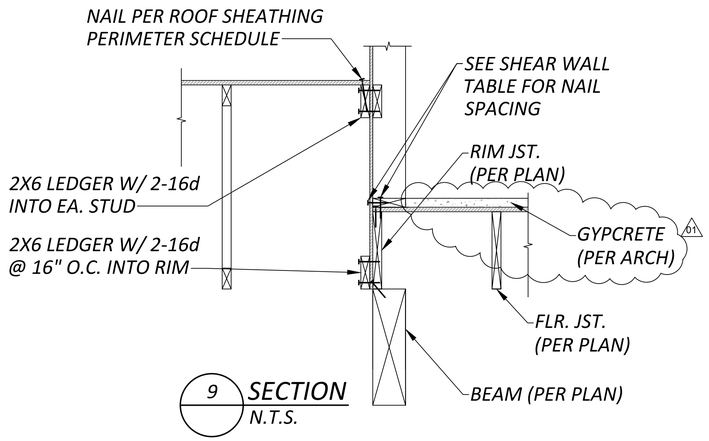

9 SECTION
N.T.S.

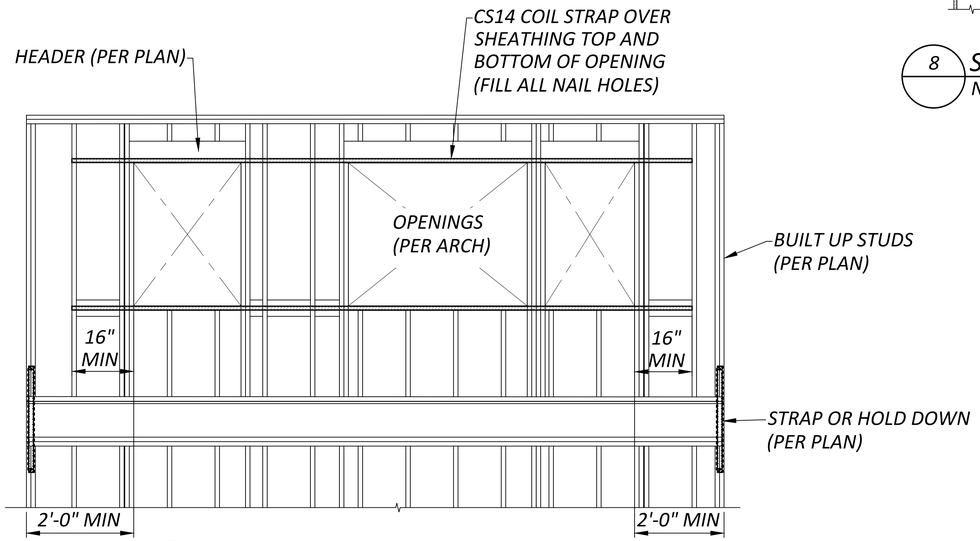

10 TYPICAL REINFORCED OPENING DETAIL
N.T.S.

PIERUCCIONI E&C, LLC
CHON PIERUCCIONI, PE
3128 N. BENNETT ST. TACOMA, WA 98407
PIERUCCIONIENGINEERING@GMAIL.COM
206.949.7886

REUSE OF DOCUMENTS
THIS DOCUMENT AND THE IDEAS AND DESIGNS INCORPORATED HERIN, AS INSTRUMENTS OF PROFESSIONAL SERVICE, ARE THE PROPERTY OF PIERUCCIONI E&C, LLC AND SHALL NOT BE REPRODUCED IN WHOLE OR IN PART WITHOUT THE WRITTEN AUTHORIZATION OF PIERUCCIONI E&C

PRCNC20250692

City of Puyallup
Development & Permitting Services
ISSUED PERMIT
Building | Planning
Engineering | Public Works
Fire | Traffic

EAST TOWN CROSSING
CLUBHOUSE WITH MANAGER'S APARTMENT
PIONEER & SHAW PUYALLUP WA

REVISIONS

01	CITY REVIEW COMMENTS

REVISIONS

DRAWN BY:	CP
CHECKED BY:	CP
DATE:	2025.02.28
TITLE:	DETAILS
PROJECT # :	----
SHEET:	S4.3

GENERAL NOTES

GENERAL NOTES – MECHANICAL

1. REFERENCE TO RELATED WORK: "REF" INDICATIONS DENOTE WORK COVERED ELSEWHERE (ARCHITECTURAL, STRUCTURAL, CIVIL, ELECTRICAL, LANDSCAPE, OR KITCHEN), OR ITEM BASED ON A SPECIFIC MANUFACTURER'S DIMENSIONS (VERIFY).
2. ELECTRICAL CHARACTERISTICS: REFER TO ELECTRICAL DRAWINGS FOR ELECTRICAL CHARACTERISTICS (VOLTAGES, ETC. OF MECHANICAL EQUIPMENT, UNLESS OTHERWISE INDICATED.
3. CODES: COMPLETE INSTALLATION OF THE MECHANICAL SYSTEM SHALL BE PER THE APPLICABLE BUILDING, MECHANICAL, ENERGY, PLUMBING, FIRE, AND HEALTH CODES AND REGULATIONS AS ADOPTED BY THE LOCAL AHJ.
4. PREPARE AND SUBMIT FOR REVIEW A SHOP DRAWING BASED ON FINAL STRUCTURAL SHOP DRAWINGS FOR LOCATING AND ROUTING ALL DUCTWORK, DAMPERS, EQUIPMENT, PIPING, ETC.
   A. COORDINATE FLOOR AND BEAM PENETRATIONS WITH STRUCTURAL.
   B. COORDINATE FINAL LOCATION AND ROUTING WITH CEILING, LIGHTS, WALLS, FIRE SPRINKLER PIPING, AND OTHER TRADES WORK.
   C. INCLUDE ADDITIONAL OFFSETS, ELBOWS, ROUTING, EQUIVALENT DUCT SIZING EXCHANGE, RELOCATING, ETC. AS REQUIRED FOR A COMPLETE OPERATING MECHANICAL SYSTEM.
   D. PROVIDE SHOP DRAWINGS AT NO ADDITIONAL COST TO THE OWNER.
5. MECHANICAL CONTRACTOR SHALL LOCATE AND COORDINATE EXACT LOCATION OF ALL MECHANICAL EQUIPMENT WITHIN THE STRUCTURE.
6. ACCESS DOORS: COORDINATE WITH ARCHITECT AND LOCATE ALL ACCESS DOORS ON SHOP DRAWINGS PRIOR TO BEGINNING OF CONSTRUCTION. ACCESS DOORS IN FIRE RATED STRUCTURE SHALL BE FIRE RATED. VERIFY ACCESS DOOR LOCATIONS WITH GENERAL CONTRACTOR PRIOR TO BIDDING.
7. RATED PENETRATION: DUCT PENETRATIONS THROUGH RATED ENCLOSURES SHALL BE FIRE/SMOKE DAMPERED PER THE LATEST EDITION OF THE UNDERWRITERS LABORATORIES(UL) FIRE RESISTANCE WITH HOURLY RATINGS FOR THROUGH–PENETRATION FIRE STOPS SYSTEM VOLUME #2, OR SHALL BE INSTALLED IN STRICT ACCORDANCE WITH THE MANUFACTURER'S UL LISTINGS (3M OR EQUIVALENT). DETERMINE REQUIREMENTS WITH GENERAL CONTRACTOR PRIOR TO BID.
8. EXHAUST OUTLETS: SOURCE–SPECIFIC FANS SHALL BE VENTED TO OUTDOORS WITH A MINIMUM 3' CLEARANCE BETWEEN VENT OUTLETS AND BUILDING OPENINGS, AND 10' MINIMUM BETWEEN VENT OUTLETS AND MECHANICAL AIR INTAKES.
9. ROOF PENETRATIONS: SEE ARCHITECTURAL DRAWINGS FOR ROOF CAP, ROOF CURB, ROOF DRAIN, AND VTR DETAILS.
10. EXPOSED PIPING: PROVIDE CHROME PLATING FOR EXPOSED PIPING IN FINISHED ROOMS.
11. PENETRATIONS: PROVIDE ESCUTCHEON PLATES FOR EXPOSED PIPING PENETRATIONS AND SHEET METAL FLASHING FOR EXPOSED DUCTWORK PENETRATIONS.
12. SHAFT AND PLENUM CONNECTIONS: SEAL CONNECTIONS TO AIR SHAFTS AIRTIGHT. PROVIDE AIRTIGHT SEAL AROUND PENETRATIONS IN AIR PLENUMS.
13. LIGHT FIXTURE CLEARANCE: COORDINATE LOCATIONS OF MECHANICAL WORK TO PROVIDE CLEARANCES OVER LIGHTING FIXTURES FOR REMOVAL AND REPLACEMENT.
14. MOTORS: COMPLY WITH ENERGY CODE ENFORCED BY AHJ FOR MINIMUM EFFICIENCIES UNDER FULL LOAD.
15. ACCESS CLEARANCES FOR MAINTENANCE AND REPLACEMENT: VERIFY PHYSICAL DIMENSIONS OF EQUIPMENT TO ENSURE THAT ACCESS CLEARANCES CAN BE MET. COORDINATE LOCATIONS OF MECHANICAL WORK AND WORK OF OTHER TRADES TO PROVIDE ACCESS CLEARANCES FOR SERVICE AND MAINTENANCE.

COORDINATION REQUIREMENTS

1. PIPING: COORDINATE WITH STRUCTURAL FOR EXACT LOCATION OF ALL STRUCTURAL FRAMING AND FOOTINGS AND FINALIZE THE EXACT ROUTING OF ALL PIPES WITH STRUCTURAL AND AT THE SITE PRIOR AND DURING THE CONSTRUCTION.
2. DUCTWORK: LOCATE AND COORDINATE THE EXACT LOCATION OF DUCTWORK WITH STRUCTURAL PLANS AND WITH THE GENERAL CONTRACTOR PRIOR TO INSTALLATION OF ANY STRUCTURE OR EQUIPMENT. COORDINATE WITH FRAMING CONTRACTOR TO ASSURE JOIST SPACES LINE UP WHEN DUCTWORK MUST PASS THROUGH DIFFERENT JOIST SPACES.
3. ADJUSTMENTS: ALL EQUIPMENT, MOTORS, FANS GAS BURNERS, IGNITION DEVICES, DRIVES, ETC. SHALL BE ADJUSTED AND BALANCED TO OPERATE AT SPECIFIED RATINGS AS REQUIRED FOR THIS PROJECT SITE AND ACCOUNTING FOR ELEVATION ABOVE SEA LEVEL.
4. APPROVALS: MECHANICAL AND PLUMBING EQUIPMENT SHALL BE APPROVED FOR INSTALLATION IN THE PROJECT LOCATION AND SHALL HAVE ALL CERTIFICATIONS AND RATINGS TO MEET ALL ENERGY, POLLUTION, ENVIRONMENTAL, SEISMIC, ETC. CODES AND REGULATIONS. THE CONTRACTOR SHALL COORDINATE WITH HIS MANUFACTURE SUPPLIERS AND SHALL INCLUDE ALL COSTS REQUIRED TO MEET THESE REQUIREMENTS IN HIS BID.
5. FIRE PROTECTION: CONTRACTOR SHALL PROVIDE A FULLY DESIGNED FIRE PROTECTION SPRINKLER SYSTEM IN COMPLIANCE WITH NFPA AND LOCAL CODES. PROVIDE DESIGN, PERMITS, MATERIALS, INSTALLATION, TESTING AND ALL OTHER FOR A FULLY OPERATIONAL SYSTEM. LOCATION OF ALL PIPING TO BE COORDINATED WITH OTHER TRADES.

PIPING NOTES

1. DISASSEMBLY PROVISIONS: PROVIDE UNIONS OR FLANGES AT PIPING CONNECTIONS TO EQUIPMENT, COILS, TRAPS, CONTROL VALVES, AND OTHER COMPONENTS TO ALLOW DISASSEMBLY FOR MAINTENANCE.
2. REDUCERS: PROVIDE AS REQUIRED FROM LINE PIPE SIZE TO EQUIPMENT, TRAP, COIL, AND CONTROL VALVE CONNECTION SIZES.
3. OFFSETS: PROVIDE FOR BRANCH LINES TO EQUIPMENT.
4. DIELECTRIC UNIONS: PROVIDE AT CONNECTIONS OF DISSIMILAR PIPE.
5. REFRIGERANT PIPING: PROVIDE SIZING & INSTALLATION IN STRICT ACCORDANCE WITH MANUFACTURER'S INSTRUCTIONS.
6. CONDENSATE DRAIN: PROVIDE A P–TRAP FOR EACH HVAC UNIT CONDENSATE PAN WITH PLUG TEES FOR CLEANING. CONDENSATE DRAINS SHALL BE DISCHARGED TO AN INDIRECT WASTE OR OUTSIDE.

INSULATION/LINING NOTES

1. ENERGY CODE: AS A MINIMUM, COMPLY WITH THICKNESSES AND TYPES LISTED IN ENERGY CODE ENFORCED BY AHJ.
2. EXTENT OF INTERNAL DUCT LINING:
   A. GRILLE AND DIFFUSER BOXES AND BOOTS.
   B. TRANSFER DUCTS.
   C. THE FIRST 10 FEET OF SUPPLY AND RETURN DUCTWORK FROM THE AIR HANDLER.
3. EXTENT OF EXTERNAL DUCT INSULATION:
   A. SUPPLY AND RETURN AIR IN UNCONDITIONED SPACES, MECHANICAL ROOMS, ELECTRICAL ROOMS, AND EQUIPMENT ROOMS NOT SPECIFIED TO BE INTERNALLY LINED.
   B. SUPPLY AIR ABOVE CEILINGS OR EXPOSED NOT SPECIFIED TO BE INTERNALLY LINED.
   C. OUTDOOR AIR INTAKE.
4. MISCELLANEOUS DUCT FITTINGS (CONICAL TAKEOFFS, ETC.): WRAP WITH INSULATION FOR CONDENSATION CONTROL.

PLAN NOTES

1. DUCTWORK SHALL BE METALLIC DUCTWORK
2. TEST AND BALANCE WORK SHALL BE PERFORMED BY AN INDEPENDENT TEST AND BALANCE AGENCY. PROVIDE (3) COPIES OF TEST AND BALANCE REPORT TO OWNER.
3. COORDINATE DUCTWORK WITH MISCELLANEOUS OBSTRUCTIONS IN CEILING SPACE.
4. RESTROOM EXHAUST SHALL BE A MINIMUM OF 10' FROM ANY MECHANICAL OUTSIDE AIR INTAKES.
5. ROUTE DUCTWORK UNDERNEATH JOISTS UON.
6. TRANSITION DUCT UNDER BEAMS AND DUCTS. FIELD VERIFY AVAILABLE CEILING CAVITY DIMENSIONS.
7. COORDINATE MOUNTING HEIGHT OF DIFFUSERS WITH ARCHITECTURAL PLANS.

SHEET METAL NOTES

1. REFERENCE: SMACNA HVAC DUCT CONSTRUCTION STANDARDS, METAL AND FLEXIBLE, CURRENT EDITION.
2. CLEARANCE: COORDINATE DUCTWORK WITH MISCELLANEOUS OBSTRUCTIONS IN CEILING SPACE.
3. ROUND ELBOWS AND OFFSETS: FULL RADIUS (R/D = 1.5), 5–PIECE SEGMENTED OR STAMPED. REFER TO SMACNA HVAC FIG 2–7, 3–3. DO NOT USE ANGLED OFFSET (TYPE 1). MITERED OFFSET (TYPE 2) MAY BE USED UP TO 30 DEGREE OFFSET ANGLE.
4. ROUND TEES AND LATERALS: CONICAL TEE PER SMACNA HVAC FIG 3–5; DO NOT USE STRAIGHT TEE; DO NOT USE CONICAL SADDLE TAP FOR EXPOSED DUCTWORK IN FINISHED SPACES. 90–DEGREE TEE WITH OVAL TO ROUND TAP, LATERAL, AND 45–DEGREE RECTANGULAR LEAD–IN PER SMACNA HVAC FIG 3–4.
5. RECTANGULAR ELBOWS AND OFFSETS: FULL RADIUS WHERE SPACE PERMITS, R/W = 1.5; OTHERWISE USE SQUARE CORNER ELBOW WITH TURNING VANES.
6. RECTANGULAR DIVIDED FLOW FITTINGS: USE GENERALLY, EXCEPT BRANCHES TO TERMINALS; SMACNA HVAC FIG 2–5, TYPES 1, 2, 4A, AND 4B. DO NOT USE TYPE 3.
7. TURNING VANES: H.E.P. MANUFACTURER OR APPROVED HIGH EFFICIENCY PROFILE AIRFOIL TYPE FOR RECTANGULAR SQUARE THROAT ELBOWS. ACOUSTICAL TYPE FOR RETURN AIR MITERED ELBOWS.
8. TAKEOFFS TO OPENINGS: CONICAL TYPE WITH VOLUME DAMPER FOR ROUND DUCT BRANCHES PER SMACNA HVAC FIG 2–6, MINIMUM INLET DIAMETER 2 INCHES LARGER THAN DUCT SIZE. 45 DEGREE ENTRY FITTING FOR RECTANGULAR DUCT BRANCHES PER SMACNA HVAC FIG 2–6.
9. FLEXIBLE CONNECTIONS: PROVIDE AT EACH DUCT CONNECTION TO FANS, PACKAGED HVAC EQUIPMENT, EXTERNALLY ISOLATED AIR HANDLING UNITS, FAN COIL UNITS, AND SIMILAR EQUIPMENT. EXCEPTION: EQUIPMENT IN CORRIDOR CEILING SPACES WHERE FIRE RATING IS REQUIRED.
10. ALL DUCT WORK SHALL BE CLASSIFIED FOR LOW PRESSURE SYSTEMS PER IMC SECTION 603.
11. ALL DUCTS AND JOINTS SHALL BE SEALED PER IMC SECTION 603.

HVAC NOTES

1. ATTACHMENTS: AIR DISTRIBUTION OUTLETS AND LOUVERS SHALL HAVE ALL REQUIRED ACCESSORIES AND ATTACHMENTS FOR A COMPLETE CONNECTION TO THE SPECIFIC TYPE OF STRUCTURE THAT THEY ARE BEING ATTACHED TO. THIS INCLUDES, BUT IS NOT LIMITED TO, EXTERIOR BRICKS, GWB WALLS, GWB CEILING, ETC.
2. DUCTWORK: DUCTWORK SHALL BE SMOOTH SHEET METAL (CLASS–1). DUCTWORK THROUGH FIRE RATED STRUCTURE AND FLOOR SHALL BE MIN. 26 GA. STEEL. MAXIMUM LENGTH OF FLEXIBLE DUCTS SHALL BE 5'–0", UNLESS OTHERWISE NOTED ON DRAWINGS. DUCTWORK SIZES SHOWN ARE INSIDE CLEAR DIMENSIONS.
3. SEISMIC: PROVIDE SEISMIC RESTRAINTS FOR MECHANICAL EQUIPMENT, PIPING, AND DUCTWORK PER SMACNA AND LOCAL REGULATIONS.
4. FILTER CLEARANCE: PROVIDE ADEQUATE CLEARANCE FOR CHANGING AIR FILTERS.
5. DUCTWORK AND PIPING OUTSIDE OF MECHANICAL ROOMS SHALL BE CONCEALED, COORDINATE WITH THE GENERAL CONTRACTOR TO FUR–OUT AS REQUIRED.
6. FIRE RATINGS: RATED FLOOR/CEILING JOINT SPACES HAVING DUCTWORK INSIDE THEM SHALL BE FIRE/SMOKE PROTECTED TO MAINTAIN THE 1–HOUR FLOOR/CEILING RATING PER LOCAL JURISDICTIONS. EXHAUST DUCTWORK PENETRATING THE 1–HOUR ROOF/CEILING OR FLOOR/CEILING ASSEMBLY SHALL HAVE ACCESSIBLE CEILING FIRE DAMPERS. ALTERNATIVELY, THE EXHAUST DUCTWORK SHALL BE ROUTED INSIDE A RATED SHAFT TO PROTECT THE CEILING/ROOF RATING PER THE LOCAL JURISDICTIONS.
7. FIRESTOP: PIPE, DUCT AND CONDUIT PENETRATIONS THROUGH RATED ASSEMBLIES SHALL BE FIRE AND SMOKE STOPPED PER CODE.
8. DUCTWORK: DUCTWORK SHALL BE SMOOTH SHEET METAL (CLASS–1). DUCTWORK THROUGH FIRE RATED STRUCTURE AND FLOOR SHALL BE MIN. 26 GA. STEEL. MAXIMUM LENGTH OF FLEXIBLE DUCTS SHALL BE 5'–0" UNLESS OTHERWISE NOTED ON DRAWINGS. DUCTWORK SIZES SHOWN ARE INSIDE CLEAR DIMENSIONS.
9. VOLUME DAMPERS: PROVIDE AN ACCESSIBLE MANUAL VOLUME DAMPER FOR EACH SUPPLY, RETURN, OSA AND EXHAUST OPENING, LOCATED AS FAR UPSTREAM AS POSSIBLE FROM THE OPENING. PROVIDE A MANUAL VOLUME DAMPER FOR BRANCH MAINS SERVING MORE THAN ONE OPENING. VOLUME DAMPERS IN NON–ACCESSIBLE CEILING SHALL HAVE A CONTROL ARM EXTENDED TO AN ACCESSIBLE LOCATION. PROVIDE "YOUNG" REGULATOR OR EQUAL. EXACT LOCATION OF CONTROL DEVICES VISIBLE IN FINISHED SPACES SHALL BE COORDINATED WITH THE ARCHITECT.
10. CORRIDOR THERMOSTAT: PROVIDE TAMPERPROOF THERMOSTATS IN CORRIDORS. DO NOT PROVIDE PLASTIC GUARDS TO MAKE THE THERMOSTATS TAMPERPROOF. PROVIDE BLANK SECURABLE THERMOSTAT COVERS.

APPLICABLE CODE

BUILDING CODE:

2021 WASHINGTON STATE ENERGY CODE–RESIDENTIAL BY WASHINGTON ADMINSTRATIVE CODE CHAP 51–50 (WSEC)

2021 INTERNATIONAL RESIDENTIAL CODE WITH ADMINISTRATIVE CODE CHAP 51–51 (WSRC)

2021 INTERNATIONAL MECHANICAL CODE WITH ADMINISTRATIVE CODE CHAP 51–52 (WSMC)

1

DRAWINGS ARE DIAGRAMMATIC, SHOWING THE GENERAL LOCATION, TYPE, LAYOUT, AND EQUIPMENT REQUIRED. THE DRAWINGS SHALL NOT BE SCALED FOR EXACT MEASUREMENT. REFER TO ARCHITECTURAL DRAWINGS FOR DIMENSIONS. REFER TO MANUFACTURER'S STANDARD INSTALLATION DRAWINGS FOR EQUIPMENT CONNECTIONS AND INSTALLATION REQUIREMENTS. PROVIDE DUCTWORK, CONNECTIONS, ACCESSORIES, OFFSETS, AND MATERIALS NECESSARY FOR A COMPLETE SYSTEM.

PRE-CON MEETING NOTES

CONTRACTORS SHALL ATTEND A PRE–CONSTRUCTION MEETING WITH THE ENGINEER FOR THE PURPOSE OF REVIEWING THE WORK PRIOR TO ORDERING ANY EQUIPMENT OR PERFORMING ANY WORK. THE MEETING SHALL BE LOCATED AT THE PROJECT SITE ON A DATE AND TIME TO BE MUTUALLY AGREED. THE MEETING WILL BE A WORKING SESSION. THE MEETING WILL BE FACILITATED BY THE ENGINEER AND THE AGENDA WILL INCLUDE A DETAILED REVIEW OF THE PLANS AND SPECIFICATIONS, CROSS CHECK WITH OTHER TRADES FOR COORDINATION ISSUES, REVIEW OF PROPOSED PRODUCTS, REVIEW OF PLANNED MEANS AND METHODS,AND ON–SITE INVESTIGATION OF FIELD CONDITIONS RELATIVE TO EXISTING CONDITIONS THAT COULD AFFECT THE WORK. PERSONS ATTENDING THE MEETING SHALL BE KNOWLEDGEABLE OF THE PROJECT AND SHALL BE THE SPECIFIC PERSONS INTENDED TO CONTINUE WITH THE PROJECT THROUGH TO COMPLETION. IF REQUIRED, REVISED PLANS WILL BE ISSUED THROUGH OFFICIAL CHANNELS. CHANGES IN THE BID PRICE WILL BE DISCUSSED, BUT NO CHANGE ORDERS WILL BE ISSUED UNLESS PROCESSED THOUGH OFFICIAL CHANNELS. IT SHALL BE UNDERSTOOD THAT THE ENGINEER HAS NO AUTHORITY TO ISSUE CHANGE ORDERS.

THE FOLLOWING TRADES SHALL BE REPRESENTED FOR THE MINIMUM TIME INDICATED:

MECHANICAL SHEET METAL	4 HOURS
PLUMBING/PIPING	4 HOURS
ELECTRICAL	4 HOURS
SPRINKLER	2 HOURS
GENERAL CONTRACTOR	ALL SESSIONS

ANNOTATIONS

ACU	AIR CONDITIONING UNIT
AFF	ABOVE FINISHED FLOOR
AHJ	AUTHORITY HAVING JURISDICTION
AHU	AIR HANDLING UNIT
BDD	BACKDRAFT DAMPER
BHP	BRAKE HORSEPOWER
BTUH	BRITISH THERMAL UNIT PER HOUR
C	COMMON
CAP	CAPACITY
CC	COOLING COIL
CD	CEILING DIFFUSER
CFM	CUBIC FEET PER MINUTE
CLG	CEILING, COOLING
CO	CLEANOUT
COMB	COMBUSTION
CONT	CONTINUE, CONTROL
CONTR	CONTRACTOR
COP	COEFFICIENT OF PERFORMANCE
CWS	CHILLED WATER SUPPLY
CWR	CHILLED WATER RETURN
D	DIAMETER
DB	DRY BULB, DECIBEL
DEG	DEGREE
DIM	DIMENSION
DISCH	DISCHARGE
DN	DOWN
EA	EXHAUST AIR
EAT	ENTERING AIR TEMPERATURE
EER	ENERGY EFFICIENCY RATIO
EF	EXHAUST FAN
EFF	EFFICIENCY
EG	EXHAUST GRILLE, ENGINE GENERATOR
ELEC	ELECTRIC
EQUIV	EQUIVALENT
ESP	EXTERNAL STATIC PRESSURE
EXH	EXHAUST
EXT	EXTERIOR, EXTERNAL
F	FAHRENHEIT
FD	FIRE DAMPER
FCU	FAN COIL UNIT
FLR	FLOOR
FPM	FEET PER MINUTE
FPS	FEET PER SECOND
FSD	FIRE/SMOKE DAMPER
G	GAS
GRD	GRILLES, REGISTERS, AND DIFFUSERS
GWB	GYPSUM WALLBOARD
HORIZ	HORIZONTAL
HP	HORSEPOWER, HEAT PUMP
HRU	HEAT RECOVERY UNIT
HVAC	HEATING, VENTILATING, AND AIR CONDITIONING
HVU	HEATING AND VENTILATION UNIT
HWR	HIGH WALL RETURN, HOT WATER RETURN
HWS	HIGH WALL SUPPLY, HOT WATER SUPPLY
HX	HEAT EXCHANGER
ID	INDIRECT DRAIN, INSIDE DIAMETER
IN	INCH
KW	KILOWATT
L	LONG, LENGTH
LB	POUND
LWR	LOW WALL RETURN
LWS	LOW WALL SUPPLY
MBH	THOUSAND BTU PER HOUR
MECH	MECHANICAL
MCA	MINIMUM CIRCUIT AMPACITY
MOCP	MAXIMUM OVER CURRENT PROTECTION
MTD	MOUNTED
OSA	OUTDOOR AIR
OBD	OPPOSED BLADE DAMPER
OD	OUTSIDE DIMENSION OR DIAMETER
OPNG	OPENING
P	PUMP
PD	PRESSURE DROP
POC	POINT OF CONNECTION
PRV	PRESSURE REDUCING VALVE
PSIG	POUNDS PER SQUARE INCH GAUGE
RA	RETURN AIR
REF	REFERENCE
RF	RELIEF FAN
RG	RETURN GRILLE
RPM	REVOLUTIONS PER MINUTE
SA	SUPPLY AIR
SCH	SCHEDULE
SF	SUPPLY FAN, SQUARE FOOT
SENS	SENSIBLE
SG	SUPPLY GRILLE
SMACNA	SHEET METAL AND AIR CONDITIONING CONTRACTORS NATIONAL ASSOCIATION
SO	SCREENED OPENING
SP	STATIC PRESSURE
SS	STAINLESS STEEL, SANITARY SEWER
SQ	SQUARE
TG	TRANSFER GRILLE
TYP	TYPICAL
UH	UNIT HEATER
UON	UNLESS OTHERWISE NOTED
V	VENT
VENT	VENTILATION, VENTILATOR
VTR	VENT THRU ROOF
W	WASTE, WATT, WIDE
WB	WET BULB (TEMPERATURE)

SYMBOLS

PRCNC20250692

DUCTWORK

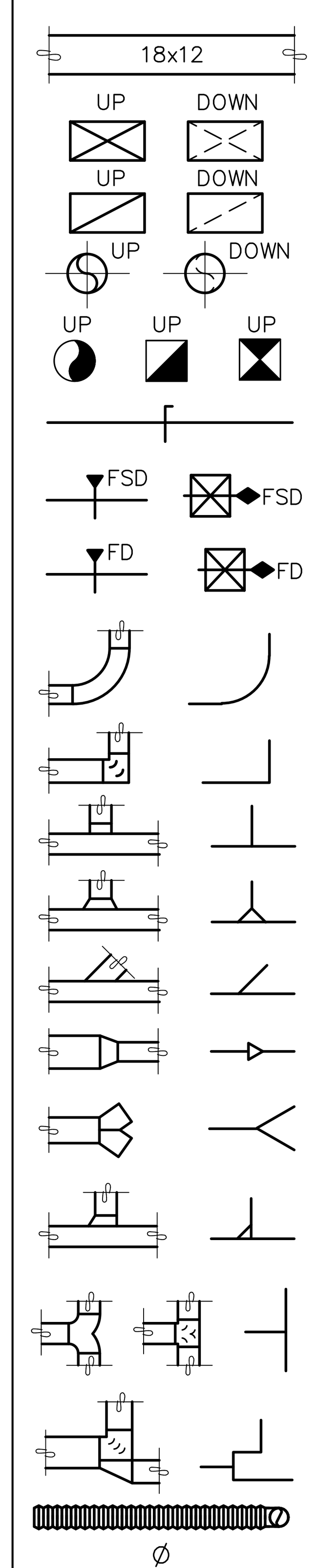

- DUCT (1ST FIGURE = SIDE SHOWN, 2ND FIGURE = SIDE NOT SHOWN)
- DUCT SECTION, POSITIVE PRESSURE
- DUCT SECTION, NEGATIVE PRESSURE
- ROUND DUCT SECTION
- DUCT PENETRATION THRU FLOOR OR ROOF
- VOLUME DAMPER
- FIRE/SMOKE DAMPER (--◀ = HORIZ DUCT, --◆ = VERT DUCT), 2–HR RATED, UON
- FIRE DAMPER (--◀ = HORIZ DUCT, --◆ = VERT DUCT), 2–HR RATED, UON
- 90° ELBOW, R/D OR R/W=1.5
- SQUARE CORNER ELBOW WITH TURNING VANES
- 90° TAKE–OFF OR TEE
- 90° CONICAL TAKE–OFF
- 45° LATERAL TAKE–OFF
- TRANSITION OR REDUCER (FOT = FLAT ON TOP, FOB = FLAT ON BOTTOM)
- WYE FITTING
- 90° RECTANGULAR TAKE–OFF WITH 45° TAPER
- 90° DIVERGING RECTANGULAR TEE, EITHER RADIUS OR TURNING VANES
- PARALLEL FLOW BRANCH CONNECTION, EITHER RADIUS OR TURNING VANES
- FLEXIBLE DUCT
- ROUND DUCT INDICATOR

EQUIPMENT

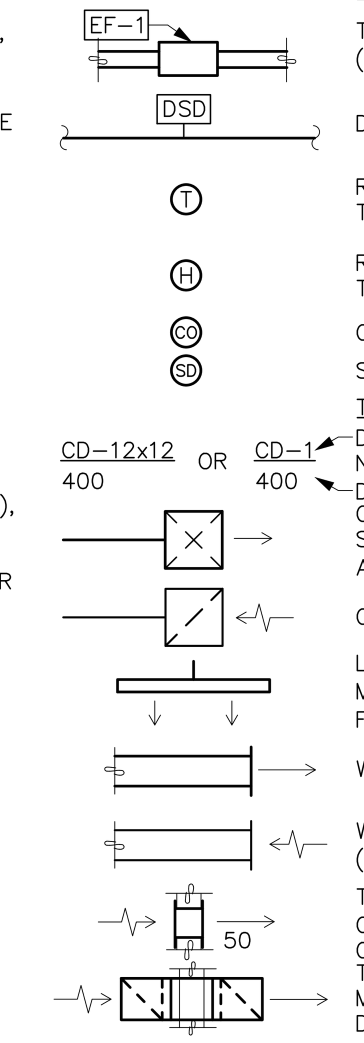

- TYPICAL EQUIPMENT DESIGNATION (EXHAUST FAN SHOWN)
- DUCT SMOKE DETECTOR
- ROOM THERMOSTAT OR TEMPERATURE TRANSMITTER
- ROOM HUMIDISTAT OR HUMIDITY TRANSMITTER
- CARBON MONOXIDE SENSOR
- SMOKE DETECTOR

TERMINALS

- DIFFUSER/GRILLE TYPE, AND NUMBER OR SIZE
- DESIGN CFM (WHERE APPLICABLE)
- CEILING DIFFUSER (FLOW ARROWS SHOWN FOR NON SYMMETRICAL AIRFLOW)
- CEILING RETURN/EXHAUST GRILLE
- LINEAR DIFFUSER, CEILING OR WALL MOUNTED (FLOW ARROWS SHOWN FOR NON SYMMETRICAL AIRFLOW)
- WALL SUPPLY GRILLE (SG)
- WALL RETURN/EXHAUST GRILLE (RG, EG)
- TRANSFER GRILLE (TG), DUCT CONNECTED, WALL MOUNTED W/ OPTIONAL CFM SHOWN
- TRANSFER GRILLE, CEILING MOUNTED WITH FULL–SIZED LINED DUCT CONNECTION

DRAWING INDEX

Sheet List Table

Sheet Number	Sheet Title	PERMIT SET 03/21/2025	PERMIT SET 03/21/2025				
M0.0	LEGEND, GENERAL NOTES, & DRAWING INDEX	X	X				
M0.1	PROJECT NOTES	X	X				
M0.2	TABLES & CALCULATIONS	X	X				
M0.3	MECHANICAL SCHEDULES	X	X				
M2.0	HVAC PLAN - LEVEL 1 & LEVEL 2	X	X				
M4.0	DETAILS & DIAGRAMS		X				
M4.1	DETAILS & DIAGRAMS		X				

City of Puyallup
Development & Permitting Services
ISSUED PERMIT
Building | Planning
Engineering | Public Works
Fire | Traffic

NO.	DATE	DESCRIPTION
1	7/9/25	PERMIT RESUBMITTAL

REVISIONS

ROBISON ENGINEERING, INC
19401 40TH AVE W., SUITE 302
LYNNWOOD, WA 98036
206-364-3343 TEL

JACOB J. O'BRIEN, STATE OF WASHINGTON, 23001780, REGISTERED PROFESSIONAL ENGINEER, 06/25/2025

DRAWN: OP
DESIGNED: ABE
CHECKED: PR
APPROVED: JMR

PROJECT: 810-010 East Town Crossing Mechanical
MULTIFAMILY DEVELOPMENT
PIONEER WAY & SHAW RD. PUYALLUP, WA

ROBISON ENGINEERING, INC
19401 4OTH AVE W. SUITE 302
LYNNWOOD, WA 98036
PHONE:(206)364-3343
REI PROJECT NO.: 810-010
CONTACT: ARIK ESPINELI

DATE: 07/09/2025

SHEET TITLE: LEGEND, GENERAL NOTES, & DRAWING INDEX

SHEET NO. M0.0

ENERGY CODE NOTES

PRCNC20250692

WASHINGTON STATE COMMISSIONING REQUIREMENTS

C408.1.1CONSTRUCTION DOCUMENTS SHALL CLEARLY INDICATE PROVISIONS FOR COMMISSIONING PROCESS. THE CONSTRUCTION DOCUMENTS SHALL MINIMALLY INCLUDE THE FOLLOWING:
1. A NARRATIVE DESCRIPTION OF THE ACTIVITIES THAT WILL BE ACCOMPLISHED DURING THE COMMISSIONING PROCESS. AT A MINIMUM, THE COMMISSIONING PROCESS IS REQUIRED TO INCLUDE:
   1.1. DEVELOPMENT AND EXECUTION OF THE COMMISSIONING PLAN, INCLUDING ALL SUBSECTIONS OF SECTION C408.1.2;
   1.2. THE CERTIFIED COMMISSIONING PROFESSIONAL'S REVIEW OF THE BUILDING DOCUMENTATION AND CLOSE OUT SUBMITTALS IN ACCORDANCE WITH SECTION C103.6; AND
   1.3. THE COMMISSIONING REPORT IN ACCORDANCE WITH SECTION C408.1.3.
2. ROLES, RESPONSIBILITIES AND REQUIRED QUALIFICATIONS OF THE CERTIFIED COMMISSIONING PROFESSIONAL.
3. A LISTING OF THE SPECIFIC EQUIPMENT, APPLIANCES OR SYSTEMS TO BE TESTED.

C408.1.2 A COMMISSIONING PLAN SHALL BE DEVELOPED BY THE PROJECT'S CERTIFIED COMMISSIONING PROFESSIONAL AND SHALL OUTLINE THE ORGANIZATION, SCHEDULE, ALLOCATION OF RESOURCES, AND DOCUMENTATION REQUIREMENTS OF THE COMMISSIONING PROCESS. THE PLAN SHALL ALSO INCLUDE THE FOLLOWING:
1. A NARRATIVE DESCRIPTION OF THE ACTIVITIES THAT WILL BE ACCOMPLISHED DURING EACH PHASE OF COMMISSIONING, INCLUDING THE PERSONNEL INTENDED TO ACCOMPLISH EACH OF THE ACTIVITIES, SYSTEMS TESTING AND BALANCING, FUNCTIONAL PERFORMANCE TESTING, AND VERIFICATION OF THE BUILDING DOCUMENTATION REQUIREMENTS IN SECTION C103.6.
2. ROLES AND RESPONSIBILITIES OF THE COMMISSIONING TEAM, INCLUDING THE NAME AND STATEMENT OF QUALIFICATIONS OF THE CERTIFIED COMMISSIONING PROFESSIONAL.
3. A LISTING OF THE SPECIFIC EQUIPMENT, APPLIANCES OR SYSTEMS TO BE TESTED AND A DESCRIPTION OF THE TESTS TO BE PERFORMED.

C408.1.2.1 WHERE THE CERTIFIED COMMISSIONING PROFESSIONAL'S CONTRACT OR EMPLOYMENT IS OTHER THAN DIRECTLY WITH THE BUILDING OWNER, AN IN-HOUSE COMMISSIONING DISCLOSURE AND CONFLICT MANAGEMENT PLAN SHALL BE A PART OF THE COMMISSIONING PROCESS. A COPY SHALL BE INCLUDED IN THE COMMISSIONING PLAN. THIS PLAN SHALL DISCLOSE THE CERTIFIED COMMISSIONING PROFESSIONAL'S CONTRACTUAL RELATIONSHIP WITH OTHER TEAM MEMBERS AND PROVIDE A CONFLICT MANAGEMENT PLAN DEMONSTRATING THAT THE CERTIFIED COMMISSIONING PROFESSIONAL IS FREE TO IDENTIFY ANY ISSUES DISCOVERED AND REPORT DIRECTLY TO THE OWNER.

C408.1.2.2 FUNCTIONAL PERFORMANCE TESTING SHALL BE CONDUCTED FOR MECHANICAL SYSTEMS IN SECTIONS C403; SERVICE WATER HEATING SYSTEMS IN SECTION C404; CONTROLLED RECEPTACLES AND LIGHTING CONTROL SYSTEMS IN SECTION C405; EQUIPMENT, APPLIANCES AND SYSTEMS INSTALLED TO COMPLY WITH SECTION C406 OR C407; ENERGY METERING IN SECTION C409; AND REFRIGERATION SYSTEMS IN SECTION C410. WRITTEN PROCEDURES WHICH CLEARLY DESCRIBE THE INDIVIDUAL SYSTEMATIC TEST PROCEDURES, THE EXPECTED SYSTEM RESPONSE OR ACCEPTANCE CRITERIA FOR EACH PROCEDURE, THE ACTUAL RESPONSE OR FINDINGS, AND ANY PERTINENT DISCUSSION SHALL BE FOLLOWED. THIS TESTING SHALL INCLUDE CONTROL SYSTEMS WHICH WILL BE TESTED TO DOCUMENT THAT CONTROL DEVICES, COMPONENTS, EQUIPMENT, AND SYSTEMS ARE CALIBRATED AND ADJUSTED TO OPERATE IN ACCORDANCE WITH APPROVED CONSTRUCTION DOCUMENTS. TESTING SHALL AFFIRM THE CONDITIONS REQUIRED WITHIN SECTIONS C408.2 THROUGH C408.7 UNDER SYSTEM TESTING.

C408.1.2.3 FOR PROJECTS WITH SEVEN OR FEWER SIMILAR SYSTEMS, EACH SYSTEM SHALL BE TESTED. FOR PROJECTS WITH MORE THAN SEVEN SYSTEMS, TESTING SHALL BE DONE FOR EACH UNIQUE COMBINATION OF CONTROLS TYPE. WHERE MULTIPLES OF EACH UNIQUE COMBINATION OF CONTROL TYPES EXIST, NO FEWER THAN 20 PERCENT OF EACH COMBINATION SHALL BE TESTED UNLESS THE CODE OFFICIAL OR DESIGN PROFESSIONAL REQUIRES A HIGHER PERCENTAGE TO BE TESTED. WHERE 30 PERCENT OR MORE OF THE TESTED SYSTEM FAIL, ALL REMAINING IDENTICAL COMBINATIONS SHALL BE TESTED.

C408.1.2.4 DEFICIENCIES FOUND DURING TESTING SHALL BE RESOLVED INCLUDING CORRECTIONS AND RETESTING.

C408.1.3 A FINAL COMMISSIONING REPORT SHALL BE COMPLETED AND CERTIFIED BY THE CERTIFIED COMMISSIONING PROFESSIONAL AND DELIVERED TO THE BUILDING OWNER OR OWNER'S AUTHORIZED AGENT. THE REPORT SHALL BE ORGANIZED WITH MECHANICAL, SERVICE WATER HEATING, CONTROLLED RECEPTACLE AND LIGHTING CONTROL SYSTEMS, ENERGY METERING, AND REFRIGERATION FINDINGS IN SEPARATE SECTIONS TO ALLOW INDEPENDENT REVIEW. THE REPORT SHALL RECORD THE ACTIVITIES AND RESULTS OF THE COMMISSIONING PROCESS AND BE DEVELOPED FROM THE FINAL COMMISSIONING PLAN WITH ALL OF ITS ATTACHED APPENDICES. THE REPORT SHALL INCLUDE:
1. RESULTS OF FUNCTIONAL PERFORMANCE TESTS.
2. DISPOSITION OF DEFICIENCIES FOUND DURING TESTING, INCLUDING DETAILS OF CORRECTIVE MEASURES USED OR PROPOSED.
3. FUNCTIONAL PERFORMANCE TEST PROCEDURES USED DURING THE COMMISSIONING PROCESS INCLUDING MEASURABLE CRITERIA FOR TEST ACCEPTANCE, PROVIDED HEREIN FOR REPEATABILITY.
4. COMMISSIONING PLAN.
5. TESTING, ADJUSTING AND BALANCING REPORT. EXCEPTION: DEFERRED TESTS WHICH CANNOT BE PERFORMED AT THE TIME OF REPORT PREPARATION DUE TO CLIMATIC CONDITIONS.

C408.1.4 PRIOR TO THE FINAL MECHANICAL, PLUMBING AND ELECTRICAL INSPECTIONS OR OBTAINING A CERTIFICATE OF OCCUPANCY, THE CERTIFIED COMMISSIONING PROFESSIONAL SHALL PROVIDE EVIDENCE OF BUILDING COMMISSIONING IN ACCORDANCE WITH THE PROVISIONS OF THIS SECTION.

C408.1.4.1 BUILDINGS, OR PORTIONS THEREOF, SHALL NOT BE CONSIDERED ACCEPTABLE FOR A FINAL INSPECTION PURSUANT TO SECTION C104.2.6 UNTIL THE CODE OFFICIAL HAS RECEIVED A LETTER OF TRANSMITTAL FROM THE BUILDING OWNER OR OWNER'S REPRESENTATIVE ACKNOWLEDGING THAT THE BUILDING OWNER OR OWNER'S AUTHORIZED AGENT HAS RECEIVED THE COMMISSIONING REPORT. COMPLETION OF COMMISSIONING COMPLIANCE CHECKLIST (FIGURE C408.1.4.1) IS DEEMED TO SATISFY THIS REQUIREMENT. PHASED ACCEPTANCE OF COMMISSIONING COMPLIANCE CHECKLIST FOR PORTIONS OF THE WORK SPECIFIC TO THE TRADE THAT IS BEING INSPECTED IS PERMISSIBLE WHERE ACCEPTED BY THE CODE OFFICIAL AND WHERE THE CERTIFIED COMMISSIONING PROFESSIONAL REMAINS RESPONSIBLE FOR COMPLETION OF THE COMMISSIONING PROCESS. IF THERE ARE UNRESOLVED DEFICIENCIES WHEN THE FINAL INSPECTION IS SCHEDULED, THE COMMISSIONING REPORT SHALL BE SUBMITTED AND SHALL DESCRIBE THE UNRESOLVED DEFICIENCIES.

C408.1.4.2 THE CODE OFFICIAL SHALL BE PERMITTED TO REQUIRE THAT A COPY OF THE COMMISSIONING REPORT BE MADE AVAILABLE FOR REVIEW BY THE CODE OFFICIAL.

C408.2 MECHANICAL EQUIPMENT AND CONTROLS SUBJECT TO SECTION C403 SHALL BE INCLUDED IN THE COMMISSIONING PROCESS REQUIRED BY SECTION C408.1. THE COMMISSIONING PROCESS SHALL MINIMALLY INCLUDE ALL ENERGY CODE REQUIREMENTS FOR WHICH THE CODE STATES THAT EQUIPMENT OR CONTROLS SHALL"BE CAPABLE OF" OR CONFIGURED TO" PERFORM SPECIFIC FUNCTIONS. EXCEPTION: MECHANICAL SYSTEMS ARE EXEMPT FROM THE COMMISSIONING PROCESS WHERE THE INSTALLED TOTAL MECHANICAL EQUIPMENT CAPACITY IS LESS THAN 240,000 BTU/H COOLING CAPACITY AND LESS THAN 300,000 BTU/H HEATING CAPACITY.

C408.2.2 HVAC SYSTEMS SHALL BE BALANCED IN ACCORDANCE WITH GENERALLY ACCEPTED ENGINEERING STANDARDS. AIR AND WATER FLOW RATES SHALL BE MEASURED AND ADJUSTED TO DELIVER FINAL FLOW RATES WITHIN THE TOLERANCES PROVIDED IN THE PROJECT SPECIFICATIONS. TEST AND BALANCE ACTIVITIES SHALL INCLUDE AIR SYSTEM AND HYDRONIC SYSTEM BALANCING.

C408.2.2.1 EACH SUPPLY AIR OUTLET AND ZONE TERMINAL DEVICE SHALL BE EQUIPPED WITH MEANS FOR AIR BALANCING IN ACCORDANCE WITH THE REQUIREMENTS OF CHAPTER 6 OF THE INTERNATIONAL MECHANICAL CODE. DISCHARGE DAMPERS USED FOR AIR SYSTEM BALANCING ARE PROHIBITED ON CONSTANT VOLUME FANS AND VARIABLE VOLUME FANS WITH MOTORS 10 HP (18.6 KW) AND LARGER. AIR SYSTEMS SHALL BE BALANCED IN A MANNER TO FIRST MINIMIZE THROTTLING LOSSES THEN, FOR FANS WITH SYSTEM POWER OF GREATER THAN 1 HP (0.74 KW), FAN SPEED SHALL BE ADJUSTED TO MEET DESIGN FLOW CONDITIONS. EXCEPTION: FANS WITH FAN MOTORS OF 1 HP (0.74 KW) OR LESS.

C408.2.2.2 INDIVIDUAL HYDRONIC HEATING AND COOLING COILS SHALL BE EQUIPPED WITH MEANS FOR BALANCING AND MEASURING FLOW. HYDRONIC SYSTEMS SHALL BE PROPORTIONATELY BALANCED IN A MANNER TO FIRST MINIMIZE THROTTLING LOSSES, THEN THE PUMP IMPELLER SHALL BE TRIMMED OR PUMP SPEED SHALL BE ADJUSTED TO MEET DESIGN FLOW CONDITIONS. EACH HYDRONIC SYSTEM SHALL HAVE EITHER THE CAPABILITY TO MEASURE PRESSURE ACROSS THE PUMP, OR TEST PORTS AT EACH SIDE OF EACH PUMP. EXCEPTION: THE FOLLOWING EQUIPMENT IS NOT REQUIRED TO BE EQUIPPED WITH MEANS FOR BALANCING OR MEASURING FLOW:
1. PUMPS WITH PUMP MOTORS OF 5 HP (3.7 KW) OR LESS.
2. WHERE THROTTLING RESULTS IN NO GREATER THAN FIVE PERCENT OF THE NAMEPLATE HORSEPOWER DRAW ABOVE THAT REQUIRED IF THE IMPELLER WERE TRIMMED.

C408.2.3 FUNCTIONAL PERFORMANCE TESTING SHALL DEMONSTRATE THE COMPONENTS, SYSTEMS, AND SYSTEM-TO-SYSTEM INTERFACING RELATIONSHIPS ARE INSTALLED AND OPERATE IN ACCORDANCE WITH APPROVED CONSTRUCTION DOCUMENTS. TESTING SHALL INCLUDE THE SEQUENCE OF OPERATION, AND BE CONDUCTED UNDER FULL-LOAD, OART-LOAD AND THE FOLLOWING CONDITIONS:
1. ALL MODES AS DESCRIBED IN THE SEQUENCE OF OPERATION;
2. REDUNDANT OR AUTOMATIC BACK-UP MODE;
3. PERFORMANCE OF ALARMS; AND
4. MODE OF OPERATION UPON LOSS OF POWER AND RESTORATION OF POWER.

C408.3 SERVICE WATER HEATING EQUIPMENT AND CONTROLS SUBJECT TO SECTION C404 SHALL BE INCLUDED IN THE COMMISSIONING PROCESS REQUIRED BY SECTION C408.1. THE COMMISSIONING PROCESS SHALL MINIMALLY INCLUDE EQUIPMENT AND COMPONENTS INSTALLED TO MEET ALL ENERGY CODE REQUIREMENTS FOR DEVICES TO "START," "AUTOMATICALLY TURN OFF," "AUTOMATICALLY ADJUST," "LIMIT OPERATION," AND "LIMIT THE TEMPERATURE" AND "BE CONFIGURED TO."

C408.4 CONTROLLED RECEPTACLES AND LIGHTING CONTROL SYSTEMS SUBJECT TO SECTION C405 SHALL BE INCLUDED IN THE COMMISSIONING PROCESS REQUIRED BY SECTION C408.1. THE CONFIGURATION AND FUNCTION OF CONTROLLED RECEPTACLES AND LIGHTING CONTROL SYSTEMS REQUIRED BY THIS CODE SHALL BE TESTED AND SHALL COMPLY WITH SECTION C408.4.1 EXCEPTION: LIGHTING CONTROL SYSTEMS ARE EXEMPT FROM THE COMMISSIONING PROCESS IN BUILDINGS WHERE:
1. THE TOTAL INSTALLED LIGHTING LOAD IS LESS THAN 20 KW, AND
2. THE LIGHTING LOAD CONTROLLED BY OCCUPANCY SENSORS OR AUTOMATIC DAYLIGHTING CONTROLS IS LESS THAN 10 KW.

C408.5 EQUIPMENT, COMPONENTS, CONTROLS OR CONFIGURATION SETTINGS FOR SYSTEMS WHICH ARE INCLUDED IN THE PROJECT TO COMPLY WITH SECTION C406 OR C407 SHALL BE INCLUDED IN THE COMMISSIONING PROCESS REQUIRED BY SECTION C408.1.

C408.6 ENERGY METERING SYSTEMS REQUIRED BY SECTION C409 SHALL COMPLY WITH SECTION C408.6 AND BE INCLUDED IN THE COMMISSIONING PROCESS REQUIRED BY SECTION C408.1. THE COMMISSIONING PROCESS SHALL INCLUDE ALL ENERGY METERING EQUIPMENT AND CONTROLS REQUIRED BY SECTION C409.

C408.7 ALL INSTALLED REFRIGERATION SYSTEMS SUBJECT TO SECTION C410 SHALL BE INCLUDED IN THE COMMISSIONING PROCESS REQUIRED BY SECTION C408.1. EXCEPTIONS:
1. SELF-CONTAINED REFRIGERATION SYSTEMS ARE EXEMPT FROM THE COMMISSIONING PROCESS.
2. TOTAL INSTALLED CAPACITY FOR REFRIGERATION IS EQUAL TO OR LESS THAN 240,000 BTUH.

WASHINGTON STATE CLOSE OUT DOCUMENTATION

C103.6 THE CONSTRUCTION DOCUMENTS SHALL SPECIFY THAT THE DOCUMENTS DESCRIBED IN THIS SECTION BE PROVIDED TO THE BUILDING OWNER OR OWNER'S AUTHORIZED AGENT WITHIN A MAXIMUM 90 DAYS OF THE DATE OF RECEIPT OF THE CERTIFICATION OF OCCUPANCY. (C103.6.1 RECORD DOCUMENTS, C103.6.2 BUILDING OPERATIONS AND MAINTENANCE INFORMATION, C103.6.2.1 MANUALS, C103.6.3 COMPLIANCE DOCUMENTATION, C103.6.4 SYSTEMS OPERATION TRAINING)

WASHINGTON STATE ENERGY CODE

C403.4.1 THE SUPPLY OF HEATING AND COOLING ENERGY TO EACH ZONE SHALL BE CONTROLLED BY INDIVIDUAL THERMOSTATIC CONTROLS CAPABLE OF RESPONDING TO TEMPERATURE WITHIN THE ZONE.

C403.4.1.1 UNITARY AIR COOLED HEAT PUMPS SHALL INCLUDE MICROPROCESSOR CONTROLS THAT MINIMIZE SUPPLEMENTAL HEAT USAGE DURING START-UP, SET-UP, AND DEFROST CONDITIONS. THESE CONTROLS SHALL ANTICIPATE NEED FOR HEAT AND USE COMPRESSION HEATING AS THE FIRST STAGE OF HEAT. CONTROLS SHALL INDICATE WHEN SUPPLEMENTAL HEATING IS BEING USED THROUGH VISUAL MEANS (E.G., LED INDICATORS). HEAT PUMPS EQUIPPED WITH SUPPLEMENTAL HEATERS SHALL BE INSTALLED WITH CONTROLS THAT PREVENT SUPPLEMENTAL HEATER OPERATION ABOVE 40°F.

C403.4.1.2 WHERE USED TO CONTROL BOTH HEATING AND COOLING, ZONE THERMOSTATIC CONTROLS SHALL BE CONFIGURED TO PROVIDE A TEMPERATURE RANGE OR DEADBAND OF AT LEAST 5°F WITHIN WHICH THE SUPPLY OF HEATING AND COOLING ENERGY TO THE ZONE IS SHUT OFF OR REDUCED TO A MINIMUM.

C403.7.8.1 OUTDOOR AIR SUPPLY, EXHAUST OPENINGS AND RELIEF OUTLETS AND STAIRWAY AND ELEVATOR HOISTWAY SHAFT VENTS SHALL BE PROVIDED WITH CLASS I MOTORIZED DAMPERS. SEE SECTIONS C403.10.1 AND C403.10.2 FOR DUCTWORK INSULATION REQUIREMENTS UPSTREAM AND DOWNSTREAM OF THE SHUTOFF DAMPER. EXCEPTION:
1. GRAVITY (NONMOTORIZED) DAMPERS SHALL BE PERMITTED IN LIEU OF MOTORIZED DAMPERS AS FOLLOWS:
   1.1. RELIEF DAMPERS SERVING SYSTEMS LESS THAN 5,000 CFM TOTAL SUPPLY SHALL BE PERMITTED IN BUILDINGS LESS THAN THREE STORIES IN HEIGHT.
   1.2. GRAVITY (NONMOTORIZED) DAMPERS WHERE THE DESIGN OUTDOOR AIR INTAKE OR EXHAUST CAPACITY DOES NOT EXCEED 400 CFM.
   1.3. SYSTEMS SERVING AREAS WHICH REQUIRE CONTINUOUS OPERATION FOR 24/7 OCCUPANCY SCHEDULES.
2. SHUTOFF DAMPERS ARE NOT REQUIRED IN:
   2.1. COMBUSTION AIR INTAKES.
   2.2. SYSTEMS SERVING AREAS WHICH REQUIRE CONTINUOUS OPERATION IN ANIMAL HOSPITALS, KENNELS AND POUNDS, LABORATORIES, GROUP H, I AND R OCCUPANCIES.
   2.3. SUBDUCT EXHAUST SYSTEMS OR OTHER SYSTEMS THAT ARE REQUIRED TO OPERATE CONTINUOUSLY BY THE INTERNATIONAL MECHANICAL CODE.
   2.4. TYPE I GREASE EXHAUST SYSTEMS OR OTHER SYSTEMS WHERE DAMPERS ARE PROHIBITED BY THE INTERNATIONAL MECHANICAL CODE TO BE IN THE AIRSTREAM.
   2.5. UNCONDITIONED STAIRWELLS OR UNCONDITIONED ELEVATOR HOISTWAY SHAFTS THAT ARE ONLY CONNECTED TO UNCONDITIONED SPACES.

C403.7.8.2 RETURN AIR OPENINGS USED FOR AIRSIDE ECONOMIZER OPERATION SHALL BE EQUIPPED WITH CLASS I MOTORIZED DAMPERS.

C403.7.8.3 CLASS I DAMPERS SHALL HAVE A MAXIMUM LEAKAGE RATE OF 4 CFM/SF WHEN TESTED IN ACCORDANCE WITH AMCA 500D AND SHALL BE LABELED BY AN APPROVED AGENCY FOR SUCH PURPOSE. GRAVITY (NONMOTORIZED) DAMPERS SHALL HAVE AN AIR LEAKAGE RATE NOT GREATER THAN 20 CFM/SF WHERE NOT LESS THAN 24 INCHES IN EITHER DIMENSION AND 40 CFM/SF WHERE LESS THAN 24 INCHES IN EITHER DIMENSION. THE RATE OF AIR LEAKAGE SHALL BE DETERMINED AT 1.0 INCH W.G. WHEN TESTED IN ACCORDANCE WITH AMCA500D FOR SUCH PURPOSE. THE DAMPERS SHALL BE LABELED BY AN APPROVED AGENCY. GRAVITY DAMPERS FOR VENTILATION AIR INTAKES SHALL BE PROTECTED FROM DIRECT EXPOSURE TO WIND. EXCEPTIONS:
1. GRAVITY (NONMOTORIZED) DAMPERS ARE NOT REQUIRED TO BE TESTED TO VERIFY THE AIR LEAKAGE RATING WHEN INSTALLED IN EXHAUST SYSTEMS WHERE THE EXHAUST CAPACITY DOES NOT EXCEED 400 CFM AND THE GRAVITY DAMPER IS PROVIDED WITH A GASKETED SEAL.
2. MOTORIZED DAMPERS ON RETURN AIR OPENINGS IN UNITARY PACKAGED EQUIPMENT THAT HAVE THE MINIMUM LEAKAGE RATE AVAILABLE FROM THE MANUFACTURER.

C403.7.8.4 OUTDOOR AIR INTAKE, RELIEF AND EXHAUST SHUTOFF DAMPERS SHALL BE INSTALLED WITH AUTOMATIC CONTROLS CONFIGURED TO CLOSE WHEN THE SYSTEMS OR SPACES SERVED ARE NOT IN USE OR DURING UNOCCUPIED PERIOD WARM-UP AND SETBACK OPERATION, UNLESS THE SYSTEMS SERVED REQUIRE OUTDOOR OR EXHAUST AIR IN ACCORDANCE WITH THE INTERNATIONAL MECHANICAL CODE OR THE DAMPERS ARE OPENED TO PROVIDE INTENTIONAL ECONOMIZER COOLING. STAIRWAY AND ELEVATOR HOISTWAY SHAFT VENT DAMPERS SHALL BE INSTALLED WITH AUTOMATIC CONTROLS CONFIGURED TO OPEN UPON THE ACTIVATION OF ANY FIRE ALARM INITIATING DEVICE OF THE BUILDING'S FIRE ALARM SYSTEM OF THE INTERRUPTION OF POWER TO THE DAMPER.

C403.10.1.1 DUCTS, SHAFTS AND PLENUMS CONVEYING OUTSIDE AIR FROM THE EXTERIOR OF THE BUILDING TO THE MECHANICAL SYSTEM SHALL MEET ALL AIR LEAKAGE AND BUILDING ENVELOPE INSULATION REQUIREMENTS OF SECTION C402, PLUS BUILDING ENVELOPE VAPOR CONTROL REQUIREMENTS FROM THE INTERNATIONAL BUILDING CODE, EXTENDING CONTINUOUSLY FROM THE BUILDING EXTERIOR TO THE AUTOMATIC SHUTOFF DAMPER OR HEATING OR COOLING EQUIPMENT. FOR THE PURPOSES OF BUILDING ENVELOPE INSULATION REQUIREMENTS, DUCT SURFACES SHALL BE INSULATED WITH THE MINIMUM INSULATION VALUES IN TABLE C403.10.1.1. DUCT SURFACES INCLUDED AS PART OF THE BUILDING ENVELOPE SHALL NOT BE USED IN THE CALCULATION OF MAXIMUM GLAZING AREA AS DESCRIBED IN SECTION C402.4.1. EXCEPTIONS:
1. OUTDOOR AIR DUCTS SERVING INDIVIDUAL SUPPLY AIR UNITS WITH LESS THAN 2,800 CFM OF TOTAL SUPPLY AIR CAPACITY, PROVIDED THESE ARE INSULATED TO THE MINIMUM INSULATION VALUES IN TABLE C403.10.1.1.
2. UNHEATED EQUIPMENT ROOMS WITH COMBUSTION AIR LOUVERS, PROVIDED THEY ARE ISOLATED FROM CONDITIONED SPACE AT SIDES, TOP AND BOTTOM OF THE ROOM WITH R-11 NOMINAL INSULATION.

C403.10.1.2 ALL OTHER SUPPLY AND RETURN AIR DUCTS AND PLENUMS SHALL BE INSULATED WITH A MINIMUM OF R-6 INSULATION WHERE LOCATED IN UNCONDITIONED SPACES, AND WHERE LOCATED OUTSIDE THE BUILDING WITH A MINIMUM OF R-8 INSULATION IN CLIMATE ZONE 4 AND R-12 INSULATION IN CLIMATE ZONE 5. WHERE LOCATED WITHIN A BUILDING ENVELOPE ASSEMBLY, THE DUCT OR PLENUM SHALL BE SEPARATED FROM THE BUILDING EXTERIOR OR UNCONDITIONED OR EXEMPT SPACES BY A MINIMUM INSULATION VALUE AS REQUIRED FOR EXTERIOR WALLS BY SECTION C402.1.3. EXCEPTIONS:
1. WHERE LOCATED WITHIN EQUIPMENT.
2. SUPPLY AND RETURN DUCTWORK LOCATED IN UNCONDITIONED SPACES WHERE THE DESIGN TEMPERATURE DIFFERENCE BETWEEN THE INTERIOR AND EXTERIOR OF THE DUCT OR PLENUM DOES NOT EXCEED 15°F AND INSULATED IN ACCORDANCE WITH TABLE C403.10.1.2.

WHERE LOCATED WITHIN CONDITIONED SPACE, SUPPLY DUCTS WHICH CONVEY SUPPLY AIR AT TEMPERATURES LESS THAN 55°F OR GREATER THAN 105°F SHALL BE INSULATED WITH A MINIMUM INSULATION R-VALUE IN ACCORDANCE WITH TABLE C403.10.1.2. EXCEPTION: DUCTWORK EXPOSED TO VIEW WITHIN A ZONE THAT SERVES THAT ZONE IS NOT REQUIRED TO BE INSULATED.

WHERE LOCATED WITHIN CONDITIONED SPACE, RETURN OR EXHAUST AIR DUCTS THAT CONVEY RETURN OR EXHAUST AIR DOWNSTREAM OF AN ENERGY RECOVERY MEDIA SHALL BE INSULATED WITH A MINIMUM R-VALUE IN ACCORDANCE WITH TABLE C403.10.1.2.

ALL DUCTS, AIR HANDLERS, AND FILTER BOXES SHALL BE SEALED. JOINTS AND SEAMS SHALL COMPLY WITH SECTION 603.9 OF THE INTERNATIONAL MECHANICAL CODE.

C403.10.2 DUCTWORK SHALL BE CONSTRUCTED AND ERECTED IN ACCORDANCE WITH THE INTERNATIONAL MECHANICAL CODE.

C403.10.3 ALL PIPING SERVING AS PART OF A HEATING OR COOLING SYSTEM SHALL BE THERMALLY INSULATED IN ACCORDANCE WITH TABLE C403.10.3. EXCEPTIONS:
1. FACTORY-INSTALLED PIPING WITHIN HVAC EQUIPMENT TESTED AND RATED IN ACCORDANCE WITH A TEST PROCEDURE REFERENCED BY THIS CODE.
2. FACTORY-INSTALLED PIPING WITHIN ROOM FAN-COILS AND UNIT VENTILATORS TESTED AND RATED ACCORDING TO AHRI 440 (EXCEPT THAT THE SAMPLING AND VARIATION PROVISIONS OF SECTION 6.5 SHALL NOT APPLY) AND 840, RESPECTIVELY.
3. PIPING THAT CONVEYS FLUIDS THAT HAVE A DESIGN OPERATING TEMPERATURE RANGE BETWEEN 60°F AND 105°F.
4. PIPING THAT CONVEYS FLUIDS THAT HAVE NOT BEEN HEATED OR COOLED THROUGH THE USE OF FOSSIL FUELS OR ELECTRIC POWER.
5. STRAINERS, CONTROL VALVES, AND BALANCING VALVES ASSOCIATED WITH PIPING 1 INCH OR LESS IN DIAMETER.
6. DIRECT BURIED PIPING THAT CONVEYS FLUIDS AT OR BELOW 60°F.

C403.5 AIR ECONOMIZERS SHALL BE PROVIDED ON ALL NEW COOLING SYSTEMS INCLUDING THOSE SERVING COMPUTER SERVER ROOMS, ELECTRONIC EQUIPMENT, RADIO EQUIPMENT, AND TELEPHONE SWITCHGEAR. ECONOMIZERS SHALL COMPLY WITH SECTIONS C403.5.1 THROUGH C403.5.5. NOTE: ECONOMIZERS ARE NOT REQUIRED FOR SYSTEMS THAT MEET THE REQUIREMENTS OF SECTION C403.5, EXCEPTIONS 1 THROUGH 11.

C403.5.1 ECONOMIZER SYSTEMS SHALL BE INTEGRATED WITH THE MECHANICAL COOLING SYSTEM AND BE CONFIGURED TO PROVIDE PARTIAL COOLING EVEN WHERE ADDITIONAL MECHANICAL COOLING IS REQUIRED TO PROVIDE THE REMAINDER OF THE COOLING LOAD. CONTROLS SHALL NOT BE CAPABLE OF CREATING A FALSE LOAD IN THE MECHANICAL COOLING SYSTEM BY LIMITING OR DISABLING THE ECONOMIZER OR ANY OTHER MEANS, SUCH AS HOT GAS BYPASS, EXCEPT AT THE LOWEST STAGE OF MECHANICAL COOLING. UNITS THAT INCLUDE AN AIR ECONOMIZER SHALL COMPLY WITH THE FOLLOWING:
1. UNIT CONTROLS SHALL HAVE THE MECHANICAL COOLING CAPACITY CONTROL INTERLOCKED WITH THE AIR ECONOMIZER CONTROLS SUCH THAT THE OUTDOOR AIR DAMPER IS AT THE 100 PERCENT OPEN POSITION WHEN MECHANICAL COOLING IS ON AND THE OUTDOOR AIR DAMPER DOES NOT BEGIN TO CLOSE TO PREVENT COIL FREEZING DUE TO MINIMUM COMPRESSOR RUN TIME UNTIL THE LEAVING AIR TEMPERATURE IS LESS THAN 45°F.
2. DIRECT EXPANSION (DX) UNITS WITH COOLING CAPACITY 65,000 BTUH OR GREATER OF RATED CAPACITY SHALL COMPLY WITH THE FOLLOWING:
3. 2.1 DX UNITS THAT CONTROL THE CAPACITY OF THE MECHANICAL COOLING DIRECTLY BASED ON OCCUPIED SPACE TEMPERATURE SHALL HAVE NOT FEWER THAN TWO STAGES OF MECHANICAL COOLING CAPACITY.
4. 2.2 OTHER DX UNITS, INCLUDING THOSE THAT CONTROL SPACE TEMPERATURE BY MODULATING THE AIRFLOW TO THE SPACE, SHALL BE IN ACCORDANCE WITH TABLE C403.5.1.

C403.5.2 HVAC SYSTEM DESIGN AND ECONOMIZER CONTROLS SHALL BE SUCH THAT ECONOMIZER OPERATION DOES NOT INCREASE BUILDING HEATING ENERGY USE DURING NORMAL OPERATION. EXCEPTION: ECONOMIZERS ON VAV SYSTEMS THAT CAUSE ZONE LEVEL HEATING TO INCREASE DUE TO A REDUCTION IN SUPPLY AIR TEMPERATURE. C403.5.3.1 AIR ECONOMIZER SYSTEMS SHALL BE CONFIGURED TO MODULATE OUTDOOR AIR AND RETURN AIR DAMPERS TO PROVIDE UP TO 100 PERCENT OF THE DESIGN SUPPLY AIR QUANTITY AS OUTDOOR AIR FOR COOLING.

C403.5.3.2 ECONOMIZER CONTROLS AND DAMPERS SHALL BE CONFIGURED TO SEQUENCE THE DAMPERS WITH MECHANICAL COOLING EQUIPMENT AND SHALL NOT BE CONTROLLED BY ONLY MIXED AIR TEMPERATURE. AIR ECONOMIZERS ON SYSTEMS WITH COOLING CAPACITY GREATER THAT 65,000 BTUH SHALL BE CONFIGURED TO PROVIDE PARTIAL COOLING EVEN WHEN ADDITIONAL MECHANICAL COOLING IS REQUIRED TO MEET THE REMAINDER OF THE COOLING LOAD. EXCEPTION: THE USE OF MIXED AIR TEMPERATURE LIMIT CONTROL SHALL BE PERMITTED FOR SYSTEMS THAT ARE BOTH CONTROLLED FROM SPACE TEMPERATURE (SUCH AS SINGLE ZONE SYSTEMS) AND HAVING COOLING CAPACITY LESS THAN 65,000 BTUH.

C403.5.3.3 AIR ECONOMIZERS SHALL BE CONFIGURED TO AUTOMATICALLY REDUCE OUTDOOR AIR INTAKE TO THE DESIGN MINIMUM OUTDOOR AIR QUANTITY WHEN OUTDOOR AIR INTAKE WILL NO LONGER REDUCE COOLING ENERGY USAGE. HIGH-LIMIT SHUTOFF CONTROL TYPES SHALL BE CHOSEN FROM TABLE C403.5.3.3. HIGH-LIMIT SHUTOFF CONTROL SETTINGS FOR THESE CONTROL TYPES SHALL BE THOSE SPECIFIED TO TABLE C403.5.3.3.

C403.5.3.4 SYSTEMS SHALL BE CAPABLE OF RELIEVING EXCESS OUTDOOR AIR DURING AIR ECONOMIZER OPERATION TO PREVENT OVER-PRESSURIZING THE BUILDING. THE RELIEF AIR OUTLET SHALL BE LOCATED TO AVOID RECIRCULATION INTO THE BUILDING.

C403.5.3.5 RETURN, EXHAUST/RELIEF AND OUTDOOR AIR DAMPERS USED IN ECONOMIZERS SHALL COMPLY WITH SECTION C403.7.8.

C409.1 ALL NEW BUILDINGS AND ADDITIONS SHALL HAVE THE CAPABILITY OF METERING SOURCE ENERGY FOR ON-SITE RENEWABLE ENERGY PRODUCTION IN ACCORDANCE WITH SECTION C409.2.4 AND THE END-USE ENERGY USAGE FOR ELECTRIC VEHICLE CHARGING IN ACCORDANCE WITH SECTION C409.3.4. NEW BUILDINGS AND ADDITIONS WITH A GROSS CONDITIONED FLOOR AREA OVER 50,000 SQUARE FEET SHALL COMPLY SECTION C409. BUILDINGS SHALL BE EQUIPPED TO MEASURE, MONITOR, RECORD AND DISPLAY ENERGY CONSUMPTION DATA FOR EACH ENERGY SOURCE AND END USE CATEGORY PER THE PROVISIONS OF THIS SECTION, TO ENABLE EFFECTIVE ENERGY MANAGEMENT. EXCEPTIONS:
1. TENANT SPACES SMALLER THAN 50,000 SQUARE FEET WITHIN BUILDINGS IF TENANT SPACE HAS ITS OWN UTILITY SERVICE AND UTILITY METERS.
2. BUILDINGS IN WHICH THERE IS NO GROSS CONDITIONED FLOOR AREA OVER 25,000 SQUARE FEET, INCLUDING BUILDING COMMON AREA, THAT IS SERVED BY ITS OWN UTILITY SERVICES AND METERS.

DUCT INSULATION SCHEDULE

	SERVICE (1)(3)(4)(5)	MATERIAL (6)	R-VALUE (MIN. INSTALLED)
WSEC	SUPPLY & RETURN AIR DUCTS IN UNCONDITIONED SPACE	MINERAL-WOOL BLANKET	6.0
	SUPPLY & RETURN AIR DUCTS LOCATED OUTSIDE THE BUILDING	MINERAL-WOOL BLANKET	8.0
	SUPPLY WITH SA TEMP <55°F OR >105°F WITHIN CONDITIONED SPACE	MINERAL-WOOL BLANKET	3.3
	SUPPLY DUCTS EXPOSED WITHIN CONDITIONED SPACE	MINERAL-WOOL BLANKET	0.0
	OUTSIDE AIR FROM EXTERIOR OF BUILDING TO AUTOMATIC SHUT-OFF DAMPER OR HEATING OR COOLING EQUIPMENT AND GREATER THAN 2,800 CFM	MINERAL-WOOL BLANKET	NOTE 2
	OUTSIDE AIR FROM EXTERIOR OF BUILDING TO AUTOMATIC SHUT-OFF DAMPER OR HEATING OR COOLING EQUIPMENT AND LESS THAN 2,800 CFM	MINERAL-WOOL BLANKET	7.0
	OUTSIDE AIR DUCT IN UNHEATED EQUIPMENT ROOMS WITH COMBUSTION AIR LOUVERS, ISOLATED FROM CONDITIONED SPACE AT SIDES, TOP AND BOTTOM WITH R-11 INSULATION	MINERAL-WOOL BLANKET	0.0
WSMC	OUTSIDE AIR DUCT IN CONDITION SPACE	MINERAL-WOOL BLANKET	4.0
	FOR HEAT OR ENERGY RECOVERY VENTILATION SYSTEM, DUCT UPSTREAM OF HEAT EXCHANGER	MINERAL-WOOL BLANKET	4.0
	EXHAUST DUCTS IN UNCONDITIONED SPACE	MINERAL-WOOL BLANKET	4.0

NOTES
(1) DUCT INSULATION SHALL COMPLY WITH WSMC AND WSEC
(2) DUCT SHALL MEET THE REQUIREMENTS OF METAL FRAMED WALLS PER WSEC TABLE C402.1.4
(3) VAPOR RETARDER IS INSTALLED ON SUPPLY DUCT THAT DOES COOLING AND OUTSIDE AIR DUCT PER WSMC 604.11
(4) EXTERAL DUCT INSULATION IS IDENTIFIABLE PER WSMC 604.7
(5) ALL DUCTWORK IS CONSTRUCTED AND SEALED PER WSMC
(6) INSULATION SHALL HAVE A MAXIMUM FLAME SPREAD INDEX OF 25 AND MAXIMUM SMOKE DEVELOPED INDEX OF 50 PER WSMC 604.3

TABLE C403.10.3: MINIMUM PIPE INSULATION THICKNESS

FLUID OPERATING TEMPERATURE RANGE AND USAGE (°F)	INSULATION CONDUCTIVITY		ELECTRICAL				
	CONDUCTIVITY BTU*IN/(H*FT²*°F)	MEAN RATING TEMPERATURE, °F	< 1	1 TO < 1-1/2	1-1/2 TO < 4	4 TO < 8	≥ 8
> 350	0.32 – 0.34	250	4.5	5.0	5.0	5.0	5.0
251 – 350	0.29 – 0.32	200	3.0	4.0	4.5	4.5	4.5
201 – 250	0.27 – 0.30	150	2.5	2.5	2.5	3.0	3.0
141 – 200	0.25 – 0.29	125	1.5	1.5	2.0	2.0	2.0
105 – 140	0.21 – 0.28	100	1.0	1.0	1.5	1.5	1.5
40 – 60	0.21 – 0.27	75	0.5	0.5	1.0	1.0	1.0
< 40	0.20 – 0.26	75	0.5	1.0	1.0	1.0	1.5

City of Puyallup
Development & Permitting Services
ISSUED PERMIT
Building | Planning | Engineering | Public Works | Fire | Traffic

NO.	DATE	DESCRIPTION
1	7/9/25	PERMIT RESUBMITTAL

REVISIONS

ROBISON ENGINEERING, INC
19401 40TH AVE W., SUITE 302
LYNNWOOD, WA 98036
206-364-3343 TEL

JACOB J. O'BRIEN
STATE OF WASHINGTON
23001780
REGISTERED PROFESSIONAL ENGINEER
06/25/2025

DRAWN: OP
DESIGNED: ABE
CHECKED: PR
APPROVED: JMR

PROJECT: 810-010 East Town Crossing Mechanical
MULTIFAMILY DEVELOPMENT
PIONEER WAY & SHAW RD. PUYALLUP, WA

ROBISON ENGINEERING, INC
19401 40TH AVE W. SUITE 302
LYNNWOOD, WA 98036
PHONE:(206)364-3343
REI PROJECT NO.: 810-010
CONTACT: ARIK ESPINELI

DATE: 07/09/2025

SHEET TITLE: PROJECT NOTES

SHEET NO. M0.1

CALCULATIONS

PRCNC20250692

PUBLIC SPACES OUTSIDE AIR VENTILATION CALCULATIONS (1)									
ROOM NUMBER	ROOM NAME	ROOM SQUARE FOOTAGE	ROOM OCCUPANTS	MINIMUM CFM PER SQUARE FOOT	MINIMUM CFM PER PERSON	MINIMUM REQUIRED CFM BY AREA	MINIMUM REQUIRED CFM BY PERSON	TOTAL REQUIRED OSA CFM (AREA + PEOPLE)	TOTAL OSA CFM PROVIDED
102	EXERCISE	640	7	0.06	20	38	140	178	200
103	GATHERING	351	18	0.06	5	21	90	111	125
106	GATHERING	1160	42	0.06	5	70	210	280	300
109	LEASING	82	2	0.06	5	5	10	15	25

NOTES: (1) VENTILATION RATES ARE PER THE 2021 IMC, TABLE 403.4.2.

1

NO.	DATE	DESCRIPTION
1	7/9/25	PERMIT RESUBMITTAL

REVISIONS

ROBISON ENGINEERING, INC
19401 40TH AVE W, SUITE 302
LYNNWOOD, WA 98036
206-364-3343 tel.

JACOB J. OBRIEN
STATE OF WASHINGTON
REGISTERED PROFESSIONAL ENGINEER
06/23/2025

DRAWN: OP
DESIGNED: ABE
CHECKED: PR
APPROVED: JMR

PROJECT: 810-010 East Town Crossing Mechanical
MULTIFAMILY DEVELOPMENT
PIONEER WAY & SHAW RD. PUYALLUP, WA

ROBISON ENGINEERING, INC
19401 40TH AVE W, SUITE 302
LYNNWOOD, WA 98036
PHONE:(206)364-3343
REI PROJECT NO.: 810-010
CONTACT: ARIK ESPINELI

DATE: 07/09/2025

SHEET TITLE: TABLES & CALCULATIONS

SHEET NO. M0.2

City of Puyallup
Development & Permitting Services
ISSUED PERMIT
Building | Planning
Engineering | Public Works
Fire | Traffic

SCHEDULES

PRCNC20250692

DIFFUSER SCHEDULE

CALLOUT	DESCRIPTION	AIRFLOW RANGE, CFM	FACE SIZE, IN	BASIS OF DESIGN
CD-2	SUPPLY CEILING DIFFUSER	0-350	12X12	TITUS MCD
CD-3	SUPPLY CEILING DIFFUSER	0-350	18X18	TITUS MCD
SG-1	SUPPLY SIDEWALL GRILLE	0-150	10X4	SHOEMAKER 950
SG-3	SUPPLY SIDEWALL GRILLE	0-350	12X8	TITUS 300RL
SRG-1	RETURN SIDEWALL GRILLE	0-1200	24x12	TITUS 350ZRL
SRG-2	RETURN SIDEWALL GRILLE	0-2250	24x24	TITUS 350ZRL
EG-1	EXHAUST CEILING GRILLE	0-170	6x6	TITUS 350ZRL
EG-2	EXHAUST CEILING GRILLE	0-800	12x12	TITUS 350ZRL

1

SPLIT SYSTEM HEAT PUMP SCHEDULE - INDOOR UNIT

EQUIP NO.	SERVICE	MOUNTING/ DISCHARGE	FAN		ELECTRICAL			BASIS OF DESIGN (1)(3)	CONNECTED OUTDOOR UNIT
			AIRFLOW, CFM	ESP, IN WG	VOLTAGE	MCA	MOCP		
FCU-1	EXERCISE 102 & GATHERING 103	MULTI-POSITION AIR HANDLER	1400	0.9	208V/1P	6.5	15	DAIKIN FTQ42TAVJUD (4)	HP-1
FCU-2	RESTROOMS & GATHERING 106	MULTI-POSITION AIR HANDLER	1520	0.9	208V/1P	6.5	15	DAIKIN FTQ48TAVJUD (4)	HP-2
FCU-3	LEASING 109	WALL CASSETTE	431	-	208V/1P	(2)	(2)	DAIKIN FTX09AXVJU	HP-3
FCU-4	MANAGER APARTMENT	WALL CASSETTE	716	-	208V/1P	(2)	(2)	DAIKIN FTX18AXVJU	HP-4
FCU-5	BEDROOM SUITE	WALL CASSETTE	431	-	208V/1P	(2)	(2)	DAIKIN FTX09AXVJU	HP-3

NOTES:
(1) INSTALL IN ACCORDANCE WITH MANUFACTURER'S INSTALLATION REQUIREMENTS.
(2) INDOOR UNIT POWERED FROM OUTDOOR UNIT.
(3) PROVIDE HVAC PROGRAMMABLE CONTROL. BOD: DAIKIN BRC1E73 CONTROL
(4) CONTROL INTERLOCK TO DOOR SWITCH WHERE HVAC SYSTEM SHALL BE DISABLE WHEN DOOR IS OPEN FOR MORE THAN 5 MINS.
(5) MITSUBISHI, LG, AND CARRIER APPROVED ALTERNATES.

SPLIT SYSTEM HEAT PUMP SCHEDULE - OUTDOOR UNIT

EQUIP NO.	SERVICE	CAPACITY, TONS	TOTAL COOLING CAPACITY, BTUH	SEER2	TOTAL HEATING CAPACITY, BTUH	HSPF2	ELECTRICAL			WEIGHT, LBS	BASIS OF DESIGN (1)(2)(3)(4)(5)	CONNECTED FAN COIL UNIT
							VOLTAGE	MCA	MOCP			
HP-1	EXERCISE 102 & GATHERING 103	3.5	42,000	16	47,000	8.8	208V/1P	29.1	35	225	DAIKIN RZQ42TAVJUA	FCU-1
HP-2	RESTROOMS & GATHERING 106	4.0	48,000	14.8	54,000	8.8	208V/1P	29.1	35	225	DAIKIN RZQ48TAVJUA	FCU-2
HP-3	LEASING 109	0.75	8,900	19	10,000	10	208V/1P	8.7	15	57	DAIKIN RX09AXVJU	FCU-3
HP-4	MANAGER APARTMENT	1.5	18,000	18.5	21,600	9.0	208V/1P	16.4	20	101	DAIKIN RX18AXVJU	FCU-4
HP-5	BEDROOM SUITE	0.75	8,900	19	10,000	10	208V/1P	8.7	15	57	DAIKIN RX09AXVJU	FCU-5

NOTES:
(1) INSTALL IN ACCORDANCE WITH MANUFACTURER'S INSTALLATION REQUIREMENTS.
(2) ARI LISTED WITH ALL STANDARD FEATURES, INSTALLATION ACCESSORIES AND COMPRESSOR SHORT CYCLING PROTECTION. FILTER DRIVER, REFRIGERANT LINE FILTER, LIQUID SOLENOID VALVE, AND SAFETY PRESSURE SWITCHES. INSTALL REFRIGERANT TUBING AND LENGTH IN STRICT ACCORDANCE WITH MANUFACTURER'S RECOMMENDATIONS.
(3) NOT USED.
(4) ROUTING OF REFRIGERANT LINES FROM INDOOR TO OUTDOOR UNITS NOT SHOWN ON PLANS. CONTRACTOR TO FIELD COORDINATE ROUTING.
(5) REFRIGERANT SHALL BE R-410A.
(6) MITSUBISHI, LG, AND CARRIER APPROVED ALTERNATES.

ENERGY RECOVERY VENTILATOR

EQUIP NO.	SERVICE	MOUNTING/ DISCHARGE	FAN		ELECTRICAL			SENSIBLE HEAT RECOVERY EFFICIENCY	BASIS OF DESIGN (1)(2)(3)
			AIRFLOW, CFM	ESP, IN WG	VOLTAGE	MCA (WATTS)	MOCP		
ERV-1	EXERCISE 102 & GATHERING 103	HORIZONTAL	325	0.86	208V/1P	3.9	15	0.61	MITSUBISHI TLGHF0380RVX02A
ERV-2	RESTROOMS & GATHERING 106	HORIZONTAL	300	0.86	208V/1P	3.9	15	0.61	MITSUBISHI TLGHF0380RVX02A
ERV-3	LEASING 109	HORIZONTAL	50	0.1	120V/1P	(39)	15	0.70	PANASONIC FV-06VE1
ERV-4	MANAGER APARTMENT	HORIZONTAL	40	0.4	120V/1P	2.4	15	0.84	BROAN BLP150E75NS-HW

NOTES:
(1) INSTALL IN ACCORDANCE WITH MANUFACTURER'S INSTALLATION REQUIREMENTS.
(2) UNIT SHALL RUN CONTINUOUSLY.
(3) UNIT SHALL HAVE A MINIMUM MERV 8 FILTER.
(4) PROVIDE MANUFACTURER'S OPTIONAL WALL MOUNT SPEED CONTROLLER, PART NUMBER 611229. SPEED CONTROLLER SHALL BE MOUNTED NEXT TO THE LIGHT SWITCH FOR THE BATHROOM.
(5) MULTIPLE UNITS ARE IDENTIFIED WITH A LETTER SUFFIX (ERV-3A, ERV-3B, ETC.). THERE MAY BE GAPS IN THE SEQUENCE. REFER TO FLOOR PLANS FOR QUANTITIES.
(6) "X" REFERS TO THE FLOOR NUMBER.

FAN SCHEDULE

EQUIP NO.	SERVICE	TYPE	AIRFLOW, CFM	ESP, IN WG	ELECTRICAL		OPERATION	WEIGHT, LBS	BASIS OF DESIGN (1)
					VOLTAGE	HP			
BEF-1	BATHROOM	CEILING MOUNTED	50	0.25	115V/1P	FHP	(2)	10	PANASONIC FV-0511VQ1 (3)

NOTES:
(1) PROVIDE BACKDRAFT DAMPERS ON EXHAUST FANS.
(2) FAN SHALL BE ACTIVATED VIA WALL SWITCH.
(3) PROVIDE MANUFACTURER'S OPTIONAL CEILING RADIATION DAMPER.

City of Puyallup
Development & Permitting Services
ISSUED PERMIT
Building | Planning
Engineering | Public Works
Fire | Traffic

REVISIONS

NO.	DATE	DESCRIPTION
1	7/9/25	PERMIT RESUBMITTAL

ROBISON ENGINEERING, INC
19401 40TH AVE W., SUITE 302
LYNNWOOD, WA 98036
206-364-3343 ttl.

JACOB J. OBERLIN
STATE OF WASHINGTON
23018
REGISTERED
PROFESSIONAL ENGINEER
06/23/2025

DRAWN: OP
DESIGNED: ABE
CHECKED: PR
APPROVED: JMR

PROJECT
810-010 East Town Crossing Mechanical
MULTIFAMILY DEVELOPMENT
PIONEER WAY & SHAW RD. PUYALLUP, WA

ROBISON ENGINEERING, INC
19401 40TH AVE W, SUITE 302
LYNNWOOD, WA 98036
PHONE:(206)364-3343
REI PROJECT NO.: 810-010
CONTACT: ARIK ESPINELI

DATE:
07/09/2025

SHEET TITLE:
MECHANICAL SCHEDULES

SHEET NO.
M0.3

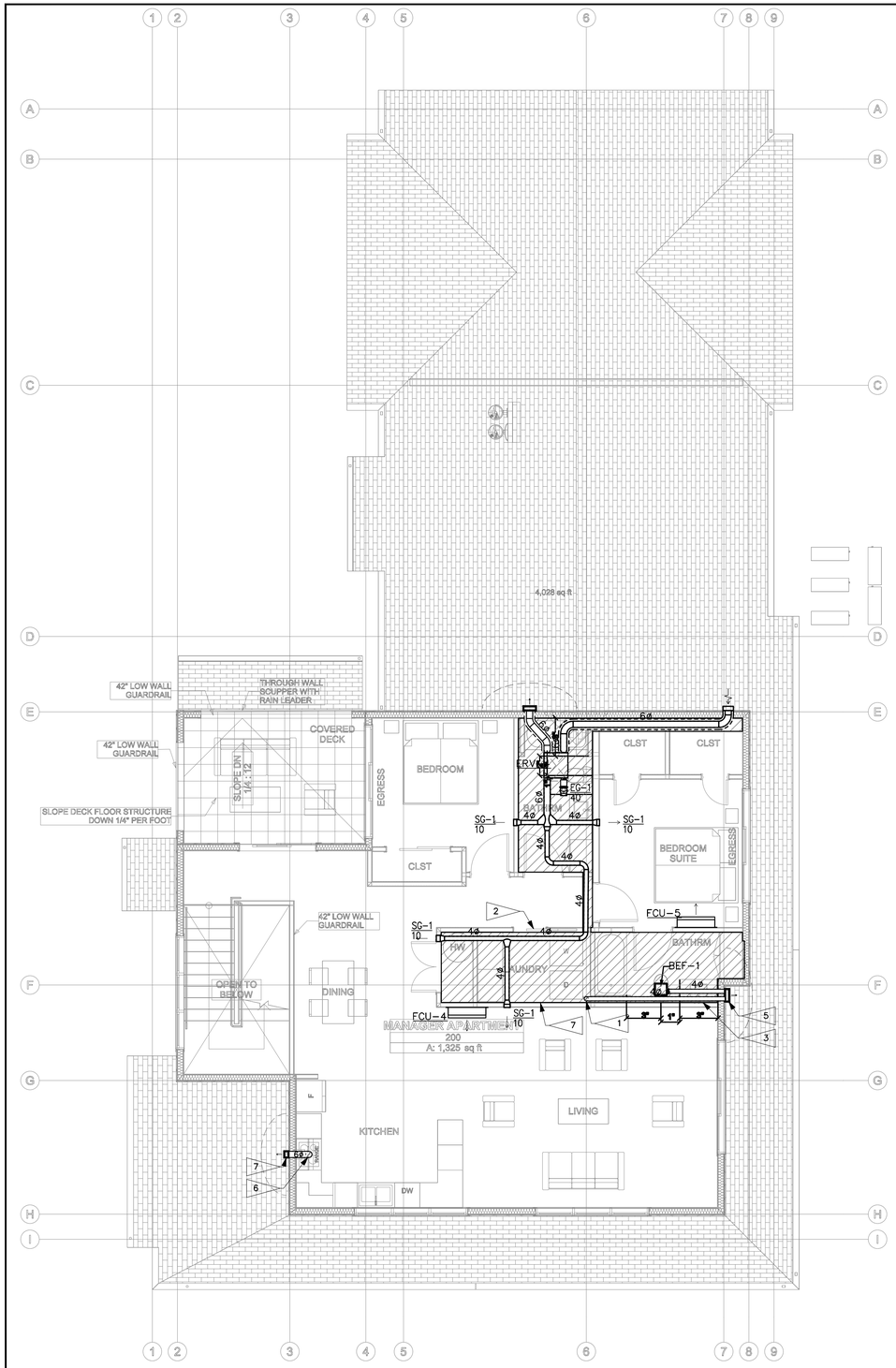

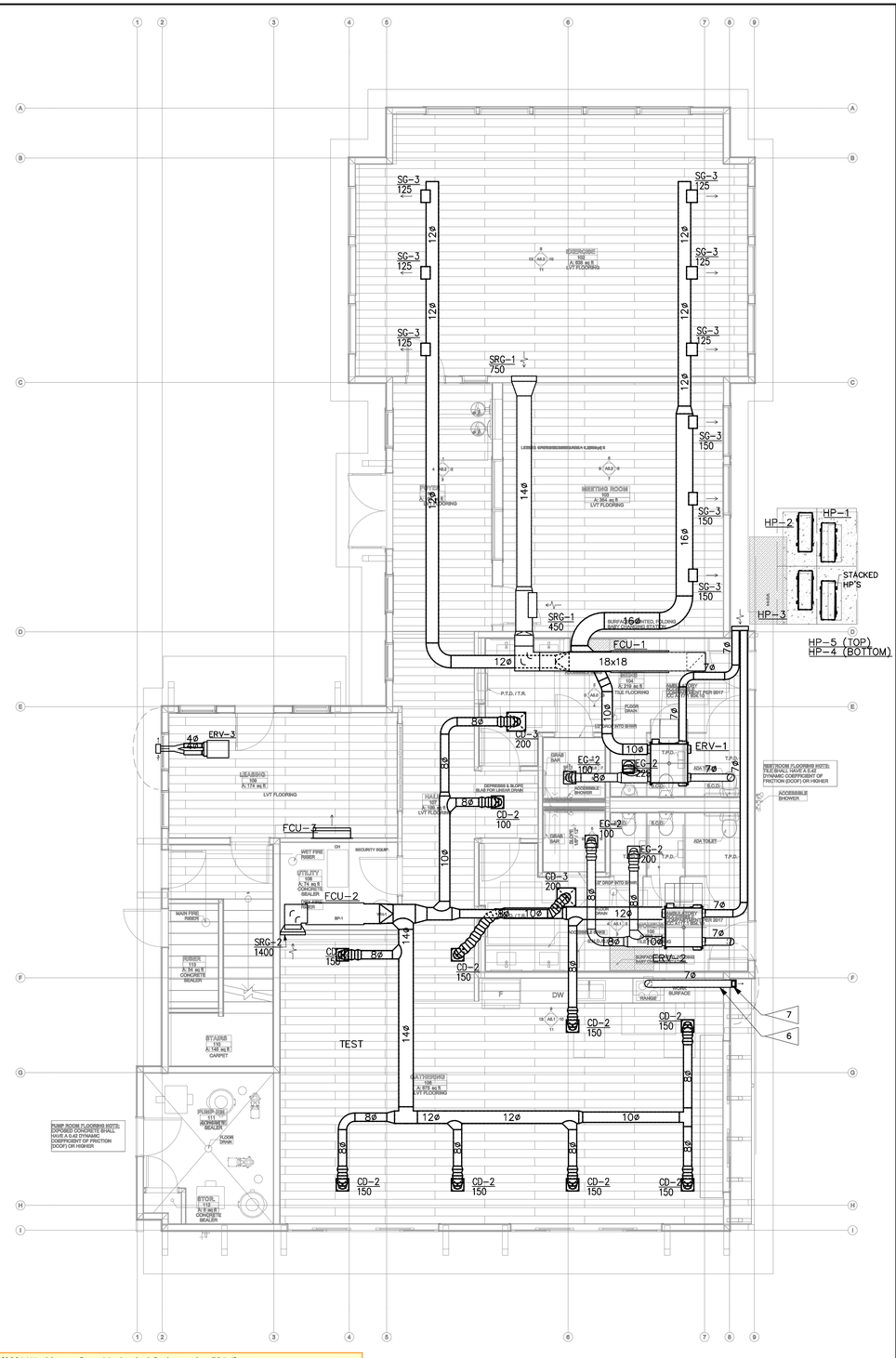

[2021 Washington State Mechanical Code, section 504.2]
Exhaust Penetrations
Where a clothes dryer exhaust duct penetrates a wall or ceiling membrane, the annular space shall be sealed with noncombustible material, approved fire caulking or a noncombustible dryer exhaust duct wall receptacle. Ducts that exhaust clothes dryers shall not penetrate or be located within any fireblocking, draftstopping or any wall, floor/ceiling or other assembly required by the International Building Code to be fire-resistance rated, unless such duct is constructed of galvanized steel or aluminum of the thickness specified in Section 603.4 and the fire-resistance rating is maintained in accordance with the International Building Code. Fire dampers, combination fire/smoke dampers and any similar devices that will obstruct the exhaust flow shall be prohibited in clothes dryer exhaust ducts.

[2021 Washington State Mechanical Code, section 504.4]
Exhaust Installation
Dryer exhaust ducts for clothes dryers shall terminate on the outside of the building and shall be equipped with a backdraft damper located where the duct terminates. Dryer exhaust ducts may terminate at exterior wall louvers with openings spaced not less than 1/2-inch in any direction.

Screens shall not be installed at the duct termination. Ducts shall not be connected or installed with sheet metal screws or other fasteners that will obstruct the exhaust flow. Clothes dryer exhaust ducts shall not be connected to a vent connector, vent or chimney. Clothes dryer exhaust ducts shall not extend into or through ducts or plenums.

Domestic dryer exhaust ducts may terminate at a common location where each duct has an independent backdraft damper.

RESIDENTIAL UNIT NOTES:

PRCNC20250692

1. PENETRATIONS OF THE RATED WALL ASSEMBLIES SHALL BE PROTECTED IN ACCORDANCE WITH IBC SECTION 717. REFER TO ARCHITECTURAL PLANS FOR PENETRATION DETAILS.
2. PER OWNER, THE FOLLOWING RANGE HOODS ARE BEING INSTALLED: STANDARD UNITS (MICRO/HOOD COMBO): FRIGIDAIRE LFMV1846VF ADA UNITS (HOOD ONLY): GE JVX3240DJWW PER THE MANUFACTURER'S INSTALLATION INSTRUCTIONS, DUCT CONNECTION TO HOODS ARE 6ø. MINIMUM SIZE ROUND DUCT FOR HOOD VENTING SHALL BE 7".
3. ENERGY RECOVERY VENTILATOR ERV-1 SHALL SERVE AS THE WHOLE HOUSE VENTILATION FAN. REFER TO M0.2 FOR REQUIREMENTS.
4. DRYER VENTING: PER THE MANUFACTURER'S INSTALLATION INSTRUCTIONS, THE MAXIMUM LENGTH OF THE DRYER VENTS IS AS FOLLOWS (REFER TO DWG M4.0, DETAIL 1):

STANDARD DRYER: GE GUV27ESSM	
NUMBER OF 90° ELBOWS OR TURNS	MAXIMUM LENGTH (FT)
0	200
1	185
2	175
3	165
4	155
5	145

FLAG NOTES:

1. 4ø POC TO DRYER. PROVIDE METAL DRYER BOX WHERE DUCT IS ROUTED IN 2X6 FRAMED WALL. REFER TO MANUFACTURER'S INSTALLATION INSTRUCTIONS AND WSMC 504.8.4.1 FOR THE MAXIMUM ALLOWED LENGTH OF THE DRYER VENT. PROVIDE PERMANENT PLACARD OF TYPE PLAC34 SHOWING NET EQUIVALENT LENGTH. DUCT SHALL REMAIN SEPARATE FROM OTHER EXHAUST SYSTEMS UP TO TERMINATION.
2. CLOSETS CONTAINING DRYERS SHALL BE PROVIDED WITH LOUVERED DOOR OR 100 SQ. IN FREE-AREA OPENING ABOVE DOOR. OPENING PROVIDES PATH FOR EXHAUST AIR DURING WASHER OPERATION PER WSMC TABLE 403.3.1.1 NOTE (I) AND MAKEUP AIR DURING DRYER OPERATION PER 504.6.
3. DRYER EXHAUST VENT SHALL BE PROTECTED WITH FIRE WRAP FROM DRYER TO EXTERIOR WALL TERMINATION POINT. REFER TO DWG M401, DETAIL 1 FOR FIRE WRAP DETAILS. FIRE WRAP SHALL BE UNIFRAX FYREWRAP DPS.
4. NOT USED
5. 4" DRYER EXHAUST TERMINATION WALL CAP. PROVIDE BACKDRAFT DAMPER AT TERMINATION. DO NOT INSTALL SCREENS ON DRYER EXHAUST TERMINATIONS. CLEARANCES PER GENERAL NOTE 1.
6. POC TO DOMESTIC KITCHEN RANGE HOOD. RANGE HOOD SHALL PROVIDE MINIMUM 250 CFM OF INTERMITTENT EXHAUST. SEE PLANS FOR SIZE. DUCT SHALL REMAIN SEPARATE FROM OTHER EXHAUST SYSTEMS UP TO TERMINATION.
7. DOMESTIC KITCHEN RANGE HOOD EXHAUST TERMINATION WALL CAP WITH SCREEN. PROVIDE BACKDRAFT DAMPER AT TERMINATION. CLEARANCES PER GENERAL NOTE 1.
8. LOWERED SOFFIT FOR MECHANICAL EQUIPMENT.

1

NO.	DATE	DESCRIPTION
1	7/9/25	PERMIT RESUBMITTAL

REVISIONS

ROBISON ENGINEERING, INC
19401 40TH AVE W, SUITE 302
LYNNWOOD, WA 98036
206-364-3343 ttn.

JACOB J. OBERLIN — STATE OF WASHINGTON — 23181 — REGISTERED PROFESSIONAL ENGINEER — 09/23/2025

DRAWN: OP | DESIGNED: ABE | CHECKED: PR | APPROVED: JMR

PROJECT: EAST TOWN CROSSING CLUBHOUSE
MULTIFAMILY DEVELOPMENT
PIONEER WAY & SHAW RD. PUYALLUP, WA

ROBISON ENGINEERING, INC
19401 40TH AVE W, SUITE 302
LYNNWOOD, WA 98036
PHONE:(206)364-3343
REI PROJECT NO.: 8100.10
CONTACT: ARIK ESPINELI

DATE: 07/09/2025

SHEET TITLE: HVAC PLAN - LEVEL 1 & LEVEL 2

SHEET NO. **M2.0**

City of Puyallup
Development & Permitting Services
ISSUED PERMIT

Building	Planning
Engineering	Public Works
Fire	Traffic

COPYRIGHT 2025, ROBISON ENGINEERING, INC.
AESPINELI F:\810 SYNTHESIS 9\810-010 EAST TOWN CROSSING\DWG\M200 - HVAC CLUBHOUSE.DWG 07-09-2025 12:37

PRCNC20250692

ADA DRYER

GFV55ESSN

GE® Long Vent 7.8 cu. ft. Capacity Front Load Electric Dryer

DIMENSIONS AND INSTALLATION INFORMATION (IN INCHES)

ELECTRIC DRYER RATING	
120V/240V	5600W, 25A, 60Hz
120V/208V	4300W, 23A, 60Hz

EXHAUST OPTIONS: 4-way via rear, right, left and bottom.

CIRCUIT REQUIREMENTS: An individual, properly grounded branch circuit, protected by a 30-amp circuit breaker or a time-delay fuse, is required.

NOTE: Dryer wall outlet must be located within 36" of service cord entry and accessible when dryer is mounted in position.

INSTALLATION INFORMATION: For complete information, see installation instructions packed with your dryer.

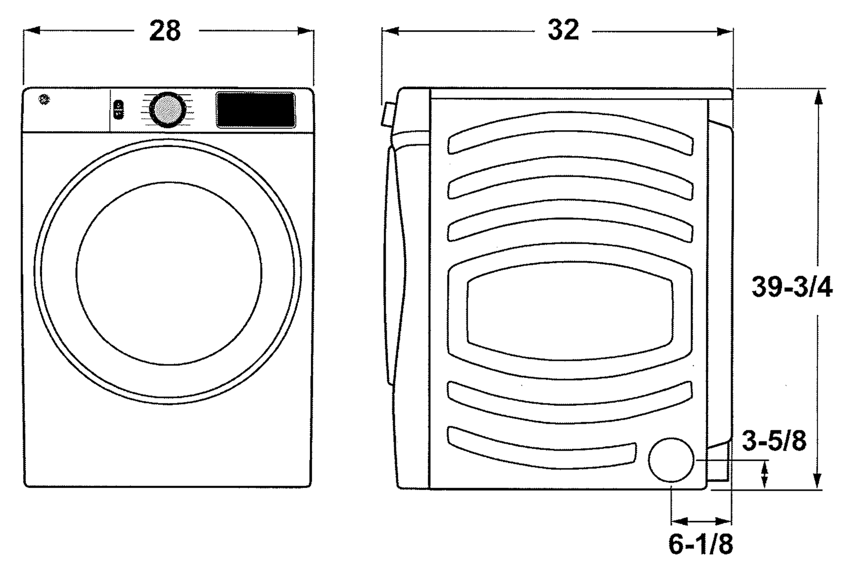

GE APPLIANCES

For answers to your Monogram, GE Café™ Series, GE Profile™ Series or GE Appliances product questions, visit our website at geappliances.com or call GE Answer Center® Service, 800.626.2000.

Listed by Underwriters Laboratories

Specification Revised 11/19

GFV55ESSN

GE® Long Vent 7.8 cu. ft. Capacity Front Load Electric Dryer

DRYER EXHAUSTING INFORMATION –METAL DUCT ONLY

For complete information, see installation instructions packed with your dryer.

DUCTING MATERIALS: For best performance, this dryer should be vented with 4" diameter all rigid metal exhaust duct. If rigid metal duct cannot be used, then UL-listed flexible metal (semi-rigid) ducting can be used (Kit WX08X10077). In special installations, it may be necessary to connect the dryer to the house vent using a flexible metal (foil-type) duct. A UL-listed flexible metal (foil-type) duct may be used ONLY in installations where rigid metal or flexible metal (semi-rigid) ducting cannot be used AND where a 4" diameter can be maintained throughout the entire length of the transition duct. Please see installation instruction packed with your dryer for complete instructions when using flexible metal (foil type) ducting.

EXHAUST LENGTH CALCULATION:

1. Determine the number of 90° turns needed for your installation. If you exhaust to the side or bottom of dryer, add one turn.
2. The maximum length of 4" rigid (aluminum or galvanized) duct which can be tolerated is shown in the table.

   A turn of 45° or less may be ignored. Two 45° turns within the duct length should be treated as a 90° elbow.

   A turn over 45° should be treated as a 90° elbow.

Dryers must be exhausted to the outside.

CAUTION: For personal safety do not terminate exhaust into a chimney, under any enclosed house floor (crawl space), or into an attic, since the accumulated lint could create a fire hazard or moisture could cause damage. Never terminate the exhaust into a common duct or plenum with a kitchen exhaust, since the combination of lint and grease could create a fire hazard.

Exhaust ducts should be terminated in a dampered wall cap to prevent back drafts, bird nesting, etc. The wall cap must also be located at least 12" above the ground or any other obstruction with the opening pointed down.

FOR MORE INFORMATION ON VENTING KITS AND ACCESSORIES, PLEASE CALL 1-800-GE-CARES.

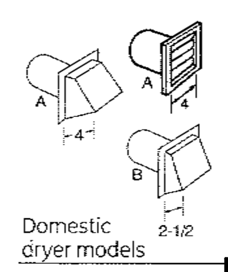

	Best performance	
	Maximum length of 4" dia. **rigid metal** duct	
	Exhaust hood type	
Number of 90° turns	A 4" opening	B 2-1/2" opening
0	200 ft.	175 ft.
1	185 ft.	165 ft.
2	175 ft.	155 ft.
3	165 ft.	145 ft.
4	155 ft.	135 ft.

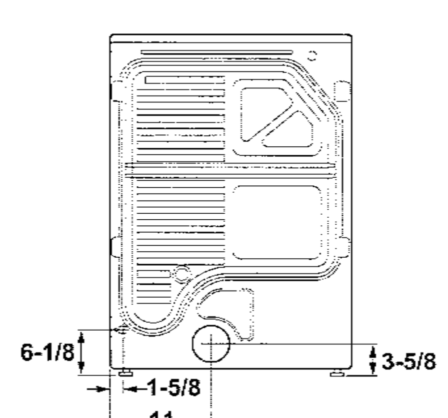

GE APPLIANCES

For answers to your Monogram, GE Café™ Series, GE Profile™ Series or GE Appliances product questions, visit our website at geappliances.com or call GE Answer Center® Service, 800.626.2000.

Listed by Underwriters Laboratories

Specification Revised 11/19

STANDARD DRYER

GUV27ESSM

GE® Unitized Spacemaker® 3.8 DOE Cu. Ft. Stainless Steel Washer and 5.9 Cu. Ft. Long Vent Electric Dryer

DIMENSIONS AND INSTALLATION INFORMATION (IN INCHES)

ELECTRICAL REQUIREMENTS: This appliance should be connected to an individual, properly-grounded branch circuit with 120/240V or 120/208V single-phase 60 Hz electrical service and should be protected by 30-amp time-delay fuses or circuit breakers KW Rating per voltage (240/208). This appliance is manufactured with neutral connected to the frame. Power cord should be purchased separately.

Dryers must be exhausted to the outside.

INSTALLATION INFORMATION: For complete information, see installation instructions packed with the product.

Installation Instructions

27" NOMINAL PRODUCT DIMENSIONS

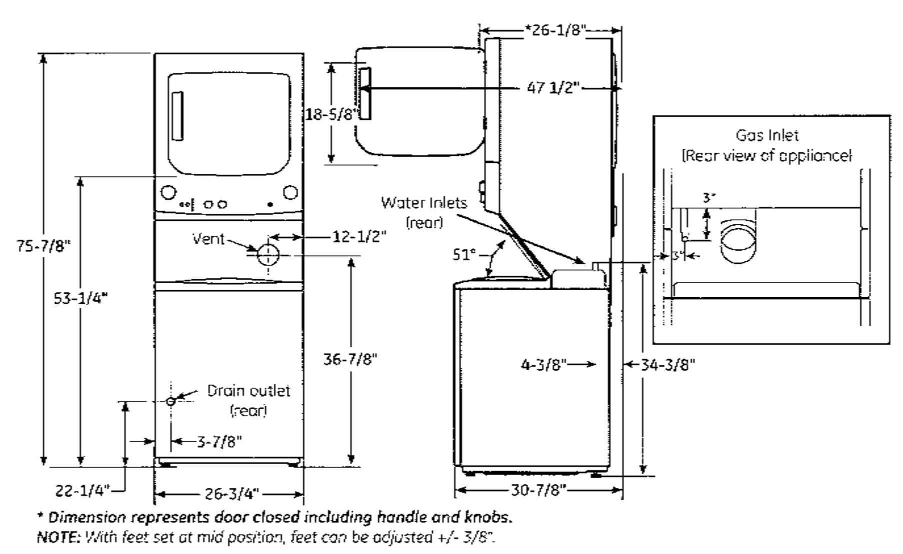

** Dimension represents door closed including handle and knobs.*
NOTE: With feet set at mid position, feet can be adjusted +/- 3/8".

GE APPLIANCES

For answers to your Monogram, GE Café™ Series, GE Profile™ Series or GE Appliances product questions, visit our website at geappliances.com or call GE Answer Center® Service, 800.626.2000.

Listed by Underwriters Laboratories

Specification Revised 11/17

GUV27ESSM

GE® Unitized Spacemaker® 3.8 DOE Cu. Ft. Stainless Steel Washer and 5.9 Cu. Ft. Long Vent Electric Dryer

DIMENSIONS AND INSTALLATION INFORMATION (IN INCHES)

For complete information, see installation instructions packed with your dryer.

DUCTING MATERIALS:
For best performance, this dryer should be vented with 4" diameter all rigid metal exhaust duct. If rigid metal duct cannot be used, then UL-listed flexible metal (semi-rigid) ducting can be used (Kit WX08X10077). In special installations, it may be necessary to connect the dryer to the house vent using a flexible metal (foil-type) duct. A UL-listed flexible metal (foil-type) duct may be used ONLY in installations where rigid metal or flexible metal (semi-rigid) ducting cannot be used AND where a 4" diameter can be maintained throughout the entire length of the transition duct. Please see installation instruction packed with your dryer for complete instructions when using flexible metal (foil type) ducting.

EXHAUST LENGTH CALCULATION:

1. Determine the number of 90° turns needed for your installation. If you exhaust to the side or bottom of dryer, add one turn.
2. The maximum length of 4" rigid (aluminum or galvanized) duct which can be tolerated is shown in the table.

For every extra 90° elbow, reduce the allowable vent system length by 10 ft. Two 45° elbows will be treated like one 90° elbow. For the side exhaust installations, add one 90° elbow to the chart. The total vent system length includes all the straight portions and elbows of the system (transition duct included)..

Dryers must be exhausted to the outside.

CAUTION: For personal safety do not terminate exhaust into a chimney, under any enclosed house floor (crawl space), or into an attic, since the accumulated lint could create a fire hazard or moisture could cause damage. Never terminate the exhaust into a common duct or plenum with a kitchen exhaust, since the combination of lint and grease could create a fire hazard.

Exhaust ducts should be terminated in a dampered wall cap to prevent back drafts, bird nesting, etc. The wall cap must also be located at least 12" above the ground or any other obstruction with the opening pointed down.

GUV27 DRYER EXHAUST LENGTH

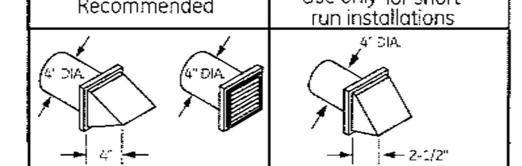

	RECOMMENDED MAXIMUM LENGTH	
	Exhaust Hood Types	
	Recommended	Use only for short run installations
No. of 90° Elbows	Rigid Metal	Rigid Metal
0	200 Feet	175 Feet
1	185 Feet	165 Feet
2	175 Feet	155 Feet
3	165 Feet	145 Feet
4	155 Feet	135 Feet
5	145 Feet	125 Feet

GE APPLIANCES

For answers to your Monogram, GE Café™ Series, GE Profile™ Series or GE Appliances product questions, visit our website at geappliances.com or call GE Answer Center® Service, 800.626.2000.

Listed by Underwriters Laboratories

Specification Revised 11/17

SAMPLE LABEL

NOTE:

DRYER MAKE AND MODEL SHOWN ARE THE BASIS OF DESIGN FOR DETERMINING MAXIMUM DRYER VENT LENGTHS. IF A DIFFERENT MAKE/MODEL IS USED, NOTIFY THE ENGINEER AND ARCHITECT IMMEDIATELY TO VERIFY VENT LENGTHS AND TO DETERMINE IF DRYER BOOSTER FANS WILL BE NECESSARY.

PER IMC 504.8.5, CONTRACTOR SHALL PROVIDE A LABEL OR PLACARD WITHIN 6 FEET OF THE EXHAUST DUCT CONNECTION THAT LISTS THE EQUIVALENT LENGTH OF THE DRYER EXHAUST DUCT. SEE SAMPLE LABEL FOR DETAILS.

BASIS OF DESIGN FOR DRYER VENTING

DETAIL

SCALE: NONE

1
M4.0

City of Puyallup
Development & Permitting Services
ISSUED PERMIT
Building | Planning | Engineering | Public Works | Fire | Traffic

NO.	DATE	DESCRIPTION
1	7/9/25	PERMIT RESUBMITTAL

REVISIONS

ROBISON ENGINEERING, INC
19401 40TH AVE W., SUITE 302
LYNNWOOD, WA 98036
206-364-3343 TEL

JACOB J. O'BRIEN
STATE OF WASHINGTON
23001780
REGISTERED PROFESSIONAL ENGINEER
06/25/2025

DRAWN: OP
DESIGNED: ABE
CHECKED: PR
APPROVED: JMR

PROJECT: EAST TOWN CROSSING CLUBHOUSE
MULTIFAMILY DEVELOPMENT
PIONEER WAY & SHAW RD. PUYALLUP, WA

ROBISON ENGINEERING, INC
19401 40TH AVE W. SUITE 302
LYNNWOOD, WA 98036
PHONE:(206)364-3343
REI PROJECT NO.: 810-010
CONTACT: ARIK ESPINELI

DATE:
07/09/2025

SHEET TITLE:
DETAILS & DIAGRAMS

SHEET NO.
M4.0

COPYRIGHT 2021, ROBISON ENGINEERING, INC.
MNELSON F:\810-010 EAST TOWN CROSSING\DWG\M000 COVER SHEET.DWG 01-02-2021 13:59

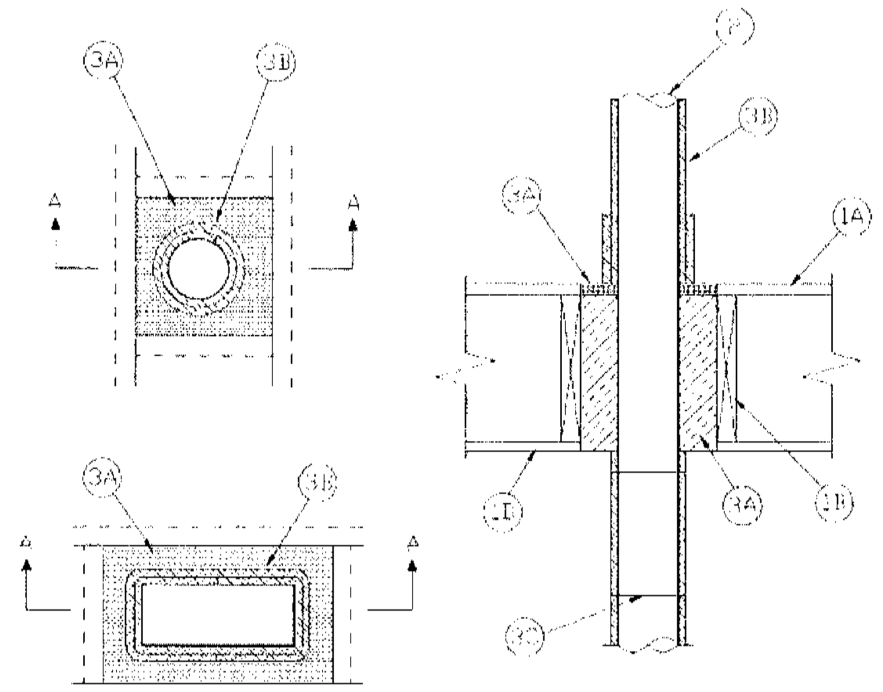

SECTION A-A

1. **Floor-Ceiling Assembly —** The 1 hr fire-rated solid or trussed lumber joist floor-ceiling assembly shall be constructed of the materials and in the manner specified in the individual L500 Series Floor-Ceiling Designs in the UL Fire Resistance Directory. The general construction details of the floor-ceiling assembly are summarized below:

A. **Flooring System —** Lumber or plywood subfloor with finish floor of lumber, plywood or **Floor Topping Mixture*** as specified in the individual Floor-Ceiling Design. Max area of floor opening is 150 in.2 (0.098 m^2) with a max 1.5 in. (38 mm) annular space between wrapped duct and framing members.

B. **Wood Joists —** Nom 10 in. (254 mm) deep (or deeper) lumber, steel or combination lumber and steel joists, trusses or **Structural Wood Members*** with bridging as required and with ends firestopped. Additional framing members installed to form a square enclosure around the perimeter of the opening in the floor and ceiling.

C. **Furring Channels —** (Where required - not shown) - Resilient galv steel furring installed perpendicular to wood joists between gypsum board and wood joists as specified in the individual Floor-Ceiling Design. Furring channels spaced max 24 in. (610 mm) OC. If furring channels are used within the assembly, additional furring channels to be installed around the periphery of the opening.

D. **Gypsum Board* —** Nom 4 ft (1.2 m) wide by 5/8 in. (15.9 mm) thick as specified in the individual Floor-Ceiling Design. Gypsum board secured to wood joists or furring channels as specified in the individual Floor-Ceiling Design. Max area of ceiling opening is 150 in.2 (0.098 m^2) with a max 1.5 in. (38 mm) annular space between duct and framing members.

2. **Steel Air Duct —** Max 7 in. (178 mm) diam by min 0.0157 in. (No. 30 gauge or 0.40 mm) thick galv steel air duct to be centered within the firestop system. Max one steel air duct to be installed within opening. Steel duct to be rigidly supported on top side of floor-ceiling assembly.

2A. **Steel Air Duct —** Max 10 x 4 in. (254 x 102 mm) rectangular by min 0.022 in (no. 26 gauge or 0.56 mm) thick galv steel air duct to be centered within the firestop system. Max one steel air duct to be installed within opening. Steel duct to be rigidly supported on top side of floor-ceiling assembly.

3. **Fire-resistive System —** The fire resistive system shall consist of the following:

A. **Firestop System —** When the ventilation duct passes through a fire rated floor assembly, the through openings shall be firestopped in accordance with System No. F-C-7057.

B. **Batts and Blankets* —** 1/2 in. (13 mm) thick, 8 pcf (128 kg/m^3) or nom 1-1/2 in. (38 mm) thick, 6 pcf (96 kg/m^3) with foil-scrim facers. The steel duct shall be wrapped with one layer of duct wrap installed with 1 in. (25 mm) transverse and longitudinal overlaps or tightly butted compression joints in accordance with the manufacturer's installation instructions A min 12 in. high collar consisting of an additional layer of 1/2 in. (13 mm) thick, 8 pcf (128 kg/m^3) or nom 1-1/2 in. (38 mm) thick, 6 pcf (96 kg/m^3) duct wrap, installed over the duct wrap flush with the top surface of the floor and extending upward. All seams and edges shall be sealed with min 3 in. (76 mm) wide pressure sensitive aluminum foil tape.

UNIFRAX I L L C — FyreWrap® DPS or FyreWrap® Elite 1.5

C. **Steel Tie Wire —** Min No. 18 Gauge (0.040 in. or 1 mm) galvanized steel wire formed into a loop on one end, with the other end passed through the loop, pulled hand tight and bent over. Tie wires spaced a max 12 in. (305 mm) OC.

*Bearing the UL Classification Mark

Last Updated on 2013-10-29

Questions? Print this page Terms of Use Page Top

© 2013 UL LLC

When the UL Leaf Mark is on the product, or when the word "Environment" is included in the UL Mark, please search the UL Environment database for additional information regarding this product's certification.

The appearance of a company's name or product in this database does not in itself assure that products so identified have been manufactured under UL's Follow-Up Service. Only those products bearing the UL Mark should be considered to be Certified and covered under UL's Follow-Up Service. Always look for the Mark on the product.

UL permits the reproduction of the material contained in the Online Certification Directory subject to the following conditions: 1. The Guide Information, Assemblies, Constructions, Designs, Systems, and/or Certifications (files) must be presented in their entirety and in a non-misleading manner, without any manipulation of the data (or drawings). 2. The statement "Reprinted from the Online Certifications Directory with permission from UL" must appear adjacent to the extracted material. In addition, the reprinted material must include a copyright notice in the following format: "© 2013 UL LLC".

ONLINE CERTIFICATIONS DIRECTORY

Assembly No. V-32
HNLJ.V-32
Ventilation Duct Assemblies

Page Bottom

Design/System/Construction/Assembly Usage Disclaimer

- Authorities Having Jurisdiction should be consulted in all cases as to the particular requirements covering the installation and use of UL Certified products, equipment, system, devices, and materials.
- Authorities Having Jurisdiction should be consulted before construction.
- Fire resistance assemblies and products are developed by the design submitter and have been investigated by UL for compliance with applicable requirements. The published information cannot always address every construction nuance encountered in the field.
- When field issues arise, it is recommended the first contact for assistance be the technical service staff provided by the product manufacturer noted for the design. Users of fire resistance assemblies are advised to consult the general Guide Information for each product category and each group of assemblies. The Guide Information includes specifics concerning alternate materials and alternate methods of construction.
- Only products which bear UL's Mark are considered Certified.

Ventilation Duct Assemblies

See General Information for Ventilation Duct Assemblies

Assembly No. V-32

October 29, 2013

Duct A	
Fire Resistance Rating	1 Hr

ONLINE CERTIFICATIONS DIRECTORY

UL Product iQ
UL'S NEXT GENERATION CERTIFICATIONS SEARCH
The same trusted data in a modern search engine.
NOW AVAILABLE
> LEARN MORE

System No. F-C-7057
XHEZ.F-C-7057
Through-penetration Firestop Systems

Page Bottom

Design/System/Construction/Assembly Usage Disclaimer

- Authorities Having Jurisdiction should be consulted in all cases as to the particular requirements covering the installation and use of UL Certified products, equipment, system, devices, and materials.
- Authorities Having Jurisdiction should be consulted before construction.
- Fire resistance assemblies and products are developed by the design submitter and have been investigated by UL for compliance with applicable requirements. The published information cannot always address every construction nuance encountered in the field.
- When field issues arise, it is recommended the first contact for assistance be the technical service staff provided by the product manufacturer noted for the design. Users of fire resistance assemblies are advised to consult the general Guide Information for each product category and each group of assemblies. The Guide Information includes specifics concerning alternate materials and alternate methods of construction.
- Only products which bear UL's Mark are considered Certified.

XHEZ - Through-penetration Firestop Systems

XHEZ7 - Through-penetration Firestop Systems Certified for Canada

See General Information for Through-penetration Firestop Systems

See General Information for Through-penetration Firestop Systems Certified for Canada

System No. F-C-7057

March 27, 2017

ANSI/UL1479 (ASTM E814)	CAN/ULC S115
F Rating — 1 Hr	F Rating — 1 Hr
T Rating — 1 Hr	FT Rating — 1 Hr
	FH Rating — 1 Hr
	FTH Rating — 1 Hr

UNIFRAX — Product Information Sheet

FyreWrap® DPS Insulation Dryer Protection System

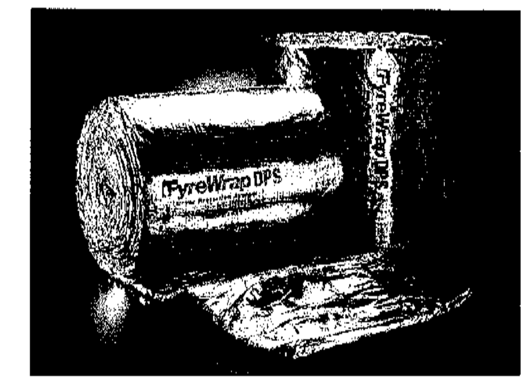

FyreWrap® DPS Insulation – Dryer Protection System

Introduction

Unifrax's FyreWrap® DPS Insulation is a high-temperature insulation blanket specifically designed, UL tested and certified to provide a single layer, one-hour rated flexible enclosure around dryer and residential kitchen exhaust ductwork.

Dryer Exhaust Applications

FyreWrap DPS is an innovative product that provides a safe and cost-effective means to achieve a one-hour fire resistance rated zero clearance enclosure for routing dryer ductwork, from start to finish, through rated wood truss/joist construction as prescribed by the International Building and Mechanical Codes.

FyreWrap DPS Insulation offers the following product features:

- Lightweight, flexible product form
- Scrim encapsulated
- Easy to cut, fabricate, wrap around ducts, pipes or cables
- Thin, single-layer design
- High-temperature, low biopersistance fiber

Product Components

Core Material: FyreWrap DPS Insulation incorporates Insulfrax® Thermal Insulation as its core material. Insulfrax is a high-temperature insulation made from a calcia, magnesia, silica chemistry designed to enhance biosolubility. It provides excellent insulation in a noncombustible blanket product form.

Encapsulating Material: The core insulation blanket is completely encapsulated in an aluminum foil, fiberglass reinforced scrim covering. This scrim provides additional handling strength as well as protection from moisture absorption and tearing.

Typical Product Parameters

Thickness	½"
Density	8pcf
Covering	Scrim Encapsulated
Product Availability	16"w x 25LF
	24"w x 25LF
	26"w x 25LF
	48"w x 25LF

Typical System Properties

ISO 6944	UL Assembly No. V-32, ULC Assembly No. FRD-29	
UL 1479 (ASTM E814), CAN/ULC S115	UL Assembly Nos. F-C-7057, F-C-7058	
Intertek Laboratories (OPL) Listed	Applied Fire Protection, File 16341-3	
ASTM E136 Noncombustibility Test	Passes	
ASTM E84, UL 723, ULC S102.2	UL File No. R14514	
	Unfaced Blanket	Encapsulated
Flame Spread Rating:	Zero	<25
Smoke Developed Rating:	Zero	<50

Data are average results of tests conducted under standard procedures and are subject to variation. Results should not be used for specification purposes.

Refer to the product Safety Data Sheet (SDS) No. M0456 for recommended work practices and other product safety information.

FyreWrap

Installation

FyreWrap DPS Insulation consists of a single-layer system applied directly on to the surface of the duct or combustible item.

Dryer Applications

Install the insulation around the duct to provide a 1" longitudinal compression joint or overlap. Adjacent pieces of insulation should be installed with a 1" perimeter compression joint or material overlap. The 16" width DPS product facilitates linear installation around 4" diameter dryer ductwork without material cutting or scrap. The same technique can be used with wrapping 26" wide FyreWrap DPS on 7" diameter dryer ductwork. To temporarily secure the insulation, optional use of foil tape is permitted. Seal all cut edges with aluminum foil tape to ensure there is no exposed fiber. 18 gauge steel tie wire should be utilized for permanent attachment. Locate the wire ½" from the blanket edge and on maximum 12" centers. Twist tension the wire to firmly hold the wrap system in place, but not so tight as to cut or damage the blanket. Installation details are provided below for additional illustration.

Unifrax has a wide range of FyreWrap fire protection materials available to provide passive fire protection solutions in a variety of applications in the commercial building, industrial facility and transportation industries.

For additional information about product performance or for assistance identifying the recommended product for your fire protection application, please contact Unifrax at 716-768-6500 and ask for Fire Protection Application Engineering.

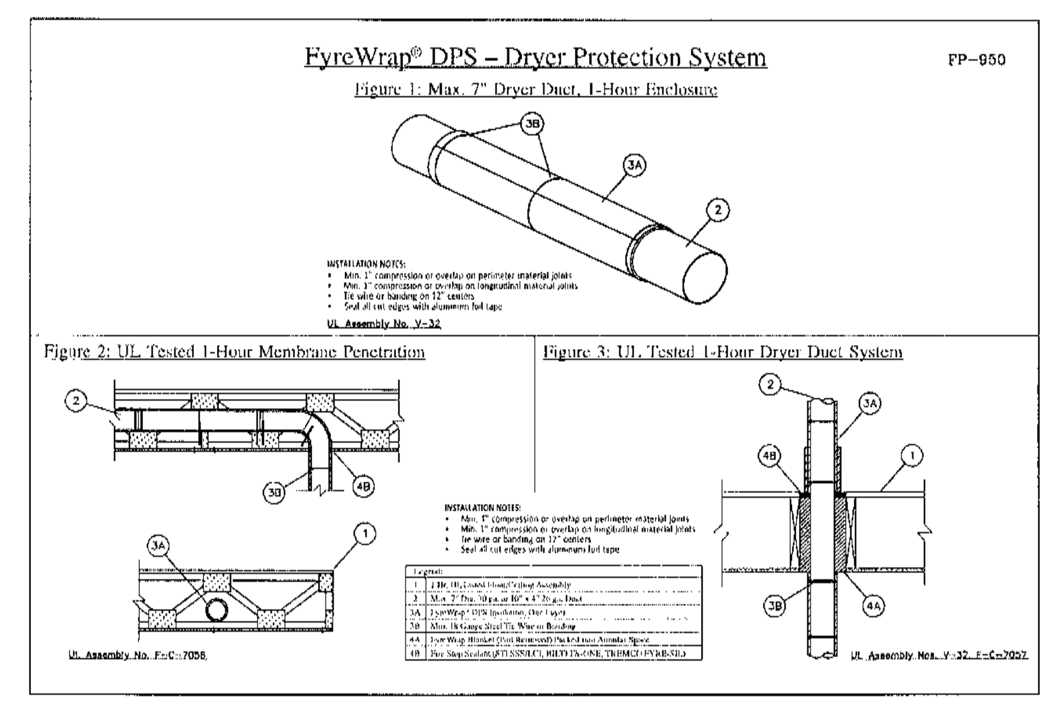

FyreWrap

Form C-1535
Effective 6/16
© 2016 Unifrax I LLC
All Rights Reserved
Printed in USA
Page 2 of 2

The following are registered trademarks of Unifrax: FyreWrap, Insulfrax.

The test data shown are average results of tests conducted under standard procedures and are subject to variation. Results should not be used for specification purposes.

Product Information Sheets are periodically updated by Unifrax. Before relying on any data or other information in this Product Information Sheet, you should confirm that it is still current and has not been superseded. A Product Information Sheet that has been superseded may contain incorrect, obsolete and/or irrelevant data and other information.

Unifrax I LLC
Corporate Headquarters
600 Riverwalk Parkway
Suite 120
Tonawanda, NY 14150
Telephone: 716-768-6500
Canada: 1-800-635-4464
Internet: www.unifrax.com
Email: info@unifrax.com

DUCT FIRE WRAP DETAIL

SCALE: NONE

1 / M4.1

City of Puyallup
Development & Permitting Services
ISSUED PERMIT
Building | Planning
Engineering | Public Works
Fire | Traffic

NO.	DATE	DESCRIPTION
1	7/9/25	PERMIT RESUBMITTAL

REVISIONS

ROBISON ENGINEERING, INC
19401 40TH AVE W., SUITE 302
LYNNWOOD, WA 98036
206-364-3343 TEL

JACOB J. O'BRIEN, STATE OF WASHINGTON, 23001780, REGISTERED PROFESSIONAL ENGINEER, 06/25/2025

DRAWN: OP
DESIGNED: ABE
CHECKED: PR
APPROVED: JMR

PROJECT: EAST TOWN CROSSING CLUBHOUSE
MULTIFAMILY DEVELOPMENT
PIONEER WAY & SHAW RD. PUYALLUP, WA

ROBISON ENGINEERING, INC
19401 40TH AVE W. SUITE 302
LYNNWOOD, WA 98036
PHONE:(206)364-3343
REI PROJECT NO.: 810-010
CONTACT: ARIK ESPINELI

DATE: 07/09/2025

SHEET TITLE: DETAILS & DIAGRAMS

SHEET NO. **M4.1**

COPYRIGHT 2021, ROBISON ENGINEERING, INC.
MNELSON F:\810-010 EAST TOWN CROSSING\DWG\M000 COVER SHEET.DWG 01-02-2021 13:59

GENERAL NOTES

1. REFERENCE TO RELATED WORK: "REF" INDICATIONS DENOTE WORK COVERED ELSEWHERE (ARCHITECTURAL, STRUCTURAL, CIVIL, ELECTRICAL, LANDSCAPE, OR KITCHEN), OR ITEM BASED ON A SPECIFIC MANUFACTURER'S DIMENSIONS (VERIFY).
2. ELECTRICAL CHARACTERISTICS: REFER TO ELECTRICAL DRAWINGS FOR ELECTRICAL CHARACTERISTICS (VOLTAGES, ETC. OF MECHANICAL EQUIPMENT, UNLESS OTHERWISE INDICATED.
3. CODES: COMPLETE INSTALLATION OF THE PLUMBING SYSTEM SHALL BE PER THE APPLICABLE BUILDING, MECHANICAL, ENERGY, PLUMBING, FIRE, AND HEALTH CODES AND REGULATIONS AS ADOPTED BY THE LOCAL AHJ.
4. PREPARE AND SUBMIT FOR REVIEW A SHOP DRAWING BASED ON FINAL STRUCTURAL SHOP DRAWINGS FOR LOCATING AND ROUTING ALL EQUIPMENT, PIPING, ETC.
   A. COORDINATE FLOOR AND BEAM PENETRATIONS WITH STRUCTURAL.
   B. COORDINATE FINAL LOCATION AND ROUTING WITH CEILING, LIGHTS, WALLS, FIRE SPRINKLER PIPING, AND OTHER TRADES WORK.
   C. INCLUDE ADDITIONAL OFFSETS, ELBOWS, ROUTING, EQUIVALENT DUCT SIZING EXCHANGE, RELOCATING, ETC. AS REQUIRED FOR A COMPLETE OPERATING MECHANICAL SYSTEM.
   D. PROVIDE SHOP DRAWINGS AT NO ADDITIONAL COST TO THE OWNER.
5. PLUMBING CONTRACTOR SHALL LOCATE AND COORDINATE EXACT LOCATION OF ALL PLUMBING EQUIPMENT WITHIN THE STRUCTURE.
6. ACCESS DOORS: COORDINATE WITH ARCHITECT AND LOCATE ALL ACCESS DOORS ON SHOP DRAWINGS PRIOR TO BEGINNING OF CONSTRUCTION. ACCESS DOORS IN FIRE RATED STRUCTURE SHALL BE FIRE RATED. VERIFY ACCESS DOOR LOCATIONS WITH GENERAL CONTRACTOR PRIOR TO BIDDING.
7. ROOF PENETRATIONS: SEE ARCHITECTURAL DRAWINGS FOR ROOF CAP, ROOF CURB, ROOF DRAIN, OVERFLOW DRAINS AND VTR DETAILS.
8. EXPOSED PIPING: PROVIDE CHROME PLATING FOR EXPOSED PIPING IN FINISHED ROOMS.
9. PENETRATIONS; PROVIDE ESCUTCHEON PLATES FOR EXPOSED PIPING PENETRATIONS AND SHEET METAL FLASHING FOR EXPOSED DUCTWORK PENETRATIONS.
10. SHAFT AND PLENUM CONNECTIONS: SEAL CONNECTIONS TO AIR SHAFTS AIRTIGHT. PROVIDE AIRTIGHT SEAL AROUND PENETRATIONS IN AIR PLENUMS.
11. LIGHT FIXTURE CLEARANCE: COORDINATE LOCATIONS OF MECHANICAL WORK TO PROVIDE CLEARANCES OVER LIGHTING FIXTURES FOR REMOVAL AND REPLACEMENT.
12. CABLE TRAYS: PIPING INSTALLED ADJACENT TO ELECTRICAL CABLE TRAYS SHALL ALLOW MINIMUM ACCESS OF 6" ABOVE AND TO THE SIDE OF CABLE TRAYS.
13. MOTORS: COMPLY WITH ENERGY CODE ENFORCED BY AHJ FOR MINIMUM EFFICIENCIES UNDER FULL LOAD.
14. ACCESS CLEARANCES FOR MAINTENANCE AND REPLACEMENT: VERIFY PHYSICAL DIMENSIONS OF EQUIPMENT TO ENSURE THAT ACCESS CLEARANCES CAN BE MET. COORDINATE LOCATIONS OF MECHANICAL WORK AND WORK OF OTHER TRADES TO PROVIDE ACCESS CLEARANCES FOR SERVICE AND MAINTENANCE.

COORDINATION REQUIREMENTS

1. IRRIGATION SYSTEM: COORDINATE IRRIGATION WATER DEMAND, MINIMUM WATER PRESSURE REQUIREMENTS & CONTROL CABINET LOCATIONS WITH IRRIGATION CONTRACTOR.
2. GAS: CONTRACTOR/GAS COMPANY SHALL FINALIZE GAS METER AND GAS SERVICE LOCATIONS. INSTALL SEISMIC GAS SHUT OFF VALVE PER GAS COMPANY REGULATIONS.
3. UTILITIES: COORDINATE WITH SITE UTILITY CONTRACTOR AND CIVIL DRAWINGS FOR UTILITY CONNECTIONS AND EXTENSIONS.
4. ROOF DRAINAGE: COORDINATE WITH GENERAL CONTRACTOR FOR ROOF DRAIN AND OVERFLOWS, SCUPPER DRAINS, AND CONDENSATE DRAINS.
5. PLUMBING FIXTURES & EQUIPMENT: COORDINATE EXACT LOCATION OF ALL PLUMBING FIXTURES & EQUIPMENT WITH ARCHITECTURAL AND OTHER TRADES DOCUMENTS.
6. PIPING: COORDINATE EXACT LOCATION OF ALL STRUCTURAL FRAMING & FOOTINGS AND FINALIZE THE EXACT ROUTING OF ALL PIPES WITH STRUCTURAL ENGINEER AT THE SITE PRIOR TO AND DURING THE CONSTRUCTION. COORDINATE UNDER GRADE PIPING & FOUNDATION DRAINAGE PIPING WITH CIVIL ENGINEER.
7. ADJUSTMENTS: ALL EQUIPMENT, MOTORS, FANS GAS BURNERS, IGNITION DEVICES, DRIVES, ETC. SHALL BE ADJUSTED AND BALANCED TO OPERATE AT SPECIFIED RATINGS AS REQUIRED FOR THIS PROJECT SITE AND ACCOUNTING FOR ELEVATION ABOVE SEA LEVEL.
8. APPROVALS: MECHANICAL AND PLUMBING EQUIPMENT SHALL BE APPROVED FOR INSTALLATION IN THE PROJECT LOCATION AND SHALL HAVE ALL CERTIFICATIONS AND RATINGS TO MEET ALL ENERGY, POLLUTION, ENVIRONMENTAL, SEISMIC, APPLICABLE CODES AND REGULATIONS. THE CONTRACTOR SHALL COORDINATE WITH MANUFACTURE SUPPLIERS AND SHALL INCLUDE ALL COSTS REQUIRED TO MEET THE BID DOCUMENTS.
9. FIRE PROTECTION: CONTRACTOR SHALL PROVIDE A FULLY DESIGNED FIRE PROTECTION SPRINKLER SYSTEM IN COMPLIANCE WITH NFPA AND LOCAL CODES. PROVIDE DESIGN, PERMITS, MATERIALS, INSTALLATION, TESTING AND ALL OTHER FOR A FULLY OPERATIONAL SYSTEM. LOCATION OF ALL PIPING TO BE COORDINATED WITH OTHER TRADES.
10. PRIOR TO PIPING INSTALLATION: PLUMBING CONTRACTOR TO COORDINATE PIPING LAYOUT WITH ALL OTHER TRADES.
11. ACCESS: COORDINATE ALL ACCESS LOCATIONS WITH GENERAL CONTRACTOR AND ARCHITECT TO ENSURE ALL REQUIRED ACCESS HATCHES, ACCESS PANELS & ACCESS COVERS ARE PROVIDED.
12. PROVIDE WATER TIGHT SEALS FOR ANY PIPING PENETRATING THE EXTERIOR FOUNDATION WALLS OR SLABS.
13. ANY DISCREPANCIES SHOULD BE REPORTED TO THE ARCHITECT IMMEDIATELY.
14. PROVIDE FIRE PROOFING FOR ALL PIPING PENETRATING FIRE BARRIER WALLS OR FLOOR SLABS.

DISINFECTION OF POTABLE WATER SYSTEM REQUIREMENTS

1. NEW OR REPAIRED POTABLE WATER SUPPLY SYSTEMS SHALL BE DISINFECTED PRIOR TO USE.
2. INITIAL COLIFORM SAMPLE IS REQUIRED PRIOR TO ADMINISTERING WATER-CHLORINE SOLUTION.
3. SECTION 609.9 ITEMS #2 OR #3 CAN BE USED PRECEDED BY AND FOLLOWED BY ITEM #1.
   3.1. NOTE FILL PORT TO ADD CHLORINE MUST BE WHERE WATER SUPPLY ENTERS BUILDING AND A FLOW METER TO MEASURE SOLUTION.
4. AFTER WATER0CHLORINE SOLUTION IS INCORPORATED INTO THE NEW OR REPAIRED WATER SUPPLY SYSTEM A 48 HOUR WAITING PERIOD MUST BE OBSERVED PRIOR TO BACTERIOLOGICAL TEST.
5. BACTERIOLOGICAL TEST SHALL BE CONDUCTED BY A LABORATORY CERTIFIED FOR DRINKING WATER IN WASHINGTON STATE AFFIRMING WATER QUALITY CONTAINS NO COLIFORM BY SAMPLE TESTING THE FURTHEST FIXTURE FROM PUBLIC WATER SOURCE AND NOT LESS THAN TWO OTHER LOCATIONS PART OF THE WATER SUPPLY SYSTEM.
6. CHLORINE LEVEL IN THE NEW OR REPAIRED WATER SUPPLY SYSTEM SHALL NOT BE LESS THAN THE MEAN AVERAGE OF THE AREA IN RELATIONSHIP FROM THE WATER PURVEYOR SOURCE.
7. WARNING: IN CASE A WATER SOFTENER IS PART OF THE COLD WATER SYSTEM, CONTRACTOR TO ENSURE THE WATER SOFTENER IS CONNECTED AND OPERATIONAL BEFORE STARTING THE DISINFECTION PROCESS. FAILURE TO FOLLOW THE INSTRUCTIONS WILL VOID THE WATER HEATER OR HEAT PUMP WARRANTY.

SYMBOLS

GENERAL

- ARCHITECTURAL BACKGROUND (THIN LINE)
- NEW PIPING (HEAVY LINE)
- EXISTING PIPING (THIN LINE)
- EXISTING WORK TO BE REMOVED
- MATCHLINE OR PROPERTY LINE
- CONNECTION TO EXISTING

SECTION IDENTIFICATION

- INDICATES DIRECTION OF CUTTING PLANE
- LETTER INDICATES SECTION (NO. INDICATES DETAIL)
- SHEET NUMBER WHERE SECTION IS DRAWN
- SHEET NUMBER WHERE SECTION IS TAKEN

DETAIL IDENTIFICATION

- DETAIL NUMBER
- DRAWING/SHEET NUMBER

EQUIPMENT

- HWCP-1 — TYPICAL EQUIPMENT DESIGNATION

PIPING

- W — WASTE BELOW GRADE
- W — WASTE ABOVE GRADE
- PW — PUMPED WASTE
- IW — INDIRECT WASTE
- SS — SANITARY SEWER BELOW GRADE
- SS — SANITARY SEWER ABOVE GRADE
- PSS — PUMPED SANITARY SEWER
- V — VENT
- SD — STORM DRAIN
- OD — OVERFLOW STORM DRAIN
- PSD — PUMPED STORM DRAIN
- CD — CONDENSATE DRAIN
- PCD — PUMPED CONDENSATE DRAIN
- \- — COLD WATER (CW)
- \- - — HOT WATER (HW), POTABLE, 120°F
- 140 — HOT WATER, POTABLE, TEMPERATURE OTHER THAN 120°F
- HOT WATER CIRCULATING (HWC), POTABLE, 120°F
- 140 — HOT WATER CIRCULATING, POTABLE, TEMPERATURE OTHER THAN 120°F
- FOF — FUEL OIL FILL
- FOS — FUEL OIL SUPPLY
- FOR — FUEL OIL RETURN
- FOV — FUEL OIL VENT
- RV — RELIEF VENT
- G — ~~LOW PRE~~SSURE NATURAL GAS
- MPG — ~~MEDIUM~~ PRESSURE NATURAL GAS
- IRR — IRRIGATION (NON POTABLE)
- F — FIRE MAIN

PIPE SYMBOLS

- TOP PIPE CONNECTION
- BOTTOM PIPE CONNECTION
- PIPE TURNING UP
- PIPE TURNING DOWN/DROP
- PIPE CAP
- PIPE PLUG
- UNION
- FLANGE
- WYE STRAINER
- WYE STRAINER WITH CAPPED HOSE END BLOWDOWN VALVE
- BALL VALVE
- BALL VALVE
- GLOBE VALVE
- CHECK VALVE
- BALANCING OR PLUG VALVE
- BUTTERFLY VALVE
- FLEXIBLE CONNECTION IN PIPING
- PRV — PRESSURE REDUCING VALVE (PRV)
- AUTOMATIC CONTROL VALVE, 2-WAY
- AUTOMATIC CONTROL VALVE, 3-WAY
- ID — RELIEF VALVE
- BV — BALANCING/METERING VALVE
- REDUCER

GENERAL

- DIRECTION OF FLOW
- A — PIPE ANCHOR
- PIPE ALIGNMENT GUIDE
- PS — PIPE SUPPORT
- VALVE STATION OR ASSEMBLY
- ID — INDIRECT DRAIN, PIPE TO DRAIN
- POINT OF CONNECTION
- RD OD — ROOF DRAIN, OVERFLOW DRAIN
- FLOOR DRAIN
- HOSE BIBB
- BREAK IN PIPING OR DUCTWORK
- GM — GAS METER
- M — INLINE WATER METER
- PUMP
- PRESSURE GAUGE
- THERMOMETER
- P/T — PRESSURE/TEMPERATURE TEST PORT
- RPBP — REDUCED PRESSURE BACKFLOW PREVENTER
- DCVA — DOUBLE CHECK VALVE ASSEMBLY
- CATCH BASIN - SAND/OIL INTERCEPTOR
- TRENCH DRAIN
- EMERGENCY GAS SHUT-OFF VALVE
- SEISMIC GAS SHUT-OFF VALVE
- WASHER BOX
- GREASE INTERCEPTOR

ABBREVIATIONS

ABV	ABOVE
AD	AREA DRAIN
AFF	ABOVE FINISHED FLOOR
AHJ	AUTHORITY HAVING JURISDICTION
BFF	BELOW FINISHED FLOOR
BFP	BACKFLOW PREVENTER
BOH	BACK OF HOUSE
BP	BOOSTER PUMP
BT	BATHTUB
BTUH	BRITISH THERMAL UNIT PER HOUR
BV	BALANCING VALVE
C	COMMON
CAP	CAPACITY
CB	CATCH BASIN
CD	CONDENSATE DRAIN
CFF	CAPPED FOR FUTURE
CFM	CUBIC FEET PER MINUTE
CI	CAST IRON
CLG	CEILING, COOLING
CLW	CLOTHES WASHER
CO	CLEANOUTS
COMB	COMBUSTION
CONT	CONTINUE, CONTROL
CONTR	CONTRACTOR
COTG	CLEANOUTS TO GRADE
CP	CIRCULATING PUMP
CV	CHECK VALVE
CW	COLD WATER
D	DIAMETER
DB	DRY BULB, DECIBEL
DF	DRINKING FOUNTAIN
DFU	DRAIN FIXTURE UNITS
DI	DUCTILE IRON
DIM	DIMENSION
DN	DOWN
DS	DOWN SPOUT
DWG	DRAWING
(E)	EXISTING
EFF	EFFICIENCY
ELEC	ELECTRIC
EQUIV	EQUIVALENT
EWC	ELECTRIC WATER COOLER
EWH	ELECTRIC WATER HEATER
EXT	EXTERIOR, EXTERNAL
F	FAHRENHEIT
FCO	FLOOR CLEANOUTS
FD	FLOOR DRAIN
FDC	FIRE DEPARTMENT CONNECTION
FF	FINISHED FLOOR
FLR	FLOOR
FPM	FEET PER MINUTE
FPS	FEET PER SECOND
FS	FLOOR SINK
FT	FEET
FU	FIXTURE UNITS
G	GAS (LOW PRESSURE)
GAL	GALLONS
GD	GARAGE DRAIN
GM	GAS METER
GPG	GRAINS PER GALLON
GPM	GALLONS PER MINUTE
GV	GATE VALVE
GWB	GYPSUM WALLBOARD
GWH	GAS WATER HEATER
HB	HOSE BIBB
HD	HEAD
HDR	HUB DRAIN
HEDV	HOSE END DRAIN VALVE
HORIZ	HORIZONTAL
HP	HORSEPOWER
HPCW	HIGH PRESSURE COLD WATER
HW	HOT WATER
HWC	HOT WATER RE-CIRCULATION
HWCP	HOT WATER CIRCULATION PUMP
HWR	HOT WATER RETURN
HWST	HOT WATER STORAGE TANK
HX	HEAT EXCHANGER
ICW	INDUSTRIAL COLD WATER
ID	INDIRECT DRAIN, INSIDE DIAMETER
IE	INVERT ELEVATION
IHW	INDUSTRIAL HOT WATER
IN	INCH
KS	KITCHEN SINK
KW	KILOWATT
L	LONG, LENGTH
LAV	LAVATORY
LB	POUND
M	WATER METER
MBH	THOUSAND BTU PER HOUR
MECH	MECHANICAL
MCA	MIN. CIRCUIT AMPACITY
MOCP	MAX. OVER CURRENT PROTECTION
MPG	MEDIUM PRESSURE GAS
MTD	MOUNTED
(N)	NEW
NC	NORMALLY CLOSED
NO	NORMALLY OPEN
OD	OUTSIDE DIMENSION/DIAMETER
	OVERFLOW DRAIN/DECK DRAIN
OPD	OVER PRESSURE DEVICE
OPNG	OPENING
P	PUMP
PD	PRESSURE DROP, PLANTER DRAIN
POC	POINT OF CONNECTION
PRV	PRESSURE REDUCING VALVE
	PRESSURE RELIEF VALVE
PS	PUMPED STORM DRAINAGE
PSIG	POUNDS PER SQUARE INCH GAUGE
PSD	PUMPED STORM DRAINAGE
PSS	PUMPED SANITARY SEWER
PSW	PUMPED SANITARY WASTE
PW	PUMPED WASTE
RD	ROOF DRAIN
REF	REFERENCE
RPBP	REDUCED PRESSURE BACKFLOW PREVENTER
RPM	REVOLUTIONS PER MINUTE
S	SINK
SCH	SCHEDULE
SCW	SOFTENED COLD WATER
SD	STORM DRAIN
SEP	SEWAGE EJECTOR PUMP
SF	SQUARE FOOT
SGSV	SEISMIC GAS SHUT-OFF VALVE
SH	SHOWER
SO	STORM OVERFLOW
SP	STATIC PRESSURE/SUMP PUMP
SR	SUDS RELIEF
SS	STAINLESS STEEL/SANITARY SEWER
SSS	SIDE SANITARY SEWER
STD	STANDARD
SQ	SQUARE
TD	TRENCH DRAIN
TMV	THERMOSTATIC MIXING VALVE
TP	TRAP PRIMER
TYP	TYPICAL
UH	UNIT HEATER
UON	UNLESS OTHERWISE NOTED
UR	URINAL
V	VENT
VTR	VENT THRU ROOF
W	WASTE, WATT, WIDE
WC	WATER CLOSET
WCO	WALL CLEANOUTS
WHD	WALL HYDRANT
WM	WASHING MACHINE
WSFU	WATER SUPPLY FIXTURE UNITS

CONTRACTOR SUBSTITUTIONS & REVISIONS

PRCNC20250692

PLEASE SUBMIT PROPOSALS FOR SUBSTITUTIONS OR REVISIONS FOR REVIEW AND APPROVAL PRIOR TO ORDERING MATERIAL OR DOING WORK. FOR EQUIPMENT THAT IS SCHEDULED BY MANUFACTURER'S NAME AND CATALOG DESIGNATIONS, THE MANUFACTURER'S PUBLISHED DATA AND/OR SPECIFICATION FOR THAT ITEM ARE CONSIDERED PART OF SPECIFICATION. ENGINEERING COSTS FOR REVISING MEP PLANS SHALL BE ADDRESSED IN THE COST ANALYSIS OF THE SUBSTITUTION PROPOSAL. CONTRACTOR TO COORDINATE WITH ENGINEER AND DETERMINE ASSOCIATED DESIGN AND PERMITTING COSTS. CONTRACTOR SHALL BE RESPONSIBLE FOR OTHER COSTS ASSOCIATED WITH UNFORESEEN ISSUES RESULTING FROM SUBSTITUTIONS OR REVISIONS.

APPLICABLE CODES

THE FOLLOWING PROJECT DESIGN IS BASED ON THE FOLLOWING CODES:

-2021 INTERNATIONAL STATE BUILDING CODE (IBC) WITH WASHINGTON STATE AMENDMENTS
-2021INTERNATIONAL MECHANICAL CODE (CMC) WITH WASHINGTON STATE AMENDMENTS
-2021 UNIFORM PLUMBING CODE (UPC) WITH WASHINGTON STATE AMENDMENTS
-2021 INTERNATIONAL ENERGY CONSERVATION CODE (IECC)

NOTE TO CONTRACTOR

DRAWINGS ARE DIAGRAMMATIC, SHOWING THE GENERAL LOCATION, TYPE, LAYOUT, AND EQUIPMENT REQUIRED. THE DRAWINGS SHALL NOT BE SCALED FOR EXACT MEASUREMENT. REFER TO ARCHITECTURAL DRAWINGS FOR DIMENSIONS. REFER TO MANUFACTURER'S STANDARD INSTALLATION DRAWINGS FOR EQUIPMENT CONNECTIONS AND INSTALLATION REQUIREMENTS. PROVIDE DUCTWORK, CONNECTIONS, ACCESSORIES, OFFSETS, AND MATERIALS NECESSARY FOR A COMPLETE SYSTEM.

DRAWING INDEX

DWG	SHEET TITLE
P0.00	LEGEND, GENERAL NOTES, AND DRAWING INDEX
P0.01	PLUMBING NOTES AND TABLES
P0.02	PLUMBING CALCULATIONS
P0.03	PLUMBING SCHEDULES
P2.00	UNDERSLAB WASTE & VENT PLAN
P2.01	LEVEL 1 WASTE & VENT PLAN
P2.02	LEVEL 2 WASTE & VENT PLAN
P2.03	ROOF WASTE & VENT PLAN
P3.00	UNDERSLAB SUPPLY PLAN
P3.01	LEVEL 1 SUPPLY PLAN
P3.02	LEVEL 2 SUPPLY PLAN
P4.00	DETAILS
P4.01	DETAILS
P4.02	DETAILS

NO.	DATE	REVISIONS DESCRIPTION
1.	7/9/25	PERMIT REVIEW COMMENTS

ROBISON ENGINEERING, INC
19401 40TH AVE W., SUITE 302
LYNNWOOD, WA 98036
206-364-3343 TEL

REED JACKSON — STATE OF WASHINGTON — REGISTERED PROFESSIONAL ENGINEER
7/09/25

DRAWN:	DESIGNED:	CHECKED:	APPROVED:
JM	JM	RJ	RJ

PROJECT: EAST TOWN CROSSING - CLUBHOUSE
MULTIFAMILY DEVELOPMENT
PIONEER WAY & SHAW RD. PUYALLUP, WA

ROBISON ENGINEERING, INC
19401 40TH AVE W. SUITE 302
LYNNWOOD, WA 98036
PHONE:(206)364.3343

DATE: 7-09-2025

SHEET TITLE: LEGEND, GENERAL NOTES, AND DRAWING INDEX

SHEET NO. P0.00

City of Puyallup
Development & Permitting Services
ISSUED PERMIT
Building | Planning | Engineering | Public Works | Fire | Traffic

PLUMBING TABLES

PIPE MATERIALS

PIPE TYPE	MATERIAL	JOINT	NOTES
UNDERGROUND WATER SERVICE ENTRANCE PIPING	STAINLESS	THREADED, WELDED OR PROPRESS	2
WATER DISTRIBUTION PIPING - MAIN DISTRIBUTION PIPING	SCHEDULE 80 CPVC	SOLVENT CEMENT	4
UNDERGROUND WASTE AND VENT PIPING	SCHEDULE 40 SOLID WALL PVC	SOLVENT CEMENT	
ABOVE GROUND WASTE AND VENT PIPING	SCHEDULE 40 ABS OR PVC	SOLVENT CEMENT	
CONDENSATE DRAIN PIPING	COPPER, TYPE M	SOLDERED	3

NOTES:

1. ALL SANITARY SYSTEM MATERIALS SHALL BE LISTED BY AN APPROVED LISTING AGENCY.
2. PLASTIC WRAP UNDERGROUND WATER SUPPLY PIPING TO PREVENT CORROSION.
3. CPVC IS ACCEPTABLE FOR CONDENSATE PIPING IN LIEU OF COPPER IF APPROVED BY AHJ.
4. PROVIDE THERMAL EXPANSION LOOPS FOR ALL WATER PIPING PER MANUFACTURER REQUIREMENTS.

PIPE INSULATION SCHEDULE

SERVICE	INSULATION		VAPOR RETARDER REQUIRED	NOTES
	CONDUCTIVITY (Btu*in./(h*ft²*°F)	THICKNESS		
DOMESTIC COLD WATER, IRRIGATION WATER, CONDENSATE DRAINS, STORM DRAIN (IN CONDITIONED SPACE)	0.21-0.27	<1" PIPE: 0.5" ALL OTHER SIZES: 1"	YES	12,13
DOMESTIC COLD WATER, IRRIGATION WATER, CONDENSATE DRAINS, WASTE (OUTSIDE THE CONDITIONED SPACE)	0.21-0.27	<1½" PIPE: 1" ALL OTHER SIZES: 1.5"	YES	1,7,8,10
DOMESTIC HOT WATER AND RECIRCULATED HOT WATER (OUTSIDE THE CONDITIONED SPACE)	0.21-0.28	<1½" PIPE: 1" ALL OTHER SIZES: 1.5"	NO	1,2
EXPOSED SANITARY DRAINS AND DOMESTIC WATER SUPPLIES AND STOPS FOR ADA FIXTURES.	TRUEBRO LAV-GUARD	N/A	NO	11

NOTES:

1. PIPING INSULATION EXPOSED TO THE WEATHER SHALL BE PROTECTED FROM DAMAGE. CONTRACTOR SHALL PROVIDE ALUMINUM JACKET SHIELDING FROM SOLAR RADIATION THAT CAN CAUSE DEGRADATION OF THE MATERIAL. ADHESIVE TAPE SHALL NOT BE PERMITTED.
2. PER 2021 WSEC SECTION R403.5.3 (RESIDENTIAL) INSULATION FOR HOT WATER PIPE SHALL HAVE A MINIMUM R-VALUE OF R-3.
3. PIPING FROM WATER HEATER TO THE TERMINATION OF HEATED WATER SUPPLY PIPE SHALL BE INSULATED IN ACCORDANCE WITH TABLE C403.2.9.
4. ON BOTH THE INLET AND OUTLET PIPING OF A STORAGE HOT WATER HEATER, THE FIRST 8 FEET OF PIPING OR PIPING FROM WATER HEATER TO HEAT TRAP SHALL BE INSULATED.
5. HEAT TRACED PIPING SHALL BE INSULATED IN THE SAME MANNER AS NON HEAT TRACED PIPING OR PER THE HEAT TRACE MANUFACTURER'S INSTRUCTIONS.
6. TUBULAR PIPING INSULATION SHALL NOT BE REQUIRED FOR THE FOLLOWING:
   - 6.1. THE TUBING FROM THE CONNECTION AT THE TERMINATION OF THE FIXTURE SUPPLY PIPING TO A PLUMBING FIXTURE OR PLUMBING APPLIANCE.
   - 6.2. VALVES, PUMPS, STRAINERS, AND THREADED UNIONS IN PIPING THAT IS 1 INCH OR LESS IN NOMINAL DIAMETER.
   - 6.3. PIPING FROM USER-CONTROLLED SHOWER AND BATH MIXING VALVES TO THE WATER OUTLETS.
   - 6.4. COLD WATER PIPING OF A DEMAND RECIRCULATION WATER SYSTEM.
   - 6.5. TUBING FROM A HOT DRINKING-WATER HEATING UNIT TO THE WATER OUTLET.
   - 6.6. PIPING AT LOCATIONS WHERE A VERTICAL SUPPORT OF THE PIPING IS INSTALLED.
   - 6.7. PIPING SURROUNDED BY BUILDING INSULATION WITH A THERMAL RESISTANCE (R-VALUE) OF NOT LESS THAN R-3.
   - 6.8. HOT WATER PIPING THAT IS PART OF THE FINAL PIPE RUN TO THE PLUMBING FIXTURE AND IS NOT PART OF THE HEATED-WATER CIRCULATION SYSTEM CIRCULATION PATH IS NOT REQUIRED TO MEET THE MINIMUM INSULATION REQUIREMENTS OF C404.6.
7. PER 2021 UPC SECTION 312.6 NO WATER, SOIL, OR WASTE PIPE SHALL BE INSTALLED OR PERMITTED OUTSIDE OF A BUILDING, IN ATTICS OR CRAWL SPACES, OR IN AN EXTERIOR WALL UNLESS, WHERE NECESSARY, ADEQUATE PROVISION IS MADE TO PROTECT SUCH PIPE FROM FREEZING. ALL HOT AND COLD WATER PIPES OUTSIDE THE CONDITIONED SPACE SHALL BE PROVIDED WITH INSULATION WITH A MINIMUM R-VALUE OF R-3.
8. HEAT TRACING SHALL BE PROVIDED FOR COLD WATER AND IRRIGATION WATER IN UNCONDITIONED SPACES. CONTACT ENGINEERING IF NECESSARY. PER 2021 WSEC SECTION C403.12.3 FREEZE PROTECTION SYSTEMS, SUCH AS HEAT TRACING OF OUTDOOR PIPING, SHALL INCLUDE AUTOMATIC CONTROLS CONFIGURED TO SHUT OFF THE SYSTEMS WHEN OUTDOOR AIR TEMPERATURES ARE ABOVE 40°F.
9. PER 2021 WSEC TABLE C403.2.9 INSULATION FOR HOT WATER AND HOT WATER RECIRCULATION SHALL HAVE A THERMAL CONDUCTIVITY OF 0.21-0.28 (BTU INCH.FT².°F) AT OPERATING TEMPERATURE.
10. INSULATION R-VALUE SHALL MEET THE MINIMUM REQUIREMENT. THICKNESS IS BASED ON GRAINGER SAMPLE DATA FOR K-FLEX(PVC/NBR) AND OWENS CORNING(FIBER GLASS).
11. ALL ADA P-TRAPS, HOT WATER SUPPLY TUBING, AND SHUT-OFF COCKS SHALL BE PROTECTED WITH APPROVED COVERS TO PREVENT SCALDING.
12. REQUIRED BY ENGINEERING BASED ON BEST PRACTICE.
13. INSULATION IS NOT REQUIRED ON PLASTIC COLD WATER PIPING.

HANGER SPACING FOR WATER PIPING

ALL SUSPENDED WATER SUPPLY PIPE SHALL BE SUPPORTED AS FOLLOWS PER 2021 UPC TABLE 313.3:

	MAX. HORIZONTAL SPACING	MAX. VERTICAL SPACING
CPVC PIPE <1"	3 FT.	10 FT.
CPVC PIPE ≥1¼"	4 FT.	10 FT.
STEEL GAS ½"	6 FT.	6 FT.
STEEL GAS ¾"-1"	8 FT.	8 FT.
STEEL GAS > 1½"	10 FT.	10 FT.
PEX < 1"	32 IN.	10 FT.
PEX ≥ 1½"	4 FT.	10 FT.

HANGER SPACING FOR WASTE AND VENT PIPING

ALL SUSPENDED SANITARY AND VENT PIPE SHALL BE SUPPORTED AS FOLLOWS PER 2021 UPC TABLE 313.3:

	MAX. HORIZ. SPACING	MAX. VERT. SPACING
ABS	4 FT.	10 FT.
PVC (TYPE DWV)	4 FT.	10 FT.
CAST-IRON HUBLESS*	EVERY OTHER JOINT	15 FT.

*CAST-IRON OVER 4' SHALL BE SUPPORTED AT EVERY JOINT

PLUMBING FIXTURE FLOW RATES PER 2021 UPC CH. 4

FIXTURE TYPE	FLOW RATE	NOTES
SHOWERHEADS	1.8 GPM @ 80 PSI	
LAVATORY FAUCETS, RESIDENTIAL	1.2 GPM @ 60 PSI	1
LAVATORY FAUCETS, NON-RESIDENTIAL	0.5 GPM @ 60 PSI	2
KITCHEN FAUCETS	1.8 GPM @ 60 PSI	3
GRAVITY TANK-TYPE WATER CLOSETS	1.28 GALLONS/FLUSH	4
FLUSHOMETER TANK WATER CLOSETS	1.28 GALLONS/FLUSH	4
FLUSHOMETER VALVE WATER CLOSETS	1.28 GALLONS/FLUSH	4
ELECTROMECHANICAL HYDRAULIC WATER CLOSETS	1.28 GALLONS/FLUSH	4
URINALS	0.125 GALLONS/FLUSH	

NOTES:

1. LAVATORY FAUCETS SHALL NOT HAVE A FLOW RATE LESS THAN 0.8 GPM AT 20 PSI.
2. WHERE COMPLYING FAUCETS ARE UNAVAILABLE, AERATORS RATED AT 0.35 GPM OR OTHER MEANS MAY BE USED TO ACHIEVE REDUCTION.
3. KITCHEN FAUCETS MAY TEMPORARILY INCREASE FLOW ABOVE THE MAXIMUM RATE, BUT NOT ABOVE 2.2 GPM @ 60 PSI AND MUST DEFAULT TO A MAXIMUM FLOW RATE OF 1.8 GPM @ 60 PSI.
4. INCLUDES SINGLE AND DUAL FLUSH WATER CLOSETS WITH AN EFFECTIVE FLUSH OF 1.6 GALLONS OR LESS. SINGLE FLUSH TOILETS – THE EFFECTIVE FLUSH VOLUME SHALL NOT EXCEED 1.6 GALLONS. THE EFFECTIVE FLUSH VOLUME IS THE AVERAGE FLUSH VOLUME WHEN TESTED IN ACCORDANCE WITH ASME A112.19.2 DUAL FLUSH TOILETS – THE EFFECTIVE FLUSH VOLUME SHALL NOT EXCEED 1.6 GALLONS. THE EFFECTIVE FLUSH VOLUME IS DEFINED AS THE COMPOSITE, AVERAGE FLUSH VOLUME OF TWO REDUCED FLUSHES AND ONE FULL FLUSH. FLUSH VOLUMES WILL BE TESTED IN ACCORDANCE WITH ASME A112.19.2 AND ASME A112.19.14.

PLUMBING NOTES

PRCNC20250692

1. CONNECTIONS: PROVIDE PLUMBING FIXTURE CONNECTIONS TO BUILDING WASTE, VENT, COLD WATER, AND HOT WATER SYSTEM IN ACCORDANCE WITH DRAWINGS, MANUFACTURER'S RECOMMENDATIONS, AND LOCAL CODES. CONNECT TO EACH FIXTURE, EQUIPMENT, ETC. WITH ALL ACCESSORIES, VALVES, VACUUM BREAKERS, REGULATORS, UNIONS, ETC. AS REQUIRED AND AS RECOMMENDED BY THE MANUFACTURERS. REFER TO PLUMBING FIXTURE CONNECTION SCHEDULE ON PLANS.
2. HOT AND COLD: WATER PIPING CONNECTION TO EACH FIXTURE SHALL BE COLD WATER ON THE RIGHT HAND SIDE AND HOT WATER ON THE LEFT HAND SIDE.
3. HOT WATER: NON-CIRCULATING HOT WATER PIPE SHALL NOT EXCEED 10' UNLESS OTHERWISE SHOWN ON DRAWINGS.
4. VENT STACKS: COORDINATE VENT STACK WITH HVAC EQUIPMENT TO MAINTAIN MINIMUM 10' CLEARANCE FROM OUTSIDE AIR INTAKES.
5. CLEANOUTS: PROVIDE CLEANOUTS PER CURRENT UPC AND AS REQUIRED BY LOCAL JURISDICTIONS. CLEANOUTS SHALL BE LOCATED IN WALLS/FLOORS WHERE THEY ARE NOT HIGHLY VISIBLE. FLOOR CLEANOUTS IN CARPETED AREAS TO BE FITTED WITH CARPET INSERTS. LOCATIONS SHALL BE SUBMITTED TO ARCHITECT FOR APPROVAL. NOTE: NOT ALL CLEANOUTS ARE SHOWN ON THE PLUMBING DRAWINGS.
6. SUDS RELIEF: PROVIDE SUDS RELIEF IN ACCORDANCE WITH 2021 UPC SECTION 711.0, STATE AND LOCAL CODES.
7. SHUT-OFFS: PROVIDE 1/4 TURN BALL VALVE ANGLE STOP SHUT-OFF VALVES AND BRAIDED STAINLESS STEEL FLEX CONNECTORS AT HOT AND COLD WATER SUPPLY TO EACH FIXTURE. EXCEPTION: PROVIDE SCREWDRIVER STOPS AT BATH/SHOWERS.
8. TUB SPOUTS SHALL BE THREADED (NO PUSH-ON FITTINGS).
9. TRAP ARMS: PROVIDE TRAP ARMS SUCH THAT THE MAXIMUM LENGTH WILL NOT EXCEED CODE REQUIREMENTS.
10. ADA INSULATION: AT PLUMBING PIPING EXPOSED UNDER LAVATORIES, INSULATE THE EXPOSED PIPING AND TRAPS WITH PRODUCT SPECIFICALLY DESIGNED FOR THIS APPLICATION MEETING ADA REQUIREMENTS. PROVIDE HANDI-LAV GUARD OR EQUIVALENT. OFFSET P-TRAPS TO CLEAR WHEELCHAIR ACCESS.
11. GAS EQUIPMENT: GAS EQUIPMENT SHALL BE INSTALLED PER EQUIPMENT LISTINGS, APPLICABLE SFGC, SPC, LOCAL CODES & NFPA STANDARDS.
12. GAS CONNECTIONS: INSTALL FLEXIBLE QUICK DISCONNECT ASSEMBLIES FOR ALL GAS FIRED KITCHEN EQUIPMENT PER APPLICABLE SFGC, SPC, LOCAL CODES & NFPA STANDARDS. PROVIDE LOCKABLE GAS SHUT-OFF VALVES FOR FIREPLACES & BBQS IN UNATTENDED PUBLIC LOCATIONS IN THE BUILDING.
13. GAS PIPING CONNECTIONS TO WATER HEATERS, BOILERS AND FURNACES SHALL HAVE DIRT LEGS AND UNIONS PROVIDED ON APPLIANCE SIDE OF SHUTOFF VALVE.
14. GAS PIPING INSTALLATION: STEEL OR MALLEABLE IRON FUEL LINES 2" OR SMALLER SHALL BE ASSEMBLED USING THREAD SEALANT SUITABLE FOR NATURAL GAS. GAS PIPING LARGER THAN 2" SHALL HAVE WELDED FITTINGS.
15. GAS PIPING UNDERGROUND: WHERE INSTALLED BELOW GRADE THROUGH THE OUTER FOUNDATION OR BASEMENT WALL OF A BUILDING, SHALL BE ENCASED IN A PROTECTIVE PIPE SLEEVE. THE ANNULAR SPACE BETWEEN THE GAS PIPING AND THE SLEEVE SHALL BE SEALED.
16. GAS PIPING ABOVE GROUND: WHERE PASSING THROUGH AN OUTSIDE WALL, GAS PIPING SHALL BE PROTECTED AGAINST CORROSION BY COATING OR WRAPPING WITH AN INERT MATERIAL. WHERE PIPING IS ENCASED IN A PROTECTIVE PIPE SLEEVE, THE ANNULAR SPACE BETWEEN THE PIPING AND THE SLEEVE SHALL BE SEALED.
17. GAS PIPE SUPPORT: FUEL LINES SHALL BE SUPPORTED OR STRAPPED, AND SHALL BE PLUMB AND SQUARE.
18. GAS PIPING ON ROOFTOPS SHALL BE SUPPORTED AND ANCHORED TO THE ROOF.
19. GAS PIPING SHALL NOT BE BURIED UNDER A BUILDING, SLAB OR OTHER STRUCTURE.
20. GAS PIPING PROTECTIVE COATING: PAINT ALL EXTERIOR EXPOSED GAS PIPING WITH TWO COATS OF RUST INHIBITIVE PAINT. COLOR: GRAY.
21. WATER HAMMER ARRESTORS: PROVIDE AT THE END OF HOT AND COLD WATER LINES SERVING TWO OR MORE FIXTURES; SIZE IN ACCORDANCE WITH PLUMBING AND DRAINAGE INSTITUTE (PDI) REQUIREMENTS. WATER HAMMER ARRESTORS ARE REQUIRED FOR QUICK CLOSING VALVES, SUCH AS LAUNDRY WASHERS, FLUSH VALVES (PUBLIC TOILETS), ETC.
22. TRAP PRIMERS AS SPECIFIED: PROVIDE TRAP PRIMERS AND PIPING FOR FLOOR DRAINS, FLOOR SINKS, AREA DRAINS & HUB DRAINS. ARRANGE PIPING TO ACHIEVE EQUAL FLOW TO EACH DRAIN AND FLOOR SINK FOR TRAP PRIMERS SERVING MULTIPLE DRAINS AND FLOOR SINKS. COORDINATE EXACT LOCATIONS WITH ARCHITECT & ELECTRICAL ENGINEER.
23. P-TRAPS: ALL EXPOSED P-TRAPS SHALL BE CHROME-PLATED BRASS. P-TRAPS SERVING HANDICAPPED COUNTER TOP LAVATORIES SHALL BE INSULATED.
24. THROUGHOUT THE PROJECT PROVIDE BALL VALVES. GATE VALVES SHALL NOT BE USED. NO EXCEPTIONS.
25. HOT WATER RECIRCULATING BALANCING VALVES SHOULD BE BELL & GOSSETT CIRCUIT SETTER (WATTS OR EQUAL) WITH INTEGRAL READOUT PORTS, ADJUSTMENT KNOB, DRAIN CONNECTION, AND POSITIVE SHUTOFF.
26. DISASSEMBLY PROVISIONS: PROVIDE UNIONS OR FLANGES AT PIPING CONNECTIONS TO EQUIPMENT, COILS, TRAPS, CONTROL VALVES, AND OTHER COMPONENTS TO ALLOW DISASSEMBLY FOR MAINTENANCE.
27. REDUCERS: PROVIDE AS REQUIRED FROM LINE PIPE SIZE TO EQUIPMENT, TRAP, COIL, AND CONTROL VALVE CONNECTION SIZES.
28. VALVE TAGS: PROVIDE VALVE TAGS PER SPECIFICATIONS TO IDENTIFY VALVE AND THE AREA IT SERVES.
29. OFFSETS: PROVIDE FOR BRANCH LINES TO EQUIPMENT.
30. ALL TEMPERATURE MIXING VALVES SHALL COMPLY WITH ASSE-1070 SAFETY STANDARDS.
31. PROVIDE PIPE MARKER WITH DIRECTION OF FLOW. LABEL "NON-POTABLE WATER DO NOT DRINK" CLEARLY ON NON-POTABLE WATER PIPING.
32. PROVIDE EXPANSION LOOPS/EXPANSION JOINTS IN PIPING PER 2021 UPC TABLE 313.3 AND MANUFACTURER INSTALLATION INSTRUCTIONS.
33. PROVIDE APPROVED PIPE HANGERS & PIPE SUPPORTS IN ACCORDANCE WITH MANUFACTURER'S INSTALLATION INSTRUCTIONS AND 2021 UPC TABLES 313.3 & 313.6. SUBMIT FOR APPROVAL.
34. DIELECTRIC UNIONS: PROVIDE AT CONNECTIONS OF DISSIMILAR PIPE.
35. REFRIGERANT PIPING: PROVIDE SIZING & INSTALLATION IN STRICT ACCORDANCE WITH MANUFACTURER'S INSTRUCTIONS.
36. CONDENSATE DRAIN: PROVIDE A P-TRAP FOR EACH HVAC UNIT CONDENSATE PAN WITH PLUG TEES FOR CLEANING. CONDENSATE DRAINS SHALL BE DISCHARGED TO AN INDIRECT WASTE OR OUTSIDE.
37. PIPING & EQUIPMENT SUPPORTS/HANGERS & SEISMIC RESTRAINTS TO BE DESIGNED BY DESIGN BUILT CONTRACTOR.
38. IF NEEDED, PROVIDE VACUUM BREAKERS AT ALL HOSE BIBBS.
39. FLOOR DRAINS OR SIMILAR TRAPS DIRECTLY CONNECTED TO THE DRAINAGE AND SUBJECT TO INFREQUENT USE SHALL BE PROVIDED WITH AN APPROVED AUTOMATIC MEANS OF MAINTAINING THEIR WATER SEALS IN ACCORDANCE WITH 2021 UPC 1007.0.
40. INSULATION MATERIAL SHALL MEET CITY OF PUYALLUP QUALITY STANDARDS.
41. ALL PIPING AND DUCTWORK SHALL BE INSULATED CONSISTENT WITH THE 2021 WASHINGTON STATE ENERGY CODE.
42. BUILDING DRAIN AND VENT PIPING MATERIALS SHALL COMPLY WITH 2021 UPC 701.0 AND 903.0.
43. ALL SANITARY SYSTEM MATERIAL SHALL BE LISTED BY AN APPROVED LISTING AGENCY.
44. ALL STORAGE WATER HEATING EQUIPMENT SHALL BE PROVIDED WITH AN APPROVED, LISTED EXPANSION TANK OR OTHER DEVICE DESIGNED FOR INTERMITTENT OPERATION FOR THERMAL EXPANSION CONTROL PER 2021 UPC 608.3.
45. WATER HEATERS SHALL BE ANCHORED OR STRAPPED TO RESIST HORIZONTAL DISPLACEMENTS DUE TO SEISMIC MOTION PER 2021 UMC 507.2.
46. MATERIAL EXPOSED WITHIN A DUCT OR PLENUM SHALL COMPLY WITH 2021 IMC 602.2.1.
47. HVAC EQUIPMENT AND WATER HEATERS SHALL COMPLY WITH 2021 IMC CHAPTER 3.
48. BOILERS SHALL COMPLY WITH ALL THE REQUIREMENTS OF 2021 UPC 505.4.
49. PROVIDE EXPANSION TANKS FOR BOILERS PER 2021 UPC SECTION 608.3.
50. SHOWERS AND TUB/SHOWER COMBINATIONS SHALL BE PROVIDED WITH MIXING VALVES PER 2021 UPC 408.0.
51. PLUMBING FIXTURES AND FITTINGS SHALL COMPLY WITH CITY OF PUYALLUP WATER CONSERVATION STANDARDS.
52. CONTRACTOR SHALL PROVIDE FIRESTOPPING AT PENETRATIONS AS NECESSARY TO RETAIN THE FIRE RATING OF ALL ASSEMBLIES. ALL WORK SHALL BE IN COMPLIANCE WITH CODE REQUIREMENTS FOR THE BUILDING CONSTRUCTION TYPE.
53. ALL GARAGE DRAINS, TRASH ROOMS DRAINS & GARAGE TRENCH DRAINS SHALL BE TAKEN TO SAND/OIL INTERCEPTOR(S) BEFORE CONNECTING TO THE SANITARY SEWER SYSTEM.
54. PLUMBING CONTRACTOR SHALL PROVIDE REDUCED PRESSURE BACKFLOW PREVENTERS OR OTHER APPROVED BACKFLOW PREVENTION DEVICE WHERE REQUIRED BY HEALTH AUTHORITIES, FOOD SERVICE DRAWINGS, APPLIANCE MANUFACTURER INSTRUCTIONS AND BY CODE.

PROVIDE REQUIRED & PROPER BACK FLOW PREVENTERS AS SPECIFIED FOR THE APPLIANCES INCLUDING, BUT NOT LIMITED TO THE FOLLOWING:

a. ICE MACHINES AND ICE MAKERS
b. CARBONATED BEVERAGE DISPENSING SYSTEMS
c. COFFEE BREWERS
d. ESPRESSO MACHINES
e. WATER FILTERS
f. STEAM OR HOT WATER BOILERS
g. IRRIGATION SYSTEM
h. FIRE PROTECTION SYSTEM
i. CHEMICAL TREATMENT SYSTEM
j. SOAP/CHEMICAL DISPENSER SYSTEM
k. COMMERCIAL WASHER

City of Puyallup
Development & Permitting Services
ISSUED PERMIT
Building | Planning
Engineering | Public Works
Fire | Traffic

NO.	DATE	REVISIONS DESCRIPTION
1.	7/9/25	PERMIT REVIEW COMMENTS

ROBISON ENGINEERING, INC
19401 40TH AVE W, SUITE 302
LYNNWOOD, WA 98036
206-364-3343 ttl.

REED JACKSON
STATE OF WASHINGTON
REGISTERED
PROFESSIONAL ENGINEER
7/09/25

DRAWN:	DESIGNED:	CHECKED:	APPROVED:
JM	JM	RJ	RJ

PROJECT: EAST TOWN CROSSING - CLUBHOUSE
MULTIFAMILY DEVELOPMENT
PIONEER WAY & SHAW RD. PUYALLUP, WA

ROBISON ENGINEERING, INC
19401 40TH AVE W. SUITE 302
LYNNWOOD, WA 98036
PHONE:(206)364-3343

DATE:
7-09-2025

SHEET TITLE:
PLUMBING NOTES AND TABLES

SHEET NO.
P0.01

PLUMBING CALCULATIONS

PRCNC20250692

DOMESTIC WATER PRESSURE CALCULATIONS *BASED ON 2021 UPC APPENDIX A*		PRESSURE CHANGE (PSI)	RESIDUAL PRESSURE (PSI)
(PVC) WATER ENTRY TO BOOSTER PUMP			
STREET PRESSURE, PSI,			**55**
PER CALL WITH PUYALLUP WATER DIVISION, PRESSURE RANGE IS 55-60 PSI.			
HIGH-FLOW PRESSURE LOSS ALLOWANCE		**-4**	**51**
EQUIPMENT LOSSES, PSI			
CIVIL WATER METER		**-5**	**46**
CIVIL BACKFLOW PREVENTER		**-12**	**34**
SITE SERVICE LINE FRICTION LOSSES(ESTIMATE)			
PIPING SYSTEM LENGTH, FEET	60		
FITTING ALLOWANCE, FEET	20		
AVERAGE FRICTION LOSS FACTOR, PSI/100'	**7.0**		
TOTAL PIPING FRICTION LOSS		**-5.6**	**28.4**
STATIC HEAD, PSI			
TOTAL ELEVATION GAIN, FEET	3	**-1.299**	**27.1**
FROM UNDERGROUND WATER SERVICE TO BUILDING WATER ENTRY POINT			
MIN. PRESSURE AT BOOSTER PUMP INLET			**27.1**
(CPVC) BOOSTER PUMP TO FURTHEST UPSTAIRS TENANT			
BOOSTER PUMP GAIN			
MINIMUM PRESSURE AT BOOSTER PUMP INLET, PSI			**27.1**
BOOSTER PUMP PRESSURE GAIN, PSI			**47.9**
BOOSTER PUMP DISCHARGE PRESSURE, PSI			**75.0**
STATIC HEAD, PSI			
TOTAL ELEVATION GAIN, FEET	18	**-7.794**	**67.2**
PIPING FRICTION LOSSES			
PIPING SYSTEM LENGTH, FEET	50		
FITTING ALLOWANCE, FEET	12.5		
AVERAGE FRICTION LOSS FACTOR, PSI/100'	**7.0**		
PIPING FRICTION LOSS		**-4.375**	**62.8**
MIN. PRESSURE AT FURTHERST UNIT SUB-METER			**62.8**
(CPVC) FURTHEST ANTICIPATED FIXTURE IN UNIT			
EQUIPMENT LOSSES PSI			
TENANT SUB-METER		**-5**	**57.8**
PEX PIPING FRICTION LOSSES			
PIPING SYSTEM LENGTH, FEET	30		
FITTING ALLOWANCE, FEET	7.5		
ZONE FRICTION LOSS FACTOR, PSI/100'	**7.0**		
PIPING FRICTION LOSS		**-2.625**	**55.2**
MINIMUM PRESSURE AT FURTHEST FIXTURE, PSI			**55.2**

FIXTURE UNIT CALCULATIONS - ETC CLUBHOUSE

CALCULATIONS BASED ON 2021 UPC TABLES A103.1 AND 702.1.

PUBLIC SPACES / MISC.

FIXTURE	FIXTURE UNITS				FLOOR			TOTAL QTY OF FIXTURES	TOTAL FIXTURE UNITS			
	TOTAL	CW	HW	W/V	1	2	R		SERVICE	CW ONLY	HW ONLY	W/V ONLY
LAVATORY	1	0.75	0.75	1	4	2	0	6	6	4.5	4.5	6
WATER CLOSET (PUBLIC FLUSH VALVE)	5	3.75	0	4	5	0	0	5	25	18.75	0	20
URINAL (PUBLICH FLUSH VALVE)	4	4	0	2	1	0	0	1	4	4	0	2
WATER CLOSET (PRIVATE FLUSH TANK)	2.5	1.875	0	3	0	2	0	2	5	3.75	0	6
KITCHEN SINK	1.5	1.125	1.125	2	1	1	0	2	3	2.25	2.25	4
DISHWASHER	1.5	0	1.5	0	1	1	0	2	3	0	3	0
SHOWER (PUBLIC)	2	1.5	1.5	2	3	0	0	3	6	4.5	4.5	6
BATH-TUB W/ SHOWER (PRIVATE)	4	3	3	2	0	2	0	2	8	6	6	4
DRINKING FOUNTAIN	1	0.75	0	1	1	0	0	1	1	0.75	0	1
WASHING MACHINE	4	3	3	3	0	1	0	1	4	3	3	3
HUB DRAIN - 2"	0	0	0	4	0	1	0	1	0	0	0	4
HUB DRAIN - 4"	0	0	0	8	1	0	0	1	0	0	0	8
FLOOR DRAIN - 4"	0	0	0	8	1	0	0	1	0	0	0	8
FLOOR DRAIN - 3"	0	0	0	6	2	0	0	2	0	0	0	12
HOSE BIB	2.5/1	2.5/1	0	0	3	0	0	3	4.5	4.5	0	0
									69.5	52	23.25	84

	TOTAL	CW	HW	W/V
TOTAL FIXTURE UNITS:	69.5	52	23.25	84
DOEMSTIC WATER PEAK FLOW:	58.5 GPM			

REQUIRED SERVICE SIZES IN BUILDING:

DOMESTIC WATER	SEWER SIZE
SERVICE SIZE: 2.5"	4"
	1/4" PER FT

City of Puyallup
Development & Permitting Services
ISSUED PERMIT

Building	Planning
Engineering	Public Works
Fire	Traffic

REVISIONS

NO.	DATE	DESCRIPTION
1.	7/9/25	PERMIT REVIEW COMMENTS

ROBISON ENGINEERING, INC
19401 40TH AVE W, SUITE 302
LYNNWOOD, WA 98036
206-364-3343 ITL

REED JACKSON
STATE OF WASHINGTON
REGISTERED
PROFESSIONAL ENGINEER
7/09/25

DRAWN:	DESIGNED:	CHECKED:	APPROVED:
JM	JM	RJ	RJ

PROJECT:
EAST TOWN CROSSING - CLUBHOUSE
MULTIFAMILY DEVELOPMENT
PIONEER WAY & SHAW RD. PUYALLUP, WA

ROBISON ENGINEERING, INC
19401 40TH AVE W. SUITE 302
LYNNWOOD, WA 98036
PHONE:(206)364.3343

DATE:
7-09-2025

SHEET TITLE:
PLUMBING CALCULATIONS

SHEET NO.
P0.02

PLUMBING SCHEDULES

PRCNC20250692

SUPPLY PIPE SIZING SCHEDULE - CPVC

FRICTION LOSS FACTOR: 7.0 PSI/100 FT

PIPE SIZE	COLD WATER, FLUSH TANK			COLD WATER, FLUSH VALVE			HOT WATER			HOT WATER RECIRCULATION	
	FIXTURE UNITS	FLOW, GPM	VELOCITY, FPS	FIXTURE UNITS	FLOW, GPM	VELOCITY, FPS	FIXTURE UNITS	FLOW, GPM	VELOCITY, FPS	FLOW, GPM	VELOCITY, FPS
1/2"	1.8	2.80	3.90	---	---	---	3.2	3.20	4.40	1.50	2.00
3/4"	7.5	6.50	4.80	---	---	---	7.7	6.70	5.00	2.70	2.00
1"	15.2	11.20	5.00	---	---	---	15.2	11.20	5.00	4.50	2.00
1-1/4"	30.0	20.00	5.00	---	---	---	30.0	20.00	5.00	8.00	2.00
1-1/2"	46.3	27.50	5.00	10.5	27.50	5.00	46.3	27.50	5.00	11.00	2.00
2"	108.1	46.00	5.00	38.4	46.00	5.00	108.1	46.00	5.00	18.40	2.00
2-1/2"	205.3	66.10	5.00	93.5	66.10	5.00	205.3	66.10	5.00	26.40	2.00
3"	389.7	102.90	5.00	264.7	102.90	5.00	389.7	102.90	5.00	41.20	2.00
4"	807.3	179.20	5.00	779.8	179.20	5.00	807.3	179.20	5.00	71.7	2.0
6"	2738.5	406.20	5.00	2738.5	406.20	5.00	2738.5	406.20	5.00	162.5	2.0

FIXTURE SCHEDULE

PLAN MARK	FIXTURE TYPE	SERVICE SIZE - INCHES				LOCATION	FINISH	MANUFACTURER	BASIS OF DESIGN MODEL	FLOW RATE, GPM	NOTES
		CW	HW	W	V						
BT-1	BATH-TUB	1/2	1/2	2	1-1/2	TYPICAL APARTMENT	WHITE	AQUATIC	6030SM	1.75 GPM	1-5,7
	IN-WALL VALVE						N/A	CFG	45312		
	TRIM KIT						CHROME	CFG	40311CGR		
LV-1	LAVATORY	1/2	1/2	1-1/2	1-1/2	TYPICAL APARTMENT	WHITE	CASCADIAN	L1560	1.2 GPM	1-5
	FAUCET						CHROME	PFISTER	LG1420600C		
KS-1	KITCHEN SINK	1/2	1/2	2	1-1/2	TYPICAL APARTMENT	STAINLESS	MOEN	G20193	1.8 GPM	1-5
	FAUCET						CHROME	PEERLESS	P188152LF		
WC-1	WATER CLOSET	1/2	---	3	2	TYPICAL APARTMENT	WHITE	WESTERN POTTERY	B832 .-T8ULF -HP	1.28 GPF	1-6
	SEAT						WHITE	COMFORT SEATS	C014WD		
WB-1	WASHER BOX	3/4	3/4	2	1-1/2	TYPICAL APARTMENT	WHITE	SIOUX CHIEF	696-2313	N/A	1-5
HB-1	WALL HYDRANT	3/4	---	---	---	PER DWGS.	N/A	WOODFORD	B65	N/A	1-3,5,8

NOTES:

1. REFER TO ARCH PLANS FOR MOUNTING HEIGHT.
2. CONTRACTOR SHALL CONFIRM MAKE, MODEL, AND FINISH OF ALL FIXTURES WITH OWNER, ARCHITECT, AND INTERIOR DESIGNER PRIOR TO ORDERING.
3. PROVIDE RED/HOT AND BLUE/COLD WATER INDICATORS TO ALL FIXTURES.
4. ALL FIXTURE P-TRAPS SHALL BE CHROME-PLATED BRASS.
5. PROVIDE DAHL 1/4-TURN BALL VALVE ANGLE STOPS WITH BRAIDED STAINLESS STEEL FLEX CONNECTORS AT HOT AND COLD WATER SUPPLY TO EACH FIXTURE EXCEPT SHOWERS AND BATHS. PROVIDE SCREWDRIVER STOPS AT SHOWERS AND BATHS.
6. FLUSH TRIGGER SHALL BE ON WIDE SIDE OF ROOM.
7. SHOWERS AND TUB-SHOWER COMBINATIONS SHALL BE PROVIDED WITH MIXING VALVES PER UPC SECTION 408.3.
8. PROVIDE LOCKABLE BOX.

DRAINS & CLEANOUTS SCHEDULE

PLAN MARK	FIXTURE TYPE	SERVICE SIZE - INCHES		LOCATION	FINISH	MANUFACTURER	BASIS OF DESIGN MODEL		NOTES
		W	V						
FD-1	FLOOR DRAIN	4	2	PER DWGS.	CAST IRON	JR SMITH	2010		1
FS-1	FLOOR SINK	4	2	PER DWGS.	N/A	JR SMITH	3140		1
HD-1	HUB DRAIN	2	1-1/2	PER DWGS.	STAINLESS	JR SMITH	9654		1
FCO	FLOOR CLEANOUT	PER PLANS	N/A	PER DWGS.	CAST IRON	WADE	6000		1
WCO	WALL CLEANOUT	PER PLANS	N/A	PER DWGS.	CAST IRON	WADE	8560		1

NOTES:

1. CONTRACTOR SHALL CONFIRM MAKE, MODEL, AND FINISH OF ALL FIXTURES WITH OWNER, ARCHITECT, AND INTERIOR DESIGNER PRIOR TO ORDERING.

EXPANSION TANK

EQUIP NO.	SERVICE	CAPACITY (GAL)	TANK SIZE		OPERATING WEIGHT (LBS)	BASIS OF DESIGN	NOTES
			DIAMETER (INCHES)	HEIGHT (INCHES)			
ET-1.2	HOT WATER	2	8	14	28.8	THERMXTROL ST-5C-DD	1.2

NOTES:

1. INSTALL IN ACCORDANCE WITH MANUFACTURER INSTRUCTIONS.
2. ALL DOMESTIC WATER EQUIPMENT SHALL BE NSF-61 LISTED.

PACKAGED BOOSTER PUMP

EQUIP NO.	SERVICE	TYPE	FLOW PER PUMP, GPM	TOTAL FLOW, GPM	SUCTION PRESSURE / DISCHARGE PRESSURE (PSI)	MOTOR HP (PER PUMP)	ELECTRICAL	WEIGHT, LBS	BASIS OF DESIGN	NOTES
BP-1	DOMESTIC WATER	DUPLEX	28.4	56.8	27 / 80	2	240V/1P	289	GRUNDFOS CMBE TWIN 10-54	1,2,3,4,5,6

NOTES:

1. SINGLE POINT CONNECTION.
2. PROVIDE ALL REQUIRED VALVES, PIPING, CONTROLS, ETC. FOR A COMPLETE SYSTEM.
3. PROVIDE VFD'S FOR EACH PUMP.
4. ALL CLEAR WATER PUMPS OVER 2 HORSEPOWER SHALL COMPLY WITH US DEPARTMENT OF ENERGY (DOE) PUMP EFFICIENCY REQUIREMENTS. APPLICABLE PUMPS SHALL BEAR A PUMP EFFICIENCY INDEX (PEI) LABEL.
5. INSTALL PER MANUFACTURER'S RECOMMENDATION AND STATE AND LOCAL AHJ REQUIREMENTS.
6. INSTALL WITH MANUFACTURER'S PROVIDED EXPANSION TANK.

ELECTRIC WATER HEATER

EQUIP NO.	SERVICE	GPH RECOVERY AT 100°F TR	STORAGE (GAL)	INLET/OUTLET CONNECTION	OPERATING WEIGHT (LBS)	ELECTRICAL		BASIS OF DESIGN	NOTES
						VOLTAGE	HEATER KW		
WH-1	LEVEL 1 HOT WATER	37	50	¾"	685	208V/1P	9	A.O. SMITH DRE-52-9	1,2
WH-2	LEVEL 2 HOT WATER	37	50	¾"	685	208V/1P	6	A.O. SMITH DRE-52-6	1,2

NOTES:

1. ELECTRICAL REQUIREMENTS ARE BASED ON NON-SIMULTANEOUS OPERATION.
2. FOR WATER HEATER PIPING DIAGRAM SEE DETAIL 1/P4.0.

HOT WATER CIRCULATION PUMP

EQUIP NO.	SERVICE	TYPE	FLOW, GPM	HEAD, FT	PUMP RPM	ELECTRICAL		WEIGHT, LBS	BASIS OF DESIGN	NOTES
						VOLTAGE	HP			
HWCP-1,2,3	DOMESTIC HOT WATER	INLINE	0.5	10	VARIABLE	208/1P	0.1	40	ECOCIRC 20-18	1,2

NOTES:

1. STAINLESS STEEL, SUITABLE FOR POTABLE WATER APPLICATION.
2. ALL DOMESTIC WATER EQUIPMENT SHALL BE NSF-61 LISTED.

TRAP PRIMER

EQUIP NO.	SERVICE	INLET/OUTLET CONNECTION	DIMENSIONS (D"x H")	BASIS OF DESIGN	NOTES
TP-1	FLOOR DRAINS	½" / ½"	1-1/4" x 4-3/8"	PRECISION PLUMBING PRODUCTS PR-500	1

NOTES:

1. OR APPROVED EQUIVALENT

City of Puyallup
Development & Permitting Services
ISSUED PERMIT
Building | Plumbing
Engineering | Public Works
Fire | Traffic

REVISIONS

NO.	DATE	DESCRIPTION
1.	7/9/25	PERMIT REVIEW COMMENTS

ROBISON ENGINEERING, INC
19401 40TH AVE W, SUITE 302
LYNNWOOD, WA 98036
206-364-3343 ITL

REED JACKSON
STATE OF WASHINGTON
REGISTERED
PROFESSIONAL ENGINEER
7/09/25

DRAWN:	DESIGNED:	CHECKED:	APPROVED:
JM	JM	RJ	RJ

PROJECT: EAST TOWN CROSSING - CLUBHOUSE
MULTIFAMILY DEVELOPMENT
PIONEER WAY & SHAW RD. PUYALLUP, WA

ROBISON ENGINEERING, INC
19401 40TH AVE W. SUITE 302
LYNNWOOD, WA 98036
PHONE:(206)364-3343

DATE: 7-09-2025

SHEET TITLE: PLUMBING SCHEDULES

SHEET NO. P0.03

PRCNC20250692

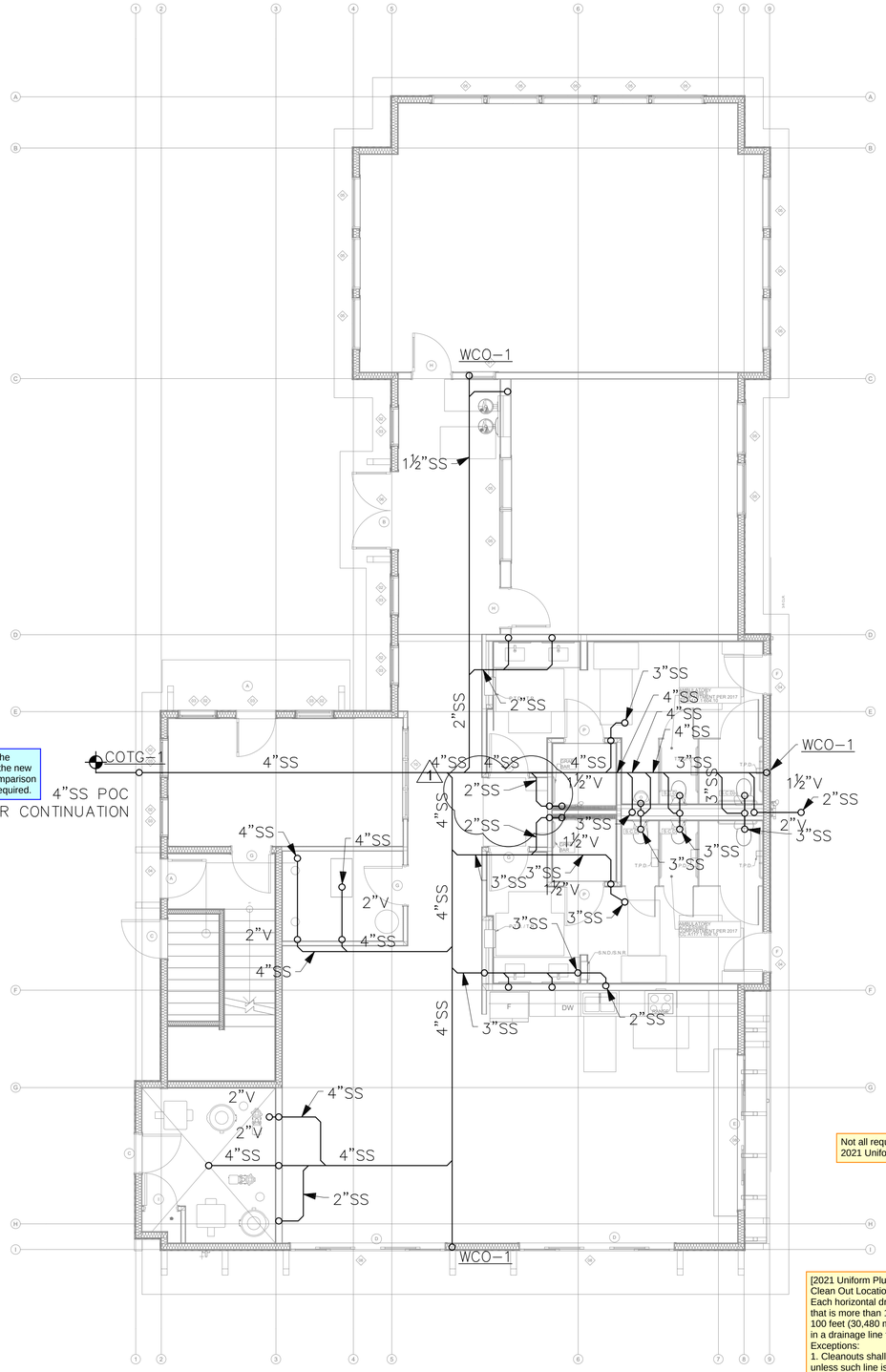

The contractor shall locate and verify the sanitary sewer and water services for the new building prior to beginning work. A comparison with the approved civil plans may be required.

GENERAL NOTES

1. PROVIDE TRAP PRIMERS FOR ALL FLOOR DRAINS AND HUB DRAINS PER 2021 UPC 1007.1.
2. WASTE & VENT SIZING: WASTE & VENT PIPING IS SIZED PER 2021 UPC TABLE 703.2. DRAINAGE PIPING SHALL BE SLOPED AT 1/4" PER FOOT OR 2% WHERE IT IS IMPRACTICAL TO OBTAIN A SLOPE OF 2% DUE TO THE DEPTH OF THE STREET SEWER OR TO STRUCTURAL FEATURES OF THE BUILDING, DRAINAGE PIPING MAY BE SLOPED AT 1/8" PER FOOT OR 1% WITH APPROVAL FROM THE AHJ.

PIPE SIZE	VERTICAL	HORIZONTAL	VENT
1½"	2 DFU	1 DFU	8 DFU
2"	16 DFU	8 DFU	24 DFU
3"	48 DFU	35 DFU	84 DFU
4"	256 DFU	172 DFU	256 DFU
6"	1,380 DFU	576 DFU	1,380 DFU
8"	3,600 DFU	2,112 DFU	3,600 DFU

FLAG NOTES

NOT USED

Not all required clean-outs are shown. Please see section 707.4 of the 2021 Uniform Plumbing Code (cited below) for required clean-out locations.

[2021 Uniform Plumbing Code, section 707.4]
Clean Out Locations
Each horizontal drainage pipe shall be provided with a cleanout at its upper terminal, and each run of piping, that is more than 100 feet (30,480 mm) in total developed length, shall be provided with a cleanout for each 100 feet (30,480 mm), or fraction thereof, in length of such piping. An additional cleanout shall be provided in a drainage line for each aggregate horizontal change of direction exceeding 135 degrees (2.36 rad).
Exceptions:
1. Cleanouts shall be permitted to be omitted on a horizontal drain line less than 5 feet (1,524 mm) in length unless such line is serving sinks or urinals.
2. Cleanouts shall be permitted to be omitted on a horizontal drainage pipe installed on a slope of 72 degrees (1.26 rad) or less from the vertical angle (one-fifth bend).
3. Except for the building drain, its horizontal branches, and urinals, a cleanout shall not be required on a pipe or piping that is above the floor level of the lowest floor of the building.
4. An approved type of two-way cleanout fitting, installed inside the building wall near the connection between the building drain and the building sewer or installed outside of a building at the lower end of a building drain and extended to grade, shall be permitted to be substituted for an upper terminal cleanout.

UNDERSLAB WASTE & VENT PLAN

SCALE: 3/16" = 1'–0"

City of Puyallup
Development & Permitting Services
ISSUED PERMIT

Building	Planning
Engineering	Public Works
Fire	Traffic

NO.	DATE	REVISIONS DESCRIPTION
1.	7/9/25	PERMIT REVIEW COMMENTS

ROBISON ENGINEERING, INC
19401 40TH AVE W, SUITE 302
LYNNWOOD, WA 98036
206-364-3343 ttl.

REED JACKSON
STATE OF WASHINGTON
REGISTERED
PROFESSIONAL ENGINEER
7/09/25

DRAWN: JM
DESIGNED: JM
CHECKED: RJ
APPROVED: RJ

PROJECT: **EAST TOWN CROSSING - CLUBHOUSE**
MULTIFAMILY DEVELOPMENT
PIONEER WAY & SHAW RD. PUYALLUP, WA

ROBISON ENGINEERING, INC
19401 40TH AVE W. SUITE 302
LYNNWOOD, WA 98036
PHONE:(206)3643343

DATE: 7-09-2025

SHEET TITLE: UNDERSLAB WASTE & VENT PLAN

SHEET NO. P2.00

PRCNC20250692

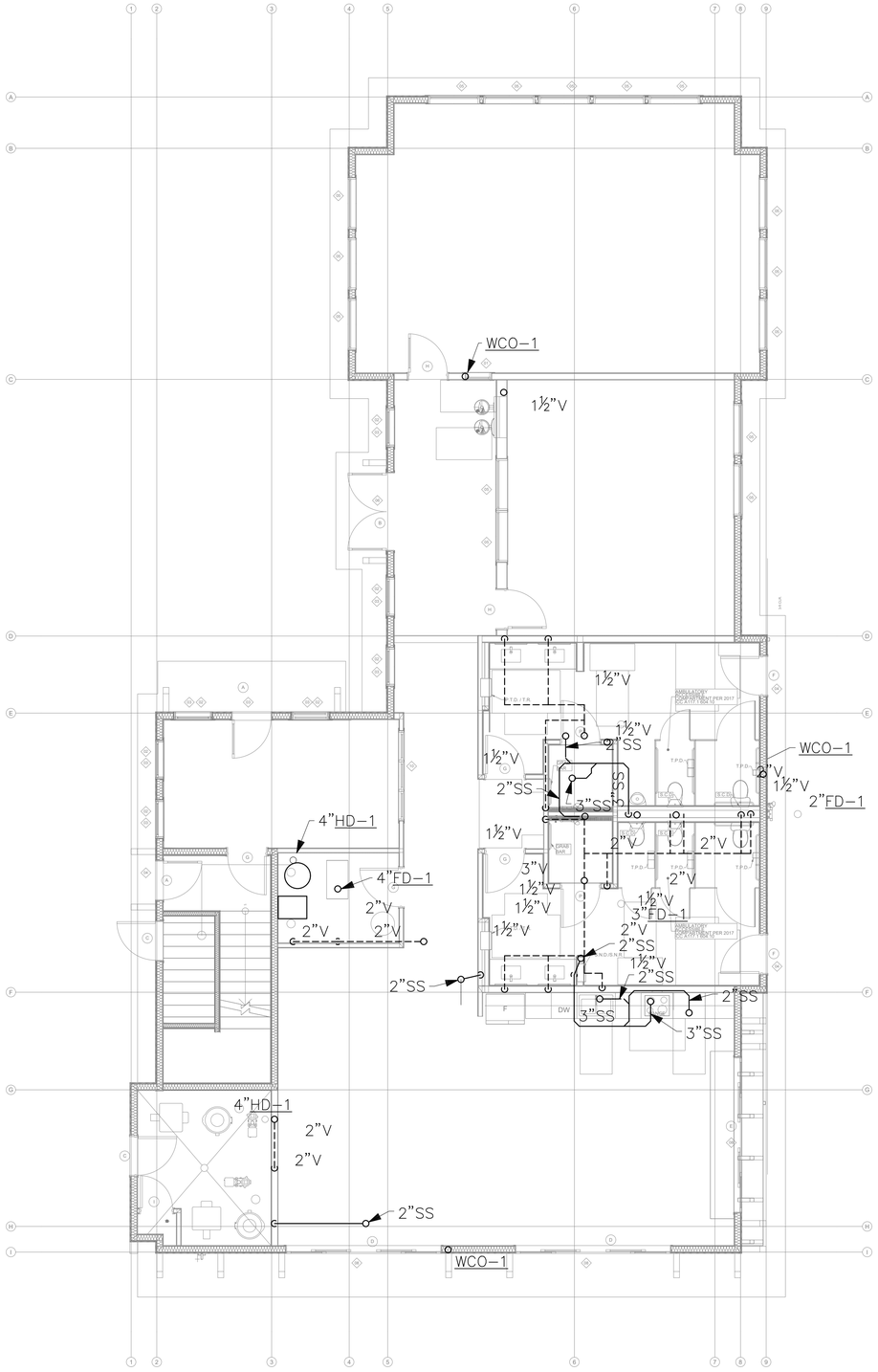

GENERAL NOTES

1. PROVIDE TRAP PRIMERS FOR ALL FLOOR DRAINS AND HUB DRAINS PER 2021 UPC 1007.1.
2. WASTE & VENT SIZING: WASTE & VENT PIPING IS SIZED PER 2021 UPC TABLE 703.2. DRAINAGE PIPING SHALL BE SLOPED AT 1/4" PER FOOT OR 2%. WHERE IT IS IMPRACTICAL TO OBTAIN A SLOPE OF 2% DUE TO THE DEPTH OF THE STREET SEWER OR TO STRUCTURAL FEATURES OF THE BUILDING, DRAINAGE PIPING MAY BE SLOPED AT 1/8" PER FOOT OR 1% WITH APPROVAL FROM THE AHJ.

PIPE SIZE	VERTICAL	HORIZONTAL	VENT
1½"	2 DFU	1 DFU	8 DFU
2"	16 DFU	8 DFU	24 DFU
3"	48 DFU	35 DFU	84 DFU
4"	256 DFU	172 DFU	256 DFU
6"	1,380 DFU	576 DFU	1,380 DFU
8"	3,600 DFU	2,112 DFU	3,600 DFU

FLAG NOTES

NOT USED

LEVEL 1 WASTE & VENT PLAN

SCALE: 3/16" = 1'–0"

NO.	DATE	REVISIONS DESCRIPTION
1.	7/9/25	PERMIT REVIEW COMMENTS

ROBISON ENGINEERING, INC
19401 40TH AVE W, SUITE 302
LYNNWOOD, WA 98036
206-364-3343 ttl.

REED JACKSON
STATE OF WASHINGTON
REGISTERED
PROFESSIONAL ENGINEER
7/09/25

DRAWN: JM
DESIGNED: JM
CHECKED: RJ
APPROVED: RJ

PROJECT: **EAST TOWN CROSSING - CLUBHOUSE**
MULTIFAMILY DEVELOPMENT
PIONEER WAY & SHAW RD. PUYALLUP, WA

ROBISON ENGINEERING, INC
19401 40TH AVE W. SUITE 302
LYNNWOOD, WA 98036
PHONE:(206)3643343

DATE: 7-09-2025

SHEET TITLE: LEVEL 1 WASTE & VENT PLAN

SHEET NO. P2.01

City of Puyallup
Development & Permitting Services
ISSUED PERMIT
Building | Planning
Engineering | Public Works
Fire | Traffic

PRCNC20250692

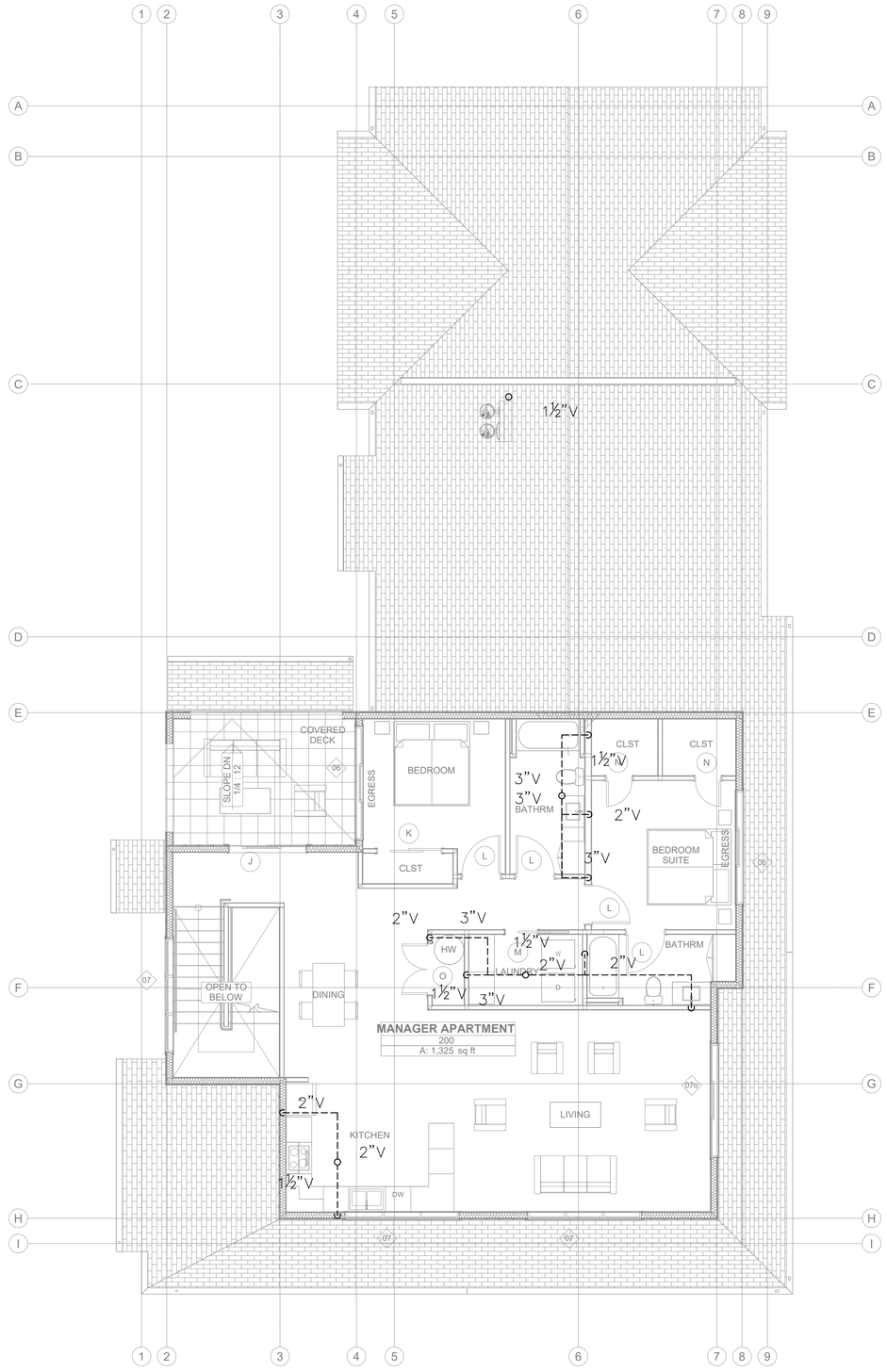

GENERAL NOTES

1. PROVIDE TRAP PRIMERS FOR ALL FLOOR DRAINS AND HUB DRAINS PER 2021 UPC 1007.1.
2. WASTE & VENT SIZING: WASTE & VENT PIPING IS SIZED PER 2021 UPC TABLE 703.2. DRAINAGE PIPING SHALL BE SLOPED AT 1/4" PER FOOT OR 2% WHERE IT IS IMPRACTICAL TO OBTAIN A SLOPE OF 2% DUE TO THE DEPTH OF THE STREET SEWER OR TO STRUCTURAL FEATURES OF THE BUILDING, DRAINAGE PIPING MAY BE SLOPED AT 1/8" PER FOOT OR 1% WITH APPROVAL FROM THE AHJ.

PIPE SIZE	VERTICAL	HORIZONTAL	VENT
1½"	2 DFU	1 DFU	8 DFU
2"	16 DFU	8 DFU	24 DFU
3"	48 DFU	35 DFU	84 DFU
4"	256 DFU	172 DFU	256 DFU
6"	1,380 DFU	576 DFU	1,380 DFU
8"	3,600 DFU	2,112 DFU	3,600 DFU

FLAG NOTES #

NOT USED

1

LEVEL 2 WASTE & VENT PLAN

SCALE: 3/16" = 1'-0"

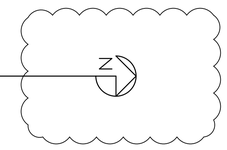

City of Puyallup
Development & Permitting Services
ISSUED PERMIT
Building | Planning
Engineering | Public Works
Fire | Traffic

NO.	DATE	REVISIONS DESCRIPTION
1.	7/9/25	PERMIT REVIEW COMMENTS

ROBISON ENGINEERING, INC
19401 40TH AVE W, SUITE 302
LYNNWOOD, WA 98036
206-364-3343 ttl.

REED JACKSON
STATE OF WASHINGTON
REGISTERED
PROFESSIONAL ENGINEER
7/09/25

DRAWN: JM
DESIGNED: JM
CHECKED: RJ
APPROVED: RJ

PROJECT: **EAST TOWN CROSSING - CLUBHOUSE**
MULTIFAMILY DEVELOPMENT
PIONEER WAY & SHAW RD. PUYALLUP, WA

ROBISON ENGINEERING, INC
19401 40TH AVE W. SUITE 302
LYNNWOOD, WA 98036
PHONE:(206)364-3343

DATE:
7-09-2025

SHEET TITLE:
LEVEL 2
WASTE & VENT
PLAN

SHEET NO.
P2.02

PRCNC20250692

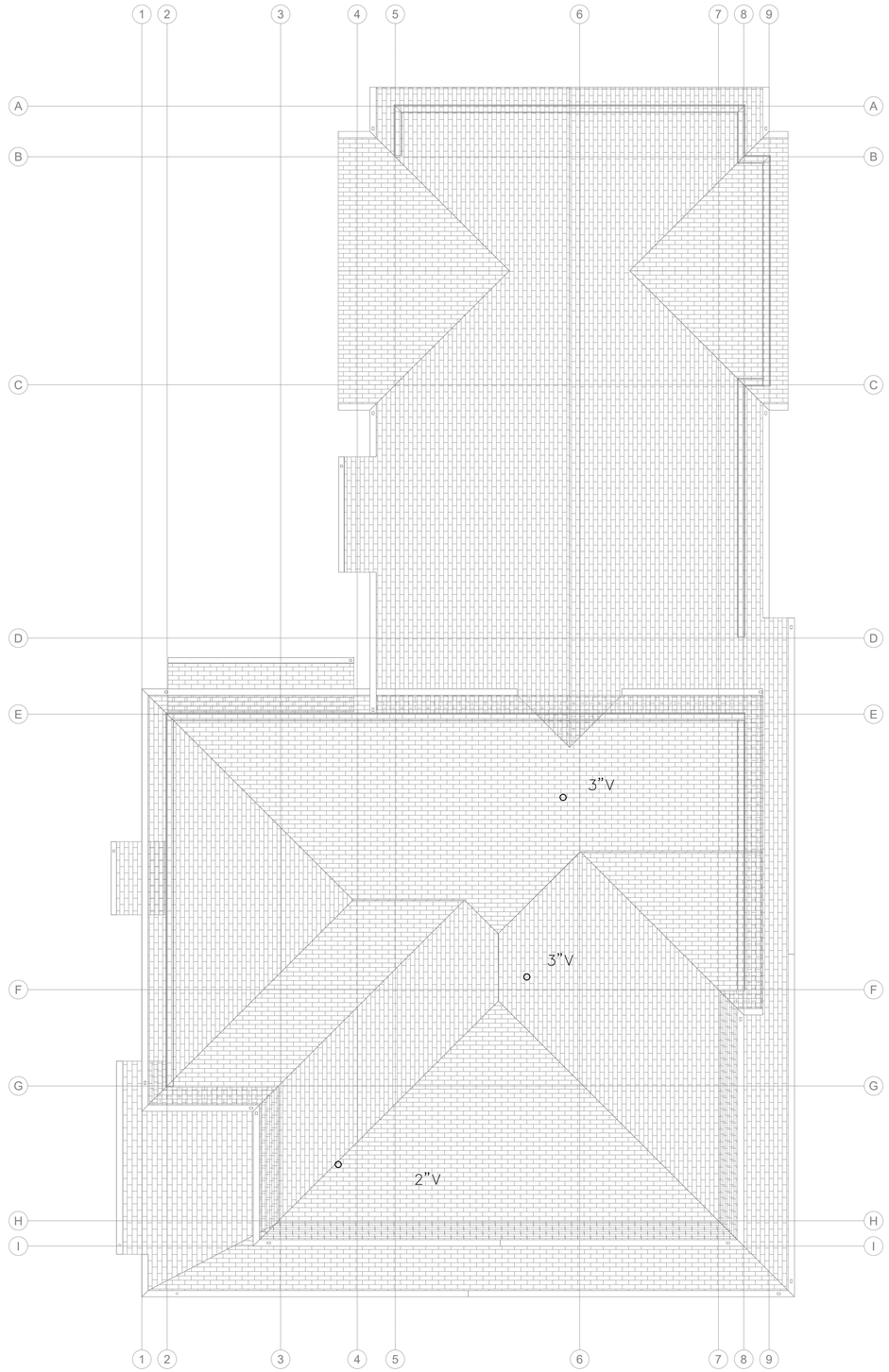

GENERAL NOTES

1. PROVIDE TRAP PRIMERS FOR ALL FLOOR DRAINS AND HUB DRAINS PER 2021 UPC 1007.1.
2. WASTE & VENT SIZING: WASTE & VENT PIPING IS SIZED PER 2021 UPC TABLE 703.2. DRAINAGE PIPING SHALL BE SLOPED AT 1/4" PER FOOT OR 2% WHERE IT IS IMPRACTICAL TO OBTAIN A SLOPE OF 2% DUE TO THE DEPTH OF THE STREET SEWER OR TO STRUCTURAL FEATURES OF THE BUILDING, DRAINAGE PIPING MAY BE SLOPED AT 1/8" PER FOOT OR 1% WITH APPROVAL FROM THE AHJ.

PIPE SIZE	VERTICAL	HORIZONTAL	VENT
1½"	2 DFU	1 DFU	8 DFU
2"	16 DFU	8 DFU	24 DFU
3"	48 DFU	35 DFU	84 DFU
4"	256 DFU	172 DFU	256 DFU
6"	1,380 DFU	576 DFU	1,380 DFU
8"	3,600 DFU	2,112 DFU	3,600 DFU

FLAG NOTES

NOT USED

1

ROOF WASTE & VENT PLAN

SCALE: 3/16" = 1'-0"

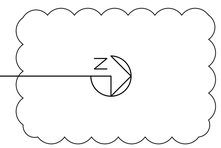

City of Puyallup
Development & Permitting Services
ISSUED PERMIT
Building | Planning
Engineering | Public Works
Fire | Traffic

NO.	DATE	REVISIONS DESCRIPTION
1.	7/9/25	PERMIT REVIEW COMMENTS

ROBISON ENGINEERING, INC
19401 40TH AVE W, SUITE 302
LYNNWOOD, WA 98036
206-364-3343 ttl.

REED JACKSON
STATE OF WASHINGTON
REGISTERED
PROFESSIONAL ENGINEER
7/09/25

DRAWN:	JM
DESIGNED:	JM
CHECKED:	RJ
APPROVED:	RJ

PROJECT: **EAST TOWN CROSSING - CLUBHOUSE**
MULTIFAMILY DEVELOPMENT
PIONEER WAY & SHAW RD. PUYALLUP, WA

ROBISON ENGINEERING, INC
19401 40TH AVE W, SUITE 302
LYNNWOOD, WA 98036
PHONE:(206)3643343

DATE:
7-09-2025

SHEET TITLE:
ROOF
WASTE & VENT
PLAN

SHEET NO.
P2.03

PRCNC20250692

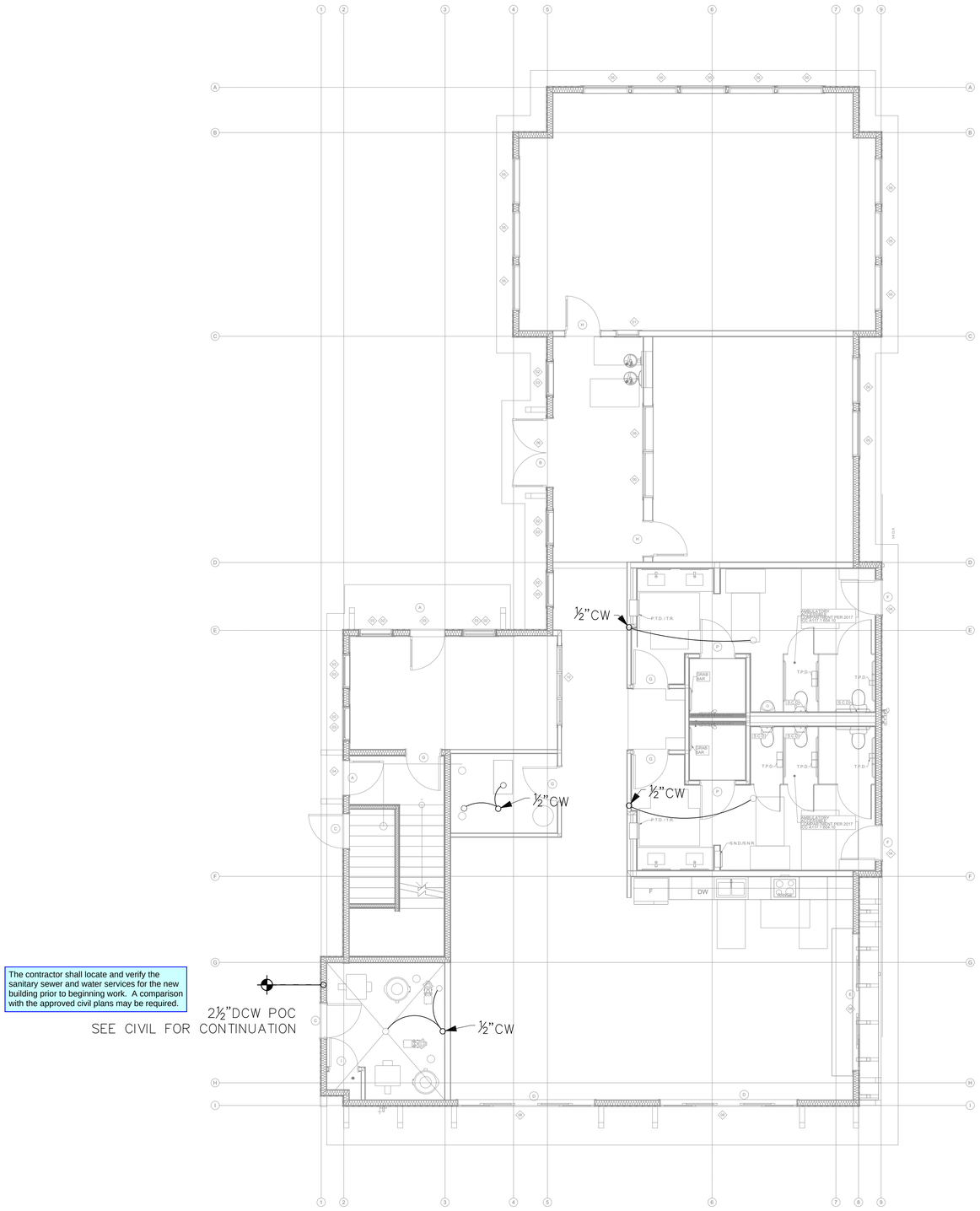

The contractor shall locate and verify the sanitary sewer and water services for the new building prior to beginning work. A comparison with the approved civil plans may be required.

GENERAL NOTES

1. PROVIDE TRAP PRIMERS FOR ALL FLOOR DRAINS AND HUB DRAINS PER 2021 UPC 1007.1.
2. PROVIDE EXPANSION LOOPS FOR ALL SUPPLY PIPING AND INSTALL PER MANUFACTURES RECOMMENDATIONS.

FLAG NOTES 1

NOT USED

1

UNDERSLAB SUPPLY PLAN

SCALE: 3/16" = 1'-0"

City of Puyallup
Development & Permitting Services
ISSUED PERMIT

Building	Planning
Engineering	Public Works
Fire	Traffic

NO.	DATE	REVISIONS DESCRIPTION
1.	7/9/25	PERMIT REVIEW COMMENTS

ROBISON ENGINEERING, INC
19401 40TH AVE W., SUITE 302
LYNNWOOD, WA 98036
206-364-3343 TEL

REED JACKSON
STATE OF WASHINGTON
REGISTERED
PROFESSIONAL ENGINEER
7/09/25

DRAWN:	JM
DESIGNED:	JM
CHECKED:	RJ
APPROVED:	RJ

PROJECT: **EAST TOWN CROSSING - CLUBHOUSE**
MULTIFAMILY DEVELOPMENT
PIONEER WAY & SHAW RD. PUYALLUP, WA

ROBISON ENGINEERING, INC
19401 40TH AVE W. SUITE 302
LYNNWOOD, WA 98036
PHONE:(206)3643343

DATE:
7-09-2025

SHEET TITLE:
UNDERSLAB SUPPLY PLAN

SHEET NO.
P3.00

PRCNC20250692

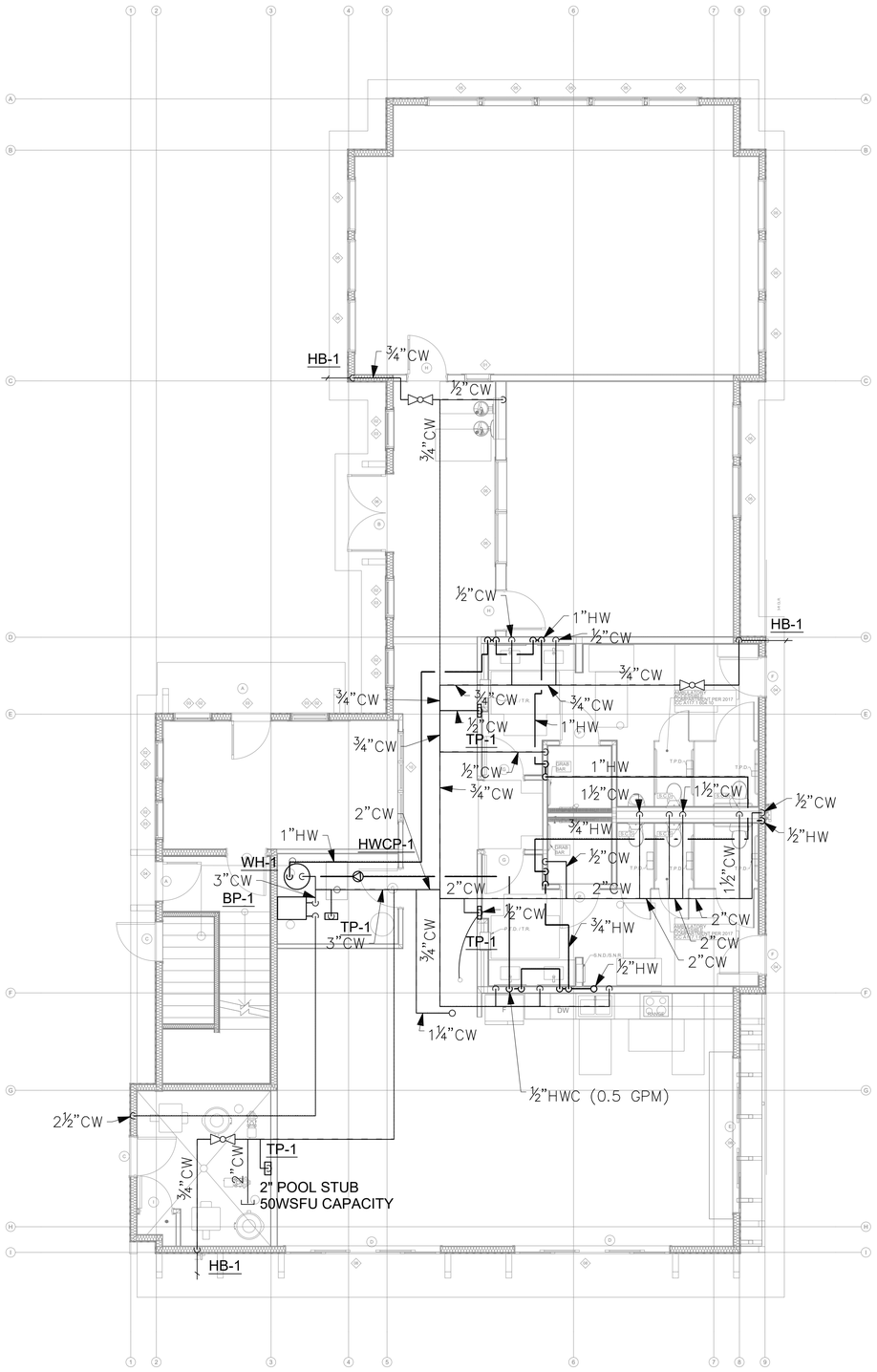

GENERAL NOTES

1. PROVIDE TRAP PRIMERS FOR ALL FLOOR DRAINS AND HUB DRAINS PER 2021 UPC 1007.1.
2. PROVIDE EXPANSION LOOPS FOR ALL SUPPLY PIPING AND INSTALL PER MANUFACTURES RECOMMENDATIONS.

FLAG NOTES

NOT USED

LEVEL 1 SUPPLY PLAN

SCALE: 3/16" = 1'-0"

City of Puyallup
Development & Permitting Services
ISSUED PERMIT
Building | Planning
Engineering | Public Works
Fire | Traffic

REVISIONS

NO.	DATE	DESCRIPTION
1.	7/9/25	PERMIT REVIEW COMMENTS

ROBISON ENGINEERING, INC
19401 40TH AVE W., SUITE 302
LYNNWOOD, WA 98036
206-364-3343 TEL

REED JACKSON
STATE OF WASHINGTON
REGISTERED
PROFESSIONAL ENGINEER
7/09/25

DRAWN: JM
DESIGNED: JM
CHECKED: RJ
APPROVED: RJ

PROJECT: **EAST TOWN CROSSING - CLUBHOUSE**
MULTIFAMILY DEVELOPMENT
PIONEER WAY & SHAW RD. PUYALLUP, WA

ROBISON ENGINEERING, INC
19401 40TH AVE W. SUITE 302
LYNNWOOD, WA 98036
PHONE:(206)3643343

DATE:
7-09-2025

SHEET TITLE:
UNDERSLAB
SUPPLY PLAN

SHEET NO.
P3.01

PRCNC20250692

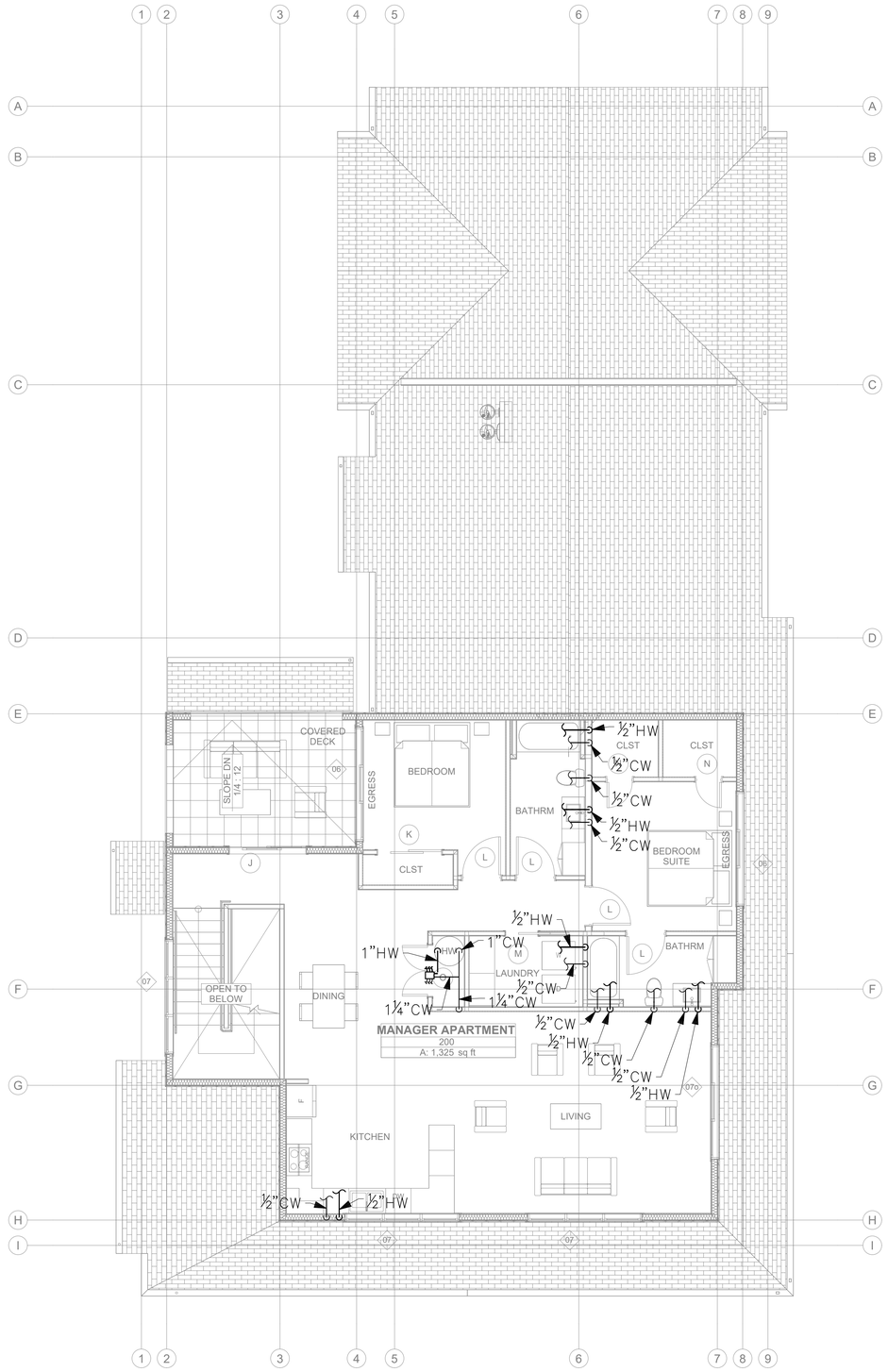

GENERAL NOTES

1. PROVIDE TRAP PRIMERS FOR ALL FLOOR DRAINS AND HUB DRAINS PER 2021 UPC 1007.1.
2. PROVIDE EXPANSION LOOPS FOR ALL SUPPLY PIPING AND INSTALL PER MANUFACTURES RECOMMENDATIONS.

FLAG NOTES

NOT USED

LEVEL 2 SUPPLY PLAN

SCALE: 3/16" = 1'-0"

City of Puyallup
Development & Permitting Services
ISSUED PERMIT
Building | Planning
Engineering | Public Works
Fire | Traffic

REVISIONS		
NO.	DATE	DESCRIPTION
1.	7/9/25	PERMIT REVIEW COMMENTS

ROBISON ENGINEERING, INC
19401 40TH AVE W., SUITE 302
LYNNWOOD, WA 98036
206-364-3343 TEL

REED JACKSON
STATE OF WASHINGTON
REGISTERED
PROFESSIONAL ENGINEER
7/09/25

DRAWN:	JM
DESIGNED:	JM
CHECKED:	RJ
APPROVED:	RJ

PROJECT: **EAST TOWN CROSSING - CLUBHOUSE**
MULTIFAMILY DEVELOPMENT
PIONEER WAY & SHAW RD. PUYALLUP, WA

ROBISON ENGINEERING, INC
19401 40TH AVE W. SUITE 302
LYNNWOOD, WA 98036
PHONE:(206)3643343

DATE:
7-09-2025

SHEET TITLE:
UNDERSLAB
SUPPLY PLAN

SHEET NO.
P3.02

PRCNC20250692

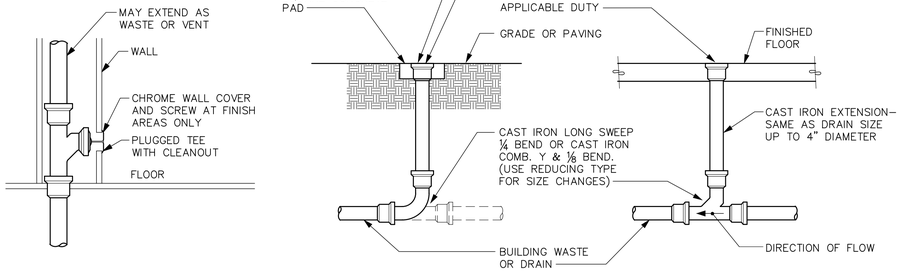

INTERIOR WALL CLEANOUT (WCO)

EXTERIOR CLEANOUT TO GRADE (COTG)
(LIGHT TRAFFIC AREA)

INTERIOR FLOOR CLEANOUT (FCO)

CLEANOUTS

DETAIL

SCALE: NONE

6
P4.00

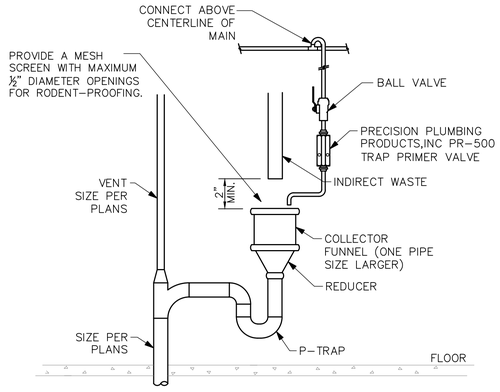

HUB DRAIN

DETAIL

SCALE: NONE

5
P4.00

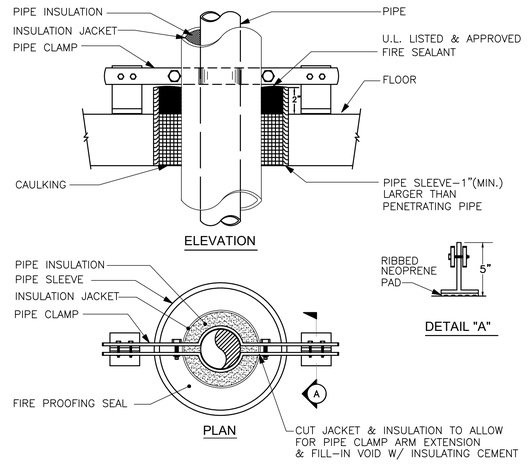

RISER PIPE SUPPORT

DETAIL

SCALE: NONE

4
P4.00

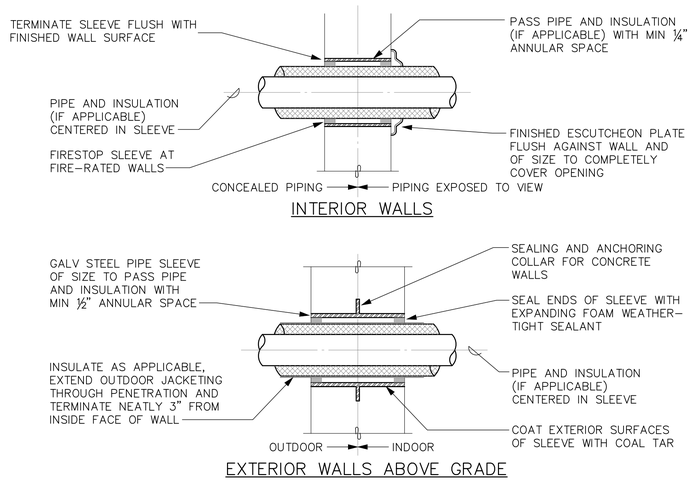

PIPE SLEEVES THROUGH WALLS

DETAIL

SCALE: NONE

3
P4.00

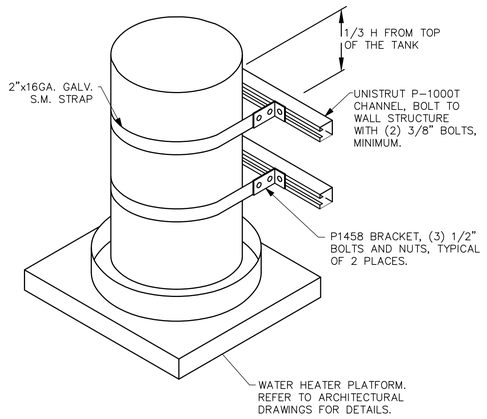

WATER HEATER SEISMIC STRAPPING

DETAIL

SCALE: NONE

2
P4.00

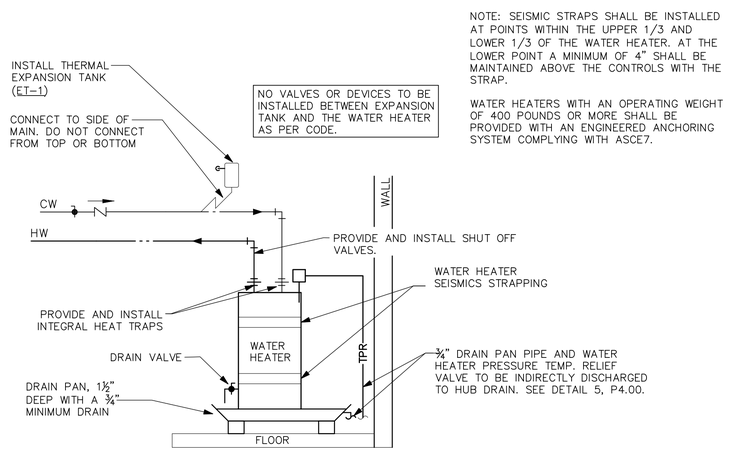

TYPICAL UNIT WATER HEATER

DETAIL

SCALE: NONE

1
P4.00

City of Puyallup
Development & Permitting Services
ISSUED PERMIT
Building | Planning
Engineering | Public Works
Fire | Traffic

REVISIONS		
NO.	DATE	DESCRIPTION
1.	7/9/25	PERMIT REVIEW COMMENTS

ROBISON ENGINEERING, INC
19401 40TH AVE W., SUITE 302
LYNNWOOD, WA 98036
206-364-3343 TEL.

REED JACKSON
STATE OF WASHINGTON
REGISTERED
PROFESSIONAL ENGINEER
7/09/25

DRAWN:	DESIGNED:	CHECKED:	APPROVED:
JM	JM	RJ	RJ

PROJECT:
EAST TOWN CROSSING - CLUBHOUSE
MULTIFAMILY DEVELOPMENT
PIONEER WAY & SHAW RD. PUYALLUP, WA

ROBISON ENGINEERING, INC
19401 40TH AVE W. SUITE 302
LYNNWOOD, WA 98036
PHONE:(206)364.3343

DATE:
7-09-2025

SHEET TITLE:
DETAILS

SHEET NO.
P4.00

PRCNC20250692

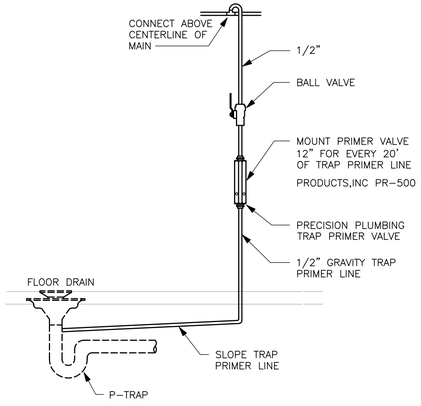

TRAP PRIMER

DETAIL

SCALE: NONE

6
P4.01

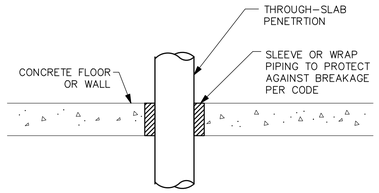

PIPE SLAB PENETRATION

DETAIL

SCALE: NONE

5
P4.01

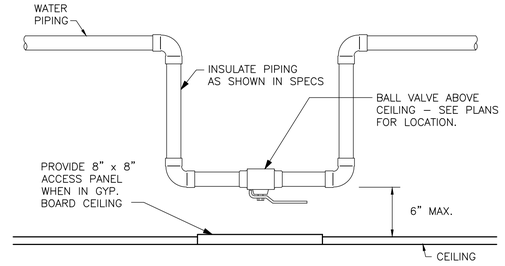

TYPICAL VALVE PLACEMENT

DETAIL

SCALE: NONE

4
P4.01

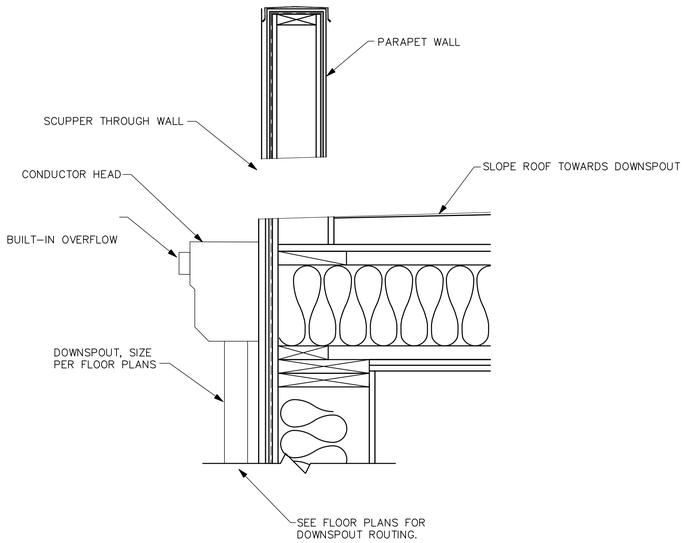

VENT TERMINATION

DETAIL

SCALE: NONE

3
P4.01

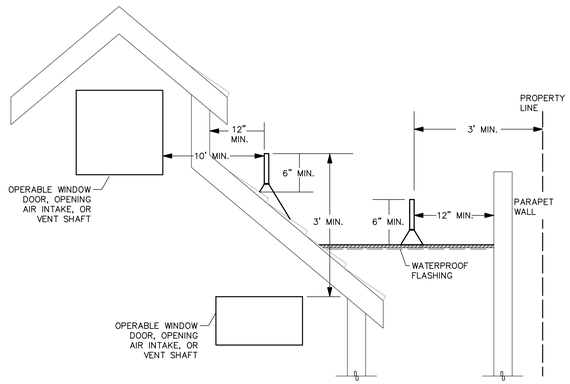

VENT TERMINATION

DETAIL

SCALE: NONE

2
P4.01

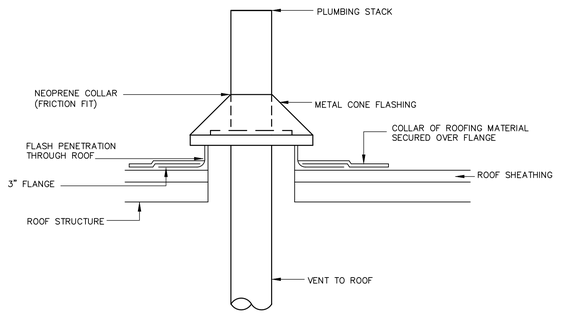

VENT THROUGH ROOF

DETAIL

SCALE: NONE

1
P4.01

City of Puyallup
Development & Permitting Services
ISSUED PERMIT
Building | Planning
Engineering | Public Works
Fire | Traffic

REVISIONS		
NO.	DATE	DESCRIPTION
1.	7/9/25	PERMIT REVIEW COMMENTS

ROBISON ENGINEERING, INC
19401 40TH AVE W, SUITE 302
LYNNWOOD, WA 98036
206-364-3343 TEL

REED JACKSON
STATE OF WASHINGTON
REGISTERED
PROFESSIONAL ENGINEER
7/09/25

DRAWN:	DESIGNED:	CHECKED:	APPROVED:
JM	JM	RJ	RJ

PROJECT:
EAST TOWN CROSSING - CLUBHOUSE
MULTIFAMILY DEVELOPMENT
PIONEER WAY & SHAW RD. PUYALLUP, WA

ROBISON ENGINEERING, INC
19401 40TH AVE W, SUITE 302
LYNNWOOD, WA 98036
PHONE:(206)364-3343

DATE:
7-09-2025

SHEET TITLE:
DETAILS

SHEET NO.
P4.01

PRCNC20250692

REVISIONS		
NO.	DATE	DESCRIPTION
1.	7/9/25	PERMIT REVIEW COMMENTS

1 ADDED DETAILS

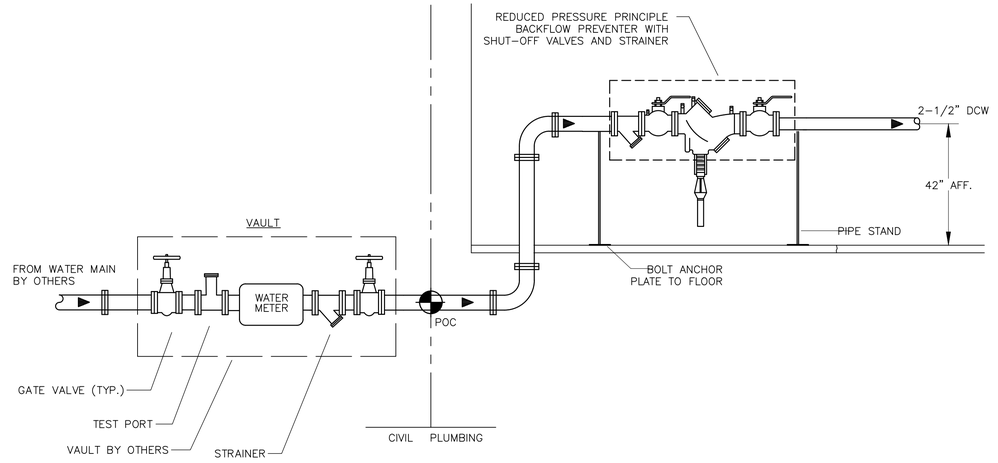

WATER SERVICE ENTRANCE

DETAIL

SCALE: NONE

4 P4.02

1. FLOOR DRAIN–PITCH FLOOR TOWARDS DRAIN
2. P–TRAP
3. PIPE TO SEWER–PITCH AND VENT PER CODE

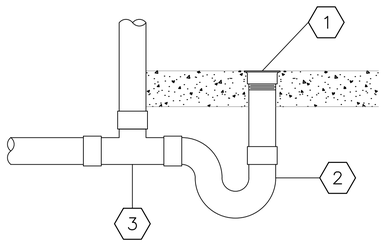

FLOOR DRAIN

DETAIL

SCALE: NONE

3 P4.02

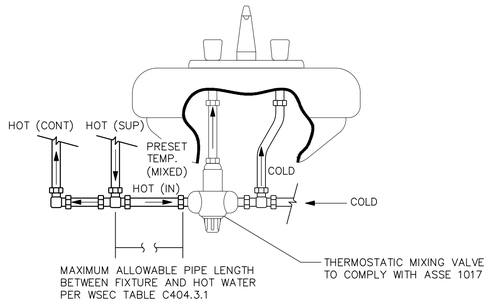

THERMOSTATIC MIXING VALVE

DETAIL

SCALE: NONE

2 P4.02

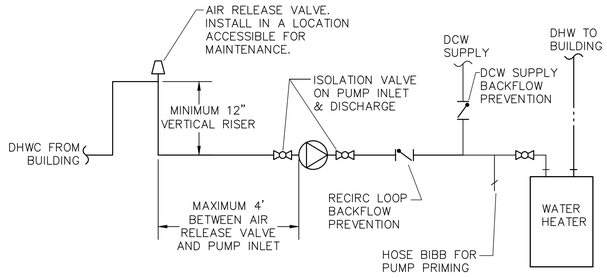

HORIZONTAL RECIRC PUMP INSTALLATION

DETAIL

SCALE: NONE

1 P4.02

City of Puyallup
City of Puyallup Development & Permitting Services
ISSUED PERMIT
Building | Planning
Engineering | Public Works
Fire | Traffic

ROBISON ENGINEERING, INC
19401 40TH AVE W, SUITE 302
LYNNWOOD, WA 98036
206-364-3343 TEL

REED JACKSON
STATE OF WASHINGTON
REGISTERED
PROFESSIONAL ENGINEER
7/09/25

DRAWN:	DESIGNED:	CHECKED:	APPROVED:
JM	JM	RJ	RJ

PROJECT: **EAST TOWN CROSSING - CLUBHOUSE**
MULTIFAMILY DEVELOPMENT
PIONEER WAY & SHAW RD. PUYALLUP, WA

ROBISON ENGINEERING, INC
19401 40TH AVE W, SUITE 302
LYNNWOOD, WA 98036
PHONE:(206)364-3343

DATE: 7-09-2025

SHEET TITLE: DETAILS

SHEET NO. P4.02

SYMBOLS

GENERAL

LIGHT LINE INDICATES NON–ELECTRICAL OR BACKGROUND (THIS IS NOT CONTRACTUAL DEFINITION OF WORK)

HEAVY LINE INDICATES NEW WORK (THIS IS NOT CONTRACTUAL DEFINITION OF WORK)

DETAIL IDENTIFICATION

SYMBOL	NAME
1	FLAG NOTE
△	REVISION NOTE
	REVISION DEFINITION, AREA ENCIRCLED CONTAINS DRAWING CHANGES MADE SUBSEQUENT TO PREVIOUS ISSUE

LIGHTING

L10 , A 2–32	FIXTURE IDENTIFICATION SYMBOL (TYPE A, (2) 32 WATT LAMPS SHOWN) SEE SCHEDULE SEE LUMINAIRE SCHEDULE FOR FIXTURE SYMBOLS

SWITCHES

S_0	SWITCH, SINGLE POLE; WITH SWITCHING SUBSCRIPT
S_{OS}	OCCUPANCY SENSOR SWITCH, PROXIMITY INFRARED
S_D	SWITCH, SINGLE POLE; WITH SWITCHING SUBSCRIPT "D" INDICATES WALLBOX DIMMER
$(S)_{OS}$	CEILING MOUNTED OCCUPANCY SENSOR
$(S)_{AL}$	CEILING MOUNTED AMBIENT LIGHT SENSOR
$(S)_{DT}$	WALL MOUNTED DUAL TECHNOLOGY OCCUPANT SENSOR
S_T	SWITCH, TIMER.
S_2	SWITCH, TWO POLE.

RECEPTACLES

	SINGLE RECEPTACLE
	DUPLEX RECEPTACLE: WALL MOUNTED, +18" AFF
$_{CA}$	CONTROLLED AND NON CONTROLLED DUPLEX RECEPTACLE (SPLIT WIRED RECEPTACLE)
	DUPLEX RECEPTACLE – ABOVE COUNTER
GFCI	DUPLEX GFCI ABOVE COUNTER
GFCI	DUPLEX GFCI
+42"	DUPLEX RECEPTACLE, WITH HEIGHT ABOVE FINISHED FLOOR INDICATED
	CEILING MOUNTED DUPLEX RECEPTACLE
	DOUBLE DUPLEX RECEPTACLE: WALL MOUNTED, +18" AFF
	FLOOR BOX ONE DUPLEX RECEPTACLE
	FLOOR BOX ONE DUPLEX RECEPTACLE + ONE DATA
	FLOOR BOX ONE DUPLEX RECEPTACLE + ONE DATA + ONE VOICE
	SPECIAL PURPOSE RECEPTACLE, AS NOTED

MISCELLANEOUS

J	JUNCTION BOX: 4SQ MOUNTED JUNCTION BOX: 4SQ WALL MOUNTED JUNCTION BOX: 4SQ TRACK
L	CONNECTION FOR LIGHTED MIRROR COORDINATE LOCATION AND ELEVATION WITH ARCHITECT PRIOR TO ROUGH–IN
T	THERMOSTAT

SIGNAL/COMMUNICATION

▽	DATA OUTLET: WALL MOUNTED @ +18" AFF U.O.N.
▼	TELEPHONE/DATA OUTLET: WALL MOUNTED @ +18" AFF U.O.N.
TV	TELEVISION OUTLET: WALL MOUNTED @ +18" AFF U.O.N.

POWER

	PANELBOARD
WP	NON–FUSED DISCONNECT SWITCH (WP = NEMA 3R WHERE APPROPRIATE)
	FUSED DISCONNECT SWITCH
MAU–1,5HP,480,3	MOTOR CONNECTION (EQUIPMENT NAME, HORSEPOWER, VOLTAGE, AND PHASE INDICATED)
EF–1,12KVA,208,1	EQUIPMENT CONNECTION (EQUIPMENT NAME, LOAD, VOLTAGE, AND PHASE INDICATED)
T	TRANSFORMER, DRY TYPE, SHOWN TO SCALE
M	KW METER AND BASE

PART OF THE DESIGN/BUILD FIRE ALARM SYSTEM

FACP	FIRE ALARM SYSTEM CONTROL PANEL
P	FIRE ALARM SYSTEM PULL STATION
	FIRE ALARM SYSTEM STROBE/SPEAKER
SD	FIRE ALARM PHOTOELECTRIC SMOKE DETECTOR AND SPEAKER.
	FIRE ALARM COMBINATION PHOTOELECTRIC SMOKE DETECTOR, CARBON MONOXIDE DETECTOR, AND SPEAKER, GUESTROOM.
CO	CARBON MONOXIDE DETECTOR.
	ELECTRO–MAGNETIC DOOR HOLDER
DSD	DUCT SMOKE DETECTOR

ABBREVIATIONS

A	AMPERE
AC	ALTERNATING CURRENT, ABOVE COUNTER
AFF	ABOVE FINISHED FLOOR
AIC	AMPS INTERRUPTING CAPACITY
AL	ALUMINUM
AMP	AMPERE
AWG	AMERICAN WIRE GAUGE
BKR	BREAKER
BLDG	BUILDING
C	COIL or CONDUIT
CKT	CIRCUIT
CO	CONDUIT/RACEWAY ONLY
CT	CURRENT TRANSFORMER
Cu	COPPER
CW	COOL WHITE
D	DIMMER
DED	DEDICATED
EC	ELECTRICAL CONTRACTOR
EF	EXHAUST FAN
ELEC	ELECTRICAL
EMT	ELECTRICAL METALLIC TUBING
EQUIP	EQUIPMENT
EXIST	EXISTING
FAA	FIRE ALARM ANNUNCIATOR
FACP	FIRE ALARM CONTROL PANEL
FLUOR	FLUORESCENT
GC	GENERAL CONRACTOR
GFCI	GROUND FAULT CIRCUIT INTERRUPTER
GND	GROUND
GRS	GALVANIZED RIGID STEEL
HID	HIGH INTENSITY DISCHARGE
HP	HORSEPOWER
IG	ISOLATED GROUND
KCMIL	THOUSAND CIRCULAR MILLS
KVA	KILOVOLT AMPERES
KW	KILOWATT
LTG	LIGHTING
LV	LOW VOLTAGE
MFR	MANUFACTURER
MIN	MINIMUM
MLO	MAIN LUGS ONLY
N	NEUTRAL
NEC	NATIONAL ELECTRICAL CODE (NFPA–70)
NEMA	NATIONAL ELECTRICAL MANUFACTURERS ASSOCIATION
NTS	NOT TO SCALE
PNL	PANEL
POC	POINT OF CONNECTION
PT	POTENTIAL TRANSFORMER
PVC	POLYVINYL CLORIDE
PWR	POWER
QTY	QUANTITY
RECEPT	RECEPTACLE
REF	REFERENCE
RI	ROUGH–IN
RM	ROOM
RO	RACEWAY ONLY
SHT	SHEET
SPEC	SPECIFICATIONS
SW	SWITCH
SWBD	SWITCHBOARD
SWGR	SWITCHGEAR
TYP	TYPICAL
UG	UNDERGROUND
UL	UNDERWRITERS LABORATORIES
UON	UNLESS OTHERWISE NOTED
V	VOLTS
W	WATTS
WW	WARM WHITE
WP	WEATHERPROOF
W/	WITH
W/O	WITHOUT
XFMR	TRANSFORMER
XFR	TRANSFER
Z	IMPEDANCE OR ZONE

GENERAL NOTES

PRCNC20250692

GENERAL

1. PROVIDE ELECTRICAL INSTALLATION IN ACCORDANCE WITH THE GOVERNING ELECTRICAL CODE, LOCAL CODES, ORDINANCES AND REQUIREMENTS OF UTILITY COMPANIES FURNISHING SERVICES TO INSTALLATION.
2. PROVIDE ALL WORK AND ITEMS NECESSARY FOR COMPLETE AND FUNCTIONAL ELECTRICAL SYSTEMS. THE ELECTRICAL DRAWINGS ARE DIAGRAMMATIC AND DO NOT NECESSARILY SHOW EVERY CONDUIT, BOX, CONDUCTOR OR SIMILAR ITEMS FOR A COMPLETE INSTALLATION.
3. THE CONTRACTOR SHALL VISIT THE SITE PRIOR TO BID AND DETERMINE CONDITIONS WHICH MAY AFFECT BID. ANY ITEMS NOT FULLY UNDERSTOOD SHALL BE BROUGHT TO THE ATTENTION OF THE ARCHITECT PRIOR TO BIDDING.
4. "REF" INDICATIONS DENOTE WORK COVERED ELSEWHERE (ARCHITECTURAL, STRUCTURAL, OR MECHANICAL).
5. REFERENCE ARCHITECTURAL DRAWING FOR EXACT LOCATION OF DEVICES. QUESTIONS CONCERNING THE LOCATION OF DEVICES AND EQUIPMENT SHALL BE DIRECTED TO THE ARCHITECT. FAILURE TO COORDINATE REQUIREMENTS SHALL IN NO WAY RESULT IN ADDITIONAL COMPENSATION BEING PROVIDED TO THE CONTRACTOR.
6. WHEREVER THE WORD "PROVIDE" IS USED, IT MEANS, "FURNISH AND INSTALL COMPLETE AND READY FOR USE."
7. COORDINATE LOCATION OF ELECTRICAL WITH OTHER TRADES.
8. REFER TO EQUIPMENT DRAWINGS FOR MECHANICAL CHARACTERISTICS (SIZE, LOCATION, ETC.) OF MECHANICAL EQUIPMENT, UNLESS OTHERWISE INDICATED. COORDINATE INSTALLATION AND LOCATION OF ALL EQUIPMENT WITH MECHANICAL CONTRACTOR. VERIFY ALL FUSE RATINGS, WIRE SIZES AND DISCONNECT SIZES PRIOR TO INSTALLATION.

MATERIALS AND METHODS

1. PROVIDE RACEWAY AND WIRING ROUTED CONCEALED WITHIN BUILDING STRUCTURE WHERE POSSIBLE. WHERE RACEWAY CANNOT BE CONCEALED, IT SHALL BE INSTALLED PER PROJECT MANAGER'S DIRECTION. ALL CONDUIT SHALL BE INSTALLED IN NEAT SYMMETRICAL LINES HORIZONTAL OR PERPENDICULAR TO BUILDING COLUMNS AND ROOF LINES. CONDUITS SHALL BE GROUPED ON COMMON SUPPORTS WHEREVER POSSIBLE.
2. EXPOSED CONDUIT ROUTING: CONDUITS MAY BE ROUTED EXPOSED IN MECHANICAL AND ELECTRICAL ROOMS ONLY. EXPOSED CONDUITS SHALL BE SECURED A MINIMUM OF 6" ABOVE FLOOR.
3. OUTDOOR EXPOSED CONDUIT ROUTING: CONDUITS ROUTED ON ROOF OR EXPOSED TO WEATHER SHALL BE GRC, PVC OR LIQUID–TIGHT FLEX. PROVIDE WATER–TIGHT CONNECTIONS AND FITTINGS.
4. CLEARANCES: VERIFY PHYSICAL DIMENSIONS OF EQUIPMENT TO ENSURE THAT ACCESS CLEARANCES CAN BE MET.
5. CONNECTIONS: PROVIDE GRS, METALLIC FLEX, OR LIQUIDTITE FLEX CONDUITS FOR CONNECTIONS TO MOTORS OR MOTORIZED EQUIPMENT.
6. WIRING: PROVIDE MINIMUM #12 AWG WIRE SIZE. IF CONDUIT IS TO BE USED MINIMUM IS TO BE 1/2". FLEXIBLE CONDUIT AND FLEXIBLE CABLE IS PERMISSIBLE THROUGHOUT THE BUILDING.
7. WIRING: PROVIDE MINIMUM #10 AWG COPPER CONDUCTOR SIZE IN 120V BRANCH CIRCUIT RUNS OVER 75' IN LENGTH.

SITE ELECTRICAL

1. TRENCHING: COORDINATE ALL TRENCHING WORK WITH OTHER UTILITY LOCATIONS AND DRAINAGE TRENCHES.
2. UNDERGROUND CONDUITS: PROVIDE PVC, SCHEDULE 40, 3/4" MINIMUM. PROVIDE GRC CONDUIT TRANSITION ELBOW WHEN TURNING UP TO ABOVE GRADE.
3. DIRECT–BURIED CONDUITS: CONDUIT FOR BRANCH CIRCUITS OUTSIDE BUILDINGS NOT BENEATH DRIVEWAYS OR PARKING AREAS SHALL BE DIRECTLY BURIED WITHOUT CONCRETE ENCASEMENT. THE DEPTH TO THE TOP OF BURIED CONDUITS SHALL BE 36". PROVIDE MARKER TAPE 12" BELOW GRADE.
4. BELOW SLAB: CONDUIT ROUTED BELOW ON–GRADE FLOOR SLABS SHALL BE INSTALLED PRIOR TO FLOOR SLAB POUR. ROUTE CONDUITS BELOW SLAB AS STRAIGHT AS POSSIBLE TO MINIMIZE BENDS.
5. ALL CONDUITS PENETRATING THE BUILDING ENVELOPE BELOW GRADE SHALL FOLLOW WATERPROOFING REQUIREMENTS IN THE ARCHITECTURAL DRAWINGS.

NEUTRALS

1. AT CONTRACTORS OPTION, NEUTRALS MAY BE SHARED ON COMBINED HOMERUNS UNLESS THE CIRCUIT HAS A GFCI BREAKER, AN ISOLATED GROUND, OR IS FROM A PANEL WITH TVSS PROTECTION. ANY NEUTRAL DOWNSTREAM FROM A DIMMER SHALL BE DEDICATED TO THE DIMMED LOAD.
2. NEUTRAL WIRES SHOWN FOR TWO AND THREE POLE MECHANICAL AND KITCHEN EQUIPMENT MAY BE OMITTED UPON VERIFICATION THAT THEY ARE NOT REQUIRED EITHER FOR OPERATION OR CONTROL CIRCUITS PER MANUFACTURER'S SPECIFICATIONS.

LIGHTING

1. PROVIDE LIGHT FIXTURES WITH PROPER FITTING FLANGES, MOUNTING SUPPORTS, AND ACCESSORY ITEMS, UL LISTED FOR CONDITIONS OF USE.

LOW VOLTAGE LIGHTING

1. PROVIDE LOW VOLTAGE TRANSFORMERS IN NEARBY ACCESSIBLE CEILING SPACE.
2. PROVIDE LOW VOLTAGE CONDUCTORS SIZED PER MANUFACTURER'S GUIDELINES TO MINIMIZE VOLTAGE DROP.

LIGHTING CONTROL

1. THE MAXIMUM LIGHTING POWER THAT MAY BE CONTROLLED FROM A SINGLE SWITCH OR AUTOMATIC CONTROL SHALL NOT EXCEED THAT WHICH IS PROVIDED BY A TWENTY AMPERE CIRCUIT LOADED TO NOT MORE THAN EIGHTY PERCENT. A MASTER CONTROL MAY BE INSTALLED PROVIDED THE INDIVIDUAL SWITCHES RETAIN THEIR CAPABILITY TO FUNCTION INDEPENDENTLY.
2. EMERGENCY FIXTURES: EMERGENCY BATTERY/CHARGER SHALL BE CONNECTED TO AN UNSWITCHED LEG OF THE DESIGNATED CIRCUIT.

GENERAL REQUIREMENTS

1. DRAWINGS ARE DIAGRAMMATIC, SHOWING THE GENERAL LOCATION, TYPE, LAYOUT, AND EQUIPMENT REQUIRED.
2. THE DRAWINGS SHALL NOT BE SCALED FOR EXACT MEASUREMENT.
3. REFER TO ARCHITECTURAL DRAWINGS FOR DIMENSIONS.
4. REFER TO MANUFACTURER'S STANDARD INSTALLATION DRAWINGS FOR EQUIPMENT CONNECTIONS AND INSTALLATION REQUIREMENTS.
5. PROVIDE CONNECTIONS, ACCESSORIES, OFFSETS, AND MATERIALS NECESSARY FOR A COMPLETE SYSTEM.

CONTRACTOR SUBSTITUTIONS & REVISIONS

1. PLEASE SUBMIT PROPOSALS FOR SUBSTITUTIONS OR REVISIONS FOR REVIEW AND APPROVAL PRIOR TO ORDERING MATERIAL OR DOING WORK.
2. FOR EQUIPMENT THAT IS SCHEDULED BY MANUFACTURER'S NAME AND CATALOG DESIGNATIONS, THE MANUFACTURER'S PUBLISHED DATA AND/OR SPECIFICATION FOR THAT ITEM ARE CONSIDERED PART OF SPECIFICATION.
3. ENGINEERING COSTS FOR REVISING MEP PLANS SHALL BE ADDRESSED IN THE COST ANALYSIS OF THE SUBSTITUTION PROPOSAL.
4. CONTRACTOR TO COORDINATE WITH ENGINEER AND DETERMINE ASSOCIATED DESIGN AND PERMITTING COSTS. CONTRACTOR SHALL BE RESPONSIBLE FOR OTHER COSTS ASSOCIATED WITH UNFORESEEN ISSUES RESULTING FROM SUBSTITUTIONS OR REVISIONS.

PRE-CON MEETING NOTES

CONTRACTORS SHALL ATTEND A PRE–CONSTRUCTION MEETING WITH THE ENGINEER FOR THE PURPOSE OF REVIEWING THE WORK PRIOR TO ORDERING ANY EQUIPMENT OR PERFORMING ANY WORK. THE MEETING SHALL BE LOCATED AT THE PROJECT SITE ON A DATE AND TIME TO BE MUTUALLY AGREED. THE MEETING WILL BE A WORKING SESSION. THE MEETING WILL BE FACILITATED BY THE ENGINEER AND THE AGENDA WILL INCLUDE A DETAILED REVIEW OF THE PLANS AND SPECIFICATIONS, CROSS CHECK WITH OTHER TRADES FOR COORDINATION ISSUES, REVIEW OF PROPOSED PRODUCTS, REVIEW OF PLANNED MEANS AND METHODS,AND ON–SITE INVESTIGATION OF FIELD CONDITIONS RELATIVE TO EXISTING CONDITIONS THAT COULD AFFECT THE WORK. PERSONS ATTENDING THE MEETING SHALL BE KNOWLEDGEABLE OF THE PROJECT AND SHALL BE THE SPECIFIC PERSONS INTENDED TO CONTINUE WITH THE PROJECT THROUGH TO COMPLETION. IF REQUIRED, REVISED PLANS WILL BE ISSUED THROUGH OFFICIAL CHANNELS. CHANGES IN THE BID PRICE WILL BE DISCUSSED, BUT NO CHANGE ORDERS WILL BE ISSUED UNLESS PROCESSED THOUGH OFFICIAL CHANNELS. IT SHALL BE UNDERSTOOD THAT THE ENGINEER HAS NO AUTHORITY TO ISSUE CHANGE ORDERS.

THE FOLLOWING TRADES SHALL BE REPRESENTED FOR THE MINIMUM TIME INDICATED:

MECHANICAL SHEET METAL	4 HOURS
PLUMBING/PIPING	4 HOURS
ELECTRICAL	4 HOURS
SPRINKLER	2 HOURS
GENERAL CONTRACTOR	ALL SESSIONS

DRAWING INDEX

DWG	DESCRIPTION	PERMIT SET 03/21/25	PERMIT RESUBMITTAL SET 07/02/25
E0.00	LEGEND, GENERAL NOTES, DRAWING INDEX	X	X
E0.01	PROJECT NOTES	X	X
E0.10	SITE PLAN	X	X
E1.01	LIGHTING PLAN – FIRST FLOOR	X	X
E1.02	LIGHTING PLAN – SECOND FLOOR	X	X
E1.03	LIGHTING PLAN – POOL	X	X
E1.10	PHOTOMETRIC PLAN – FIRST FLOOR	X	X
E1.11	PHOTOMETRIC PLAN – POOL	X	X
E1.50	LIGHTING NOTES & LUMINAIRE SCHEDULES	X	X
E3.01	POWER PLAN – FIRST FLOOR	X	X
E3.02	POWER PLAN – SECOND FLOOR		
E6.00	ONE–LINE DIAGRAM & NOTES	X	X
E6.01	PANELS SCHEDULES	X	X
E8.00	LIGHTING COMPLIANCE FORMS	X	X

City of Puyallup Development & Permitting Services ISSUED PERMIT
Building | Planning | Engineering | Public Works | Fire | Traffic

Separate Electrical Permit is required with the Washington State Department of Labor & Industries. https://lni.wa.gov/licensing-permits/electrical/electrical-permits-fees-and-inspections or call for Licensing Information: 1-800-647-0982

NO.	DATE	REVISIONS DESCRIPTION

ROBISON ENGINEERING, INC
19401 40TH AVE W, SUITE 302
LYNNWOOD, WA 98036
206-364-3343 TEL
CONTACT: MARK STEINKE

STATE OF WASHINGTON MARK STEINKE 22 REGISTERED PROFESSIONAL ENGINEER 07/01/2025

DRAWN: LYSAK K. | DESIGNED: LYSAK K. | CHECKED: STEINKE M. | APPROVED: STEINKE M.

PROJECT: EAST TOWN CROSSING CLUBHOUSE
MULTIFAMILY DEVELOPMENT
PIONEER WAY & SHAW RD. PUYALLUP, WA

ROBISON ENGINEERING, INC
19401 40TH AVE W, SUITE 302
LYNNWOOD, WA 98036
PHONE:(206)364-3343

PERMIT SET
07/02/2025

SHEET TITLE:
LEGEND, GENERAL NOTES, DRAWING INDEX

SHEET NO.
E0.00

PRCNG20250692

APPLICABLE CODES

THE FOLLOWING PROJECT DESIGN IS BASED ON THE FOLLOWING CODES:

-2021 INTERNATIONAL ENERGY CONSERVATION CODE, COMMERCIAL AND WA AMENDMENT (WSEC)
-2021 INTERNATIONAL ENERGY CONSERVATION CODE, RESIDENTIAL AND WA AMENDMENT (WSEC)
-2021 INTERNATIONAL BUILDING CODE AND WA AMENDMENT (IBC)
-2021 INTERNATIONAL MECHANICAL CODE AND WA AMENDMENT (IMC)
-2021 INTERNATIONAL FIRE CODE AND WA AMENDMENT (IFC)
-2021 UNIFORM PLUMBING CODE AND WA AMENDMENT (UPC)
-2023 NEC (NEC)

VIBRATION AND ACOUSTICAL ISOLATION

THE FOLLOWING MEASURES SHALL BE TAKEN TO MINIMIZE VIBRATION AND NOISE TRANSMISSION FROM MECHANICAL AND ELECTRICAL EQUIPMENT TO THE INTERIOR SPACES:

TRANSFORMERS:

A) PROVIDE FLEXIBLE CONDUIT OR MC CABLE AT EQUIPMENT CONNECTION.
B) MOUNT TRANSFORMERS ON NEOPRENE GROMMET ISOLATORS.

SUBDUCT EXHAUST FANS:

A) PROVIDE FLEXIBLE CONDUIT OR MC CABLE AT EQUIPMENT CONNECTION.

ENCLOSED GARAGE EXHAUST FANS:

A) PROVIDE FLEXIBLE CONDUIT OR MC CABLE AT EQUIPMENT CONNECTION.

ROOFTOP AIR HANDLERS:

A) PROVIDE FLEXIBLE CONDUIT OR MC CABLE AT EQUIPMENT CONNECTION.

FAN COIL UNITS:

A) PROVIDE FLEXIBLE CONDUIT OR MC CABLE AT EQUIPMENT CONNECTION.

ROOF MOUNTED CONDENSERS:

A) PROVIDE FLEXIBLE CONDUIT OR MC CABLE AT EQUIPMENT CONNECTION.

FLEXIBLE CONDUIT OR MC CABLE CONNECTIONS FOR VIBRATION ISOLATION SHALL BE A MINIMUM OF TWO FEET LONG.

STRUCTURAL PENETRATIONS

THE ELECTRICAL CONTRACTOR SHALL BE RESPONSIBLE FOR FINAL COORDINATION OF EDGE OF SLAB DRAWINGS AND OTHER PENETRATIONS OF STRUCTURAL SLABS AND SHEAR WALLS FOR ALL ITEMS RELATED TO THE ELECTRICAL SCOPE OF WORK.

IRRIGATION NOTES

COORDINATE WITH LANDSCAPE CONTRACTOR FOR CONDUIT PATHWAY WITHIN THE BUILDING FOR ANY IRRIGATION CONTROLS FOR UPPER FLOORS.

CONDUIT & CONDUCTOR FIRE RATING

1. CONDUIT FOR ELECTRICAL CONDUCTORS BY THE FACP OR FIRE ALARM SYSTEM SHALL BE IN 2 HOUR RATED ENCLOSURES OR ENCASED IN 2-INCH OF CONCRETE AND RATED CABLE ASSEMBLIES, OR BE CONDUCTORS IN 2 HOUR-RATED RACEWAYS PER NFPA 72.
2. THE EQUIPMENT AND CONTROL WIRING SHALL BE ENCLOSED BY FIRE BARRIERS CONSTRUCTED IN ACCORDANCE WITH IBC SECTION 707 OR HORIZONTAL ASSEMBLIES CONSTRUCTED IN ACCORDANCE WITH IBC SECTION 711, OR USING A 2 HR RATED CABLE SYSTEM OR ENCLOSED WITHIN 2" OF CONCRETE.
3. FIRE ALARM WIRING SHALL COMPLY WITH IBC 907.6.1. WIRING SHALL COMPLY WITH THE REQUIREMENTS OF NFPA 70.
4. RACEWAYS FOR THE DEDICATED BRANCH CIRCUIT(S) REQUIRED FOR PRIMARY POWER TO THE FIRE ALARM CONTROL PANEL (FACP) SHALL BE IN 2 HOUR RATED ENCLOSURES OR ENCASED IN 2-INCH OF CONCRETE AND RATED CABLE ASSEMBLIES, OR BE CONDUCTORS IN 2 HOUR-RATED RACEWAYS PER IBC 907 AND NFPA 72 SECTION 10.6.11.3.1.3
5. ALL WIRING USED FOR SMOKE CONTROL, REGARDLESS OF THE VOLTAGE SHALL HAVE FIRE-RESISTANCE RATED PROTECTION OF AT LEAST 2 HOURS OR AS REQUIRED IN RULES PROMULGATED BY THE BUILDING OFFICIAL. IFC 909.11.2

City of Puyallup
Development & Permitting Services
ISSUED PERMIT

Building	Planning
Engineering	Public Works
Fire	Traffic

NO.	DATE	REVISIONS DESCRIPTION

ROBISON ENGINEERING, INC
19401 40TH AVE W, SUITE 302
LYNNWOOD, WA 98036
206-364-3343 TEL
CONTACT: MARK STEINKE

MARK STEINKE
STATE OF WASHINGTON
REGISTERED
PROFESSIONAL ENGINEER
07/01/2025

DRAWN:	DESIGNED:	CHECKED:	APPROVED:
LYSAK K.	LYSAK K.	STEINKE M.	STEINKE M.

PROJECT:
EAST TOWN CROSSING CLUBHOUSE
MULTIFAMILY DEVELOPMENT
PIONEER WAY & SHAW RD. PUYALLUP, WA

ROBISON ENGINEERING, INC
19401 40TH AVE W. SUITE 302
LYNNWOOD, WA 98036
PHONE:(206)364-3343

PERMIT SET
07/02/2025

SHEET TITLE:
PROJECT NOTES

SHEET NO.
E0.01

PRCNC20250692

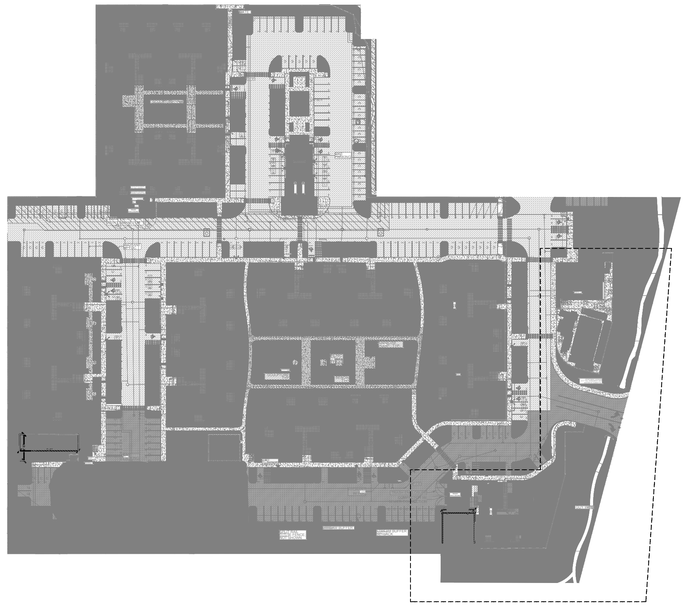

VICINITY MAP

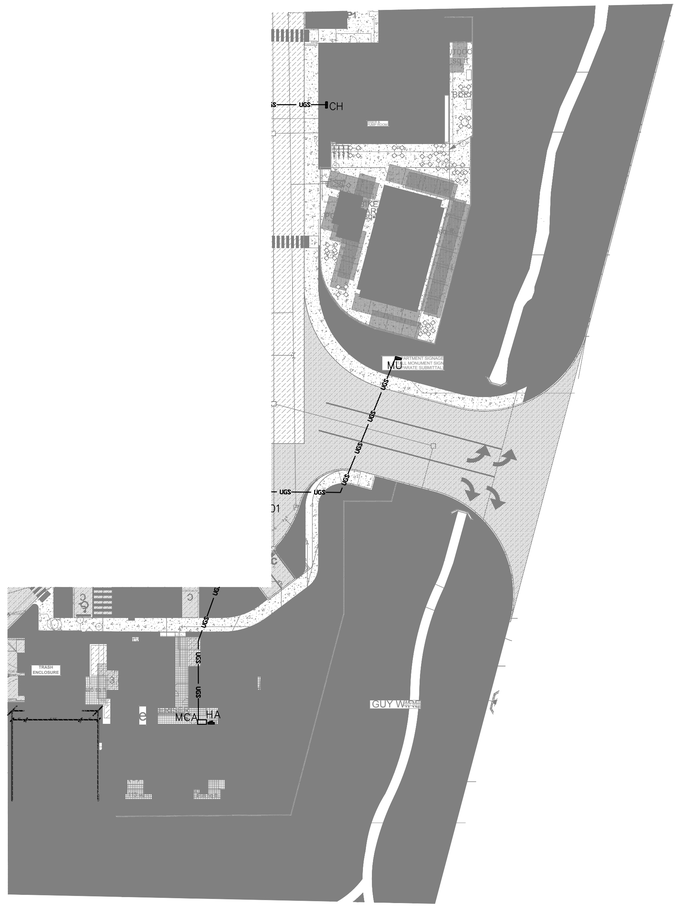

BUILDING A & CH SITE PLAN – POWER

SCALE: 1" = 30'

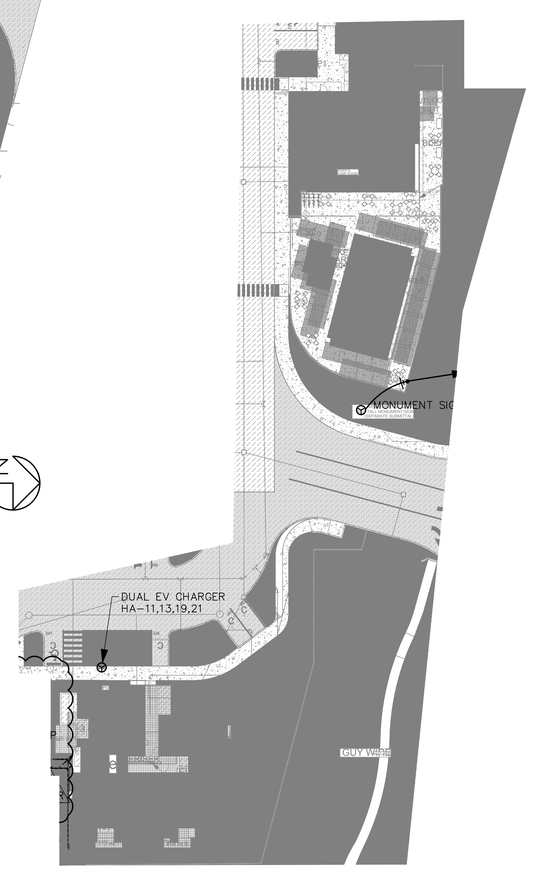

BUILDING A&CH SITE PLAN – EV & SOLAR LAYOUT

SCALE: 1" = 30'

City of Puyallup
Development & Permitting Services
ISSUED PERMIT

Building	Planning
Engineering	Public Works
Fire	Traffic

NO.	DATE	DESCRIPTION

REVISIONS

MARK STEINKE
STATE OF WASHINGTON
40019315
REGISTERED PROFESSIONAL ENGINEER
07/01/25

ROBISON ENGINEERING, INC
19401 40TH AVE W., SUITE 302
LYNNWOOD, WA 98036
206.364.3343 TEL
REI PROJECT NO.: 777-006
CONTACT: ARK.ESPINELI

DRAWN: KI
DESIGNED: MHS
CHECKED: PR
APPROVED: JMR

PROJECT: UPLAND CLUBHOUSE
17879 UPLANDS BLVD E
PUYALLUP, WASHINGTON 98446

ROBISON ENGINEERING, INC
19401 40TH AVE W. SUITE 302
LYNNWOOD, WA 98036
PHONE:(206)364-3343

DATE: 07/01/25

SHEET TITLE:
SITE PLAN - CLUBHOUSE

SHEET NO.
E0.10

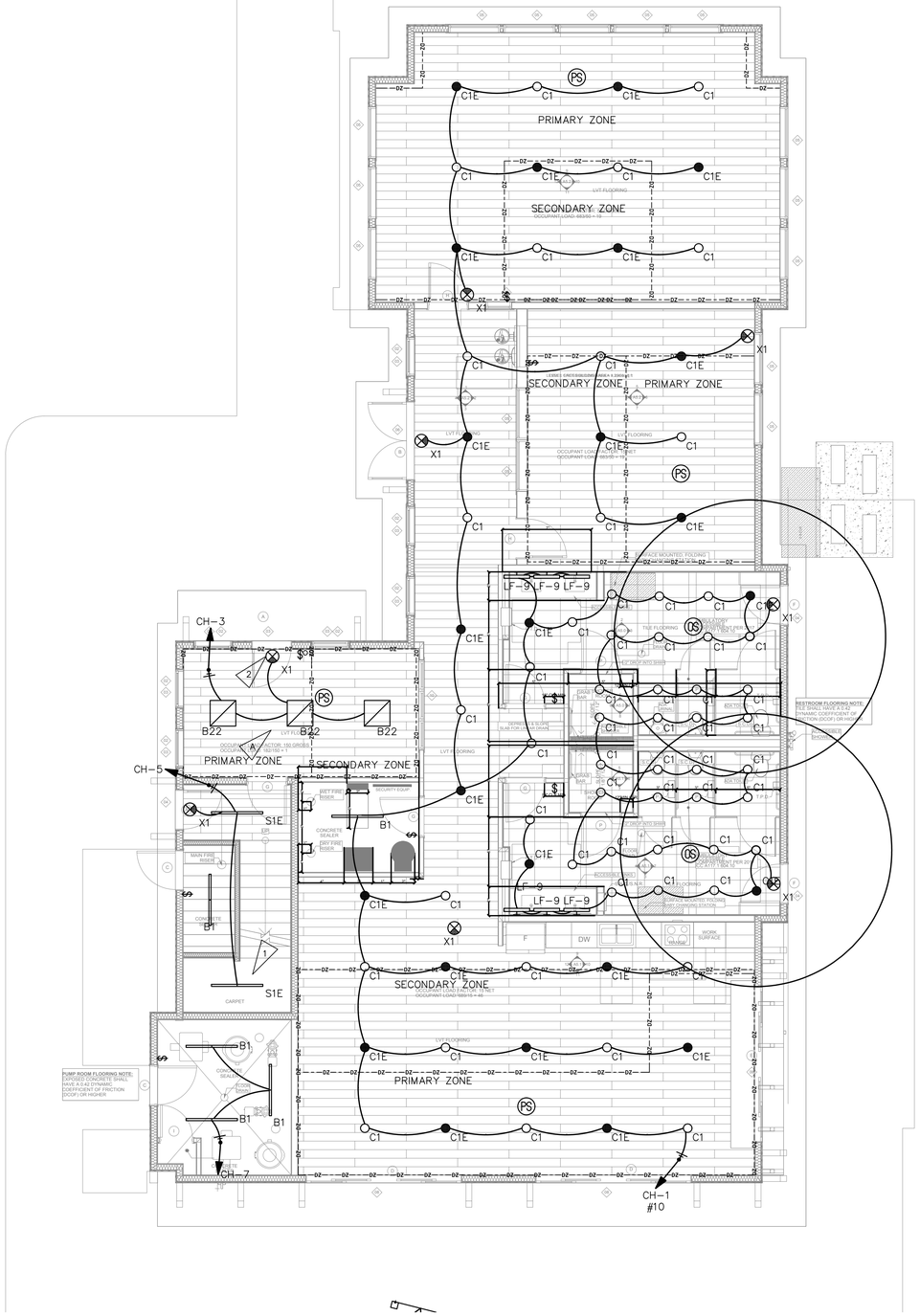

GENERAL NOTES

PRCNC20250692

1. SEE SHEET E1.50 FOR LUMINAIRE SCHEDULE AND LIGHTING NOTES.

FLAG NOTES

1. CIRCUIT STAIRS VERTICALLY. LUMINAIRE(S) IN STAIRWELL SHALL HAVE INTEGRAL OCCUPANCY SENSOR WHICH REDUCES LIGHTING POWER OF FIXTURE(S) BY 50% WHEN SPACE IS VACANT. (TYP)
2. EXIT SIGNS: PROVIDE UNSWITCHED HOT.

LIGHTING PLAN – FIRST FLOOR

SCALE: 3/16" = 1'-0"

0' 4' 8' 16'

N

REVISIONS			
NO.	DATE	DESCRIPTION	

ROBISON ENGINEERING, INC
19401 40TH AVE W., SUITE 302
LYNNWOOD, WA 98036
206-364-3343 ITD.
CONTACT: MARK STEINKE

MARK STEINKE — STATE OF WASHINGTON — 22 — REGISTERED PROFESSIONAL ENGINEER — 07/01/2025

DRAWN: LYSAK K.
DESIGNED: LYSAK K.
CHECKED: STEINKE M.
APPROVED: STEINKE M.

PROJECT:
EAST TOWN CROSSING CLUBHOUSE
MULTIFAMILY DEVELOPMENT
PIONEER WAY & SHAW RD. PUYALLUP, WA

ROBISON ENGINEERING, INC
19401 40TH AVE W. SUITE 302
LYNNWOOD, WA 98036
PHONE:(206)364.3343

PERMIT SET
07/02/2025

SHEET TITLE:
LIGHTING PLAN - CLUBHOUSE FIRST FLOOR

SHEET NO.
E1.01

City of Puyallup
Development & Permitting Services
ISSUED PERMIT

Building	Planning
Engineering	Public Works
Fire	Traffic

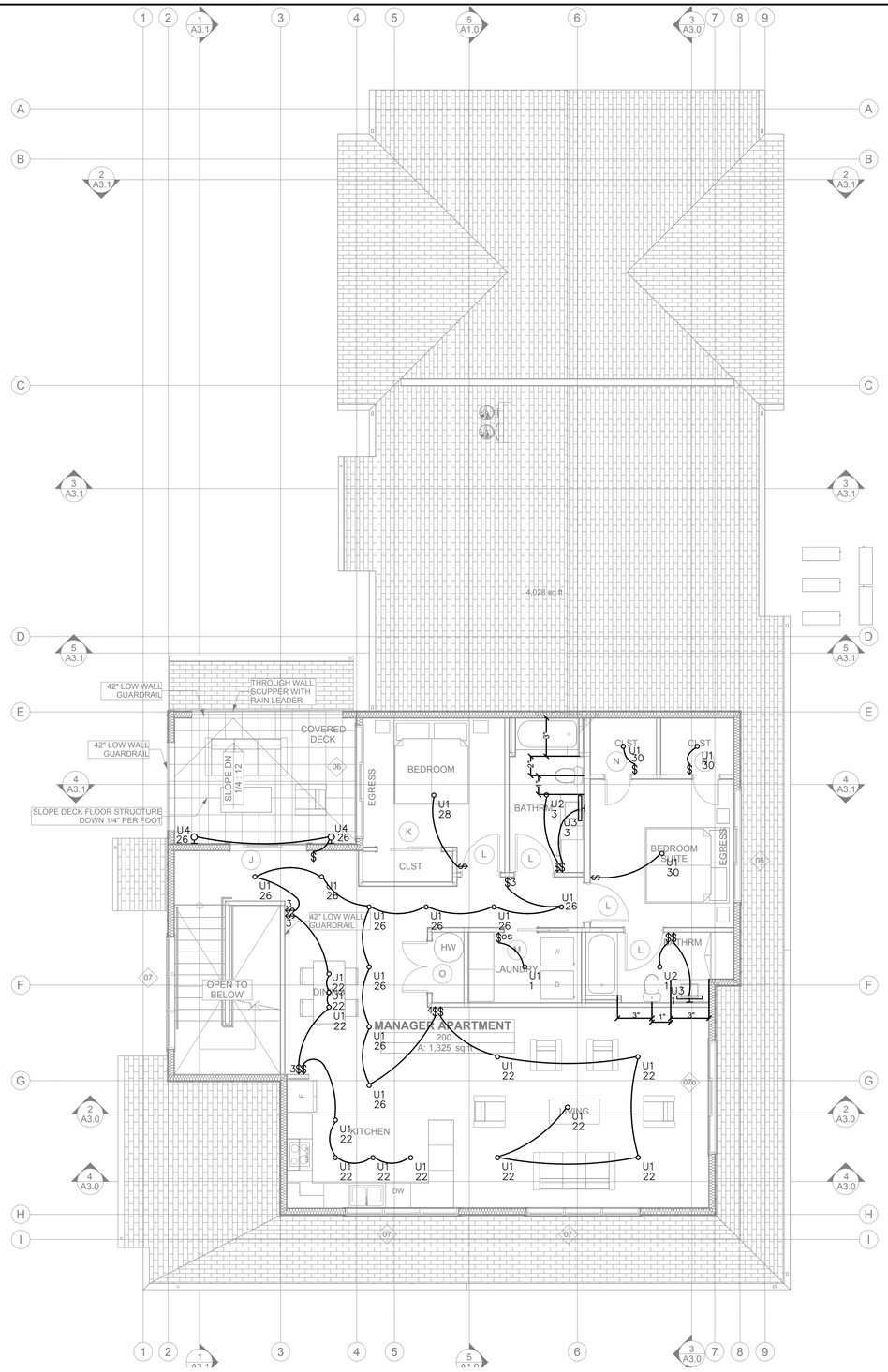

LIGHTING PLAN – SECOND FLOOR

SCALE: 3/16" = 1'-0"

0' 4' 8' 16'

N

GENERAL NOTES

PRCNC20250692

1. SEE SHEET E1.50 FOR LUMINAIRE SCHEDULE AND LIGHTING NOTES.

FLAG NOTES

1. CIRCUIT STAIRS VERTICALLY. LUMINAIRE(S) IN STAIRWELL SHALL HAVE INTEGRAL OCCUPANCY SENSOR WHICH REDUCES LIGHTING POWER OF FIXTURE(S) BY 50% WHEN SPACE IS VACANT. (TYP)
2. EXIT SIGNS: PROVIDE UNSWITCHED HOT.

REVISIONS		
NO.	DATE	DESCRIPTION

ROBISON ENGINEERING, INC
19401 40TH AVE W, SUITE 302
LYNNWOOD, WA 98036
206-364-3343 tel.
CONTACT: MARK STEINKE

MARK STEINKE
STATE OF WASHINGTON
REGISTERED PROFESSIONAL ENGINEER
07/02/2025

DRAWN: LYSAK K.
DESIGNED: LYSAK K.
CHECKED: STEINKE M.
APPROVED: STEINKE M.

PROJECT: EAST TOWN CROSSING CLUBHOUSE
MULTIFAMILY DEVELOPMENT
PIONEER WAY & SHAW RD. PUYALLUP, WA

ROBISON ENGINEERING, INC
19401 40TH AVE W, SUITE 302
LYNNWOOD, WA 98036
PHONE:(206)364-3343

PERMIT SET
07/02/2025

SHEET TITLE:
LIGHTING PLAN - CLUBHOUSE SECOND FLOOR

SHEET NO.
E1.02

City of Puyallup
Development & Permitting Services
ISSUED PERMIT
Building | Planning
Engineering | Public Works
Fire | Traffic

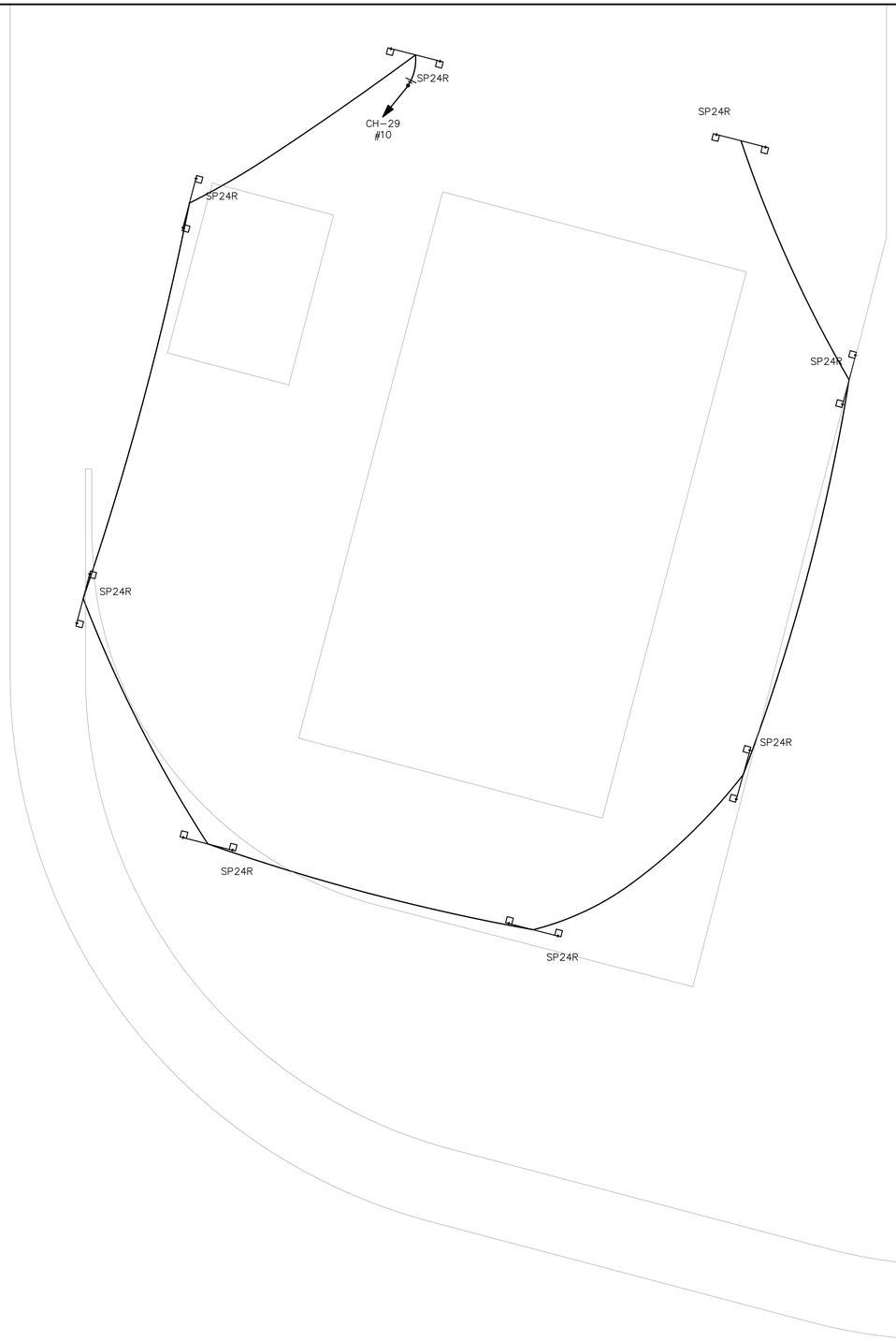

GENERAL NOTES

PRCNC20250692

1. SEE SHEET E1.50 FOR LUMINAIRE SCHEDULE AND LIGHTING NOTES.

FLAG NOTES

1. CIRCUIT STAIRS VERTICALLY. LUMINAIRE(S) IN STAIRWELL SHALL HAVE INTEGRAL OCCUPANCY SENSOR WHICH REDUCES LIGHTING POWER OF FIXTURE(S) BY 50% WHEN SPACE IS VACANT. (TYP)
2. EXIT SIGNS: PROVIDE UNSWITCHED HOT.

Swimming Pool to be Permitted Separately.

LIGHTING PLAN – POOL

SCALE: 3/16" = 1'-0"

0' 4' 8' 16'

N

City of Puyallup
Development & Permitting Services
ISSUED PERMIT
Building | Planning
Engineering | Public Works
Fire | Traffic

REVISIONS		
NO.	DATE	DESCRIPTION

ROBISON ENGINEERING, INC
19401 40TH AVE W, SUITE 302
LYNNWOOD, WA 98036
206-364-3343 TEL
CONTACT: MARK STEINKE

MARK K. STEINKE
STATE OF WASHINGTON
22
REGISTERED
PROFESSIONAL ENGINEER
07/01/2025

DRAWN:	DESIGNED:	CHECKED:	APPROVED:
LYSAK K.	LYSAK K.	STEINKE M.	STEINKE M.

PROJECT: **EAST TOWN CROSSING CLUBHOUSE**
MULTIFAMILY DEVELOPMENT
PIONEER WAY & SHAW RD. PUYALLUP, WA

ROBISON ENGINEERING, INC
19401 40TH AVE W. SUITE 302
LYNNWOOD, WA 98036
PHONE:(206)364-3343

PERMIT SET
07/02/2025

SHEET TITLE:
LIGHTING PLAN - CLUBHOUSE POOL

SHEET NO.
E1.03

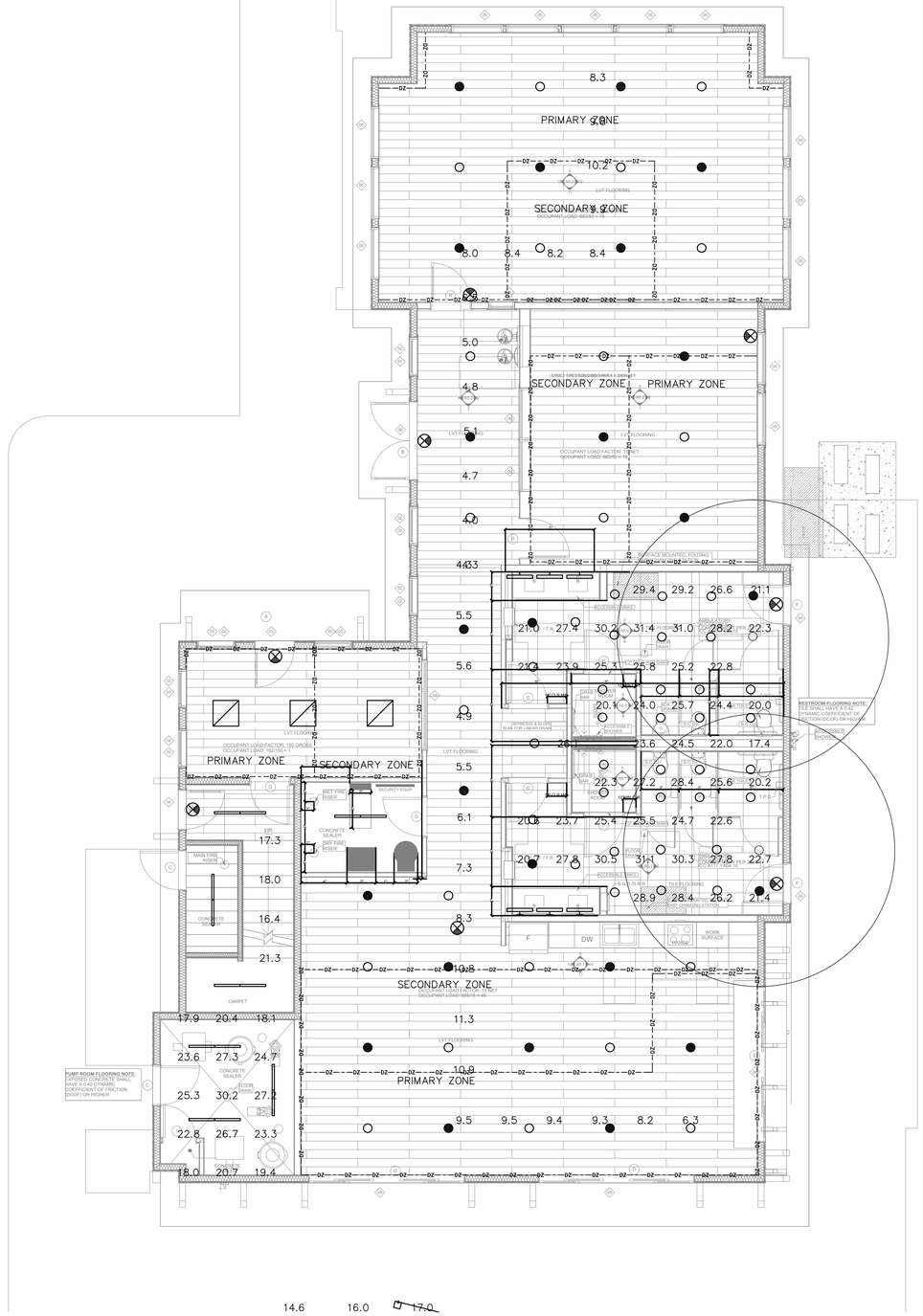

PHOTOMETRIC PLAN – FIRST FLOOR

SCALE: 3/16" = 1'–0"

0' 4' 8' 16'

N

GENERAL NOTES

PRCNC20250692

1. SEE SHEET E1.50 FOR LUMINAIRE SCHEDULE AND LIGHTING NOTES.

FLAG NOTES

1. CIRCUIT STAIRS VERTICALLY. LUMINAIRE(S) IN STAIRWELL SHALL HAVE INTEGRAL OCCUPANCY SENSOR WHICH REDUCES LIGHTING POWER OF FIXTURE(S) BY 50% WHEN SPACE IS VACANT. (TYP)
2. EXIT SIGNS: PROVIDE UNSWITCHED HOT.

Stairs Photometric Schedule

AVERAGE FOOT–CANDLES	18.24
MAXIMUM FOOT–CANDLES	21.3
MINIMUM FOOT–CANDLES	16.4
MINIMUM TO MAXIMUM FC RATIO	0.77
MAXIMUM TO MINIMUM FC RATIO	1.30
AVERAGE TO MINIMUM FC RATIO	1.11

Egress Photometric Schedule

AVERAGE FOOT–CANDLES	7.45
MAXIMUM FOOT–CANDLES	11.3
MINIMUM FOOT–CANDLES	4.0
MINIMUM TO MAXIMUM FC RATIO	0.36
MAXIMUM TO MINIMUM FC RATIO	2.80
AVERAGE TO MINIMUM FC RATIO	1.85

City of Puyallup
Development & Permitting Services
ISSUED PERMIT

Building	Planning
Engineering	Public Works
Fire	Traffic

NO.	DESCRIPTION	DATE
	REVISIONS	

ROBISON ENGINEERING, INC
19401 40TH AVE W, SUITE 302
LYNNWOOD, WA 98036
206-364-3343 TEL
CONTACT: MARK STEINKE

MARK STEINKE — STATE OF WASHINGTON — REGISTERED PROFESSIONAL ENGINEER — 07/01/2025

DRAWN: LYSAK K.
DESIGNED: LYSAK K.
CHECKED: STEINKE M.
APPROVED: STEINKE M.

PROJECT:
EAST TOWN CROSSING CLUBHOUSE
MULTIFAMILY DEVELOPMENT
PIONEER WAY & SHAW RD. PUYALLUP, WA

ROBISON ENGINEERING, INC
19401 40TH AVE W. SUITE 302
LYNNWOOD, WA 98036
PHONE:(206)364-3343

PERMIT SET
07/02/2025

SHEET TITLE:
PHOTOMETRIC PLAN - CLUBHOUSE FIRST FLOOR

SHEET NO.
E1.10

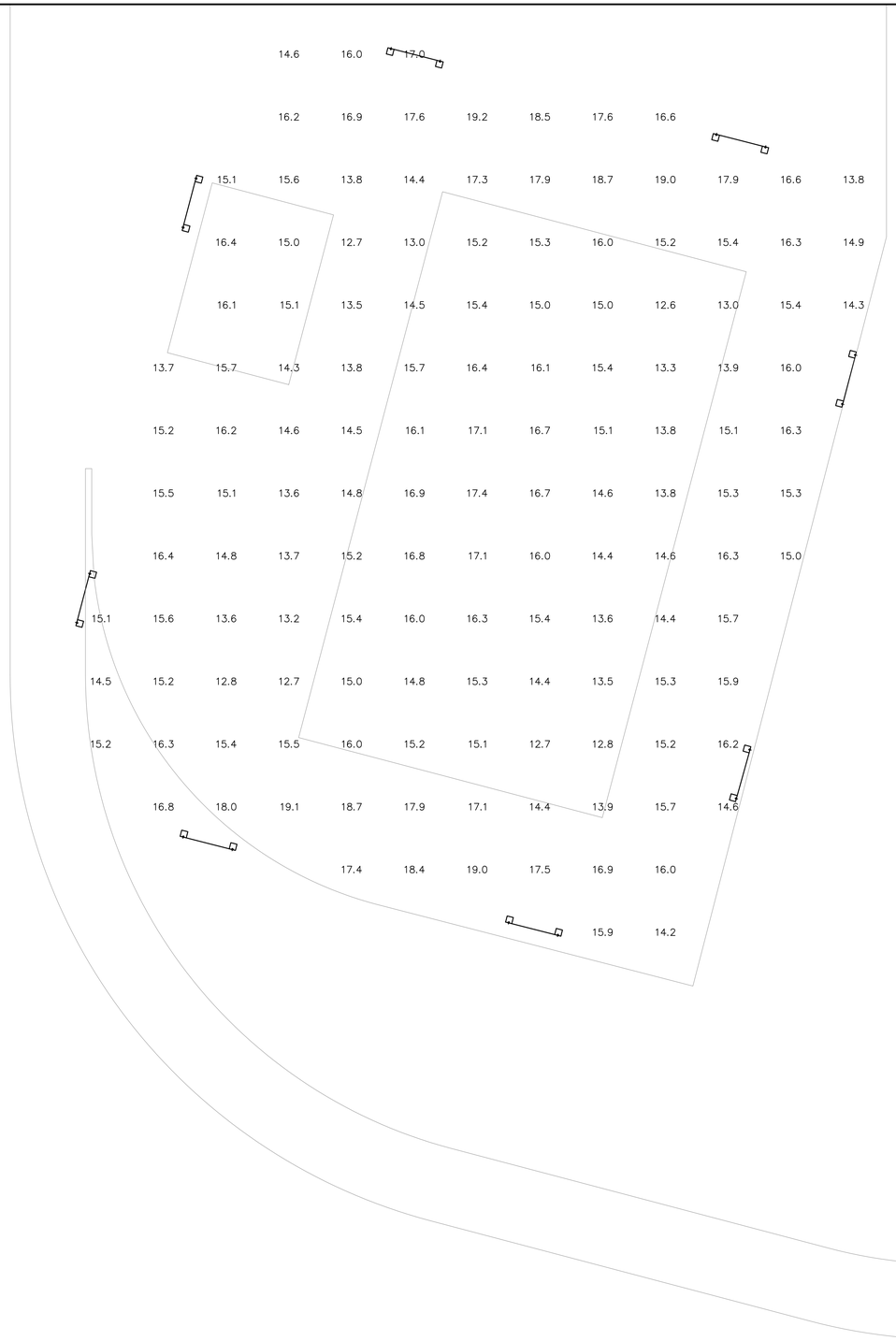

PHOTOMETRIC PLAN – POOL

SCALE: 3/16" = 1'-0"

0' 4' 8' 16'

N

GENERAL NOTES

PRCNC20250692

1. SEE SHEET E1.50 FOR LUMINAIRE SCHEDULE AND LIGHTING NOTES.

FLAG NOTES

1. CIRCUIT STAIRS VERTICALLY. LUMINAIRE(S) IN STAIRWELL SHALL HAVE INTEGRAL OCCUPANCY SENSOR WHICH REDUCES LIGHTING POWER OF FIXTURE(S) BY 50% WHEN SPACE IS VACANT. (TYP)
2. EXIT SIGNS: PROVIDE UNSWITCHED HOT.

Pool Photometric Schedule

AVERAGE FOOT–CANDLES	15.51
MAXIMUM FOOT–CANDLES	19.2
MINIMUM FOOT–CANDLES	12.6
MAXIMUM TO MINIMUM FC RATIO	1.53
AVERAGE TO MINIMUM FC RATIO	1.23

REVISIONS		
NO.	DATE	DESCRIPTION

ROBISON ENGINEERING, INC
19401 40TH AVE W, SUITE 302
LYNNWOOD, WA 98036
206-364-3343 tel.
CONTACT: MARK STEINKE

MARK STEINKE
STATE OF WASHINGTON
REGISTERED PROFESSIONAL ENGINEER
07/02/2025

DRAWN: LYSAK K.
DESIGNED: LYSAK K.
CHECKED: STEINKE M.
APPROVED: STEINKE M.

PROJECT: **EAST TOWN CROSSING CLUBHOUSE**
MULTIFAMILY DEVELOPMENT
PIONEER WAY & SHAW RD. PUYALLUP, WA

ROBISON ENGINEERING, INC
19401 40TH AVE W, SUITE 302
LYNNWOOD, WA 98036
PHONE:(206)364-3343

PERMIT SET
07/02/2025

SHEET TITLE:
PHOTOMETRIC PLAN - CLUBHOUSE POOL

SHEET NO.
E1.11

City of Puyallup
Development & Permitting Services
ISSUED PERMIT
Building | Planning
Engineering | Public Works
Fire | Traffic

PRCNC20250692

GENERAL LIGHTING NOTES

1. LIGHTING CONTROLS SHALL BE INSTALLED WHICH MEET ALL REQUIREMENTS OF LOCAL ENERGY CODES.
2. EMERGENCY LIGHT FIXTURES: IN ADDITION TO SWITCH-LEG, PROVIDE UNSWITCHED HOT TO SERVE INTERNAL BATTERY AND CHARGER.
3. LOCATIONS OF OCCUPANCY SENSORS, PHOTO SENSORS, DIMMERS, AND SWITCHES ARE DIAGRAMMATIC. CONTRACTOR TO COORDINATE QUANTITIES AND OPTIMAL LOCATIONS WITH LIGHTING CONTROL MANUFACTURER AND ARCH/OWNER.
4. AUTOMATIC LIGHTING SHUT-OFF CONTROLS SHALL BE PROVIDED BY LOCAL OCCUPANCY SENSORS UNLESS OTHERWISE NOTED. PUBLIC SPACES ARE ACTIVE 24/7 AND THEREFORE EXEMPT FROM AUTOMATIC LIGHTING SHUT-OFF REQUIREMENTS FOR SECURITY. (WSEC C405.2)
5. DAYLIGHT ZONES ARE SHOWN ON PLANS AS DEFINED BY WASHINGTON STATE ENERGY CODE (WSEC) C405.2.4.2. SIDELIGHT DAYLIGHT ZONES ARE REFERRED TO AS 'PRIMARY' AND 'SECONDARY' ON PLANS AND DENOTED BY DASHED LINES.
6. FOR CUSTOM FF&E FIXTURES, IT IS THE MANUFACTURER'S RESPONSIBILITY TO FURNISH PRODUCTS WHICH ARE COMPLIANT WITH ALL REQUIREMENTS OF LOCAL ENERGY CODES, AS WELL AS MATCH THE ELECTRICAL SPECIFICATIONS PROVIDED IN THE LUMINAIRE SCHEDULES. PROVIDE SUBMITTAL SHOP DRAWINGS WITHIN 30 DAYS OF RECEIVING FIXTURE ORDER. SUBMITTALS SHALL CLEARLY INDICATE LAMPING AND MAXIMUM WATTAGE RATING OF LAMP SOCKETS. NON-COMPLIANT FIXTURES REJECTED BY ELECTRICAL INSPECTOR SHALL BE RETURNED TO THE MANUFACTURER FOR REWORKING AND/OR RE-LABELING.
7. ALL FIXTURES SHALL BE INSTALLED ACCORDING TO THE MANUFACTURER'S INSTRUCTIONS.
8. CONTRACTOR SHALL BE RESPONSIBLE TO ORDER ALL NECESSARY HARDWARE, ELECTRICAL CABLE, TIMERS, TRANSFORMERS, ETC., AS REQUIRED FOR COMPLETION OF INSTALLATION OF A FULLY FUNCTIONING SYSTEM.
9. CONTRACTOR SHALL BE RESPONSIBLE FOR EQUIPPING ALL FIXTURES WITH THE EXACT LAMPS SPECIFIED IN THE FIXTURE SCHEDULE.
10. WHERE FIXTURES REQUIRE REMOTE TRANSFORMERS OR BALLASTS, THE CONTRACTOR SHALL DETERMINE LOCATIONS AS REQUIRED FOR EVEN LOAD DISTRIBUTION, SERVICE ACCESS, AND VENTILATION.
11. THE CONTRACTOR SHALL COORDINATE WITH THE ELECTRICAL ENGINEER FOR EXACT LOCATIONS OF TIMERS AND/OR PHOTO CELLS, IF ANY.
12. WHERE APPLICABLE, THE CONTRACTOR SHALL AIM AND ADJUST LIGHTING FIXTURES AS DIRECTED BY THE LIGHTING DESIGNER UPON COMPLETION OF THE INSTALLATION.

SPECIAL NOTE TO THE CONTRACTOR:

1. FIXTURE SUBMITTALS THAT DO NOT INCLUDE LAMP SPECIFICATIONS WILL BE CONSIDERED INCOMPLETE AND WILL NOT BE REVIEWED.

LIGHTING CONTROL SYSTEM REQUIREMENTS

1. CONTRACTOR TO PROVIDE A FULLY OPERATIONAL LIGHTING CONTROL SYSTEM.
2. CONTRACTOR SHALL VERIFY THE COMPATIBILITY OF DIMMING AND CONTROL MODULES WITH FIXTURE TYPES PRIOR TO INSTALLATION.
3. ELECTRICAL CONTRACTOR SHALL COORDINATE WITH A LIGHTING CONTROLS VENDOR TO OBTAIN LIGHTING CONTROL SYSTEM PACKAGE COMPLETE WITH DEVICES, WIRING DIAGRAMS, ANNOTATED PLANS INDICATING WHICH DEVICE TO BE USED IN EACH LOCATION, CONNECTION REQUIREMENTS, SET UP INSTRUCTIONS, COMMISSIONING AND CHECK-OUT FOLLOWING COMPLETION. PROVIDE ALL LOW VOLTAGE WIRING AS REQUIRED FOR CONTROL DEVICE INTERCONNECTIONS.
4. INSTALLER QUALIFICATIONS: TECHNICIAN INSTALLING AND WIRING THE LIGHTING CONTROL SYSTEM SHALL HAVE INSTALLED THIS SAME SYSTEM AT LEAST ONCE PREVIOUSLY. TECHNICIAN SHALL HAVE RECEIVED TRAINING BY FACTORY REPRESENTATIVE ON THE SYSTEM BEING INSTALLED.
5. PROVIDE LIGHTING CONTROL SYSTEM TO PERFORM THE FUNCTIONS DESCRIBED BELOW:
   - 5.1. PROVIDE MULTI-SCENE DIMMING SCHEDULING AND CONTROL. INSTALLER TO COORDINATE SCENE CONFIGURATIONS WITH BRAND AND PROPERTY MANAGER.
     - 5.1.1. PROVIDE KEYPAD CONTROLS STATIONS FOR SELECTING LIGHTING SCENES AND FOR MANUAL ON/OFF AND MULTI-LEVEL LIGHTING CONTROL. REFER TO PLANS FOR KEYPAD LOCATIONS.
   - 5.2. LIGHTING CONTROL SCHEDULE: PROVIDE SEPARATE SWITCHING AND DIMMING CONTROL FOR LIGHTING ZONES AS INDICATED.
   - 5.3. AUTOMATIC LIGHTING CONTROLS:
     - 5.3.1. UNLESS OTHERWISE NOTED ON PLANS, OCCUPANCY SENSORS SHALL AUTOMATICALLY TURN OFF ALL CONNECTED LIGHTING WITHIN 20 MINUTES OF SPACE BEING UNOCCUPIED. OCCUPANCY SENSORS SHALL EITHER BE MANUAL ON OR SHALL BE CONTROLLED TO AUTOMATICALLY TURN THE LIGHTING ON TO NOT MORE THAN 50 PERCENT POWER EXCEPT WHERE MANUAL ON WOULD ENDANGER THE SAFETY OR SECURITY OF THE ROOM OR BUILDING OCCUPANTS. (C405.2.1.1)
     - 5.3.2. MULTI-ZONE PHOTO-SENSORS SHALL PROVIDE SEPARATE CONTROL FOR LUMINAIRES IN EACH TYPE OF DAYLIGHT ZONE. (C405.2.4.1)
     - 5.3.3. EXTERIOR LIGHTING CONTROLS SHALL AUTOMATICALLY TURN OFF ALL EXTERIOR LIGHTING AS A FUNCTION OF AVAILABLE DAYLIGHT. BUILDING FACADE AND LANDSCAPE LIGHTING SHALL HAVE CONTROLS THAT AUTOMATICALLY SHUT OFF THE LIGHTING FOR A MINIMUM OF 6 HOURS PER NIGHT OR NOT LATER THAN ONE HOUR AFTER BUSINESS CLOSING TO NOT EARLIER THAN ONE HOUR BEFORE BUSINESS OPENING, WHICHEVER IS LESS. OTHER LIGHTING SHALL HAVE CONTROLS CONFIGURED TO AUTOMATICALLY REDUCE THE CONNECTED LIGHTING POWER BY AT LEAST 30 PERCENT FROM NO LATER THAN 12 MIDNIGHT TO 6 AM OR FROM ON HOUR AFTER BUSINESS CLOSING TO ONE HOUR BEFORE BUSINESS OPENING OR DURING ANY PERIOD WHEN NO ACTIVITY HAS BEEN DETECTED FOR A TIME OF NO LONGER THAN 15 MINUTES. (C405.2.6)
6. MEANS OF EGRESS ILLUMINATION: AT ANY TIME THE BUILDING IS OCCUPIED, THE MEANS OF EGRESS SHALL BE ILLUMINATED AT AN INTENSITY OF NOT LESS THAN 1 FOOTCANDLE AT FLOOR LEVEL. (IBC 1008.2.1)
7. DURING EMERGENCY CONDITIONS EMERGENCY LIGHTING CIRCUITS SHALL BYPASS ALL LIGHTING CONTROLS IN ORDER TO ENERGIZE ALL CONNECTED LUMINAIRES AT FULL CAPACITY. PROVIDE UL924 RELAYS AS REQUIRED TO BYPASS AREA CONTROLS.
   - 7.1. EMERGENCY PATHWAY EGRESS LIGHTING: ILLUMINATION PROVIDED ALONG THE EGRESS PATH AT FLOOR LEVEL SHALL AVERAGE AT LEAST 1 FOOT CANDLE. (IBC 1008.3.5)
   - 7.2. EMERGENCY LIGHTING SHALL BE SUPPLIED BY: ALL COMMON AREA LIGHTING CIRCUITS ARE POWERED AT FULL LOAD FROM THE EMERGENCY LIGHTING INVERTER (UPS) FOR A MINIMUM OF 90 MINUTES.

LIGHTING CONTROLS LEGEND

$ ^{a} ^{k}	TOGGLE SWITCH FOR MANUAL ON/OFF LIGHTING CONTROL (WSEC C405.2.3). SUBSCRIPT INDICATES WHICH FIXTURES ARE TO BE CONTROLLED BY WHICH SWITCH. SUBSCRIPT 'k' INDICATES TAMPER RESISTANT KEYED SWITCH FOR USE BY AUTHORIZED PERSONNEL ONLY.
^{a}	DIMMER SWITCH FOR MANUAL MULTI-LEVEL LIGHTING CONTROL. SWITCH SHALL ALSO HAVE MANUAL ON/OFF FUNCTIONALITY. SUBSCRIPT INDICATES WHICH FIXTURES ARE TO BE CONTROLLED BY WHICH DIMMER. (C405.2.3)
^{vs} ^{vs} ^{os} ^{os}	SWITCHES LABELED 'os' OR 'vs' SHALL TURN OFF ALL CONNECTED LUMINAIRES WITHIN 20 MINUTES OF SPACE BEING VACANT. (C405.2.1.1)
CS-01	CONTROL STATION FOR MANUAL LOCAL LIGHTING CONTROL (C405.2.3). WALLBOXES SHALL HAVE MANUAL ON/OFF AND DIMMING FUNCTIONALITY OF ALL CONNECTED LUMINAIRES. SUBSCRIPT CORRESPONDS TO 'LIGHTING CONTROLS' TABLE.
OS	OCCUPANCY SENSOR SHALL AUTOMATICALLY TURN OFF ALL CONNECTED LUMINAIRES WITHIN 20 MINUTES OF SPACE BEING VACANT. (C404.2.1.1)
^{ox} PS	MUTLIZONE PHOTOSENSOR FOR DAYLIGHT ZONE CONTROL SHALL AUTOMATICALLY ADJUST THE LIGHT OUTPUT OF ALL CONNECTED LUMINAIRES BASED ON THE DAYLIGHT LEVEL IN THE PRIMARY AND SECONDARY ZONES (C405.2.4). SUBSCRIPT INDICATES WHICH FIXTURES ARE TO BE CONTROLLED BY ZONE ACCORDING TO LIGHTING CONTROL SCHEDULE; 'x' INDICATES MULTIPLE ZONE CONTROL.

EXIT SIGN NOTES

DURING CONSTRUCTION UPON COMPLETION OF A TYPICAL FLOOR FRAMING AND BEFORE WALL COVER, ELECTRICAL CONTRACTOR SHALL WALK THE EGRESS PATHS WITH THE LOCAL INSPECTOR (AHJ) TO CONFIRM THAT ALL THE EXIT SIGNS ARE LOCATED PER THE AHJ'S SATISFACTION AND IDENTIFY ANY ADDITIONAL EXIT SIGNS THAT THE AHJ WISHES TO BE INSTALLED (IBC 1013.1). CONTRACTOR SHALL PROVIDE UP TO 10% ADDITIONAL EXIT SIGNS AT NO ADDITIONAL COST.

DECORATIVE LUMINAIRE SCHEDULE

CALLOUT	SYMBOL	MOUNTING	DESCRIPTION	MODEL	VOLTAGE	TYPE	CRI / CCT	LAMPING	WATTAGE
LF-9		SURFACE	DAINOLITE, CORVETTE LED VANITY LIGHT, MATTE BLACK		120	DIMMING		(1) 12W LED	12

NOTES:
1. CONTRACTOR TO FURNISH AND INSTALL ALL FIXTURES.
2. LUMINAIRE SCHEDULE IS BOD ONLY. CONTRACTOR TO SUBMIT FIXTURE MODEL OR EQUIVALENT. CONTRACTOR TO COORDINATE FIXTURE FINISHES WITH ARCHITECT/OWNER.
3. FIXTURE CATALOG NUMBERS DO NOT NECESSARILY DENOTE SPECIFIC MOUNTING ACCESSORIES. CONTRACTOR TO PROVIDE ALL NECESSARY ACCESSORIES TO SUCCESSFULLY COMPLETE THE INSTALLATION.

GENERAL LUMINAIRE SCHEDULE

CALLOUT	SYMBOL	MOUNTING	DESCRIPTION	MODEL	VOLTAGE	TYPE	CRI / CCT	LAMPING	WATTAGE
B1		CHAIN HUNG	4' NARROW WRAP - BOH	DAY-BRITE - CFI: FSW440L835-UNV-DIM EMLED	120	0-10V DIMMING	80 / 3500K	(1) 31.4W LED	31.4
B22		SURFACE	2X2 SURFACE MOUNT - OFFICES	SIGNIFY: 2FPZ 30L 835 2 DS UNV DIM	120	0-10V DIMMING	80 / 3500K	(1) 23W LED	23
C1		SURFACE	8" SURFACE DOWNLIGHT	DMF: DRDHNJO / DRD5S8R15930O	120	0-10V DIMMING	90 / 3000K	(1) 17W LED	17
C1E		SURFACE	8" SURFACE DOWNLIGHT - CORRIDORS EMERGENCY DRIVER BACKUP	DMF: DRDHNJO15OSEMS / DRD5S8R159300A	120	0-10V DIMMING	90 / 3000K	(1) 17W LED	17
S1E		SURFACE	4' STAIRWELL STRIP - INTEGRAL OCCUPANCY SENSOR - EM BATTERY BACKUP	HE WILLIAMS: SLF 4 L98 835 HIA EM/10W (L60) OCCWS FSP-L3-120 SD50-120	120	BI-LEVEL MOTION	80 / 3500K	(1) 46W LED	46

NOTES:
1. CONTRACTOR TO FURNISH AND INSTALL ALL FIXTURES.
2. LUMINAIRE SCHEDULE IS BOD ONLY. CONTRACTOR TO SUBMIT FIXTURE MODEL OR EQUIVALENT. CONTRACTOR TO COORDINATE FIXTURE FINISHES WITH ARCHITECT/OWNER.
3. FIXTURE CATALOG NUMBERS DO NOT NECESSARILY DENOTE SPECIFIC MOUNTING ACCESSORIES. CONTRACTOR TO PROVIDE ALL NECESSARY ACCESSORIES TO SUCCESSFULLY COMPLETE THE INSTALLATION.

UNIT LUMINAIRE SCHEDULE

CALLOUT	SYMBOL	MOUNTING	DESCRIPTION	MODEL	VOLTAGE	TYPE	LAMPING	WATTAGE
U1		CEILING	4" DOWNLIGHT	DMF: DRD5S-4-R-10-9-30-O	120	0-10V DIMMING	(1) 12W LED 3000K	12
U2		CEILING	4" DOWNLIGHT WET RATED	DMF: DRD5S-4-S-10-9-30-O	120	0-10V DIMMING	(1) 12W LED 3000K	12
U3		WALL	20" VANITY LIGHT	WAC: WS-35020-AB	120	ELV DIMMING	(1) 27W LED 3000K	27
U4		WALL	SLIM BALCONY LIGHT	WAC: WS-W2509-BK	120	NON DIMMING	(1) 16W LED 3000K	16

NOTES:
1. CONTRACTOR TO FURNISH AND INSTALL ALL FIXTURES.
2. LUMINAIRE SCHEDULE IS BOD ONLY. CONTRACTOR TO SUBMIT FIXTURE MODEL OR EQUIVALENT. CONTRACTOR TO COORDINATE FIXTURE FINISHES WITH ARCHITECT/OWNER.
3. FIXTURE CATALOG NUMBERS DO NOT NECESSARILY DENOTE SPECIFIC MOUNTING ACCESSORIES. CONTRACTOR TO PROVIDE ALL NECESSARY ACCESSORIES TO SUCCESSFULLY COMPLETE THE INSTALLATION.

POOL LUMINAIRE SCHEDULE

CALLOUT	SYMBOL	MOUNTING	DESCRIPTION	MODEL 1	VOLTAGE	TYPE	CRI/CCT	LAMPING	WATTAGE
SP24R		14' POLE	2 Ft Linear Parking Garage Fixture. Parking-Prismatic Clear	NLS Lighting, TRC3-T4-32L-1-30K7	120	ELECTRONIC	70 / 3000K	(1) 106W	106

NOTES:
1. CONTRACTOR TO FURNISH AND INSTALL ALL FIXTURES.
2. LUMINAIRE SCHEDULE IS BOD ONLY. CONTRACTOR TO SUBMIT FIXTURE MODEL OR EQUIVALENT. CONTRACTOR TO COORDINATE FIXTURE FINISHES WITH ARCHITECT/OWNER.
3. FIXTURE CATALOG NUMBERS DO NOT NECESSARILY DENOTE SPECIFIC MOUNTING ACCESSORIES. CONTRACTOR TO PROVIDE ALL NECESSARY ACCESSORIES TO SUCCESSFULLY COMPLETE THE INSTALLATION.

City of Puyallup Development & Building Services ISSUED PERMIT: Building, Planning, Engineering, Public Works, Fire, Traffic

NO.	DATE	REVISIONS DESCRIPTION

ROBISON ENGINEERING, INC
19401 40TH AVE W, SUITE 302
LYNNWOOD, WA 98036
206-364-3343 TEL
CONTACT: MARK STEINKE

MARK STEINKE — STATE OF WASHINGTON — REGISTERED PROFESSIONAL ENGINEER — 07/01/2025

DRAWN: LYSAK K. | DESIGNED: LYSAK K. | CHECKED: STEINKE M. | APPROVED: STEINKE M.

PROJECT: EAST TOWN CROSSING CLUBHOUSE
MULTIFAMILY DEVELOPMENT
PIONEER WAY & SHAW RD. PUYALLUP, WA

ROBISON ENGINEERING, INC
19401 40TH AVE W. SUITE 302
LYNNWOOD, WA 98036
PHONE:(206)364-3343

PERMIT SET
07/02/2025

SHEET TITLE: LIGHTING NOTES & SCHEDULE

SHEET NO. E1.50

PRCNC20250692

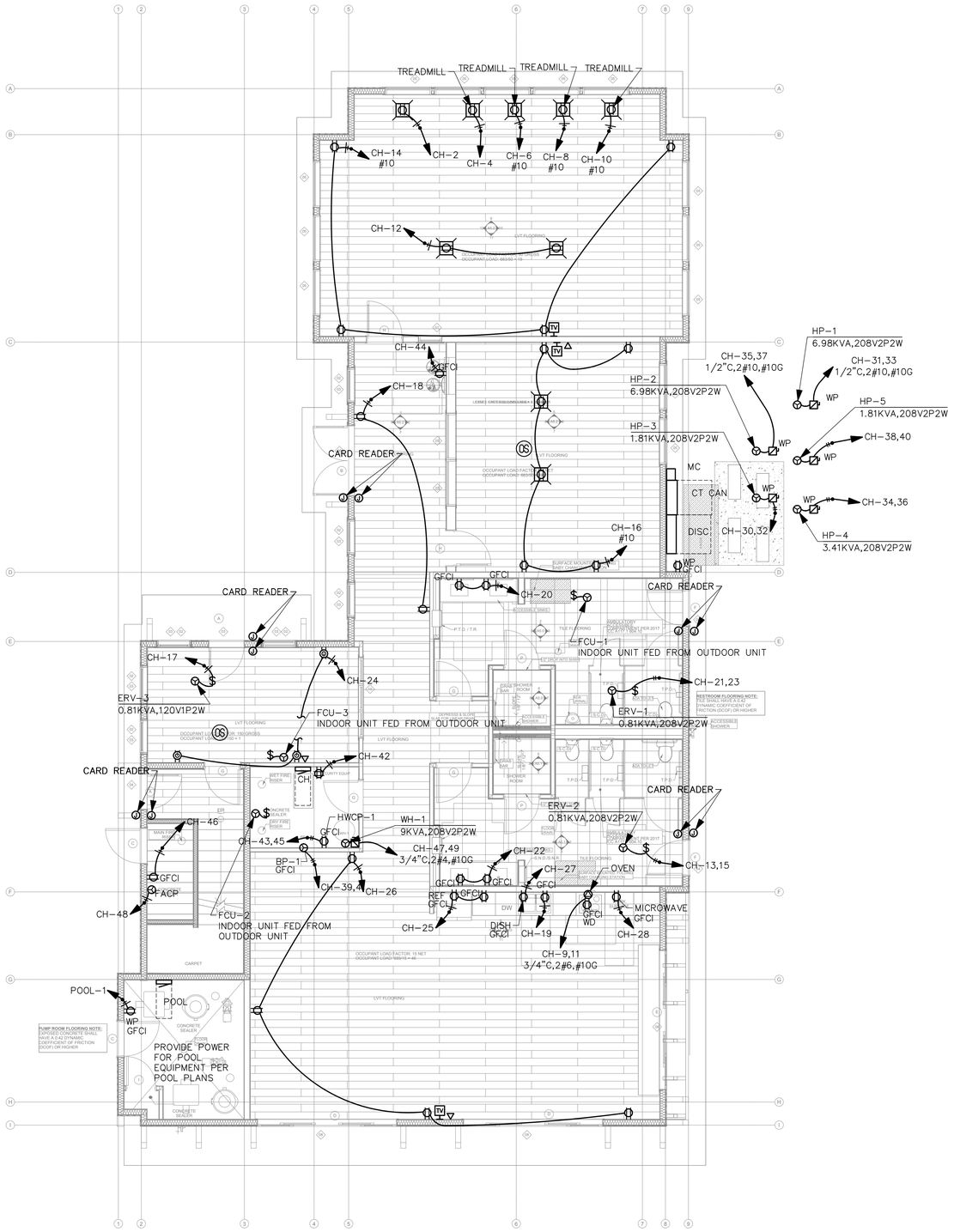

GENERAL NOTES

1. EC TO REFER TO ARCHITECTURAL AND INTERIOR DESIGNER ELEVATIONS FOR EXACT LOCATION OF RECEPTACLES. DATA AND PHONE, BEFORE ROUGH-IN.
2. PROVIDE GFCI CIRCUIT BREAKERS FOR ALL 120V, 15A AND 20A RECEPTACLES LOCATED IN THE GARAGE, KITCHEN AND SERVICE AREAS.
3. EC TO COORDINATE POWER REQUIREMENTS FOR MOTORIZED SHADES WITH OWNER PRIOR TO INSTALLATION

(OS) MOTORIZED SHADES

FLAG NOTES

1. PROVIDE 4'X8'X3/4" FIRE RETARDANT PLYWOOD. BOTTOM 6"AFF TOP OF PLYWOOD 102" AFF.
2. PROVIDE COPPER GROUND BAR 2"X24"X1/4" AND #6 COPPER GROUND WIRE TO MAIN SERVICE GROUND.
3. PROVIDE (2) 4" SLEEVES FOR LV CABLE TO COMM/DATA UNILITIES. COORDINATE RISER LOCATION WITH ARCHITECT.
4. PROVIDE, RECEPTACLE, LIGHT AND SWITCH AT ENTRANCE TO ATTIC ACCESS.

WA ENERGY CODE – CONTROLLED RECEPTACLES:

1. PROVIDE CONTROLLED RECEPTACLES IN AREAS INDICATED PER WA ENERGY CODE C405.10.
2. PROVIDE WATTSTOPPER DT-300 OR EQUIVALENT CEILING OCCUPANCY SENSOR AND BZ-200 CONTROL RELAYS IN ACCESSIBLE LOCATIONS.
3. WHEN THE AREA IS OCCUPIED, THEN THE CONTROLLED RECEPTACLES SHALL BE ENERGIZED.
4. SPLIT RECEPTACLES TO BE PROVIDED WITH CONTROLLED 120V HOT WIRED TO LOWER OUTLET AND CONTINUOUS 120V HOT WIRED TO UPPER OUTLET.

EXAMPLE

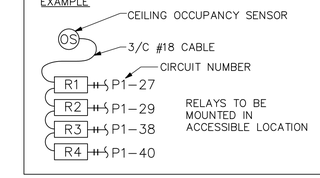

POWER PLAN – FIRST FLOOR

SCALE: 3/16" = 1'-0"

0' 4' 8' 16'

City of Puyallup Development & Permitting Services ISSUED PERMIT
Building | Planning | Engineering | Public Works | Fire | Traffic

REVISIONS			
NO.	DATE	DESCRIPTION	

ROBISON ENGINEERING, INC
19401 40TH AVE W, SUITE 302
LYNNWOOD, WA 98036
206-364-3343 TEL
CONTACT: MARK STEINKE

MARK STEINKE — STATE OF WASHINGTON — 22 — REGISTERED PROFESSIONAL ENGINEER — 07/01/2025

DRAWN: LYSAK K. | DESIGNED: LYSAK K. | CHECKED: STEINKE M. | APPROVED: STEINKE M.

PROJECT: **EAST TOWN CROSSING CLUBHOUSE**
MULTIFAMILY DEVELOPMENT
PIONEER WAY & SHAW RD. PUYALLUP, WA

ROBISON ENGINEERING, INC
19401 40TH AVE W. SUITE 302
LYNNWOOD, WA 98036
PHONE:(206)364-3343

PERMIT SET
07/02/2025

SHEET TITLE:
POWER PLAN - CLUBHOUSE FIRST FLOOR

SHEET NO.
E3.01

PRCNC20250692

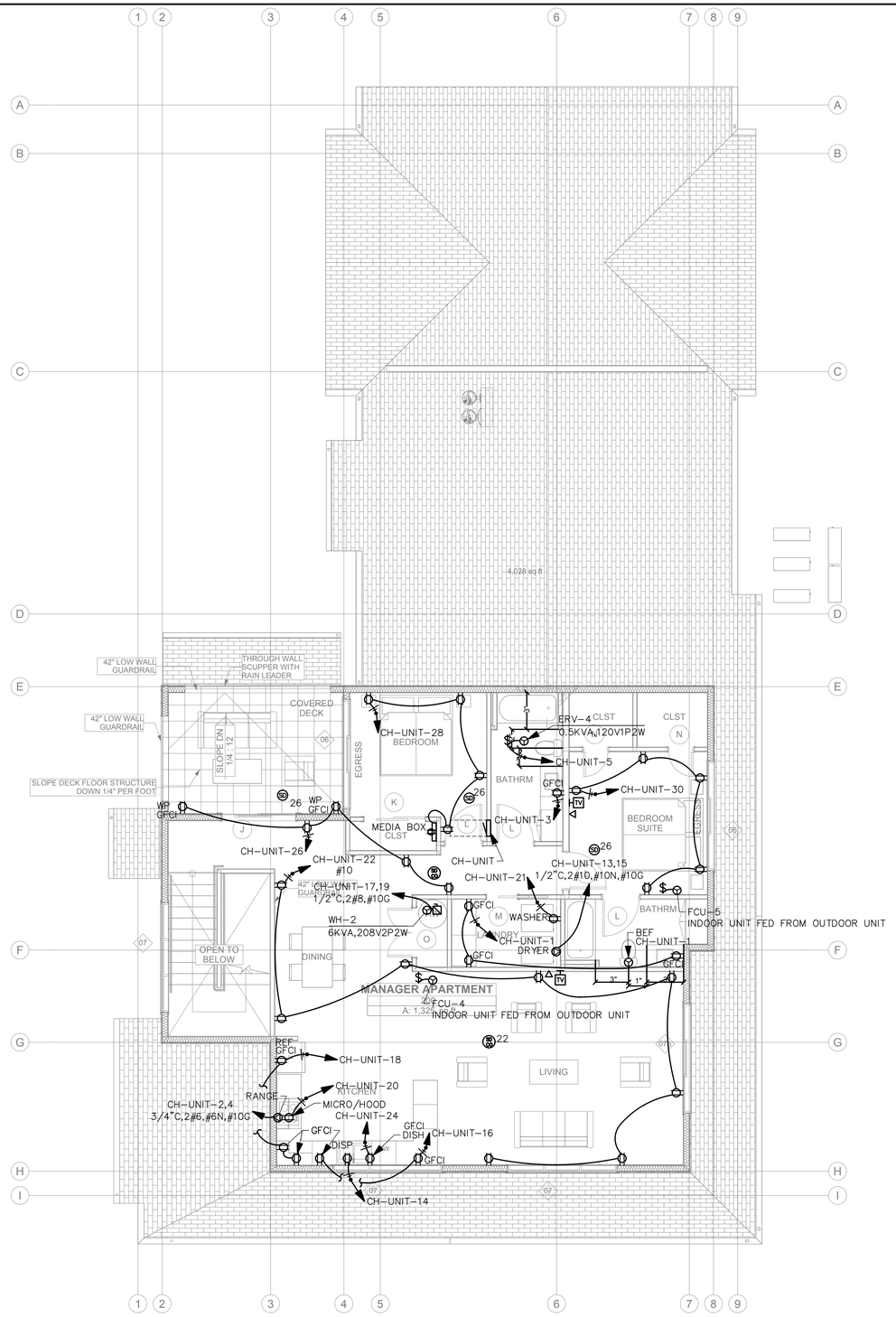

POWER PLAN – SECOND FLOOR

SCALE: 3/16" = 1'-0"

0' 4' 8' 16'

GENERAL NOTES

1. EC TO REFER TO ARCHITECTURAL AND INTERIOR DESIGNER ELEVATIONS FOR EXACT LOCATION OF RECEPTACLES. DATA AND PHONE, BEFORE ROUGH-IN.
2. PROVIDE GFCI CIRCUIT BREAKERS FOR ALL 120V, 15A AND 20A RECEPTACLES LOCATED IN THE GARAGE, KITCHEN AND SERVICE AREAS.
3. EC TO COORDINATE POWER REQUIREMENTS FOR MOTORIZED SHADES WITH OWNER PRIOR TO INSTALLATION

MOTORIZED SHADES

FLAG NOTES

1. PROVIDE 4'X8'X3/4" FIRE RETARDANT PLYWOOD. BOTTOM 6"AFF TOP OF PLYWOOD 102" AFF.
2. PROVIDE COPPER GROUND BAR 2"X24"X1/4" AND #6 COPPER GROUND WIRE TO MAIN SERVICE GROUND.
3. PROVIDE (2) 4" SLEEVES FOR LV CABLE TO COMM/DATA UNILITIES. COORDINATE RISER LOCATION WITH ARCHITECT.
4. PROVIDE, RECEPTACLE, LIGHT AND SWITCH AT ENTRANCE TO ATTIC ACCESS.

WA ENERGY CODE – CONTROLLED RECEPTACLES:

1. PROVIDE CONTROLLED RECEPTACLES IN AREAS INDICATED PER WA ENERGY CODE C405.10.
2. PROVIDE WATTSTOPPER DT-300 OR EQUIVALENT CEILING OCCUPANCY SENSOR AND BZ-200 CONTROL RELAYS IN ACCESSIBLE LOCATIONS.
3. WHEN THE AREA IS OCCUPIED, THEN THE CONTROLLED RECEPTACLES SHALL BE ENERGIZED.
4. SPLIT RECEPTACLES TO BE PROVIDED WITH CONTROLLED 120V HOT WIRED TO LOWER OUTLET AND CONTINUOUS 120V HOT WIRED TO UPPER OUTLET.

EXAMPLE

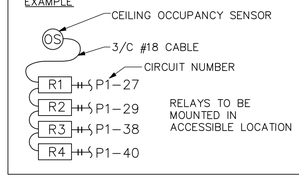

NO.	DATE	REVISIONS DESCRIPTION

ROBISON ENGINEERING, INC
19401 40TH AVE W, SUITE 302
LYNNWOOD, WA 98036
206-364-3343 tel.
CONTACT: MARK STEINKE

MARK STEINKE
STATE OF WASHINGTON
REGISTERED PROFESSIONAL ENGINEER
07/02/2025

DRAWN: LYSAK K.
DESIGNED: LYSAK K.
CHECKED: STEINKE M.
APPROVED: STEINKE M.

PROJECT: EAST TOWN CROSSING CLUBHOUSE
MULTIFAMILY DEVELOPMENT
PIONEER WAY & SHAW RD. PUYALLUP, WA

ROBISON ENGINEERING, INC
19401 40TH AVE W, SUITE 302
LYNNWOOD, WA 98036
PHONE:(206)364-3343

PERMIT SET
07/02/2025

SHEET TITLE:
POWER PLAN - CLUBHOUSE SECOND FLOOR

SHEET NO.
E3.02

City of Puyallup
Development & Permitting Services
ISSUED PERMIT
Building | Planning
Engineering | Public Works
Fire | Traffic

PRCNC20250692

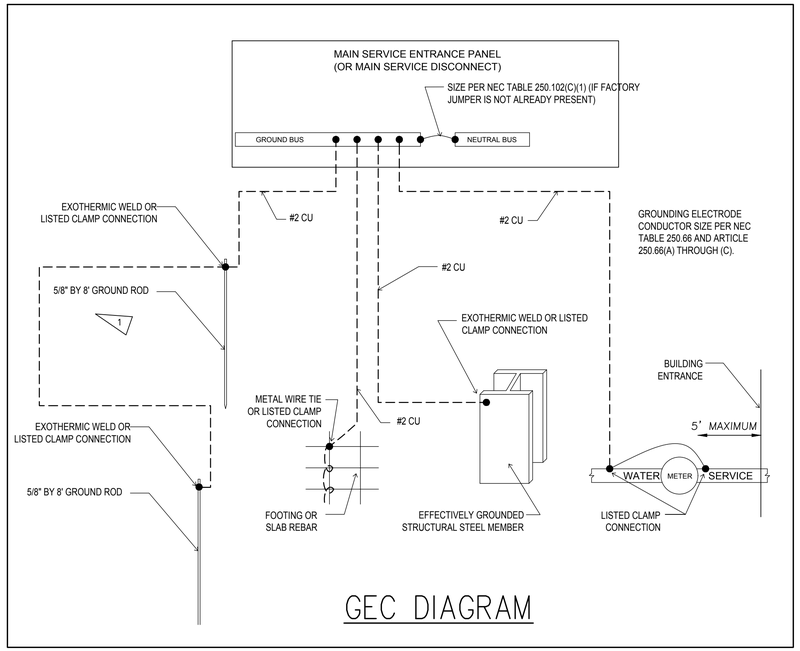

GEC DIAGRAM

GENERAL FEEDER SCHEDULE

ID	FEEDER AMPS	CONDUIT AND FEEDER	NEUTRAL WIRE SIZE	FEEDING THESE DEVICES
(2)	125	1-1/2"C,2#2/0 AL,#2/0 AL N,#4 AL G	#2/0 AL	CH-UNIT
(3)	400	(2)2-1/2"C,3#250kcmil AL,#250kcmil AL N,#1 AL G	#250kcmil AL	CH
(7)	400	(2)2-1/2"C,3#250kcmil AL,#250kcmil AL N	#250kcmil AL	CT CAN, DISC
(8)	100	1-1/2"C,3#1/0 AL,#1/0 AL N,#6 AL G	#1/0 AL-1	POOL

SIZING METHOD: COPPER, 60°C #12 THROUGH #1, 75°C 1/0 AND ABOVE

FEEDER SCHEDULE NOTES:
CONDUIT FILL:
* FOR CONDUIT SIZES 1-1/2" AND BELOW, FILL IS BASED ON EMT.
* FOR CONDUIT SIZES 2" AND ABOVE, FILL IS BASED ON SCHEDULE 40 PVC.

IN LOCATIONS APPROVED FOR THE PURPOSE, CONTRACTOR MAY USE MC CABLE.
IN LOCATIONS APPROVED FOR THE PURPOSE CONTRACTOR MAY USE OTHER CONDUIT TYPES, INCLUDING RMC, FMC AND LFMC. CONTRACTOR REQUIRED TO ENSURE CONDUIT FILL DOES NOT EXCEED 40%.

CONTRACTOR RESPONSIBLE TO ENSURE TERMINATION/LUG CAPACITY FOR ALL SCHEDULED FEEDERS.

XHHW/THHN/THWN SHALL BE USED FOR INSULATION OF THE CONDUCTOR.

GROUNDING NOTES AND REQUIREMENTS:

THE ELECTRICAL CONTRACTOR SHALL COORDINATE WITH THE GENERAL CONTRACTOR, POWER COMPANY, PHONE COMPANY, INTERNET COMPANY, CABLE TV COMPANY, AND THE SATELLITE TV COMPANY TO ENSURE REQUIRED GROUNDING IS INSTALLED FOR EACH SYSTEM.

THIS SHALL BE DONE PRIOR TO AND DURING INSTALLATION OF FOUNDATION RE-BAR AND CONTINUE DURING THE CONSTRUCTION PHASES, TO ENSURE EACH SYSTEM HAS IT'S REQUIRED GROUNDING INSTALLED FOR PROPER OPERATION OF THE SYSTEM.

1. THE ELECTRICAL CONTRACTOR SHALL COORDINATE AND PROVIDE WHAT IS REQUIRED TO DO THE FOLLOWING:
2. FOOTING GROUND RE-BAR COMES UP IN THE ELECTRICAL ROOM AND THE RE-BAR IS SNUGLY SECURED TO THE FOOTING RE-BAR PER OWNER DETAIL.
3. THE MSB GROUNDING TIES TO THE FOOTING RE-BAR, COUNTERPOISE, BUILDING STEEL, AND WATER PIPING.
4. THE GROUND WIRE FOR THE COUNTERPOISE SHALL BE STRANDED, INSULATED WIRE IN CONDUIT UNTIL IT REACHES THE FIRST BAR OF THE COUNTERPOISE. BETWEEN THE COUNTERPOISE BARS IT SHALL BE A STRANDED BARE COPPER WIRE.

FLAG NOTES: (FOR E6.00)

1. GROUNDING ELECTRODE CONDUCTOR AND SYSTEM GROUNDING SIZED PER N.E.C. 250
2. NOT USED
3. PROVIDE 2" CONDUITS FOR SOLAR READY PATHWAY AND RESERVE SPACE FOR FUTURE SOLAR EQUIPMENT. RESERVE SPACE FOR INSTALLATION OF FUTURE SOLAR CIRCUIT BREAKER AND PERMANENTLY MARK THIS LOCATION AS "FOR FUTURE SOLAR ELECTRIC".
   3.1. FOR POOL MECHANICAL ROOM, PROVIDE A 2" CONDUIT TO BOTH THE POOL MECHANICAL ROOM ROOF AND POOL STORAGE ROOF

SHEET NOTES: (FOR E6.00 & E6.01)

A. CONTRACTOR TO OBTAIN UTILITY APPROVAL OF ALL SERVICE AND METERING EQUIPMENT PRIOR TO ORDERING.

B. PROVIDE PERMANENT WARNING LABELS FOR ARC FLASH AND PPE REQUIREMENTS FOR THE SERVICE EQUIPMENT AND PANELS.

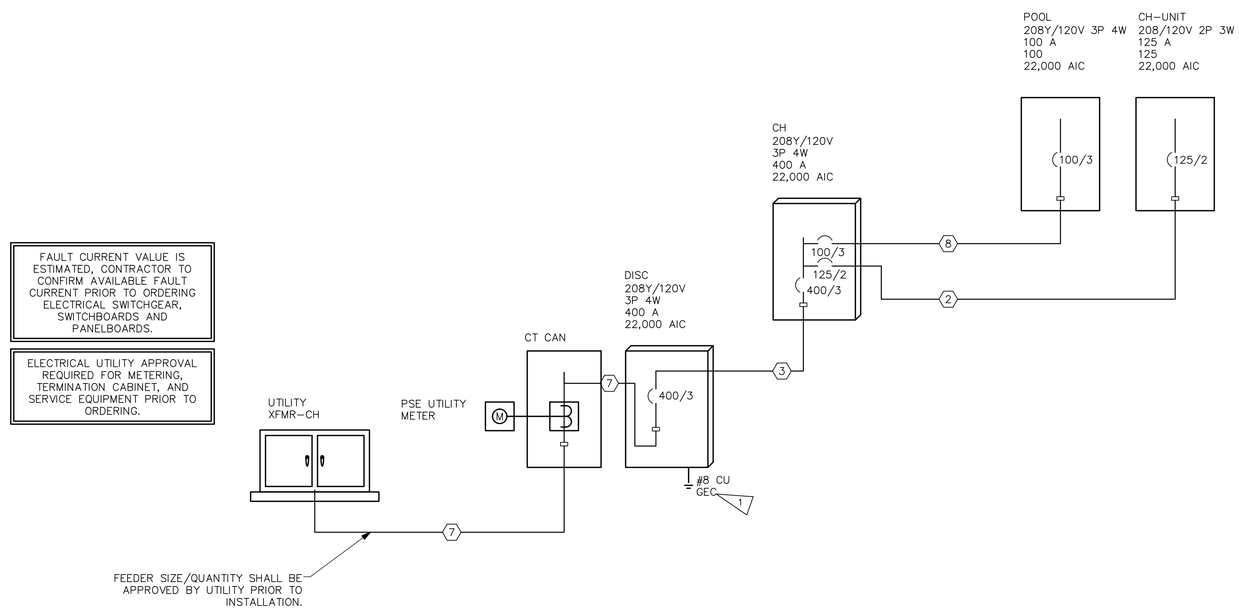

ONE-LINE DIAGRAM

City of Puyallup
Development & Permitting Services
ISSUED PERMIT
Building | Planning
Engineering | Public Works
Fire | Traffic

REVISIONS

NO.	DATE	DESCRIPTION

ROBISON ENGINEERING, INC
19401 40TH AVE W., SUITE 302
LYNNWOOD, WA 98036
206-364-3343 TEL
CONTACT: MARK STEINKE

MARK STEINKE — STATE OF WASHINGTON — 22009 — REGISTERED PROFESSIONAL ENGINEER — 07/01/2025

DRAWN:	DESIGNED:	CHECKED:	APPROVED:
LYSAK K.	LYSAK K.	STEINKE M.	STEINKE M.

PROJECT:
EAST TOWN CROSSING CLUBHOUSE
MULTIFAMILY DEVELOPMENT
PIONEER WAY & SHAW RD. PUYALLUP, WA

ROBISON ENGINEERING, INC
19401 40TH AVE W. SUITE 302
LYNNWOOD, WA 98036
PHONE:(206)364-3343

PERMIT SET
07/02/2025

SHEET TITLE:
ONE-LINE DIAGRAM & NOTES

SHEET NO.
E6.00

PRCNC20250692

FAULT CURRENT SCHEDULE

DEVICE	FAULT	AIC RATING	L–N VOLTS	UTILITY	FED FROM		FEEDER		TOTAL MOTOR
				FAULT	DEVICE	FAULT	SIZE	LENGTH	FAULT
XFMR–CH	39,956	N/A	120V	39,700					256
CT CAN	8,280	22,000	120V	8,019	XFMR–CH	39,700	(2)#250kcmil AL	242'	261
DISC	7,925	22,000	120V	7,664	CT CAN	8,019	(2)#250kcmil AL	13'	261
CH	6,573	22,000	120V	6,311	DISC	7,664	(2)#250kcmil AL	63'	262
CH–UNIT	4,587	22,000	120V	4,486	CH	6,311	#2/0 AL	48'	101
POOL	4,535	22,000	120V	4,436	CH	6,311	#1/0 AL–1	41'	99

Panel **POOL**
ROOM
MOUNTING **FLUSH**
FED FROM **CH**
NOTE
VOLTS **208Y/120V 3P 4W**
BUS AMPS **100**
NEUTRAL **100%**
AIC **22,000**
MAIN BKR **100**
LUGS **STANDARD**

CKT #	CKT BKR	LOAD KVA	CIRCUIT DESCRIPTION		CKT #	CKT BKR	LOAD KVA	CIRCUIT DESCRIPTION
1	20/1	0.18	RECEPTACLE	a	2	–/2	0	SPACE
3	–/2	0	SPACE	b	4	|		
5	|			c	6	–/2	0	SPACE
7	–/2	0	SPACE	a	8	|		
9	|			b	10	–/1	0	SPACE
11	–/1	0	SPACE	c	12	–/1	0	SPACE

	CONN KVA	CALC KVA			CALC KVA
RECEPTACLES	0.18	0.18	(50%>10)	TOTAL LOAD	0.18
				BALANCED 3–PHASE LOAD	0.5 A
				PHASE A	300%
				PHASE B	0%
				PHASE C	0%

Panel **CH**
ROOM
MOUNTING **FLUSH**
FED FROM **DISC**
NOTE
VOLTS **208Y/120V 3P 4W**
BUS AMPS **400**
NEUTRAL **100%**
AIC **22,000**
MAIN BKR **400**
LUGS **STANDARD**

CKT #	CKT BKR	LOAD KVA	CIRCUIT DESCRIPTION		CKT #	CKT BKR	LOAD KVA	CIRCUIT DESCRIPTION
1	20/1	1.49	LIGHTING	a	2	20/1	0.3	CARDIO
3	20/1	0.074	LIGHTING	b	4	20/1	1	TREADMILL
5	20/1	0.097	LIGHTING	c	6	20/1	1	TREADMILL
7	20/1	0.094	LIGHTING	a	8	20/1	1	TREADMILL
9	50/2	8.3	OVEN	b	10	20/1	1	TREADMILL
11	|			c	12	20/1	0.6	CARDIO
13	15/2	0.811	ERV–2	a	14	20/1	0.72	RECEPTACLE
15	|			b	16	20/1	1.32	CARDIO, RECEPTACLE
17	15/1	0.811	ERV–3	c	18	20/1	0.36	RECEPTACLE
19	20/1	0.18	RECEPTACLE	a	20	20/1	0.36	RECEPTACLE
21	15/2	0.811	ERV–1	b	22	20/1	0.36	RECEPTACLE
23	|			c	24	20/1	0.54	RECEPTACLE
25	20/1	0.68	RECEPTACLE, REFRIGERATOR	a	26	20/1	0.72	RECEPTACLE
27	20/1	1.2	DISHWASHER	b	28	20/1	1	MICROWAVE
29	20/1	0.848	POOL LIGHTING	c	30	15/2	1.81	HP–3
31	35/2	6.98	HP–1	a	32	|		
33	|			b	34	20/2	3.41	HP–4
35	35/2	6.98	HP–2	c	36	|		
37	|			a	38	15/2	1.81	HP–5
39	20/2	1.5	BP–1	b	40	|		
41	|			c	42	20/1	0.36	RECEPTACLE
43	20/2	0.1	HWCP–1	a	44	20/1	0.18	RECEPTACLE
45	|			b	46	20/1	0.18	RECEPTACLE
47	60/2	9	WH–1	c	48	20/1	0.5	FACP
49	|			a	50	–/1	0	SPACE
51	–/2	0	SPACE	b	52	–/1	0	SPACE
53	|			c	54	–/1	0	SPACE
55	100/3	0.18	PANEL POOL	a	56	–/1	0	SPACE
57	|			b	58	–/1	0	SPACE
59	|			c	60	–/1	0	SPACE
61	–/1	0	SPACE	a	62	125/2	32.9	PANEL CH–UNIT
63	–/1	0	SPACE	b	64	|		

	CONN KVA	CALC KVA			CONN KVA	CALC KVA	
DWELLING UNIT LIGHTING	8.95	5.08	(35%>3, 25%>120)	ELECTRIC DRYER		4.99	(100%)
DWELLING UNIT	4.45	1,484 SF	(3 VA/SF)	PHASE A–B	4.99	1 DRYER	
SMALL–APPLIANCE	3			PHASE B–C	0	0 DRYERS	
LAUNDRY	1.5			PHASE C–A	0	0 DRYERS	
LIGHTING	2.6	3.25	(125%)	LARGEST MOTOR	6.98	1.75	(25%)
APPLIANCE	5.18	3.88	(75%)	MOTORS	23.4	23.4	(100%)
DWELLING UNIT COOKING		6.4		RECEPTACLES	7.54	7.54	(50%>10)
PHASE A–B	8	1 RANGE		KITCHEN EQUIPMENT	8.3	8.3	(100%)
PHASE B–C	0	0 RANGES		CONTINUOUS	2.1	2.63	(125%)
PHASE C–A	0	0 RANGES		NONCONTINUOUS	4.5	4.5	(100%)
				HEATING	15	15	(100%)
				TOTAL LOAD		86.8	
				BALANCED 3–PHASE LOAD		241 A	
				PHASE A		123%	
				PHASE B		108%	
				PHASE C		68.6%	

Panel **CH–UNIT**
ROOM
MOUNTING **FLUSH**
FED FROM **CH**
NOTE
VOLTS **208/120V 2P 3W**
BUS AMPS **125**
NEUTRAL **100%**
AIC **22,000**
MAIN BKR **125**
LUGS **STANDARD**

CKT #	CKT BKR	LOAD KVA	CIRCUIT DESCRIPTION		CKT #	CKT BKR	LOAD KVA	CIRCUIT DESCRIPTION
1	20/1	0.691	BATH EX FAN, LIGHTING, RECEPTACLE	a	2	40/2	8	RANGE
3	20/1	0.219	LIGHTING, RECEPTACLE	b	4	|		
5	15/1	0.499	ERV–4	a	6	–/2	0	SPACE
7	–/1	0	SPACE	b	8	|		
9	–/2	0	SPACE	a	10	–/2	0	SPACE
11	|			b	12	|		
13	30/2	4.99	DRYER	a	14	20/1	0.7	DISPOSAL
15	|			b	16	20/1	1.5	SMALL APPLIANCE
17	40/2	6	WH–2	a	18	20/1	1.5	SMALL APPLIANCE
19	|			b	20	20/1	1.58	MICRO/HOOD
21	20/1	1.5	WASHER	a	22	20/1	1.63	LIGHTING, RECEPTACLE, SDCO
23	–/1	0	SPACE	b	24	20/1	1.2	DISHWASHER
25	–/1	0	SPACE	a	26	20/1	1.04	LIGHTING, RECEPTACLE
27	–/1	0	SPACE	b	28	20/1	0.912	LIGHTING, MEDIA BOX, RECEPTACLE
29	–/1	0	SPACE	a	30	20/1	0.936	LIGHTING, RECEPTACLE

OPTIONAL DWELLING UNIT CALCULATION (NEC 220.82)

	CONN KVA			CONN KVA	CALC KVA	
LIGHTING AND RECEPTACLES	4.45	1,484 SF (3 VA/SF)	GENERAL LOAD UP TO 10 KVA	10	10	(100%)
SMALL–APPLIANCE	3		OVER 10 KVA	15.9	6.37	(40%)
LAUNDRY	1.5		MAX HEATING OR COOLING		3.9	(220.82(C)(4))
APPLIANCES	8.97		TOTAL LOAD		20.3	
ELECTRIC COOKING	8		BALANCED LOAD		97.4 A	
TOTAL GENERAL LOAD	25.9		PHASE A		108%	
			PHASE B		91.6%	

City of Puyallup
Development & Permitting Services
ISSUED PERMIT
Building | Planning
Engineering | Public Works
Fire | Traffic

XFMR–CH

ROOM
FED FROM **UTILITY**
NOTE
PRIMARY VOLTS **UTILITY**
SECONDARY VOLTS **208Y/120V 3P 4W**
AIC **N/A**
KVA **150**

CKT #	BREAKER TRIP/POLES	CIRCUIT DESCRIPTION	LOAD KVA A	LOAD KVA B	LOAD KVA C	FEEDER RACEWAY AND CONDUCTORS
1	400/3	METER CENTER CT CAN	37.6	32.9	21	(2)2–1/2"C,3#250kcmil AL,#250kcmil AL N
		TOTAL CONNECTED KVA BY PHASE	37.6	32.9	21	

	CONN KVA	CALC KVA			CONN KVA	CALC KVA	
DWELLING UNIT LIGHTING	8.95	5.08	(35%>3, 25%>120)	DWELLING UNIT COOKING		6.4	
DWELLING UNIT	4.45	1,484 SF	(3 VA/SF)	PHASE A–B	8	1 RANGE	
SMALL–APPLIANCE	3			PHASE B–C	0	0 RANGES	
LAUNDRY	1.5			PHASE C–A	0	0 RANGES	
LIGHTING	2.6	3.25	(125%)	ELECTRIC DRYER		4.99	(100%)
APPLIANCE	5.18	3.88	(75%)	PHASE A–B	4.99	1 DRYER	
				PHASE B–C	0	0 DRYERS	
				PHASE C–A	0	0 DRYERS	
				LARGEST MOTOR	6.98	1.75	(25%)
				MOTORS	23.4	23.4	(100%)
				RECEPTACLES	7.54	7.54	(50%>10)
				KITCHEN EQUIPMENT	8.3	8.3	(100%)
				CONTINUOUS	2.1	2.63	(125%)
				NONCONTINUOUS	4.5	4.5	(100%)
				HEATING	15	15	(100%)
				TOTAL LOAD		86.8	
				BALANCED 3–PHASE LOAD		241 A	

REVISIONS

NO.	DATE	DESCRIPTION

ROBISON ENGINEERING, INC
19401 40TH AVE W, SUITE 302
LYNNWOOD, WA 98036
206-364-3343 TEL
CONTACT: MARK STEINKE

MARK STEINKE — STATE OF WASHINGTON — REGISTERED PROFESSIONAL ENGINEER — 07/01/2025

DRAWN:	DESIGNED:	CHECKED:	APPROVED:
LYSAK K.	LYSAK K.	STEINKE M.	STEINKE M.

PROJECT: **EAST TOWN CROSSING CLUBHOUSE**
MULTIFAMILY DEVELOPMENT
PIONEER WAY & SHAW RD. PUYALLUP, WA

ROBISON ENGINEERING, INC
19401 40TH AVE W, SUITE 302
LYNNWOOD, WA 98036
PHONE:(206)364-3343

PERMIT SET
07/02/2025

SHEET TITLE:
PANEL SCHEDULES

SHEET NO.
E6.01

PRCNC20250692

LIGHTING COMPLIANCE SUMMARY

2021 WSEC Compliance Forms for Commercial Buildings including Group R2, R3 & R4 over 3 stories and all R1

Administered by: ©2025 NEEA, All rights reserved

Project & Applicant Information	**Project Title**	East Town Crossing Clubhouse - 2021 WSEC	For Building Department Use: **Date: Jul 01, 2025**
	Project Address	2902 E Pioneer, Puyallup, WA 98372, USA Clubhouse Puyallup, WA 98372	
	Applicant Name	Mark Steinke	
	Applicant Phone	425-686-2008	
	Applicant Email	msteinke@robisonengineering.com	

For questions about this report, contact WSEC Commercial Technical Support at 360-539-5300 or via email at com.technupport@waenergycodes.com

General Occupancy	All Commercial		**General Building Use Type**		Entmt/Assembly, Social/Meeting Hall	**Building Cond. Floor Area**	3,143
General Project Types	New Building	**New Building or Addition Lighting Scope**	Interior Lighting Exterior Lighting	**Alteration Lighting Scope**		**Project Cond. Floor Area**	3,143
						Floors Above Grade	2
						Compliance Method	General Prescriptive
Lighting Project Description							

	Project Type	**Interior / Exterior (Interior includes both interior & parking)**	**Luminaire Replacement Scope**	**Compliance Method**	**LPA Calculation Adjustment**	**Compliance Verification**
Lighting Compliance Scope and Method	New Building	Interior Lighting		Space by space	No Calculation Adjustments selected	**COMPLIES**
	New Building	Exterior Lighting			Not applicable to exterior	**COMPLIES**
Additional Energy Efficiency (AEC) Measures Included	No lighting or electrical additional energy efficiency measures included in project		**Load Management (LDM) Measures Included**		No lighting or electrical load management measures included in project	

Project Title	East Town Crossing Clubhouse - 2021 WSEC	**Date**	**Jul 01, 2025**
Lighting Power Calculation	**NEW BUILDING - INTERIOR LIGHTING**	**Compliance Verification**	**COMPLIES**
Compliance Method	**Space by space**	**LPA Calculation Adjustment**	**none**

Interior Lighting Power Allowance - Space by Space

General Space Type	Specific Space Type	Gross Interior Area (SF)	LPA (Watts/SF)	Total Watts Allowed (SF x LPA x 1)	Total Proposed Watts (LPD + Display LPD)	Compliance Status
Banking activity area	General	182	0.61	111		
Corridors	General	299	0.41	123		
Electrical/mechanical		171	0.43	74		
Lounge/breakroom	General	1,128	0.59	666		
Restroom	General	5,774	0.63	3,638		
Stairwell	General stairwell	150	0.49	NaN		
Gymnasium/fitness center	Exercise area	636	0.90	572		
			Proposed Total LPD		**1,719**	
	Totals			**5,183**	**1,718**	**COMPLIES**

Proposed Lighting Power Density

Fixture Type	Fixture ID	Quantity of Fixtures (#F)	Watts or Wattage Limit per Fixture (WpF)	Total Linear Feet (LF)	Watts per Linear Foot (WpLF)	Total Watts Proposed (#F x WpF) or (LF x WpLF)
Individual Fixtures						
Horizontal surface-mount	B22	3	23			69
Recessed downlight	C1	39	17			663

Recessed downlight	C1E	8	17			136
Recessed downlight	C1	17	17			289
Recessed downlight	C1E	16	17			272
Wall-mounted	LF-9	6	12			72
Linear Fixtures						
LED strip	B1	4	31			126
LED strip	S1E	2	46			92
					Proposed Total LPD	**1,719**

Project Title	East Town Crossing Clubhouse - 2021 WSEC	**Date**	**Jul 01, 2025**
Proposed Fixtures Details	**NEW BUILDING - INTERIOR LIGHTING**		

Fixture Type/Application	Fixture ID	Location in Documents	Lamp Type	New or Existing-to-Remain
Individual Fixtures				
Horizontal surface-mount	B22	E1.01	LED	New
	Fixture Description: 2X2 SURFACE MOUNT - OFFICES			Are these fixtures located within a daylight zone?: Yes, controls provided
	Daylight zone location(s): Sidelit daylight zones (primary and/or secondary)			Do these fixtures require specific application lighting controls?: None required
Recessed downlight	C1	E1.01	LED	New
	Fixture Description: 8" SURFACE DOWNLIGHT			Are these fixtures located within a daylight zone?: No
	Do these fixtures require specific application lighting controls?: None required			
Recessed downlight	C1E	E1.01	LED	New
	Fixture Description: 8" SURFACE DOWNLIGHT - CORRIDORS EMERGENCY DRIVER BACKUP			Are these fixtures located within a daylight zone?: No
	Do these fixtures require specific application lighting controls?: None required			
Recessed downlight	C1	E1.01	LED	New
	Fixture Description: 8" SURFACE DOWNLIGHT			Are these fixtures located within a daylight zone?: Yes, controls provided
	Daylight zone location(s): Sidelit daylight zones (primary and/or secondary)			Do these fixtures require specific application lighting controls?: None required
Recessed downlight	C1E	E1.01	LED	New
	Fixture Description: 8" SURFACE DOWNLIGHT - CORRIDORS EMERGENCY DRIVER BACKUP			Are these fixtures located within a daylight zone?: Yes, controls provided
	Daylight zone location(s): Sidelit daylight zones (primary and/or secondary)			Do these fixtures require specific application lighting controls?: None required
Wall-mounted	LF-9	E1.01	LED	New
	Fixture Description: DAINOLITE, CORVETTE LED VANITY LIGHT, MATTE BLACK			Are these fixtures located within a daylight zone?: No
	Do these fixtures require specific application lighting controls?: None required			
Linear Fixtures				
LED strip	B1	E1.01	LED	New
	How is linear fixture quantity defined?: Quantity of fixtures with current limiting device			Length of track (LT):
	Fixture Description: 4' NARROW WRAP - BOH			Are these fixtures located within a daylight zone?: No
	Do these fixtures require specific application lighting controls?: None required			
LED strip	S1E	E1.01	LED	New
	How is linear fixture quantity defined?: Quantity of fixtures with current limiting device			Length of track (LT):
	Fixture Description: 4' STAIRWELL STRIP - INTEGRAL OCCUPANCY SENSOR - EM BATTERY BACKUP			Are these fixtures located within a daylight zone?: No
	Do these fixtures require specific application lighting controls?: None required			

Project Title	East Town Crossing Clubhouse - 2021 WSEC	**Date**	**Jul 01, 2025**
Lighting Power Calculation	**NEW BUILDING - EXTERIOR LIGHTING**	**Compliance Verification**	**COMPLIES**
Exterior Lighting Zone	**ZONE 3**	**Base Site Allowance**	**400**

Exterior Lighting Power Allowance

Exterior Surface	Surface Sub-Type	Surface Area (SF)	LPA (Watts/SF)	Linear Feet (LF)	LPA (Watts/LF)	Total Watts Allowed (LPA x SF) or (LPA x LF)	Total Proposed Watts	Compliance Status
Building grounds	Special features	6,400	0.10			640		

Base Site Allowance	400		
Totals	1,040	848	COMPLIES

Proposed Exterior Lighting Power Density

Fixture Type	Fixture ID	Exterior Surface Type	Quantity of Fixtures (#F)	Watts or Wattage Limit per Fixture (WpF)	Total Linear Feet (LF)	Watts per Linear Foot (WpLF)	Total Watts Proposed (#F x WpF) or (LF x WpLF)
Individual Fixtures							
Pole-mounted	SP24R	Building grounds - Special features	8	106			848
						Proposed Total LPD	**848**

City of Puyallup
Development & Permitting Services
ISSUED PERMIT

Building	Planning
Engineering	Public Works
Fire	Traffic

REVISIONS

NO.	DATE	DESCRIPTION

ROBISON ENGINEERING, INC
19401 40TH AVE W, SUITE 302
LYNNWOOD, WA 98036
206-364-3343 ITL
CONTACT: MARK STEINKE

MARK STEINKE — STATE OF WASHINGTON — 22527 — REGISTERED PROFESSIONAL ENGINEER — 07/01/2025

DRAWN: LYSAK K. | DESIGNED: LYSAK K. | CHECKED: STEINKE M. | APPROVED: STEINKE M.

PROJECT: **EAST TOWN CROSSING CLUBHOUSE**
MULTIFAMILY DEVELOPMENT
PIONEER WAY & SHAW RD. PUYALLUP, WA

ROBISON ENGINEERING, INC
19401 40TH AVE W, SUITE 302
LYNNWOOD, WA 98036
PHONE:(206)364-3343

PERMIT SET
07/02/2025

SHEET TITLE:
LIGHTING COMPLIANCE FORMS

SHEET NO.
E8.00

PRCNC20250692

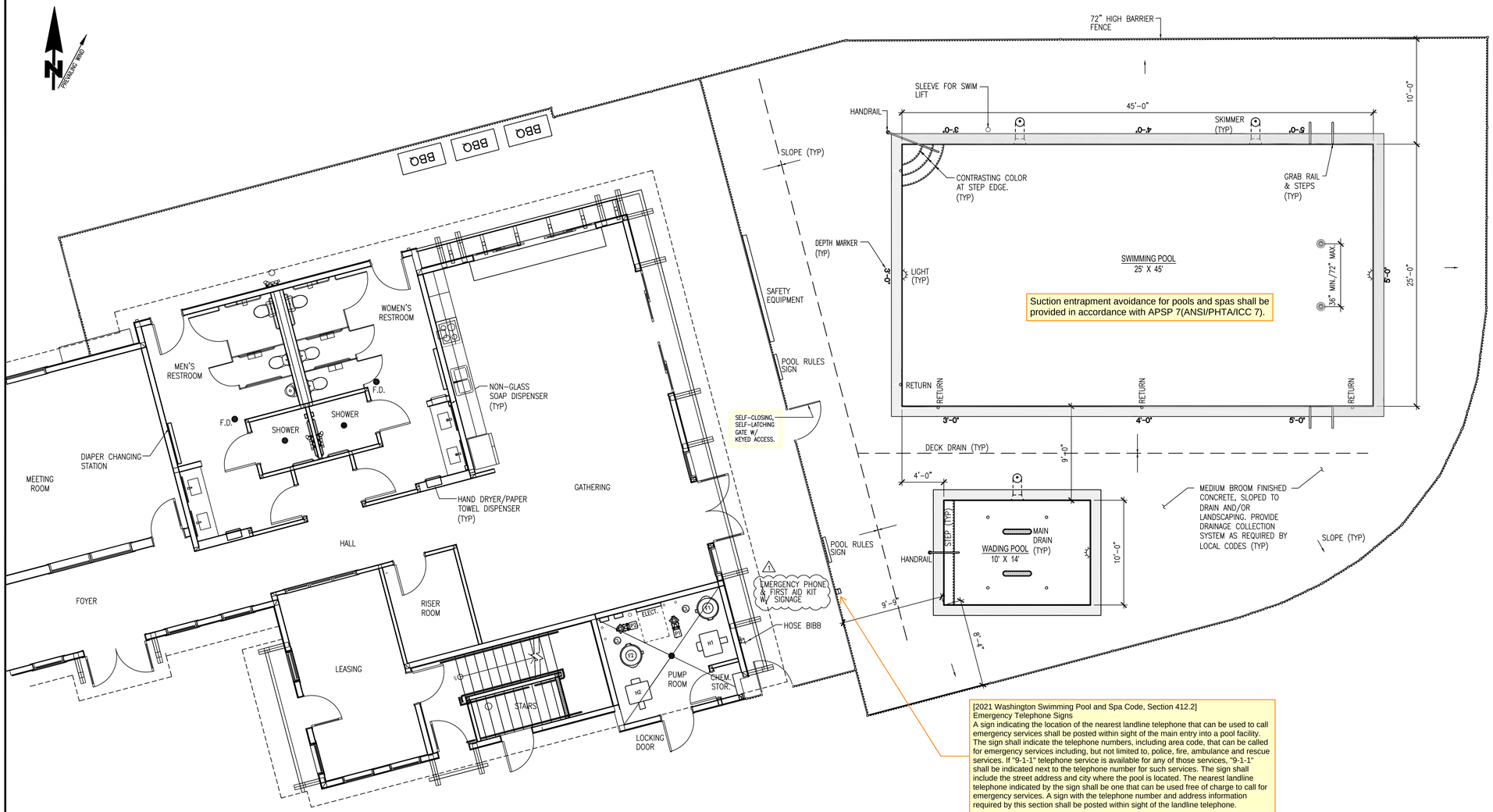

[2021 Washington Swimming Pool and Spa Code, Section 412.2]
Emergency Telephone Signs
A sign indicating the location of the nearest landline telephone that can be used to call emergency services shall be posted within sight of the main entry into a pool facility. The sign shall indicate the telephone numbers, including area code, that can be called for emergency services including, but not limited to, police, fire, ambulance and rescue services. If "9-1-1" telephone service is available for any of those services, "9-1-1" shall be indicated next to the telephone number for such services. The sign shall include the street address and city where the pool is located. The nearest landline telephone indicated by the sign shall be one that can be used free of charge to call for emergency services. A sign with the telephone number and address information required by this section shall be posted within sight of the landline telephone.

Swimming Pool to be Permitted Separately.

POOL PLAN 1/1
3/16" = 1'-0"

SWIMMING POOL CHARACTERISTICS

DESCRIPTION	POOL
DESIGNATION	LIMITED USE
DIMENSIONS (feet)	25 X 45
DEPTH (feet)	3.0 TO 5.0
SURFACE AREA (sf):	
SHALLOW END	1,125
DEEP END	0
TOTAL	1,125
VOLUME (gallons)	33,000
TURNOVER (hours)	5.1 @ 110 GPM
FILTER AREA (sf)	580
FILTER RATE (gpm/sf)	0.19 @ 110 GPM
BATHER LOAD	50
POOL COLOR	ARTIC WHITE

SWIMMING POOL EQUIPMENT

DESCRIPTION	POOL
FILTER (F1)	JANDY CL SERIES CL580 580 SF CARTRIDGE, NSF
PUMP (P1)	JANDY EPUMP VSSHP270DV2AS, 2.7 HP 208/230V, 1.5/10.5A
HEATER (H1)	JANDY JXI400NK, NAT GAS 399K BTU, W/ 84% EFFICIENCY PER WSEC C404.10 120V/240V, 5/2.5A
CHEMICAL FEEDER	PENTAIR RAINBOW 300-29K SOLID CHLORINE TABLET FEEDER, NSF
CHEMICAL CONTROLLER	-- --
MAIN DRAINS (2)	AQUASTAR A10RCFR101, 10" ROUND W/ FIELD FABRICATED SUMP, 31.5 SQ. INCH OPENING AREA
SKIMMERS (2)	BERMUDA W/ WEIR & BASKET NO EQUALIZER LINE
INLETS (4)	WALL (DIRECTIONAL)
LIGHTS (2)	PENTAIR ARCHITECTURAL LED, 120 VOLT
FLOW METER (2)	FLOWVIS FV-25 (2.5"ø)
PRESSURE/VACUUM GAUGES	TWO PRESSURE/ONE VACUUM
HANDRAILS	ONE SET
GRAB RAILS & INSERT STEPS	TWO SETS
STEP INSERTS	TWO SETS
AUTO-FILL	MP INDUSTRIES OR EQUAL
SPARE PARTS	FILTER CARTRIDGES

WADING POOL CHARACTERISTICS

DESCRIPTION	POOL
DESIGNATION	LIMITED USE
DIMENSIONS (feet)	10 X 14
DEPTH (feet)	1.0
SURFACE AREA (sf):	140
VOLUME (gallons)	1,000
TURNOVER (minutes)	16.7 @ 60 GPM
FILTER AREA (sf)	340
FILTER RATE (gpm/sf)	0.18 @ 60 GPM
BATHER LOAD	15
POOL COLOR	ARTIC WHITE

WADING POOL EQUIPMENT

DESCRIPTION	POOL
FILTER (F2)	JANDY CL SERIES CL340 340 SF CARTRIDGE, NSF
PUMP (P2)	JANDY FLOPRO VSFHP185DV2AS, 1.85 HP 208/230V, 8.5/8.0A
HEATER (H2)	JANDY JXI200NK W/ 84% EFFICIENCY PER WSEC C404.10 120/240V, 5/2.5A
CHEMICAL FEEDER	PENTAIR RAINBOW 300 SOLID CHLORINE TABLET FEEDER, NSF
CHEMICAL CONTROLLER	-- --
MAIN DRAINS (2)	AQUASTAR 32CDFL101 W/ MANUFACTURED, 25.9 SQ. INCH OPENING AREA
SKIMMER	BERMUDA W/ WEIR & BASKET NO EQUALIZER
INLETS (4)	FLOOR
LIGHT	JANDY "NICHELESS" LED
FLOW METER	FLOWVIS FV-2 (2"ø)
PRESSURE/VACUUM GAUGES	TWO PRESSURE/ONE VACUUM
HANDRAILS	ONE SET
GRAB RAIL	NONE
STEP INSERTS	NONE
AUTO-FILL	MP INDUSTRIES OR EQUAL
SPARE PARTS	FILTER CARTRIDGES

MISCELLANEOUS EQUIPMENT

ITEM	DESCRIPTION
RESCUE POLE (1)	ONE STRAIGHT POLE, 12' MIN. W/ LIFE HOOK
RESCUE POLE (1)	12' TO 15' TELESCOPIC
LIFE RING (1)	24"ø RING W/ 50' ROPE
TEST KIT	DPD - TAYLOR
THERMOMETERS	1
SKIMMER, VACUUM & HOSE	1 EACH (30' X 1-1/2"ø HOSE)
WALL BRUSH	ONE 18"
FIRST AID KIT	ONE 24-UNIT
SIGNS	WA STATE POOL AND WADING POOL RULES "EMERGENCY 911" "NO LIFEGUARD"
POOL COVER	MANUAL, VAPOR RETARDANT, FLOATING
ADA LIFT	AQUA CREEK PRODUCTS RANGER II

DISTANCE TO FURTHEST UNIT: > 1/4 MILE
NUMBER OF FLOORS: 3
FACILITY REQUIREMENTS: DIAPER STATIONS, SHOWERS, REST ROOMS

SCOPE OF WORK:

CONSTRUCT NEW OUTDOOR SWIMMING POOL AND WADER FOR NEW LIVING COMMUNITY.

DEPTH MARKER LEGEND

MARK	DEPTH	LETTER SIZE	COLOR
A	1'-0"	4" MINIMUM	CONTRASTING
B	3'-0"	4" MINIMUM	CONTRASTING
C	4'-0"	4" MINIMUM	CONTRASTING
D	5'-0"	4" MINIMUM	CONTRASTING
–	–	–	–
–	–	–	–

NOTES:
1. PROVIDE DEPTH MARKERS IN ENGLISH UNITS.
2. PLACE NON-SLIP MARKERS ON THE DECK AND POOL SIDEWALL.
3. PLACE "NO DIVING" MARKERS ALONG DECK AND SIGNAGE ON WALLS.

City of Puyallup
Development & Permitting Services
ISSUED PERMIT
Building | Planning
Engineering | Public Works
Fire | Traffic

REVISIONS
1 06-30-2025 PER COP REVIEW
2
3
4
5
6
7
8
9
10

ENGINEERING CONSULTANTS NORTHWEST
811 PORTER WAY
MILTON, WA 98354
(253) 952-7797
FAX (253) 952-7799

JOSEPH J. DOMINGUEZ
STATE OF WASHINGTON
21565
REGISTERED
PROFESSIONAL ENGINEER
03-26-25

CLIENT
PLEASURE POOLS AND SPAS
5414 175TH AVENUE COURT EAST
PUYALLUP, WA 98101
(253) 840-9292

PROJECT
EAST TOWN CROSSING
PUYALLUP, WA
NEW SWIMMING POOL AND WADING POOL

DATE 03-26-25
DRAWN J.M.A.
DESIGNED J.J.D.
APPROVED J.J.D.
PROJECT NO. 2252761
SHEET NO. SP 1
1 Of 6 Sheets

P:\2025\2025\2252761-1 1=4.53 07-03-25 JMA

PRCNC20250692

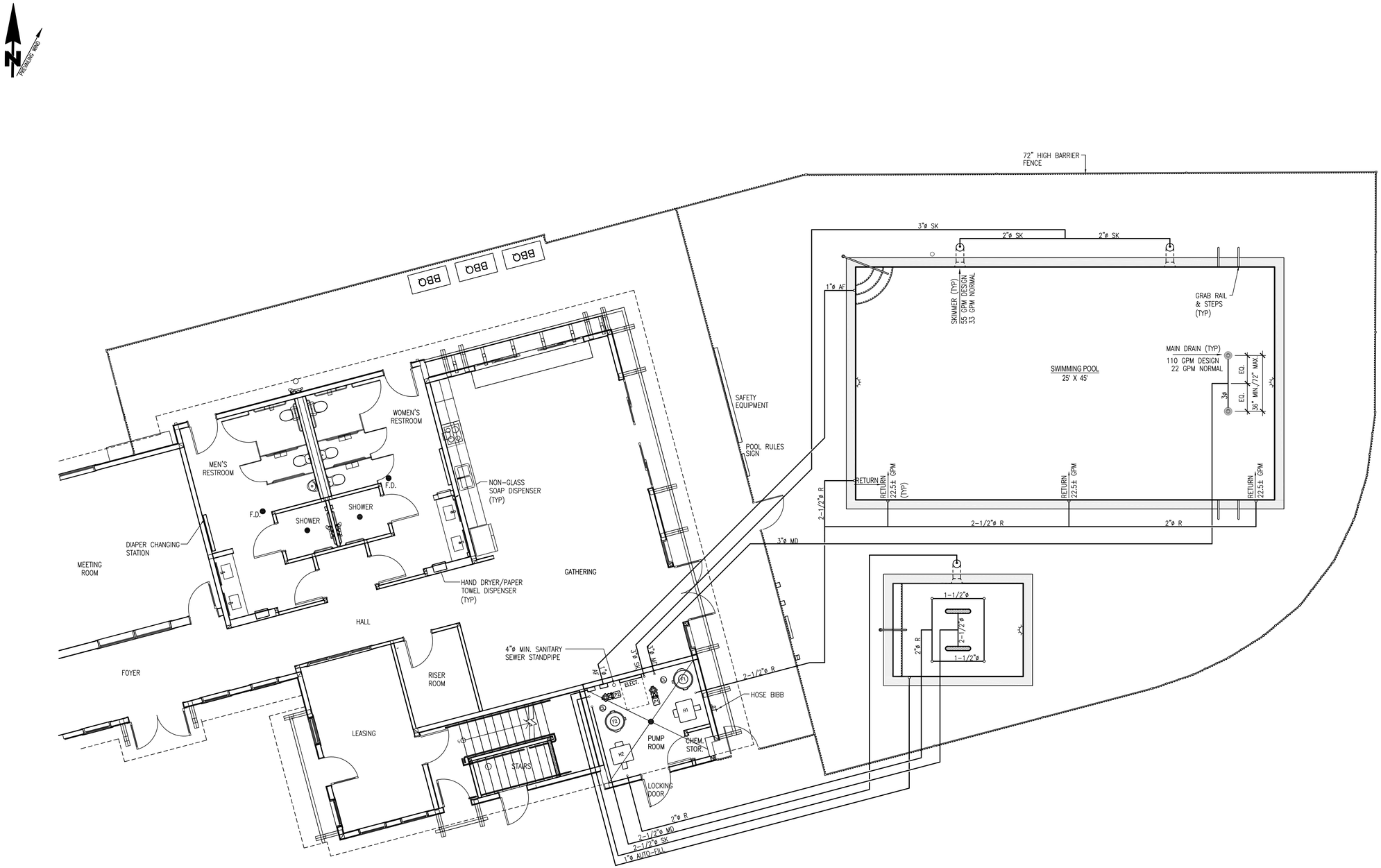

Swimming Pool to be Permitted Separately.

POOL PIPING PLAN

3/16" = 1'-0"

1 SP2 SP2

City of Puyallup
Development & Permitting Services
ISSUED PERMIT
Building | Planning
Engineering | Public Works
Fire | Traffic

REVISIONS

ENGINEERING CONSULTANTS NORTHWEST
811 PORTER WAY
MILTON, WA 98354
(253) 952-7797
FAX (253) 952-7799

JOSEPH J. DOMINEZYK
STATE OF WASHINGTON
21428
REGISTERED PROFESSIONAL ENGINEER
03-26-25

CLIENT
PLEASURE POOLS AND SPAS
5414 71ST AVENUE COURT EAST
PUYALLUP, WA 98101
(253) 840-9292

PROJECT
EAST TOWN CROSSING
PUYALLUP, WA

POOL PIPING PLAN

DATE	03-26-25
DRAWN	J.M.A.
DESIGNED	J.J.D.
APPROVED	J.J.D.
PROJECT NO.	2252761
SHEET NO.	SP 2

2 Of 6 Sheets

POOLS\2023\2252761-1 1=5.33 07-3-25 JMA

PRCNC20250692

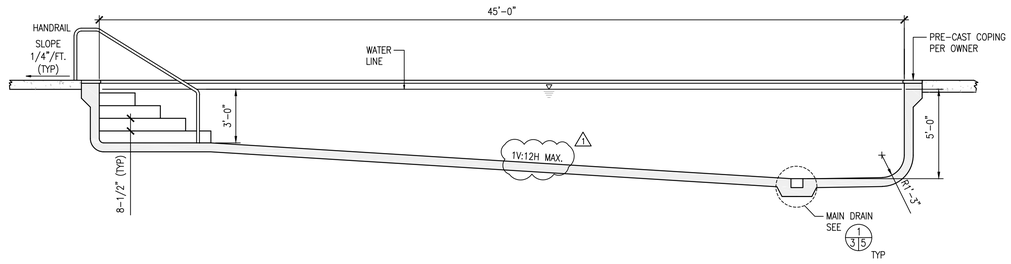

POOL SECTION
1/4" = 1'-0" — A/1|3

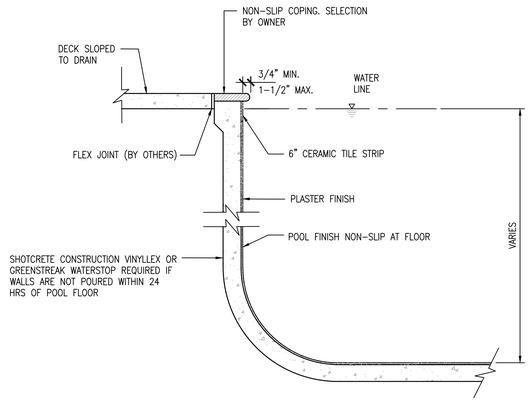

POOL EDGE DETAIL
NTS — 1/3|3

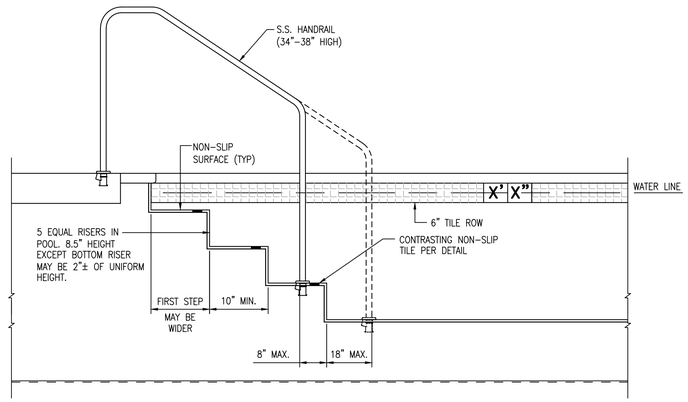

STEP/HANDRAIL DETAIL
NTS — 2/3|3

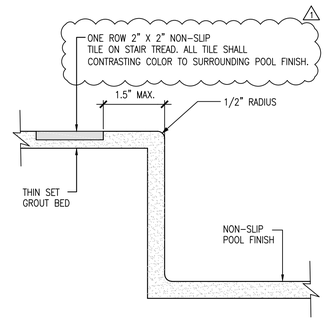

STEP EDGE DETAIL
NTS — 3/3|3

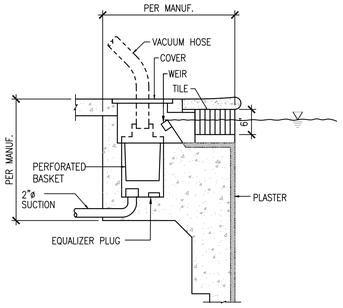

SKIMMER DETAIL
NTS — 4/3|3

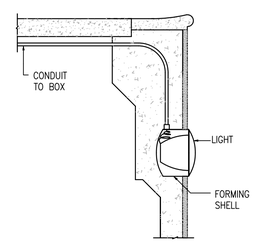

NOTE:
UNDERWATER LIGHTING SHALL BE BONDED AND GROUNDED IN CONFORMANCE WITH NFPA 70-2014 ELECTRICAL CODE SECTION 680.26(B)(4).

UNDERWATER LIGHT DETAIL
NTS — 5/3|3

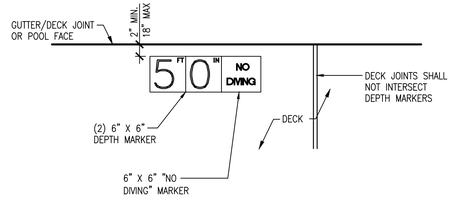

NOTES:
1. DEPTH SHALL BE VERIFIED BY CONTRACTOR AND MARKERS SHALL BE INSTALLED TO TO INDICATE ACTUAL DEPTH OF WATER.
2. DEPTH MARKERS SHALL BE SPACED AT NOT MORE THAN 25'-0" INTERVALS MEASURED PERIPHERALLY. REFER TO PLAN FOR APPROXIMATE LOCATION.
3. TILES SHALL BE RECESSED SO THAT THE FACE OF THE TILE IS FLUSH WITH THE FINISHED SURFACE.
4. DEPTH AND "NO DIVING" MARKERS SHALL BE 6" X 6", WHITE, NON-SLIP TILE WITH 4" HIGH BLACK NUMERALS OR RED INTERNATIONAL "NO DIVING" SYMBOL.
5. DIMENSION OF TILE DEPTH MARK ON GUTTER/DECK JOINT OR POOL FACE TO BE SAME, 6" X 6".

DEPTH MARKER DETAIL
1/4" = 1'-0" — 6/3|3

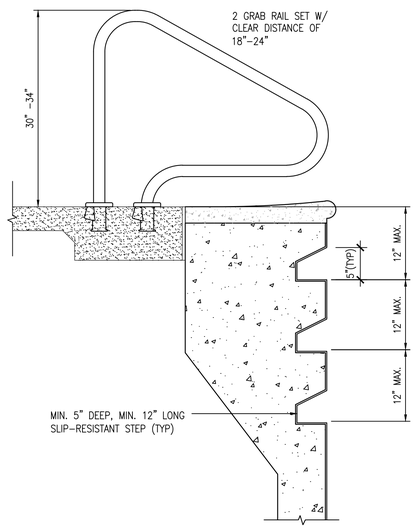

GRAB RAIL AND STEPS
NTS — 7/3|3

City of Puyallup
Development & Permitting Services
ISSUED PERMIT
Building | Planning
Engineering | Public Works
Fire | Traffic

Swimming Pool to be Permitted Separately.

REVISIONS
1 06-30-25 PER COP REVIEW
2
3
4

811 PORTER WAY
MILTON, WA 98354
(253) 952-7797
FAX (253) 952-7799
ENGINEERING CONSULTANTS NORTHWEST

JOSEPH J. DOMINA — STATE OF WASHINGTON — 21548 — REGISTERED PROFESSIONAL ENGINEER
06-20-25

CLIENT
PLEASURE POOLS AND SPAS
5414 175TH AVENUE COURT EAST
PUYALLUP, WA 98101
(253) 840-9292

PROJECT
ROYAL VALLEY
BREMERTON, WA
POOL DETAILS

DATE	06-20-25
DRAWN	J.M.A.
DESIGNED	J.J.D.
APPROVED	J.J.D.
PROJECT NO.	2252800
SHEET NO.	SP3

3 Of 6 Sheets

POOLS\2025\2252800-SP3 1=4 06-30-25 JMA

PRCNC20250692

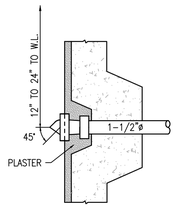

WALL INLET DETAIL — 1 — NTS — 4|4

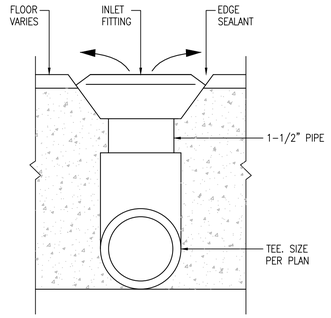

FLOOR INLET DETAIL — 2 — NTS — 4|4

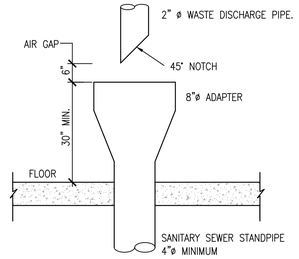

NOTE:
1. INCLUDE P-TRAP ON SEWER STANDPIPE.
2. POOL WATER TO BE DECHLORINATED TO A CONCENTRATION OF 0.1 PARTS PER MILLION OR LESS AND pH-ADJUST WATER IF NECESSARY PRIOR TO DISCHARGE TO SANITARY SEWER. MAXIMUM DISCHARGE RATE APPROXIMATELY 10 GPM.

WASTE DISCHARGE — 3 — NTS — 4|4

POOL RULES

- WHEN LIFEGUARDS OR ATTENDANTS ARE NOT PRESENT:
  - CHILDREN AGE 12 AND UNDER NEED TO BE ACCOMPANIED BY A RESPONSIBLE ADULT (AGE 18 & OVER) AT ALL TIMES THE CHILD IS AT THE POOL
  - BATHERS AGE 13–17 MUST NOT USE POOL ALONE
- EVERYONE MUST TAKE A CLEANSING SHOWER BEFORE USING POOL
- BATHERS WEARING DIAPERS NEED TO HAVE TIGHT FITTING PROTECTIVE COVERINGS
- DIAPERS MUST BE CHANGED IN DESIGNATED DIAPER CHANGING AREA OR RESTROOMS
- IF YOU HAVE A COMMUNICABLE DISEASE THAT CAN BE TRANSMITTED BY WATER OR HAVE BEEN ILL WITH DIARRHEA OR VOMITING IN THE LAST TWO WEEKS, DO NOT USE THE POOL
- BATHERS WITH SEIZURE, HEART OR CIRCULATORY PROBLEMS ARE ADVISED TO SWIM WITH A BUDDY
- DO NOT USE POOL WHEN UNDER THE INFLUENCE OF ALCOHOL OR DRUGS
- NO RUNNING ON DECK OR HORSEPLAY IN THE POOL
- NO FOOD OR DRINKS ARE ALLOWED IN THE POOL WATER
- PERSONS FAILING TO FOLLOW RULES ARE SUBJECT TO REMOVAL FROM THE PREMISES

MAXIMUM BATHER CAPACITY: _____

IN AN EMERGENCY CALL 911

CLOSEST PHONE FOR EMERGENCY USE IS LOCATED AT: _____

FIRST AID KIT LOCATED AT: _____

POOL RULES — 6 — NTS — 4|4

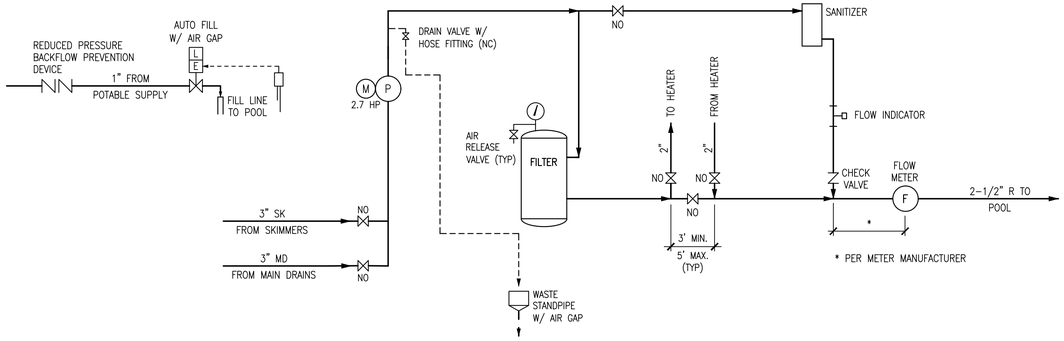

POOL PIPING SCHEMATIC — 4 — NTS — 4|4

LEGEND

P	PUMP
M	ELECTRIC MOTOR
F	FLOW METER
	MANUAL VALVE (NO = NORMALLY OPEN) (NC = NORMALLY CLOSED)
E	ELECTRICALLY OPERATED VALVE
S	SENSOR
T	THERMOMETER
L	LEVEL CONTROLLED
	PRESSURE GAUGE
	CHECK VALVE

City of Puyallup Development & Permitting Services ISSUED PERMIT
Building | Planning | Engineering | Public Works | Fire | Traffic

Swimming Pool to be Permitted Separately.

REVISIONS
1
2
3
4

811 PORTER WAY
MILTON, WA 98354
(253) 952-7797
FAX (253) 952-7799
ENGINEERING CONSULTANTS NORTHWEST

JOSEPH J. DOMINICK — STATE OF WASHINGTON — 21349 — REGISTERED PROFESSIONAL ENGINEER
06-20-25

CLIENT
PLEASURE POOLS AND SPAS
5414 71ST AVENUE COURT EAST
PUYALLUP, WA 98371
(253) 840-9292

PROJECT
ROYAL VALLEY
BREMERTON, WA
POOL DETAILS

DATE 06-20-25
DRAWN J.M.A.
DESIGNED J.J.D.
APPROVED J.J.D.
PROJECT NO. 2252800
SHEET NO. SP4
4 Of 6 Sheets

POOLS\2025\2252800-SP3 1=4 06-25-25 JMA

PARAMETER	POOL RECIRCULATION
A – MANIFOLD PIPE DIAMETER (INCHES)	3
B – SUMP DEPTH (INCHES)	2 MIN. (4.5 PREFERRED)
E – MINIMUM PIPE OFFSET (INCHES)	2.5
F – LENGTH BEFORE PIPE REDUCTION (INCHES)	16 MIN.
W – SUMP OPENING (INCHES)	8–3/4 ROUND
SUMP TYPE	FIELD FABRICATED
SUCTION COVER	PARAMOUNT SDX2
COVER OPEN AREA (SQ. INCHES)	43.2
NUMBER OF COVERS	2 FLOOR
TOTAL COVER OPEN AREA (SQ. INCHES)	86.4
CERTIFIED MAXIMUM FLOW CAPACITY (GPM) BASED ON PIPE ORIENTATION IN SUMP	178
DESIGN FLOW (GPM) (100% PER COVER)	110
APSP–7 DESIGN FLOW (100% PER COVER) (GPM)	110
VELOCITY AT APSP–7 FLOW THROUGH COVER (FPS)	0.82
MANIFOLD VELOCITY AT APSP–7 FLOW (FPS)	4.8

NOTES:

1. MAIN DRAIN LOCATED AT LOWEST POINT IN POOL.
2. MANIFOLD EXTENDS FROM COVER CONNECTION TO COVER CONNECTION INCLUDING THE TEE FITTING.
3. CONTRACTOR TO CONFIRM PUMP FLOWS AFTER COMPLETION OF WORK TO VERIFY VALUES ABOVE ARE NOT EXCEEDED.

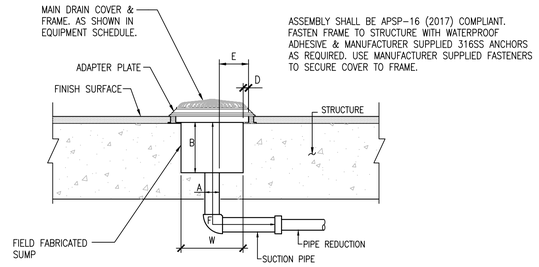

POO L MAIN DRAIN DETAIL

NTS 1 / 3 5

PRCNC20250692

1 CONFORMANCE
All material and construction methods shall conform to Chapter 246–260 WAC, "Water Recreation Facilities" published by the Washington State Department of Health, 2021 International Building Code, International Electrical Code and International Building Code, International Mechanical Code, 2017 ICC A117.1, 2010 ASCE 7–10, 2021 Washington State Energy Code, latest editions, as modified by the local agency having jurisdiction. Comply with IBC Sections 1910.4.3, 1910.5, 1910.9 and 1910.10.

CONCRETE
Shotcrete: 1 part cement, 4–1/2 parts sand, based on dry and loose volume; 4,000 psi @ 28 days. Portland Cement Type I or II, ASTM C–150, seven sack mix.

REINFORCEMENT
Reinforcing steel, deformed intermediate grade, fy = 40,000 psi, ASTM A–15. Lap splices 40 diameters; support on concrete blocks and tie with 16 gage annealed wire; 2" minimum cover between earth and steel. Non–contact splices – minimum 2 inch clear between bars. Contact splices must be constructed with the bars aligned so that a line through the center of the two spliced bars is perpendicular to the surface of the surface of the surface of the shotcrete work.

CONSTRUCTION
Maximum length of pool without control joint is 60'–0". Shotcrete is to be placed monolithic and pneumatically.

BARRIERS
Barrier protection shall be provided to prevent unauthorized access to pool facilities including:
1. Owners shall provide barriers to prevent unauthorized persons from gaining access to pools. Spray pool facilities without standing water are exempt from barrier requirements of this section.
2. Barriers at limited use pools must be at least sixty inches high.
3. Barriers at general use pools must be at least seventy–two inches high.
4. Barriers, including windows, may not:
   a. Have spaces between vertical members greater than a width of one and three–quarter inches if the distance between the tops of horizontal members are spaced less than forty–five inches apart.
5. Solid barriers may not have indentations or protrusions, other than normal construction tolerances and masonry joints.
6. Barriers must have self–closing, self–latching gates or doors that provide either:
   a. A mechanism that uses a continuously locked latch, coded lock or
   b. other equivalent access control system that always requires a key or code to enter pool area. If the latch is less than sixty inches from the ground, the barrier must have an eighteen–inch radius of solid material around the latch to preclude a child on the outside of the barrier from reaching through the gate or barrier and opening the latch and entering the pool; or a latch height of sixty inches or more from the ground.
7. Restricted area service entrances are exempt from door or gate requirements provided that no public access is available.
8. Lifeguarded pools are not required to have a self–closing, self–latching gate during the period a pool is in use. Facility gates shall be closed and locked during nonuse periods. Barrier heights are measured on the side outside the pool enclosure area.
9. Owners shall ensure that surrounding ground levels, structures, or landscaping do not reduce the effective height of the barrier.

STEPS
Edge of pool steps shall be of contrasting color from body of pool. Steps shall be of non–slip tread finish. Steps shall have a minimum ten inch unobstructed, horizontal tread depth and a minimum two–hundred forty square inch surface area. Pool risers shall have an uniform height between 7.5 inches (preferred) and 10 inches, except for the bottom riser which may be plus or minus 2 inches of the uniform height. Spa risers shall be similar to those for the pools, except for the bottom riser which may be less than uniform height. See Pool/Spa Section or Step Detail for step requirements.

BONDING
All metallic components of the pool shall be bonded and grounded in conformance to the National Fire Protection Association Electrical Code section 680.26(B).

OPERATION OF POOL
It is the owner's responsibility to operate in compliance with rules and regulations of the Washington State Department of Health.

DISABILITY ACCESS
Provide "person with disability" access per applicable regulations.

DRINKING FOUNTAINS
Provide drinking fountains per Architectural Plans. (By Others) Note: See Architectural Plans for Building, Fence, Electrical, Ventilation and Mechanical Details.

BACKFLOW PREVENTION
Provide non–atmospheric backflow prevention devices on plumbing fixtures connected to the potable water system which serve the pool related facilities.

INSULATION
Provide insulation on exposed recirculation system within the contained space per WSEC Section 403.2.9 for pools and spas heated to greater 95° F. Pool design temperature = 83°F.

ENERGY CODE
Provide pool/spa equipment, covers, piping insulation, motors, etc. in accordance with the applicable portions of WSEC Sections C404.11.1 through C404.11.4

C404.10.1 Heaters. Heat pump pool heaters shall have a minimum COP of 4.0 determined in accordance with ASHRAE Standard 146. Other pool heating equipment shall comply with the applicable efficiencies in Section C404.2. The electric power to all heaters shall be controlled by a readily accessible on–off switch that is an intergral part of the heater, or external to and within 3 feet of the heater. Operation of such switch shall not change the setting of the heater thermostat. Such switches shall be in addition to a circuit breaker for the power to the heater. Gas fired heaters shall not be equipped with constant burning pilot lights.

C404.10.2 Time Switches. Time switches or other control method that can automatically turn off and on heaters and pump motors according to a preset schedule shall be installed for heaters and pump motors. Heaters and pump motors that have built in time switches shall be in compliance with this section.
Exceptions:
1. Where public health standards require 24–hour pump operation.
2. Pumps that are required to operate solar–and–waste–heat–recovery pool heating systems.

C404.10.3 Covers. Heated pools and in–ground permanent spas shall Pools heated to more than 90°F shall have a pool cover with a minimum insulation value of R–12, and the sides and bottom of the pool shall also have a minimum insulation value of R–12.

C404.10.4 Heat Recovery. Heated indoor swimming pools, spas or hot tubs with water surface area greater than 200 square feet shall provide for energy conservation by an exhaust air heat recovery system that heats ventilation air, pool water or domestic hot water. The heat recovery system shall be configured to decrease the exhaust air temperature at design heating conditions (80°F indoor) by 36°F (10°C).
Exception: Pools, spas or hot tubs that include system(s) that provide equivalent recovered energy on an annual basis through one of the following methods:
1. Renewable energy;
2. Dehumidification heat recovery;
3. Waste heat recovery; or
4. A combination of these system sources capable of and configured to provide at least 70 percent of the heating energy required over an operating season.

C404.13 Service water–heating system commissioning and completion requirements. Service water–heating systems, swimming pool water–heating systems, spa water–heating systems and the controls for those systems shall be commissioned and completed in accordance with Section C408.

PIPING
Plastic, 1–1/2" minimum diameter unless otherwise noted; Type 1 PVC Schedule 40, solvent weld. All piping must be bedded and backfilled per the manufacturer's recommendations.

HOSE BIBBS
Provide bibbs with vacuum breakers adjacent to walks. (By Others)

WASTE WATER
To be disposed of through air gap. The air gap shall be a minimum of two times the filter waste pipe diameter.

FLOOR DRAIN
Provide floor drain or equal with trap. Provide drain for backwash/waste line to terminate above grate, as noted above.

MAKE–UP WATER
If not otherwise provided for in the drawings, make–up water shall be provided by hose bibb located in pool deck area by Owner. Vacuum breaker protection shall be provided. Provide water supply to equipment room protected with state approved reduced pressure backflow prevention device.

LIGHTING
Provide not less than 30 foot–candles intensity measured at the surface of indoor pools and spas; 10 foot–candles for outdoor facilities; 10 foot–candles for pool deck; 20 foot–candles for locker rooms, equipment rooms and restrooms. Provide protective shielding. Indoor pools shall have emergency lighting per UL 924. (By Others)

VENTILATION/HEATING/COOLING (As Applicable)
Provide ventilation conforming to the ASHRAE pool facility standards for indoor facilities. Provide heating and cooling per state energy code and other agencies. (By Others – See Mechanical Plans)

SHOWER FACILITY
Provide means to prevent maximum temperature from exceeding 110° F. (By Others)

EMERGENCY EQUIPMENT
During the period the facility is open for use, the following is required:
1. Telephone within one minute access.
2. Standard 16 unit first–aid kit and blanket reserved for emergency use.
3. Provision of a clearly marked emergency shut off switch for turning off all pumps. Switch shall be equipped with an audible alarm to alert others at the area of the facility. The switch shall be accessible to the public and located within 15 feet of the spa.

SIGNAGE AND TESTING EQUIPMENT
Provide signage and testing equipment in conformance with applicable regulations.

EQUIPMENT
Proper housing to protect equipment shall be provided. Provide combustion air and venting of combustion gasses per manufacturer's requirement and codes (By Others – See Mechanical Plans).

CHEMICAL STORAGE
Store chemicals in accordance with the manufacturer's requirements to minimize health and safety risks. Ensure proper hazard placards are posted on the exterior door to the chemical storage area. Provide separate room from pool equipment room when feasible.

City of Puyallup
Development & Permitting Services
ISSUED PERMIT
Building | Planning
Engineering | Public Works
Fire | Traffic

Swimming Pool to be Permitted Separately.

REVISIONS
1 06–30–25 PER COP REVIEW
2 .
3
4
5
6
7
8

811 PORTER WAY
MILTON, WA 98354
(253) 952–7797
FAX (253) 952–7799

ENGINEERING CONSULTANTS NORTHWEST

JOSEPH J. DOMINICK
STATE OF WASHINGTON
21483
REGISTERED PROFESSIONAL ENGINEER
06–20–25

CLIENT
PLEASURE POOLS AND SPAS
5414 175T AVENUE COURT EAST
SUMNER, WA 98101
(253) 840–9292

PROJECT
ROYAL VALLEY
BREMERTON, WA

POOL DETAILS AND NOTES

DATE 06–20–25
DRAWN J.M.A.
DESIGNED J.J.D.
APPROVED J.J.D.
PROJECT NO. 2252800
SHEET NO. SP5

5 Of 6 Sheets

POOLS\2025\2252800–SP3 1=4 06–30–25 JMA

RANGER AT POOL LIFT

US PATENT NO'S: [7,249,386 B2] [D507,769 S]

MEASUREMENT TAKEN WITH THE LIFT AT FULL LOAD

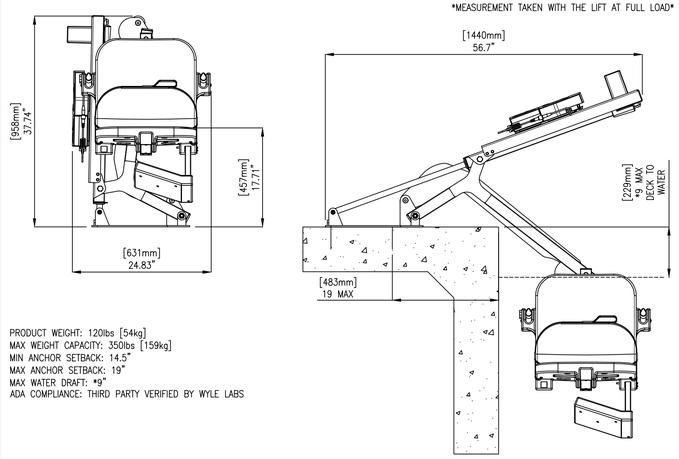

PRODUCT WEIGHT: 120lbs [54kg]
MAX WEIGHT CAPACITY: 350lbs [159kg]
MIN ANCHOR SETBACK: 14.5"
MAX ANCHOR SETBACK: 19"
MAX WATER DRAFT: *9"
ADA COMPLIANCE: THIRD PARTY VERIFIED BY WYLE LABS

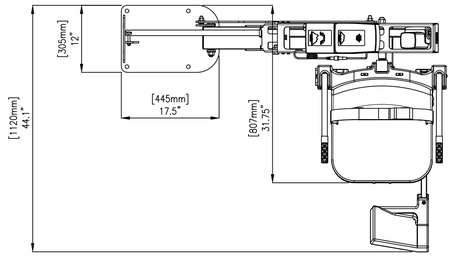

Inspected And Verified To Meet Applicable Sections of ADA Guidelines Section 1009.2 By

wyle laboratories

A Registered ISO 9001 Laboratory

Aqua Creek Products ®

9889 GARRYMORE LANE
MISSOULA, MT 59808 (406)
549-0769 FAX (406)
549-2602

NOTE:
*SPECIFICATIONS ARE SUBJECT TO CHANGE WITHOUT NOTICE

PRODUCT:	F-411RPL-AT1
DWG #:	1 OF 1
SCALE: 1:16	DATE: 12/9/2016
DRAWN BY: EF	REVISION: A

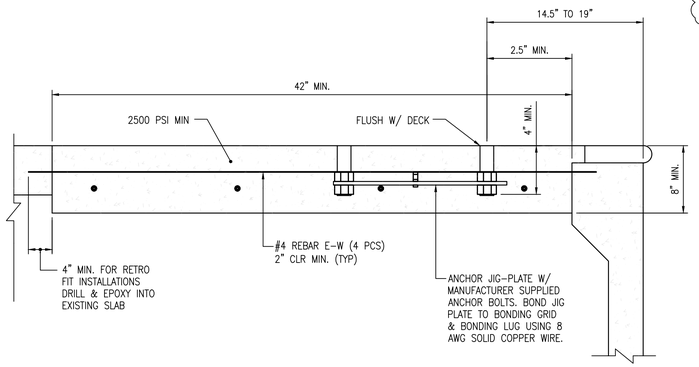

ADA LIFT SUPPORT

NTS — 2 / 6 6

SPECIAL INSPECTION REQUIREMENTS			
OPERATION	CONTINUOUS	PERIODIC	REMARKS
INSPECT REINFORCEMENT, INCLUDING PRESTRESSING TENDONS, AND VERIFY PLACEMENT		X	
INSPECT CONCRETE & SHOTCRETE PLACEMENT FOR PROPER APPLICATION TECHNIQUES	X		

NOTE:
ALL ITEMS MARKED SHALL BE INSPECTED IN ACCORDANCE WITH IBC CHAPTER 17. THE ENGINEER AND BUILDING OFFICIAL SHALL BE FURNISHED WITH COPIES OF ALL RESULTS. ANY INSPECTION FAILING TO MEET THE PROJECT SPECIFICATIONS SHALL BE IMMEDIATELY BROUGHT TO THE ATTENTION OF THE DESIGN TEAM.

GENERAL NOTES

PRCNC20250692

1

CONFORMANCE
All material and construction methods shall conform to Chapter 246-260 WAC, "Water Recreation Facilities" published by the Washington State Department of Health, 2021 International Building Code, International Electrical Code and International Building Code, International Mechanical Code, 2017 ICC A117.1, 2010 ASCE 7-10, 2021 Washington State Energy Code, latest editions, as modified by the local agency having jurisdiction. Comply with IBC Sections 1910.4.3, 1910.5, 1910.9 and 1910.10.

CONCRETE
Shotcrete: 1 part cement, 4-1/2 parts sand, based on dry and loose volume; 4,000 psi @ 28 days. Portland Cement Type I or II, ASTM C-150, seven sack mix.

REINFORCEMENT
Reinforcing steel, deformed intermediate grade, fy = 40,000 psi, ASTM A-15. Lap splices 40 diameters; support on concrete blocks and tie with 16 gage annealed wire; 2" minimum cover between earth and steel. Non-contact splices - minimum 2 inch clear between bars. Contact splices must be constructed with the bars aligned so that a line through the center of the two spliced bars is perpendicular to the surface of the surface of the surface of the shotcrete work.

CONSTRUCTION
Maximum length of pool without control joint is 60'-0". Shotcrete is to be placed monolithic and pneumatically.

BARRIERS
Barrier protection shall be provided to prevent unauthorized access to pool facilities including:
1. Owners shall provide barriers to prevent unauthorized persons from gaining access to pools. Spray pool facilities without standing water are exempt from barrier requirements of this section.
2. Barriers at limited use pools must be at least sixty inches high.
3. Barriers at general use pools must be at least seventy-two inches high.
4. Barriers, including windows, may not:
   a. Have spaces between vertical members greater than a width of one and three-quarter inches if the distance between the tops of horizontal members are spaced less than forty-five inches apart.
5. Solid barriers may not have indentations or protrusions, other than normal construction tolerances and masonry joints.
6. Barriers must have self-closing, self-latching gates or doors that provide either:
   a. A mechanism that uses a continuously locked latch, coded lock or
   b. other equivalent access control system that always requires a key or code to enter pool area. If the latch is less than sixty inches from the ground, the barrier must have an eighteen-inch radius of solid material around the latch to preclude a child on the outside of the barrier from reaching through the gate or barrier and opening the latch and entering the pool; or a latch height of sixty inches or more from the ground.
7. Restricted area service entrances are exempt from door or gate requirements provided that no public access is available.
8. Lifeguarded pools are not required to have a self-closing, self-latching gate during the period a pool is in use. Facility gates shall be closed and locked during nonuse periods. Barrier heights are measured on the side outside the pool enclosure area.
9. Owners shall ensure that surrounding ground levels, structures, or landscaping do not reduce the effective height of the barrier.

BONDING
All metallic components of the pool shall be bonded and grounded in conformance to the National Fire Protection Association Electrical Code section 680.26(B).

DISABILITY ACCESS
Provide "person with disability" access per applicable regulations.

BACKFLOW PREVENTION
Provide non-atmospheric backflow prevention devices on plumbing fixtures connected to the potable water system which serve the pool related facilities.

INSULATION
Provide insulation on exposed recirculation system within the contained space per WSEC Section 403.2.9 for pools and spas heated to greater 95° F. Pool design temperature = 83°F.

ENERGY CODE
Provide pool/spa equipment, covers, piping insulation, motors, etc. in accordance with the applicable portions of WSEC Sections C404.11.1 through C404.11.4

C404.10.1 Heaters. Heat pump pool heaters shall have a minimum COP of 4.0 determined in accordance with ASHRAE Standard 146. Other pool heating equipment shall comply with the applicable efficiencies in Section C404.2. The electric power to all heaters shall be controlled by a readily accessible on-off switch that is an intergral part of the heater, or external to and within 3 feet of the heater. Operation of such switch shall not change the setting of the heater thermostat. Such switches shall be in addition to a circuit breaker for the power to the heater. Gas fired heaters shall not be equipped with constant burning pilot lights.

C404.10.2 Time Switches. Time switches or other control method that can automatically turn off and on heaters and pump motors according to a preset schedule shall be installed for heaters and pump motors. Heaters and pump motors that have built in time switches shall be in compliance with this section.
Exceptions:
1. Where public health standards require 24-hour pump operation.
2. Pumps that are required to operate solar-and-waste-heat-recovery pool heating systems.

C404.10.3 Covers. Heated pools and in-ground permanent spas shall Pools heated to more than 90°F shall have a pool cover with a minimum insulation value of R-12, and the sides and bottom of the pool shall also have a minimum insulation value of R-12.

C404.10.4 Heat Recovery. Heated indoor swimming pools, spas or hot tubs with water surface area greater than 200 square feet shall provide for energy conservation by an exhaust air heat recovery system that heats ventilation air, pool water or domestic hot water. The heat recovery system shall be configured to decrease the exhaust air temperature at design heating conditions (80°F indoor) by 36°F (10°C).
Exception: Pools, spas or hot tubs that include system(s) that provide equivalent recovered energy on an annual basis through one of the following methods:
1. Renewable energy;
2. Dehumidification heat recovery;
3. Waste heat recovery; or
4. A combination of these system sources capable of and configured to provide at least 70 percent of the heating energy required over an operating season.

C404.13 Service water-heating system commissioning and completion requirements. Service water-heating systems, swimming pool water-heating systems, spa water-heating systems and the controls for those systems shall be commissioned and completed in accordance with Section C408.

WASTE WATER
To be disposed of through air gap. The air gap shall be a minimum of two times the filter waste pipe diameter.

FLOOR DRAIN
Provide floor drain or equal with trap. Provide drain for backwash/waste line to terminate above grate, as noted above.

MAKE-UP WATER
If not otherwise provided for in the drawings, make-up water shall be provided by hose bibb located in pool deck area by Owner. Vacuum breaker protection shall be provided. Provide water supply to equipment room protected with state approved reduced pressure backflow prevention device.

EQUIPMENT
Proper housing to protect equipment shall be provided. Provide combustion air and venting of combustion gasses per manufacturer's requirement and codes (By Others - See Mechanical Plans).

CHEMICAL STORAGE
Store chemicals in accordance with the manufacturer's requirements to minimize health and safety risks. Ensure proper hazard placards are posted on the exterior door to the chemical storage area. Provide separate room from pool equipment room when feasible.

ADA LIFT DETAIL

NTS — 1 / 6 6

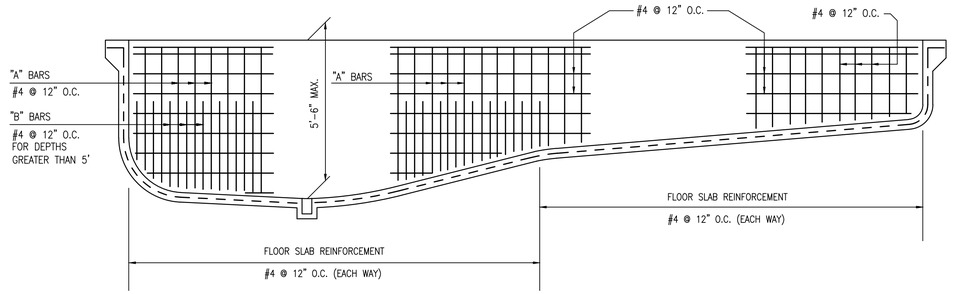

STRUCTURAL SECTION

NTS — 3 / 6 6

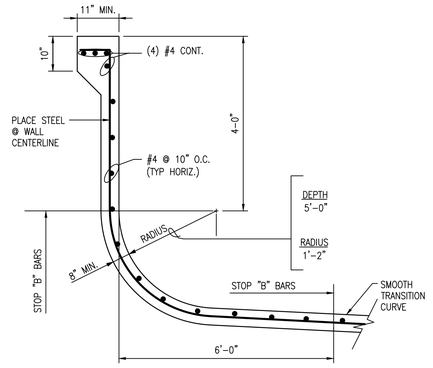

POOL WALL SECTION

NTS — A / 6 6

SYSTEM COMMISSIONING			
DESCRIPTION	EQUIPMENT/FEATURE	TEST	BY
POOL RECIRCULATION PUMP	POOL RECIRCULATION PUMP	CONTINUOUS OPERATION DESIGN FLOW RANGE	POOL CONTRACTOR
WADER RECIRCULATION PUMP	WADER RECIRCULATION PUMP	CONTINUOUS OPERATION DESIGN FLOW RANGE	POOL CONTRACTOR
POOL HEATER	POOL HEATER	PILOT & SWITCH OPERATOR ACCESSIBLE SET POINT TEMP = 83°F CONTROLS INACCESSIBLE TO BATHERS	POOL CONTRACTOR
WADER HEATER	WADER HEATER	PILOT & SWITCH OPERATOR ACCESSIBLE SET POINT TEMP = 80°F CONTROLS INACCESSIBLE TO BATHERS	POOL CONTRACTOR
NOTE: REFERENCE WSEC SECTION 408 FOR COMMISSIONING.			

City of Puyallup
Development & Permitting Services
ISSUED PERMIT
Building | Planning
Engineering | Public Works
Fire | Traffic

Swimming Pool to be Permitted Separately.

REVISIONS
1 06-30-25 PER COP REVIEW
2 .
3
4

811 PORTER WAY
MILTON, WA 98354
(253) 952-7797
FAX (253) 952-7799
ENGINEERING CONSULTANTS NORTHWEST

JOSEPH J. DOMINICK — STATE OF WASHINGTON — 21449 — REGISTERED PROFESSIONAL ENGINEER
06-20-25

CLIENT
PLEASURE POOLS AND SPAS
5414 71ST AVENUE COURT EAST
PUYALLUP, WA 98101
(253) 840-9292

PROJECT
ROYAL VALLEY
BREMERTON, WA
POOL STRUCTURAL DETAILS AND NOTES

DATE	06-20-25
DRAWN	J.M.A.
DESIGNED	J.J.D.
APPROVED	J.J.D.
PROJECT NO.	2252800
SHEET NO.	SP6

6 Of 6 Sheets

P:\2025\2025\2252800-SP3 1=4 06-25-25 JMA