PATRIOT FIRE PROTECTION, INC.
Fire Sprinklers Save Lives!
2707 70TH Avenue East
Tacoma, WA 98424
TEL: (253) 926.2290
FAX: (253) 922.6150

Fire Protection Equipment Submittal

for

Centeris Voltage Park – L1 Obstructions
1023 39th Ave SE
Puyallup, WA 98374

PFP Job #18-0181

HANFORD, WA OFFICE
TEL (509) 373.8895
FAX (509) 373.8919

VANCOUVER, WA OFFICE
TEL (360) 699.4403
PORTLAND (503) 222.6001
FAX (360) 699.4485

SPOKANE, WA OFFICE
TEL (509) 926.3428
FAX (509) 926.3708

2707 70TH Avenue East
Tacoma, WA 98424

TEL: (253) 926.2290
FAX: (253) 922.6150

SECTION 1.0

SPRINKLERS

F1-80 Series
Standard-Response Sprinklers

K-factor 8.0 (115)

Features

- Standard coverage standard-response sprinklers
- Upright and pendent orientations
- Low profile, compact design
- Available in a wide variety of finishes
- Available as Intermediate Level sprinklers

Product Description

Reliable Model F1 series sprinklers are standard-response standard spray automatic fire sprinklers utilizing a 5mm glass bulb thermal element.

Pendent sprinklers may be installed exposed or surface mounted using escutcheons such as the Reliable Models B, C, or HB (reference Technical Bulletin 204). When installed recessed, the Model F1-80 series sprinklers are specifically listed with and may only be installed with listed Reliable recessed escutcheons. Refer to the technical information on the following pages for specific listings for recessed installations and refer to Figure 3 for dimensional information.

When fitted with an approved Reliable water shield, these sprinklers may considered intermediate sprinklers for use in racks, below grated walkways, and other areas where intermediate level sprinklers are required.

Table A provides a summary of the approvals and availability of specific Model F1 series sprinkler configurations. Additional technical information for each sprinkler model is provided on the following pages.

Important! Reliable fire sprinklers must be handled, stored, and installed in accordance with the guidelines in Caution Sheet 310 and this bulletin. Failure to follow these instructions may result in unintended operation or nonoperation of the fire protection system.

Model F1-80 Upright

Model F1-80 Pendent

Note: Not all versions of the product are shown.

F1-80 Series Sprinkler Summary — **Table A**

Sprinkler Model	K-Factor gpm/psi$^{1/2}$ (lpm/bar$^{1/2}$)	Max. Working Pressure psi (bar)	Listings & Approvals	Orientation	Sprinkler Identification Number (SIN)
F1-80	8.0 (115)	175 (12) 250 (17) (cULus only)	cULus, FM, LPCB, VdS, CE, UKCA	Upright	RA6222
				Pendent	RA6212

Model F1-80 Upright Sprinkler

SIN RA6222

Technical Specifications
Style: Upright
Threads: 3/4" NPT or ISO 7-R3/4
Nominal K-Factor: 8.0 (115)
Max. Working Pressure:
175 psi (12 bar)
250 psi (17 bar) (cULus only)

Material Specifications
Thermal Sensor: 5mm Glass Bulb
Sprinkler Frame: Brass Alloy
Cap: Bronze Alloy
Sealing Washer: Nickel with PTFE
Load Screw: Copper Alloy
Deflector: Brass Alloy

Sprinkler Finishes
(See Table B)

Sensitivity
Standard response

Temperature Ratings
135°F (57°C)
155°F (68°C)
175°F (79°C)
200°F (93°C)
286°F (141°C)
360°F (182°C)

Guards & Shields
F-1 Guard (cULus)
F-2 Guard (FM)
F-3 Guard with Shield (cULus, FM)

Sprinkler Wrenches
Model W2
Model W14 (with guard installed)

Listings and Approvals
cULus
FM
LPCB
VdS
CE
UKCA: 0832-UKCA-CPR-S5076

Model F1-80 Upright Sprinkler Components and Dimensions

Figure 1

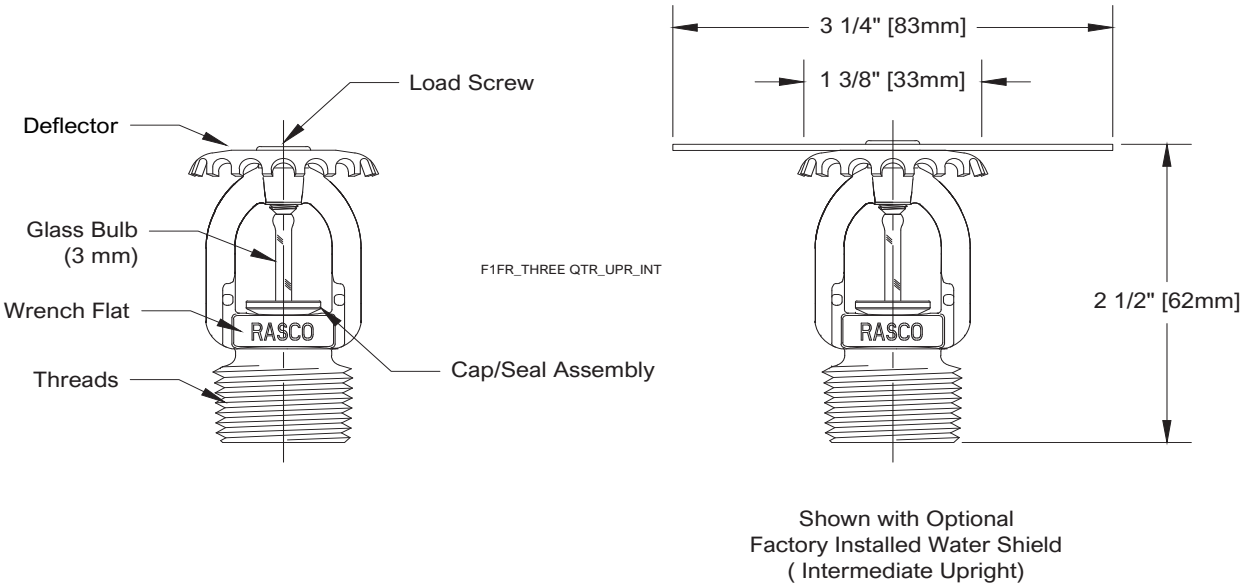

Shown with Optional
Factory Installed Water Shield
(Intermediate Upright)

Model F1-80 Pendent Sprinkler — SIN RA6212

Technical Specifications
Style:
Pendent
Recessed Pendent
Threads: 3/4" NPT or ISO 7-R3/4
Nominal K-Factor: 8.0 (115)
Max. Working Pressure:
175 psi (12 bar)
250 psi (17 bar) (cULus only)

Material Specifications
Thermal Sensor: 5mm Glass Bulb
Sprinkler Frame: Brass Alloy
Cap: Bronze Alloy
Sealing Washer: Nickel with PTFE
Load Screw: Copper Alloy
Deflector: Brass Alloy

Sprinkler Finishes
(See Table B)

Sensitivity
Standard response

Temperature Ratings[1]
135°F (57°C)
155°F (68°C)
175°F (79°C)
200°F (93°C)
286°F (141°C)
360°F (182°C)

Recessed Escutcheons
Model F1 (cULus)
Model F2 (cULus, FM)
Model FP (cULus)

Guards & Shields[2]
F-2 Guard (FM)
F-6 Guard/Shield Kit (FM)
F-7 Guard (cULus)
F-8 Guard/Shield Kit (cULus)
S-2 Shield (cUlus, FM)

Sprinkler Wrenches
Model W2 (pendent)
Model W1 (recessed)
Model W14 (with guard installed)

Listings and Approvals[3]
cULus Listed
FM Approved
LPCB
VdS
CE
UKCA: 0832-UKCA-CPR-S5077

Notes:
1. 286°F (141°C) and higher temperature rated sprinklers not listed for recessed use.
2. Not suitable for use with recessed pendent installations.
3. When used surface mounted or exposed. See Recessed Escutcheon section for specific approvals when installed recessed.

Model F1-80 Pendent Sprinkler Components and Dimensions — Figure 2

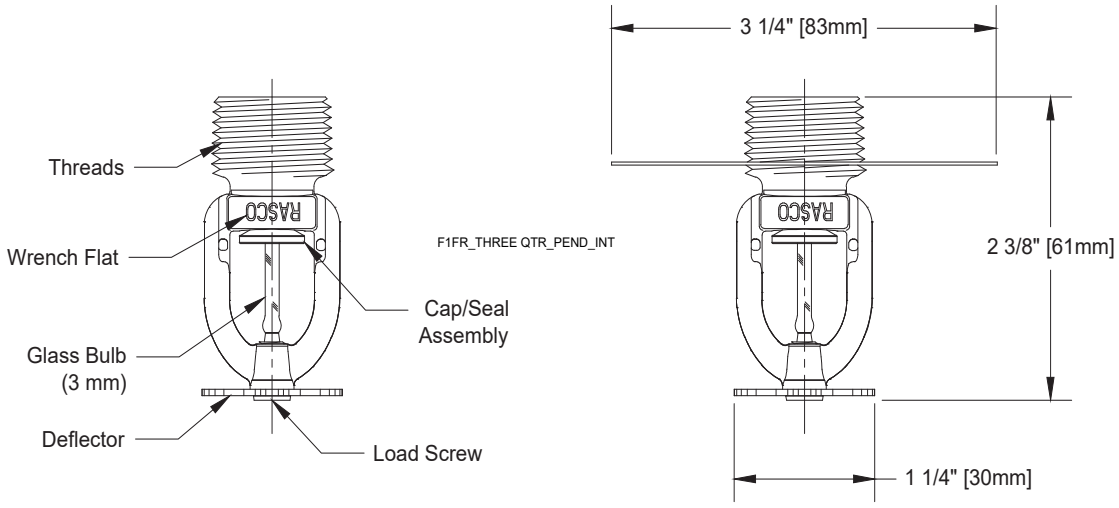

Shown with Optional S-1 Water Shield (Ordered Separately)

Note: Please refer to Figure 3 for recessed installation.

Recessed Installation: Pendent Sprinklers

Figure 3

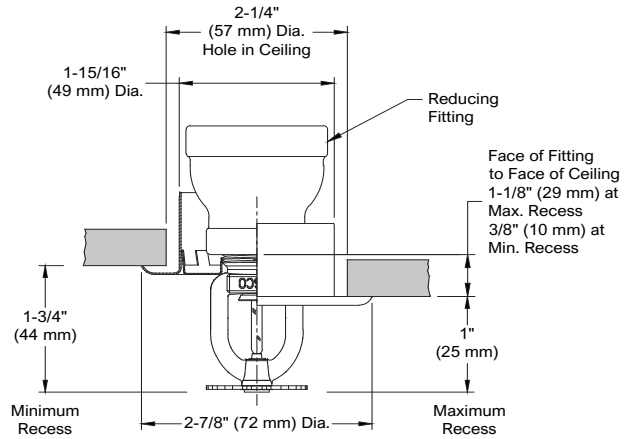

Models F1 & F1FR Pendent Sprinkler
with Model F1 Recessed Escutcheon
3/4" (19mm) Nominal Adjustment

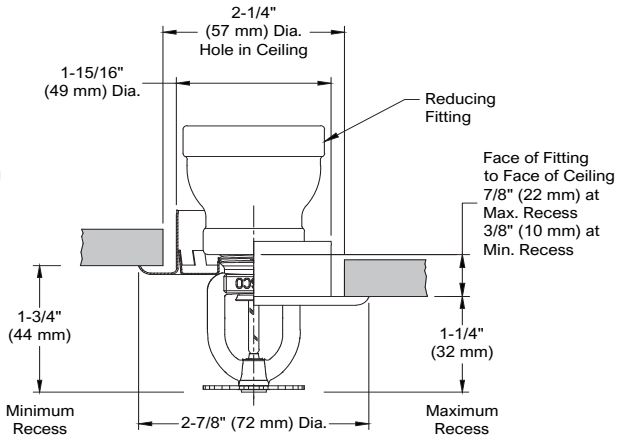

Models F1 & F1FR Pendent Sprinkler
with Model F2 Recessed Escutcheon
1/2" (13mm) Nominal Adjustment

F1_REC_PEND

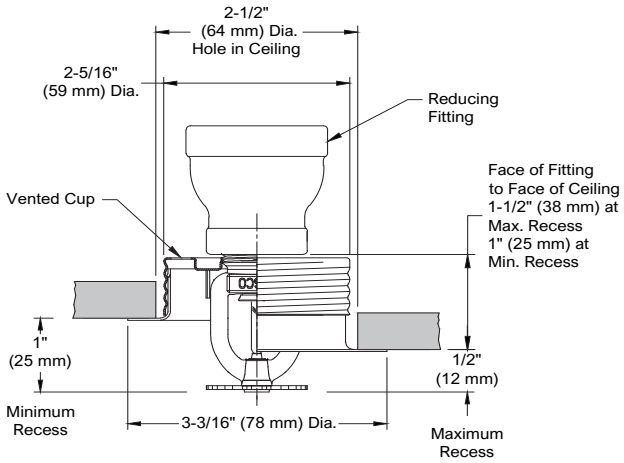

Models F1 & F1FR Pendent Sprinkler
with Model FP Recessed Escutcheon
1/2" (13mm) Nominal Adjustment

Note: Model FP recessed assemblies may not be used where the pressure in the space above the ceiling is positive with respect to the protected area. Ensure that the openings in the Model FP cup are unobstructed following installation.

FP Escutcheon

F1 Escutcheon
(F2 Similar)

Wrenches

Model W2 (upright, pendent)

Model W14 (with guard installed)

Model W1
(recessed pendent)

Sprinkler and Escutcheon Finishes[1] — **Table B**

Standard Finishes		Special Application Finishes	
Sprinkler	**F1, F2 and FP[2] Escutcheons**	**Sprinkler**	**F1, F2 and FP[2] Escutcheons**
Bronze	Brass	Electroless Nickel PTFE[3][4]	Bright Brass
Chrome Plated	Chrome Plated	Bright Brass[5]	Satin Chrome
White Polyester[3]	White Polyester	Satin Chrome	Custom Color Polyester
		Custom Color Polyester[3][6]	
		Lead Plated[3]	
		Wax Coated[3][7]	
		Wax Over Lead[3][7]	

Notes:
1. Paint or any other coating applied over the factory finish will void all approvals and warranties.
2. Model FP escutcheons utilize a galvanized steel cup with a finished trim ring.
3. cULus Listed as corrosion resistant.
4. FM Approved as corrosion resistant.
5. For 200°F (93°C) maximum temperature rated sprinklers only.
6. cULus only.
7. Clear wax used on ordinary temperature rated sprinklers; brown wax used on intermediate temperature rated sprinklers. Brown wax may be used on high temperature rated sprinklers where the ambient temperature does not exceed 150°F (66°C).

Installation

Model F1 Series sprinklers must be installed in accordance with NFPA13 and the requirements of all applicable authorities having jurisdiction. Model F1 Series sprinklers must be installed with the Reliable sprinkler installation wrench identified in this Bulletin. Any other wrench may damage the sprinkler. A leak tight sprinkler joint can be obtained with a torque of 8 to 18 lb-ft (11 to 24 N·m). Do not tighten sprinklers over the maximum recommended installation torque. Exceeding the maximum recommended installation torque may cause leakage or impairment of the sprinkler.

Glass bulb sprinklers have orange bulb protectors or protective caps to minimize bulb damage during shipping, handling and installation. Reliable sprinkler installation wrenches are designed to install sprinklers with bulb protectors in place. Remove the bulb protector at the time when the sprinkler system is placed in service for fire protection. Removal of the bulb protector before this time may leave the bulb vulnerable to damage. Remove bulb protectors by undoing the clasp by hand. Do not use tools to remove bulb protectors.

Maintenance

Reliable Model F1 series sprinklers should be inspected and the sprinkler system maintained in accordance with NFPA 25, as well as the requirements of any Authorities Having Jurisdiction.

Prior to installation, sprinklers should remain in the original cartons and packaging until used. This will minimize the potential for damage to sprinklers that could cause improper operation or non-operation.

Do not clean sprinklers with soap and water, ammonia liquid or any other cleaning fluids. Remove dust by gentle vacuuming without touching the sprinkler.

Replace any sprinkler which has been painted (other than factory applied). A stock of spare sprinklers should be maintained to allow quick replacement of damaged or operated sprinklers. Failure to properly maintain sprinklers may result in inadvertent operation or non-operation during a fire event.

Guarantee

For the guarantee, terms, and conditions, visit www.reliablesprinkler.com.

Ordering Information

Specify the following when ordering:

Model
- F1-80

Deflector/Orientation
- Upright
- Upright Intermediate
- Pendent

Temperature Rating
- See sprinkler technical specifications

Sprinkler Finish
- See Table B

Recessed Escutcheon
- F1
- F2
- FP

Escutcheon Finish
- See Table B

Sprinkler Wrench
- Model W2 (upright and pendent)
- Model W1 (recessed)
- Model W14 (with guard installed)

P/N 9999970502

F1FR80 Series
Quick-Response Sprinklers

K-factor 8.0 (115)

Features

- Standard coverage quick-response sprinklers
- Upright and pendent orientations
- Low profile, compact design
- Available in a wide variety of finishes
- Available as Intermediate Level sprinklers

Product Description

Reliable Model F1FR80 series sprinklers are quick-response standard spray automatic fire sprinklers utilizing a sensitive 3mm glass bulb thermal element.

Pendent sprinklers may be installed exposed, or surface mounted using escutcheons such as the Reliable Models B, C, or HB (reference Technical Bulletin 204). When installed recessed, the Model F1FR80 series sprinklers are specifically listed with and may only be installed with listed Reliable recessed escutcheons. Refer to the technical information on the following pages for specific listings for recessed installations and refer to Figure 3 for dimensional information.

When fitted with an approved Reliable water shield, these sprinklers may considered intermediate sprinklers for use in racks, below grated walkways, and other areas where intermediate level sprinklers are required.

Table A provides a summary of the approvals and availability of specific Model F1FR series sprinkler configurations. Additional technical information for each sprinkler model is provided on the following pages.

Important! Reliable fire sprinklers must be handled, stored, and installed in accordance with the guidelines in Caution Sheet 310 and this bulletin. Failure to follow these instructions may result in unintended operation or nonoperation of the fire protection system.

Model F1FR80
Upright Sprinkler

Model F1FR80 Pendent Sprinkler

Note: Not all versions of the product are shown.

F1FR80 Series Sprinkler Summary — **Table A**

Sprinkler Model	K-Factor gpm/psi$^{1/2}$ (lpm/bar$^{1/2}$)	Max. Working Pressure psi (bar)	Listings & Approvals	Orientation	Sprinkler Identification Number (SIN)
F1FR80	8.0 (115)	175 (12) 250 (17) (cULus only)	cULus, FM, LPCB, VdS, CE, UKCA	Upright	RA6322
				Pendent	RA6312

Model F1FR80 Upright Sprinkler — SIN RA6322

Technical Specifications
- **Style:** Upright
- **Threads:** 3/4" NPT or ISO 7-R3/4
- **Nominal K-Factor:** 8.0 (115)
- **Max. Working Pressure:**
  - 175 psi (12 bar)
  - 250 psi (17 bar) (cULus only)

Material Specifications
- **Thermal Sensor:** 3 mm Glass Bulb
- **Sprinkler Frame:** Brass Alloy
- **Cap:** Bronze Alloy
- **Sealing Washer:** Nickel with PTFE
- **Load Screw:** Copper Alloy
- **Deflector:** Brass Alloy

Sprinkler Finishes
(See Table B)

Sensitivity
Quick response

Temperature Ratings
- 135°F (57°C)
- 155°F (68°C)
- 175°F (79°C)
- 200°F (93°C)
- 286°F (141°C)

Guards & Shields
- F-1 Guard (cULus, FM)
- F-2 Guard (FM)
- F-3 Guard with Shield (cULus, FM)
- Factory Installed Shield (cULus, FM)

Sprinkler Wrenches
- Model W2
- Model W14 (with guard installed)

Listings and Approvals
- cULus
- FM
- LPCB
- VdS
- CE
- UKCA: 0832-UKCA-CPR-S5078

Model F1FR80 Upright Sprinkler Components and Dimensions — Figure 1

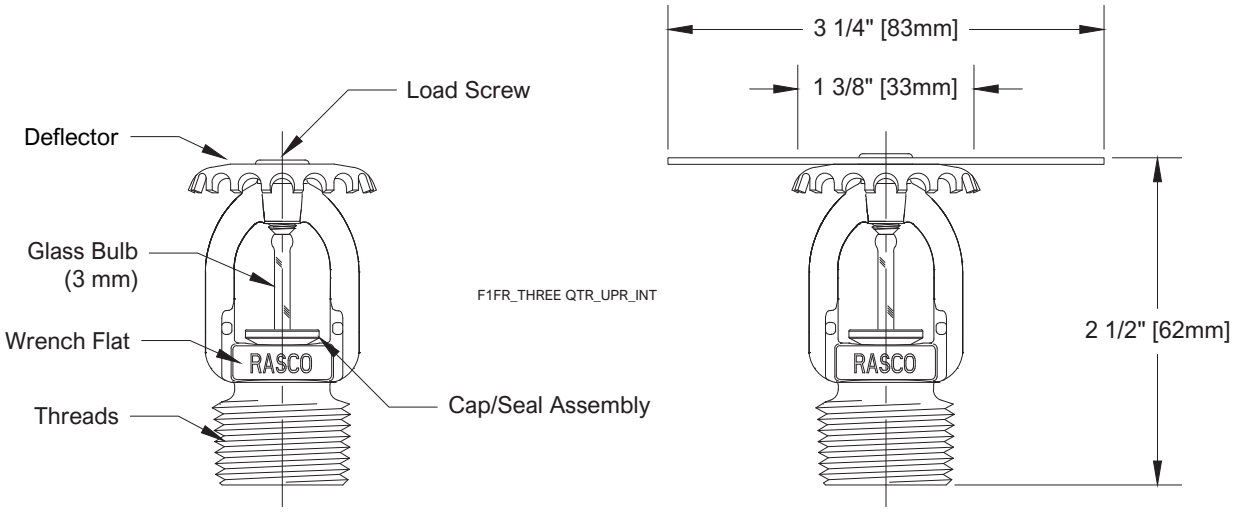

Shown with Optional
Factory Installed Water Shield
(Intermediate Upright)

Model F1FR80 Pendent Sprinkler — SIN RA6312

Technical Specifications
Style:
Pendent
Recessed Pendent
Threads: 3/4" NPT or ISO 7-R3/4
Nominal K-Factor: 8.0 (115)
Max. Working Pressure:
175 psi (12 bar)
250 psi (17 bar) (cULus only)

Material Specifications
Thermal Sensor: 3 mm Glass Bulb
Sprinkler Frame: Brass Alloy
Cap: Bronze Alloy
Sealing Washer: Nickel with PTFE
Load Screw: Copper Alloy
Deflector: Brass Alloy

Sprinkler Finishes
(See Table B)

Sensitivity
Quick response

Temperature Ratings[1]
135°F (57°C)
155°F (68°C)
175°F (79°C)
200°F (93°C)
286°F (141°C)

Recessed Escutcheons
Model F1 (cULus)
Model F2 (cULus, FM)
Model FP (cULus)

Guards & Shields[2]
F-2 Guard (FM)
F-6 Guard/Shield Kit (FM)
F-7 Guard (cULus)
F-8 Guard/Shield Kit (cULus)
S-2 Shield (cUlus, FM)

Sprinkler Wrenches
Model W2 (pendent)
Model W4 (recessed)
Model W14 (with guard installed)

Listings and Approvals[3]
cULus Listed
FM Approved
LPCB
VdS
CE
UKCA: 0832-UKCA-CPR-S5079

Notes:
1. 286°F (141°C) temperature rated sprinkler not listed for recessed use.
2. Not suitable for recessed pendent installations.
3. When used surface mounted or exposed. See Recessed Escutcheon section for specific approvals when installed recessed.

Model F1FR80 Pendent Sprinkler Components and Dimensions — Figure 2

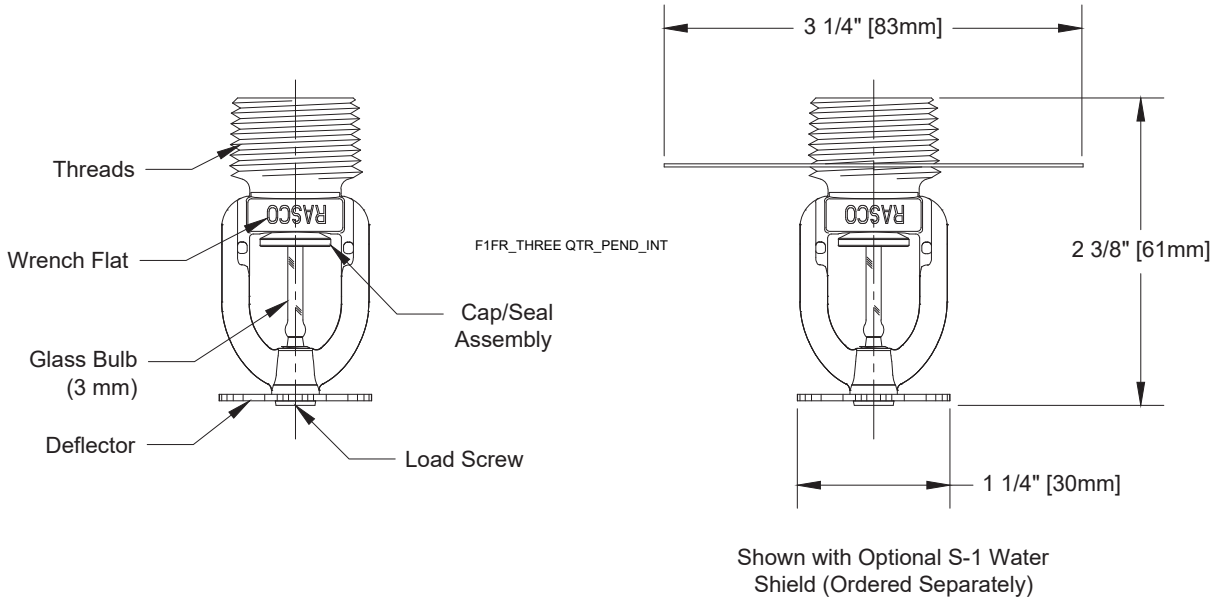

Note: Please refer to Figure 3 for recessed installation.

Recessed Installation: Pendent Sprinklers

Figure 3

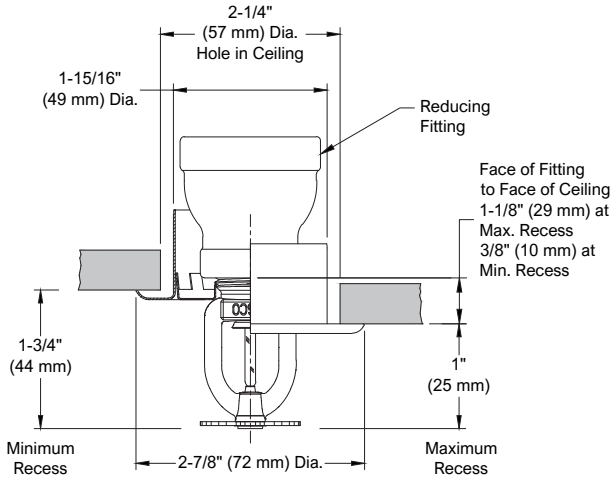

Models F1 & F1FR Pendent Sprinkler
with Model F1 Recessed Escutcheon
3/4" (19mm) Nominal Adjustment

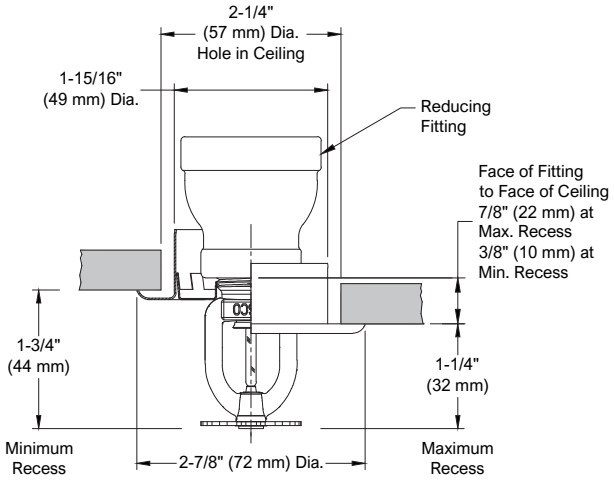

Models F1 & F1FR Pendent Sprinkler
with Model F2 Recessed Escutcheon
1/2" (13mm) Nominal Adjustment

F1_REC_PEND

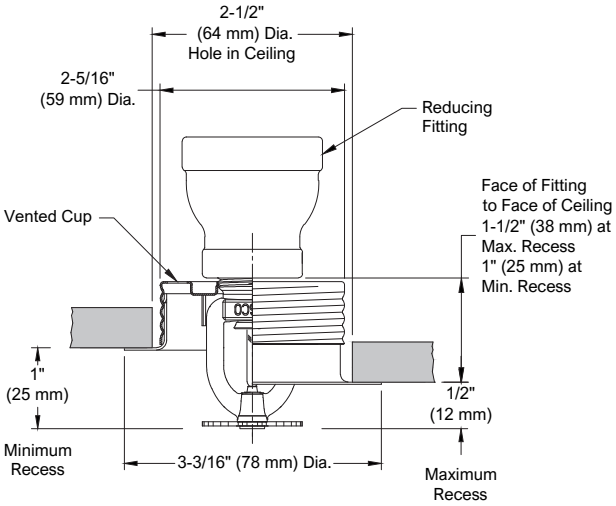

Models F1 & F1FR Pendent Sprinkler
with Model FP Recessed Escutcheon
1/2" (13mm) Nominal Adjustment

Note: Model FP recessed assemblies may not be used where the pressure in the space above the ceiling is positive with respect to the protected area. Ensure that the openings in the Model FP cup are unobstructed following installation.

F1 Escutcheon
(F2 Similar)

FP Escutcheon

Wrenches

Model W2 (upright, pendent)

Model W14 (with guard installed)

Model W4
(recessed pendent)

Finishes[1] **Table B**

Standard Finishes		Special Application Finishes	
Sprinkler	**F1, F2 and FP[2] Escutcheons**	**Sprinkler**	**F1, F2 and FP[2] Escutcheons**
Bronze	Brass	Electroless Nickel PTFE[3][4]	Bright Brass
Chrome Plated	Chrome Plated	Bright Brass[5]	Satin Chrome
White Polyester[3]	White Polyester	Satin Chrome	Custom Color Polyester
		Custom Color Polyester[3][6]	

Notes:
1. Paint or any other coating applied over the factory finish will void all approvals and warranties.
2. Model FP escutcheons utilizes a galvanized steel cup with a finished trim ring.
3. cULus Listed as corrosion resistant.
4. FM Approved as corrosion resistant.
5. For 200°F (93°C) maximum temperature rated sprinklers only.
6. cULus Only.

Installation

Model F1FR Series sprinklers must be installed in accordance with NFPA13 and the requirements of all applicable authorities having jurisdiction. Model F1FR Series sprinklers must be installed with the Reliable sprinkler installation wrench identified in this Bulletin. Any other wrench may damage the sprinkler. The Models W2 and W4 wrenches have two sets of jaws. Use the smallest set of jaws that fit on the wrench flats of the sprinkler. A leak tight sprinkler joint can be obtained with a torque of 8 to 18 lb-ft (11 to 24 N·m). Do not tighten sprinklers over the maximum recommended installation torque. Exceeding the maximum recommended installation torque may cause leakage or impairment of the sprinkler.

Glass bulb sprinklers have orange bulb protectors or protective caps to minimize bulb damage during shipping, handling and installation. Reliable sprinkler installation wrenches are designed to install sprinklers with bulb protectors in place. Remove the bulb protector at the time when the sprinkler system is placed in service for fire protection. Removal of the bulb protector before this time may leave the bulb vulnerable to damage. Remove bulb protectors by undoing the clasp by hand. Do not use tools to remove bulb protectors.

Maintenance

Reliable Model F1FR series sprinklers should be inspected and the sprinkler system maintained in accordance with NFPA 25, as well as the requirements of any Authorities Having Jurisdiction.

Prior to installation, sprinklers should remain in the original cartons and packaging until used. This will minimize the potential for damage to sprinklers that could cause improper operation or non-operation.

Do not clean sprinklers with soap and water, ammonia liquid or any other cleaning fluids. Remove dust by gentle vacuuming without touching the sprinkler.

Replace any sprinkler which has been painted (other than factory applied). A stock of spare sprinklers should be maintained to allow quick replacement of damaged or operated sprinklers. Failure to properly maintain sprinklers may result in inadvertent operation or non-operation during a fire event.

Guarantee

For the guarantee, terms, and conditions, visit www.reliablesprinkler.com.

Ordering Information

Specify the following when ordering:

Model
- F1FR80

Deflector/Orientation
- Upright
- Upright Intermediate
- Pendent

Temperature Rating
- See sprinkler technical specifications

Sprinkler Finish
- See Table B

Recessed Escutcheon
- F1
- F2
- FP

Escutcheon Finish
- See Table B

Sprinkler Wrench
- Model W2 (upright and pendent)
- Model W4 (recessed)
- Model W14 (with guard installed)

P/N 9999970503

Model KFR56 Series Sprinklers

Quick-response, Standard Spray Fusible Link Sprinklers

K5.6 (80 metric)
cULus Listed, FM Approved, VdS Approved, CE Certified

Product Description

Model KFR56 series sprinklers are standard spray, quick-response sprinklers with a fusible link operating element. The sprinklers are cULus Listed, FM Approved, VdS Approved, and CE Certified. See Table C for available finishes. All KFR56 sprinklers have a nominal K-factor of 5.6 (80 metric).

Model KFR56 series sprinklers are available in Ordinary (165°F [74°C]) or Intermediate (212°F [100°C]) temperature classification. Model KFR56 Pendent sprinklers are available with Model F1, Model F2, or Model FP recessed escutcheons.

Application

Model KFR56 series sprinklers are listed and approved for installation in accordance with NFPA 13 and FM Loss Prevention Data Sheets. Follow requirements of NFPA 13 for Quick-response Standard Spray Sprinklers when installing Model KFR56 series sprinklers. FM Approvals classifies Model KFR56 sprinklers as K5.6 QR Non-storage and K5.6 QR In-rack Storage sprinklers.

Installation

Model KFR56 series sprinklers must be installed in accordance with the requirements of NFPA 13 or FM Property Loss Prevention Data Sheets. The Model F1, F2, and FP escutcheons are the only recessed escutcheons listed and approved for use with Model KFR56 Pendent sprinklers. The use of any other recessed escutcheon will void all approvals and warranties. Do not install Model FP escutcheons in ceilings that are positively pressurized with respect to the occupied space below.

Use only the Model W2 sprinkler wrench for installing Model KFR56 series pendent, upright, and horizontal sidewall sprinklers, and use the Model W1 or W4 wrench for installing Model KFR56 series recessed pendent, conical concealed pendent (CCP), and recessed horizontal sidewall sprinklers. The use of wrenches other than those specified may damage these sprinklers.

Recommended installation torque is 14-20 ft-lbs (19 – 27 N·m). Do not tighten sprinklers over the maximum recommended torque. Exceeding the maximum recommended torque may cause leakage or impairment of the sprinklers.

Important! Reliable fire sprinklers must be handled, stored, and installed in accordance with the guidelines in Caution Sheet 310 and this bulletin. Failure to follow these instructions may result in unintended operation or nonoperation of the fire protection system.

Model KFR56 Pendent

Model KFR56 Upright

Model CCP

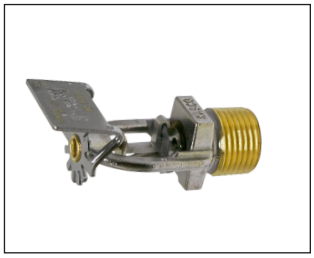

Model KFR56 HSW

Listings & Approvals

Listed by Underwriters Laboratories, Inc. and UL Certified for Canada (cULus)

- Sprinklers, Automatic and Open (VNIV)

FM Approved (FM)

- K5.6 QR Non-storage
- K5.6 QR In-rack Storage

VdS Approved and CE Certified to EN12259
UKCA: 0832-UKCA-CPR-S5073, -5074, -5075

Model KFR Series Sprinkler Summary — **Table A**

Sprinkler Model	Orientation	Listing or Approval	Max. Working Pressure psi (bar)	Sprinkler Identification Number (SIN)
KFR56 Pendent	Pendent	cULus	250 (17.2)	RA3614
		FM, VdS, CE, UKCA	175 (12)	
KFR56 Upright KFR56 Upright Intermediate	Upright	cULus	250 (17.2)	RA3624
		FM, VdS, CE, UKCA	175 (12)	
KFR56 HSW	HSW	cULus	250 (17.2)	RA3634
		FM, VdS, CE, UKCA	175 (12)	

Model KFR56 Pendent sprinkler — SIN RA3614

Technical Specifications
Style: Pendent, Recessed Pendent, or Conical Concealed Pendent
Threads: 1/2" NPT or ISO7-1R1/2
Nominal K-Factor: 5.6 (80 metric)
Max. Working Pressure:
cULus: 250 psi (17.2 bar)
FM, VdS, CE: 175 psi (12 bar)

Material Specifications
Thermal Sensor: Beryllium Nickel
Strut and Lever: Stainless Steel
Roto-clip: Stainless Steel
Sprinkler Frame: Brass Alloy
Cap: Bronze Alloy
Sealing Washer: Nickel with PTFE
Load Screw: Copper Alloy
Deflector: Brass Alloy

Sprinkler Wrenches
Model W2 (non-recessed)
Model W1 or W4 (recessed & concealed)
Model W14 (with guard installed)

Listings and Approvals
cULus Listed
FM Approved
VdS Approved
CE Certificate of constancy of performance 0786-CPR40313
UKCA: 0832-UKCA-CPR-S5074

Sprinkler Finishes
(See Table C)

Sensitivity
Quick-response

Temperature Ratings
165°F (74°C), Gray Link
212°F (100°C), White Link

Recessed Escutcheons/Cover Plates
Model F1 escutcheon (cULus only)
Model F2 escutcheon (cULus, FM)
Model FP escutcheon (cULus only)
Model CCP cover plate (cULus only)

Guards/Water Shields
F-7 Guard (cULus)
F-1 Guard (FM)
F-8 Guard/Water Shield (cULus)
F-5 Guard/Water Shield (FM)
S-1 Water Shield (cULus, FM)

Model KFR56 Pendent Sprinkler Components and Dimensions — Figure 1

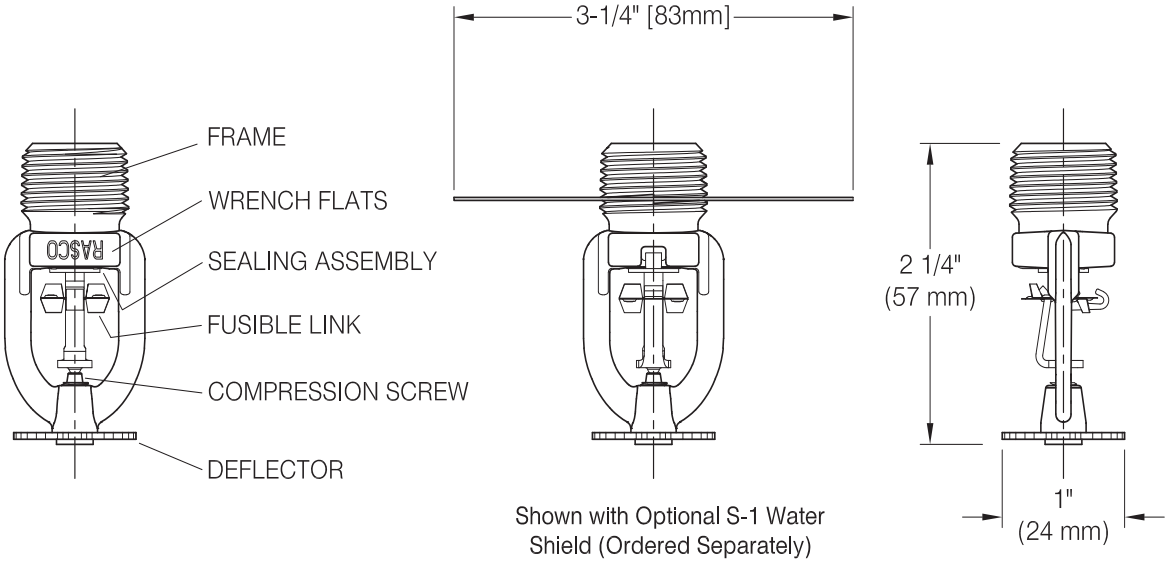

Model KFR56 Upright Sprinkler

SIN RA3624

Technical Specifications
Style: Upright
Threads: 1/2” NPT or ISO7-1R1/2
Nominal K-Factor: 5.6 (80 metric)
Max. Working Pressure:
cULus: 250 psi (17.2 bar)
FM, VdS, CE: 175 psi (12 bar)

Material Specifications
Thermal Sensor: Beryllium Nickel
Strut and Lever: Stainless Steel
Roto-clip: Stainless Steel
Sprinkler Frame: Brass Alloy
Cap: Bronze Alloy
Sealing Washer: Nickel with PTFE
Load Screw: Copper Alloy
Deflector: Brass Alloy

Sprinkler Wrench
Model W2
Model W14 (with guard installed)

Listings and Approvals
cULus Listed
FM Approved
VdS Approved
CE Certificate of constancy of performance 0786-CPR40314
UKCA: 0832-UKCA-CPR-S5075

Sprinkler Finishes
(See Table C)

Sensitivity
Quick-response

Temperature Ratings
165°F (74°C), Gray Link
212°F (100°C), White Link

Guards/Water Shields
F-1 Guard (cULus, FM)
F-3 Guard/Water Shield (cULus, FM)
Factory Installed Shield (cULus, FM)

Model KFR56 Upright Sprinkler Components and Dimensions

Figure 2

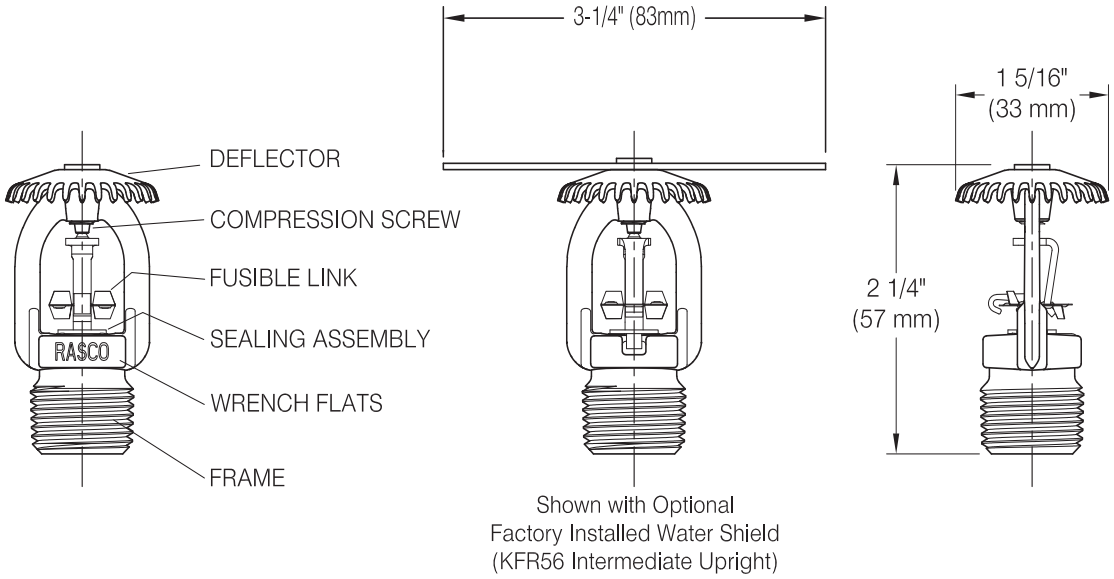

Model KFR56 HSW Horizontal Sidewall Sprinkler — SIN RA3634

Technical Specifications
Style: HSW or Recessed HSW
Threads: 1/2” NPT or ISO7-1R1/2
Nominal K-Factor: 5.6 (80 metric)
Max. Working Pressure:
cULus: 250 psi (17.2 bar)
FM, VdS, CE: 175 psi (12 bar)

Material Specifications
Thermal Sensor: Beryllium Nickel
Strut and Lever: Stainless Steel
Roto-clip: Stainless Steel
Sprinkler Frame: Brass Alloy
Cap: Bronze Alloy
Sealing Washer: Nickel with PTFE
Load Screw: Copper Alloy
Deflector: Brass Alloy

Sprinkler Wrenches
Model W2 (non-recessed)
Model W1 or W4 (recessed)
Model W14 (with guard installed)

Listings and Approvals
cULus Listed
FM Approved
VdS Approved
CE Certificate of constancy of performance 0786-CPR40312
UKCA: 0832-UKCA-CPR-S5073

Sprinkler Finishes
(See Table C)

Sensitivity
Quick-response

Temperature Ratings
165°F (74°C), Gray Link
212°F (100°C), White Link

Recessed Escutcheons
Model F1 escutcheon (cULus only)
Model F2 escutcheon (cULus, FM)
Model FP escutcheon (cULus only)

Guards
F-7 Guard (cULus)
F-4 Guard (FM)

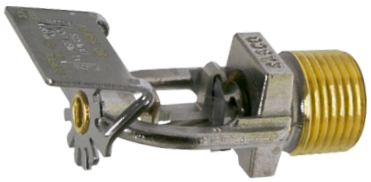

Model KFR56 HSW Sprinkler Components and Dimensions — Figure 3

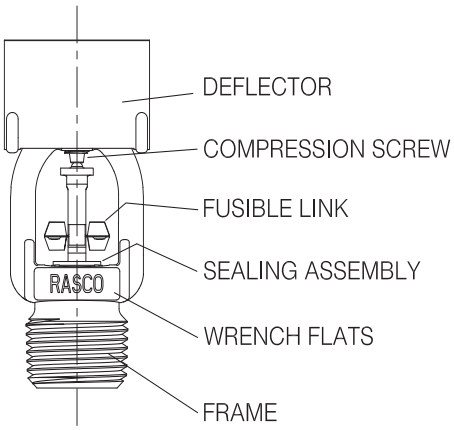

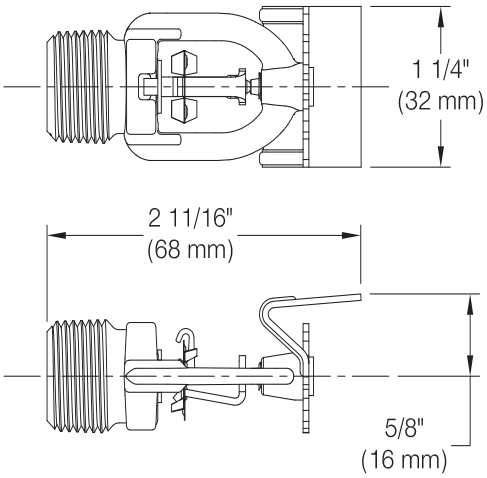

Recessed Escutcheon and Conical Concealed Cover Plate Dimensions **Table B**

Type	Adjustment Inch (mm)	Maximum Face of Fitting to Ceiling* Inch (mm)	Minimum Face of Fitting to Ceiling* Inch (mm)	Maximum Deflector Distance Below Ceiling Inch (mm)	Minimum Deflector Distance Below Ceiling Inch (mm)
F1	3/4 (19)	7/8 (24)	1/8 (3)	1-3/4 (44)	1 (25)
F2	1/2 (12)	5/8 (16)	1/8 (3)	1-3/4 (44)	1-1/4 (32)
FP	1/2 (12)	1-1/2 (38)	1 (25)	1 (25)	1/2 (12)
CCP	1/2 (12)	1-1/2 (38)	1 (25)	1 (25)	1/2 (12)

***Note:** Face of fitting to ceiling dimensions are based on nominal thread make up. Verify dimensions based on fitting and thread sealing method prior to installation.

Recessed Escutcheon and Conical Concealed Cover Plate Diagrams **Figure 4**

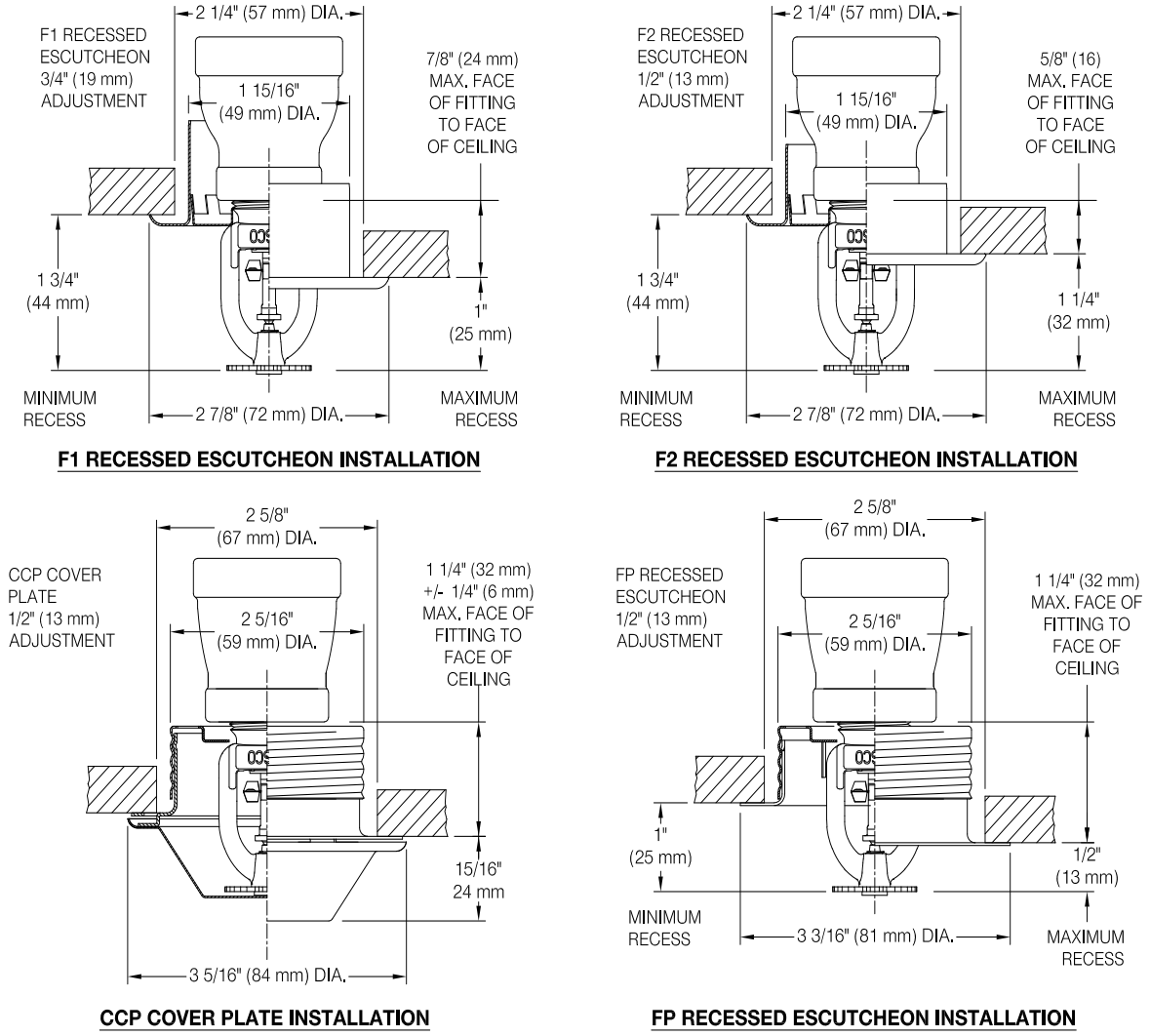

Note: Pendent sprinklers with CCP cover plates or FP recessed escutcheons shall not be installed in locations where the pressure in the ceiling is positive with respect to the pressure below the ceiling. Ensure that the openings in the cup are unobstructed following installation.

Model KFR56 HSW Recessed Escutcheon Diagrams

Figure 5

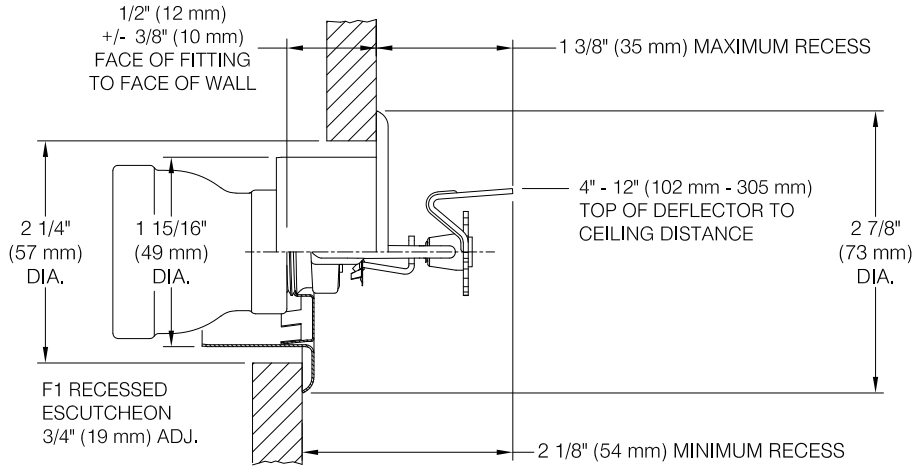

F1 RECESSED ESCUTCHEON INSTALLATION

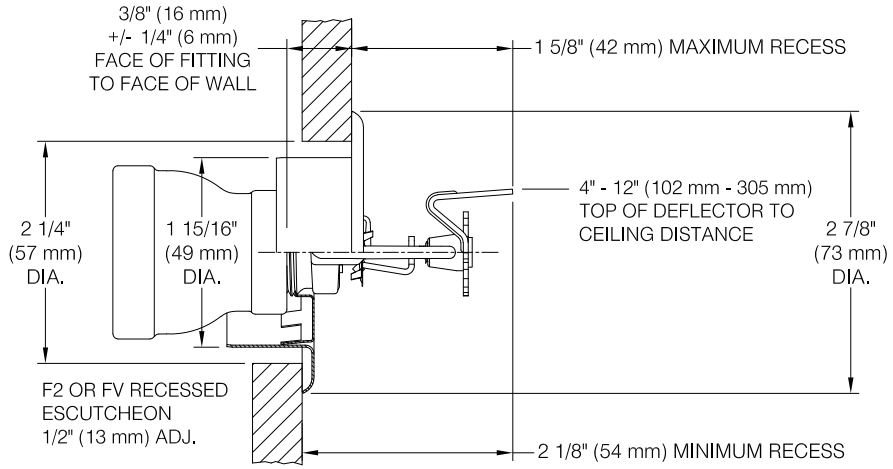

F2 RECESSED ESCUTCHEON INSTALLATION

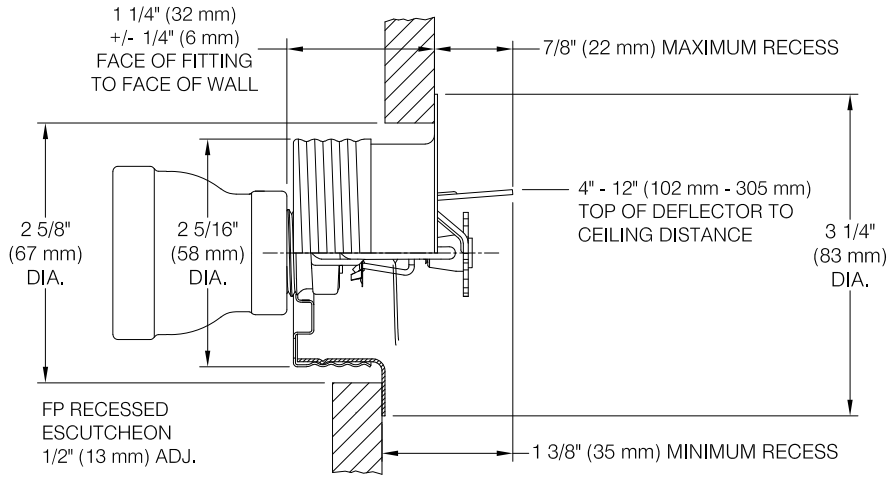

FP RECESSED ESCUTCHEON INSTALLATION

Note: Sidewall sprinklers with FP recessed escutcheons shall not be installed in locations where the pressure in or behind the wall is positive with respect to the pressure in the protected area. Ensure that the openings in the FP cup are unobstructed following installation.

Sprinkler, Escutcheon, and Cover Plate Finishes[1] **Table C**

Standard Finishes			Special Application Finishes		
Sprinkler	**F1, F2 , and FP[2] Escutcheons**	**CCP Cover Plate**	**Sprinkler**	**F1, F2 , and FP[2] Escutcheons**	**CCP Cover Plate**
Bronze	Brass	--	Bright Brass	Bright Brass	Bright Brass
Chrome Plated	Chrome Plated	Chrome Plated	Satin Chrome	Satin Chrome	Satin Chrome
White Polyester	White Polyester	White Paint	Black Polyester	Black Polyester	Black Paint
			Custom Color Polyester	Custom Color Polyester	Custom Color Paint

Notes:

[1] Paint or any other coating applied over the factory finish will void all approvals and warranties.

[2] The Model FP escutcheon assembly consists of an unfinished galvanized cup with a finished escutcheon ring.

Wrench

Model W2 (non-recessed)

Model W14 (with guard installed)

Model W1 (recessed & concealed)

Model W4 (alt. recessed & concealed)

Maintenance

Reliable Model KFR56 series sprinklers should be inspected and the sprinkler system maintained in accordance with NFPA 25, as well as the requirements of any Authorities Having Jurisdiction.

Prior to installation, sprinklers should remain in the original cartons and packaging until used. This will minimize the potential for damage to sprinklers that could cause improper operation or non-operation.

Do not clean sprinklers with soap and water, ammonia liquid or any other cleaning fluids. Remove dust by gentle vacuuming without touching the sprinkler.

Replace any sprinkler which has been painted (other than factory applied). A stock of spare sprinklers should be maintained to allow quick replacement of damaged or operated sprinklers.

Failure to properly maintain sprinklers may result in inadvertent operation or non-operation during a fire event.

Guarantee

For the Reliable Automatic Sprinkler Co., Inc. guarantee, terms, and conditions, visit www.reliablesprinkler.com.

Ordering Information

Specify the following when ordering.

Sprinkler

- Model (KFR56 Pendent, KFR56 Upright, KFR56 Upright Intermediate, or KFR56 HSW)
- Temperature Rating [165°F (74°C) or 212°F (100°C)]
- Threads (1/2" NPT or ISO 7-1 R3/4)
- Finish (See Table C)

Escutcheon or Coverplate

- Type (None, F1, F2, FP, or CCP)
- Finish (See Table C)

Guards/Water Shields

- See sprinkler information pages in this bulletin

Sprinkler Wrench

- W2 (Pendent, Upright, & HSW)
- W1 or W4 (Recessed Pendent & HSW, CCP)
- W14 (with guard installed)

P/N 9999970483

Sprinkler Guards, Guards with Shields, and Water Shields

Product Description

Sprinkler guards and water shields in this bulletin are independent components which are Listed or Approved with specific fire sprinklers. Sprinkler guards are designed to protect the sprinkler from damage due to incidental contact. Water shields are intended for use in racks or under grated walkways and prevent water from above from cooling and thereby delaying activation of the shielded sprinkler.

Refer to the guard selection table in this bulletin and sprinkler technical bulletins for listing and approval information regarding sprinkler and guard combinations.

Note: Guards, shields, and guard/shield combinations are NOT compatible with recessed sprinkler installations.

Model C Guards and Guard/Shield Assemblies

Model C-1 Guard
This guard is used with pendent, upright, horizontal sidewall, and vertical sidewall sprinklers and does not incorporate a water shield.

Model C-2 Guard
This guard is used with non-recessed dry pendent sprinklers.

Model C-3 Guards
This guard has a built-in water shield. When assembled to an upright sprinkler, the combination forms an upright intermediate sprinkler with guard.

Model C-5 Guard/Shield Assembly
This assembly is a Model C-1 guard supplied with either an S-1 water shield threaded onto 1/2"" sprinkler threads, or an S-2 water shield threaded onto 3/4" threads. The combination forms a pendent intermediate level sprinkler with guard.

Model D Guards and Guard/Shield Assemblies

Model D-1 Guard
These guards are used with pendent, upright, and horizontal sidewall sprinklers and do not incorporate a water shield.

Model D-3, D-6, and D-7 Guards
These guards have a built-in water shield. When assembled to an upright sprinkler, the combination forms an upright intermediate sprinkler with guard.

Model D-5 Guard/Shield Assembly
This assembly comprises a model D-1 guard supplied with either an S-1 water shield threaded onto 1/2"" sprinkler threads, or an S-2 water shield threaded onto 3/4" threads. The combination forms a pendent intermediate level sprinkler with guard.

Model D-8 Guard
This guard is used with pendent and upright sprinklers and does not incorporate a water shield.

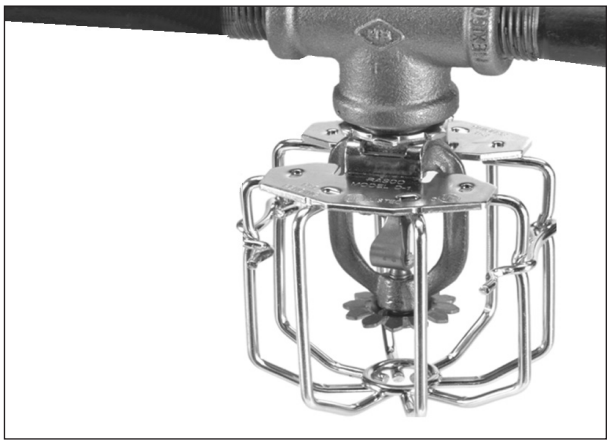

Example: Model D1 Sprinkler Guard

Model D-9 Guard/Shield Assembly
This assembly is a Model D-8 guard supplied with an S-2 water shield that is threaded onto 3/4" sprinkler threads. The combination forms a pendent intermediate level sprinkler with guard.

Model D-14 Guard
Model D-14 sprinkler guards are FM Approved for in-rack installation only. Each guard is supplied with a 1" locknut that must be threaded onto the sprinkler prior to sprinkler installation. Where permitted by Table A, the guards may also be used in combination with the S-5 water shield which replaces the locknut. The guard may be mounted to the sprinkler either prior to or following installation of the sprinkler into an outlet.

Model S Water Shields

Model S Shields are threaded water shields designed to create a pendent intermediate level sprinkler when installed on an approved sprinkler. The water shields are UL listed and/or FM Approved with the sprinklers listed in Table A, Listed and Approved Sprinkler, Guard, and Water Shield Combinations.

Model S-1
Model S-1 (3-1/4" [83mm] diameter) water shields are threaded onto 1/2" sprinkler inlet threads prior to installation

Model S-2 and S-3
Model S-2 (3-1/4" [83mm] diameter) and S-3 (3-3/4" [95mm] diameter) water shields are threaded onto 3/4" sprinkler inlet threads prior to installation.

Note: Model S-3 water shields are intended and listed for use on Model JL14 and JL17 ESFR storage sprinklers.

Model S-5
Model S-5 (4-1/2" [114mm] diameter) water shields are threaded onto 1" sprinkler inlet threads prior to installation.

Model 22 and 25 Sprinkler Guards

Model 22 and 25 sprinkler guards are FM Approved for in-rack installation only. Each guard is supplied with a 1" locknut that must be threaded onto the sprinkler prior to sprinkler installation. Where permitted by Table A, the guards may also be used in combination with the S-5 water shield which replaces the locknut. The guard is assembled to the sprinkler following installation of the sprinkler.

Model F Guards and Guards with Shields

Model F guards and guards with shields are specifically designed for use with KFR sprinklers and various F1 and F1FR sprinklers being transitioned to KFR frames. These sprinklers are designated as "NEW" in Table A, "Listed and Approved Sprinkler, Guard, and Water Shield Combinations."

Model F-1, F-2, F-4, and F-7
These guards are used with pendent, upright, horizontal sidewall, and vertical sidewall sprinklers and do not incorporate a water shield.

Model F-3 Guard
This guard has a built-in water shield. When assembled to an upright sprinkler, the combination forms an upright intermediate sprinkler with guard.

Model F-5 Guard/Shield Assembly
This assembly is a Model F-1 guard supplied with an S-1 water shield that is threaded onto 1/2" sprinkler threads. The combination forms a pendent intermediate level sprinkler with guard.

Model F-6 Guard/Shield Assembly
This assembly is a Model F-2 guard supplied with an S-2 water shield that is threaded onto 3/4" sprinkler threads. The combination forms a pendent intermediate level sprinkler with guard.

Model F-8 Guard/Shield Assembly
This assembly is a model F-7 guard supplied with either an S-1 water shield which is threaded onto 1/2"" sprinkler threads, or an S-2 water shield threaded onto 3/4" threads. The combination forms a pendent intermediate level sprinkler with guard.

Model C-1 Guards — **Figure 1**

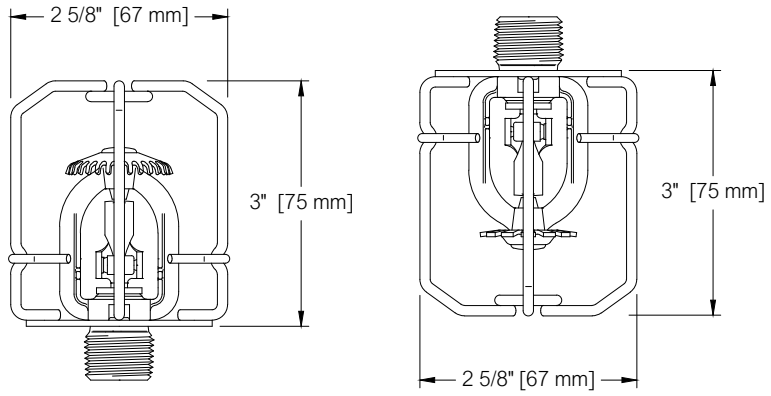

WITH UPRIGHT SPRINKLER — WITH PENDENT SPRINKLER

Model C-2 Guards — **Figure 2**

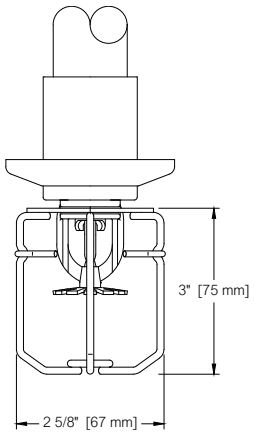

Model C-3 Guards and Water Shield — **Figure 3**

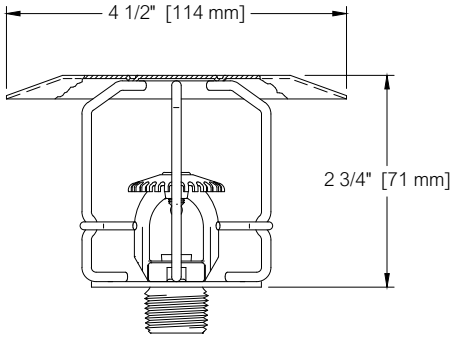

Model C-5 Guards and Water Shield

Figure 4

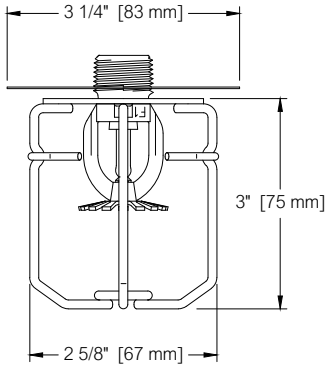

Model D-3 Guards and Water Shield

Figure 5

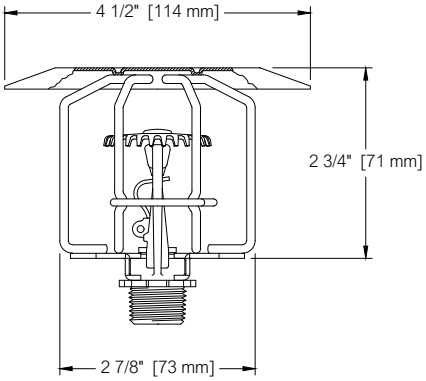

Model D-1 Guard

Figure 6

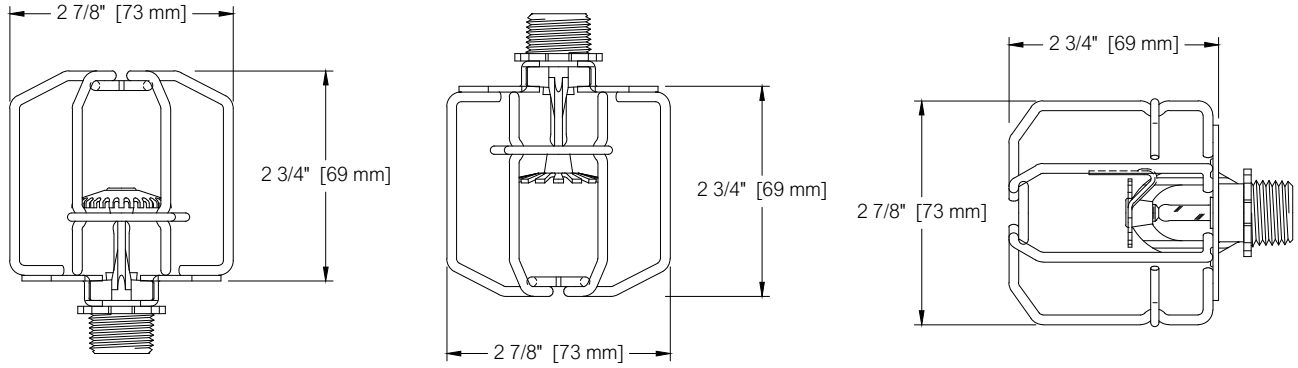

WITH UPRIGHT SPRINKLER

WITH PENDENT SPRINKLER

WITH SIDEWALL SPRINKLER

Model D-5 Guards and Water Shield

Figure 7

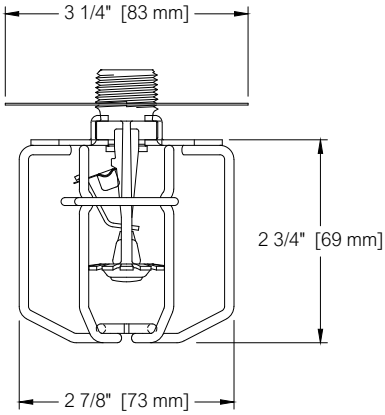

Model D-6 Guards and Water Shield

Figure 8

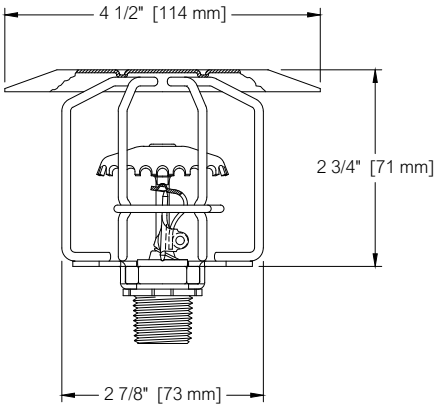

Model D-7 Guards and Water Shield **Figure 9**

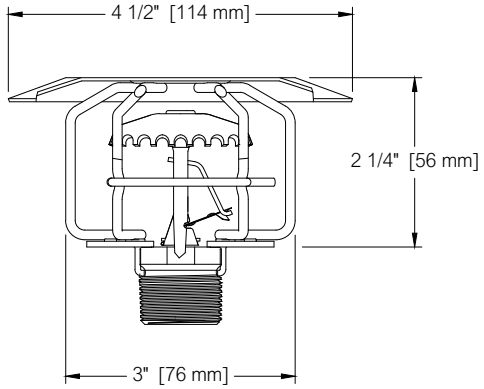

Model D-9 Guard and Water Shield **Figure 10**

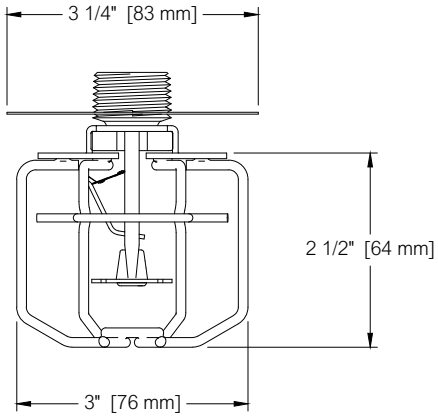

Model D-8 Guard **Figure 11**

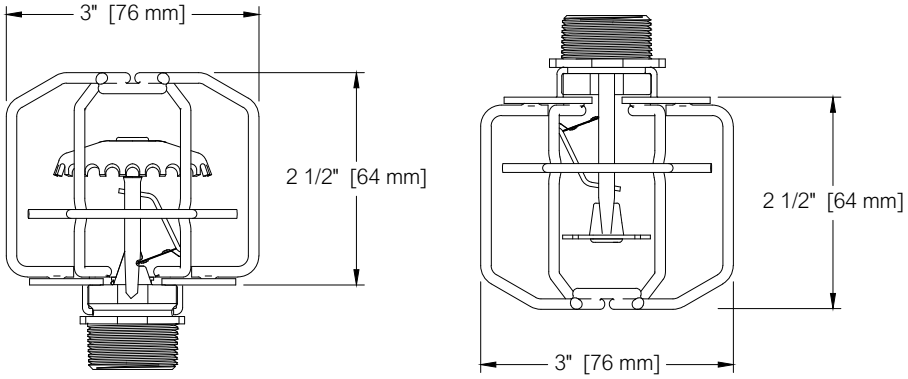

WITH UPRIGHT SPRINKLER

WITH PENDENT SPRINKLER

Model D-14 Guard **Figure 12**

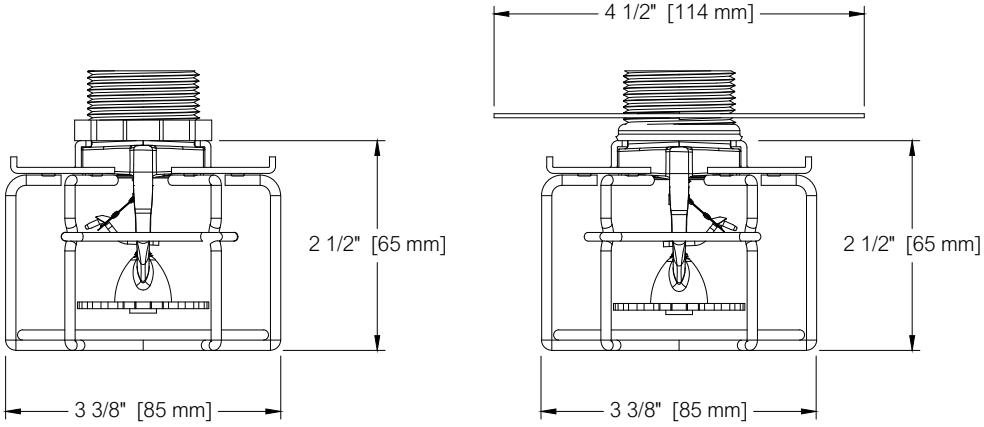

WITHOUT SHIELD

WITH S-5 SHIELD

Model S Water Shield **Figure 13**

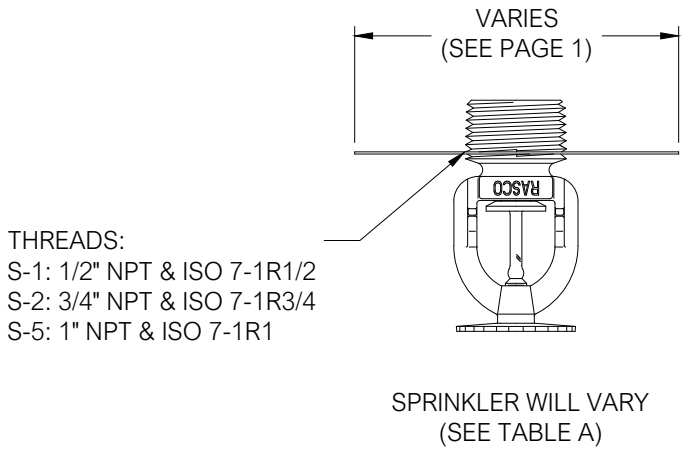

Model 22 Guard **Figure 14**

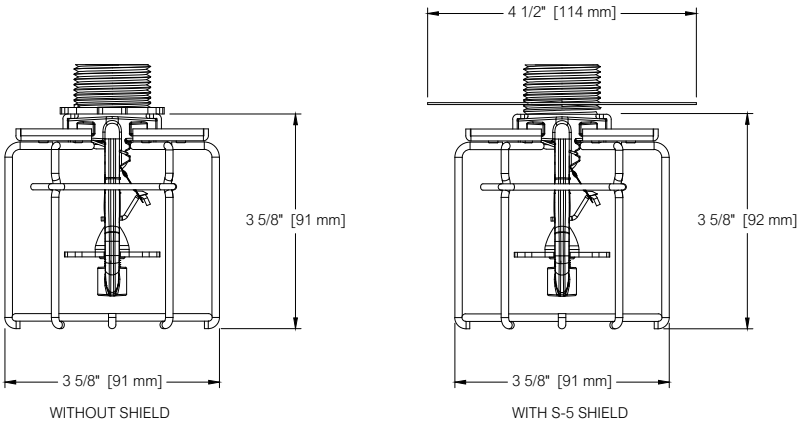

Model 25 Guard **Figure 15**

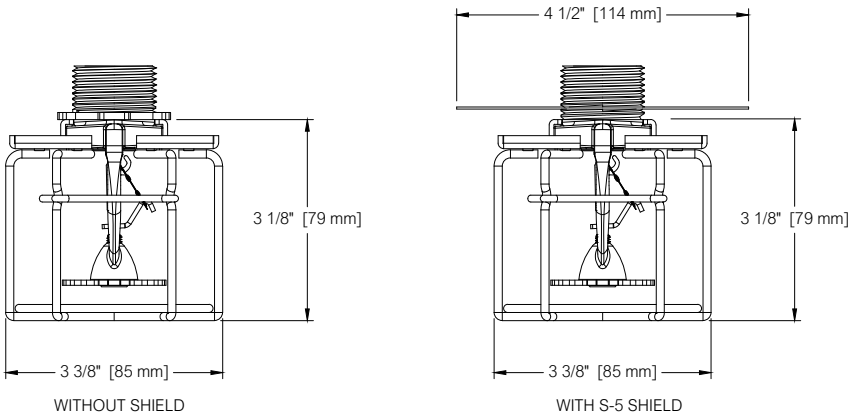

Model F-1 Guard **Figure 16**

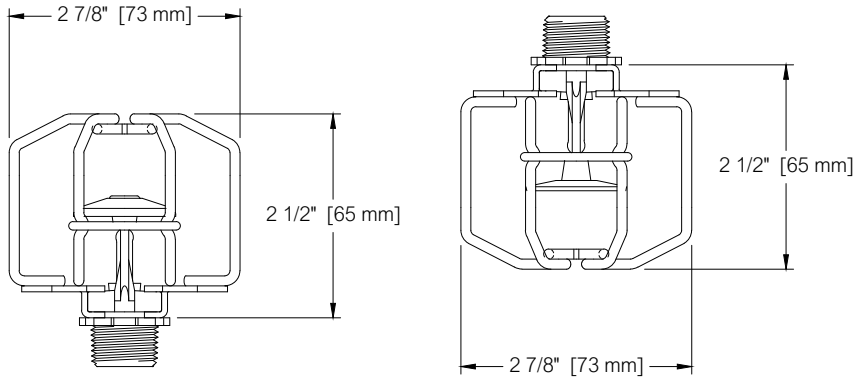

WITH UPRIGHT SPRINKLER WITH PENDENT SPRINKLER

Model F-2 Guard **Figure 17**

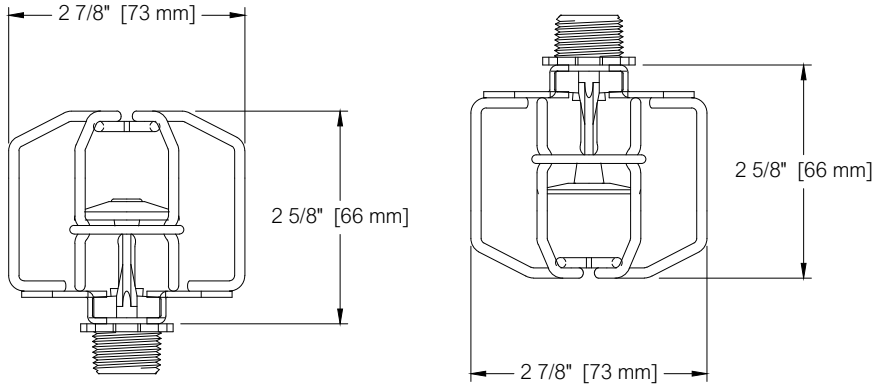

WITH UPRIGHT SPRINKLER WITH PENDENT SPRINKLER

Model F-3 Guard and Water Shield **Figure 18**

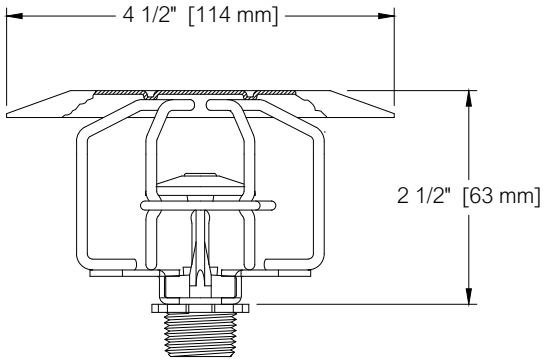

Model F-4 Guard **Figure 19**

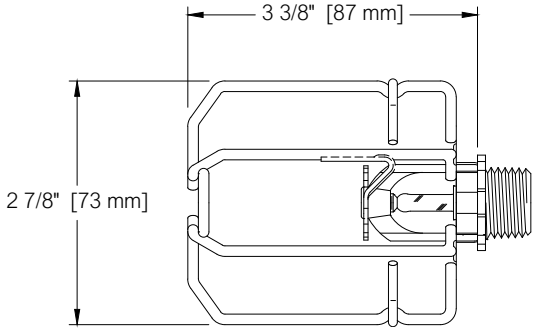

Model F-5 Guard and Water Shield **Figure 20**

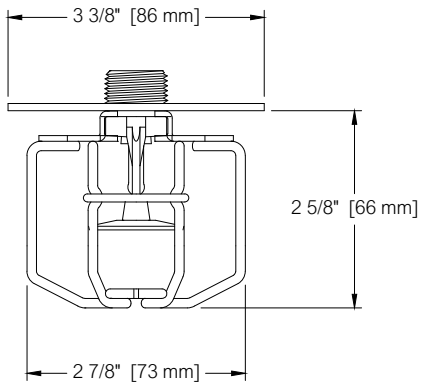

Model F-6 Guard and Water Shield **Figure 21**

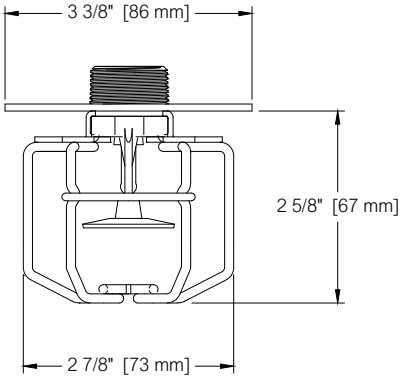

Model F-7 Guard **Figure 22**

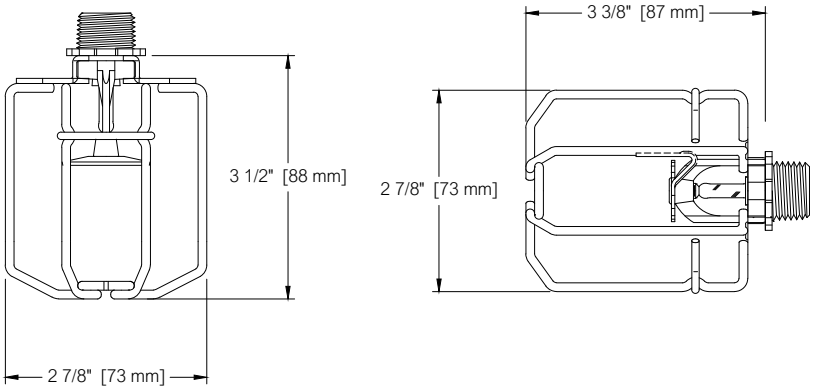

WITH PENDENT SPRINKLER

WITH SIDEWALL SPRINKLER

Model F-8 Guard and Water Shield **Figure 23**

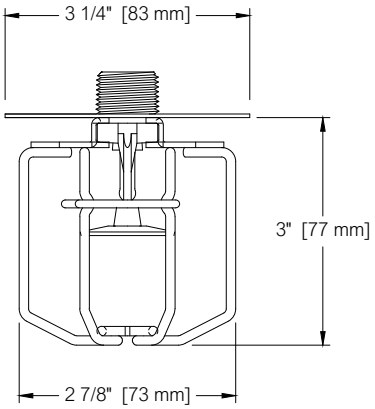

Listed and Approved Sprinkler, Guard, and Water Shield Combinations **Table A**

Sprinkler Model[1]	Type[2]	Sprinkler Identification Number (SIN)	Nominal K-Factor gpm/psi½ (L/min/bar½)	Sensitivity[3]	Threads NPT or ISO-7R	Approvals[4]	Guard, Guard and Shield, or Water Shield Model
F1-28 NEW[8]	Pendent	RA1311	2.8 (40)	SR	1/2	cULus	F-7 Guard F-8 Guard and Shield S-1 Shield
	Upright	RA1321	2.8 (40)	SR	1/2	cULus	F-1 Guard F-3 Guard and Shield
F1-42 NEW[8]	Pendent	RA1313	4.2 (60)	SR	1/2	cULus	F-7 Guard F-8 Guard and Shield S-1 Shield
	Upright	RA1323	4.2 (60)	SR	1/2	cULus	F-1 Guard F-3 Guard and Shield
F1-56 NEW[8]	HSW	RA1335	5.6 (80)	SR	1/2	cULus	F-7 Guard
						FM	F-4 Guard
	Pendent	RA1314	5.6 (80)	SR	1/2	cULus	F-7 Guard F-8 Guard and Shield S-1 Shield
						FM	F-1 Guard F-5 Guard and Shield S-1 Shield
	Upright	RA1325	5.6 (80)	SR	1/2	cULus	F-1 Guard F-3 Guard and Shield
						FM	F-1 Guard F-3 Guard and Shield
	VSW	RA1385	5.6 (80)	SR	1/2	cULus	NA
						FM	F-2 Guard
F1-56-300 NEW[8]	Pendent	RA2514	5.6 (80)	SR	1/2	cULus	F-7 Guard F-8 Guard and Shield S-1 Shield
	Upright	RA2525	5.6 (80)	SR	1/2	cULus	F-1 Guard F-3 Guard and Shield
F1-56SS	Pendent	RA6414	5.6 (80)	SR	1/2	cULus	D-1 Guard D-5 Guard and Shield S-1 Shield
						FM	C-1 Guard C-5 Guard and Shield D-1 Guard D-5 Guard and Shield S-1 Shield
	Upright	RA6424	5.6 (80)	SR	1/2	cULus	D-1 Guard C-3 Guard and Shield D-3 Guard and Shield
						FM	C-1 Guard C-3 Guard and Shield
F1-80 NEW[8]	Pendent	RA6212	8.0 (115)	SR	3/4	cULus	F-7 Guard F-8 Guard and Shield S-2 Shield
						FM	F-2 Guard F-6 Guard and Shield S-2 Shield
	Upright	RA6222	8.0 (115)	SR	3/4	cULus	F-1 Guard F-3 Guard and Shield
						FM	F-2 Guard F-3 Guard and Shield
F1-80SS	Pendent	RA6412	8.0 (115)	SR	3/4	cULus	D-1 Guard D-5 Guard and Shield S-2 Shield
						FM	C-1 Guard C-5 Guard and Shield S-2 Shield
	Upright	RA6422	8.0 (115)	SR	3/4	cULus	D-1 Guard C-3 Guard and Shield D-3 Guard and Shield
						FM	C-1 Guard C-3 Guard and Shield

Note: see table notes on page 12.

Table A cont.

Sprinkler Model[1]	Type[2]	Sprinkler Identification Number (SIN)	Nominal K-Factor gpm/psi½ (L/min/bar½)	Sensitivity[3]	Threads NPT or ISO-7R	Approvals[4]	Guard, Guard and Shield, or Water Shield Model
F1FR28 NEW[8]	Pendent	RA1411	2.8 (40)	QR	1/2	cULus	F-7 Guard F-8 Guard and Shield S-1 Shield
	Upright	RA1421	2.8 (40)	QR	1/2	cULus	F-1 Guard F-3 Guard and Shield
F1FR42 NEW[8]	Pendent	RA1413	4.2 (60)	QR	1/2	cULus	F-7 Guard F-8 Guard and Shield S-1 Shield
	Upright	RA1423	4.2 (60)	QR	1/2	cULus	F-1 Guard F-3 Guard and Shield
F1FR56 NEW[8]	HSW	RA1435	5.6 (80)	QR	1/2	cULus	F-7 Guard
						FM	F-4 Guard
	Pendent	RA1414	5.6 (80)	QR	1/2	cULus	F-7 Guard F-8 Guard and Shield S-1 Shield
						FM	F-1 Guard F-5 Guard and Shield S-1 Shield
	Upright	RA1425	5.6 (80)	QR	1/2	cULus	F-1 Guard F-3 Guard and Shield
						FM	F-1 Guard F-3 Guard and Shield
	VSW	RA1485	5.6 (80)	QR	1/2	cULus	NA
						FM	F-2 Guard
F1FR56-300 NEW[8]	HSW	RA2634	5.6 (80)	QR	1/2	cULus	F-7 Guard
	Pendent	RA2614	5.6 (80)	QR	1/2	cULus	F-7 Guard F-8 Guard and Shield S-1 Shield
	Upright	RA2625	5.6 (80)	QR	1/2	cULus	F-1 Guard F-3 Guard and Shield
F1FR56SS	Pendent	RA6514	5.6 (80)	QR	1/2	cULus	D-1 Guard D-5 Guard and Shield S-1 Shield
						FM	C-1 Guard C-5 Guard and Shield D-1 Guard D-5 Guard and Shield S-1 Shield
	Upright	RA6524	5.6 (80)	QR	1/2	cULus	D-1 Guard C-3 Guard and Shield D-3 Guard and Shield
						FM	C-1 Guard C-3 Guard and Shield
F1FR80 NEW[8]	Pendent	RA6312	8.0 (115)	QR	3/4	cULus	F-7 Guard F-8 Guard and Shield S-2 Shield
						FM	F-2 Guard F-6 Guard and Shield S-2 Shield
	Upright	RA6322	8.0 (115)	QR	3/4	cULus	F-1 Guard F-3 Guard and Shield
						FM	F-2 Guard F-3 Guard and Shield
F1FR80SS	Pendent	RA6512	8.0 (115)	QR	3/4	cULus	D-1 Guard D-5 Guard and Shield S-2 Shield
						FM	C-1 Guard C-5 Guard and Shield S-2 Shield
	Upright	RA6522	8.0 (115)	QR	3/4	cULus	D-1 Guard C-3 Guard and Shield D-3 Guard and Shield
						FM	C-1 Guard C-3 Guard and Shield

Note: see table notes on page 12.

Table A cont.

Sprinkler Model[1]	Type[2]	Sprinkler Identification Number (SIN)	Nominal K-Factor gpm/psi½ (L/min/bar½)	Sensitivity[3]	Threads NPT or ISO-7R	Approvals[4]	Guard, Guard and Shield, or Water Shield Model
F3-56 Dry	Pendent	R5314	5.6 (80)	SR	1	cULus, FM	C-2 Guard [5]
	HSW	R5334	5.6 (80)	SR	1	FM	C-2 Guard [5]
F3QR56 Dry	Pendent	R5714	5.6 (80)	QR	1	cULus, FM	C-2 Guard [5]
	HSW	R5734	5.6 (80)	QR	1	FM	C-2 Guard [5]
G	HSW	R1231	2.8 (40)	SR	1/2	cULus	D-1 Guard
		R1233	4.2 (60)	SR	1/2	cULus	D-1 Guard
		R1235	5.6 (80)	SR	1/2	cULus	D-1 Guard
						FM	C-1 Guard
		R1236	8.0 (115)	SR	1/2	cULus	D-1 Guard
		R1237	8.0 (115)	SR	3/4	cULus	D-1 Guard
	Pendent	R1011	2.8 (40)	SR	1/2	cULus	D-1 Guard
						FM	C-1 Guard
		R1013	4.2 (60)	SR	1/2	cULus	D-1 Guard
		R1015	5.6 (80)	SR	1/2	cULus	D-1 Guard D-5 Guard and Shield S-1 Shield
						FM	C-1 Guard C-5 Guard and Shield S-1 Shield
		R1017	8.0 (115)	SR	3/4	cULus	D-1 Guard D-5 Guard and Shield S-2 Shield
						FM	C-1 Guard C-5 Guard and Shield S-2 Shield
	Upright	R1021	2.8 (40)	SR	1/2	cULus	D-1 Guard
						FM	C-1 Guard
		R1023	4.2 (60)	SR	1/2	cULus	D-1 Guard
		R1025	5.6 (80)	SR	1/2	cULus	D-1 Guard C-3 Guard and Shield D-3 Guard and Shield
						FM	C-1 Guard C-3 Guard and Shield
		R1026	8.0 (115)	SR	1/2	cULus	D-1 Guard C-3 Guard and Shield D-3 Guard and Shield
						FM	C-1 Guard C3 Guard and Shield
		R1027	8.0 (115)	SR	3/4	cULus	D-1 Guard C-3 Guard and Shield D-3 Guard and Shield
						FM	C-1 Guard C-3 Guard and Shield
	VSW	R1285	5.6 (80)	SR	1/2	FM	C-1 Guard
GFR	HSW	R3131	2.8 (40)	QR	1/2	cULus	D-1 Guard
		R3133	4.2 (60)	QR	1/2	cULus	D-1 Guard
		R3135	5.6 (80)	QR	1/2	cULus	D-1 Guard
		R3137	8.0 (115)	QR	3/4	cULus	D-1 Guard
	Pendent	R3111	2.8 (40)	QR	1/2	cULus	D-1 Guard
		R3113	4.2 (60)	QR	1/2	cULus	D-1 Guard
		R3115	5.6 (80)	QR	1/2	cULus	D-1 Guard
		R3117	8.0 (115)	QR	3/4	cULus	D-1 Guard
						FM	C-5 Guard and Shield
	Upright	R3121	2.8 (40)	QR	1/2	cULus	D-1 Guard
		R3123	4.2 (60)	QR	1/2	cULus	D-1 Guard
		R3125	5.6 (80)	QR	1/2	cULus	C-3 Guard and Shield D-1 Guard D-3 Guard and Shield
		R3127	8.0 (115)	QR	3/4	cULus	C-3 Guard and Shield D-1 Guard D-3 Guard and Shield
						FM	C-3 Guard and Shield

Note: see table notes on page 12.

Table A cont.

Sprinkler Model[1]	Type[2]	Sprinkler Identification Number (SIN)	Nominal K-Factor gpm/psi½ (L/min/bar½)	Sensitivity[3]	Threads NPT or ISO-7R	Approvals[4]	Guard, Guard and Shield, or Water Shield Model
GL112	Pendent	R3216	11.2 (160)	QR	3/4	FM	D-8 Guard D-9 Guard and Shield S-2 Shield
	Upright	R3226	11.2 (160)	QR	3/4	FM	D-7 Guard and Shield D-8 Guard
GQR112	Pendent	R605	11.2 (160)	QR	3/4	FM	D-8 Guard D-9 Guard and Shield S-2 Shield
	Upright	R606	11.2 (160)	QR	3/4	FM	D-7 Guard and Shield D-8 Guard Water Shield (factory installed)
GSR112	Pendent	R607	11.2 (160)	SR	3/4	FM	D-8 Guard D-9 Guard and Shield S-2 Shield
	Upright	R608	11.2 (160)	SR	3/4	FM	D-7 Guard and Shield D-8 Guard Water Shield (factory installed)
GXLO	Pendent	R2916	11.2 (160)	SR	3/4	FM	D-8 Guard D-9 Guard and Shield S-2 Shield
	Upright	R2921	11.2 (160)	SR	3/4	cULus	D-6 Guard and Shield
						FM	D-7 Guard and Shield D-8 Guard
JL14	Pendent	RA1812	14.0 (200)	ESFR	3/4	FM	S-3 Shield
JL17	Pendent	RA1914	16.8 (240)	ESFR	3/4	FM	S-3 Sheild
KFR56	Pendent	RA3614	5.6 (80)	QR	1/2	cULus	F-7 Guard F-8 Guard and Shield S-1 Shield
						FM	F-1 Guard F-5 Guard and Shield S-1 Shield
	Upright	RA3624	5.6 (80)	QR	1/2	cULus	F-1 Guard F-3 Guard and Shield
						FM	F-1 Guard F-3 Guard and Shield
	HSW	RA3634	5.6 (80)	QR	1/2	cULus	F-7 Guard
						FM	F-4 Guard
KFR56-300	Pendent	RA3914	5.6 (80)	QR	1/2	cULus	F-7 Guard F-8 Guard/Water Shield S-1 Water Shield
	Upright	RA3924					F-1 Guard F-3 Guard/Water Shield
	HSW	RA3934					F-7 Guard
KFR80	Pendent	RA5412	8.0 (115)	QR	3/4	cULus	F-7 Guard F-8 Guard and Shield S-2 Shield
						FM	F-2 Guard F-6 Guard and Shield S-2 Shield
	Upright	RA5422	8.0 (115)	QR	3/4	cULus	F-1 Guard F-3 Guard and Shield
						FM	F-2 Guard F-3 Guard and Shield
N252EC	Pendent	RA0842	25.2 (360)	QR	1	FM	25 Guard [6]
P22	Pendent	R601	22.4 (320)	ESFR	1	FM	D-14 Guard[6] S-5 Shield[6][7]
P25	Pendent	R602	25.2(360)	ESFR	1	FM	D-14 Guard[6] S-5 Shield[6][7]

Note: see table notes on page 12.

Notes:

1. Sprinkler guards and water shields are listed and approved only for use with specific sprinklers. The use of any other guards or water shields on these sprinklers may impede their operation or distribution and negate all approvals and warranties.
2. HSW: Horizontal Sidewall; VSW: Vertical Sidewall
3. QR: Quick-response; SR: Standard-response; ESFR: Early Supression Fast Response.
4. In addition, SSL Approval for C-1, C-2, and C-3 guards and water shields.
5. Model C-2 guards are listed and work only with standard and HB type escutcheons. Model C-2 guards cannot be used with FP or F1 recessed escutcheons.
6. FM Approved for intermediate-level use only, such as in-rack, under conveyors, mezzanines, or other similar obstructions. Only for use with threaded sprinklers.
7. When used in combination with a guard, the S-5 Shield replaces the 1" lock washer provided with the guard.
8. Sprinklers designated as "NEW" are updated versions of legacy sprinklers and MUST use F-series guards and guards with shields.

Listings & Approvals

Refer to Table A. Listed and Approved Sprinkler, Guard, and Water Shield Combinations for information on Listings and Approvals applicable to each guard and water shield.

1. Listed by Underwriters Laboratories, Inc. and UL certified for Canada (cULus)
2. Certified by FM Approvals
3. Scientific Services Laboratories (SSL, Australia)*
   * For Models C1, C2, C3 guards.

Installation

Model C-1, C-2, and C-3 Guards

Install the sprinkler in accordance with the applicable sprinkler installation instructions prior to installing the Model C guard. With both clips unhooked, slightly spread open the guard. Insert steel plate into the installed sprinkler between the threads and the wrench flats. The steel plate tabs should face the sprinkler wrench flats and four contact points engage the sprinkler neck.

For Model C-2, the steel plate fits into the groove in each wrench flat and the guard is located by the notch in both steel plates. Snap the upper locking clip into place, then close the near clip. The guard is now securely installed in place. If locking clip requires too much force to snap closed or open, slightly flex the wires on both sides of the clip and either close or open the clip.

Model C-5 Guard/Shield Assembly

Prior to installing sprinkler into fitting, thread the Model S-1 (1/2") or S-2 (3/4") water shield onto the sprinkler. After installing sprinkler into fitting, install the Model C-1 Guard per the instructions above.

Model D Guards

Model D series guards and water shields are designed to be installed on the sprinkler prior to sprinkler installation. Assemble the guard on the sprinkler using the following technique:

With both cups unhooked, slightly spread open the guard. Insert steel plate into the installed sprinkler between the threads and the wrench flats. The steel plate tabs should face the sprinkler wrench flats and four contact points should engage the sprinkler neck.

Snap the upper locking clip (steel plates) into place. Close the lower clip at the top of the guard and slide it down to the notch. After installing the guard, thread EITHER a lock nut (for guard only) OR a water shield (for guard/shield assembly) onto the sprinkler threads. The final assembly can then be installed into a fitting using the wrench indicated in Table B "Wrench for Installation of Guard, Water Shield, and Sprinkler Assembly." Tighten the lock nut or water shield securely against the guard.

Model F Guards

Model F series guards and guards with shields are designed to be installed on the sprinkler prior to installation. The assembly is then installed with the wrench indicated in Table B, Wrench for Installation of Guard, Water Shield, and Sprinkler Assembly.

Models F-1, F-2, F-3, F-4 & F-7

Assemble the guard on the sprinklers using the technique described for the Model D-1, then install a 1/2" or 3/4" locking nut on the NPT threads until the nut is tight against the guard.

Models F-5, F-6, & F-8

Assemble the guard on the sprinklers using the technique described for the Model D-1, then install a 1/2" or 3/4" threaded water shield on the NPT threads until the shield is tight against the guard.

Model 22 & 25 Guards

Install the provided locknut on the sprinkler threads prior to installation of the sprinkler. Install the sprinkler in accordance with the applicable sprinkler installation instructions. With both clips unhooked, slightly spread open the guard. Insert the guard over the installed sprinkler so that the base plate of the guard attaches to the wrench flats of the sprinkler. Connect both locking clips to the adjacent tines of the guard. Tighten the locknut against the base plate of the guard.

Model S Water Shields

Model S water shields are designed to be installed on the sprinkler prior to installation. Thread the Model S water shield onto the sprinkler by hand, making sure that the shield does not pass by the end of the threads near the wrench boss. Install the sprinkler/shield assembly with the wrench indicated in the appropriate Technical Bulletin for the sprinkler.

Installation Notes

1. For all products incorporating a lock-nut feature, the lock-nut is part of the listed assembly. Failure to install the lock-nut will void the listing of the product and may lower the impact tolerance of the device.
2. The products in this bulletin are NOT compatible with recessed or concealed sprinkler installations.

Wrench for Installation of Guard, Water Shield, and Sprinkler Assembly — **Table B**

Guard/ Water Shield	Required Wrench for Installation of Guard, Water Shield, and Sprinkler Assembly
D-1	Model W13 K5.6 and smaller sprinklers
D-3	
D-5	
D-1	Model W14 K8.0 sprinklers
D-3	
D-5	
D-6	Model W15
D-7	
D-8	
D-9	
D-14	Model W16
F (All)	Model W14
K22	Model W16
K25	

Finishes

Guard Finishes — **Table C**

Standard	Special Application
Zinc plated with clear chromate	Enamel red paint Custom color paint Bright Chrome Satin Chrome

Notes:
1. Guards are formed from steel and are not considered corrosion resistant.
2. The Model C1 guard is available FM Approved in Stainless Steel 316.

Water Shield Finishes — **Table D**

S Series Water Shields	
Standard	**Special Application**
Galvanized	Enamel red paint Custom color paint

Note: Special application finishes are special order only and will require additional lead time.

Ordering Information

Specify:
- Guard, Guard with Shield, or Shield Model
- Sprinkler Thread Size (required for Model D-5 only)
- Finish (See tables C and D)
- Wrench (See table B)

Note: Factory installation of Models D and F guards is available at additional cost. Please contact your Reliable representative for details.

2707 70TH Avenue East
Tacoma, WA 98424

TEL: (253) 926.2290
FAX: (253) 922.6150

SECTION 2.0

HANGERS & SUPPORTS

Revolver Bracket
Fig. 551

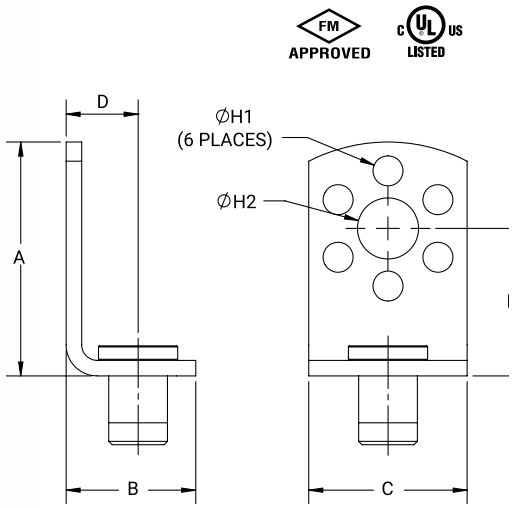

Fig. 551: Load Rating (lbs)Weight (lbs) • Dimension (in)

Rod Size	Rod Size	A	B	C	D	E	øH	Approx. Weight/100
⅜	425	2	2⅛	1⅜	⅝	1¼	¼	12

Material Specifications

Size Range
⅜" rod

Material
Carbon steel

Finish
Pre-Galvanized per ASTM A653

Service
For use on the side of wood, steel, and concrete walls and beams to support up to 4" NPS horizontal piping.

Patents
No. 6,568,642

Approvals
cULus Listed (UL 203), FM Approved (FM 1951-1952-1953), Complies with the requirements of MSS SP-58.

Installation
- Mount on the side of wood, steel, or concrete walls and beams using the fasteners listed in NFPA 13, the fasteners detailed in the cULus Listed Mounting Fasteners for Steel Pipe table, or alternate approved fasteners.
- Engage threaded rod with threaded knurl nut.

Features
- Universal fastener array optimizes the fastener size and placement for various structure types and pipe sizes.
- Backing nuts are not required for steel applications.
- Center mounting hole accepts ⅜" and ½" fasteners.

Ordering
Specify figure number, finish, and description.

PROJECT INFORMATION	APPROVAL STAMP
Project:	☐ Approved
Address:	☐ Approved as noted
Contractor:	☐ Not approved
Engineer:	Remarks:
Submittal Date:	
Notes 1:	
Notes 2:	

Revolver Bracket
Fig. 551

cULus Listed Mounting Fasteners for Steel Pipe

Structure	Fastener	QTY	Fastener Position	Pipe Size	Structure	Fastener	QTY	Fastener Position	Pipe Size
Wood	¼ x 1½" Lag Screw	1	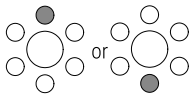	2"	Steel (16ga Min)	#14 x 1" TEK Screw 1/4 x 1" TEK Screw	2	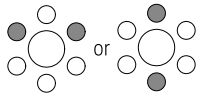	4"
Wood	¼ x 1½" Lag Screw #14 x 2" Wood Screw ¼ x 2" Wood Screw	2	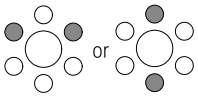	4"	Steel (18ga Min)	#10 x 1" TEK Screw #14 x 1" TEK Screw ¼ x 1" TEK Screw	1	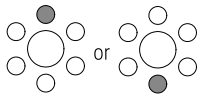	2½"
Wood[1]	⅜ x 2½" Lag Screw	1		2"	Steel (18ga Min)	#10 x 1" TEK Screw	3	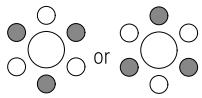	4"
Wood[1]	½ x 3" Lag Screw	1		4"	Steel (20ga Min)	#14 x 1" TEK Screw ¼ x 1" TEK Screw	1		2"
Wood & ⅝" Gypsum	#14 x 2" Lag Screw ¼ x 2" Lag Screw #14 x 2" TEK Screw ¼ x 2" TEK Screw	1	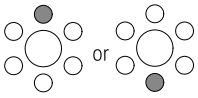	2"	Steel (20ga Min)	#10 x 1" TEK Screw #14 x 1" TEK Screw 1/4 x 1" TEK Screw	2	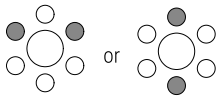	3"
Wood & ⅝" Gypsum	#14 x 2" Wood Screw ¼ x 2" Wood Screw	1	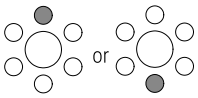	2"	Steel (20ga Min)	#14 x 1" TEK Screw 1/4 x 1" TEK Screw	3	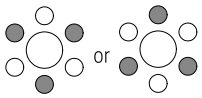	4"
Wood & ⅝" Gypsum	#14 x 2" Lag Screw ¼ x 2" Lag Screw #14 x 2" TEK Screw ¼ x 2" TEK Screw	2	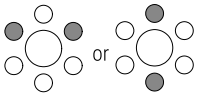	4"	Steel (20ga Min)	#10 x 1" TEK Screw	4		4"
Steel (14ga Min)	#14 x 1" TEK Screw ¼ x 1" TEK Screw	1	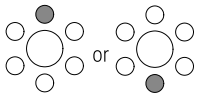	3"	Steel (22ga Min)	#10 x 1" TEK Screw #14 x 1" TEK Screw 1/4 x 1" TEK Screw	3	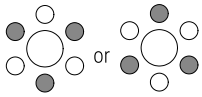	2½"

Note 1: No pre-drill.

asc-es.com

Building connections that last™

Revolver Bracket
Fig. 551

FM Approved Mounting Fasteners for Steel Pipe

Structure	Fastener	QTY	Fastener Position	Pipe Size	Structure	Fastener	QTY	Fastener Position	Pipe Size
Wood[1]	⅜ x 2 ½" Lag Screw	1		2"	Steel (16ga Min)	#14 x 1" TEK Screw ¼ x 1" TEK Screw	2	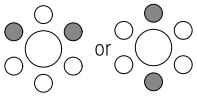	4"
Wood[1]	½ x 3" Lag Screw	1		4"	Steel (18ga Min)	#10 x 1" TEK Screw	3	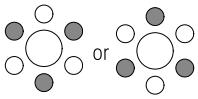	4"
					Steel (20ga Min)	#14 x 1" TEK Screw ¼ x 1" TEK Screw	3	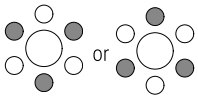	4"
					Steel (20ga Min)	#10 x 1" TEK Screw	4		4"

Note 1: No pre-drill.

asc-es.com

Building connections that last™

ASC Engineered Solutions

Universal C-type Clamp (Standard Throat)

Fig. 92 (Formerly Afcon Fig. 100)

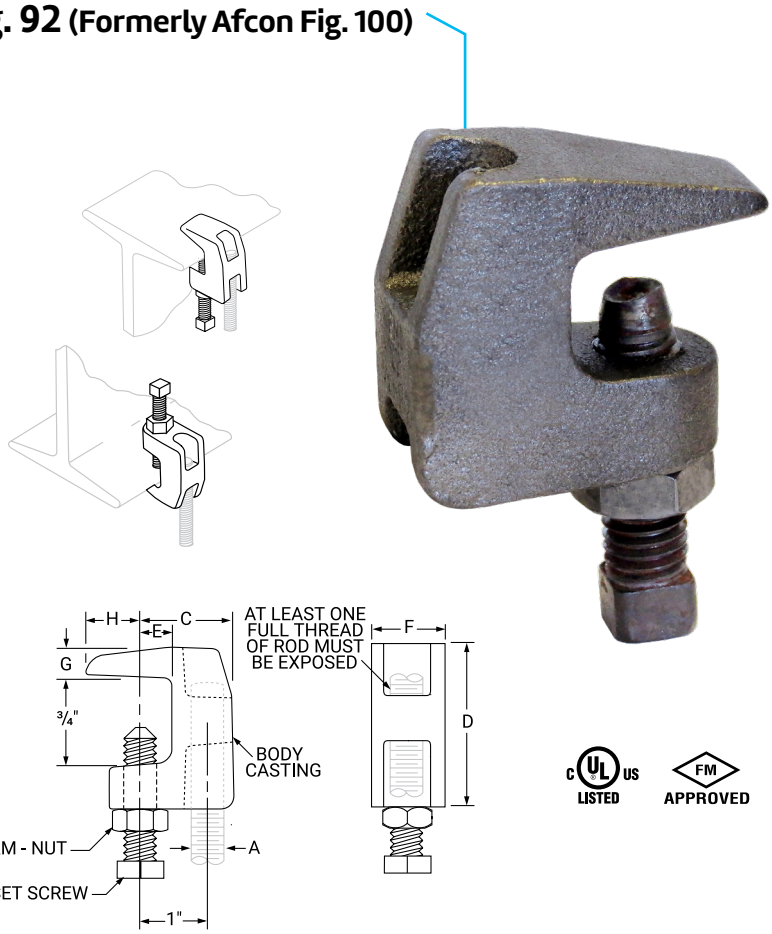

c UL us LISTED

FM APPROVED

Dimensions (In) - Load (Lbs) - Torque (In-Lbs) - Weight (Lbs)

Rod Size A	Set Screw Size	Torque Value	Max Loads ■ Top	Max Loads ■ Bottom	Weight	C	D	E	F	G	H
In.	In.	In.-Lbs.	Lbs.	Lbs.	Lbs.	In.	In.	In.	In.	In.	In.
3/8	3/8	60	500	250	0.34	1 5/16	1 9/16	9/16	13/16	3/8	1/2
1/2	1/2	125	950	760	0.63	1 3/8	1 13/16	1/2	1 1/16	7/16	23/32

Note:

■ Maximum temperature of 450° F

Material Specifications

Size Range
3/8" and 1/2"

Material
Ductile iron, hardened steel cup point set screw and locknut.

Finish
☐ Plain
☐ Zinc Plated (Hot-Dip Galvanized optional)

Service
Recommended for use under roof installations with bar joist type construction, or for attachment to the top or bottom flange of structural shapes where the vertical hanger rod is required to be offset from the edge of the flange and where the thickness of joist or flange does not exceed 3/4".

Approvals
Complies with Federal Specification A-A-1192A (Type 19 & 23), WW-H-171-E (Type 23), ANSI/MSS SP-69 and MSS SP-58 (Type 19 & 23).

UL, ULC Listed and FM Approved.

How to size
Size of clamp is determined by size of rod to be used.

Installation
Follow recommended set screw torque values per MSS-SP-69.

Features
- They may be attached to horizontal flanges of structural members in either the top beam or bottom beam positions.
- Secured in place by a cup-pointed Set Screw tightened against the flange. A Jam Nut is provided for tightening the Set Screw against the Body Casting.
- Thru tapping of the body casting permits extended adjustment of the threaded rod.
- Can be used with Fig 89X retaining clip for seismic applications.

Ordering
Specify rod size, figure number, name of clamp and finish.

ANVIL
An ASC Engineered Solution

PROJECT INFORMATION	APPROVAL STAMP
Project:	☐ Approved
Address:	☐ Approved as noted
Contractor:	☐ Not approved
Engineer:	Remarks:
Submittal Date:	
Notes 1:	
Notes 2:	

Fig. 69 (Formerly Afcon Fig. 300) Adjustable Swivel Ring, Tapped Per NFPA Standards

Size Range: 1/2" through 8"
Material: Carbon steel
Finish: Strap is Pre-Galvanized Zinc Material. Nut is Zinc Plated.
Service: Recommended for suspension of non-insulated **stationary** pipe line.
Maximum Temperature: 450° F
Approvals: Complies with Federal Specification A-A-1192A (Type 10), *WW-H-171-E (Type 10)*, and ANSI/MSS SP-58 (Type 10). UL Listed and FM Approved (Sizes 3/4" - 8").
Features:

- 1/2" - 2" sizes designed for use with steel and CPVC piping and manufactured with FBC System Compatible oil.
- Threads are countersunk so that they cannot become burred or damaged.
- Knurled swivel nut provides vertical adjustment after piping is in place.
- Captured swivel nut in the 1/2" through 6" sizes. The capture is permanent in the bottom portion of the band, allowing the hanger to be opened during installation if desired, but not allowing the nut to fall completely out.

Ordering: Specify size, figure number and name.
Non-captured nut also available upon request.

1/2" through 2" Size
Rounded Edge Design

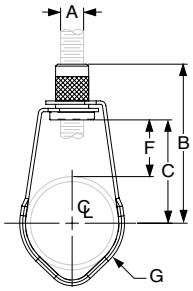

1/2" through 1" pipe

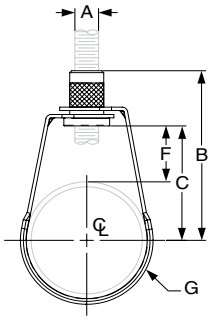

1 1/4" through 2" pipe

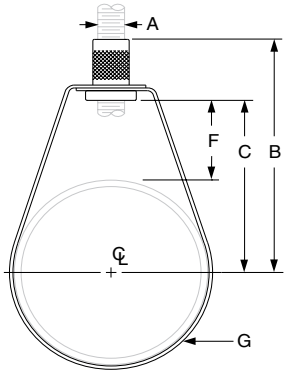

2 1/2" through 8" pipe

2 1/2" through 8" Size

FIG. 69: DIMENSIONS (IN) • LOADS (LBS) • WEIGHT (LBS)

Pipe Size	Max Load	Weight	Rod Size A	B	C	F	G Width
1/2	300	0.10	3/8	2 7/8	2	1 9/16	5/8
3/4		0.10		2 3/4	1 7/8	1 5/16	
1		0.10		2 9/16	1 11/16	1	
1 1/4		0.10		2 5/8	1 3/4	7/8	
1 1/2		0.10		2 3/4	1 7/8		
2		0.11		3 1/4	2 3/8	1 1/8	
2 1/2	525	0.20		4	2 3/4	1 5/16	3/4
3		0.20		3 13/16	2 15/16	1 3/16	
4	650	0.30		4 11/16	3 13/16	1 9/16	
5	1,000	0.54	1/2	5 5/16	4 3/8		
6		0.65		6 11/16	5 9/16	2 1/4	
8		1.00		8 9/16	7 9/16	3 1/4	

PROJECT INFORMATION	APPROVAL STAMP
Project:	☐ Approved
Address:	☐ Approved as noted
Contractor:	☐ Not approved
Engineer:	**Remarks:**
Submittal Date:	
Notes 1:	
Notes 2:	

Finish: Plain, Painted Green, or Pregalvanized **Order By:** No., Length and Finish

PS 100 - Steel Channel (1 5/8" x 3 1/4" x 12 ga.)

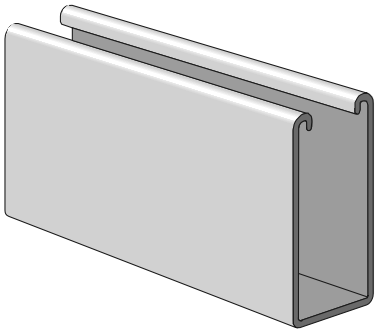

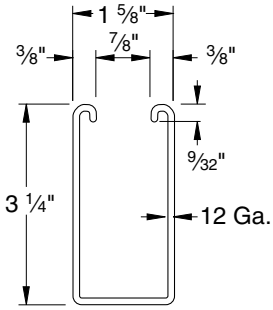

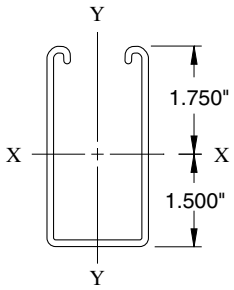

ELEMENTS OF SECTION

Weight (lbs./100 ft.)	Area of Section (Inch²)	X-X Axis			Y-Y Axis		
		Moment of Inertia (Inch⁴)	Section Modulus (Inch³)	Radius of Gyration (Inch)	Moment of Inertia (Inch⁴)	Section Modulus (Inch³)	Radius of Gyration (Inch)
305	0.897	1.099	0.628	1.107	0.359	0.442	0.695

PS 100 H - Channel with Holes

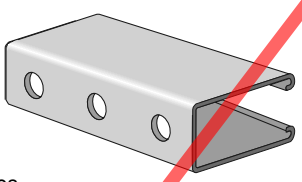

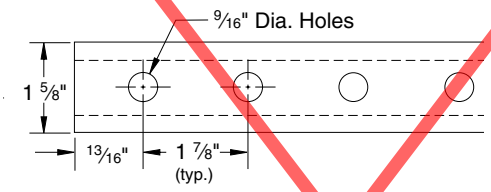

Weight: 300 lbs./100 ft.

PS 100 EH – Channel with Elongated Holes

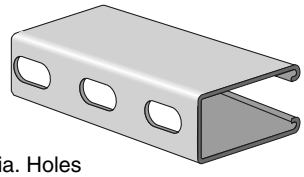

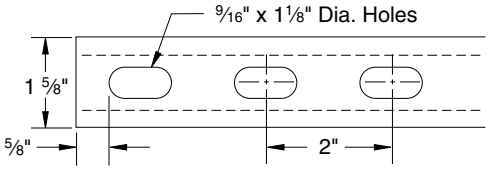

Weight: 300 lbs./100 ft.

PS 100 S - Channel with Slots

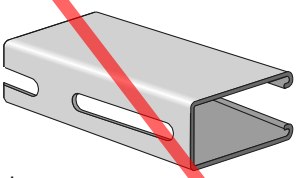

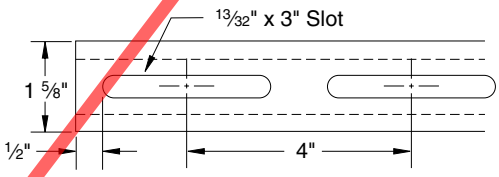

Weight: 300 lbs./100 ft.

PS 100 K06 – Channel with Knockouts

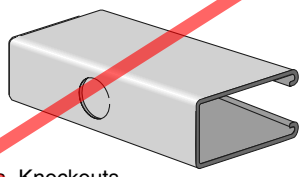

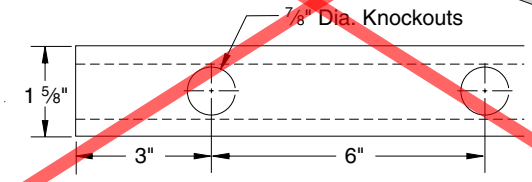

Weight: 305 lbs./100 ft.

2707 70TH Avenue East
Tacoma, WA 98424

TEL: (253) 926.2290
FAX: (253) 922.6150

SECTION 3.0

EARTHQUAKE BRACING

ASC Engineered Solutions

Model K Lateral Sway Brace
Fig. AF035

c UL us LISTED FM APPROVED

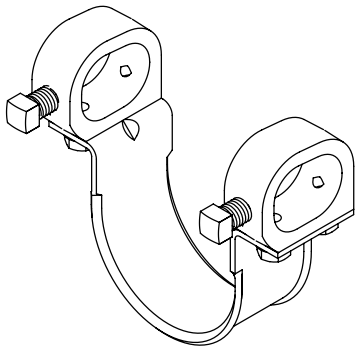

1" (DN25) to 3" (DN80) Service Pipe

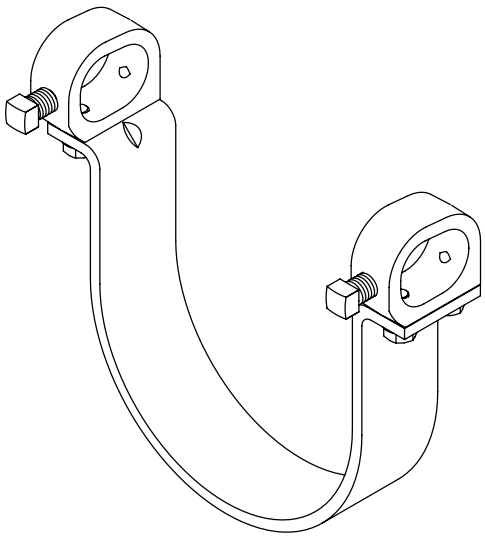

4" (DN100) to 12" Service Pipe

Material Specifications

Size Range:
Service Pipe Size: 1" – 12"
Brace Member: 1" – 2"

Material
Ductile Iron Casting with Carbon Steel Strap and Hardware

Finish
☐ Plain
☐ Electro-Galvanized

Service
A seismic lateral brace designed to connect a brace member to the service pipe. The AF035 rigidly braces steel and CPVC piping systems subjected to horizontal and vertical seismic loads.

Approvals
cULus Listed (ANSI/UL 203a) and FM Approved (FM 1950-13). Complies with NFPA 13, ASCE 7, IBC, & MSS SP-127 bracing requirements.

Features
- The set screw provides a visual indication that proper installation has been achieved
- Rounded edge design eliminates potential for abrasion of CPVC pipe

Patents
No. 7,516,922, No. 7,523,895

Ordering
Specify figure number, service pipe size, brace size, finish, and description.

AFCON
An ASC Engineered Solution

PROJECT INFORMATION	APPROVAL STAMP
Project:	☐ Approved
Address:	☐ Approved as noted
Contractor:	☐ Not approved
Engineer:	Remarks:
Submittal Date:	
Notes 1:	
Notes 2:	

ASC Engineered Solutions

Model K Lateral Sway Brace
Fig. AF035

FIG. AF035: Weight Per Size

Service Pipe Size	Brace Member Size			
	1" (DN25)	1¼"(DN32)	1½" (DN40)	2" (DN50)
1 (DN25)	1.60 lbs	1.80 lbs	2.00 lbs	2.28 lbs
1¼" (DN32)	1.68 lbs	1.88 lbs	2.08 lbs	2.36 lbs
1½" (DN40)	1.64 lbs	1.84 lbs	2.04 lbs	2.32 lbs
2" (DN50)	1.88 lbs	2.08 lbs	2.28 lbs	2.56 lbs
2½"	1.90 lbs	2.10 lbs	2.30 lbs	2.58 lbs
DN65	2.00 lbs	2.20 lbs	2.40 lbs	2.68 lbs
3" (DN80)	2.10 lbs	2.30 lbs	2.50 lbs	2.78 lbs
4" (DN100)	2.18 lbs	3.38 lbs	3.58 lbs	3.76 lbs
5" (DN125)	3.40 lbs	3.60 lbs	3.80 lbs	4.08 lbs
DN150	3.80 lbs	4.00 lbs	4.20 lbs	4.48 lbs
6"	3.90 lbs	4.10 lbs	4.30 lbs	4.58 lbs
DN200	4.70 lbs	4.90 lbs	5.10 lbs	5.38 lbs
8"	4.80 lbs	5.00 lbs	5.20 lbs	5.48 lbs
10"	5.60 lbs	5.80 lbs	6.00 lbs	6.28 lbs
12"	6.16 lbs	6.36 lbs	6.56 lbs	6.84 lbs

ASC Engineered Solutions

Model K Lateral Sway Brace
Fig. AF035

FIG. AF035 cULus Listing per ANSI/UL 203a (ASD)

Service Pipe Size	Standard Service Pipe	Speicalty Service Pipe	Horizontal Load Rating at Brace Angle			
			30°-44°	45°-59°	60°-90°	Listed
			lbf/kN	lbf/kN	lbf/kN	lbf/kN
1" (DN25)	Sch. 10 Sch. 40 CPVC Metric Pipe	Mega-Thread MLT / GL Eddy Thread EZ-Thread				
1¼" (DN32)	Sch. 10 Sch. 40 CPVC Metric Pipe	Mega-Flow MLT / GL Mega-Thread Eddy Flow Eddy Thread EZ-Thread				
1½" (DN40)	Sch. 10 Sch. 40 CPVC Metric Pipe	Mega-Flow MLT / GL Mega-Thread Eddy Flow Eddy Thread EZ-Thread Fire-Flo	625 2.78	884 3.93	1082 4.81	1250 5.56
2" (DN50)	Sch. 10 Sch. 40 CPVC Metric Pipe	Mega-Flow MLT / GL Mega-Thread Eddy Flow Eddy Thread EZ-Thread Fire-Flo				
2½"	Sch. 10 Sch. 40 CPVC	Mega-Flow Eddy Flow Fire-Flo				
DN65	Metric Pipe	–				
3" (DN80)	Sch. 10 Sch. 40 CPVC Metric Pipe	Mega-Flow Eddy Flow Fire-Flo				
4" (DN100)	Sch. 10 Sch. 40 Metric Pipe	Mega-Flow Eddy Flow Fire-Flo				
5" (DN125)	Sch. 10 Sch. 40 Metric Pipe	–				
DN150	Metric Pipe	–	942 4.19	1333 5.93	1632 7.26	1885 8.38
6"	Sch. 10 Sch. 40	Mega-Flow				
DN200	Metric Pipe	–				
8"	0.188" wall Sch. 40	–				
10"	0.188" wall Sch. 40	–				
12"	0.188" wall Sch. 40	–	1125 5.00	1591 7.08	1948 8.67	2250 10.01

1) Brace Angles are determined from Vertical.
2) Sch. 10 & 0.188" Wall Load Ratings may be used for any thicker wall pipe of the same diameter.
3) Listed load ratings reduced for angle ranges in accordance with NFPA 13-2019 Table 18.5.2.3.
4) See table below for UL listed specialty pipes & UL Listed metric service pipes.
5) Load Ratings reflect 1" (DN25) – 2" (DN50) brace members. See table below for listed brace members.
6) Minimum safety factor of 2.2 in accordance with NFPA 13-2019 Section A.18.5.2.3.

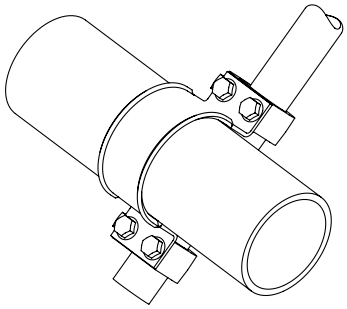

Lateral Application

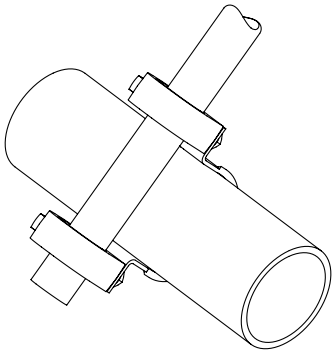

Lateral Application

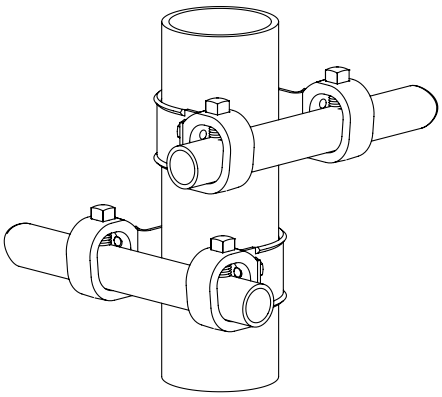

Riser Application

asc-es.com

Building connections that last™

ASC Engineered Solutions

Model K Lateral Sway Brace
Fig. AF035

FIG. AF035 cULus Listing Per UL 203a (ASD) For NFPA 13-2016 Editions Or Earlier

UL's current Listings are predicated on installation in accordance with the latest edition of NFPA 13. The 2016 and earlier editions of NFPA 13 referenced a minimum safety factor of 1.5 for the load rating as compared to 2.2 for the current edition. The load ratings noted in this table are consistent with the historical cULus Listings that were evaluated to the requirements of UL 203A, Outline of Investigation for Sway Brace Devices for Fire Sprinkler System Piping, based upon a minimum safety factor of 1.5 in accordance with the earlier editions of NFPA 13. The load ratings based upon the 2016 or earlier editions of NFPA 13 should only be used where approved by the Authority Having Jurisdiction (AHJ).

Service Pipe Size	Standard Service Pipe	Speicalty Service Pipe	Horizontal Load Rating at Brace Angle			
			30°-44°	45°-59°	60°-74°	75°-90°
			lbf/kN	lbf/kN	lbf/kN	lbf/kN
1" (DN25)	Sch. 10 Sch. 40 Metric Pipe	Mega-Thread MLT / GL Eddy Thread EZ-Thread				
1¼" (DN32)	Sch. 10 Sch. 40 Metric Pipe	Mega-Flow MLT / GL Mega-Thread Eddy Flow Eddy Thread EZ-Thread				
1½" (DN40)	Sch. 10 Sch. 40 Metric Pipe	Mega-Flow MLT / GL Mega-Thread Eddy Flow Eddy Thread EZ-Thread Fire-Flo				
2" (DN50)	Sch. 10 Sch. 40 Metric Pipe	Mega-Flow MLT / GL Mega-Thread Eddy Flow Eddy Thread EZ-Thread Fire-Flo				
2½"	Sch. 10 Sch. 40 Metric Pipe	Mega-Flow Eddy Flow Fire-Flo	1382 6.15	1955 8.70	2393 10.65	2765 15.52
DN65	Metric Pipe	–				
3" (DN80)	Sch. 10 Sch. 40 Metric Pipe	Mega-Flow Eddy Flow Fire-Flo				
4" (DN100)	Sch. 10 Sch. 40 Metric Pipe	Mega-Flow Eddy Flow Fire-Flo				
5" (DN125)	Sch. 10 Sch. 40 Metric Pipe	–				
DN150	Metric Pipe	–				
6"	Sch. 10 Sch. 40	Mega-Flow				
DN200	Metric Pipe	–				
8"	0.188" Wall Sch. 40	–				
10"	0.188" Wall Sch. 40	–				
12"	0.188" Wall Sch. 40	–	1870 8.32	2644 11.77	3238 14.40	3740 16.64

1) Brace Angles are determined from Vertical.
2) Sch. 10 & 0.188" Wall Load Ratings may be used for any thicker wall pipe of the same diameter.
3) Listed load ratings reduced for angle ranges in accordance with NFPA 13-2016 Section A.9.3.5.2.3.
4) See table below for UL listed specialty pipes & UL Listed metric service pipes.
5) Load Ratings reflect 1" (DN25) – 2" (DN50) brace members. See table below for listed brace members.
6) Minimum safety factor of 2.2 in accordance with NFPA 13-2016 Section A.9.3.5.2.3.

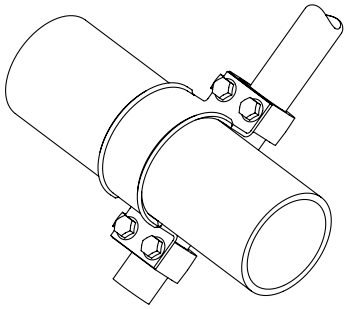

Lateral Application

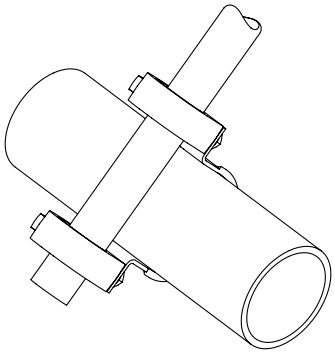

Lateral Application

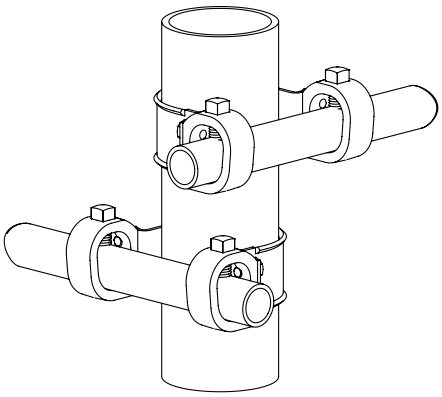

Riser Application

asc-es.com

Building connections that last™

ASC Engineered Solutions

Model K Lateral Sway Brace
Fig. AF035

FIG. AF035 FM Approved (Listing) per FM 1950-13 (ASD)

Service Pipe Size	Standard Service Pipe	Speicalty Service Pipe	Horizontal Load Rating at Brace Angle			
			30°-44°	45°-59°	60°-74°	75°-90°
			lbf/kN	lbf/kN	lbf/kN	lbf/kN
1" (DN25)	Sch. 10 Sch. 40 Metric Pipe	Mega-Thread MLT / GL Eddy Thread EZ-Thread	1660 7.38	2350 10.45	2880 12.81	3210 14.28
1¼" (DN32)	Sch. 10 Sch. 40 Metric Pipe	Mega-Flow MLT / GL Mega-Thread Eddy Flow Eddy Thread EZ-Thread				
1½" (DN40)	Sch. 10 Sch. 40 Metric Pipe	Mega-Flow MLT / GL Mega-Thread Eddy Flow Eddy Thread EZ-Thread Fire-Flo	1540 6.85	2170 9.65	2660 11.83	2970 13.21
2" (DN50)	Sch. 10 Sch. 40 Metric Pipe	Mega-Flow MLT / GL Mega-Thread Eddy Flow Eddy Thread EZ-Thread Fire-Flo				
2½"	Sch. 10 Sch. 40	Mega-Flow Eddy Flow Fire-Flo	1270 5.65	1790 7.96	2200 9.79	2450 10.90
DN65	Metric Pipe	–				
3" (DN80)	Sch. 10 Sch. 40 Metric Pipe	Mega-Flow Eddy Flow Fire-Flo				
4" (DN100)	Sch. 10 Sch. 40 Metric Pipe	Mega-Flow Eddy Flow Fire-Flo	1020 4.54	1450 6.45	1770 7.87	1980 8.81
5" (DN125)	Sch. 10 Sch. 40 Metric Pipe	–	860 3.83	1220 5.43	1490 6.63	1660 7.38
DN150	Metric Pipe	–				
6"	Sch. 10 Sch. 40	Mega-Flow				
DN200	Metric Pipe	–	540 2.40	770 3.43	950 4.23	1060 4.72
8"	0.188" Wall Sch. 40	–				

1) Brace Angles are determined from Vertical.
2) Sch. 10 & 0.188" Wall Load Ratings may be used for any thicker wall pipe of the same diameter.
3) See table below for FM listed specialty pipes & FM Listed metric service pipes.
4) Load Ratings reflect 1" (DN25) – 2" (DN50) brace members. See table below for listed brace members.
5) Minimum safety factor of 1.5 in accordance with NFPA 13-2016 Section A.9.3.5.2.3. To convert the load ratings above to a safety factor of 2.2 per NFPA 13-2019 Section A.18.5.2.3, multiply load ratings by a factor of 0.68.
5) To convert to LRFD Load Ratings, ASD Load Ratings may be multiplied by a factor of 1.5.

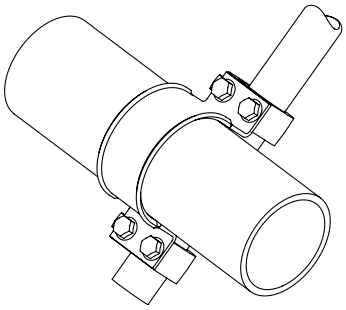

Lateral Application

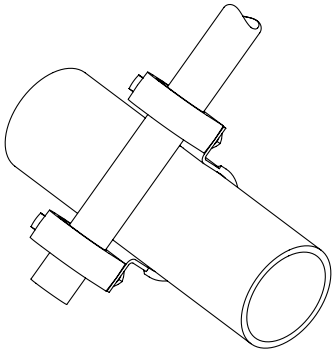

Lateral Application

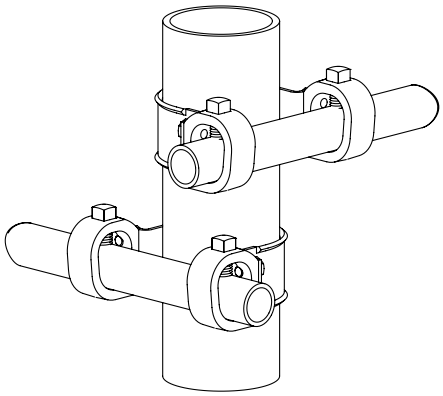

Riser Application

asc-es.com

Building connections that last™

Model K Lateral Sway Brace
Fig. AF035

1 Place the AF035 over the service pipe to be braced.

2 Insert the brace member through the cast hoop ends.
The end of the brace pipe shall extend at least 1" (25.4 mm) past the cast hoop ends.

3 Hand tighten the set screws until they contact the brace member.
Continue to torque the set screws until the heads bottom out on the cast hoop ends.

4 Tighten per the fastener or structural attachment specifications.

5 Ensure the brace angle is within the specified range.

Notes: The brace member may be installed above or below the service pipe.

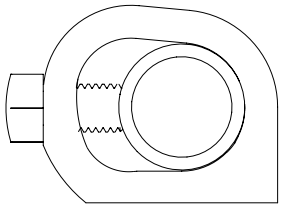

Set Screw Installation

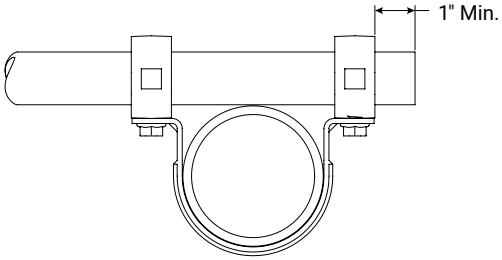

FIG. AF035 cULus Listed & FM Approved Brace Members

Brace Member	Brace Size	Standard (or Equivalent)	UL	FM
Sch. 40 NPS Pipe	1", 1¼", 1½", 2"	ASTM A53, A106, A135, or A795	✓	✓
Sch. 40 Metric Pipe	DN25 DN32 DN40 DN50	KS S 3562	✓	✓
		EN10255H		✓
Metric Pipe		GB/T 3091		✓
		JIS G3454		✓

FIG. AF035 cULus Listed & FM Approved Metric Service Pipes

Service Pipe Standard (or Equivalent)	Service Pipe Size	UL	FM
KS D 3507 KS D 3537	DN25 DN32 DN40 DN50 DN65 DN80 DN100 DN125 DN150 DN200	✓	✓
KS D 3562 Sch. 40		✓	✓
GB/T 3091 GB/T 3092			✓
JIS G3452			✓
EN 10255M			✓
EN 10255H			✓

Notes:
ASC Engineered Solutions™ brand bracing components are designed to be compatible ONLY with other ASC Engineered Solutions brand bracing components, resulting in a Listed seismic bracing assembly. Updated UL listing information may be viewed at www.ul.com and updated FM approval information may be viewed at www.approvalguide.com.

Disclaimer:
ASC Engineered Solutions does not provide any warranties and specifically disclaims any liability whatsoever with respect to ASC bracing products and components that are used in combination with products, parts or systems not manufactured or sold by ASC. In no event shall ASC be liable for any incidental, direct, consequential, special or indirect damages or lost profits where non-ASC bracing components have been, or are used.

Seis Brace® Seismic Fire Protection Design Tool may be accessed at www.seisbrace.com

asc-es.com

Building connections that last™

ASC Engineered Solutions

Universal Swivel Attachment
Fig. AF700

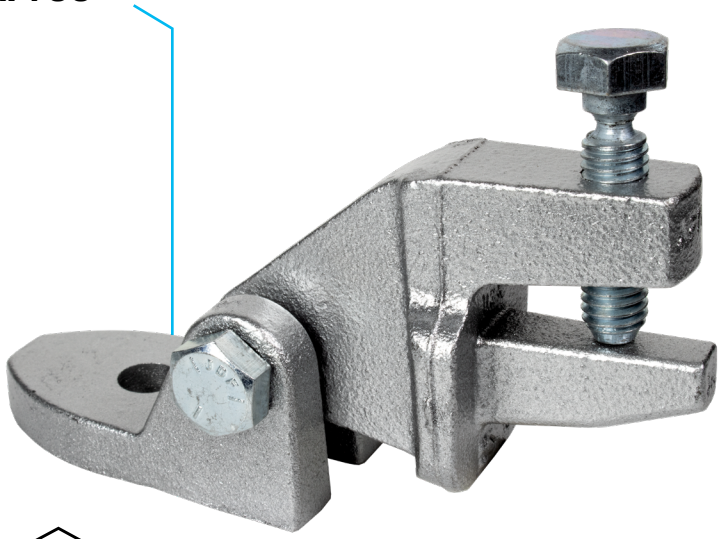

c UL us LISTED FM APPROVED

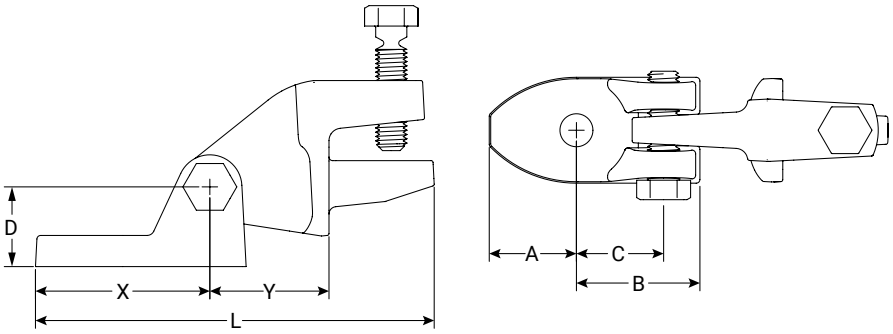

FIG. AF700 Dimensions and Weight

A	B	C	D	L	X	Y	Weight
In./mm	In./mm	In./mm	In./mm	In./mm	In./mm	In./mm	lbs/kgs
1.40	1.983	1.400	1.280	6.40	2.80	1.91	2.25
35.56	50.37	35.56	32.51	162.6	71.1	48.5	1.02

Notes:

ASC Engineered Solutions™ brand bracing components are designed to be compatible ONLY with other ASC Engineered Solutions brand bracing components, resulting in a Listed seismic bracing assembly. Updated UL listing information may be viewed at www.ul.com and updated FM approval information may be viewed at www.approvalguide.com.

Material Specifications

Size Range
Brace Member: See Table
Anchors: ½"- ¾" (M12—M18)

Material
Ductile Iron with Carbon Steel Hardware

Finish
☐ Plain
☐ Electro-Galvanized per ASTM B633

Service
A seismic swivel attachment designed to connect a brace member to the building structure or to a seismic structural attachment. The AF700 rigidly braces piping systems subjected to horizontal and vertical seismic loads.

Approvals
cULus Listed (ANSI/UL 203a)), FM Approved (FM 1950-13), & FM Tested (FM 1950-16). FM Tested (ANSI/FM 1950-16). Complies with NFPA 13, ASCE 7, IBC, & MSS SP-127 bracing requirements.

Features
- The set screw provides a visual indication that proper installation has been achieved
- Eliminates brace member eccentricity by concentrically loading 1" and 1 ¼" brace pipes

Ordering
Specify figure number, fastener size, finish and description.

Seis Brace® Seismic Fire Protection Design Tool may be accessed at www.seisbrace.com

AFCON
An ASC Engineered Solution

PROJECT INFORMATION	APPROVAL STAMP
Project:	☐ Approved
Address:	☐ Approved as noted
Contractor:	☐ Not approved
Engineer:	Remarks:
Submittal Date:	
Notes 1:	
Notes 2:	

ASC Engineered Solutions

Universal Swivel Attachment
Fig. AF700

FIG. AF700 cULus Listing per ANSI/UL 203a (ASD)

Brace Member	Fastener Size	Horizontal Load Rating at Brace Angle			
		30°- 44°	45°- 59°	60°- 90°	Listed
1" – 2" Sch 40 Pipe (DN25 – DN50)	½"- ¾" (M12-M18)	942 lbf (4.19 kN)	1333 lbf (5.93 kN)	1632 lbf (7.26 kN)	1885 lbf (8.38 kN)

1) Load ratings may apply to NPFA 13 fastener orientations A, B, C, D, E, F, G, H, or I.
2) Brace Angles are determined from Vertical.
3) Listed load ratings reduced for angle ranges in accordance with NFPA 13–2019 Table 18.5.2.3.
4) See table below for listed brace members.
5) Minimum safety factor of 2.2 in accordance with NFPA 13–2019 Section A.18.5.2.3.

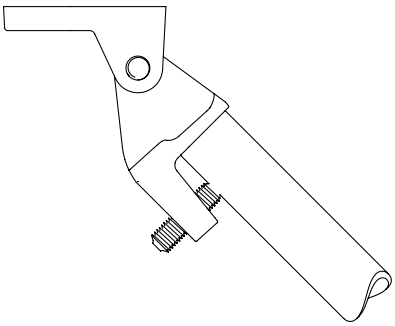

NFPA 13 Orientations A, B, or C

FIG. AF700 FM Approved (Listing) per FM 1950-13 (ASD)

Brace Member	Fastener Size	Horizontal Load Rating at Brace Angle			
		30°-44°	45°-59°	60°-74°	74°-90°
1" – 2" Sch 40 Pipe (DN25 – DN50)	½"- ¾" (M12-M18)	1780 lbf (7.92 kN)	2510 lbf (11.17 kN)	3080 lbf (13.70 kN)	3440 lbf (15.30 kN)

1) Load ratings may apply to NPFA 13 fastener orientations A, B, C, D, E, F, G, H, or I.
2) Brace Angles are determined from Vertical.
3) Listed load ratings reduced for angle ranges in accordance with NFPA 13–2019 Table 18.5.2.3.
4) See table below for listed brace members.
5) Minimum safety factor of 1.5 in accordance with NFPA 13–2016 Section A.9.3.5.2.3. To convert the load ratings above to a safety factor of 2.2 per NFPA 13–2019 Section A.18.5.2.3, multiply load ratings by a factor of 0.68.
6) To convert to LRFD Load Ratings, ASD Load Ratings may be multiplied by a factor of 1.5.

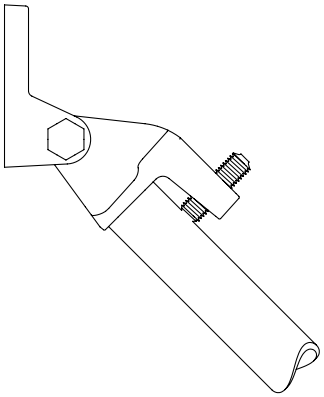

NFPA 13 Orientations D, E, or F

FIG. AF700 FM Listed, Approved & Tested Brace Members

Brace Member	Brace Size	Standard (or Equivalent)	UL	FM
Sch. 40 NPS Pipe	1", 1¼", 1½", 2"	ASTM A53, A106,A135, or A795	✓	✓
Sch. 40 Metric Pipe	DN25	KS S 3562	✓	✓
	DN32	EN10255H		✓
Metric Pipe	DN40	GB/T 3091		✓
	DN50	JIS G3454		✓

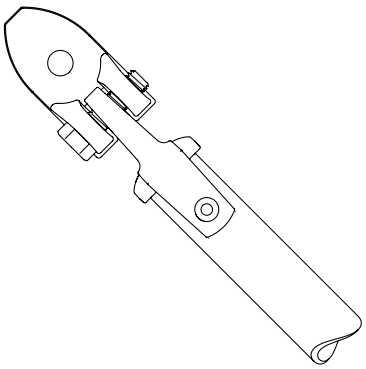

NFPA 13 Orientations G, H, or I

FIG AF700 Horizontal Prying Factors (Pr) Per NFPA 13: Angles (Deg)

Fastener Orientation	A	B	C	D	E	F	G	H	I
Brace Angle	30°-44°	45°-59°	60°-90°	30°-44°	45°-59°	60°-90°	30°-44°	45°-59°	60°-90°
AF700	2.55	1.09	0.91	1.41	1.45	2.00	1.83	1.29	1.06
AF700 w/ Metal Deck[1]	2.55	1.09	1.14	–	–	–	–	–	–
AF700 w/ Metal Deck[2]	2.75	1.11	1.14	–	–	–	–	–	–

1) Prying factors reflect the baseplate "B" dimension overhanging the edge of the metal deck. Used for DeWalt anchor loads.
2) Prying factors reflect the baseplate "A" or "B" dimension overhanging the edge of the metal deck. Used for NFPA & Hilti anchor loads.
3) Prying Factors calculated in accordance with NFPA 13–2019 Section A.18.5.12.2.

asc-es.com

Building connections that last™

ASC Engineered Solutions

Universal Swivel Attachment
Fig. AF700

Method 1 – Connection to Brace Member First

1. Slide the brace member over the lower jaw until it contacts the back wall.
2. Hand tighten the set screw until it contacts the brace member. Continue to torque the set screw until the head breaks off.
3. Rotate the brace assembly up to the fastener or the related seismic structural attachment and connect through the mounting hole.
4. Tighten per the fastener or structural attachment specifications.
5. Ensure the brace angle is within the range specified.

Notes: The cross bolt should be hand tight. For visual inspection, at least one thread should be exposed.

Method 2 – Connection to Structure First

1. Connect the AF700 to the fastener or the related seismic structural attachment.
2. Tighten per the fastener or structural attachment specifications.
3. Slide the brace member over the lower jaw until it contacts the back wall.
4. Hand tighten the set screw until it contacts the brace member. Continue to torque the set screw until the head breaks off.
5. Rotate the brace member until the brace angle is within the specified range.

Notes: The cross bolt should be hand tight. For visual inspection, at least one thread should be exposed..

Structural Attachments, Anchors, & Fasteners Listed, Approved, & Tested with the AF700

Structural Attachment	Structure
AF085	Steel Joist (Top Chord)
AF086	Horizontal Steel Flange (I-Beam Bottom Flange)
AF772	Horizontal Steel Flange (I-Beam Bottom Flange)
AF778	Horizontal Steel Flange (I-Beam Top or Bottom Flange) C-Channel (Top or Bottom Flange) Vertical Flange of a Joist (Top Chord)
AF779	All Structures with the Applicable Approved Anchor or Fastener
DeWalt Power-Stud®+ SD1	Cracked Concrete Cracked Concrete Filled Metal Deck
DeWalt Power-Stud®+ SD2	Cracked Concrete Cracked Concrete Filled Metal Deck
DeWalt Wood-Knocker®II+	Cracked Concrete
DeWalt Bang-It®+	Cracked Concrete Filled Metal Deck
DeWalt DDI+™	Cracked Concrete Filled Metal Deck
Anchors & Fasteners Per NFPA 13	Cracked Concrete Cracked Concrete Filled Metal Deck Steel Wood Saw Lumber or Glue-Laminated Timbers

asc-es.com

Building connections that last™

ASC Engineered Solutions

Longitudinal & Lateral Seismic Clamp
Fig. AF730

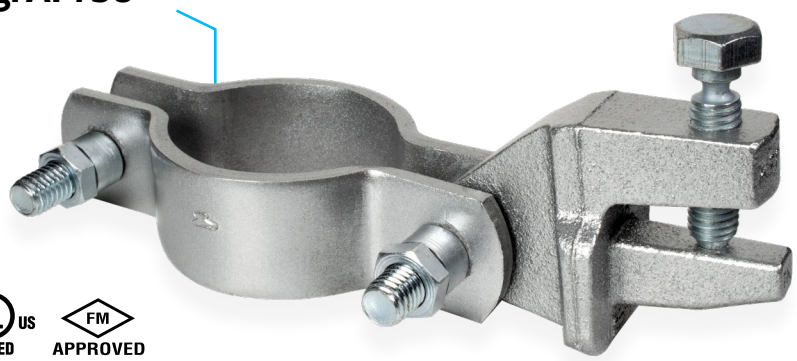

c UL us LISTED FM APPROVED

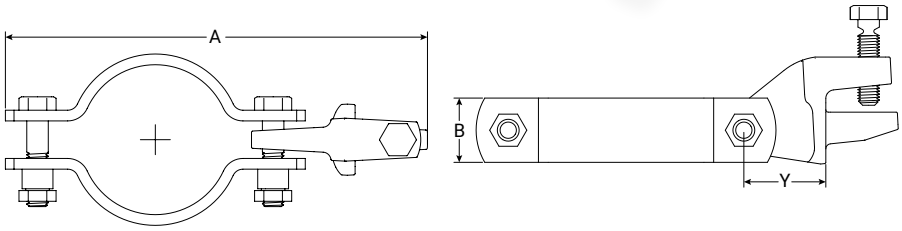

FIG. AF730 Dimensions and Weight

Size	A In./mm	B In./mm	Y In./mm	Weight lbs/kgs
1" (DN25)	7.6 193	1.50 38.1	1.91 48.5	2.49 1.13
1½" (DN32)	8.0 203			2.55 1.13
1½" (DN40)	8.2 208			2.64 1.20
2" (DN50)	8.7 221			2.78 1.26
2½"	9.2 234			2.92 1.32
3" (DN80)	9.8 249			3.13 1.42
4" (DN100)	10.8 274			3.38 1.53
5"	12.1 307			3.81 1.73
6"	13.2 335			4.12 1.87
8"	15.2 386			6.40 2.90
10"	18.1 460			7.60 3.45
12"	20.1 511			8.60 3.90

Notes:
ASC Engineered Solutions™ brand bracing components are designed to be compatible ONLY with other ASC Engineered Solutions brand bracing components, resulting in a Listed seismic bracing assembly. Updated UL listing information may be viewed at www.ul.com and updated FM approval information may be viewed at www.approvalguide.com.

Material Specifications

Size Range
Service Pipe Size: 1" – 12", DN25–DN100

Material
Carbon Steel Clamp and Hardware. Ductile Iron Brace Member Attachment Fitting.

Finish
- ☐ Plain
- ☐ Clamp: Hot Dipped Galvanized per ASTM A153
- ☐ Brace Member Attachment Fitting: Electro-Galvanized per ASTM B633

Service
A seismic longitudinal and lateral brace clamp designed to connect a piping system to a brace member. The AF730 rigidly braces piping systems subjected to horizontal and vertical seismic loads.

Approvals
cULus Listed (ANSI/UL 203a) and FM Approved (FM 1950–13). FM Tested (ANSI/FM 1950–16). Complies with NFPA 13, ASCE 7, IBC, & MSS SP–127 bracing requirements.

Features
- Torque off set screw and nuts provide a visual indication that the desired installation torque values have been achieved.

Ordering
Specify figure number, service pipe size, finish, and description.

Disclaimer:
ASC Engineered Solutions does not provide any warranties and specifically disclaims any liability whatsoever with respect to ASC bracing products and components that are used in combination with products, parts or systems not manufactured or sold by ASC. In no event shall ASC be liable for any incidental, direct, consequential, special or indirect damages or lost profits where non-ASC bracing components have been, or are used.

Seis Brace® Seismic Fire Protection Design Tool may be accessed at www.seisbrace.com

AFCON
An ASC Engineered Solution

PROJECT INFORMATION	APPROVAL STAMP
Project:	☐ Approved
Address:	☐ Approved as noted
Contractor:	☐ Not approved
Engineer:	Remarks:
Submittal Date:	
Notes 1:	
Notes 2:	

ASC Engineered Solutions

Longitudinal & Lateral Seismic Clamp
Fig. AF730

FIG. AF730 cULus Listing per ANSI/UL 203a (ASD)

Service Pipe Size	Standard Service Pipe	Specialty Service Pipe	Horizontal Load Rating at Brace Angle							
			Longitudinal Load Rating				Lateral Load Rating			
			30°-44°	45°-59°	60°-90°	Listed	30°-44°	45°-59°	60°-90°	Listed
			lbf/kN	lbf/kN	lbf/kN	lbf/kN	lbf/kN	lbf/kN	lbf/kN	lbf/kN
1" (DN25)	Sch. 10 Sch. 40 Metric Pipe	Mega-Thread MLT / GL Eddy Thread EZ-Thread	340 1.51	480 2.14	588 2.62	680 3.02	340 1.51	480 2.14	588 2.62	680 3.02
1¼" (DN32)	Sch. 10 Sch. 40 Metric Pipe	Mega-Flow MLT / GL Mega-Thread Eddy Flow Eddy Thread EZ-Thread								
1½" (DN40)	Sch. 10 Sch. 40 Metric Pipe	Mega-Flow MLT / GL Mega-Thread Eddy Flow Eddy Thread Fire-Flo EZ-Thread	375 1.67	530 2.36	649 2.89	750 3.34	375 1.67	530 2.36	649 2.89	750 3.34
2" (DN50)	Sch. 10 Sch. 40 Metric Pipe	Mega-Flow MLT / GL Mega-Thread Eddy Flow Eddy Thread Fire-Flo EZ-Thread								
2½"	Sch. 10 Sch. 40	Mega-Flow Eddy Flow Fire-Flo	545 2.42	770 3.43	943 4.19	1090 4.85	545 2.42	770 3.43	943 4.19	1090 4.85
3" (DN80)	Sch. 10 Sch. 40 Metric Pipe	Mega-Flow Eddy Flow Fire-Flo								
4" (DN100)	Sch. 10 Sch. 40 Metric Pipe	Mega-Flow Eddy Flow Fire-Flo								
5"	Sch. 10 Sch. 40	–								
6"	Sch. 10 Sch. 40	Mega-Flow	942 4.19	1333 5.93	1632 7.26	1885 8.38	942 4.19	1333 5.93	1632 7.26	1885 8.38
8"	Sch. 10 0.188" Wall Sch. 40	–								
10"	0.188" Wall Sch. 40	–								

Brace Angles are determined from Vertical.
Sch. 10 & 0.188" Wall Load Ratings may be used for any thicker wall pipe of the same diameter.
Listed load ratings reduced for angle ranges in accordance with NFPA 13-2019 Table 18.5.2.3.
See table on page 4 for UL listed specialty pipes & UL Listed metric service pipes.
See table on page 4 for UL listed brace members.
Load ratings include a minimum safety factor of 2.2 in accordance with NFPA 13-2019 Section A.18.5.2.3.
All load ratings may be used for NFPA 13-2016 designs.

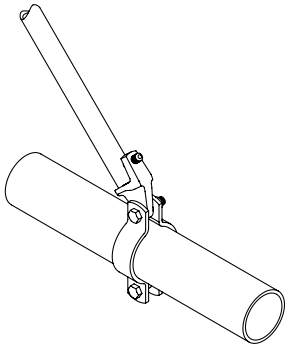

Longitudinal Application

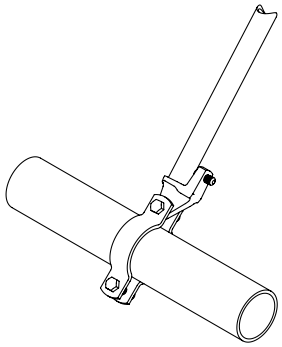

Lateral Application

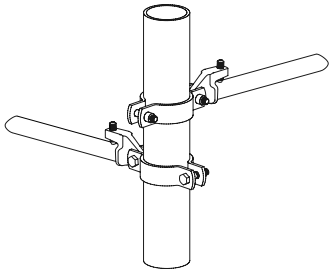

Riser Application

asc-es.com

Building connections that last™

ASC Engineered Solutions

Longitudinal & Lateral Seismic Clamp
Fig. AF730

FIG. AF730 FM Approved (Listing) per FM 1950-13 (ASD)

Service Pipe Size	Standard Service Pipe	Specialty Service Pipe	Horizontal Load Rating at Brace Angle							
			Longitudinal Load Rating				Lateral Load Rating			
			30˚-44˚	45˚-59˚	60˚-74˚	75˚-90˚	30˚-44˚	45˚-59˚	60˚-74˚	75˚-90˚
			lbf/kN	lbf/kN	lbf/kN	lbf/kN	lbf/kN	lbf/kN	lbf/kN	lbf/kN
1" (DN25)	Sch. 10 Sch. 40 Metric Pipe	Mega-Thread MLT / GL Eddy Thread EZ-Thread	550 2.24	640 2.84	670 2.98	740 3.29	1740 7.74	2460 10.94	3010 13.39	3360 14.95
1¼" (DN32)	Sch. 10 Sch. 40 Metric Pipe	Mega-Flow MLT / GL Mega-Thread Eddy Flow Eddy Thread EZ-Thread	740 3.29	680 3.02	820 3.65	1620 7.21	1430 6.36	2020 8.99	2480 11.03	2770 12.32
1½" (DN40)	Sch. 10 Sch. 40 Metric Pipe	Mega-Flow MLT / GL Mega-Thread Eddy Flow Eddy Thread Fire-Flo EZ-Thread	800 3.56	650 2.89	790 3.51	1800 8.01	1790 7.96	2530 11.25	3100 13.79	3460 15.39
2" (DN50)	Sch. 10 Sch. 40 Metric Pipe	Mega-Flow MLT / GL Mega-Thread Eddy Flow Eddy Thread Fire-Flo EZ-Thread	830 3.69	990 4.4	1190 5.29	1620 7.21	1820 8.1	2580 11.48	3160 14.06	3530 15.7
2½"	Sch. 10 Sch. 40	Mega-Flow Eddy Flow Fire-Flo	800 3.65	700 3.11	850 3.78	1930 8.59	1610 7.16	2280 10.14	2790 12.41	3120 13.88
3" (DN80)	Sch. 10 Sch. 40 Metric Pipe	Mega-Flow Eddy Flow Fire-Flo	960 4.27	1330 5.92	1540 6.85	1700 7.56	1550 6.89	2200 9.79	2690 11.97	3010 13.39
4" (DN100)	Sch. 10 Sch. 40 Metric Pipe	Mega-Flow Eddy Flow Fire-Flo	760 3.38	1040 4.63	1270 5.65	1400 6.23	1260 5.6	1790 7.96	2190 9.74	2440 10.85
5"	Sch. 10 Sch. 40	–	890 3.96	1230 5.47	1410 6.27	1550 6.89	1260 5.6	1790 7.96	2190 9.74	2440 10.85
6"	Sch. 10 Sch. 40	Mega-Flow	700 3.11	940 4.18	1140 5.07	1310 5.83	950 4.23	1340 5.96	1640 7.3	1830 8.14
8"	0.188" Wall Sch. 40	–	990 4.4	1130 5.03	1360 6.05	1520 6.76	1540 6.85	2170 9.65	2660 11.82	2970 13.21
10"	0.188" Wall Sch. 40	–	1020 4.54	850 3.78	1000 4.45	1100 4.89	1700 7.56	2410 10.72	2950 13.12	3290 14.63
12"	0.188" Wall Sch. 40	–	970 4.31	1010 4.49	1220 5.43	1430 6.36	1690 7.52	2390 10.63	2930 13.03	3270 14.55

Brace Angles are determined from Vertical.

Sch. 10 & 0.188" Wall Load Ratings may be used for any thicker wall pipe of the same diameter.

Load ratings include a minimum safety factor of 1.5 in accordance with NFPA 13-2016 Section A.9.3.5.2.3. To convert the load ratings above to a safety factor of 2.2 per NFPA 13-2019 Section A.18.5.2.3, multiply load ratings by a factor of 0.68.

To convert to LRFD Load Ratings, ASD Load Ratings may be multiplied by a factor of 1.5.

See table on page 4 for FM approved metric service pipes.

See table on page 4 for FM approved brace members.

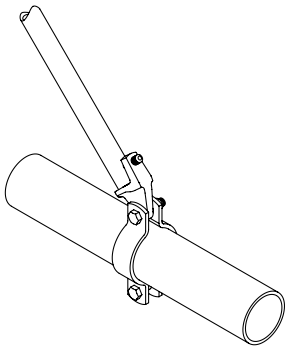

Longitudinal Application

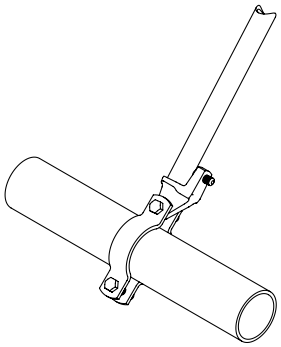

Lateral Application

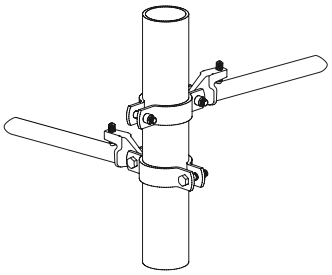

Riser Application

asc-es.com

Building connections that last™

Longitudinal & Lateral Seismic Clamp
Fig. AF730

Method 1 – Connection to Brace Member First

1. Slide the brace member over the lower jaw until it contacts the back wall of the brace member attachment fitting.
2. Hand tighten the set screw until it contacts the brace member. Continue to torque the set screw until the head breaks off.
3. Rotate the brace assembly to the service pipe. Unbolt the back nut & bolt and rotate the clamp halves over the service pipe. Re-assemble the nut and bolt.
4. Hand tighten the nuts on both sides of the clamp. Evenly and alternately torque the nut until the head breaks off. It is best practice to tighten the nut at the jaw side first.
5. Ensure the brace angle is within the range specified.

Method 2 – Connection to Service Pipe First

1. Unbolt the back nut & bolt and rotate the clamp halves over the service pipe. Re-assemble the nut and bolt.
2. Hand tighten the nuts on both sides of the clamp. Evenly and alternately torque the nut until the head breaks off. It is best practice to tighten the nut at the jaw side first.
3. Slide the brace member over the lower jaw until it contacts the back wall of the brace member attachment fitting.
4. Hand tighten the set screw until it contacts the brace member. Continue to torque the set screw until the head breaks off.

FIG. AF730 cULus Listed & FM Approved Brace Members

Brace Member	Sizes	Standards (or Equivalent)	UL Listed	FM Approved
Sch. 40 NPS Pipe	1", 1¼", 1½", 2"	ASTM A53, A106, A135, or A795	✓	✓
Sch. 40 Metric Pipe	DN25, DN32, DN40, DN50	KS D 3562	✓	✓
Metric Pipe		EN10255H		✓
		GB/T 3091		✓
		JIS G3454		✓

FIG. AF730 cULus Listed & FM Approved Metric Service Pipes

Brace Member	Service Pipe Sizes	UL Listed	FM Approved
KS D 3507 KS D 3537	DN25, DN32, DN40, DN50, DN 80, DN100	✓	✓
KS D 3562 Sch. 40		✓	✓
GB/T 3091 GB/T 3092			✓
JIS G3452			✓
EN 10255M			
EN 10255H			

asc-es.com

Building connections that last™

2707 70TH Avenue East
Tacoma, WA 98424

TEL: (253) 926.2290
FAX: (253) 922.6150

SECTION 4.0

VALVES

Model REL-BL Full Port Ball Valves

Product Description

Reliable Model REL-BL full port ball valves are cULus Listed and FM Approved as trim and drain valves for fire protection systems. Table A indicates the rated working pressures. The valves feature a forged brass valve body with FNPT end connections.

Installation

The Reliable Full Port Ball Valve shall be installed in accordance with NFPA 13, "Standard for the Installation of Sprinkler Systems," as well as the requirements of any authorities having jurisdiction. Verify compatibility of the Full Port Ball Valve materials with the water supply and the environment where the valve will be installed prior to installation.

WARNING: Model REL-BL ball valves contain lead and are not for use in systems carrying water intended for human consumption.

Maintenance

The owner is responsible for maintaining the fire protection system in proper operating condition. Any system maintenance or testing that involves placing a control valve out of service will eliminate the fire protection that is provided by the fire protection system.

The Reliable Full Port Ball Valve shall periodically be given a thorough inspection and test. NFPA 25, "Inspection, Testing and Maintenance of Water Based Fire Protection Systems," provides minimum maintenance requirements. Inspect the valve for corrosion, damage, and wear as required and replace as necessary. Increase the frequency of inspections when the valve is exposed to corrosive conditions or chemicals that could impact the valve materials.

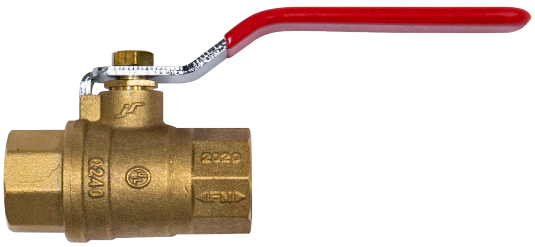

Model REL-BL Full Port Ball

Guarantee

For Reliable Automatic Sprinkler Co., Inc. guarantee, terms, and conditions, visit www.reliablesprinkler.com.

Ordering Information

Specify the following when ordering:

Reliable Model REL-BL Full Port Ball Valve
Valve Size

- 1/4" (8 mm)
- 1/2" (15 mm)
- 3/4" (20 mm)
- 1" (25 mm)
- 1-1/4" (32 mm)
- 1-1/2" (40 mm)
- 2" (50 mm)

Table A

Valve Size	Pressure Rating	Approvals
1/4" (8 mm)	600 psi (41.4 bar)	cULus Listed
1/2" (15 mm)	600 psi (41.4 bar)	cULus Listed
	300 psi (20.7 bar)	FM Approved
3/4" (20 mm)	600 psi (41.4 bar)	cULus Listed
	300 psi (20.7 bar)	FM Approved
1" (25 mm)	600 psi (41.4 bar)	cULus Listed
	300 psi (20.7 bar)	FM Approved
1-1/4" (32 mm)	600 psi (41.4 bar)	cULus Listed
	300 psi (20.7 bar)	FM Approved
1-1/2" (40 mm)	600 psi (41.4 bar)	cULUs Listed
	300 psi (20.7 bar)	FM Approved
2" (50 mm)	300 psi (20.7 bar)	cULus Listed, FM Approved

Model REL-BL Full Port Ball Valves

Technical Specifications
Pressure Rating:
See Table A

Material Specifications
Body: C37700 Brass Alloy
Bonnet: C37700 Brass Alloy
Seat: PTFE
Ball: C37700 Brass Alloy
Stem: HPb59-1 Brass Alloy
Packing: PTFE
Gland: C37700 Brass Alloy
Handle: Q235A Steel Alloy
Nut: Q235A Steel Alloy

End Connections
Female NPT

Listings and Approvals
cULus Listed (1/4” - 2”)
FM Approved (1/2” - 2”)

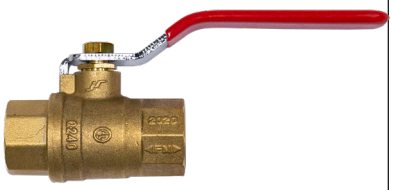

Model REL-BL Full Port Ball Valve Dimensions

Figure 1

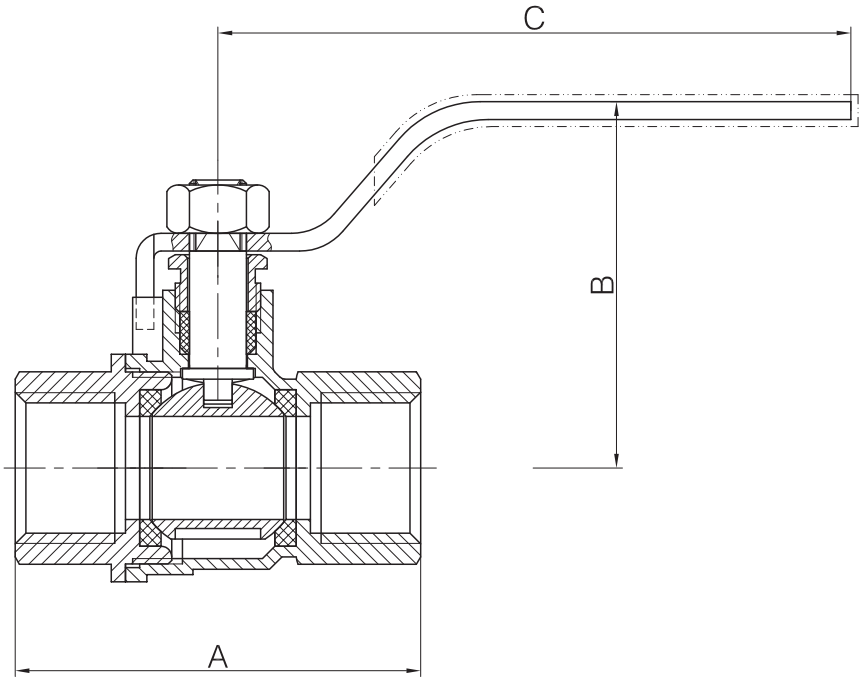

Dimensions in. (mm)

Table B

Valve Size	A	B	C
1/4” (8 mm)	1-3/4” (44)	1-13/16” (46)	3-1/2” (89)
1/2” (15 mm)	2-1/4” (57)	2” (51.5)	3-1/2” (89)
3/4” (20 mm)	2-1/2” (63)	2-3/8” (61)	4-1/8” (104)
1” (25 mm)	3” (75.5)	2-1/2” (63.5)	4-5/8” (117.5)
1-1/4” (32 mm)	3-7/16” (86.5)	2-13/16” (71)	4-5/8” (117.5)
1-1/2” (40 mm)	3-11/16” (94.2)	3-3/4” (94.5)	5-11/16” (145)
2” (50 mm)	4-1/4” (108)	4” (102)	5-11/16” (145)

P/N 999970612

DRUM DRIP ASSEMBLY
Threaded Connections

ARGCO DRUM DRIP
(auxiliary drains, low-point drains, condensation collection assemblies)
meet and exceed NFPA 13 and NFPA 25 requirements addressing drainage in dry and pre-action sprinkler systems.

Comes fully assembled with UL Listed 1” brass quarter-turn full port 600 psi valves with chrome plated brass balls.
They are easily retro-fitted into existing systems or installed into new systems.
Wrapped in a bright red, vinyl label that increases visibility, provides a consistant appearance, and includes the required NFPA signage with operating instructions that adhere to NFPA guidelines.

Features:
- High Visibility
- Consistent Appearance
- Fully Assembled
- Galvanized or Black Steel Pipe
- High-Quality, Brass, Quarter Turn Ball Valves
- Easy Installation
- Easy Operation
- NFPA Signage

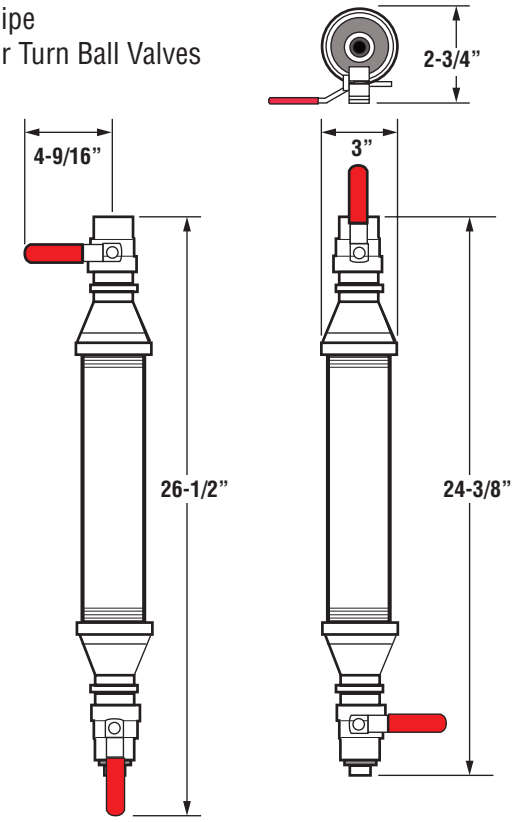

DRAINING **COLLECTING**

Item Number: 6520380T
Drum Drip with Threaded Connections - Galvanized Pipe

Item Number: 6520381T
Drum Drip with Threaded Connections - Black Pipe

System No.		Location		Spec Section		Paragraph	
Submitted By		Date		Approved		Date	

2707 70TH Avenue East
Tacoma, WA 98424

TEL: (253) 926.2290
FAX: (253) 922.6150

SECTION 5.0

PIPES
&
FITTINGS

State Pipe & Supply, Inc.

THIS INFORMATION PROVIDED IS BASED ON ASTM GUIDELINES FOR WELDED PIPE SPECIFICATIONS AND ASTM REQUIREMENTS. ACTUAL PIPE AND MATERIAL TEST REPORTS PROVIDED WOULD MEET OR EXCEED THESE GUIDELINES.

TEST REPORTS WOULD PROVIDE SPECIFIC AND ACTUAL DETAILS CONCERNING THE MECHANICAL AND CHEMICAL PROPERTIES OF THE ACTUAL PIPE, AS WELL AS ADDITIONAL TESTS RESULTS REQUIRED BY ASTM.

SCHEDULE 10 ** Black and Galvanized Steel ERW Pipe

Pipe Size Nominal	O.D.	I.D.	Weight / Foot	Test Pressure psi
1"	1.315	1.097	1.410	700
1-1/4"	1.660	1.442	1.810	1200
1-1/2"	1.900	1.682	2.090	1200
2"	2.375	2.157	2.640	2300
2-1/2"	2.875	2.635	3.530	2500
3"	3.500	3.260	4.340	1290
4"	4.500	4.260	5.620	1000
5"	5.563	5.295	7.780	1010
6"	6.625	6.357	9.300	1020
8" **	8.625	8.249	16.960	780

** 8" wall thickness is 0.188, not SCH10 or 0.148" wall thickness.

COMPOSITION AND PROPERTIES

Chemical and mechanical properties requirements are as prescribed by applicable ASTM standards edition January 2006.

Chemical Requirements, Percent (Product)

		C	Mn	P	S	Other
Specification	Grade	max	max	max	max	
ASTM A53	A	0.250	0.950	0.05	0.045	-

1 Residual elements max: Cu-0.40, Ni-0.40, Cr-0.40, Mo-0.15 and V-.08. These live elements combined shall not exceed 1%.

Mechanical Properties-Tensile Requirements

		Strength-psi.			
		Yield		Tensile	
Specification	Grade	Min	Max	Min	Max
ASTM A53	A	30,000	-	48,000	-

NOTE: Elongation requirements vary with nominal area of test specimen and specified minimum tensile strength of the steel grade.

9615 S. Norwalk Blvd., Santa Fe Springs, CA 90670 • (562) 695-5555 • FAX: (562) 692-1054 • www.statepipe.com

State Pipe & Supply, Inc.

THIS INFORMATION PROVIDED IS BASED ON ASTM GUIDELINES FOR WELDED PIPE SPECIFICATIONS AND ASTM REQUIREMENTS. ACTUAL PIPE AND MATERIAL TEST REPORTS PROVIDED WOULD MEET OR EXCEED THESE GUIDELINES.

TEST REPORTS WOULD PROVIDE SPECIFIC AND ACTUAL DETAILS CONCERNING THE MECHANICAL AND CHEMICAL PROPERTIES OF THE ACTUAL PIPE, AS WELL AS ADDITIONAL TESTS RESULTS REQUIRED BY ASTM.

SCHEDULE 40 Black and Galvanized Steel ERW Pipe

Pipe Size Nominal	O.D.	I.D.	Weight / Foot	Test Pressure psi
1"	1.315	1.049	1.680	700
1-1/4"	1.660	1.380	2.270	1200
1-1/2"	1.900	1.610	2.720	1200
2"	2.375	2.067	3.660	2300
2-1/2"	2.875	2.469	5.800	2500
3"	3.500	3.068	7.580	2220
4"	4.500	4.026	10.800	1900
5"	5.563	5.047	14.630	1670
6"	6.625	6.065	18.990	1520
8"	8.625	7.981	28.580	1340

COMPOSITION AND PROPERTIES

Chemical and mechanical properties requirements are as prescribed by applicable ASTM standards edition January 2006.

Chemical Requirements, Percent (Product)

		C	Mn	P	S	Other
Specification	Grade	max	max	max	max	
ASTM A53	A	0.250	0.950	0.05	0.045	-

1 Residual elements max: Cu-0.40, Ni-0.40, Cr-0.40, Mo-0.15 and V-.08. These live elements combined shall not exceed 1%.

Mechanical Properties-Tensile Requirements

		Strength-psi.			
		Yield		Tensile	
Specification	Grade	Min	Max	Min	Max
ASTM A53	A	30,000	-	48,000	-

NOTE: Elongation requirements vary with nominal area of test specimen and specified minimum tensile strength of the steel grade.

9615 S. Norwalk Blvd., Santa Fe Springs, CA 90670 • (562) 695-5555 • FAX: (562) 692-1054 • www.statepipe.com

Victaulic® FireLock™ Fittings

1.0 PRODUCT DESCRIPTION

Available Sizes

- 1 ¼ – 8"/DN32 – DN200

Maximum Working Pressure

- Pressure ratings for Victaulic FireLock™ Fittings conform to the ratings of Victaulic FireLock EZ™ Style 009N couplings (refer to publication 10.64 for more information).

Application

- FireLock™ fittings are designed for use exclusively with Victaulic couplings that have been Listed or Approved for Fire Protection Services. Use of other couplings or flange adapters may result in bolt pad interference.
- Connects pipe, provides change in direction and adapts sizes or components

Pipe Materials

- Carbon steel

2.0 CERTIFICATION/LISTINGS

EN 10311
CPR (EU)
No. 305/2011

BS EN 10311
CPR (UK)
2019 No. 465

3.0 SPECIFICATIONS – MATERIAL

Fitting: Ductile iron conforming to ASTM A536, Grade 65-45-12.

Fitting Coating: (specify choice)

- ☐ Orange coating.
- ☐ Red coating (standard for EMEA-I and Asia Pacific).
- ☐ Optional: Hot dipped galvanized.

ALWAYS REFER TO ANY NOTIFICATIONS AT THE END OF THIS DOCUMENT REGARDING PRODUCT INSTALLATION, MAINTENANCE OR SUPPORT.

4.0 DIMENSIONS

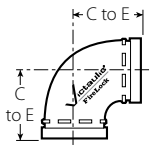

No. 001

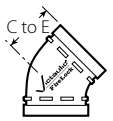

No. 003

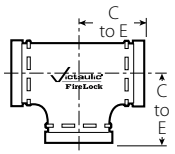

No. 002

No. 006

Nominal Size inches DN	Actual Outside Diameter inches mm	No. 001 90° Elbow C to E inches mm	No. 001 90° Elbow Approximate Weight Each lb kg	No. 003 45° Elbow C to E inches mm	No. 003 45° Elbow Approximate Weight Each lb kg	No. 002 Straight Tee C to E inches mm	No. 002 Straight Tee Approximate Weight Each lb kg	No. 006 Cap T inches mm	No. 006 Cap Approximate Weight Each lb kg
1 ¼ DN32	1.660 42.4	–	–	–	–	–	–	0.82 21	0.3 0.1
1 ½ DN40	1.900 48.3	–	–	–	–	–	–	0.82 21	0.4 0.2
2 DN50	2.375 60.3	2.75 70	1.6 0.7	2.00 51	1.4 0.6	2.75 70	2.4 1.1	0.88 22	0.6 0.3
2 ½	2.875 73.0	3.00 76	2.1 1.0	2.25 57	2.2 1.0	3.00 76	3.4 1.5	0.88 22	1.0 0.5
DN65	3.000 76.1	3.00 76	2.5 1.1	2.25 57	2.4 1.1	3.00 76	3.8 1.7	–	–
3 DN80	3.500 88.9	3.38 86	3.4 1.5	2.50 64	3.1 1.4	3.38 86	5.1 2.3	0.88 22	1.2 0.5
	4.250 108.0	4.00 102	5.7 2.6	3.00 76	5.1 2.3	4.00 102	7.5 3.4	–	–
4 DN100	4.500 114.3	4.00 102	5.9 2.7	3.00 76	4.9 2.2	4.00 102	6.8 3.1	1.00 25	2.4 1.1
DN125	5.500 139.7	4.88 124	12.4 5.6	3.25 82.6	8.2 3.7	4.88 124	15.4 7.0	–	–
5	5.563 141.3	4.88 124	7.8 3.5	3.25 83	8.3 3.8	4.88 124	15.3 6.9	1.00 25	4.1 1.9
	6.250 158.8	5.50 140	12.6 5.7	3.50 89	9.2 4.2	5.50 140	17.9 8.1	–	–
	6.500 165.1	5.43 140	13.0 5.9	3.50 89	9.4 4.2	5.50 140	19.7 8.9	–	–
6 DN150	6.625 168.3	5.50 140	13.7 6.2	3.50 89	10.4 4.7	5.50 140	20.2 9.2	1.00 25	5.9 2.7
	8.515 216.3	6.81 173	23.1 10.5	–	–	6.94 176	33.6 15.0	–	–
8 DN200	8.625 219.1	6.81 173	27.1 12.5	4.25 108	19.3 8.7	6.94 176	39.0 17.5	1.13 29	12.7 5.8

5.0 PERFORMANCE

Flow Data

Size		Frictional Resistance Equivalent of Straight Pipe[1]			
		Elbows		No. 002 Straight Tee	
Nominal Size inches DN	Actual Outside Diameter inches mm	No. 001 90° Elbow feet meters	No. 003 45° Elbow feet meters	Branch feet meters	Run feet meters
1 ¼ DN32	1.660 42.4	–	–	–	–
1 ½ DN40	1.900 48.3	–	–	–	–
2 DN50	2.375 60.3	3.5 1.1	1.8 0.5	8.5 2.6	3.5 1.1
2 ½	2.875 73.0	4.3 1.3	2.2 0.7	10.8 3.3	4.3 1.3
DN65	3.000 76.1	4.5 1.4	2.3 0.7	11.0 3.4	4.5 1.4
3 DN80	3.500 88.9	5.0 1.5	2.6 0.8	13.0 4.0	5.0 1.5
	4.250 108.0	6.4 2.0	3.2 0.9	15.3 4.7	6.4 2.0
4 DN100	4.500 114.3	6.8 2.1	3.4 1.0	16.0 4.9	6.8 2.1
5	5.563 141.3	8.5 2.6	4.2 1.3	21.0 6.4	8.5 2.6
DN125	5.500 139.7	8.3 2.5	4.1 1.3	20.6 6.3	8.3 2.5
	6.250 158.8	9.4 2.9	4.9 1.5	25.0 7.6	9.6 2.9
6 DN150	6.625 168.3	10.0 3.0	5.0 1.5	25.0 7.6	10.0 3.0
	6.500 165.1	9.8 3.0	4.9 1.5	24.5 7.5	9.8 3.0
8 DN200	8.625 219.1	13.0 4.0	5.0 1.5	33.0 10.1	13.0 4.0
	8.515 216.3	13.0 4.0	–	33.0 10.1	13.0 4.0

[1] The flow data listed is based upon the pressure drop of Schedule 40 pipe.

6.0 NOTIFICATIONS

General Notes

NOTE: When assembling FireLock EZ™ couplings onto end caps, take additional care to make certain the end cap is fully seated against the gasket end stop. For FireLock EZ™ Style 009N/009H couplings, use FireLock™ No. 006 end caps containing the "EZ" marking on the inside face or No. 60 end caps containing the "QV EZ" marking on the inside face. Non-Victaulic end cap products shall not be used with Style 009/009V/009H/009N couplings.

7.0 REFERENCE MATERIALS

10.64: Victaulic® FireLock™ Rigid Coupling Style 009N

10.02: Victaulic® FireLock™ Rigid Coupling Style 005H with Vic-Plus™ Gasket System

29.01: Victaulic® Terms and Conditions of Sale

Victaulic® Grooved End Fittings

No. 20 Tee

No. 10 Elbow

1.0 PRODUCT DESCRIPTION

Available Sizes

- ¾ – 24"/DN20 – DN600

Pipe Material

- Carbon steel

Maximum Working Pressure

- Pressure ratings for Victaulic standard fittings conform to the ratings of Victaulic Style 77 couplings (refer to publication 06.04 for more information).

Application

- Connects pipe, provides change in direction and adapts sizes or components
- Supplied with Victaulic Original Groove System (OGS) grooves
- Exclusively for use with Victaulic couplings, valves, accessories and pipe which feature ends formed with the Victaulic OGS groove profile

NOTES

- For 14"/DN350 and larger roll grooved systems for carbon steel pipe, Victaulic offers fittings for the Advanced Groove System (AGS). Refer to publication 20.05 for more information.
- These fittings are not intended for use with Victaulic plain end couplings. Intended for use only in grooved piping systems. When connecting wafer or lug type butterfly valves directly to Victaulic fittings using Style 741 or Style 743 flange adapters, be sure to check disc clearance dimensions with I.D. dimension of fitting.

ALWAYS REFER TO ANY NOTIFICATIONS AT THE END OF THIS DOCUMENT REGARDING PRODUCT INSTALLATION, MAINTENANCE OR SUPPORT.

2.0 CERTIFICATION/LISTINGS

EN 10311
CPR (EU)
No. 305/2011

BS EN 10311
CPR (UK)
2019 No. 465

NOTES

- When supplied as "hot dip galvanized" the following fittings are UL Classified in accordance with ANSI/NSF 61 and for use on cold +86°F/+30°C potable water service and ANSI/NSF 372: No. 10 90° Elbow, No. 11 45° Elbow, No. 12 22 ½° Elbow, No. 13 11 ¼° Elbow, No. 100 90° Long Radius Elbow, No. 110 45° Long Radius Elbow, No. 20 Tee, No. 25 Tee with Grooved Branch, No. 30 45° Lateral, No. 60 Cap, No. 50 Concentric Reducers, No. 51 Eccentric Reducers.
- The following Victaulic fittings are VdS approved: No.10 90° Elbow, No.11 45° Elbow, No.20 Tee and No.60 Cap.
- The following Victaulic fittings are LPCB approved: No.10 90° Elbow, No.11 45° Elbow, No.12 22 ½ Elbow, No.13 11 ¼° Elbow, No.30 45° Lateral, No.30-R Reducing Lateral, No.100 Long Radius Elbow, No.110 Long Radius Elbow, No.20 Tee, No.35 Cross, No.60 Cap, No.25 Reducing Tee, No.33 True Wye, No.50 Concentric Reducer, No.51 Eccentric Reducer and No.29M Tee with Threaded Branch.
- The following Victaulic fittings are FM approved: No.10 90° Elbow, No.11 45° Elbow, No.12 22 ½ Elbow, No.13 11 ¼° Elbow, No.30 45° Lateral, No.100 Long Radius Elbow, No.20 Tee, No.35 Cross, No.60 Cap, No.25 Reducing Tee and No.50 Concentric Reducer.
- Download publication 10.01 for Fire Protection Certifications/Listings Reference Guide to view which sizes of the fittings listed above have active fire protection approvals.

3.0 SPECIFICATIONS – MATERIAL

Fitting: (specify choice)

- ☐ Standard: Ductile iron conforming to ASTM A536, Grade 65-45-12.
- ☐ Optional: Segmentally welded carbon steel, standard wall, conforming to ASTM A53, Type E or S, Gr. B

Nipples: (specify choice)

- ☐ ¾ – 6"/DN20 – DN150: Carbon steel, Schedule 40, conforming to ASTM A53, Type E or S, Gr. B
- ☐ 8 – 12"/DN200 – DN300: Carbon steel, standard wall, conforming to ASTM A53, Type E or S, Gr. B

Flanged Adapter Nipples: (specify choice)

- ☐ Class 125 Flange: Cast iron conforming to ANSI B16.1
- ☐ Class 150 Flange: Carbon steel conforming to ANSI B16.5, raised or flat face
- ☐ Class 300 Flange: Carbon steel conforming to ANSI B16.5, raised or flat face

Fitting Coating: (specify choice)

- ☐ Standard: Orange enamel
- ☐ Optional: Hot dip galvanized and others. Some fittings supplied electroplated as standard – see product specifications

Flanged Adapter Nipple Coating: (specify choice)

- ☐ Standard: None (Unfinished)
- ☐ Optional: Orange enamel, hot dip galvanized and others

4.0 DIMENSIONS

Elbows
No. 10 90° Elbow
No. 11 45° Elbow

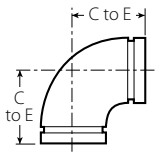

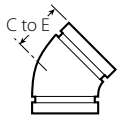

Size		No. 10 90° Elbow		No. 11 45° Elbow	
Nominal inches DN	Actual Outside Diameter inches mm	C to E inches mm	Approx. Weight (Each) lb kg	C to E inches mm	Approx. Weight (Each) lb kg
¾ DN20	1.050 26.9	2.25 57	0.5 0.2	1.50 38	0.5 0.2
1 DN25	1.315 33.7	2.25 57	0.6 0.2	1.75 44	0.5 0.2
1 ¼ DN32	1.660 42.4	2.75 70	0.8 0.4	1.75 44	0.6 0.3
1 ½ DN40	1.900 48.3	2.75 70	1.0 0.5	1.75 44	0.8 0.4
2 DN50	2.375 60.3	3.25 83	1.8 0.8	2.00 51	1.3 0.6
2 ½	2.875 73.0	3.75 95	3.0 1.3	2.25 57	2.1 1.0
DN65	3.000 76.1	3.75 95	3.1 1.4	2.25 57	2.3 1.0
3 DN80	3.500 88.9	4.25 108	4.5 2.0	2.50 64	3.0 1.3
3 ½ DN90	4.000 101.6	4.50 114	5.6 2.5	2.75 70	4.0 1.8
	4.250 108.0	5.00 127	6.2 2.8	3.00 76	4.6 2.1
4 DN100	4.500 114.3	5.00 127	6.8 3.1	3.00 76	5.2 2.4
4 ½	5.000 127.0	5.00 127	8.6 3.9	3.13 79	5.9 2.7
	5.250 133.0	5.50 140	10.3 4.7	3.25 83	6.6 3.0
DN125	5.500 139.7	5.50 140	9.9 4.5	3.25 83	7.2 3.2
5	5.563 141.3	5.50 140	10.1 4.6	3.25 83	7.4 3.4
	6.000 152.4	6.50 (sw) 165	13.3 6.0	3.50 (sw) 89	9.5 4.3
	6.250 159.0	6.50 165	13.0 5.9	3.25 83	9.5 4.3
	6.500 165.1	6.50 165	15.5 7.0	3.50 89	9.7 4.4
6 DN150	6.625 168.3	6.50 165	15.3 6.9	3.50 89	10.2 4.6
200A	216.3	7.75 197	34.7 15.7	4.25 108	14.4 6.5

[1] For 14"/DN350 and larger roll grooved systems for carbon steel pipe, Victaulic offers fittings for the Advanced Groove System (AGS). Refer to publication 20.05 for more information. For pricing and availability of cut groove fittings in this size, contact your nearest Victaulic sales representative.

(sw) = Carbon Steel Segmentally Welded

NOTE
- All fittings are ductile iron unless otherwise noted with an (sw).

4.0 DIMENSIONS (CONTINUED)

Elbows

No. 10 90° Elbow
No. 11 45° Elbow

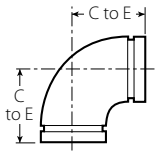

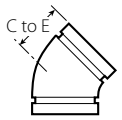

Size		No. 10 90° Elbow		No. 11 45° Elbow	
Nominal inches DN	Actual Outside Diameter inches mm	C to E inches mm	Approx. Weight (Each) lb kg	C to E inches mm	Approx. Weight (Each) lb kg
8 DN200	8.625 219.1	7.75 197	27.5 12.5	4.25 108	18.6 8.4
250A	267.4	9.00 229	67.8 30.7	4.75 121	28.1 12.7
10 DN250	10.750 273.0	9.00 229	50.0 22.7	4.75 121	37.5 17.0
300A	318.5	10.00 254	73.5 33.3	5.25 133	41.3 18.7
12 DN300	12.750 323.9	10.00 254	79.3 36.0	5.25 133	45.0 20.4
14[1] DN350	14.000 355.6	14.00 356	146.0 66.2	5.80 147	78.0 35.4
	14.843 377.0	14.88 378	168.0 76.2	6.15 156	82.0 37.2
16[1] DN400	16.000 406.4	16.00 406	190.0 86.2	6.63 168	88.2 40.0
	16.772 426.0	16.75 425	216.0 98.0	6.95 177	98.1 44.5
18[1] DN450	18.000 457.2	18.00 457	241.0 109.3	7.46 189	123.0 55.8
	18.898 480.0	18.90 480	291.0 132.0	7.83 199	123.2 55.9
20[1] DN500	20.000 508.0	20.00 508	296.0 134.3	8.28 210	151.0 68.5
	20.866 530.0	20.88 530	355.0 161.0	8.64 219	179.0 81.2
22 DN550	22.000 558.8	25.00 635	386.0 175.1	12.11 308	210.0 95.3
24[1] DN600	24.000 609.6	24.00 610	475.0 215.5	9.94 252	240.0 108.9
	24.803 630.0	24.75 629	545.0 247.2	10.27 261	275.4 124.9
14 – 60 DN350 – DN1500	For AGS fitting information, see publication 20.05 AGS™				

1 For 14"/DN350 and larger roll grooved systems for carbon steel pipe, Victaulic offers fittings for the Advanced Groove System (AGS). Refer to publication 20.05 for more information. For pricing and availability of cut groove fittings in this size, contact your nearest Victaulic sales representative.

(sw) = Carbon Steel Segmentally Welded

NOTE

- All fittings are ductile iron unless otherwise noted with an (sw).

4.0 DIMENSIONS (CONTINUED)

Elbows

No. 12 22 ½° Elbow
No. 13 11 ¼° Elbow

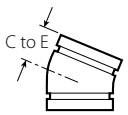

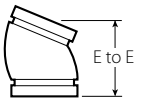

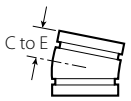

Size		No. 12 22 ½° Elbow		No. 12G (GSNK) 22 ½° Elbow		No. 13 11 ¼° Elbow	
Nominal inches DN	**Actual Outside Diameter** inches mm	**C to E** inches mm	**Approx. Weight (Each)** lb kg	**E to E** inches mm	**Approx. Weight (Each)** lb kg	**C to E** inches mm	**Approx. Weight (Each)** lb kg
¾ DN20	1.050 26.9	1.63 (sw) 41	0.4 0.2	NA	NA	1.38 (sw) 35	0.4 0.2
1 DN25	1.315 33.7	1.63 (sw) 41	0.5 0.2	3.25 83	0.6 0.3	1.38 (sw) 35	0.4 0.2
1 ¼ DN32	1.660 42.4	1.75 44	0.8 0.4	NA	NA	1.38 35	0.6 0.3
1 ½ DN40	1.900 48.3	1.75 44	1.0 0.4	NA	NA	1.38 35	0.6 0.3
2 DN50	2.375 60.3	1.88 48	1.2 0.5	3.75 95	1.4 0.6	1.38 35	1.0 0.4
2 ½	2.875 73.0	2.00 (sw) 51	2.4 1.1	4.00 102	2.0 0.9	1.50 38	1.6 0.7
DN65	3.000 76.1	2.25 57	2.5 1.1	NA	NA	1.50 38	1.7 0.8
3 DN80	3.500 88.9	2.25 (sw) 57	3.1 1.4	4.50 114	3.1 1.4	1.50 38	2.0 0.9
3 ½ DN90	4.000 101.6	2.50 (sw) 64	4.0 1.8	NA	NA	1.75 (sw) 44	2.8 1.3
	4.250 108.0	2.88 (sw) 73	+	NA	NA	1.75 (sw) 44	+
4 DN100	4.500 114.3	2.88 73	4.8 2.2	5.25 133	4.8 2.2	1.75 44	3.3 1.5
4 ½	5.000 127.0	2.88 (sw) 73	+	NA	NA	1.88 (sw) 48	+
	5.250 133.0	2.88 (sw) 73	+	NA	NA	2.00 (sw) 51	+
DN125	5.500 139.7	2.88 73	6.3 2.9	NA	NA	2.00 51	4.6 2.1
5	5.563 141.3	2.88 (sw) 73	7.8 3.5	NA	NA	2.00 (sw) 51	5.0 2.3
	6.000 152.4	3.13 (sw) 79	+	NA	NA	2.00 (sw) 51	+
	6.250 159.0	3.13 (sw) 79	+	NA	NA	2.00 (sw) 51	+
	6.500 165.1	3.13 79	10.4 4.7	NA	NA	2.00 51	7.1 3.2
6 DN150	6.625 168.3	3.13 (sw) 79	12.2 5.5	6.25 159	12.2 5.5	2.00 51	6.4 2.9

[1] For 14"/DN350 and larger roll grooved systems for carbon steel pipe, Victaulic offers fittings for the Advanced Groove System (AGS). Refer to publication 20.05 for more information. For pricing and availability of cut groove fittings in this size, contact your nearest Victaulic sales representative.

(sw) = Carbon Steel Segmentally Welded

NA = Not Available

"+" = Contact Victaulic for details

NOTE

- All fittings are ductile iron unless otherwise noted with an (sw).

4.0 DIMENSIONS (CONTINUED)

Elbows

No. 12 22 ½° Elbow
No. 13 11 ¼° Elbow

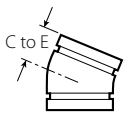

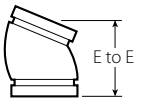

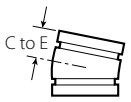

Size		No. 12 22 ½° Elbow		No. 12G (GSNK) 22 ½° Elbow		No. 13 11 ¼° Elbow	
Nominal inches DN	**Actual Outside Diameter** inches mm	**C to E** inches mm	**Approx. Weight (Each)** lb kg	**E to E** inches mm	**Approx. Weight (Each)** lb kg	**C to E** inches mm	**Approx. Weight (Each)** lb kg
8 DN200	8.625 219.1	3.88 (sw) 98	20.0 9.1	7.75 197	18.1 8.2	2.00 51	8.2 3.7
10 DN250	10.750 273.0	4.38 111	30.0 13.6	NA	NA	2.13 54	11.8 5.3
12 DN300	12.750 323.9	4.88 124	40.0 18.1	NA	NA	2.25 57	29.3 13.3
14[1] DN350	14.000 355.6	5.00 (sw) 127	46.0 20.9	NA	NA	3.50 (sw) 89	32.0 14.5
16[1] DN400	16.000 406.4	5.00 (sw) 127	58.0 26.3	NA	NA	4.00 (sw) 102	42.0 19.1
18[1] DN450	18.000 457.2	5.50 (sw) 140	65.0 29.5	NA	NA	4.50 (sw) 114	53.0 24.0
20[1] DN500	20.000 508.0	6.00 (sw) 152	78.6 35.7	NA	NA	5.00 (sw) 127	65.0 29.5
22[1] DN550	22.000 558.8	6.50 (sw) 165	125.0 56.7	NA	NA	5.50 (sw) 140	80.0 36.3
24[1] DN600	24.000 609.6	7.00 (sw) 178	140.0 63.5	NA	NA	6.00 (sw) 152	94.5 42.9
14 – 60 DN350 – DN1500	For AGS fitting information, see publication 20.05 AGS™						

[1] For 14"/DN350 and larger roll grooved systems for carbon steel pipe, Victaulic offers fittings for the Advanced Groove System (AGS). Refer to publication 20.05 for more information. For pricing and availability of cut groove fittings in this size, contact your nearest Victaulic sales representative.

(sw) = Carbon Steel Segmentally Welded

NA = Not Available

"+" = Contact Victaulic for details

NOTE

- All fittings are ductile iron unless otherwise noted with an (sw).

4.0 DIMENSIONS (CONTINUED)

Elbows

No. 100 90° Long Radius Elbow
No. 110 45° Long Radius Elbow

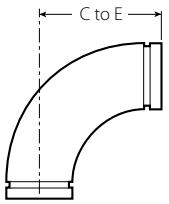

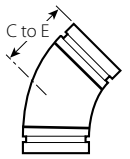

Size		No. 100 90° 1 ½D Long Radius Elbow		No. 110 45° 1 ½D Long Radius Elbow	
Nominal inches DN	**Actual Outside Diameter** inches mm	**C to E** inches mm	**Approx. Weight (Each)** lb kg	**C to E** inches mm	**Approx. Weight (Each)** lb kg
¾ DN20	1.050 26.9	2.50 (s) 64	0.4 0.2	1.75 (s) 44	0.4 0.2
1 DN25	1.315 33.7	2.88 (s) 73	0.8 0.4	2.25 (s) 57	0.6 0.3
1 ¼ DN32	1.660 42.4	3.25 (s) 83	1.1 0.5	2.38 (s) 60	0.9 0.4
1 ½ DN40	1.900 48.3	3.63 (s) 92	2.2 1.0	2.50 (s) 64	1.1 0.5
2 DN50	2.375 60.3	4.38 111	2.6 1.2	2.75 70	1.9 0.9
2 ½	2.875 73.0	5.13 130	3.4 1.5	3.13 (s) 79	3.0 1.4
3 DN80	3.500 88.9	5.88 149	6.0 2.7	3.38 86	3.8 1.7
3 ½ DN90	4.000 101.6	6.63 (s) 168	8.7 3.9	3.63 (s) 92	5.6 2.5
4 DN100	4.500 114.3	7.50 191	10.8 4.9	4.00 102	7.4 3.4
5	5.563 141.3	9.25 235	18.0 8.2	4.25 108	14.8 6.7
	6.500 165.1	10.75 273	25.8 11.7	5.50 140	15.8 7.2
6 DN150	6.625 168.3	10.75 273	30.4 13.8	5.38 137	16.7 7.6
8 DN200	8.625 219.1	14.25 362	68.5 31.1	7.25 184	36.0 16.3
10 DN250	10.750 273.0	15.00 381	81.6 37.0	6.25 159	40.1 18.2
12 DN300	12.750 323.9	18.00 457	138.0 62.6	7.50 191	69.6 31.6
14[1] DN350	14.000 355.6	21.00 533	222.7 101.0	8.75 222	112.4 51.0
16[1] DN400	16.000 406.4	24.00 610	302.0 137.0	10.00 254	158.7 72.0
18[1] DN450	18.000 457.2	27.00 686	421.8 191.3	11.25 286	224.9 102.0
20[1] DN500	20.000 508.0	30.00 762	498.2 226.0	12.50 318	246.9 112.0
22[1] DN550	22.000 558.8	36.00 (s) 914	400.0 181.4	16.50 (s) 419	205.0 93.0
24[1] DN600	24.000 609.6	36.00 914	765.0 347.0	15.00 381	370.4 168.0
14 – 60 DN350 – DN1500	For AGS fitting information, see publication 20.05 AGS™				

[1] For 14"/DN350 and larger roll grooved systems for carbon steel pipe, Victaulic offers fittings for the Advanced Groove System (AGS). Refer to publication 20.05 for more information. For pricing and availability of cut groove fittings in this size, contact your nearest Victaulic sales representative.

(s) = Carbon Steel

NOTE

- All fittings are ductile iron unless otherwise noted with an (s).

4.1 DIMENSIONS

No. 10-DR
90° Drain Elbow

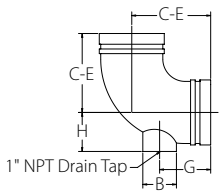

Size		No. 10-DR 90° Drain Elbow					Weight
Nominal inches DN	Actual Outside Diameter inches mm	C to E inches mm	ØB inches mm	G inches mm	H inches mm	Drain Tap NPT inches mm	Approx. (Each) lb kg
2½	2.875 73.0	3.75 95	1.81 46	2.75 70	1.68 43	1 25	3.5 1.6
3 DN80	3.500 88.9	4.25 108	1.81 46	2.75 70	2.13 54	1 25	4.8 2.2
4 DN100	4.500 114.3	5.00 127	1.81 46	2.75 70	2.63 67	1 25	7.8 3.5
6 DN150	6.625 168.3	6.50 165	1.81 46	2.75 70	3.65 93	1 25	18.1 8.2
8 DN200	8.625 219.1	7.75 197	1.81 46	2.75 70	4.50 114	1 25	29.6 13.4

NOTE
- ISO 7-R thread options are available; contact Victaulic.

4.2 DIMENSIONS

Reducing Base Support Elbow

No. R-10G
No. R-10F

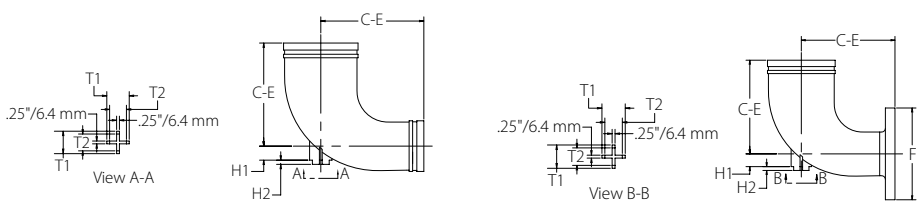

Size						No. R-10G 90° Reducing Base Support Elbow Groove x Groove						No. R-10F 90° Reducing Base Support Elbow Groove x Class 150 Flange*						
Nominal inches DN			Actual Outside Diameter inches mm			C to E inches mm	H1 inches mm	H2 inches mm	T1 inches mm	T2 inches mm	Approx. Weight (Each) lb kg	C to E inches mm	ØF inches mm	H1 inches mm	H2 inches mm	T1 inches mm	T2 inches mm	Approx. Weight (Each) lb kg
6 DN150	x	4 DN100	6.625 168.3	x	4.500 114.3	9.19 233	1.25 32	0.38 10	2.00 51	1.50 38	33.0 15.0	9.19 233	9.00 229	1.25 32	0.38 10	2.00 51	1.50 38	46.0 20.9
		5			5.563 141.3	9.00 229	1.50 38	0.38 10	2.00 51	1.50 38	37.0 16.8	9.00 229	10.00 254	1.50 38	0.38 10	2.00 51	1.50 38	52.0 23.6
8 DN200	x	6 DN150	8.625 219.1	x	6.625 168.3	10.50 267	2.13 54	0.38 10	2.00 51	1.50 38	51.0 23.1	10.50 267	11.00 279	2.13 54	0.38 10	2.00 51	1.50 38	70.0 31.8
10 DN250	x	8 DN200	10.750 273.0	x	8.625 219.1	12.00 305	2.38 60	0.38 10	2.00 51	1.50 38	88.0 39.9	12.00 305	13.50 343	2.38 60	0.38 10	2.00 51	1.50 38	118.0 53.5

* Contact Victaulic for additional flange end options.

For long radius base support elbow options, please refer to publication 07.13.

4.3 DIMENSIONS

Adapter Elbow

No. 18 90º Adapter Elbow
No. 19 45º Adapter Elbow

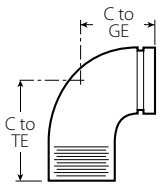

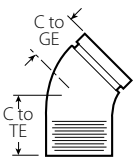

Size		No. 18 90° Adapter Elbow Groove x Male Thread[1]			No. 19 45° Adapter Elbow Groove x Male Thread[1]		
Nominal inches DN	**Actual Outside Diameter** inches mm	**C to GE** inches mm	**C to TE** inches mm	**Approx. Weight (Each)** inches mm	**C to GE** inches mm	**C to TE** inches mm	**Approx. Weight (Each)** lb kg
3/4 DN20	1.050 26.9	2.25 57	2.25 57	0.5 0.2	1.50 38	1.50 38	0.5 0.2
1 DN25	1.315 33.7	2.25 57	2.25 57	0.6 0.3	NA	NA	NA
1 ¼ DN32	1.660 42.4	2.75 70	2.75 70	1.2 0.5	NA	NA	NA
1 ½ DN40	1.900 48.3	2.75 70	2.75 70	1.4 0.7	1.75 44	1.75 44	0.9 0.4
2 DN50	2.375 60.3	3.25 83	4.25 108	2.5 1.1	2.00 51	2.00 51	1.6 0.7
2 ½	2.875 73.0	3.75 95	3.75 95	3.7 1.7	2.25 57	2.25 57	2.3 1.0
3 DN80	3.500 88.9	4.25 108	6.00 152	6.6 3.0	2.50 64	4.25 108	5.0 2.3
4 DN100	4.500 114.3	5.00 127	7.25 184	10.0 4.5	NA	NA	NA
6 DN150	6.625 168.3	6.50 165	6.50 165	19.0 8.6	3.50 89	3.50 89	10.8 4.9

[1] Available with British Standard Pipe Threads, specify "BSP" clearly on order.

NA = Not Available

4.4 DIMENSIONS

Tees, Crosses and True Wyes
No. 20
No. 29M

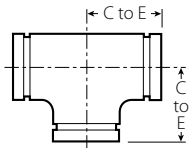

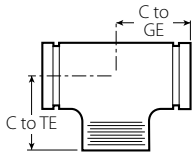

Size		No. 20 Tee		No. 29M Tee Groove x Male Thread[2] Branch		
Nominal inches DN	Actual Outside Diameter inches mm	C to E inches mm	Approx. Weight (Each) lb kg	C to GE inches mm	C to TE lb kg	Approx. Weight (Each) inches mm
¾ DN20	1.050 26.9	2.25 57	0.8 0.4	2.25 (sw) 57	2.25 (sw) 57	0.6 0.3
1 DN25	1.315 33.7	2.25 57	0.9 0.4	2.25 (sw) 57	2.25 (sw) 57	0.9 0.4
1 ¼ DN32	1.660 42.4	2.75 70	1.5 0.7	2.75 70	2.75 70	1.6 0.7
1 ½ DN40	1.900 48.3	2.75 70	1.7 0.8	2.75 70	2.75 70	1.8 0.8
2 DN50	2.375 60.3	3.25 83	2.8 1.3	3.25 83	4.25 108	3.5 1.6
2 ½	2.875 73.0	3.75 95	4.8 2.2	3.75 (sw) 95	3.75 (sw) 95	4.3 2.0
DN65	3.000 76.1	3.75 95	5.3 2.4	3.75 (sw) 95	3.75 (sw) 95	5.2 2.4
3 DN80	3.500 88.9	4.25 108	6.4 2.9	4.25 (sw) 108	4.25 (sw) 108	7.2 3.3
3 ½ DN90	4.000 101.6	4.50 (sw) 114	7.9 3.6	4.50 (sw) 114	4.50 (sw) 114	7.9 3.6
	4.250 108.0	5.00 127	12.0 5.4	5.00 (sw) 127	5.00 (sw) 127	15.5 7.0
4 DN100	4.500 114.3	5.00 127	11.3 5.1	5.00 127	7.25 184	16.3 7.4
4 ½	5.000 127.0	5.25 (sw) 133	15.0 6.8	5.25 (sw) 133	5.25 (sw) 133	15.0 6.8
	5.250 133.0	5.50 140	16.2 7.3	5.50 (sw) 140	5.50 (sw) 140	17.8 8.1
DN125	5.500 139.7	5.50 140	17.8 8.1	5.50 (sw) 140	5.50 (sw) 140	17.8 8.1
5	5.563 141.3	5.50 140	17.8 8.1	5.50 (sw) 140	5.50 (sw) 140	24.0 10.9
	6.000 152.4	6.50 (sw) 165	+	6.50 (sw) 165	6.50 (sw) 165	25.7 11.7
	6.250 159.0	6.50 (sw) 165	+	6.50 (sw) 165	6.50 (sw) 165	27.1 12.3
	6.500 165.1	6.50 165	25.0 11.3	6.50 (sw) 165	6.50 (sw) 165	28.0 12.7
6 DN150	6.625 168.3	6.50 165	25.7 11.7	6.50 (sw) 165	6.50 (sw) 165	33.0 15.0
200A	216.3	7.75 197	43.3 19.6	NA	NA	NA

[1] For 14"/DN350 and larger roll grooved systems for carbon steel pipe, Victaulic offers fittings for the Advanced Groove System (AGS). Refer to publication 20.05 for more information. For pricing and availability of cut groove fittings in this size, contact your nearest Victaulic sales representative.

[2] Available with British Standard Pipe Threads, specify "BSP" clearly on order.

(sw) = Carbon Steel Segmentally Welded

NA = Not Available

"+" = Contact Victaulic for details

NOTES

- All fittings are ductile iron unless otherwise noted with an (sw).

4.3 DIMENSIONS (CONTINUED)

Tees, Crosses and True Wyes

No. 20
No. 29M

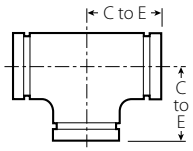

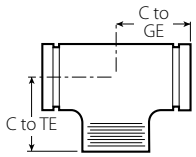

Size		No. 20 Tee		No. 29M Tee Groove x Male Thread[2] Branch		
Nominal inches DN	Actual Outside Diameter inches mm	C to E inches mm	Approx. Weight (Each) lb kg	C to GE inches mm	C to TE lb kg	Approx. Weight (Each) inches mm
8 DN200	8.625 219.1	7.75 197	49.5 22.5	7.75 (sw) 197	7.75 (sw) 197	47.6 21.6
250A	267.4	9.00 229	66.0 29.9	NA	NA	NA
10 DN250	10.750 273.0	9.00 229	72.4 32.8	9.00 (sw) 229	9.00 (sw) 229	99.0 44.9
300A	318.5	10.00 254	95.0 43.1	NA	NA	NA
12 DN300	12.750 323.9	10.00 254	107.2 48.6	10.00 (sw) 254	10.00 (sw) 254	133.0 60.3
14[1] DN350	14.000 355.6	11.00 (sw) 279	150.0 68.0	11.00 (sw) 279	11.00 (sw) 279	+
	14.843 377.0	11.50 292	159.3 72.3	NA	NA	NA
16[1] DN400	16.000 406.4	12.00 (sw) 305	188.0 85.3	12.00 (sw) 305	12.00 (sw) 305	+
	16.772 426.0	13.00 330	211.6 96.0	NA	NA	NA
18[1] DN450	18.000 457.2	15.50 (sw) 394	200.0 90.7	15.50 (sw) 394	15.50 (sw) 394	+
	18.898 480.0	14.57 370	211.6 96.0	NA	NA	NA
20[1] DN500	20.000 508.0	17.25 (sw) 438	339.0 153.8	17.25 (sw) 438	17.25 (sw) 438	+
	20.866 530.0	15.39 391	382.0 173.3	NA	NA	NA
22[1] DN550	22.000 558.8	19.00 (sw) 483	468.0 212.3	19.00 (sw) 483	19.00 (sw) 483	+
24[1] DN600	24.000 609.6	20.00 (sw) 508	592.0 268.5	20.00 (sw) 508	20.00 (sw) 508	+
	24.803 630.0	17.37 441	502.0 227.7	NA	NA	NA
14 – 60 DN350 – DN1500	For AGS fitting information, see publication 20.05 AGS™					

1 For 14"/DN350 and larger roll grooved systems for carbon steel pipe, Victaulic offers fittings for the Advanced Groove System (AGS). Refer to publication 20.05 for more information. For pricing and availability of cut groove fittings in this size, contact your nearest Victaulic sales representative.

2 Available with British Standard Pipe Threads, specify "BSP" clearly on order.

(sw) = Carbon Steel Segmentally Welded

NA = Not Available

"+" = Contact Victaulic for details

NOTES

- All fittings are ductile iron unless otherwise noted with an (sw).

4.4 DIMENSIONS

Tees, Crosses and True Wyes

No. 33
No. 35

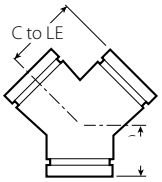

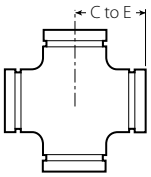

Size		No. 33 True Wye			No. 35 Cross	
Nominal inches DN	**Actual Outside Diameter** inches mm	**C to LE** inches mm	**C to SE** inches mm	**Approx. Weight (Each)** lb kg	**C to E** inches mm	**Approx. Weight (Each)** lb kg
¾ DN20	1.050 26.9	2.25 (sw) 57	2.00 (sw) 51	0.8 0.4	2.25 (sw) 57	0.9 0.4
1 DN25	1.315 33.7	2.25 (sw) 57	2.25 (sw) 57	1.1 0.5	2.25 (sw) 57	1.3 0.6
1 ¼ DN32	1.660 42.4	2.75 (sw) 70	2.50 (sw) 64	1.5 0.7	2.75 (sw) 70	2.1 1.0
1 ½ DN40	1.900 48.3	2.75 (sw) 70	2.75 (sw) 70	1.8 0.8	2.75 (sw) 70	2.5 1.1
2 DN50	2.375 60.3	3.25 (sw) 83	2.75 (sw) 70	2.5 1.1	3.25 83	4.0 1.8
2 ½	2.875 73.0	3.75 (sw) 95	3.00 (sw) 76	5.1 2.3	3.75 95	6.1 2.8
DN65	3.000 76.1	3.75 (sw) 95	3.25 (sw) 83	5.5 2.5	3.75 95	7.8 3.5
3 DN80	3.500 88.9	4.25 (sw) 108	3.25 (sw) 83	6.1 2.8	4.25 108	11.8 5.4
3 ½ DN90	4.000 101.6	4.50 (sw) 114	3.50 (sw) 89	9.6 4.4	4.50 (sw) 114	11.5 5.2
	4.250 108.0	5.00 (sw) 127	3.75 (sw) 95	9.7 4.4	5.00 127	18.4 8.3
4 DN100	4.500 114.3	5.00 127	3.75 95	10.0 4.5	5.00 127	15.8 7.2
4 ½	5.000 127.0	5.25 (sw) 133	4.00 (sw) 102	12.5 5.7	5.25 (sw) 133	18.5 8.4
	5.250 133.0	5.50 (sw) 140	4.00 (sw) 102	13.8 6.2	5.50 (sw) 140	19.0 8.6
DN125	5.500 139.7	5.50 (sw) 140	4.00 (sw) 102	15.0 6.8	5.50 (sw) 140	19.5 8.8
5	5.563 141.3	5.50 (sw) 140	4.00 (sw) 102	15.0 6.8	5.50 140	28.6 13.0
	6.000 152.4	6.50 (sw) 165	4.50 (sw) 114	17.5 7.9	6.50 (sw) 165	22.0 10.0
	6.250 159.0	6.50 (sw) 165	4.50 (sw) 114	19.9 9.0	6.50 165	41.4 18.8
	6.500 165.1	6.50 (sw) 165	4.50 (sw) 114	21.5 9.8	6.50 165	44.0 20.0
6 DN150	6.625 168.3	6.50 (sw) 165	4.50 (sw) 114	22.3 10.1	6.50 165	46.0 20.9
8 DN200	8.625 219.1	7.75 (sw) 197	6.00 (sw) 152	36.0 16.3	7.75 (sw) 197	48.0 21.8

[1] For 14"/DN350 and larger roll grooved systems for carbon steel pipe, Victaulic offers fittings for the Advanced Groove System (AGS). Refer to publication 20.05 for more information. For pricing and availability of cut groove fittings in this size, contact your nearest Victaulic sales representative.

(sw) = Carbon Steel Segmentally Welded

NOTE

- All fittings are ductile iron unless otherwise noted with an (sw).

4.4 DIMENSIONS (CONTINUED)

Tees, Crosses and True Wyes

No. 33
No. 35

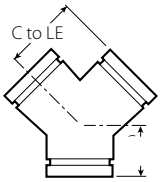

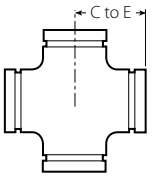

Size		No. 33 True Wye			No. 35 Cross	
Nominal inches DN	**Actual Outside Diameter** inches mm	**C to LE** inches mm	**C to SE** inches mm	**Approx. Weight (Each)** lb kg	**C to E** inches mm	**Approx. Weight (Each)** lb kg
10 DN250	10.750 273.0	9.00 (sw) 229	6.50 (sw) 165	54.5 24.7	9.00 (sw) 229	70.0 31.8
12 DN300	12.750 323.9	10.00 (sw) 254	7.00 (sw) 178	80.0 36.3	10.00 (sw) 254	110.0 49.9
14[1] DN350	14.000 355.6	11.00 (sw) 279	7.50 (sw) 191	134.2 60.9	11.00 (sw) 279	198.0 89.8
16[1] DN400	16.000 406.4	12.00 (sw) 305	8.00 (sw) 203	167.0 75.7	12.00 (sw) 305	250.0 113.4
18[1] DN450	18.000 457.2	15.50 (sw) 394	8.50 (sw) 216	180.0 81.6	15.50 (sw) 394	350.0 158.8
20[1] DN500	20.000 508.0	17.25 (sw) 438	9.00 (sw) 229	200.0 90.7	17.25 (sw) 438	452.0 205.0
22[1] DN550	22.000 558.8	19.00 (sw) 483	9.50 (sw) 241	225.0 102.1	19.00 (sw) 483	624.0 283.0
24[1] DN600	24.000 609.6	20.00 (sw) 508	10.00 (sw) 254	250.0 113.4	20.00 (sw) 508	795.0 360.6
14 – 60 DN350 – DN1500	For AGS fitting information, see publication 20.05 AGS™					

[1] For 14"/DN350 and larger roll grooved systems for carbon steel pipe, Victaulic offers fittings for the Advanced Groove System (AGS). Refer to publication 20.05 for more information. For pricing and availability of cut groove fittings in this size, contact your nearest Victaulic sales representative.

(sw) = Carbon Steel Segmentally Welded

NOTE

- All fittings are ductile iron unless otherwise noted with an (sw).

4.4 DIMENSIONS (CONTINUED)

Reducing Tee

No. 25
No. 29T
No. 29F

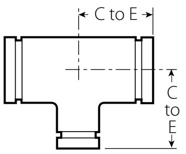

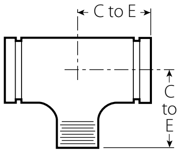

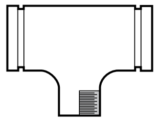

Size										No. 25 Grooved Branch Reducing Tee		No. 29T Reducing Tee Groove x Male Thread[2] Branch		No. 29F[2] Reducing Tee Groove x Female Thread[2] Branch	
Nominal inches DN					Actual Outside Diameter inches mm					C to E inches mm	Approx. Weight (Each) lb kg	C to E inches mm	Approx. Weight (Each) lb kg	C to E inches mm	Approx. Weight (Each) lb kg
1 DN25	x	1 DN25	x	¾ DN20	1.315 33.7	x	1.315 33.7	x	1.050 26.9	2.25 (sw) 57	0.8 0.4	2.25 (sw) 57	0.8 0.4	NA	NA
1 ¼ DN32	x	1 ¼ DN32	x	¾ DN20	1.660 42.4	x	1.660 42.4	x	1.050 26.9	2.75 (sw) 70	1.0 0.5	2.75 (sw) 70	1.0 0.5	NA	NA
				1 DN25					1.315 33.7	2.75 (sw) 70	1.3 0.6	2.75 (sw) 70	1.5 0.7	NA	NA
1 ½ DN40	x	1 ½ DN40	x	¾ DN20	1.900 48.3	x	1.900 48.3	x	1.050 26.9	2.75 (sw) 70	1.5 0.7	2.75 (sw) 70	1.5 0.7	NA	NA
				1 DN25					1.315 33.7	2.75 (sw) 70	1.5 0.7	2.75 (sw) 70	1.8 0.8	NA	NA
				1 ¼ DN32					1.660 42.4	2.75 (sw) 70	2.1 1.0	2.75 (sw) 70	1.7 0.8	NA	NA
2 DN50	x	2 DN50	x	¾ DN20	2.375 60.3	x	2.375 60.3	x	1.050 26.9	3.25 83	2.5 1.1	3.25 83	2.5 1.1	NA	NA
				1 DN25					1.315 33.7	3.25 83	2.7 1.2	3.25 83	2.7 1.2	NA	NA
				1 ¼ DN32					1.660 42.4	3.25 (sw) 83	2.3 1.0	3.25 (sw) 83	2.3 1.0	NA	NA
				1 ½ DN40					1.900 48.3	3.25 83	3.2 1.5	3.25 83	3.2 1.5	NA	NA
2½	x	2½	x	¾ DN20	2.875 73.0	x	2.875 73.0	x	1.050 26.9	3.75 (sw) 95	3.9 1.8	3.75 (sw) 95	3.0 1.4	NA	NA
				1 DN25					1.315 33.7	3.75 95	3.8 1.7	3.75 95	3.8 1.7	NA	NA
				1 ¼ DN32					1.660 42.4	3.75 95	4.0 1.8	3.75 95	4.0 1.8	NA	NA
				1 ½ DN40					1.900 48.3	3.75 95	4.8 2.2	3.75 95	4.8 2.2	NA	NA
				2 DN50					2.375 60.3	3.75 95	4.5 2.0	3.75 95	4.5 2.0	NA	NA
DN65	x	DN65	x	¾ DN20	3.000 76.1	x	3.000 76.1	x	1.050 26.9	3.75 (sw) 95	+	3.75 (sw) 95	+	NA	NA
				1 DN25					1.315 33.7	3.75 (sw) 95	+	3.75 (sw) 95	+	NA	NA
				1 ¼ DN32					1.660 42.4	3.75 (sw) 95	+	3.75 (sw) 95	+	NA	NA
				1 ½ DN40					1.900 48.3	3.75 (sw) 95	+	3.75 (sw) 95	+	NA	NA
				2 DN50					2.375 60.3	3.75 95	4.6 2.1	3.75 95	4.6 2.1	NA	NA

[1] For 14"/DN350 and larger roll grooved systems for carbon steel pipe, Victaulic offers fittings for the Advanced Groove System (AGS). Refer to publication 20.05 for more information. For pricing and availability of cut groove fittings in this size, contact your nearest Victaulic sales representative.

[2] Available with British Standard Pipe Threads, specify "BSP" clearly on order.

(sw) = Carbon Steel Segmentally Welded

NA = Not Available

"+" = Contact Victaulic for details

NOTES

- All fittings are ductile iron unless otherwise noted with an (sw).

4.4 DIMENSIONS (CONTINUED)

Reducing Tee

No. 25
No. 29T
No. 29F

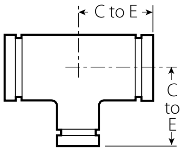

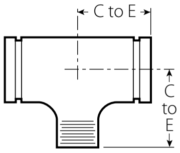

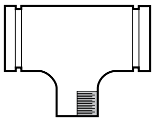

Size						No. 25 Grooved Branch Reducing Tee		No. 29T Reducing Tee Groove x Male Thread[2] Branch		No. 29F[2] Reducing Tee Groove x Female Thread[2] Branch	
Nominal inches DN			Actual Outside Diameter inches mm			C to E inches mm	Approx. Weight (Each) lb kg	C to E inches mm	Approx. Weight (Each) lb kg	C to E inches mm	Approx. Weight (Each) lb kg
3 DN80	x 3 DN80	x ¾ DN20	3.500 88.9	x 3.500 88.9	x 1.050 26.9	4.25 (sw) 108	5.7 2.6	4.25 (sw) 108	5.7 2.6	NA	NA
		1 DN25			1.315 33.7	4.25 108	6.0 2.7	4.25 108	6.0 2.7	NA	NA
		1 ¼ DN32			1.660 42.4	4.25 108	6.0 2.7	4.25 108	6.3 2.9	NA	NA
		1 ½ DN40			1.900 48.3	4.25 108	6.6 3.0	4.25 108	6.6 3.0	NA	NA
		2 DN50			2.375 60.3	4.25 108	6.2 2.8	4.25 108	6.2 2.8	4.25 108	6.2 2.8
		2 ½			2.875 73.0	4.25 108	6.6 3.0	4.25 108	6.6 3.0	NA	NA
		DN65			3.000 76.1	4.25 108	6.8 3.1	4.25 108	11.6 5.3	NA	NA
3 ½ DN90	x 3 ½ DN90	x ¾ DN20	4.000 101.6	x 4.000 101.6	x 1.050 26.9	4.50 (sw) 114	+	4.50 (sw) 114	+	NA	NA
		1 DN25			1.315 33.7	4.50 (sw) 114	+	4.50 (sw) 114	+	NA	NA
		1 ¼ DN32			1.660 42.4	4.50 (sw) 114	+	4.50 (sw) 114	+	NA	NA
		1 ½ DN40			1.900 48.3	4.50 (sw) 114	+	4.50 (sw) 114	+	NA	NA
		2 DN50			2.375 60.3	4.50 (sw) 114	+	4.50 (sw) 114	+	NA	NA
		2 ½			2.875 73.0	4.50 (sw) 114	+	4.50 (sw) 114	+	NA	NA
		3 DN80			3.500 88.9	4.50 (sw) 114	+	4.50 (sw) 114	+	NA	NA
			4.250 108.0	x 4.250 108.0	x 1.050 26.9	5.00 (sw) 127	+	5.00 (sw) 127	+	5.00 (sw) 127	+
					1.315 33.7	5.00 (sw) 127	+	5.00 (sw) 127	+	5.00 (sw) 127	+
					1.660 42.4	5.00 (sw) 127	+	5.00 (sw) 127	+	5.00 (sw) 127	+
					1.900 48.3	5.00 (sw) 127	+	5.00 (sw) 127	+	5.00 (sw) 127	+
					2.375 60.3	5.00 (sw) 127	+	5.00 (sw) 127	+	5.00 (sw) 127	+
					3.000 76.1	5.00 (sw) 127	+	5.00 (sw) 127	+	5.00 (sw) 127	+
					3.500 88.9	5.00 127	9.5 4.3	5.00 (sw) 127	+	NA	NA

[1] For 14"/DN350 and larger roll grooved systems for carbon steel pipe, Victaulic offers fittings for the Advanced Groove System (AGS). Refer to publication 20.05 for more information. For pricing and availability of cut groove fittings in this size, contact your nearest Victaulic sales representative.

[2] Available with British Standard Pipe Threads, specify "BSP" clearly on order.

(sw) = Carbon Steel Segmentally Welded

NA = Not Available

"+" = Contact Victaulic for details

NOTES

- All fittings are ductile iron unless otherwise noted with an (sw).

4.4 DIMENSIONS (CONTINUED)

Reducing Tee

No. 25
No. 29T
No. 29F

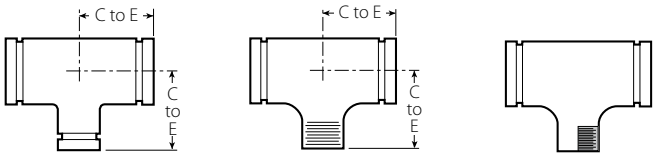

Size										No. 25 Grooved Branch Reducing Tee		No. 29T Reducing Tee Groove x Male Thread[2] Branch		No. 29F[2] Reducing Tee Groove x Female Thread[2] Branch	
Nominal inches DN					Actual Outside Diameter inches mm					C to E inches mm	Approx. Weight (Each) lb kg	C to E inches mm	Approx. Weight (Each) lb kg	C to E inches mm	Approx. Weight (Each) lb kg
4 DN100	x	4 DN100	x	¾ DN20	4.500 114.3	x	4.500 114.3	x	1.050 26.9	5.00 (sw) 127	8.0 3.6	5.00 (sw) 127	9.3 4.2	NA	NA
				1 DN25					1.315 33.7	5.00 127	9.1 4.1	5.00 127	9.1 4.1	NA	NA
				1 ¼ DN32					1.660 42.4	5.00 (sw) 127	8.9 4.0	5.00 (sw) 127	10.0 4.5	NA	NA
				1 ½ DN40					1.900 48.3	5.00 127	10.2 4.6	5.00 127	10.2 4.6	NA	NA
				2 DN50					2.375 60.3	5.00 127	11.2 5.1	5.00 127	11.2 5.1	NA	NA
				2 ½					2.875 73.0	5.00 127	11.5 5.2	5.00 127	11.5 5.2	NA	NA
				DN65					3.000 76.1	5.00 127	10.3 4.7	5.00 127	10.3 4.7	NA	NA
				3 DN80					3.500 88.9	5.00 127	11.6 5.3	5.00 127	11.6 5.3	NA	NA
					5.250 133.0	x	5.250 133.0	x	1.050 26.9	5.50 (sw) 140	+	5.50 (sw) 140	+	5.50 (sw) 140	+
									1.315 33.7	5.50 (sw) 140	+	5.50 (sw) 140	+	5.50 (sw) 140	+
									1.660 42.4	5.50 (sw) 140	+	5.50 (sw) 140	+	5.50 (sw) 140	+
									1.900 48.3	5.50 (sw) 140	+	5.50 (sw) 140	+	5.50 (sw) 140	+
									2.375 60.3	5.50 (sw) 140	+	5.50 (sw) 140	+	NA	NA
									3.000 76.1	5.50 (sw) 140	+	5.50 (sw) 140	+	5.50 (sw) 140	+
									3.500 88.9	5.50 (sw) 140	+	5.50 (sw) 140	+	5.50 (sw) 140	+
									4.250 108.0	5.50 140	12.9 5.9	5.50 (sw) 140	+	NA	NA

1 For 14"/DN350 and larger roll grooved systems for carbon steel pipe, Victaulic offers fittings for the Advanced Groove System (AGS). Refer to publication 20.05 for more information. For pricing and availability of cut groove fittings in this size, contact your nearest Victaulic sales representative.

2 Available with British Standard Pipe Threads, specify "BSP" clearly on order.

(sw) = Carbon Steel Segmentally Welded

NA = Not Available

"+" = Contact Victaulic for details

NOTES

- All fittings are ductile iron unless otherwise noted with an (sw).

4.4 DIMENSIONS (CONTINUED)

Reducing Tee

No. 25
No. 29T
No. 29F

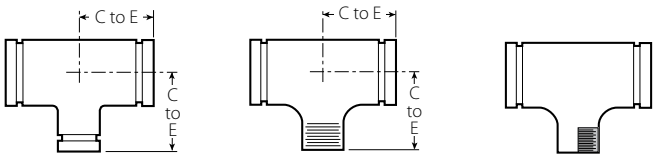

Size										No. 25 Grooved Branch Reducing Tee		No. 29T Reducing Tee Groove x Male Thread[2] Branch		No. 29F[2] Reducing Tee Groove x Female Thread[2] Branch	
Nominal inches DN				Actual Outside Diameter inches mm						C to E inches mm	Approx. Weight (Each) lb kg	C to E inches mm	Approx. Weight (Each) lb kg	C to E inches mm	Approx. Weight (Each) lb kg
DN125	x	DN125	x	¾ DN20	5.500 139.7	x	5.500 139.7	x	1.050 26.9	5.50 (sw) 140	+	5.50 (sw) 140	+	NA	NA
				1 DN25					1.315 33.7	5.50 (sw) 140	+	5.50 (sw) 140	+	NA	NA
				1 ¼ DN32					1.660 42.4	5.50 (sw) 140	+	5.50 (sw) 140	+	NA	NA
				1 ½ DN40					1.900 48.3	5.50 (sw) 140	+	5.50 (sw) 140	+	NA	NA
				2 DN50					2.375 60.3	5.50 140	13.5 6.1	5.50 (sw) 140	+	NA	NA
				DN65					3.000 76.1	5.50 (sw) 140	+	5.50 (sw) 140	+	NA	NA
				3 DN80					3.500 88.9	5.50 140	13.8 6.3	5.50 (sw) 140	+	NA	NA
									4.250 108.0	5.50 (sw) 140	+	5.50 (sw) 140	+	NA	NA
				4 DN100					4.500 114.3	5.50 140	14.4 6.5	5.50 (sw) 140	+	NA	NA
5	x	5	x	¾ DN20	5.563 141.3	x	5.563 141.3	x	1.050 26.9	5.50 (sw) 140	+	5.50 (sw) 140	+	NA	NA
				1 DN25					1.315 33.7	5.50 (sw) 140	14.0 6.4	5.50 (sw) 140	14.0 6.4	NA	NA
				1 ¼ DN32					1.660 42.4	5.50 (sw) 140	+	5.50 (sw) 140	+	NA	NA
				1 ½ DN40					1.900 48.3	5.50 (sw) 140	14.3 6.5	5.50 (sw) 140	14.5 6.6	NA	NA
				2 DN50					2.375 60.3	5.50 (sw) 140	14.5 6.6	5.50 (sw) 140	14.5 6.6	NA	NA
				2 ½					2.875 73.0	5.50 140	15.5 7.0	5.50 140	15.8 7.2	NA	NA
				3 DN80					3.500 88.9	5.50 140	12.6 5.7	5.50 (sw) 140	17.0 7.7	NA	NA
				4 DN100					4.500 114.3	5.50 140	16.0 7.3	5.50 (sw) 140	16.0 7.3	NA	NA

[1] For 14"/DN350 and larger roll grooved systems for carbon steel pipe, Victaulic offers fittings for the Advanced Groove System (AGS). Refer to publication 20.05 for more information. For pricing and availability of cut groove fittings in this size, contact your nearest Victaulic sales representative.

[2] Available with British Standard Pipe Threads, specify "BSP" clearly on order.

(sw) = Carbon Steel Segmentally Welded

NA = Not Available

"+" = Contact Victaulic for details

NOTES

- All fittings are ductile iron unless otherwise noted with an (sw).

4.4 DIMENSIONS (CONTINUED)

Reducing Tee

No. 25
No. 29T
No. 29F

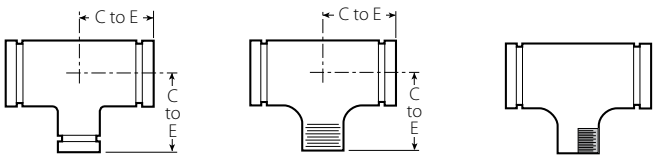

Size						No. 25 Grooved Branch Reducing Tee		No. 29T Reducing Tee Groove x Male Thread[2] Branch		No. 29F[2] Reducing Tee Groove x Female Thread[2] Branch	
Nominal inches DN	**Actual Outside Diameter** inches mm					**C to E** inches mm	**Approx. Weight (Each)** lb kg	**C to E** inches mm	**Approx. Weight (Each)** lb kg	**C to E** inches mm	**Approx. Weight (Each)** lb kg
	6.000 152.4	x	6.000 152.4	x	1.050 26.9	6.50 (sw) 165	+	6.50 (sw) 165	+	NA	NA
					1.315 33.7	6.50 (sw) 165	+	6.50 (sw) 165	+	NA	NA
					1.660 42.4	6.50 (sw) 165	+	6.50 (sw) 165	+	NA	NA
					1.900 48.3	6.50 (sw) 165	+	6.50 (sw) 165	+	NA	NA
					2.375 60.3	6.50 (sw) 165	+	6.50 (sw) 165	+	NA	NA
					3.000 76.1	6.50 (sw) 165	+	6.50 (sw) 165	+	NA	NA
					3.500 88.9	6.50 (sw) 165	+	6.50 (sw) 165	+	NA	NA
					4.250 108.0	6.50 (sw) 165	+	6.50 (sw) 165	+	NA	NA
					4.500 114.3	6.50 (sw) 165	+	6.50 (sw) 165	+	NA	NA
					5.250 133.0	6.50 (sw) 165	+	6.50 (sw) 165	+	NA	NA

[1] For 14"/DN350 and larger roll grooved systems for carbon steel pipe, Victaulic offers fittings for the Advanced Groove System (AGS). Refer to publication 20.05 for more information. For pricing and availability of cut groove fittings in this size, contact your nearest Victaulic sales representative.

[2] Available with British Standard Pipe Threads, specify "BSP" clearly on order.

(sw) = Carbon Steel Segmentally Welded

NA = Not Available

"+" = Contact Victaulic for details

NOTES

- All fittings are ductile iron unless otherwise noted with an (sw).

4.4 DIMENSIONS (CONTINUED)

Reducing Tee

No. 25
No. 29T
No. 29F

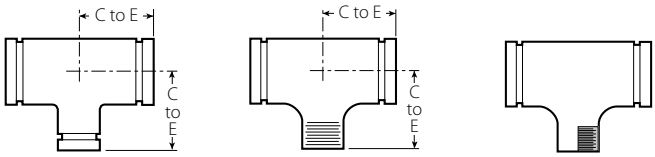

Size						No. 25 Grooved Branch Reducing Tee		No. 29T Reducing Tee Groove x Male Thread[2] Branch		No. 29F[2] Reducing Tee Groove x Female Thread[2] Branch	
Nominal inches DN	Actual Outside Diameter inches mm					C to E inches mm	Approx. Weight (Each) lb kg	C to E inches mm	Approx. Weight (Each) lb kg	C to E inches mm	Approx. Weight (Each) lb kg
	6.250 159.0	x	6.250 159.0	x	1.050 26.9	6.50 (sw) 165	+	6.50 (sw) 165	+	6.50 (sw) 165	+
					1.315 33.7	6.50 (sw) 165	+	6.50 (sw) 165	+	6.50 (sw) 165	+
					1.660 42.4	6.50 (sw) 165	+	6.50 (sw) 165	+	6.50 (sw) 165	+
					1.900 48.3	6.50 (sw) 165	+	6.50 (sw) 165	+	6.50 (sw) 165	+
					2.375 60.3	6.50 (sw) 165	+	6.50 (sw) 165	+	6.50 (sw) 165	+
					3.000 76.1	6.50 (sw) 165	+	6.50 (sw) 165	+	6.50 (sw) 165	+
					3.500 88.9	6.50 165	18.5 8.4	6.50 (sw) 165	+	NA	NA
					4.250 108.0	6.50 165	18.5 8.4	6.50 (sw) 165	+	NA	NA
					4.500 114.3	6.50 165	12.1 5.5	6.50 (sw) 165	+	NA	NA
					5.250 133.0	6.50 165	19.0 8.6	6.50 (sw) 165	+	NA	NA
	6.500 165.1	x	6.500 165.1	x	1.050 26.9	6.50 (sw) 165	+	6.50 (sw) 165	+	NA	NA
					1.315 33.7	6.50 (sw) 165	10.8 4.9	6.50 (sw) 165	10.8 4.9	NA	NA
					1.660 42.4	6.50 (sw) 165	11.0 5.0	6.50 (sw) 165	11.0 5.0	NA	NA
					1.900 48.3	6.50 (sw) 165	11.3 5.1	6.50 (sw) 165	11.3 5.1	NA	NA
					2.375 60.3	6.50 165	18.9 8.6	6.50 165	18.9 8.6	NA	NA
					3.000 76.1	6.50 165	20.0 9.1	6.50 (sw) 165	+	NA	NA
					3.500 88.9	6.50 165	24.3 11.0	6.50 (sw) 165	+	NA	NA
					4.500 114.3	6.50 165	23.8 10.8	6.50 (sw) 165	+	NA	NA
					5.500 139.7	6.50 165	26.0 11.8	6.50 (sw) 165	+	NA	NA

1 For 14"/DN350 and larger roll grooved systems for carbon steel pipe, Victaulic offers fittings for the Advanced Groove System (AGS). Refer to publication 20.05 for more information. For pricing and availability of cut groove fittings in this size, contact your nearest Victaulic sales representative.

2 Available with British Standard Pipe Threads, specify "BSP" clearly on order.

(sw) = Carbon Steel Segmentally Welded

NA = Not Available

"+" = Contact Victaulic for details

NOTES

- All fittings are ductile iron unless otherwise noted with an (sw).

4.4 DIMENSIONS (CONTINUED)

Reducing Tee

No. 25
No. 29T
No. 29F

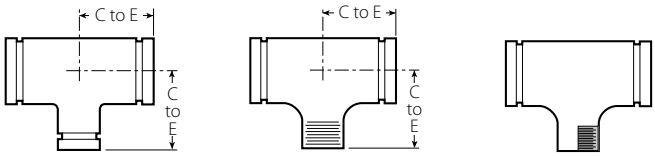

Size		No. 25 Grooved Branch Reducing Tee		No. 29T Reducing Tee Groove x Male Thread[2] Branch		No. 29F[2] Reducing Tee Groove x Female Thread[2] Branch	
Nominal inches DN	Actual Outside Diameter inches mm	C to E inches mm	Approx. Weight (Each) lb kg	C to E inches mm	Approx. Weight (Each) lb kg	C to E inches mm	Approx. Weight (Each) lb kg
6 x 6 x ¾ DN150 DN150 DN20	6.625 x 6.625 x 1.050 168.3 168.3 26.9	6.50 (sw) 165	+	6.50 (sw) 165	+	NA	NA
1 DN25	1.315 33.7	6.50 (sw) 165	23.0 10.4	6.50 (sw) 165	23.0 10.4	NA	NA
1¼ DN32	1.660 42.4	6.50 (sw) 165	25.0 11.3	6.50 (sw) 165	25.0 11.3	NA	NA
1½ DN40	1.900 48.3	6.50 (sw) 165	25.0 11.3	6.50 (sw) 165	25.0 11.3	NA	NA
2 DN50	2.375 60.3	6.50 165	22.8 10.3	6.50 165	22.8 10.3	NA	NA
2½	2.875 73.0	6.50 165	23.8 10.8	6.50 165	25.2 11.4	NA	NA
DN65	3.000 76.1	6.50 (sw) 165	+	6.50 165	+	NA	NA
3 DN80	3.500 88.9	6.50 165	24.8 11.2	6.50 165	24.9 11.3	NA	NA
4 DN100	4.500 114.3	6.50 165	24.8 11.2	6.50 165	22.1 10.0	NA	NA
DN125	5.500 139.7	6.50 (sw) 165	+	6.50 (sw) 165	+	NA	NA
5	5.563 141.3	6.50 165	26.7 12.1	6.50 (sw) 165	26.7 12.1	NA	NA
200A x 200A x 65A	216.3 x 216.3 x 76.3	7.75 (sw) 197	+	NA	NA	NA	NA
100A	114.3	7.75 (sw) 197	+	NA	NA	NA	NA
165A		7.75 197	50.0 22.7	NA	NA	NA	NA

1 For 14"/DN350 and larger roll grooved systems for carbon steel pipe, Victaulic offers fittings for the Advanced Groove System (AGS). Refer to publication 20.05 for more information. For pricing and availability of cut groove fittings in this size, contact your nearest Victaulic sales representative.

2 Available with British Standard Pipe Threads, specify "BSP" clearly on order.

(sw) = Carbon Steel Segmentally Welded

NA = Not Available

"+" = Contact Victaulic for details

NOTES

- All fittings are ductile iron unless otherwise noted with an (sw).

4.4 DIMENSIONS (CONTINUED)

Reducing Tee

No. 25
No. 29T
No. 29F

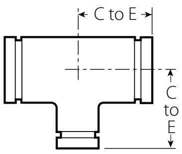

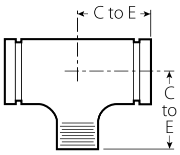

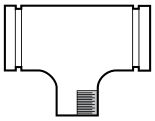

Size		No. 25 Grooved Branch Reducing Tee		No. 29T Reducing Tee Groove x Male Thread[2] Branch		No. 29F[2] Reducing Tee Groove x Female Thread[2] Branch	
Nominal inches DN	**Actual Outside Diameter** inches mm	**C to E** inches mm	**Approx. Weight (Each)** lb kg	**C to E** inches mm	**Approx. Weight (Each)** lb kg	**C to E** inches mm	**Approx. Weight (Each)** lb kg
8 x 8 x ¾ DN200 DN200 DN20	8.625 x 8.625 x 1.050 219.1 219.1 26.9	7.75 (sw) 197	+	7.75 (sw) 197	+	7.75 (sw) 197	+
1 DN25	1.315 33.7	7.75 (sw) 197	+	7.75 (sw) 197	+	7.80 (sw) 198	+
1 ¼ DN32	1.660 42.4	7.75 (sw) 197	+	7.75 (sw) 197	+	7.80 (sw) 198	+
1 ½ DN40	1.900 48.3	7.75 (sw) 197	33.0 15.0	7.75 (sw) 197	37.7 17.1	7.80 (sw) 198	+
2 DN50	2.375 60.3	7.75 (sw) 197	33.5 15.2	7.75 (sw) 197	33.5 15.2	NA	NA
2 ½	2.875 73.0	7.75 197	37.3 16.9	7.75 (sw) 197	34.0 15.4	NA	NA
DN65	3.000 76.1	7.75 (sw) 197	37.5 17.0	NA	NA	7.80 (sw) 198	+
3 DN80	3.500 88.9	7.75 197	37.5 17.0	7.75 (sw) 197	33.6 15.2	NA	NA
	4.250 108.0	7.75 197	48.9 22.2	NA	NA	NA	NA
4 DN100	4.500 114.3	7.75 197	42.9 19.5	7.75 (sw) 197	35.0 15.9	NA	NA
	5.250 133.0	9.02 229	54.6 24.8	7.75 (sw) 197	+	NA	NA
DN125	5.500 139.7	7.75 (sw) 197	+	NA	NA	NA	NA
5	5.563 141.3	7.75 197	37.0 16.8	7.75 (sw) 197	37.0 16.8	NA	NA
	6.250 159.0	7.75 197	51.6 23.4	7.75 (sw) 197	+	NA	NA
	6.500 165.1	7.75 197	43.2 19.6	7.75 (sw) 197	+	NA	NA
6 DN150	6.625 168.3	7.75 197	48.5 22.0	7.75 (sw) 197	43.0 19.5	NA	NA
	10.528 10.528 6.500 267.4 267.4 165.1	9.00 229	68.4 31.0	NA	NA	NA	NA
250A x 250A x 4 DN100	267.4 x 267.4 x 4.5 114.3	9.00 (sw) 229	+	NA	NA	NA	NA
125A	139.8	9.00 (sw) 229	+	NA	NA	NA	NA
200A	216.3	9.00 229	82.0 37.2	NA	NA	NA	NA

[1] For 14"/DN350 and larger roll grooved systems for carbon steel pipe, Victaulic offers fittings for the Advanced Groove System (AGS). Refer to publication 20.05 for more information. For pricing and availability of cut groove fittings in this size, contact your nearest Victaulic sales representative.

[2] Available with British Standard Pipe Threads, specify "BSP" clearly on order.

(sw) = Carbon Steel Segmentally Welded

NA = Not Available

"+" = Contact Victaulic for details

NOTES

- All fittings are ductile iron unless otherwise noted with an (sw).

4.4 DIMENSIONS (CONTINUED)

Reducing Tee

No. 25
No. 29T
No. 29F

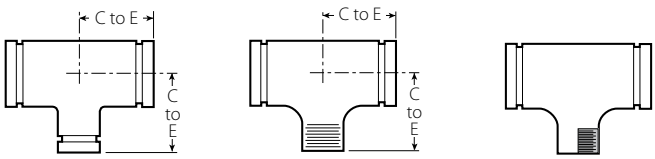

Size										No. 25 Grooved Branch Reducing Tee		No. 29T Reducing Tee Groove x Male Thread[2] Branch		No. 29F[2] Reducing Tee Groove x Female Thread[2] Branch	
Nominal inches DN					Actual Outside Diameter inches mm					C to E inches mm	Approx. Weight (Each) lb kg	C to E inches mm	Approx. Weight (Each) lb kg	C to E inches mm	Approx. Weight (Each) lb kg
10 DN250	x	10 DN250	x	¾ DN20	10.750 273.0	x	10.750 273.0	x	1.050 26.9	9.00 (sw) 229	+	9.00 (sw) 229	+	NA	NA
				1 DN25					1.315 33.7	9.00 (sw) 229	+	9.00 (sw) 229	+	NA	NA
				1 ¼ DN32					1.660 42.4	9.00 (sw) 229	+	9.00 (sw) 229	+	NA	NA
				1 ½ DN40					1.900 48.3	9.00 (sw) 229	57.0 25.9	9.00 (sw) 229	57.0 25.9	NA	NA
				2 DN50					2.375 60.3	9.00 (sw) 229	62.0 28.1	9.00 (sw) 229	65.0 29.5	9.00 (sw) 229	+
				2 ½					2.875 73.0	9.00 229	62.5 28.3	9.00 (sw) 229	53.0 24.0	NA	NA
				DN65					3.000 76.1	9.00 (sw) 229	71.2 32.3	NA	NA	NA	NA
				3 DN80					3.500 88.9	9.00 229	62.1 28.2	9.00 (sw) 229	60.0 27.2	NA	NA
									4.250 108.0	9.02 229	77.6 35.2	9.00 (sw) 229	+	NA	NA
				4 DN100					4.500 114.3	9.00 229	61.0 27.7	9.00 (sw) 229	61.0 27.7	NA	NA
									5.250 133.0	9.02 229	84.2 38.2	9.00 (sw) 229	+	NA	NA
				DN125					5.500 139.7	9.00 (sw) 229	+	9.00 (sw) 229	+	NA	NA
									6.250 159.0	9.02 229	84.9 38.5	9.00 (sw) 229	+	NA	NA
				5					5.563 141.3	9.00 (sw) 229	52.0 23.6	9.00 (sw) 229	52.0 23.6	NA	NA
									6.250 159.0	9.00 229	61.0 27.7	9.00 (sw) 229	+	NA	NA
									6.500 165.1	9.00 229	64.2 29.1	9.00 (sw) 229	+	NA	NA
				6 DN150					6.625 168.3	9.00 229	59.0 26.8	9.00 (sw) 229	60.0 27.2	NA	NA
				8 DN200					8.625 219.1	9.00 229	64.7 29.3	9.00 (sw) 229	64.7 29.3	NA	NA
300A	x	300A	x	150A	318.5	x	318.5	x	165.2	10.00 (sw) 254	+	NA	NA	NA	NA
				200A					216.3	10.00 (sw) 254	+	NA	NA	NA	NA
				250A					267.4	10.00 254	111.0 50.3	NA	NA	NA	NA

1 For 14"/DN350 and larger roll grooved systems for carbon steel pipe, Victaulic offers fittings for the Advanced Groove System (AGS). Refer to publication 20.05 for more information. For pricing and availability of cut groove fittings in this size, contact your nearest Victaulic sales representative.

2 Available with British Standard Pipe Threads, specify "BSP" clearly on order.

(sw) = Carbon Steel Segmentally Welded

NA = Not Available

"+" = Contact Victaulic for details

NOTES

- All fittings are ductile iron unless otherwise noted with an (sw).

4.4 DIMENSIONS (CONTINUED)

Reducing Tee
No. 25
No. 29T
No. 29F

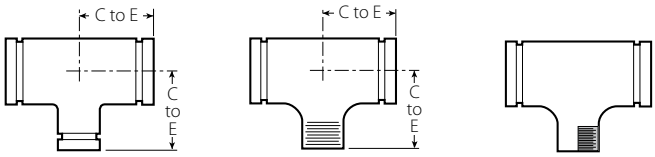

Size										No. 25 Grooved Branch Reducing Tee		No. 29T Reducing Tee Groove x Male Thread[2] Branch		No. 29F[2] Reducing Tee Groove x Female Thread[2] Branch	
Nominal inches DN					Actual Outside Diameter inches mm					C to E inches mm	Approx. Weight (Each) lb kg	C to E inches mm	Approx. Weight (Each) lb kg	C to E inches mm	Approx. Weight (Each) lb kg
12 DN300	x	12 DN300	x	¾ DN20	12.750 323.9	x	12.750 323.9	x	1.050 26.9	10.00 (sw) 254	+	NA	NA	10.00 (sw) 254	+
				1 DN25					1.315 33.7	10.00 (sw) 254	70.0 31.8	10.00 (sw) 254	77.0	10.00 (sw) 254	+
				1 ¼ DN32					1.660 42.4	10.00 (sw) 254	+	10.00 (sw) 254	+	10.00 (sw) 254	+
				1 ½ DN40					1.900 48.3	10.00 (sw) 254	+	10.00 (sw) 254	+	10.00 254	+
				2 DN50					2.375 60.3	10.00 (sw) 254	78.0 35.4	10.00 (sw) 254	78.0 35.4	10.00 (sw) 254	+
				2 ½					2.875 73.0	10.00 (sw) 254	80.0 36.3	10.00 (sw) 254	80.0 36.3	NA	NA
				DN65					3.000 76.1	10.00 (sw) 254	+	10.00 (sw) 254	+	10.00 (sw) 254	+
				3 DN80					3.500 88.9	10.00 (sw) 254	80.0 36.3	10.00 (sw) 254	86.5 39.2	NA	NA
									4.250 108.0	10.00 254	+	10.00 (sw) 254	+	NA	NA
				4 DN100					4.500 114.3	10.00 (sw) 254	86.7 39.3	10.00 (sw) 254	77.0 34.9	NA	NA
									5.250 133.0	10.00 254	130.0 59.0	10.00 (sw) 254	+	NA	NA
				DN125					5.500 139.7	10.00 (sw) 254	81.8 37.1	10.00 (sw) 254	+	NA	NA
				5					5.563 141.3	10.00 (sw) 254	75.0 34.0	10.00 (sw) 254	75.0 34.0	NA	NA
									6.250 159.0	10.00 254	125.6 57.0	10.00 (sw) 254	+	NA	NA
									6.500 165.1	10.00 (sw) 254	+	10.00 (sw) 254	+	NA	NA
				6 DN150					6.625 168.3	10.00 254	88.5 40.2	10.00 (sw) 254	75.0 34.0	NA	NA
				8 DN200					8.625 219.1	10.00 254	80.0 36.3	10.00 (sw) 254	80.0 36.3	NA	NA
				10 DN250					10.750 273.0	10.00 254	123.5 56.0	10.00 (sw) 254	84.0 38.1	NA	NA

[1] For 14"/DN350 and larger roll grooved systems for carbon steel pipe, Victaulic offers fittings for the Advanced Groove System (AGS). Refer to publication 20.05 for more information. For pricing and availability of cut groove fittings in this size, contact your nearest Victaulic sales representative.

[2] Available with British Standard Pipe Threads, specify "BSP" clearly on order.

(sw) = Carbon Steel Segmentally Welded

NA = Not Available

"+" = Contact Victaulic for details

NOTES

- All fittings are ductile iron unless otherwise noted with an (sw).

4.4 DIMENSIONS (CONTINUED)

Reducing Tee

No. 25
No. 29T
No. 29F

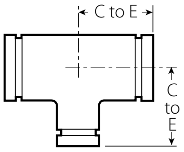

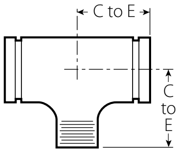

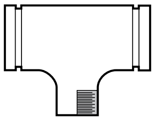

Size										No. 25 Grooved Branch Reducing Tee		No. 29T Reducing Tee Groove x Male Thread[2] Branch		No. 29F[2] Reducing Tee Groove x Female Thread[2] Branch	
Nominal inches DN					Actual Outside Diameter inches mm					C to E inches mm	Approx. Weight (Each) lb kg	C to E inches mm	Approx. Weight (Each) lb kg	C to E inches mm	Approx. Weight (Each) lb kg
14[1] DN350	x	14 DN350	x	4 DN100	14.000 355.6	x	14.000 355.6	x	4.500 114.3	11.00 (sw) 279	102.0 46.3	11.00 (sw) 279	102.0 46.3	NA	NA
				6 DN150					6.625 168.3	11.00 (sw) 279	108.2 49.1	11.00 (sw) 279	108.2 49.1	NA	NA
				8 DN200					8.625 219.1	11.00 (sw) 279	112.0 50.8	11.00 (sw) 279	112.0 50.8	NA	NA
				10 DN250					10.750 273.0	11.00 (sw) 279	120.0 54.4	11.00 (sw) 279	120.0 54.4	NA	NA
				12 DN300					12.750 323.9	11.00 (sw) 279	129.1 58.6	11.00 (sw) 279	129.1 58.6	NA	NA
					14.843 377.0		14.843 377.0		6.500 165.1	11.00 279	142.4 64.6	NA	NA	NA	NA
									8.625 219.1	11.00 279	145.5 66.0	NA	NA	NA	NA
									10.750 273.0	11.00 279	149.9 68.0	NA	NA	NA	NA
									12.750 323.9	11.00 279	144.6 65.6	NA	NA	NA	NA
16[1] DN400	x	16 DN400	x	4 DN100	16 DN400	x	16 DN400	x	4.500 114.3	12.00 (sw) 305	130.0 59.0	12.00 (sw) 305	130.0 59.0	NA	NA
				6 DN150					6.625 168.3	12.00 (sw) 305	133.5 60.6	12.00 (sw) 305	133.5 60.6	NA	NA
				8 DN200					8.625 219.1	12.00 (sw) 305	145.0 65.8	12.00 (sw) 305	145.0 65.8	NA	NA
				10 DN250					10.750 273.0	12.00 (sw) 305	149.5 67.8	12.00 (sw) 305	149.5 67.8	NA	NA
				12 DN300					12.750 323.9	12.00 (sw) 305	154.0 69.9	12.00 (sw) 305	154.0 69.9	NA	NA
				14 DN350					14.000 355.6	12.00 (sw) 305	167.0 75.7	NA	NA	NA	NA
					16.772 426.0	x	16.772 426.0	x	6.250 159.0	12.83 326	189.6 86.0	NA	NA	NA	NA
									8.625 219.1	12.83 326	213.9 97.0	NA	NA	NA	NA
									10.750 273.0	12.83 326	224.9 102.0	NA	NA	NA	NA
									12.750 323.9	12.83 326	224.9 102.0	NA	NA	NA	NA
									14.843 377.0	12.83 326	227.1 103.0	NA	NA	NA	NA

[1] For 14"/DN350 and larger roll grooved systems for carbon steel pipe, Victaulic offers fittings for the Advanced Groove System (AGS). Refer to publication 20.05 for more information. For pricing and availability of cut groove fittings in this size, contact your nearest Victaulic sales representative.

[2] Available with British Standard Pipe Threads, specify "BSP" clearly on order.

(sw) = Carbon Steel Segmentally Welded

NA = Not Available

"+" = Contact Victaulic for details

NOTES

- All fittings are ductile iron unless otherwise noted with an (sw).

4.4 DIMENSIONS (CONTINUED)

Reducing Tee

No. 25
No. 29T
No. 29F

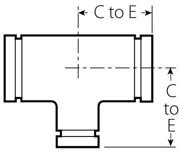

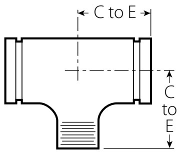

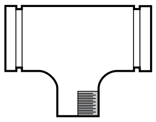

Size		No. 25 Grooved Branch Reducing Tee		No. 29T Reducing Tee Groove x Male Thread[2] Branch		No. 29F[2] Reducing Tee Groove x Female Thread[2] Branch	
Nominal inches DN	**Actual Outside Diameter** inches mm	**C to E** inches mm	**Approx. Weight (Each)** lb kg	**C to E** inches mm	**Approx. Weight (Each)** lb kg	**C to E** inches mm	**Approx. Weight (Each)** lb kg
18[1] x 18 x 4 DN450 DN450 DN100	18.000 x 18.000 x 4.500 457.2 457.2 114.3	15.50 (sw) 394	194.0 88.0	15.50 (sw) 394	194.0 88.0	NA	NA
6 DN150	6.625 168.3	15.50 (sw) 394	200.0 90.7	15.50 (sw) 394	200.0 90.7	NA	NA
8 DN200	8.625 219.1	15.50 (sw) 394	202.6 91.9	15.50 (sw) 394	202.0 91.6	NA	NA
10 DN250	10.750 273.0	15.50 (sw) 394	212.0 96.2	15.50 (sw) 394	212.0 96.2	NA	NA
12 DN300	12.750 323.9	15.50 (sw) 394	222.6 101.0	15.50 (sw) 394	222.6 101.0	NA	NA
14 DN350	14.000 355.6	15.50 (sw) 394	230.1 104.4	NA	NA	NA	NA
16 DN400	16 DN400	15.50 (sw) 394	247.6 112.3	NA	NA	NA	NA
	18.898 x 18.898 x 4.250 480.0 480.0 108.0	14.75 375	282.4 128.1	NA	NA	NA	NA
	5.250 133.0	14.75 375	283.0 128.4	NA	NA	NA	NA
	6.250 159.0	14.75 375	283.3 128.5	NA	NA	NA	NA
	10.750 273.0	14.75 375	285.1 129.3	NA	NA	NA	NA
	14.843 377.0	14.75 375	293.8 133.2	NA	NA	NA	NA

[1] For 14"/DN350 and larger roll grooved systems for carbon steel pipe, Victaulic offers fittings for the Advanced Groove System (AGS). Refer to publication 20.05 for more information. For pricing and availability of cut groove fittings in this size, contact your nearest Victaulic sales representative.

[2] Available with British Standard Pipe Threads, specify "BSP" clearly on order.

(sw) = Carbon Steel Segmentally Welded

NA = Not Available

"+" = Contact Victaulic for details

NOTES

- All fittings are ductile iron unless otherwise noted with an (sw).

4.4 DIMENSIONS (CONTINUED)

Reducing Tee

No. 25
No. 29T
No. 29F

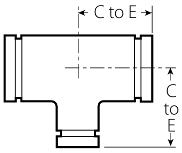

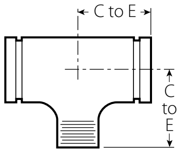

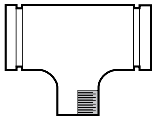

Size		No. 25 Grooved Branch Reducing Tee		No. 29T Reducing Tee Groove x Male Thread[2] Branch		No. 29F[2] Reducing Tee Groove x Female Thread[2] Branch	
Nominal inches DN	**Actual Outside Diameter** inches mm	**C to E** inches mm	**Approx. Weight (Each)** lb kg	**C to E** inches mm	**Approx. Weight (Each)** lb kg	**C to E** inches mm	**Approx. Weight (Each)** lb kg
20[1] x 20 x 6 DN500 DN500 DN150	20.000 x 20.000 x 6.625 508.0 508.0 168.3	17.25 (sw) 438	240.0 108.9	17.25 (sw) 438	240.0 108.9	NA	NA
8 DN200	8.625 219.1	17.25 (sw) 438	244.0 110.7	17.25 (sw) 438	244.0 110.7	NA	NA
10 DN250	10.750 273.0	17.25 (sw) 438	256.0 116.1	17.25 (sw) 438	256.0 116.1	NA	NA
12 DN300	12.750 323.9	17.25 (sw) 438	264.3 119.9	17.25 (sw) 438	264.0 119.7	NA	NA
14 DN350	14.000 355.6	17.25 (sw) 438	275.0 124.7	NA	NA	NA	NA
16 DN400	16.000 406.4	17.25 (sw) 438	288.6 130.9	NA	NA	NA	NA
18 DN450	18.000 457.2	17.25 (sw) 438	297.0 134.7	NA	NA	NA	NA
	20.866 x 20.866 x 6.250 530.0 530.0 159.0	17.25 438	368.2 167.0	NA	NA	NA	NA
	8.625 219.1	17.25 438	401.3 182.0	NA	NA	NA	NA
	10.750 273.0	17.25 438	379.2 172.0	NA	NA	NA	NA
	12.750 323.9	17.25 438	401.2 182.0	NA	NA	NA	NA
	14.843 377.0	17.25 438	383.6 174.0	NA	NA	NA	NA
	16.772 426.0	17.25 438	401.2 182.0	NA	NA	NA	NA
	18.898 480.0	17.25 438	399.2 181.1	NA	NA	NA	NA

[1] For 14"/DN350 and larger roll grooved systems for carbon steel pipe, Victaulic offers fittings for the Advanced Groove System (AGS). Refer to publication 20.05 for more information. For pricing and availability of cut groove fittings in this size, contact your nearest Victaulic sales representative.

[2] Available with British Standard Pipe Threads, specify "BSP" clearly on order.

(sw) = Carbon Steel Segmentally Welded

NA = Not Available

"+" = Contact Victaulic for details

NOTES

- All fittings are ductile iron unless otherwise noted with an (sw).

4.4 DIMENSIONS (CONTINUED)

Reducing Tee

No. 25
No. 29T
No. 29F

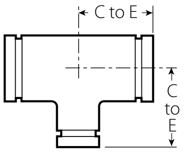

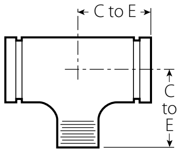

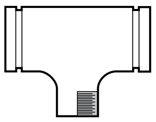

Size										No. 25 Grooved Branch Reducing Tee		No. 29T Reducing Tee Groove x Male Thread[2] Branch		No. 29F[2] Reducing Tee Groove x Female Thread[2] Branch	
Nominal inches DN					Actual Outside Diameter inches mm					C to E inches mm	Approx. Weight (Each) lb kg	C to E inches mm	Approx. Weight (Each) lb kg	C to E inches mm	Approx. Weight (Each) lb kg
24[1] DN600	x	24 DN600	x	8 DN200	24.000 609.6	x	24.000 609.6	x	8.625 219.1	20.00 (sw) 508	340.0 154.2	20.00 (sw) 508	340.0 154.2	NA	NA
				10 DN250					10.750 273.0	20.00 (sw) 508	343.9 156.0	20.00 (sw) 508	343.9 156.0	NA	NA
				12 DN300					12.750 323.9	20.00 (sw) 508	352.8 160.0	20.00 (sw) 508	352.8 160.0	NA	NA
				14 DN350					14.000 355.6	20.00 508	+	NA	NA	NA	NA
				16 DN400					16.000 406.4	20.00 (sw) 508	378.0 171.5	NA	NA	NA	NA
				18 DN450					18.000 457.2	20.00 508	+	NA	NA	NA	NA
				20 DN500					20.000 508.0	20.00 (sw) 508	400.0 181.4	NA	NA	NA	NA
					24.803 630.0	x	24.803 630.0	x	6.250 159.0	20.00 508	559.2 253.6	NA	NA	NA	NA
									8.625 219.1	20.00 508	559.2 253.6	NA	NA	NA	NA
									10.750 273.0	20.00 508	562.2 255.0	NA	NA	NA	NA
									12.750 323.9	20.00 508	562.2 255.0	NA	NA	NA	NA
									14.843 377.0	20.00 508	586.4 266.0	NA	NA	NA	NA
									16.772 426.0	20.00 508	579.8 263.0	NA	NA	NA	NA
									18.898 480.0	20.00 508	568.8 258.0	NA	NA	NA	NA
									20.866 530.0	20.00 508	574.3 260.5	NA	NA	NA	NA
14 – 60 DN350 – DN1500					For AGS fitting information, see publication 20.05 AGS™										

[1] For 14"/DN350 and larger roll grooved systems for carbon steel pipe, Victaulic offers fittings for the Advanced Groove System (AGS). Refer to publication 20.05 for more information. For pricing and availability of cut groove fittings in this size, contact your nearest Victaulic sales representative.

[2] Available with British Standard Pipe Threads, specify "BSP" clearly on order.

(sw) = Carbon Steel Segmentally Welded

NA = Not Available

"+" = Contact Victaulic for details

NOTES

- All fittings are ductile iron unless otherwise noted with an (sw).

4.5 DIMENSIONS (CONTINUED)

Pitcher Tee

No. 29P

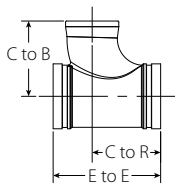

Size										No. 29P Pitcher Tee Groove x Female Thread Branch			
Nominal inches DN					Actual Outside Diameter inches mm					C to R inches mm	E to E inches mm	C to B inches mm	Approx. Weight (Each) lb kg
4	x	4	x	2½	4.500	x	4.500	x	2.875	4.75	7.50	5.25	10.1
DN100		DN100			114.3		114.3		73.0	121	191	133	4.6

NOTE

- All fittings are ductile iron unless otherwise noted with an (sw).

4.6 DIMENSIONS

45° Lateral

No. 30

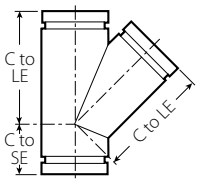

Size		No. 30 45° Lateral		
Nominal inches DN	**Actual Outside Diameter** inches mm	**C to LE** inches mm	**C to SE** inches mm	**Approx. Weight (Each)** lb kg
¾ DN20	1.050 26.9	4.50 (sw) 114	2.00 (sw) 51	0.9 0.4
1 DN25	1.315 33.7	5.00 (sw) 127	2.25 (sw) 57	1.7 0.8
1 ¼ DN32	1.660 42.4	5.75 (sw) 146	2.50 (sw) 64	2.5 1.1
1 ½ DN40	1.900 48.3	6.25 (sw) 159	2.75 (sw) 70	3.5 1.6
2 DN50	2.375 60.3	7.00 (sw) 178	2.75 (sw) 70	5.1 2.3
2 ½	2.875 73.0	7.75 (sw) 197	3.00 (sw) 76	9.0 4.1
DN65	3.000 76.1	8.50 (sw) 216	3.25 (sw) 83	9.8 4.4
3 DN80	3.500 88.9	8.50 216	3.25 83	10.3 4.6
3 ½ DN90	4.000 101.6	10.00 (sw) 254	3.50 (sw) 89	22.0 10.0
	4.250 108.0	10.50 (sw) 267	3.75 (sw) 95	22.1 10.0
4 DN100	4.500 114.3	10.50 267	3.75 95	17.9 8.1
4 ½	5.000 127.0	12.50 (sw) 318	4.00 (sw) 102	23.8 10.8
	5.250 133.0	12.50 (sw) 318	4.00 (sw) 102	25.3 11.5
DN125	5.500 139.7	12.50 (sw) 318	4.00 (sw) 102	26.8 12.1
5	5.563 141.3	12.50 (sw) 318	4.00 (sw) 102	29.8 13.5
	6.000 152.4	14.00 (sw) 356	4.50 (sw) 114	33.8 15.3
	6.250 159.0	14.00 (sw) 356	4.50 (sw) 114	36.8 16.7
	6.500 165.1	14.00 (sw) 356	4.50 (sw) 114	43.6 19.8
6 DN150	6.625 168.3	14.00 356	4.50 114	43.6 19.8

[1] For 14"/DN350 and larger roll grooved systems for carbon steel pipe, Victaulic offers fittings for the Advanced Groove System (AGS). Refer to publication 20.05 for more information. For pricing and availability of cut groove fittings in this size, contact your nearest Victaulic sales representative.

(sw) = Carbon Steel Segmentally Welded

NOTE

- All fittings are ductile iron unless otherwise noted with an (sw).

4.6 DIMENSIONS (CONTINUED)

45º Lateral

No. 30

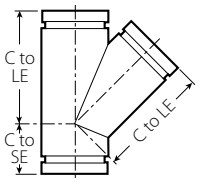

Size		No. 30 45° Lateral		
Nominal inches DN	**Actual Outside Diameter** inches mm	**C to LE** inches mm	**C to SE** inches mm	**Approx. Weight (Each)** lb kg
8 DN200	8.625 219.1	18.00 (sw) 457	6.00 (sw) 152	73.0 33.1
10 DN250	10.750 273.0	20.50 (sw) 521	6.50 (sw) 165	105.0 47.6
12 DN300	12.750 323.9	23.00 (sw) 584	7.00 (sw) 178	165.0 74.8
14[1] DN350	14.000 355.6	26.50 (sw) 673	7.50 (sw) 191	276.0 125.2
16[1] DN400	16.000 406.4	29.00 (sw) 737	8.00 (sw) 203	344.2 156.1
18[1] DN450	18.000 457.2	32.00 (sw) 813	8.50 (sw) 216	429.0 194.6
20[1] DN500	20.000 508.0	35.00 (sw) 889	9.00 (sw) 229	500.0 226.8
22[1] DN550	22.000 558.8	38.00 (sw) 965	9.50 (sw) 241	610.0 276.7
24[1] DN600	24.000 609.6	40.00 (sw) 1016	10.00 (sw) 254	715.0 324.3

[1] For 14"/DN350 and larger roll grooved systems for carbon steel pipe, Victaulic offers fittings for the Advanced Groove System (AGS). Refer to publication 20.05 for more information. For pricing and availability of cut groove fittings in this size, contact your nearest Victaulic sales representative.

(sw) = Carbon Steel Segmentally Welded

NOTE

- All fittings are ductile iron unless otherwise noted with an (sw).

4.7 DIMENSIONS

45° Reducing Lateral

No. 30-R SWS

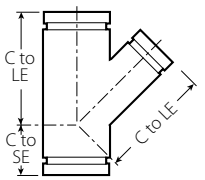

Size										No. 30-R SWS 45° Reducing Lateral (sw)		
Nominal inches DN					Actual Outside Diameter inches DN					C to LE inches mm	C to SE inches mm	Approx. Weight (Each) lb kg
3 DN80	x	3 DN80	x	2 DN50	3.500 88.9	x	3.500 88.9	x	2.375 60.3	8.50 216	3.25 83	9.8 4.4
				2½					2.875 73.0	8.50 216	3.25 83	9.8 4.4
4 DN100	x	4 DN100	x	2 DN50	4.500 114.3	x	4.500 114.3	x	2.375 60.3	10.50 267	3.75 95	10.0 4.5
				2½					2.875 73.0	10.50 267	3.75 95	10.0 4.5
				3 DN80					3.500 88.9	10.50 267	3.75 95	18.3 8.3
5	x	5	x	2 DN50	5	x	5	x	2.375 60.3	12.50 318	4.00 102	24.0 10.9
				3 DN80					3.500 88.9	12.50 318	4.00 102	27.0 12.2
				4 DN100					4.500 114.3	12.50 318	4.00 102	26.5 12.0
6 DN150	x	6 DN150	x	3 DN80	6.625 168.3	x	6.625 168.3	x	3.500 88.9	14.00 356	4.50 114	37.0 16.8
				4 DN100					4.500 114.3	14.00 356	4.50 114	36.0 16.3
				5					5.563 141.3	14.00 356	4.50 114	44.7 20.3
8 DN200	x	8 DN200	x	3 DN80	8.625 219.1	x	8.625 219.1	x	3.500 88.9	18.00 457	6.00 152	58.0 26.3
				4 DN100					4.500 114.3	18.00 457	6.00 152	62.0 28.1
				5					5.563 141.3	18.00 457	6.00 152	75.5 34.2
				6 DN150					6.625 168.3	18.00 457	6.00 152	82.0 37.2
10 DN250	x	10 DN250	x	4 DN100	10.750 273.0	x	10.750 273.0	x	4.500 114.3	20.50 521	6.50 165	104.8 47.5
				5					5.563 141.3	20.50 521	6.50 165	105.0 47.6
				6 DN150					6.625 168.3	20.50 521	6.50 165	105.8 48.0
				8 DN200					8.625 219.1	20.50 521	6.50 165	118.0 53.5
12 DN300	x	12 DN300	x	4 DN100	12.750 323.9	x	12.750 323.9	x	4.500 114.3	23.00 584	7.00 178	135.0 61.2
				5					5.563 141.3	23.00 584	7.00 178	122.0 55.3
				6 DN150					6.625 168.3	23.00 584	7.00 178	137.0 62.1
				8 DN200					8.625 219.1	23.00 584	7.00 178	147.0 66.7
				10 DN250					10.750 273.0	23.00 584	7.00 178	167.0 75.7

[1] For 14"/DN350 and larger roll grooved systems for carbon steel pipe, Victaulic offers fittings for the Advanced Groove System (AGS). Refer to publication 20.05 for more information. For pricing and availability of cut groove fittings in this size, contact your nearest Victaulic sales representative.

(sw) = Carbon Steel Segmentally Welded

4.7 DIMENSIONS (CONTINUED)

45° Reducing Lateral

No. 30-R SWS

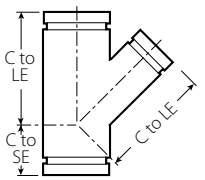

Size										No. 30-R SWS 45° Reducing Lateral (sw)		
Nominal inches DN					Actual Outside Diameter inches DN					C to LE inches mm	C to SE inches mm	Approx. Weight (Each) lb kg
14[1] DN350	x	14 DN350	x	4 DN100	14.000 355.6	x	14.000 355.6	x	4.500 114.3	26.50 673	7.50 191	176.0 79.8
				6 DN150					6.625 168.3	26.50 673	7.50 191	187.0 84.8
				8 DN200					8.625 219.1	26.50 673	7.50 191	210.0 95.3
				10 DN250					10.750 273.0	26.50 673	7.50 191	235.0 106.6
				12 DN300					12.750 323.9	26.50 673	7.50 191	252.0 114.3
16[1] DN400	x	16 DN400	x	6 DN150	16.000 406.4	x	16.000 406.4	x	6.625 168.3	29.00 737	8.00 203	215.0 97.5
				8 DN200					8.625 219.1	29.00 737	8.00 203	252.5 114.5
				10 DN250					10.750 273.0	29.00 737	8.00 203	265.0 120.2
				12 DN300					12.750 323.9	29.00 737	8.00 203	295.0 133.8
				14 DN350					16.000 406.4	29.00 737	8.00 203	305.0 138.3
18[1] DN450	x	18 DN450	x	6 DN150	18.000 457.2	x	18.000 457.2	x	6.625 168.3	32.00 813	8.50 216	274.0 124.3
				8 DN200					8.625 219.1	32.00 813	8.50 216	275.0 124.7
				10 DN250					10.750 273.0	32.00 813	8.50 216	285.0 129.3
				12 DN300					12.750 323.9	32.00 813	8.50 216	347.0 157.4
				14 DN350					14.000 355.6	32.00 813	8.50 216	350.0 158.8
				16 DN400					16.000 406.4	32.00 813	8.50 216	362.0 164.2
20[1] DN500	x	20 DN500	x	10 DN250	20.000 508.0	x	20.000 508.0	x	10.750 273.0	35.00 889	9.00 229	410.0 186.0
				12 DN300					12.750 323.9	35.00 889	9.00 229	415.0 188.2
				14 DN350					14.000 355.6	35.00 889	9.00 229	420.0 190.5
				16 DN400					16.000 406.4	35.00 889	9.00 229	425.0 192.8
24[1] DN600	x	24 DN600	x	16 DN400	24.000 609.6	x	24.000 609.6	x	16.000 406.4	40.00 1016	10.00 254	556.0 252.2
				20 DN500					20.000 508.0	40.00 1016	10.00 254	715.0 324.3
14 – 60 DN350 – DN1500					For AGS fitting information, see publication 20.05 AGS™							

[1] For 14"/DN350 and larger roll grooved systems for carbon steel pipe, Victaulic offers fittings for the Advanced Groove System (AGS). Refer to publication 20.05 for more information. For pricing and availability of cut groove fittings in this size, contact your nearest Victaulic sales representative.

(sw) = Carbon Steel Segmentally Welded

4.8 DIMENSIONS

Tee Wye

No. 32

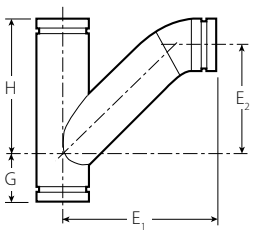

Size										No. 32 Tee Wye (sw)				
Nominal inches DN					Actual Outside Diameter inches mm					G inches mm	H inches mm	E1 inches mm	E2 inches mm	Approx. Weight (Each) lb kg
2 DN50	x	2 DN50	x	2 DN50	2.375 60.3	x	2.375 60.3	x	2.375 60.3	2.75 70	7.00 178	9.00 229	4.63 117	6.4 2.9
2½	x	2½	x	2½	2.875 73.0	x	2.875 73.0	x	2.875 73.0	3.00 76	7.75 197	10.50 267	5.75 146	11.5 5.2
3 DN80	x	3 DN80	x	2 DN50	3.500 88.9	x	3.500 88.9	x	2.375 60.3	3.25 83	8.50 216	10.38 264	6.00 152	12.5 5.7
				3 DN80					3.500 88.9	3.25 83	8.50 216	11.50 292	6.50 165	14.3 6.5
3½ DN90	x	3½ DN90	x	3½ DN90	4.000 101.6	x	4.000 101.6	x	4.000 101.6	3.25 83	10.00 254	13.00 330	7.75 197	15.0 6.8
4 DN100	x	4 DN100	x	1 DN25	4.500 114.3	x	4.500 114.3	x	1.315 33.7	3.75 95	10.50 267	12.25 311	8.38 213	17.0 7.7
				2 DN50					2.375 60.3	3.75 95	10.50 267	11.88 302	7.50 191	20.0 9.1
				3 DN80					3.500 88.9	3.75 95	10.50 267	12.88 327	7.88 200	23.0 10.4
				4 DN100					4.500 114.3	3.75 95	10.00 254	13.63 346	8.13 206	26.0 11.8
5	x	5	x	2 DN50	5.563 141.3	x	5.563 141.3	x	2.375 60.3	4.00 102	12.50 318	13.13 333	8.75 222	29.0 13.2
				3 DN80					3.500 88.9	4.00 102	12.50 318	14.25 362	9.25 235	31.5 14.3
				4 DN100					4.500 114.3	4.00 102	12.50 318	15.13 384	9.63 244	36.7 16.6
				5					5.563 141.3	4.00 102	12.50 318	16.13 410	10.00 254	48.0 21.8
6 DN150	x	6 DN150	x	2 DN50	6.625 168.3	x	6.625 168.3	x	2.375 60.3	4.50 114	14.00 356	14.13 359	9.75 248	29.0 13.2
				3 DN80					3.500 88.9	4.50 114	14.00 356	15.31 389	10.31 262	37.3 16.9
				4 DN100					4.500 114.3	4.50 114	14.00 356	16.25 413	10.75 273	46.3 21.0
				5					5.563 141.3	4.50 114	14.00 356	17.25 438	11.13 283	55.0 25.0
				6 DN150					6.625 168.3	4.50 114	14.00 356	18.25 464	11.50 292	60.5 27.4
8 DN200	x	8 DN200	x	2 DN50	8.625 219.1	x	8.625 219.1	x	2.375 60.3	6.00 152	18.00 457	17.00 432	12.63 321	70.0 31.8
				3 DN80					3.500 88.9	6.00 152	18.00 457	18.19 462	13.19 335	76.0 34.5
				4 DN100					4.500 114.3	6.00 152	18.00 457	19.00 483	13.50 343	76.4 34.6
				5					5.563 141.3	6.00 152	18.00 457	20.00 508	13.88 352	85.6 38.8
				6 DN150					6.625 168.3	6.00 152	18.00 457	21.13 537	14.38 365	112.0 50.8
				8 DN200					8.625 219.1	6.00 152	18.00 457	23.25 591	15.25 387	127.9 58.0

(sw) = Carbon Steel Segmentally Welded

4.8 DIMENSIONS

Tee Wye

No. 32

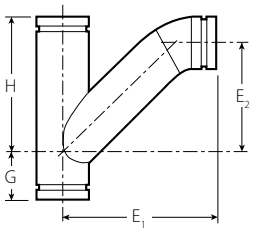

Size									No. 32 Tee Wye (sw)				
Nominal inches DN					Actual Outside Diameter inches mm				G inches mm	H inches mm	E1 inches mm	E2 inches mm	Approx. Weight (Each) lb kg
10 DN250	x	10 DN250	x	2 DN50	10.750 273.0	x	10.750 273.0	x	2.375 60.3	6.50 165	20.50 521	18.75 476	14.38 365	90.0 40.8
				3 DN80					3.500 88.9	6.50 165	20.50 521	19.88 505	14.88 378	96.0 43.5
				4 DN100					4.500 114.3	6.50 165	20.50 521	20.75 527	15.25 387	97.4 44.2
				5					5.563 141.3	6.50 165	20.50 521	21.88 556	15.75 400	115.0 52.2
				6 DN150					6.625 168.3	6.50 165	20.50 521	22.88 581	16.13 410	133.1 60.4
				8 DN200					8.625 219.1	6.50 165	20.50 521	27.25 692	19.25 489	156.0 70.8
				10 DN250					10.750 273.0	6.50 165	20.50 521	27.25 692	18.00 457	190.0 86.2
12 DN300	x	12 DN300	x	2 DN50	12.750 323.9	x	12.750 323.9	x	2.375 60.3	7.00 178	23.00 584	20.75 527	16.38 416	120.0 54.4
				3 DN80					3.500 88.9	7.00 178	23.00 584	21.75 552	16.75 425	125.0 56.7
				4 DN100					4.500 114.3	7.00 178	23.00 584	22.63 575	17.13 435	127.0 57.6
				5					5.563 141.3	7.00 178	23.00 584	23.63 600	17.50 445	143.0 64.9
				6 DN150					6.625 168.3	7.00 178	23.00 584	24.78 629	18.03 458	165.0 74.8
				8 DN200					8.625 219.1	7.00 178	23.00 584	26.92 684	18.92 481	176.0 79.8
				10 DN250					10.750 273.0	7.00 178	23.00 584	29.00 737	19.75 502	200.0 90.7
				12 DN300					12.750 323.9	7.00 178	23.00 584	31.00 787	20.50 521	240.0 108.9

(sw) = Carbon Steel Segmentally Welded

4.9 DIMENSIONS

Adapter Nipple

No. 40
No. 42
No. 43

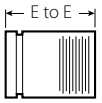

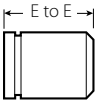

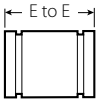

Size		No. 40 Adapter Nipple Groove x Male Thread[2] (s)		No. 42 Adapter Nipple Groove x Bevel (s)		No. 43 Adapter Nipple Groove x Groove (s)	
Nominal inches DN	Actual Outside Diameter inches mm	E to E inches mm	Approx. Weight (Each) lb kg	E to E inches mm	Approx. Weight (Each) lb kg	E to E inches mm	Approx. Weight (Each) lb kg
¾ DN20	1.050 26.9	3.00 76	0.3 0.1	3.00 76	0.3 0.1	3.00 76	0.3 0.1
1 DN25	1.315 33.7	3.00 76	0.4 0.2	3.00 76	0.4 0.2	3.00 76	0.4 0.2
1 ¼ DN32	1.660 42.4	4.00 102	0.8 0.3	4.00 102	0.8 0.3	4.00 102	0.8 0.3
1 ½ DN40	1.900 48.3	4.00 102	0.9 0.4	4.00 102	0.9 0.4	4.00 102	0.9 0.4
2 DN50	2.375 60.3	4.00 102	1.2 0.6	4.00 102	1.2 0.6	4.00 102	1.2 0.6
2 ½	2.875 73.0	4.00 102	1.9 0.9	4.00 102	1.9 0.9	4.00 102	1.9 0.9
DN65	3.000 76.1	4.00 102	2.0 0.9	4.00 102	2.0 0.9	4.00 102	2.0 0.9
3 DN80	3.500 88.9	4.00 102	2.5 1.1	4.00 102	2.5 1.1	4.00 102	2.5 1.1
3 ½ DN90	4.000 101.6	4.00 102	3.0 1.4	4.00 102	3.0 1.4	4.00 102	3.0 1.4
	4.250 108.0	6.00 152	4.9 2.2	6.00 152	4.9 2.2	6.00 152	4.9 2.2
4 DN100	4.500 114.3	6.00 152	5.4 2.5	6.00 152	5.4 2.5	6.00 152	5.4 2.5
4 ½	5.000 127.0	6.00 152	6.3 2.8	6.00 152	6.3 2.8	6.00 152	6.3 2.8
	5.250 133.0	6.00 152	6.9 3.1	6.00 152	6.9 3.1	6.00 152	6.9 3.1
DN125	5.500 139.7	6.00 152	7.2 3.3	6.00 152	7.2 3.3	6.00 152	7.2 3.3
5	5.563 141.3	6.00 152	7.3 3.3	6.00 152	7.3 3.3	6.00 152	7.3 3.3
	6.000 152.4	6.00 152	8.6 3.9	6.00 152	8.6 3.9	6.00 152	8.6 3.9
	6.250 159.0	6.00 152	9.0 4.1	6.00 152	9.0 4.1	6.00 152	9.0 4.1
	6.500 165.1	6.00 152	9.3 4.2	6.00 152	9.3 4.2	6.00 152	9.3 4.2
6 DN150	6.625 168.3	6.00 152	9.5 4.3	6.00 152	9.5 4.3	6.00 152	9.5 4.3
8 DN200	8.625 219.1	6.00 152	14.3 6.5	6.00 152	14.3 6.5	6.00 152	14.3 6.5
10 DN250	10.750 273.0	8.00 203	22.8 10.3	8.00 203	22.8 10.3	8.00 203	22.8 10.3
12 DN300	12.750 323.9	8.00 203	33.1 15.0	8.00 203	33.1 15.0	8.00 203	33.1 15.0

[1] For 14"/DN350 and larger roll grooved systems for carbon steel pipe, Victaulic offers fittings for the Advanced Groove System (AGS). Refer to publication 20.05 for more information. For pricing and availability of cut groove fittings in this size, contact your nearest Victaulic sales representative.

[2] Available with British Standard Pipe Threads, specify "BSP" clearly on order.

(s) = Carbon Steel Segmentally Welded

NOTE

- For pump package nipples with 1 ½"/40mm hole cut to receive Style 923 Vic-Let or Style 924 Vic-O-Well request special No. 40, 42 or 43 nipples and specify No. 40-H, 42-H or 43-H on order. Note: 4 – 12"/DN100 – N300 diameter – 8"/200mm length required.

4.9 DIMENSIONS (CONTINUED)

Adapter Nipple

No. 40
No. 42
No. 43

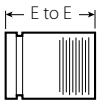

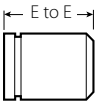

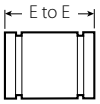

Size		No. 40 Adapter Nipple Groove x Male Thread[2] (s)		No. 42 Adapter Nipple Groove x Bevel (s)		No. 43 Adapter Nipple Groove x Groove (s)	
Nominal inches DN	**Actual Outside Diameter** inches mm	**E to E** inches mm	**Approx. Weight (Each)** lb kg	**E to E** inches mm	**Approx. Weight (Each)** lb kg	**E to E** inches mm	**Approx. Weight (Each)** lb kg
14[1] DN350	14.000 355.6	8.00 203	36.5 16.5	8.00 203	36.5 16.5	8.00 203	36.5 16.5
16[1] DN400	16.000 406.4	8.00 203	41.8 19.0	8.00 203	41.8 19.0	8.00 203	41.8 19.0
18[1] DN450	18.000 457.2	8.00 203	47.2 21.4	8.00 203	47.2 21.4	8.00 203	47.2 21.4
20[1] DN500	20.000 508.0	8.00 203	52.5 23.8	8.00 203	52.5 23.8	8.00 203	52.5 23.8
22[1] DN550	22.000 558.8	8.00 203	57.9 26.3	8.00 203	57.9 26.3	8.00 203	57.9 26.3
24[1] DN600	24.000 609.6	8.00 203	63.2 28.7	8.00 203	63.2 28.7	8.00 203	63.2 28.7
14 – 60 DN350 – DN1500	For AGS fitting information, see publication 20.05 AGS™						

1 For 14"/DN350 and larger roll grooved systems for carbon steel pipe, Victaulic offers fittings for the Advanced Groove System (AGS). Refer to publication 20.05 for more information. For pricing and availability of cut groove fittings in this size, contact your nearest Victaulic sales representative.

2 Available with British Standard Pipe Threads, specify "BSP" clearly on order.

(s) = Carbon Steel Segmentally Welded

NOTE

- For pump package nipples with 1 ½"/40mm hole cut to receive Style 923 Vic-Let or Style 924 Vic-O-Well request special No. 40, 42 or 43 nipples and specify No. 40-H, 42-H or 43-H on order. Note: 4 – 12"/DN100 – N300 diameter – 8"/200mm length required.

4.10 DIMENSIONS

Cap
No. 60

Bull Plug
No. 61

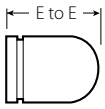

Size		No. 60 Cap		No. 61 Bull Plug (s)	
Nominal inches DN	**Actual Outside Diameter** inches mm	**T** inches mm	**Approx. Weight (Each)** lb kg	**E to E** inches mm	**Approx. Weight (Each)** lb kg
¾ DN20	1.050 26.9	0.91 (s) 23	0.2 0.1	NA	NA
1 DN25	1.315 33.7	0.79 20	0.2 0.1	NA	NA
1 ¼ DN32	1.660 42.4	0.79 20	0.4 0.2	NA	NA
1 ½ DN40	1.900 48.3	0.79 20	0.4 0.2	NA	NA
2 DN50	2.375 60.3	0.88 22	0.7 0.3	4.00 102	2.6 1.2
2 ½	2.875 73.0	0.88 22	1.2 0.5	5.00 127	3.0 1.4
DN65	3.000 76.1	0.88 22	1.2 0.5	NA	NA
3 DN80	3.500 88.9	0.88 22	1.7 0.7	6.00 152	4.5 2.0
3 ½ DN90	4.000 101.6	0.88 22	1.9 0.9	NA	NA
	4.250 108.0	0.92 23	2.6 1.2	NA	NA
4 DN100	4.500 114.3	0.92 23	3.1 1.4	7.00 178	7.5 3.4
4 ½	5.000 127.0	1.00 (s) 25	5.4 2.4	NA	NA
	5.250 133.0	0.92 23	3.9 1.8	NA	NA
DN125	5.500 139.7	0.92 23	4.5 2.0	NA	NA
5	5.563 141.3	0.92 23	4.9 2.2	8.00 203	11.5 5.2
	6.250 159.0	0.92 23	5.7 2.6	NA	NA
	6.500 165.1	0.92 23	6.2 2.8	NA	NA
6 DN150	6.625 168.3	0.92 23	6.4 2.9	10.00 254	18.0 8.2
200A	216.3	1.13 29	17.4 7.9	NA	NA

[1] For 14"/DN350 and larger roll grooved systems, Victaulic offers the Advanced Groove System (AGS). For pricing and availability of cut groove fittings in this size, contact your nearest Victaulic sales representative.

(s) = Carbon Steel

NA = Not Available

"+" = Contact Victaulic for details

NOTES

- All fittings are ductile iron unless otherwise noted with an (s).
- No. 60 cap is not suitable for use in vacuum service with Style 72 or Style 750 couplings. No. 61 bull plugs should be used.
- Steel dish caps available through 24"/DN600, contact Victaulic.
- No. 60 Caps are available with taps. Tap sizes range from ½" up to 4" maximum, depending on the diameter of the cap, and can be provided centered or offset to suit the application. Contact Victaulic for pricing and availability. All tapped caps are non-cancellable and non-returnable.

4.10 DIMENSIONS

Cap
No. 60

Bull Plug
No. 61

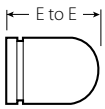

Size		No. 60 Cap		No. 61 Bull Plug (s)	
Nominal inches DN	**Actual Outside Diameter** inches mm	**T** inches mm	**Approx. Weight (Each)** lb kg	**E to E** inches mm	**Approx. Weight (Each)** lb kg
8 DN200	8.625 219.1	1.13 29	13.6 6.2	12.00 305	29.0 13.2
10 DN250	10.750 273.0	1.13 29	23.6 10.7	10.00 254	39.0 17.7
12 DN300	12.750 323.9	1.25 32	38.5 17.5	NA	NA
14[1] DN350	14.000 355.6	9.50 (s) 241	42.0 19.1	NA	NA
16[1] DN400	16.000 406.4	10.00 (s) 254	45.0 20.4	NA	NA
18[1] DN450	18.000 457.2	11.00 (s) 279	58.0 26.3	NA	NA
20[1] DN500	20.000 508.0	12.00 (s) 305	67.5 30.6	NA	NA
22[1] DN550	22.000 558.8	13.00 (s) 330	+	NA	NA
24[1] DN600	24.000 609.6	13.50 (s) 343	105.0 47.6	NA	NA
14 – 60 DN350 – DN1500	For AGS fitting information, see publication 20.05 AGS™				

[1] For 14"/DN350 and larger roll grooved systems, Victaulic offers the Advanced Groove System (AGS). For pricing and availability of cut groove fittings in this size, contact your nearest Victaulic sales representative.

(s) = Carbon Steel

NA = Not Available

"+" = Contact Victaulic for details

NOTES

- All fittings are ductile iron unless otherwise noted with an (s).
- No. 60 cap is not suitable for use in vacuum service with Style 72 or Style 750 couplings. No. 61 bull plugs should be used.
- Steel dish caps available through 24"/DN600, contact Victaulic.
- No. 60 Caps are available with taps. Tap sizes range from ½" up to 4" maximum, depending on the diameter of the cap, and can be provided centered or offset to suit the application. Contact Victaulic for pricing and availability. All tapped caps are non-cancellable and non-returnable.

4.11 DIMENSIONS

Flanged Adapter Nipple

No. 41

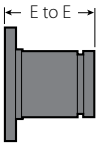

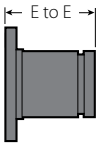

Size		No. 41 ANSI Class 125 Flange Adapter Nipple Flat Face (s)		No. 41-DN PN10/16 Flange Adapter Nipple Flat Face (s)	
Nominal inches DN	**Actual Outside Diameter** inches mm	**E to E** inches mm	**Approx. Weight (Each)** lb kg	**E to E** inches mm	**Approx. Weight (Each)** lb kg
¾ DN20	1.050 26.9	3.00 76	+	NA	NA
1 DN25	1.315 33.7	3.00 76	2.0 0.9	3.00 76	2.6 1.2
1 ¼ DN32	1.660 42.4	4.00 102	3.0 1.4	3.00 76	4.1 1.9
1 ½ DN40	1.900 48.3	4.00 102	3.5 1.6	NA	NA
2 DN50	2.375 60.3	4.00 102	5.5 2.5	4.00 102	6.2 2.8
2 ½	2.875 73.0	4.00 102	8.0 3.6	NA	NA
DN65	3.000 76.1	NA	NA	4.00 102	7.1 3.2
3 DN80	3.500 88.9	4.00 102	9.5 4.3	4.00 102	9.0 4.1
3 ½ DN90	4.000 101.6	4.00 102	+	NA	NA
	4.250 108.0	NA	NA	NA	NA
4 DN100	4.500 114.3	6.00 152	16.7 7.6	6.00 152	12.8 5.8
4 ½	5.000 127.0	NA	NA	NA	NA
	5.250 133.0	NA	NA	NA	NA
DN125	5.500 139.7	NA	NA	6.00 152	16.8 7.6
5	5.563 141.3	6.00 152	21.5 9.8	NA	NA
	6.500 165.1	NA	NA	NA	NA
6 DN150	6.625 168.3	6.00 152	26.5 12.0	6.00 152	20.5 9.3
200A	216.3	NA	NA	NA	NA

[1] For 14"/DN350 and larger roll grooved systems, Victaulic offers the Advanced Groove System (AGS). For pricing and availability of cut groove fittings in this size, contact your nearest Victaulic sales representative.

(s) = Carbon Steel

NA = Not Available

"+" = Contact Victaulic for details

4.11 DIMENSIONS (CONTINUED)

Flanged Adapter Nipple

No. 41

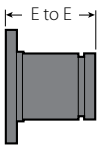

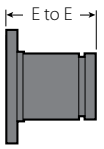

Size		No. 41 ANSI Class 125 Flange Adapter Nipple Flat Face (s)		No. 41-DN PN10/16 Flange Adapter Nipple Flat Face (s)	
Nominal inches DN	**Actual Outside Diameter** inches mm	**E to E** inches mm	**Approx. Weight (Each)** lb kg	**E to E** inches mm	**Approx. Weight (Each)** lb kg
8 DN200	8.625 219.1	6.00 152	39.0 17.7	6.00 152	30.8 14.0
250A	267.4	NA	NA	NA	NA
10 DN250	10.750 273.0	8.00 203	64.2 29.1	8.00 203	46.3 21.0
300A	318.5	NA	NA	NA	NA
12 DN300	12.750 323.9	8.00 203	87.0 39.5	8.00 203	58.7 26.6

[1] For 14"/DN350 and larger roll grooved systems, Victaulic offers the Advanced Groove System (AGS). For pricing and availability of cut groove fittings in this size, contact your nearest Victaulic sales representative.

(s) = Carbon Steel

NA = Not Available

"+" = Contact Victaulic for details

4.11 DIMENSIONS (CONTINUED)

Flanged Adapter Nipple

No. 45F
No. 45R
No. 45FE
No. 45RE

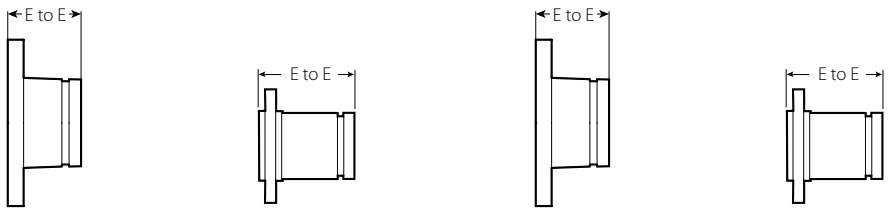

Size		No. 45F ANSI Class 150 Flange Adapter Nipple Flat Face		No. 45R ANSI Class 150 Flange Adapter Nipple Raised Face		No. 45FE PN10/16 Flange Adapter Nipple Flat Face		No. 45RE PN10/16 Flange Adapter Nipple Raised Face	
Nominal inches DN	**Actual Outside Diameter** inches mm	**E to E** inches mm	**Approx. Weight (Each)** lb kg	**E to E** inches mm	**Approx. Weight (Each)** lb kg	**E to E** inches mm	**Approx. Weight (Each)** lb kg	**E to E** inches mm	**Approx. Weight (Each)** lb kg
¾ DN20	1.050 26.9	3.00 (s) 76	2.0 0.9	3.00 (s) 76	2.0 0.9	NA	NA	NA	NA
1 DN25	1.315 33.7	3.00 (s) 76	2.7 1.2	3.00 (s) 76	2.7 1.2	NA	NA	NA	NA
1 ¼ DN32	1.660 42.4	4.00 (s) 102	3.6 1.6	4.00 (s) 102	3.6 1.6	NA	NA	NA	NA
1 ½ DN40	1.900 48.3	4.00 (s) 102	3.9 1.8	4.00 (s) 102	3.9 1.8	2.52 64	+	2.52 64	+
2 DN50	2.375 60.3	4.00 102	6.0 2.7	4.00 102	6.0 2.7	2.52 64	+	2.52 64	+
2 ½	2.875 73.0	4.00 102	9.9 4.5	4.00 102	9.9 4.5	NA	NA	NA	NA
DN65	3.000 76.1	NA	NA	NA	NA	2.52 64	+	2.52 64	+
3 DN80	3.500 88.9	4.00 102	11.7 5.3	4.00 102	11.7 5.3	2.52 64	+	2.52 64	+
3 ½ DN90	4.000 101.6	4.00 (s) 102	13.8 6.3	4.00 (s) 102	13.8 6.3	NA	NA	NA	NA
	4.250 108.0	NA	NA	NA	NA	NA	NA	NA	NA
4 DN100	4.500 114.3	6.00 152	18.5 8.4	6.00 152	18.5 8.4	2.76 70	+	2.76 70	+
DN125	5.500 139.7	NA	NA	NA	NA	2.76 70	+	2.76 70	+
5	5.563 141.3	6.00 (s) 152	21.4 9.7	6.00 (s) 152	21.4 9.7	NA	NA	NA	NA
	6.500 165.1	NA	NA	NA	NA	2.76 70	+	2.76 70	+
6 DN150	6.625 168.3	6.00 152	29.0 13.2	6.00 152	29.0 13.2	2.76 70	+	2.76 70	+
8 DN200	8.625 219.1	6.00 152	42.0 19.1	6.00 152	42.0 19.1	3.15 80	+	3.15 80	+
10 DN250	10.750 273.0	8.00 203	64.2 29.1	8.00 203	64.2 29.1	3.15 80	+	3.15 80	+
12 DN300	12.750 323.9	8.00 203	88.2 40.0	8.00 203	88.2 40.0	3.15 80	+	3.15 80	+
14[1] DN350	14.000 355.6	8.00 (s) 203	126.4 57.3	8.00 203	126.4 57.3	NA	NA	NA	NA
16[1] DN400	16.000 406.4	8.00 (s) 203	150.0 68.0	8.00 203	150.0 68.0	NA	NA	NA	NA

[1] For 14"/DN350 and larger roll grooved systems, Victaulic offers the Advanced Groove System (AGS). For pricing and availability of cut groove fittings in this size, contact your nearest Victaulic sales representative.

(s) = Carbon Steel

NA = Not Available

"+" = Contact Victaulic for details

NOTE

- All fittings are ductile iron unless otherwise noted with an (s).

4.11 DIMENSIONS (CONTINUED)

Flanged Adapter Nipple

No. 45F
No. 45R
No. 45FE
No. 45RE

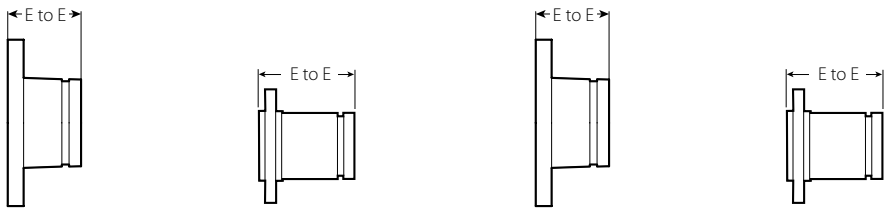

Size		No. 45F ANSI Class 150 Flange Adapter Nipple Flat Face		No. 45R ANSI Class 150 Flange Adapter Nipple Raised Face		No. 45FE PN10/16 Flange Adapter Nipple Flat Face		No. 45RE PN10/16 Flange Adapter Nipple Raised Face	
Nominal inches DN	**Actual Outside Diameter** inches mm	**E to E** inches mm	**Approx. Weight (Each)** lb kg	**E to E** inches mm	**Approx. Weight (Each)** lb kg	**E to E** inches mm	**Approx. Weight (Each)** lb kg	**E to E** inches mm	**Approx. Weight (Each)** lb kg
18[1] DN450	18.000 457.2	8.00 (s) 203	177.0 80.3	8.00 (s) 203	177.0 80.3	NA	NA	NA	NA
20[1] DN500	20.000 508.0	8.00 (s) 203	218.0 98.9	8.00 (s) 203	218.0 98.9	NA	NA	NA	NA
24[1] DN600	24.000 609.6	8.00 (s) 203	283.0 128.4	8.00 (s) 203	283.0 128.4	NA	NA	NA	NA
14 – 60 DN350 – DN1500	For AGS fitting information, see publication 20.05 AGS™								

[1] For 14"/DN350 and larger roll grooved systems, Victaulic offers the Advanced Groove System (AGS). For pricing and availability of cut groove fittings in this size, contact your nearest Victaulic sales representative.

(s) = Carbon Steel

NA = Not Available

"+" = Contact Victaulic for details

NOTE

- All fittings are ductile iron unless otherwise noted with an (s).

4.16 DIMENSIONS (CONTINUED)

Flange Adapter Nipple

No 46F
No 46R

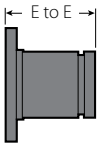

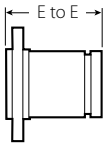

Size		No. 46F ANSI Class 300 Flange Adapter Nipple Flat Face (s)		No. 46R ANSI Class 300 Flange Adapter Nipple Raised Face (s)	
Nominal inches DN	**Actual Outside Diameter** inches mm	**E to E** inches mm	**Approx. Weight (Each)** lb kg	**E to E** inches mm	**Approx. Weight (Each)** lb kg
¾ DN20	1.050 26.9	3.00 76	3.3 1.5	3.00 76	+
1 DN25	1.315 33.7	3.00 76	3.9 1.8	3.00 76	3.9 1.8
1 ¼ DN32	1.660 42.4	4.00 102	4.8 2.2	4.00 102	4.8 2.2
1 ½ DN40	1.900 48.3	4.00 102	6.9 3.1	4.00 102	6.9 3.1
2 DN50	2.375 60.3	4.00 102	8.1 3.7	4.00 102	8.1 3.7
2 ½	2.875 73.0	4.00 102	11.9 5.4	4.00 102	11.9 5.4
3 DN80	3.500 88.9	4.00 102	16.5 7.5	4.00 102	16.5 7.5
3 ½ DN90	4.000 101.6	4.00 102	20.1 9.1	4.00 102	20.1 9.1
4 DN100	4.500 114.3	6.00 152	27.4 12.4	6.00 152	27.4 12.4
5	5.563 141.3	6.00 152	35.3 16.0	6.00 152	35.3 16.0
6 DN150	6.625 168.3	6.00 152	47.5 21.5	6.00 152	47.5 21.5
8 DN200	8.625 219.1	6.00 152	68.0 30.8	6.00 152	68.0 30.8
10 DN250	10.750 273.0	8.00 203	100.8 45.7	8.00 203	100.8 45.7
12 DN300	12.750 323.9	8.00 203	148.0 67.1	8.00 203	148.0 67.1
14[1] DN350	14.000 355.6	8.00 203	180.0 81.8	NA	NA
16[1] DN400	16.000 406.4	8.00 203	237.0 107.5	NA	NA
18[1] DN450	18.000 457.2	8.00 203	297.0 134.7	NA	NA
20[1] DN500	20.000 508.0	8.00 203	+	NA	NA
22[1] DN550	22.000 558.8	8.00 203	+	NA	NA
24[1] DN600	24.000 609.6	8.00 203	+	NA	NA
14 – 60 DN350 – DN1500	For AGS fitting information, see publication 20.05 AGS™				

1 For 14"/DN350 and larger roll grooved systems, Victaulic offers the Advanced Groove System (AGS). For pricing and availability of cut groove fittings in this size, contact your nearest Victaulic sales representative.

(s) = Carbon Steel

NA = Not Available

+ = Contact Victaulic for details

4.12 DIMENSIONS

Swaged Nipple

No. 53
No. 54
No. 55

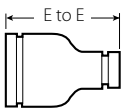

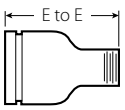

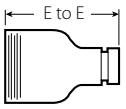

Size						No. 53 Swage Nipple Groove x Groove (s)		No. 54 Swage Nipple Groove x Male Thread[1] (s)		No. 55 Swage Nipple Male Thread[1] x Groove (s)	
Nominal inches DN			Actual Outside Diameter inches mm			E to E inches mm	Approx. Weight (Each) lb kg	E to E inches mm	Approx. Weight (Each) lb kg	E to E inches mm	Approx. Weight (Each) lb kg
2 DN50	x	¾ DN20	2.375 60.3	x	1.050 26.9	6.50 165	2.0 0.9	NA	NA	NA	NA
		1 DN25			1.315 33.7	6.50 165	2.0 0.9	6.50 165	2.0 0.9	6.50 165	2.0 0.9
		1 ¼ DN32			1.660 42.4	6.50 165	2.0 0.9	6.50 165	2.0 0.9	6.50 165	2.0 0.9
		1 ½ DN40			1.900 48.3	6.50 165	2.0 0.9	6.50 165	2.0 0.9	6.50 165	2.0 0.9
2 ½	x	1 DN25	2.875 73.0	x	1.315 33.7	7.00 178	3.0 1.4	7.00 178	3.0 1.4	7.00 178	3.0 1.4
		1 ¼ DN32			1.660 42.4	7.00 178	3.0 1.4	7.00 178	3.0 1.4	7.00 178	3.0 1.4
		1 ½ DN40			1.900 48.3	7.00 178	3.0 1.4	7.00 178	3.0 1.4	7.00 178	3.0 1.4
		2 DN50			2.375 60.3	7.00 178	3.0 1.4	7.00 178	3.0 1.4	7.00 178	3.0 1.4
DN65	x	1 ½ DN40	3.000 76.1	x	1.900 48.3	NA	NA	8.00 203	4.0 1.8	NA	NA
		2 DN50			2.375 60.3	8.00 203	4.0 1.8	NA	NA	NA	NA
3 DN80	x	1 DN25	3.500 88.9	x	1.315 33.7	8.00 203	4.5 2.0	8.00 203	4.5 2.0	8.00 203	4.5 2.0
		1 ¼ DN32			1.660 42.4	8.00 203	4.5 2.0	8.00 203	4.5 2.0	8.00 203	4.5 2.0
		1 ½ DN40			1.900 48.3	8.00 203	4.5 2.0	8.00 203	4.5 2.0	8.00 203	4.5 2.0
		2 DN50			2.375 60.3	8.00 203	4.5 2.0	8.00 203	4.5 2.0	8.00 203	4.5 2.0
		2 ½			2.875 73.0	8.00 203	4.5 2.0	8.00 203	4.5 2.0	8.00 203	4.5 2.0
		DN65			3.000 76.1	8.00 203	4.5 2.0	8.00 203	4.5 2.0	NA	NA
3 ½ DN90	x	3 DN80	4.000 101.6	x	3.500 88.9	8.00 203	6.8 3.1	8.00 203	6.8 3.1	8.00 203	6.8 3.1
4 DN100	x	1 DN25	4.500 114.3	x	1.315 33.7	9.00 229	7.5 3.4	9.00 229	7.5 3.4	9.00 229	7.5 3.4
		1 ¼ DN32			1.660 42.4	9.00 229	7.5 3.4	9.00 229	7.5 3.4	NA	NA
		1 ½ DN40			1.900 48.3	9.00 229	7.5 3.4	9.00 229	7.5 3.4	9.00 229	7.5 3.4
		2 DN50			2.375 60.3	9.00 229	7.5 3.4	9.00 229	7.5 3.4	9.00 229	7.5 3.4
		2 ½			2.875 73.0	9.00 229	7.5 3.4	9.00 229	7.5 3.4	9.00 229	7.5 3.4
		DN65			3.000 76.1	9.00 229	7.5 3.4	NA	NA	NA	NA
		3 DN80			3.500 88.9	9.00 229	7.5 3.4	9.00 229	7.5 3.4	9.00 229	7.5 3.4
		3 ½ DN90			4.000 101.6	9.00 229	7.5 3.4	9.00 229	7.5 3.4	9.00 229	7.5 3.4

[1] Available with British Standard Pipe Threads, specify BSP clearly on order.

(s) = Carbon Steel

NA = Not Available

4.12 DIMENSIONS

Swaged Nipple

No. 53
No. 54
No. 55

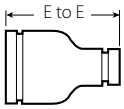

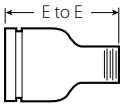

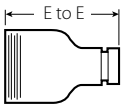

Size						No. 53 Swage Nipple Groove x Groove (s)		No. 54 Swage Nipple Groove x Male Thread[1] (s)		No. 55 Swage Nipple Male Thread[1] x Groove (s)	
Nominal inches DN			Actual Outside Diameter inches mm			E to E inches mm	Approx. Weight (Each) lb kg	E to E inches mm	Approx. Weight (Each) lb kg	E to E inches mm	Approx. Weight (Each) lb kg
5	x	2 DN50	5.563 141.3	x	2.375 60.3	11.00 279	11.5 5.2	11.00 279	11.5 5.2	11.00 279	11.5 5.2
		3 DN80			3.500 88.9	11.00 279	11.5 5.2	11.00 279	11.5 5.2	11.00 279	11.5 5.2
		4 DN100			4.500 114.3	11.00 279	11.5 5.2	11.00 279	11.5 5.2	11.00 279	11.5 5.2
6 DN150	x	1 DN25		x	1.315 33.7	12.00 305	17.0 7.7	12.00 305	17.0 7.7	12.00 305	17.0 7.7
		1¼ DN32			1.660 42.4	12.00 305	17.0 7.7	12.00 305	17.0 7.7	12.00 305	17.0 7.7
		1½ DN40			1.900 48.3	12.00 305	17.2 7.8	12.00 305	17.2 7.8	12.00 305	17.0 7.7
		2 DN50			2.375 60.3	12.00 305	17.4 7.9	12.00 305	17.4 7.9	12.00 305	17.4 7.9
		2½			2.875 73.0	12.00 305	17.4 7.9	12.00 305	17.4 7.9	12.00 305	17.4 7.9
		3 DN80			3.500 88.9	12.00 305	17.4 7.9	12.00 305	17.4 7.9	12.00 305	17.4 7.9
		3½ DN90			4.000 101.6	12.00 305	17.5 7.9	12.00 305	17.5 7.9	NA	NA
		4 DN100			4.500 114.3	12.00 305	17.5 7.9	12.00 305	17.5 7.9	12.00 305	17.5 7.9
		4½			5.000 127.0	12.00 305	17.5 7.9	12.00 305	17.5 7.9	NA	NA
		5			5.563 141.3	12.00 305	17.5 7.9	12.00 305	17.5 7.9	12.00 305	17.5 7.9
8 DN200	x	6 DN150	8.625 219.1	x	6.625 168.3	12.00 305	29.0 13.2	12.00 305	29.0 13.2	12.00 305	29.0 13.2

[1] Available with British Standard Pipe Threads, specify BSP clearly on order.

(s) = Carbon Steel

NA = Not Available

4.13 DIMENSIONS

Female Threaded Adapter

No. 80

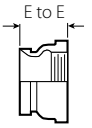

Size		No. 80 Adapter Groove x Female Thread[1]	
Nominal inches DN	**Actual Outside Diameter** inches mm	**E to E** inches mm	**Approx. Weight (Each)** lb kg
¾ DN20	1.050 26.9	2.00 (s) 51	0.6 0.3
1 DN25	1.315 33.7	2.08 53	0.4 0.2
1 ¼ DN32	1.660 42.4	2.29 58	0.6 0.3
1 ½ DN40	1.900 48.3	2.29 58	1.0 0.5
2 DN50	2.375 60.3	2.50 64	1.5 0.7
2 ½	2.875 73.0	2.75 70	1.8 0.8
DN65	3.000 76.1	2.75 70	2.2 1.0
3 DN80	3.500 88.9	2.75 70	2.8 1.3
4 DN100	4.500 114.3	3.25 83	4.5 2.0

[1] Available with British Standard Pipe Threads, specify "BSP" clearly on order.

(s) = Carbon Steel

NOTE

- All fittings are ductile iron unless otherwise noted with an (s).

4.15 DIMENSIONS

Concentric/Eccentric Reducer

No. 50
No. 51

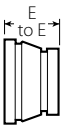

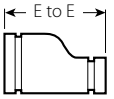

Size						No. 50 Concentric Reducer		No. 51 Eccentric Reducer	
Nominal inches DN			Actual Outside Diameter inches mm			E to E inches mm	Approx. Weight (Each) lb kg	E to E inches mm	Approx. Weight (Each) lb kg
1 DN25	x	¾ DN20	1.315 33.7	x	1.050 26.9	8.00 (s) 203	+	8.00 (s) 203	+
1 ¼ DN32	x	¾ DN20	1.660 42.4	x	1.050 26.9	8.00 (s) 203	1.3 0.6	8.00 (s) 203	1.3 0.6
		1 DN25			1.315 33.7	2.50 64	0.6 0.3	8.00 (s) 203	1.4 0.6
1 ½ DN40	x	¾ DN20	1.900 48.3	x	1.050 26.9	8.50 (s) 216	1.5 0.7	8.50 (s) 216	1.5 0.7
		1 DN25			1.315 33.7	2.50 64	0.8 0.4	8.50 (s) 216	1.7 0.8
		1 ¼ DN32			1.660 42.4	2.50 64	0.9 0.4	8.50 (s) 216	1.8 0.8
2 DN50	x	¾ DN20	2.375 60.3	x	1.050 26.9	2.50 64	0.8 0.4	9.00 (s) 229	2.2 1.0
		1 DN25			1.315 33.7	2.50 64	0.7 0.3	9.00 (s) 229	2.3 1.0
		1 ¼ DN32			1 ¼ DN32	2.50 64	0.8 0.4	9.00 (s) 229	2.5 1.1
		1 ½ DN40			1.900 48.3	2.50 64	1.2 0.5	3.50 89	1.1 0.5
2 ½	x	¾ DN20	2.875 73.0	x	1.050 26.9	9.50 (s) 241	+	9.50 (s) 241	+
		1 DN25			1.315 33.7	2.50 64	1.4 0.6	9.50 (s) 241	3.4 1.5
		1 ¼ DN32			1 ¼ DN32	2.50 64	1.4 0.6	3.50 89	1.3 0.6
		1 ½ DN40			1.900 48.3	2.50 64	1.4 0.6	9.50 (s) 241	3.8 1.7
		2 DN50			2.375 60.3	2.50 64	1.5 0.7	3.50 89	1.6 0.7
DN65	x	1 DN25	3.000 76.1	x	1.315 33.7	2.50 64	+	9.50 (s) 241	+
		1 ¼ DN32			1.660 42.4	2.50 64	+	9.50 (s) 241	+
		1 ½ DN40			1.900 48.3	2.50 64	+	9.50 (s) 241	+
		2 DN50			2.375 60.3	2.50 64	+	9.50 (s) 241	+
		2 ½			2.875 73.0	2.50 64	+	9.50 (s) 241	+

[1] For 14"/DN350 and larger roll grooved systems, Victaulic offers the Advanced Groove System (AGS). For pricing and availability of cut groove fittings in this size, contact your nearest Victaulic sales representative.

(s) = Carbon Steel

NA = Not Available

"+" = Contact Victaulic for details

NOTES

- All fittings are ductile iron unless otherwise noted with an (s).
- Available with make threaded small end No. 52
- Steel eccentric reducers available through 30"/DN750, contact Victaulic for dimensions.

4.15 DIMENSIONS (CONTINUED)

Concentric/Eccentric Reducer

No. 50
No. 51

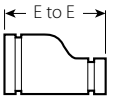

Size						No. 50 Concentric Reducer		No. 51 Eccentric Reducer	
Nominal inches DN			Actual Outside Diameter inches mm			E to E inches mm	Approx. Weight (Each) lb kg	E to E inches mm	Approx. Weight (Each) lb kg
3 DN80	x	¾ DN20	3.500 88.9	x	1.050 26.9	9.50 (s) 241	+	9.50 (s) 241	+
		1 DN25			1.315 33.7	2.50 64	1.8 0.8	9.50 (s) 241	4.8 2.2
		1 ¼ DN32			1.660 42.4	2.50 64	1.4 0.6	9.50 (s) 241	5.0 2.3
		1 ½ DN40			1.900 48.3	2.50 64	2.0 0.9	9.50 (s) 241	5.1 2.3
		2 DN50			2.375 60.3	2.50 64	1.6 0.7	3.50 89	1.9 0.9
		2 ½			2.875 73.0	2.50 64	1.7 0.7	3.50 89	2.1 1.0
		DN65			3.000 76.1	2.50 64	2.1 1.0	9.50 (s) 241	5.4 2.4
3 ½ DN90	x	3 DN80	4.000 101.6	x	3.500 88.9	2.50 64	2.1 1.0	10.00 (s) 254	7.0 3.2
			4.250 108.0	x	2.875 73.0	3.50 89	+	NA	NA
					3.000 76.1	3.50 89	+	NA	NA
					3.500 88.9	3.50 89	+	NA	NA
4 DN100	x	1 DN25	4.500 114.3	x	1.315 33.7	3.00 76	3.0 1.4	10.00 (s) 254	6.5 2.9
		1 ¼ DN32			1.660 42.4	10.00 (s) 254	+	10.00 (s) 254	+
		1 ½ DN40			1.900 48.3	3.00 76	2.6 1.2	10.00 (s) 254	6.9 3.1
		2 DN50			2.375 60.3	3.00 76	3.4 1.5	4.00 102	2.9 1.3
		DN65			3.000 76.1	3.00 76	3.3 1.5	4.00 102	3.2 1.4
		2 ½			2.875 73.0	3.00 76	3.3 1.5	4.00 102	3.1 1.4
		3 DN80			3.500 88.9	3.00 76	3.2 1.5	4.00 102	3.4 1.5
		3 ½ DN90			4.000 101.6	3.00 76	3.0 1.4	10.00 (s) 254	8.1 3.7
			5.250 133.0	x	4.250 108.0	4.50 114	+	NA	NA

[1] For 14"/DN350 and larger roll grooved systems, Victaulic offers the Advanced Groove System (AGS). For pricing and availability of cut groove fittings in this size, contact your nearest Victaulic sales representative.

(s) = Carbon Steel

NA = Not Available

"+" = Contact Victaulic for details

NOTES

- All fittings are ductile iron unless otherwise noted with an (s).
- Available with make threaded small end No. 52
- Steel eccentric reducers available through 30"/DN750, contact Victaulic for dimensions.

4.15 DIMENSIONS

Concentric/Eccentric Reducer
No. 50
No. 51

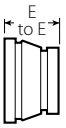

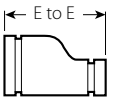

Size						No. 50 Concentric Reducer		No. 51 Eccentric Reducer	
Nominal inches DN			Actual Outside Diameter inches mm			E to E inches mm	Approx. Weight (Each) lb kg	E to E inches mm	Approx. Weight (Each) lb kg
DN125	x	2 DN50	5.500 139.7	x	2.375 60.3	11.00 (s) 279		11.00 (s) 279	
		DN65			3.000 76.1	4.50 114	4.1 1.9	11.00 (s) 279	10.7 4.9
		3 DN80			3.500 88.9	4.50 114	5.7 2.6	11.00 (s) 279	+
		4 DN100			4.500 114.3	4.50 114	5.1 2.3	5.00 127	+
5	x	2 DN50	5.563 141.3	x	2.375 60.3	11.00 (s) 279	10.1 4.6	11.00 (s) 279	10.1 4.6
		2½			2.875 73.0	4.00 102	4.3 2.0	11.00 279	10.8 4.9
		3 DN80			3.500 88.9	4.00 102	5.7 2.6	11.00 (s) 279	11.1 5.0
		3½ DN90			4.000 101.6	11.00 (s) 279	+	11.00 (s) 279	+
		4 DN100			4.500 114.3	3.50 89	4.3 2.0	5.00 127	5.5 2.5
			6.250 159.0	x	3.500 88.9	4.50 114	+	NA	NA
					4.250 108.0	4.00 102	+	NA	NA
					4.500 114.3	4.00 102	+	NA	NA
					5.250 133.0	4.00 102	+	NA	NA
			6.500 165.1	x	2.375 60.3	4.00 102	6.1 2.8	11.50 (s) 292	NA
					3.000 76.1	4.00 102	5.9 2.7	10.50 (s) 292	18.1 8.2
					3.500 88.9	4.00 102	6.2 2.8	5.50 140	6.1 2.8
					4.500 114.3	4.00 102	6.2 2.8	5.50 140	6.8 3.1
					5.500 139.7	4.00 102	5.6 2.5	5.50 140	8.0 3.6
					5.563 141.3	4.00 102	6.4 2.9	5.50 140	7.5 3.4
					6.250 159.0	4.00 102	6.6 3.0	NA	NA

[1] For 14"/DN350 and larger roll grooved systems, Victaulic offers the Advanced Groove System (AGS). For pricing and availability of cut groove fittings in this size, contact your nearest Victaulic sales representative.

(s) = Carbon Steel

NA = Not Available

"+" = Contact Victaulic for details

NOTES

- All fittings are ductile iron unless otherwise noted with an (s).
- Available with make threaded small end No. 52
- Steel eccentric reducers available through 30"/DN750, contact Victaulic for dimensions.

4.15 DIMENSIONS

Concentric/Eccentric Reducer
No. 50
No. 51

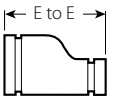

Size						No. 50 Concentric Reducer		No. 51 Eccentric Reducer	
Nominal inches DN			Actual Outside Diameter inches mm			E to E inches mm	Approx. Weight (Each) lb kg	E to E inches mm	Approx. Weight (Each) lb kg
6 DN150	x	1 DN25	6.625 168.3	x	1.315 33.7	4.00 102	6.2 2.8	11.50 (s) 292	+
		1 ½ DN40			1.900 48.3	11.50 (s) 292	+	11.50 (s) 292	+
		2 DN50			2.375 60.3	4.00 102	6.6 3.0	11.50 (s) 292	14.2 6.4
		2 ½			2.875 73.0	4.00 102	6.4 2.9	11.50 (s) 292	14.2 6.4
		DN65			3.000 76.1	11.50 (s) 292	+	11.50 (s) 292	+
		3 DN80			3.500 88.9	4.00 102	6.4 2.9	5.50 140	7.4 3.4
		4 DN100			4.500 114.3	4.00 102	5.8 2.6	5.50 140	7.8 3.5
		DN125			5.500 139.7	4.00 102	6.4 2.9	5.50 140	8.1 3.7
		5			5.563 141.3	4.00 102	6.4 2.9	5.50 140	8.1 3.7
					6.500 165.1	4.00 102	7.2 3.3	11.50 (s) 292	+
			8.515 216.3	x	3.500 88.9	5.00 127	+	NA	NA
					4.500 114.3	5.00 127	+	NA	NA
					5.500 139.7	4.50 114	+	NA	NA
200A	x	165A	216.3	x	6.500 165.1	5.00 127	9.5 4.3	NA	NA

[1] For 14"/DN350 and larger roll grooved systems, Victaulic offers the Advanced Groove System (AGS). For pricing and availability of cut groove fittings in this size, contact your nearest Victaulic sales representative.

(s) = Carbon Steel

NA = Not Available

"+" = Contact Victaulic for details

NOTES

- All fittings are ductile iron unless otherwise noted with an (s).
- Available with make threaded small end No. 52
- Steel eccentric reducers available through 30"/DN750, contact Victaulic for dimensions.

4.15 DIMENSIONS

Concentric/Eccentric Reducer
No. 50
No. 51

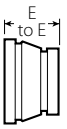

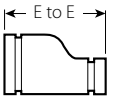

Size						No. 50 Concentric Reducer		No. 51 Eccentric Reducer	
Nominal inches DN			Actual Outside Diameter inches mm			E to E inches mm	Approx. Weight (Each) lb kg	E to E inches mm	Approx. Weight (Each) lb kg
8 DN200	x	2½	8.625 219.1	x	2.875 73.0	12.00 (s) 305	+	12.00 (s) 305	+
		76.1 mm			76.1	12.00 (s) 305	+	12.00 (s) 305	+
		3 DN80			3.500 88.9	5.00 127	9.3 4.2	12.00 (s) 305	22.0 10.0
					4.250 108.0	5.00 127	11.5 5.2	NA	NA
		4 DN100			4.500 114.3	5.00 127	10.4 4.7	6.00 152	10.5 4.8
		DN125			5.500 139.7	5.00 127	11.7 5.3	12.00 (s) 305	24.5 11.1
		5			5.563 141.3	5.00 127	11.6 5.3	12.00 (s) 305	23.8 10.8
					6.250 159.0	4.50 114	11.9 5.4	NA	NA
					6.500 165.1	4.50 114	12.6 5.7	6.00 152	12.8 5.8
		6 DN150			6.625 168.3	5.00 127	11.9 5.4	6.00 152	13.2 6.0
10 DN250	x	4 DN100	10.750 273.0	x	4.500 114.3	6.25 159	20.1 9.1	13.00 (s) 330	33.8 15.3
		DN125			5.500 139.7	13.00 (s) 330	+	13.00 (s) 330	35.7 16.2
		5			5.563 141.3	13.00 (s) 330	35.8 16.2	13.00 (s) 330	35.8 16.2
					6.500 165.1	6.00 152	+	13.00 (s) 330	+
		6 DN150			6.625 168.3	6.00 152	22.0 10.0	13.00 (s) 330	36.9 16.7
		8 DN200			8.625 219.1	6.00 152	23.0 10.4	7.00 178	37.0 16.8
250A	x	200A	267.4	x	216.3	6.00 152	23.0 10.4	NA	NA
12 DN300	x	4 DN100	12.750 323.9	x	4.500 114.3	14.00 (s) 356	48.0 21.8	14.00 (s) 356	48.0 21.8
					6.500 165.1	14.00 (s) 356	+	14.00 (s) 356	+
		6 DN150			6.625 168.3	7.00 178	25.0 11.3	14.00 (s) 356	50.2 22.8
		8 DN200			8.625 219.1	7.00 178	38.0 17.2	14.00 (s) 356	53.5 24.3
		10 DN200			10.750 273.0	7.00 178	38.0 17.2	14.00 (s) 356	56.5 25.6

[1] For 14"/DN350 and larger roll grooved systems, Victaulic offers the Advanced Groove System (AGS). For pricing and availability of cut groove fittings in this size, contact your nearest Victaulic sales representative.

(s) = Carbon Steel

NA = Not Available

"+" = Contact Victaulic for details

NOTES

- All fittings are ductile iron unless otherwise noted with an (s).
- Available with make threaded small end No. 52
- Steel eccentric reducers available through 30"/DN750, contact Victaulic for dimensions.

4.15 DIMENSIONS

Concentric/Eccentric Reducer
No. 50
No. 51

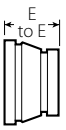

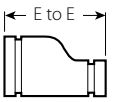

Size						No. 50 Concentric Reducer		No. 51 Eccentric Reducer	
Nominal inches DN			Actual Outside Diameter inches mm			E to E inches mm	Approx. Weight (Each) lb kg	E to E inches mm	Approx. Weight (Each) lb kg
300A	x	250A	318.5	x	216.3	7.00 178	38.0 17.2	NA	NA
14[1] DN350	x	6 DN150	14.000 355.6	x	6.625 168.3	13.00 330	63.1 28.6	13.00 330	77.2 35.0
		8 DN200			8.625 219.1	13.00 330	72.7 33.0	13.00 330	81.6 37.0
					10.528 267.4	13.00 330	80.5 36.5	13.00 330	88.2 40.0
		10 DN200			10.750 273.0	13.00 330	80.5 36.5	13.00 330	88.2 40.0
					12.539 318.5	13.00 330	81.6 37.0	13.00 330	90.4 41.0
		12 DN300			12.750 323.9	13.00 330	81.6 37.0	13.00 330	90.4 41.0
16[1] DN400	x	8 DN200	16.000 406.4	x	8.625 219.1	14.00 356	80.5 36.5	14.00 356	99.2 45.0
		250A			267.4	14.00 356	93.0 42.2	NA	NA
		10 DN200			10.750 273.0	14.00 356	93.0 42.2	14.00 356	99.2 45.0
					12.539 318.5	14.00 356	100.3 45.5	14.00 356	103.6 47.0
		12 DN300			12.750 323.9	14.00 356	100.3 45.5	14.00 356	103.6 47.0
		14 DN350			14.000 355.6	14.00 356	100.3 45.5	14.00 356	108.0 49.0
18[1] DN450	x	10 DN200	18.000 457.2	x	10.750 273.0	15.00 381	112.4 51.0	15.00 381	125.7 57.0
		12 DN300			12.750 323.9	15.00 381	122.4 55.5	15.00 381	134.5 61.0
		14 DN350			14.000 355.6	15.00 381	122.4 55.5	15.00 381	136.7 62.0
		16 DN400			16.000 406.4	15.00 381	126.8 57.5	15.00 381	143.3 65.0

[1] For 14"/DN350 and larger roll grooved systems, Victaulic offers the Advanced Groove System (AGS). For pricing and availability of cut groove fittings in this size, contact your nearest Victaulic sales representative.

(s) = Carbon Steel

NA = Not Available

"+" = Contact Victaulic for details

NOTES

- All fittings are ductile iron unless otherwise noted with an (s).
- Available with make threaded small end No. 52
- Steel eccentric reducers available through 30"/DN750, contact Victaulic for dimensions.

4.15 DIMENSIONS

Concentric/Eccentric Reducer

No. 50
No. 51

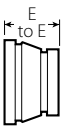

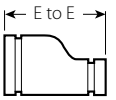

Size						No. 50 Concentric Reducer		No. 51 Eccentric Reducer	
Nominal inches DN			Actual Outside Diameter inches mm			E to E inches mm	Approx. Weight (Each) lb kg	E to E inches mm	Approx. Weight (Each) lb kg
20[1] DN500	x	10 DN200	20.000 508.0	x	10.750 273.0	20.00 508	160.0 72.6	20.00 508	172.0 78.0
		300A			318.5	20.00 508	162.3 73.6	NA	NA
		12 DN300			12.750 323.9	20.00 508	162.3 73.6	20.00 508	183.0 83.0
		14 DN350			14.000 355.6	20.00 508	177.5 80.5	20.00 508	191.8 87.0
		16 DN400			16.000 406.4	20.00 508	176.4 80.0	20.00 508	200.6 91.0
		18 DN450			18.000 457.2	20.00 508	205.0 93.0	20.00 508	209.4 95.0
24[1] DN600	x	10 DN200	24.000 609.6	x	10.750 273.0	20.00 508	222.7 101.0	20.00 508	222.7 101.0
		12 DN300			12.750 323.9	20.00 508	209.4 95.0	20.00 508	238.1 108.0
		14 DN350			14.000 355.6	20.00 508	213.8 97.0	20.00 508	246.9 112.0
		16 DN400			16.000 406.4	20.00 508	215.8 97.9	20.00 508	251.3 114.0
		18 DN450			18.000 457.2	20.00 508	229.3 104.0	20.00 508	244.7 111.0
		20 DN500			20.000 508.0	20.00 508	+	20.00 508	275.6 125.0
14 – 60 DN350 – DN1500			For AGS fitting information, see publication 20.05 AGS™						

[1] For 14"/DN350 and larger roll grooved systems, Victaulic offers the Advanced Groove System (AGS). For pricing and availability of cut groove fittings in this size, contact your nearest Victaulic sales representative.

(s) = Carbon Steel

NA = Not Available

"+" = Contact Victaulic for details

NOTES

- All fittings are ductile iron unless otherwise noted with an (s).
- Available with make threaded small end No. 52
- Steel eccentric reducers available through 30"/DN750, contact Victaulic for dimensions.

4.16 DIMENSIONS

Small Threaded Reducer
No. 52
No. 52F

Size						No. 52 Concentric Reducer Groove x Male Thread[1]		No. 52F Concentric Reducer Groove x Female BSPT Thread	
Nominal inches DN			Actual Outside Diameter inches mm			E to E inches mm	Approx. Weight (Each) lb kg	E to E inches mm	Approx. Weight (Each) lb kg
1 ¼ DN32	x	1 DN25	1.660 42.4	x	1.315 33.7	NA	NA	2.50 64	0.4 0.2
1 ½ DN40	x	1 DN25	1.900 48.3	x	1.315 33.7	2.50 64	0.8 0.4	NA	NA
		1 ¼ DN32			1.660 42.4	2.50 64	0.9 0.4	NA	NA
2 DN50	x	¾ DN20	2.375 60.3	x	1.050 26.9	2.56 65	0.8 0.4	NA	NA
		1 DN25			1.315 33.7	2.50 64	0.9 0.4	NA	NA
		1 ¼ DN32			1.660 42.4	2.50 64	0.9 0.4	NA	NA
		1 ½ DN40			1.900 48.3	2.50 64	1.0 0.5	NA	NA
2 ½	x	1 DN25	2.875 73.0	x	1.315 33.7	2.50 64	1.1 0.5	NA	NA
		1 ¼ DN32			1.660 42.4	2.50 64	1.6 0.7	NA	NA
		1 ½ DN40			1.900 48.3	2.50 64	1.6 0.7	NA	NA
		2 DN50			2.375 60.3	2.50 64	1.8 0.8	NA	NA
DN65	x	1 DN25	3.000 76.1	x	1.315 33.7	2.50 64	1.8 0.8	NA	NA
		1 ¼ DN32			1.660 42.4	2.50 64	1.8 0.8	NA	NA
		1 ½ DN40			1.900 48.3	2.50 64	1.8 0.8	2.50 64	1.8 0.8
		2 DN50			2.375 60.3	2.50 64	1.8 0.8	2.50 64	2.0 0.9

[1] Available with British Standard Pipe Threads, specify "BSP" clearly on order.

(s) = Carbon Steel

NA = Not Available

"+" = Contact Victaulic for details

NOTE

- All fittings are ductile iron unless otherwise noted with an (s).

4.16 DIMENSIONS

Small Threaded Reducer
No. 52
No. 52F

Size						No. 52 Concentric Reducer Groove x Male Thread[1]		No. 52F Concentric Reducer Groove x Female BSPT Thread	
Nominal inches DN			Actual Outside Diameter inches mm			E to E inches mm	Approx. Weight (Each) lb kg	E to E inches mm	Approx. Weight (Each) lb kg
3 DN80	x	¾ DN25	3.500 88.9	x	1.050 26.9	9.50 (s) 241	+	NA	NA
		1 DN25			1.315 33.7	2.50 64	1.8 0.8	NA	NA
		1 ¼ DN32			1.660 42.4	2.50 64	1.5 0.7	2.50 64	2.0 0.9
		1 ½ DN40			1.900 48.3	2.50 64	2.2 1.0	2.50 64	2.0 0.9
		2 DN50			2.375 60.3	2.50 64	2.0 0.9	2.50 64	2.0 0.9
		2 ½			2.875 73.0	2.50 64	2.4 1.1	NA	NA
		DN65			3.000 76.1	2.50 64	2.4 1.1	2.50 64	2.0 0.9
			4.250 108.0	x	1.660 42.4	NA	NA	3.00 76	2.9 1.3
					1.900 48.3	NA	NA	3.00 76	3.1 1.4
					2.375 60.3	3.00 76	1.3 0.6	3.00 76	3.1 1.4
					2.875 73.0	3.00 76	1.3 0.6	NA	NA
					3.000 76.1	3.00 76	1.3 0.6	NA	NA
					3.500 88.9	3.50 89	3.4 1.5	NA	NA
4 DN100	x	1 DN25	4.500 114.3	x	1.315 33.7	3.00 76	3.0 1.4	NA	NA
		1 ¼ DN32			1.660 42.4	NA	NA	3.00 76	3.3 1.5
		1 ½ DN40			1.900 48.3	3.00 76	2.7 1.2	3.00 76	3.3 1.5
		2 DN50			2.375 60.3	3.00 76	3.5 1.6	3.00 76	3.5 1.6
		2 ½			2.875 73.0	3.00 76	3.5 1.6	NA	NA
		DN65			3.000 76.1	3.00 76	2.9 1.3	NA	NA
		3 DN80			3.500 88.9	3.00 76	3.5 1.6	NA	NA

[1] Available with British Standard Pipe Threads, specify "BSP" clearly on order.

(s) = Carbon Steel

NA = Not Available

"+" = Contact Victaulic for details

NOTE

- All fittings are ductile iron unless otherwise noted with an (s).

4.16 DIMENSIONS

Small Threaded Reducer
No. 52
No. 52F

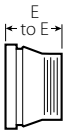

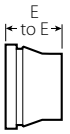

Size						No. 52 Concentric Reducer Groove x Male Thread[1]		No. 52F Concentric Reducer Groove x Female BSPT Thread	
Nominal inches DN			Actual Outside Diameter inches mm			E to E inches mm	Approx. Weight (Each) lb kg	E to E inches mm	Approx. Weight (Each) lb kg
			5.250 133.0	x	3.500 88.9	4.50 114	4.6 2.1	NA	NA
DN125	x	DN65	5.500 139.7	x	3.000 76.1	4.50 114	4.4 2.0	NA	NA
		3 DN80			3.500 88.9	4.50 114	4.4 2.0	NA	NA
5	x	2 DN50	5.563 141.3	x	2.375 60.3	11.00 (s) 279	3.5 1.6	NA	NA
		3 DN80			3.500 88.9	11.00 (s) 279	3.6 1.6	NA	NA
		4 DN100			4.500 114.3	11.00 (s) 279	11.9 5.4	NA	NA
			6.250 159.0	x	1.660 42.4	NA	NA	4.50 114	5.5 2.5
					1.900 48.3	NA	NA	4.50 114	5.5 2.5
					2.375 60.3	NA	NA	4.50 114	5.5 2.5
					3.000 76.1	4.50 114	5.1 2.3	NA	NA
					3.500 88.9	4.75 121	5.5 2.5	NA	NA
			6.500 165.1	x	1.660 42.4	NA	NA	4.00 102	6.4 2.9
					1.900 48.3	NA	NA	4.00 102	6.6 3.0
					2.375 60.3	4.00 102	5.5 2.5	4.00 102	6.6 3.0
					3.000 76.1	4.00 102	5.9 2.7	NA	NA
					3.500 88.9	4.00 102	6.6 3.0	NA	NA

[1] Available with British Standard Pipe Threads, specify "BSP" clearly on order.

(s) = Carbon Steel

NA = Not Available

"+" = Contact Victaulic for details

NOTE

- All fittings are ductile iron unless otherwise noted with an (s).

4.16 DIMENSIONS

Small Threaded Reducer
No. 52
No. 52F

Size						No. 52 Concentric Reducer Groove x Male Thread[1]		No. 52F Concentric Reducer Groove x Female BSPT Thread	
Nominal inches DN			Actual Outside Diameter inches mm			E to E inches mm	Approx. Weight (Each) lb kg	E to E inches mm	Approx. Weight (Each) lb kg
6 DN150	x	1 DN25	6.625 168.3	x	1.315 33.7	4.00 102	5.5 2.5	NA	NA
		2 DN50			2.375 60.3	4.00 102	6.7 3.0	NA	NA
		2½			2.875 73.0	4.00 102	5.8 2.6	NA	NA
		3 DN80			3.500 88.9	4.00 102	8.0 3.6	NA	NA
		4 DN100			4.500 114.3	11.50 (s) 292	15.9 7.2	NA	NA
		5			5.563 141.3	11.50 (s) 292	20.0 9.1	NA	NA
8 DN200	x	4 DN100			4.500 114.3	12.00 (s) 305	22.9 10.4	NA	NA
		6 DN150			6.625 168.3	12.00 (s) 305	25.0 11.3	NA	NA

[1] Available with British Standard Pipe Threads, specify "BSP" clearly on order.

(s) = Carbon Steel

NA = Not Available

"+" = Contact Victaulic for details

NOTE

- All fittings are ductile iron unless otherwise noted with an (s).

4.16 DIMENSIONS (CONTINUED)

Hose Nipple
No. 48

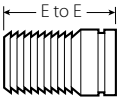

Size		No. 48 Hose Nipple (s)	
Nominal inches DN	**Actual Outside Diameter** inches mm	**E to E** inches mm	**Approx. Weight (Each)** lb kg
¾ DN20	1.050 26.9	3.13 79	0.3 0.1
1 DN25	1.315 33.7	3.38 86	0.4 0.2
1 ¼ DN32	1.660 42.4	3.88 98	0.6 0.3
1 ½ DN40	1.900 48.3	3.88 98	0.8 0.4
2 DN50	2.375 60.3	4.50 114	1.0 0.4
2 ½	2.875 73.0	5.38 137	2.0 0.9
3 DN80	3.500 88.9	5.75 146	3.1 1.4
4 DN100	4.500 114.3	7.00 178	4.9 2.2
5	5.563 141.3	8.75 222	8.0 3.6
6 DN150	6.625 168.3	10.13 257	14.3 6.5
8 DN200	8.625 219.1	11.88 302	24.7 11.2
10 DN250	10.750 273.0	12.50 318	41.0 18.6
12 DN300	12.750 323.9	14.50 368	62.0 28.1

(s) = Carbon Steel

5.0 PERFORMANCE

Flow Data

(Frictional Resistance)

The chart expresses the frictional resistance of various Victaulic fittings as equivalent feet of straight pipe. Fittings not listed can be estimated from the data given, for example, a 22½º elbow is approximately one-half the resistance of a 45º elbow. Values of mid-sizes can be interpolated.

Size		90° Elbows		45° Elbows		Tees	
Nominal inches DN	**Actual Outside Diameter** inches mm	**No. 10** **Std. Radius** feet meters	**No. 100** **1 ½ D** **Long Radius** inches mm	**No. 11** **Std. Radius** feet meters	**No. 110** **1 ½ D** **Long Radius** inches mm	**Branch** feet meters	**Run** feet meters
¾ DN20	1.050 26.9	1.4 0.4	–	0.7 0.2	–	3.3 1.0	1.4 0.4
1 DN25	1.315 33.7	1.7 0.5	–	0.8 0.2	–	4.2 1.3	1.7 0.5
1 ¼ DN32	1.660 42.4	3.8 1.1	–	4.5 1.4	–	6.1 1.9	1.5 0.5
1 ½ DN40	1.900 48.3	5.5 1.7	–	3.7 1.1	–	6.1 1.9	1.2 0.4
2 DN50	2.375 60.3	3.6 1.1	2.5 0.8	1.8 0.5	1.1 0.3	8.5 2.6	3.6 1.1
 DN65	3.000 76.1	4.3 1.3	–	2.3 0.7	–	10.8 3.3	4.3 1.3
3 DN80	3.500 88.9	5.0 1.5	3.8 1.2	2.6 0.8	1.6 0.5	13.0 4.0	5.0 1.5
	4.250 108.0	6.4 2.0	–	3.2 1.0	–	15.3 4.7	6.4 2.0
4 DN100	4.500 114.3	6.8 2.1	5.0 1.5	3.4 1.0	2.1 0.6	16.0 4.9	6.8 2.1
	5.250 133.0	8.1 2.5	–	4.1 1.3	–	20.0 6.1	8.1 2.5
 DN125	5.500 139.7	8.5 2.6	–	4.2 1.3	–	21.0 6.4	8.5 2.6
5	5.563 141.3	8.5 2.6	–	4.2 1.3	–	21.0 6.4	8.5 2.6
	6.250 159.0	9.4 2.9	–	4.9 1.5	–	25.0 7.6	9.6 2.9
	6.500 165.1	9.6 2.9	–	5.0 1.5	–	25.0 7.6	10.0 3.0
6 DN150	6.625 168.3	10.0 3.0	7.5 2.3	5.0 1.5	3.0 0.9	25.0 7.6	10.0 3.0
8 DN200	8.625 219.1	13.1 4.0	9.8 3.0	6.5 2.0	4.0 1.2	33.1 10.1	13.1 4.0
10 DN250	10.750 273.0	17.0 5.2	12.0 3.7	8.3 2.5	5.0 1.5	41.0 12.5	17.0 5.2
12 DN300	12.750 323.9	20.0 6.1	14.5 4.4	10.0 3.0	6.0 1.8	50.0 15.2	20.0 6.1
14 DN350	14.000 355.6	24.5[1] 7.5	15.8 4.8	18.5[1] 5.6	11.0 3.4	70.0 21.3	23.0 7.0
16 DN400	16.000 406.4	28.0[1] 8.5	18.0 5.5	21.0[1] 6.4	13.0 4.0	80.0 24.4	27.0 8.2
18 DN450	18.000 457.2	31.0[1] 9.4	20.0 6.1	23.5[1] 7.2	14.0 4.3	90.0 27.4	30.0 9.1
20 DN500	20.000 508.0	34.0[1] 10.4	22.5 6.9	25.5[1] 7.8	16.0 4.9	100.0 30.5	33.0 10.1
24 DN600	24.000 609.6	42.0[1] 12.8	27.0 8.2	29.5[1] 9.0	19.0 5.8	120.0 36.6	40.0 12.2

[1] Fitting flow data for 14-24/DN350-DN600 size No. 10 and No. 11 Elbows is based on fittings for Style 07 and Style 77 couplings. For flow data on AGS fittings (No. W10 and No. W11 Elbows), refer to publication 20.05.

6.0 NOTIFICATIONS

WARNING

- **Read and understand all instructions before attempting to install any Victaulic products.**
- **Always verify that the piping system has been completely depressurized and drained immediately prior to installation, removal, adjustment, or maintenance of any Victaulic products.**
- **Confirm that any equipment, branch lines, or sections of piping that may have been isolated for/during testing or due to valve closures/positioning are identified, depressurized, and drained immediately prior to installation, removal, adjustment, or maitenance of any Victaulic products.**
- **The installer shall understand the use of this product and why it was specified for the particular application.**
- **The installer shall understand common industry safety standards and potential consequences of improper product installation.**
- **Wear safety glasses, hardhat, and foot protection.**

Failure to follow these instructions could result in death or serious personal injury and property damage.

7.0 REFERENCE MATERIALS

Galvanized
Publication 07.01 for Original Groove Fittings
Publication 20.05 for AGS Fittings

Plain End
Publication 14.04

Extra Heavy EndSeal "ES"
Publication 07.03

Stainless Steel
Publication 17.16

Fabricated Steel Fittings
Publication 07.04

AGS - Advanced Groove System
from 14 – 60"/DN350 – DN1500
Publication 20.05

Shouldered Ends
Publication 07.06

Aluminum
Publication 21.03

xL fittings for abrasive services
Publication 07.07

Copper
Publication 22.04

Victaulic Base Support Elbows
Publication 07.13

Ductile Iron for AWWA size pipe
Publication 23.05

User Responsibility for Product Selection and Suitability

Each user bears final responsibility for making a determination as to the suitability of Victaulic products for a particular end-use application, in accordance with industry standards and project specifications, and the applicable building codes and related regulations as well as Victaulic performance, maintenance, safety, and warning instructions. Nothing in this or any other document, nor any verbal recommendation, advice, or opinion from any Victaulic employee, shall be deemed to alter, vary, supersede, or waive any provision of Victaulic Company's standard conditions of sale, installation guide, or this disclaimer.

Intellectual Property Rights

No statement contained herein concerning a possible or suggested use of any material, product, service, or design is intended, or should be constructed, to grant any license under any patent or other intellectual property right of Victaulic or any of its subsidiaries or affiliates covering such use or design, or as a recommendation for the use of such material, product, service, or design in the infringement of any patent or other intellectual property right. The terms "Patented" or "Patent Pending" refer to design or utility patents or patent applications for articles and/or methods of use in the United States and/or other countries.

Note

This product shall be manufactured by Victaulic or to Victaulic specifications. All products to be installed in accordance with current Victaulic installation/assembly instructions. Victaulic reserves the right to change product specifications, designs and standard equipment without notice and without incurring obligations.

Installation

Reference should always be made to the Victaulic installation handbook or installation instructions of the product you are installing. Handbooks are included with each shipment of Victaulic products, providing complete installation and assembly data, and are available in PDF format on our website at www.victaulic.com.

Warranty

Refer to the Warranty section of the current Price List or contact Victaulic for details.

Trademarks

Victaulic and all other Victaulic marks are the trademarks or registered trademarks of Victaulic Company, and/or its affiliated entities, in the U.S. and/or other countries.

07.01 1449 Rev AM Updated 08/2024

Anvil Cast Iron & Malleable Iron Threaded Fittings

Manufactured in Columbia, PA USA, Anvil offers the most complete line of Cast Iron and Malleable Iron Threaded Fittings in the industry. Our versatile range of fittings is designed to provide connection options for different applications and environments.

Cast Iron (Gray Iron) Threaded Fittings are manufactured in accordance with ASME/ANSI B14.4 and are UL/ULC listed and FM approved.

Malleable Iron Fittings are manufactured in accordance with ASME/ANSI B16.3 and Unions ASME/ANSI B16.39 and are available in Class 150, Class 250, and Class 300 UL/ULC listed and FM approved. In both classes, all Elbows and Tees ⅜" and larger are 100% air tested at a minimum of 100 psi (6.9 bar).

Cast Iron Flanged Fittings are manufactured in accordance with ASME B16.1 and are available in both Class 125 and Class 250.

Anvil Steel Pipe Nipples & Steel Pipe Couplings

Anvil offers a variety of Steel Pipe Nipples and Steel Pipe Couplings for the fire protection industry.

Anvil's Steel Pipe Nipples are manufactured in accordance with ASTM/ANSI A 733 welded and seamless carbon steel pipe nipples. Materials include black and hot-dipped galvanized finishes. Anvil manufactures a wide range of stock pipe nipples in ⅛" diameter through 8" diameter close through 72" inch length in half-inch increments. We also offer standard nipple packs ranging from one each (close to 6") and standard six packs which offer multiple counts of each. Cartons are packed with handles for easy carrying.

Steel Pipe Couplings are manufactured in accordance with ASTM specification A 865. Straight-tapped couplings range in size from ⅛" NPS through 2" NPS, while 2½" NPS and larger are taper tapped.

SPF Ductile Iron & Cast Iron Threaded Fittings

SPF Ductile Iron Threaded Fittings are UL/ULC Listed and FM Approved for 500 psi service. These fittings provide a dependable threaded connection and are available in a range of styles and specifications. All SPF Ductile Iron Threaded Fittings dimensions conform to ANSI B16.3 Class 150 requirements, and threads are NPT per ANSI/ASME B1.20.1.

SPF Cast Iron Threaded Fittings are UL/ULC Listed and FM Approved for 300 psi service. These fittings are available in a range of styles and specifications. All SPF Cast Iron Threaded Fittings dimensions conform to ANSI B16.4 requirements, and threads are NPT per ANSI/ASME B1.20.1.

90° ELBOW

AnvilStar™
Fire Products Division of Anvil International

SPF/ANVIL

Ductile Iron

MATERIAL SPECIFICATIONS

Ductile iron threaded fittings are UL & ULC Listed & Factory Mutual Approved for 500 psi service.

Ductile iron per ASTM A536 Class 65-45-12.

Dimensions conform to ASME B16.14

Threads are NPT per ANSI/ASME B1.20.1.

NOTICE: Ductile iron fittings have higher tensile strength than that of steel pipe. Therefore, over tightening can cause damage to pipe threads which may cause leakage. Ductile iron fittings should be tightened three turns beyond hand tight, but no more than four turns.

APPROVED

For Listing/Approval Details and Limitations visit our Web Site *www.anvilintl.com* or contact an Anvil®/AnvilStar™ Sales Representative.

90° ELBOW						
Nominal Size	Anvil Item Number	Universal Number	Max. Working Pressure*	Dimensions		Approx. Wt. Each
				A	B	
In. (mm)			PSI (kPa)	In. (mm)	In. (mm)	Lbs. (kg)
1 20	840000004	DB90033	500 3450	1.50 38.10	1.50 38.10	0.62 0.28
1¼ 32	840000012	DB90044	500 3450	1.75 44.45	1.75 44.45	0.90 0.41
1½ 40	840000020	DB90055	500 3450	1.94 49.276	1.94 49.276	1.20 0.54
2 50	840000038	DB90066	500 3450	2.25 57.15	2.25 57.15	1.85 0.84

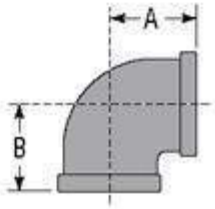

* UL, ULC & FM Pressure Ratings

For additional listings and approvals, see the technical data section.

45° ELBOW

ANVILSt
Fire Products Division of Anvil Inte

SPF/ANVIL

Ductile

MATERIAL SPECIFICATION

Ductile iron threaded fittings are UL & ULC
Factory Mutual Approved for 500 psi ser

Ductile iron per ASTM A536 Class 65-45-1

Dimensions conform to ASME B16.14

Threads are NPT per ANSI/ASME B1.20.1

NOTICE: Ductile iron fittings have higher tensile strength than
pipe. Therefore, over tightening can cause damage to pipe thre
may cause leakage. Ductile iron fittings should be tightened thr
beyond hand tight, but no more than four turns.

FM
APPROVED

For Listing/Approval D
and Limitations visit our
www.anvilintl.com or co
Anvil®/AnvilStar™ Sales Rep

45° ELBOW

Nominal Size	Anvil Item Number	Universal Number	Max. Working Pressure*	Dimensions		Approx. Wt. Each
				A	B	
In. (mm)			PSI (kPa)	In. (mm)	In. (mm)	Lbs. (kg)
1 25	840002133	DB45033	500 3450	1.12 28.44	1.12 28.44	0.46 0.21
1¼ 32	840002141	DB45044	500 3450	1.29 32.76	1.29 32.76	0.73 0.33
1½ 40	840002158	DB45055	500 3450	1.43 36.32	1.43 36.32	0.92 0.42
2 50	840002166	DB45066	500 3450	1.68 42.67	1.68 42.67	1.50 0.68

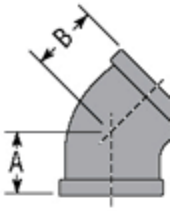

* UL, ULC & FM Pressure Ratings

For additional listings and approvals, see the technical data section.

REDUCING 90° ELBOW

AnvilStar™
Fire Products Division of Anvil® International

SPF/ANVIL

Ductile Iron

Submittal Sheet

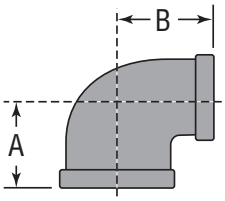

REDUCING 90° ELBOW

Nominal Size	Anvil Item Number	Universal Number	Max. Working Pressure	Dimensions		Approx. Wt. Each
				A	B	
In. (mm)			*PSI (kPa)*	*In. (mm)*	*In. (mm)*	*Lbs. (kg)*
1 x ½	840001036	DB90031	500	1.26	1.36	0.44
25 x 15			*3450*	*32.00*	*34.54*	*0.20*
1 x ¾	840001044	DB90032	500	1.37	1.45	0.52
25 x 20			*3450*	*34.79*	*36.83*	*0.24*
1¼ x ½	840001051	DB90041	500	1.34	1.53	0.64
32 x 15			*34550*	*34.03*	*38.86*	*0.29*
1¼ x ¾	840001069	DB90042	500	1.45	1.62	0.72
32 x 20			*3450*	*36.83*	*41.14*	*0.33*
1¼ x 1	840001077	DB90043	500	1.58	1.67	0.75
32 x 25			*3450*	*40.13*	*42.41*	*0.34*
1½ x 1	840001085	DB90053	500	1.65	1.80	0.92
40 x 25			*3450*	*41.91*	*45.72*	*0.42*
1½ x 1¼	840001093	DB90054	500	1.82	1.88	1.08
40 x 32			*3450*	*46.22*	*47.75*	*0.49*
2 x ½	840001101	DB90061	500	1.49	1.88	1.08
50 x 15			*3450*	*37.84*	*47.75*	*0.49*
2 x ¾	840001119	DB90062	500	1.60	1.97	1.24
50 x 20			*3450*	*40.64*	*50.03*	*0.56*
2 x 1	840001127	DB90063	500	1.73	2.02	1.40
50 x 25			*3450*	*43.94*	*51.30*	*0.64*
2 x 1¼	840001135	DB90064	500	1.90	2.10	1.52
50 x 32			*3450*	*48.26*	*53.34*	*0.70*
2 x 1½	840001143	DB90065	500	2.02	2.16	1.65
50 x 40			*3450*	*51.30*	*54.86*	*0.75*

MATERIAL SPECIFICATIONS

Ductile iron threaded fittings are UL & ULC Listed & Factory Mutual Approved for 500 psi service.
Ductile iron per ASTM A536 Class 65-45-12.
Dimensions conform to ASME B16.3 Class 150.
Threads are NPT per ANSI/ASME B1.20.1.

UL FM ULC
APPROVED
For Listing / Approval details contact your AnvilStar™ Representative.

NOTICE: Ductile iron fittings have higher tensile strength than that of steel pipe. Therefore, over tightening can cause damage to pipe threads which may cause leakage. Ductile iron fittings should be tightened three turns beyond hand tight, but no more than four turns.

PROJECT INFORMATION:		APPROVAL STAMP:
Project:		
Date:	**Phone:**	
Architect / Engineer:		
Contractor:		
Address:		
Notes 1:		
Notes 2:		

For the latest UL/ULC Listed and FM Approved pressure ratings, versus pipe schedule, go to **www.anvilstar.com** or contact your local AnvilStar representative

ANVIL INTERNATIONAL, INC.

STRAIGHT TEE

AnvilStar
Fire Products Division of Anvil International

SPF/ANVIL

Ductile Iron

MATERIAL SPECIFICATIONS

Ductile iron threaded fittings are UL & ULC Listed & Factory Mutual Approved for 500 psi service.

Ductile iron per ASTM A536 Class 65-45-12.

Dimensions conform to ASME B16.14

Threads are NPT per ANSI/ASME B1.20.1.

NOTICE: Ductile iron fittings have higher tensile strength than that of steel pipe. Therefore, over tightening can cause damage to pipe threads which may cause leakage. Ductile iron fittings should be tightened three turns beyond hand tight, but no more than four turns.

APPROVED

For Listing/Approval Details and Limitations visit our Web Site *www.anvilintl.com* or contact an Anvil®/AnvilStar™ Sales Representative

STRAIGHT TEE

Nominal Size	Anvil Item Number	Universal Number	Max. Working Pressure*	Dimensions		Approx. Wt. Each
				A	B	
In. (mm)			PSI (kPa)	In. (mm)	In. (mm)	Lbs. (kg)
1 25	840003164	DT333	500 3450	1.50 38.10	1.50 38.10	0.85 0.39
1¼ 32	840003172	DT444	500 3450	1.75 44.45	1.75 44.45	1.22 0.55
1½ 40	840003180	DT555	500 3450	1.94 49.27	1.94 49.27	1.55 0.70
2 50	840003198	DT666	500 3450	2.25 57.15	2.25 57.15	2.45 1.11

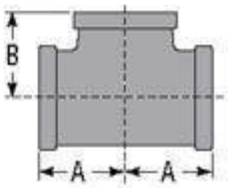

* UL, ULC & FM Pressure Ratings

For additional listings and approvals, see the technical data section.

REDUCING TEE

AnvilStar™
Fire Products Division of Anvil International

SPF/ANVIL

Ductile Iron

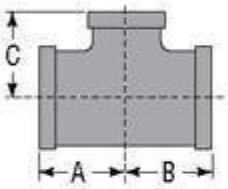

MATERIAL SPECIFICATIONS

Ductile iron threaded fittings are UL & ULC Listed & Factory Mutual Approved for 500 psi service.

Ductile iron per ASTM A536 Class 65-45-12.

Dimensions conform to ASME B16.14

Threads are NPT per ANSI/ASME B1.20.1.

NOTICE: Ductile iron fittings have higher tensile strength than that of steel pipe. Therefore, over tightening can cause damage to pipe threads which may cause leakage. Ductile iron fittings should be tightened three turns beyond hand tight, but no more than four turns.

For Listing/Approval Details and Limitations visit our Web Site *www.anvilintl.com* or contact an Anvil®/AnvilStar™ Sales Representative.

UL ULC FM APPROVED

* UL, ULC & FM Pressure Ratings

For additional listings and approvals, see the technical data section.

REDUCING TEE

Nominal Size	Anvil Item Number	Universal Number	Max. Working Pressure*	Dimensions A	Dimensions B	Dimensions C	Approx. Wt. Each
In. (mm)			PSI (kPa)	In. (mm)	In. (mm)	In. (mm)	Lbs. (kg)
1 x ½ x 1 (25 x 15 x 25)	840004196	DT313	500 (3450)	1.50 (38.10)	1.36 (34.54)	1.50 (38.10)	0.64 (0.29)
1 x ¾ x 1 (25 x 20 x 25)	840004204	DT323	500 (3450)	1.50 (38.10)	1.45 (36.83)	1.50 (38.10)	0.73 (0.33)
1 x 1 x ½ (25 x 25 x 15)	840004212	DT331	500 (3450)	1.26 (32.00)	1.26 (32.00)	1.36 (34.54)	0.71 (0.32)
1 x 1 x ¾ (25 x 25 x 20)	840004220	DT332	500 (3450)	1.37 (34.80)	1.37 (34.80)	1.45 (36.83)	0.76 (0.34)
1 x 1 x 1¼ (25 x 25 x 32)	840004238	DT334	500 (3450)	1.67 (42.41)	1.67 (42.41)	1.58 (40.13)	0.98 (0.44)
1 x 1 x 1½ (25 x 25 x 40)	840004246	DT335	500 (3450)	1.80 (45.72)	1.80 (45.72)	1.65 (41.91)	1.16 (0.53)
1¼ x 1 x ½ (32 x 25 x 15)	840004253	DT431	500 (3450)	1.34 (34.04)	1.26 (32.00)	1.53 (38.86)	0.82 (0.37)
1¼ x 1 x ¾ (32 x 25 x 20)	840004261	DT432	500 (3450)	1.45 (36.83)	1.37 (34.80)	1.62 (41.15)	0.90 (0.41)
1¼ x 1 x 1 (32 x 25 x 25)	840004279	DT433	500 (3450)	1.58 (40.13)	1.50 (38.10)	1.67 (42.42)	1.00 (0.45)
1¼ x 1 x 1¼ (32 x 25 x 32)	840004287	DT434	500 (3450)	1.75 (44.45)	1.67 (42.42)	1.75 (44.45)	1.08 (0.49)
1¼ x 1 x 1½ (32 x 25 x 40)	840004295	DT435	500 (3450)	1.88 (47.75)	1.80 (45.72)	1.82 (46.22)	1.42 (0.64)
1¼ x 1¼ x ½ (32 x 32 x 15)	840004303	DT441	500 (3450)	1.34 (34.04)	1.34 (34.04)	1.53 (38.86)	0.86 (0.39)
1¼ x 1¼ x ¾ (32 x 32 x 20)	840004311	DT442	500 (3450)	1.45 (36.83)	1.45 (36.83)	1.62 (41.15)	0.92 (0.42)
1¼ x 1¼ x 1 (32 x 32 x 25)	840004329	DT443	500 (3450)	1.58 (40.13)	1.58 (40.13)	1.67 (42.42)	0.95 (0.43)
1¼ x 1¼ x 1½ (32 x 32 x 40)	840004337	DT445	500 (3450)	1.88 (47.75)	1.88 (47.75)	1.82 (46.22)	1.45 (0.66)
1¼ x 1¼ x 2 (32 x 32 x 50)	840004345	DT446	500 (3450)	2.10 (53.34)	2.10 (53.34)	1.90 (48.26)	1.75 (0.79)
1½ x 1 x ½ (40 x 25 x 15)	840004352	DT531	500 (3450)	1.41 (35.81)	1.34 (34.04)	1.66 (42.16)	0.95 (0.43)
1½ x 1 x ¾ (40 x 25 x 20)	840004360	DT532	500 (3450)	1.52 (38.61)	1.37 (34.80)	1.75 (44.45)	1.14 (0.52)
1½ x 1 x 1 (40 x 25 x 25)	840004378	DT533	500 (3450)	1.65 (41.91)	1.50 (38.10)	1.80 (45.72)	1.17 (0.53)
1½ x 1 x 1¼ (40 x 25 x 32)	840004386	DT534	500 (3450)	1.82 (46.23)	1.67 (42.42)	1.88 (47.75)	1.34 (0.61)
1½ x 1 x 1½ (40 x 25 x 40)	840004394	DT535	500 (3450)	1.94 (49.28)	1.80 (45.72)	1.94 (49.28)	1.45 (0.66)
1½ x 1¼ x ½ (40 x 32 x 15)	840004402	DT541	500 (3450)	1.41 (35.81)	1.34 (34.04)	1.66 (42.16)	1.05 (0.48)
1½ x 1¼ x ¾ (40 x 32 x 20)	840004410	DT542	500 (3450)	1.52 (38.61)	1.45 (36.83)	1.75 (44.45)	1.15 (0.5)
1½ x 1¼ x 1 (40 x 32 x 25)	840004428	DT543	500 (3450)	1.65 (41.91)	1.58 (40.13)	1.80 (45.72)	1.25 (0.57)

REDUCING TEE

Nominal Size	Anvil Item Number	Universal Number	Max. Working Pressure*	Dimensions A	Dimensions B	Dimensions C	Approx. Wt. Each
In. (mm)			PSI (kPa)	In. (mm)	In. (mm)	In. (mm)	Lbs. (kg)
1½ x 1¼ x 2 (40 x 32 x 50)	840004436	DT546	500 (3450)	2.16 (54.86)	2.10 (53.34)	2.02 (51.30)	1.90 (0.86)
1½ x 1½ x ½ (40 x 40 x 15)	840004444	DT551	500 (3450)	1.41 (35.81)	1.41 (35.81)	1.16 (29.46)	1.15 (0.52)
1½ x 1½ x ¾ (40 x 40 x 20)	840004451	DT552	500 (3450)	1.52 (38.61)	1.52 (38.61)	1.75 (44.45)	1.24 (0.56)
1½ x 1½ x 1 (40 x 40 x 25)	840004469	DT553	500 (3450)	1.65 (41.91)	1.65 (41.91)	1.80 (45.72)	1.30 (0.59)
1½ x 1½ x 1¼ (40 x 40 x 32)	840004477	DT554	500 (3450)	1.82 (46.23)	1.82 (46.23)	1.88 (47.75)	1.48 (0.67)
1½ x 1½ x 2 (40 x 40 x 50)	840004485	DT556	500 (3450)	2.16 (54.86)	2.16 (54.86)	2.02 (51.30)	1.98 (0.90)
2 x 1 x 2 (50 x 25 x 50)	840004493	DT636	500 (3450)	2.25 (57.15)	2.02 (51.31)	2.25 (57.15)	2.15 (0.98)
2 x 1¼ x 2 (50 x 32 x 50)	840004501	DT646	500 (3450)	2.25 (57.15)	2.10 (53.34)	2.25 (57.15)	2.30 (1.04)
2 x 1½ x ½ (50 x 40 x 15)	840004519	DT651	500 (3450)	1.49 (37.85)	1.41 (35.81)	1.88 (47.75)	1.50 (0.68)
2 x 1½ x ¾ (50 x 40 x 20)	840004527	DT652	500 (3450)	1.60 (40.64)	1.52 (38.61)	1.97 (50.04)	1.62 (0.73)
2 x 1½ x 1 (50 x 40 x 25)	840004535	DT653	500 (3450)	1.73 (43.94)	1.65 (41.91)	2.02 (51.31)	1.64 (0.74)
2 x 1½ x 1¼ (50 x 40 x 32)	840004543	DT654	500 (3450)	1.90 (48.26)	1.82 (46.23)	2.10 (53.34)	1.80 (0.82)
2 x 1½ x 1½ (50 x 40 x 40)	840004550	DT655	500 (3450)	2.02 (51.31)	1.94 (49.28)	2.16 (54.86)	2.00 (0.91)
2 x 1½ x 2 (50 x 40 x 50)	840004568	DT656	500 (3450)	2.25 (57.15)	2.16 (54.86)	2.25 (57.15)	2.35 (1.07)
2 x 2 x ½ (50 x 50 x 15)	840004576	DT661	500 (3450)	1.49 (37.85)	1.49 (37.85)	1.88 (47.75)	1.60 (0.73)
2 x 2 x ¾ (50 x 50 x 20)	840004584	DT662	500 (3450)	1.60 (40.64)	1.60 (40.64)	1.97 (50.04)	1.68 (0.76)
2 x 2 x 1 (50 x 50 x 25)	840004592	DT663	500 (3450)	1.73 (43.94)	1.73 (43.94)	2.02 (51.31)	1.85 (0.84)
2 x 2 x 1¼ (50 x 50 x 32)	840004600	DT664	500 (3450)	1.90 (44.45)	1.90 (42.42)	2.10 (44.45)	2.04 (0.93)
2 x 2 x 1½ (50 x 50 x 40)	840004618	DT665	500 (3450)	2.02 (44.45)	2.02 (42.42)	2.16 (44.45)	2.18 (0.99)
2 x 2 x 2½ (50 x 50 x 65)	-	DT667	500 (3450)	2.60 (44.45)	2.60 (42.42)	2.39 (44.45)	3.61 (1.64)
2½ x 2 x ¾ (65 x 50 x 20)	-	DT762	500 (3450)	1.74 (44.45)	1.60 (42.42)	2.32 (44.45)	2.28 (1.03)

BULL HEAD TEE

AnvilStar
Fire Products Division of Anvil International

SPF/ANVIL

Ductile Iron

MATERIAL SPECIFICATIONS

Ductile iron threaded fittings are UL & ULC Listed & Factory Mutual Approved for 500 psi service.

Ductile iron per ASTM A536 Class 65-45-12.

Dimensions conform to ASME B16.14

Threads are NPT per ANSI/ASME B1.20.1.

NOTICE: Ductile iron fittings have higher tensile strength than that of steel pipe. Therefore, over tightening can cause damage to pipe threads which may cause leakage. Ductile iron fittings should be tightened three turns beyond hand tight, but no more than four turns.

APPROVED

For Listing/Approval Details and Limitations visit our Web Site *www.anvilintl.com* or contact an Anvil®/AnvilStar™ Sales Representative

BULL HEAD TEE

Nominal Size	Anvil Item Number	Universal Number	Max. Working Pressure*	Dimensions			Approx. Wt. Each
				A	B	C	
In. (mm)			PSI (kPa)	In. (mm)	In. (mm)	In. (mm)	Lbs. (kg)
1 x 1 x 1¼ 25 x 25 x 32	840004238	DT334	500 3450	1.67 42.41	1.67 42.41	1.58 40.13	0.98 0.44
1 x 1 x 1½ 25 x 25 x 40	840004246	DT335	500 3450	1.80 45.72	1.80 45.72	1.65 41.91	1.16 0.53
1¼ x 1 x 1½ 32 x 25 x 40	840004295	DT435	500 3450	1.88 47.75	1.80 45.72	1.82 46.22	1.42 0.64
1¼ x 1¼ x 1½ 32 x 32 x 40	840004337	DT445	500 3450	1.88 47.75	1.88 47.75	1.82 46.22	1.45 0.66
1¼ x 1¼ x 2 32 x 32 x 50	840004345	DT446	500 3450	2.10 53.34	2.10 53.34	1.90 48.26	1.75 0.79
1½ x 1¼ x 2 40 x 32 x 50	840004436	DT546	500 3450	2.16 54.86	2.10 53.34	2.02 51.30	1.90 0.86
1½ x 1½ x 2 40 x 40 x 50	840004485	DT556	500 3450	2.16 54.86	2.16 54.86	2.02 51.30	1.98 0.90

* UL, ULC & FM Pressure Ratings

For additional listings and approvals, see the technical data section.

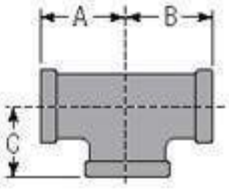

COUPLING

AnvilStar™
Fire Products Division of Anvil International

SPF/ANVIL

Ductile Iron

MATERIAL SPECIFICATIONS

Ductile iron threaded fittings are UL & ULC Listed & Factory Mutual Approved for 500 psi service.

Ductile iron per ASTM A536 Class 65-45-12.

Dimensions conform to ASME B16.14

Threads are NPT per ANSI/ASME B1.20.1.

NOTICE: Ductile iron fittings have higher tensile strength than that of steel pipe. Therefore, over tightening can cause damage to pipe threads which may cause leakage. Ductile iron fittings should be tightened three turns beyond hand tight, but no more than four turns.

APPROVED

For Listing/Approval Details and Limitations visit our Web Site *www.anvilintl.com* or contact an Anvil®/AnvilStar™ Sales Representative.

COUPLING				
Nominal Size	Anvil Item Number	Universal Number	Dimensions A	Approx. Wt. Each
In. (mm)			In. (mm)	Lbs. (kg)
1 25	840008692	DQ1033	1.67 42.42	0.40 0.18
1¼ 32	840008700	DQ1044	1.93 49.02	0.57 0.26
1½ 40	840008718	DQ1055	2.15 54.61	0.75 0.34
2 50	840008726	DQ1066	2.53 64.26	1.15 0.52

For additional listings and approvals, see the technical data section.

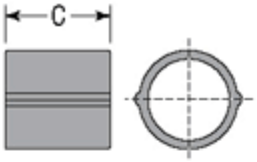

FIG. 459 Class 300 Union

ANVILStar™
Fire Products Division of Anvil® International

ANVIL INTERNATIONAL, INC.

Malleable Iron Unions

Submittal Sheet

Copper or Copper Alloy to Iron

UL FM ULC
APPROVED
For Listing / Approval details contact your AnvilStar™ Representative.

FIGURE 459 CLASS 300 UNION
300lb. wsp, 600lb wog, non-shock

Size	End to End	Weight	
		black	galv.
NPS/DN	*in./mm*	*lbs./kg*	*lbs./kg*
4 *100*	4 7/8 *124*	18 *7.9*	18 *8.1*
1/8 *6*	1 5/16 *33*	0.14 *0.06*	0.14 *0.06*
1/4 *8*	1 13/16 *47*	0.47 *0.21*	0.48 *0.22*
3/8 *10*	1 13/16 *47*	0.43 *0.2*	0.44 *0.2*
1/2 *15*	2 1/16 *52*	0.53 *0.24*	0.55 *0.25*
3/4 *20*	2 1/4 *57*	0.8 *0.36*	0.82 *0.37*
1 *25*	2 9/16 *65*	1.3 *0.58*	1.3 *0.59*
1 1/4 *32*	2 3/4 *70*	1.6 *0.74*	1.7 *0.78*
1 1/2 *40*	3 *76*	2.1 *1*	2.2 *1*
2 *50*	3 3/8 *86*	3.5 *1.6*	3.5 *1.6*
2 1/2 *65*	3 7/8 *98*	5 *2.3*	5.5 *2.5*
3 *80*	4 1/4 *108*	7.7 *3.5*	7.7 *3.5*

† UL Listed

*POA

MATERIAL SPECIFICATIONS

Anvil Class 300 XS/XH fittings conform to American National Standard ASME B16.3 and are in compliance with the requirements of the AAR (1994 AAR Manual of Standards and Practices).

Anvil extra heavy banded pattern fittings in this catalog, sizes 1/4 to 4 NPS (8 to 100 DN), are included in the "List of Inspected Fire Protection Equipment and Materials" issued by Underwriters' Laboratories.

ALL ELBOWS & TEES 3/8" (10 DN) and LARGER ARE 100% GAS TESTED AT A MINIMUM OF 100 PSI. (6.9 bar)

NOTE: See the Technical Data section for pressure-temperature ratings. See AnvilStar Web site for the most current Listings and approvals.

PROJECT INFORMATION:		APPROVAL STAMP:
Project:		
Date:	**Phone:**	
Architect / Engineer:		
Contractor:		
Address:		
Notes 1:		
Notes 2:		

CAP

SPF/ANVIL

ANVILSt
Fire Products Division of Anvil Inte

Ductile

MATERIAL SPECIFICATION

Ductile iron threaded fittings are UL & ULC
Factory Mutual Approved for 500 psi ser

Ductile iron per ASTM A536 Class 65-45-1

Dimensions conform to ASME B16.14

Threads are NPT per ANSI/ASME B1.20.1

NOTICE: Ductile iron fittings have higher tensile strength than
pipe. Therefore, over tightening can cause damage to pipe thre
may cause leakage. Ductile iron fittings should be tightened thr
beyond hand tight, but no more than four turns.

FM
APPROVED

For Listing/Approval D
and Limitations visit our
www.anvilintl.com or co
Anvil®/AnvilStar™ Sales Rep

CAP					
Nominal Size	Anvil Item Number	Universal Number	Max. Working Pressure*	Dimensions A	Approx. Wt. Each
In. (mm)			PSI (kPa)	In. (mm)	Lbs. (kg)
1 25	840005615	DCP003	500 3450	1.16 29.46	0.32 0.15
1¼ 32	840005623	DCP004	500 3450	1.28 32.51	0.43 0.20
1½ 40	840005631	DCP005	500 3450	1.33 33.78	0.60 0.27
2 50	840005649	DCP006	500 3450	1.45 36.83	0.91 0.41

* UL, ULC & FM Pressure Ratings

For additional listings and approvals, see the technical data section.

BUSHINGS

AnvilStar™
Fire Products Division of Anvil International

SPF/ANVIL

Ductile Iron

MATERIAL SPECIFICATIONS

Ductile iron threaded fittings are UL & ULC Listed & Factory Mutual Approved for 500 psi service.

Ductile iron per ASTM A536 Class 65-45-12.

Dimensions conform to ASME B16.14

Threads are NPT per ANSI/ASME B1.20.1.

NOTICE: Ductile iron fittings have higher tensile strength than that of steel pipe. Therefore, over tightening can cause damage to pipe threads which may cause leakage. Ductile iron fittings should be tightened three turns beyond hand tight, but no more than four turns.

APPROVED

For Listing/Approval Details and Limitations visit our Web Site *www.anvilintl.com* or contact an Anvil®/AnvilStar™ Sales Representative.

BUSHINGS

Nominal Size	Anvil Item Number	Universal Number	Dimensions A	Dimensions B	Dimensions C	Style	Approx. Wt. Each
In. (mm)			In. (mm)	In. (mm)	In. (mm)		Lbs. (kg)
1 x ½ 25 x 15	840600001	DBUSH31	0.75 19.05	0.25 6.35	1.42 36.06	Outside	0.22 0.10
1 x ¾ 25 x 20	840600019	DBUSH32	0.75 19.05	0.25 6.35	1.42 36.06	Outside	0.17 0.08
1¼ x 1 32 x 25	840600027	DBUSH43	0.80 20.32	0.28 7.11	1.76 44.70	Outside	0.28 0.13
1½ x 1 40 x 25	840600035	DBUSH53	0.83 21.08	0.31 7.874	2.00 50.80	Outside	0.45 0.20
1½ x 1¼ 40 x 32	840600043	DBUSH54	0.83 21.08	0.31 7.874	2.00 50.80	Outside	0.30 0.14
2 x 1 50 x 25	840600050	DBUSH63	0.88 22.35	0.41 10.414	1.95 49.53	Inside	0.67 0.30
2 x 1¼ 50 x 32	840600068	DBUSH64	0.88 22.35	0.34 8.636	2.48 62.99	Outside	0.73 0.33
2 x 1½ 50 x 40	840600076	DBUSH65	0.88 22.35	0.34 8.636	2.48 62.99	Outside	0.61 0.28

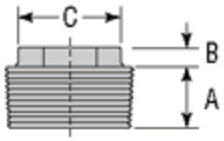

Inside Head

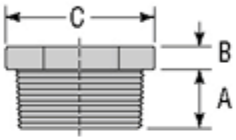

Outside Head

PLUG

SPF/ANVIL

Cast Iron - Class 125 F

MATERIAL SPECIFICATIO

Cast iron threaded fittings are UL & UL and FM Approved.

Cast iron per ASTM A126.

Dimensions conform to ANSI B16.4 Cl

Threads are NPT per ANSI/ASME B1.

c UL us LISTED

For Listings/Approval Deta visit our website at www contact an Anvil® Sales

PLUG			
Nominal Size	Max. Working Pressure▲	Dimensions A	Approx. Wt. Each
In. (mm)	PSI (kPa)	In. (mm)	Lbs. (kg)
½ 15	300 2065	0.94 23.87	0.10 0.05
¾ 20	300 2065	1.07 27.17	0.17 0.08
1 25	300 2065	1.25 31.75	0.28 0.13
1¼ 32	300 2065	1.36 34.54	0.44 0.20
1½ 40	300 2065	1.45 36.83	0.62 0.28
2 50	300 2065	1.56 39.62	0.91 0.41

▲ – Working Pressure Ratings are for reference only and based on Sch. 40 pipe. For the latest UL/ULC, and FM pressure ratings versus pipe schedule, please visit anvilintl.com or contact your local Anvil Representative.

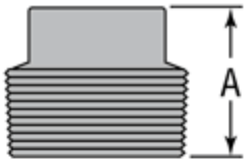

Tee-lets & Drop Nipples

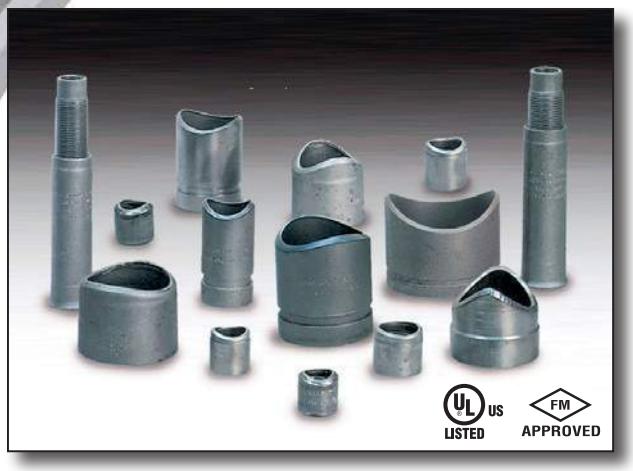

Merit Tee-lets & Drop Nipples

Merit offers a variety of Tee-lets and Adjustable Drop Nipples for fire protection applications. All products are UL listed and FM approved and rated at 300 psi.

Tee-lets and are designed and manufactured to reduce the amount of weld required for Tee-Let installation on thin wall and proprietary flow pipe.

Merit Adjustable Drop Nipples provide the user with the ability to adjust fire sprinkler assemblies to fit flush to the finished ceiling without having to cut a drop nipple or drain the system.

SPF O'Lets

SPF O'Lets

THREADED OUTLETS:
The steel MTM-40 SPF outlet fittings are contoured to provide a precise fit at the opening in the run pipe and conform to standard practice MSS SP-97. These outlets are available in sizes ½" – 2" for 1¼" – 8" run sizes. All fittings are UL/ULC listed, and FM approved for use in fire protection systems. All threads comply with ANSI/ASME B1.20.1 for NPT.

SCHEDULE 40 GROOVED OUTLETS:
The grooved welding outlet fittings are UL/ULC Listed and FM Approved for use in the fire sprinkler systems installed in accordance with the requirements of NFPA Bulletin 13. They are rated for 300 PSI operation in fire sprinkler systems, and higher pressures in other non-critical piping systems.

Valves & Indicator Posts

Mueller Valves

Mueller Valves are available in a variety of styles for fire protection applications including Non-Rising Stem and O.S.&Y. Rising Stem Resilient Wedge Gate Valves, and Swing-Type Check Valves.

Mueller Valves are ideal for system control valves, as well as flanged fire pump applications.

Mueller Indicator Posts

Mueller offers both underground and wall Indicator Posts for easily identifying whether a valve is open or closed.

Mueller Indicator Posts are used in fire protection systems and perform several functions. The Indicator Post provides a means to operate a buried or otherwise inaccessible valve. Also, the Indicator Post readily and clearly indicates whether the valve is open or shut. All Mueller Indicator Posts are UL listed, ULC listed and FM approved.

BRANDS OF ANVIL INTERNATIONAL

Anvil product lines include malleable and cast iron fittings, unions and flanges; seamless and welded steel pipe nipples; steel pipe couplings; universal anvilets; forged steel fittings and unions; pipe hangers and supports; threaded rod; and engineered hangers.

The Gruvlok product line consists of couplings for grooved and plain-end fittings, butterfly valves and check valves; flanges; pump protection components; pipe grooving tools; as well as copper and stainless steel system components.

The SPF/Anvil product line includes a variety of internationally sourced products such as grooved couplings, fittings, cast iron, malleable iron and ductile iron threaded fittings, steel pipe nipples, as well as tee-lets.

Catawissa NACE and API approved wing unions for Standard Service are offered in non-pressure seal ends as well as threaded and butt weld, and are interchangeable with most leading union manufacturers. Fully traceable and available with complete mill certifications, Catawissa's oilfield wing union product line includes the standard ball-and-cone design plus our unique Figure 300 Flat Face design, where space and pipe line separation are a consideration.

Anvil EPS-Engineered Pipe Supports are products used to support piping systems under thermal, seismic, and other dynamic loading conditions. The product line encompasses variable spring hangers, constant supports, sway struts and snubbers as well as standard and special design clamps. Anvil EPS brings the highest quality products and innovative engineering solutions to common and uncommon piping system problems.

JB Smith is the leading manufacturer of oil country tubular fittings, swages and bull plugs – all meeting API specifications. Offering tubing nipples, casing nipples as well as a full line of traditional line pipe and oil country threads in every schedule, JB Smith is the resource for all your oilfield needs.

The Merit product line includes a variety of tee-lets and drop nipples for fire protection applications. Most Merit products are UL/ULC Listed, FM Approved, and rated from 175 to 300 psi.

Steel pipe nipples and steel pipe couplings are manufactured in accordance with the ASTM A733 Standard Specification for Welded and Seamless Carbon Steel and Stainless Steel Pipe Nipples. Steel pipe couplings are manufactured in accordance with the ASTM A865 Standard Specification for Threaded Couplings, Steel, Black or Zinc-Coated (Galvanized) Welded or Seamless, for Use in Steel Pipe Joints. API couplings are manufactured in accordance with the API Specification for line pipe.

Anvil-Strut products include a complete line of channel in stock lengths of 10 and 20 feet, with custom lengths available upon request. A variety of fittings and accessories are also offered. All products can be ordered in an assortment of finishes and material choices including SupR-Green™, Zinc Trivalent Chromium, pre-galvanized, hot-dipped galvanized, electro-galvanized, aluminum, plain, and stainless steel.

Founded in 1983, NAP is a manufacturer of fabrication equipment, including automatic welders, plasma cut-off equipment, hole cutting equipment, make-on machines and pipe threaders. NAP, innovators of pipe fabrication equipment.

CORPORATE OFFICES

2 Holland Way
Exeter, NH 03833
Tel: 603-418-2800
Fax: 603-418-2833
E-mail: sales@anvilintl.com

U.S. REGIONAL SERVICE CENTERS

Northern Region

Regional Distribution & Customer Service Center
7979 W. 183rd Street, Tinley Park, IL 60477
Tel: 708-885-3000
Fax: 708-534-5441
Toll Free: 1-800-301-2701

Southern Region

Regional Distribution & Customer Service Center
1401 Valley View Lane, Suite 150, Irving, TX 75061
Tel: 972-871-1206
Fax: 972-641-8946
Toll Free: 1-800-451-4414

CANADA SERVICE CENTER

Anvil International Canada

Customer Service Center
390 Second Avenue, P.O. Box 40, Simcoe, Ontario N3Y 4K9
Tel: 519-426-4551
Fax: 519-426-5509

INTERNATIONAL SALES

Europe and Middle East Region

Rick van Meesen
rvanmeesen@anvilintl.com
Tel: +31-53-5725570
Fax: +31-53-5725579

Mexico, Puerto Rico and Latin America Region

International Customer Service
Tel: +1-708-885-3000
Fax: +1-708-534-5441

BUILDING CONNECTIONS THAT LAST