Split System Outdoor Unit Schedule

I.D. No.	Mfr.	Model	Refrigerant	Cooling Capacity					Heating Capacity			Electrical Data				Op. Wt.	Line Set	Notes
				BTUH TOTAL	BTUH SENSIBLE	EER	EER2	IEER	BTUH	COP (High)	COP (Low)	Voltage	Ph.	MCA	MOCP			
CU-1	Trane	TWA24044DAA	R-454B	248,110	205420	10.00	9.60	12.50	218,120	3.20	2.05	460	3	40.0	50.0	902 lbs	DUAL CIRCUIT (1-3/8"G, 5/8"L)	
CU-3	Trane	TWA09044DAA	R-454B	93,070	76,820	11.20	10.80	14.10	83,300	3.40	2.25	460	3	15.0	20.0	421 lbs.	DUAL CIRCUIT (1-1/8"G, 5/8"L)	
CU-4	Trane	TWA12044DAA	R-454B	118,740	94,560	11.20	10.80	14.1	110,410	3.40	2.25	460	3	18.0	25.0	433 lbs	DUAL CIRCUIT (1-1/8"G, 1/2"L)	

Split System Indoor Unit Schedule

I.D. No.	Mfr.	Model	Indoor Fan				Unit Power				Op. Wt.	Outside Air CFM	Notes
			CFM	E.S.P.	RPM	B.H.P.	Voltage	Ph.	MCA	MOCP			
AH-1	Trane	TWE20444BAA	8000	0.50	872	3.82	460	3	84.0	90.0	831 lbs	1000	1,2
AH-3	Trane	TWE09044BAA	3000	0.50	829	1.21	460	3	42.0	45.0	336 lbs	1000	1,2
AH-4	Trane	TWE12044BAA	4,000	0.50	831	1.72	460	3	57.0	60.0	406 lbs		1,2

Notes:

1. Provide Two-Speed - VFD -Variable control.
2. Provide smoke detector. (APC SL2000P) Provide direct shutdown of unit.

GENERAL NOTES

1. All duct sizes shown are clear **inside** dimensions.
2. All duct gauges and supports per 2021 International Mechanical Code and SMACNA Duct Construction Manual.
3. ASEI to test airflow upon project completion.
4. Provide 1" thick pipe insulation with k-value between 0.21 - 0.28 for 100°F mean rating temperature for refrigerant piping.
5. All duct transverse seams and longitudinal joints shall be sealed. All ductwork is constructed and sealed per IMC. OSA ductwork meets air leakage requirements per C402.5 and vapor retarder requirements per the IBC.
6. Materials within ducts or plenums shall have a flame spread rating less than 25 and a flame smoke development rating less than 50 per WSEC 2018.
7. All duct systems on this project are low pressure.
8. Condensate drain piping shall be copper, PVC, or PEX.

COMPLETION

Provide Test and Balance Report, Equipment Startup Test Reports, Operation and Maintenance Manuals, and As-built Record Drawings, as applicable, to Owner upon Project Completion.

Scope of Work:

- Remove (3) existing split system heat pumps. Reclaim remaining R22 refrigerant per EPA requirements and dispose unit to metal recycling facility.
- Furnish and install (3) new Trane split system heat pumps with AHRI matched air handlers.
- Flush existing refrigeration lines before pressure test, non-condensable evacuation, and refrigerant recharge.
- Connect units to existing economizer controls.
- Provide crane and operator to remove existing condensing units and set new units in place.
- Disconnect and reconnect 460/3 phase electrical circuit for the HVAC units. Includes installing new disconnect box, fuses, and electrical whips as needed.
- Check, test, and start new units to ensure proper operation.
- One-year warranty on all materials installed and workmanship.

CONTRACTOR NOTE

A separate Right-of-Way permit will be required for any crane operation within the public right-of-way. Please contact the Permit Center for application details prior to work being performed.

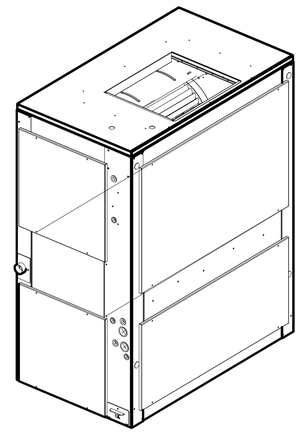

AH-1 (20-TON)	EXISTING UNIT	NEW UNIT
MODEL	TRANE TWE240B400C	TRANE TWE20444BAA
EER	8.5	10.0
WEIGHT	818 lbs	831 lbs

THIS IS A 15 lb INCREASE (1.6%)

AH-3 (7.5-TON)	EXISTING UNIT	NEW UNIT
MODEL	TRANE TWE090B300C	TRANE TWE09044BAA
EER	8.5	10.0
WEIGHT	323 lbs	336 lbs

THIS IS A 13 lb INCREASE (4%)

AH-4 (10-TON)	EXISTING UNIT	NEW UNIT
MODEL	TRANE TWE120B300C	TRANE TWE12044BAA
EER	8.5	10.0
WEIGHT	393 lbs	406 lbs

THIS IS A 13 lb INCREASE (3.3%)

UNIT COMPARISON MATRIX

City of Puyallup Building REVIEWED FOR COMPLIANCE
SKinnear
01/15/2026
3:50:19 PM

Approval of submitted plans is not an approval of omissions or oversights by this office or non compliance with any applicable regulations of local government. The contractor is responsible for making sure that the building complies with all applicable codes and regulations of the local government.

The approved construction plans, documents, and all engineering must be posted on the job at all inspections in a visible and readily accessible location.

Full sized legible color plans are required to be provided by the permitee on site for inspection.

Separate Electrical Permit is required with the Washington State Department of Labor & Industries.
https://lni.wa.gov/licensing-permits/electrical/electrical-permits-fees-and-inspections
or call for Licensing Information:
1-800-647-0982

Vicinity Map

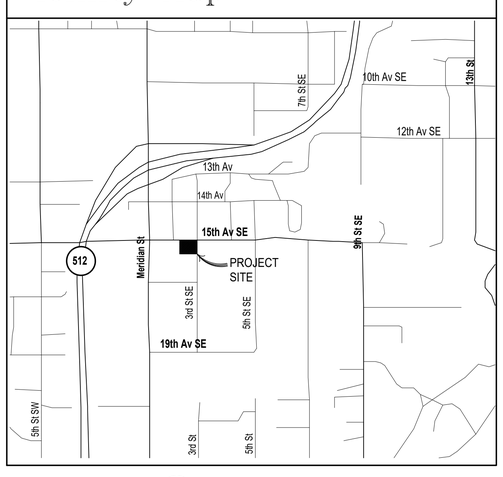

VICINITY MAP
PARCEL #: 7790000045

Mechanical Sheet Index	
Sheet	Title
M-1	HVAC Notes & Schedules
M-2	HVAC Attic Plan
M-3	HVAC Sections

CITY OF PUYALLUP APPROVAL

Air Systems Engineering Inc.
COMFORT SYSTEMS USA
AIR CONDITIONING DESIGN & INSTALLATION
(253) 572-1924
8409 SOUTH CENTER STREET, TACOMA, WA 98408

This drawing is the property of AIR SYSTEMS ENGINEERING, INC. and shall not be reproduced, altered or used without prior written approval by AIR SYSTEMS ENGINEERING, INC. The drawing is to be used only as supplementary information to the architect's drawings. Any discrepancies, omissions, or conflicts between the architect's drawings and these drawings must be reported to the architect immediately. No alterations to the drawing may be made without the consent of the architect.

SEAL

City of Puyallup Development & Permitting Services ISSUED PERMIT
Building | Planning | Engineering | Public Works | Fire | Traffic

PRMH20260023

PROJECT
PUYALLUP MEDICAL BUILDING
REPLACE (3) SPLIT SYSTEMS
222 15th AVE SE
PUYALLUP, WA 98372

REVISIONS
1 PLAN REVIEW COMMENTS

DATE: JANUARY 15, 2026
ASEI NO.: X13477
DRAWN BY: BSR DESIGN BY: JW/TK
REVIEWED BY:
SHEET TITLE: HVAC NOTES & SCHEDULES

© COPYRIGHT 2025 - ASEI, INC. ALL RIGHTS RESERVED

SHEET
M-1
OF 3

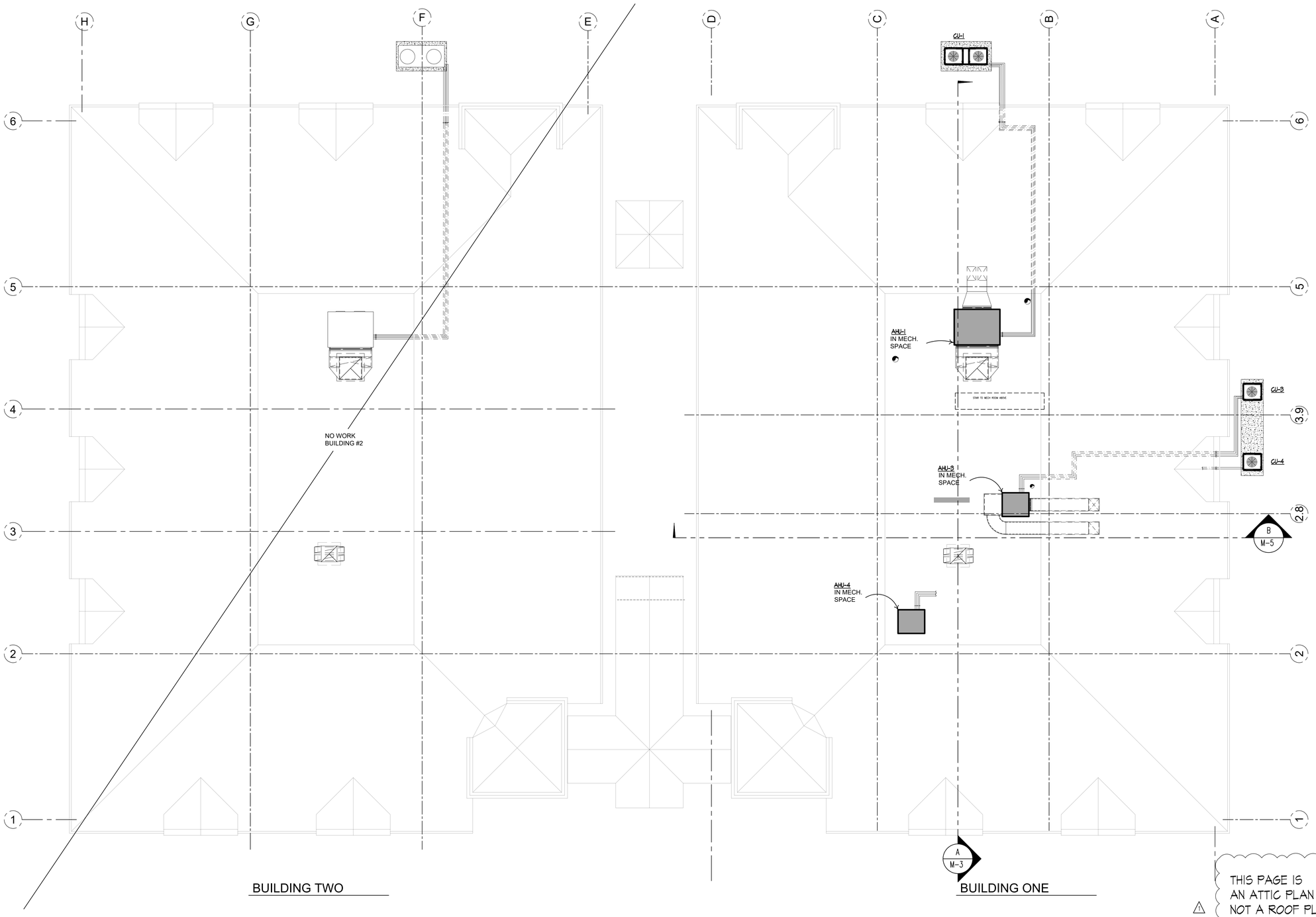

Mechanical Room Plan

SCALE: 1/8"=1'-0"

Air Systems Engineering Inc.

COMFORT SYSTEMS USA

AIR CONDITIONING
DESIGN & INSTALLATION
(253) 572-1924
8000 SOUTH TACOMA WAY, TACOMA, WA 98409

AIR CONDITIONING/SHEET METAL/REFRIGERATION/PROFESSIONAL ENGINEERS/SERVICE & MAINTENANCE

This drawing is the property of AIR SYSTEMS CONTRACTING, INC. and must not be reproduced, shown or used without prior written approval by AIR SYSTEMS CONTRACTING, INC. The drawing is to be used only as supplementary information to the architect's drawings and specifications. Any discrepancies found between the drawings and specifications shall be reported to the architect immediately. No alterations to the drawing are to be made without the consent of the architect.

SEAL

City of Puyallup
Development & Building Services
ISSUED PERMIT

Building	Planning
Engineering	Public Works
Fire	Traffic

PRMH20260023

PROJECT

PUYALLUP MEDICAL BUILDING
REPLACE (3) SPLIT SYSTEMS

222 15th AVE SE
PUYALLUP, WA 98372

REVISIONS

1 PLAN REVIEW COMMENTS

DATE
JANUARY 15, 2026

ASEI NO.
X13477

DRAWN BY: BSR DESIGN BY: JW/TK

REVIEWED BY:

SHEET TITLE
HVAC ATTIC PLAN

© COPYRIGHT 2025 - ASEI, INC. ALL RIGHTS RESERVED

SHEET

M-2

OF 3

1

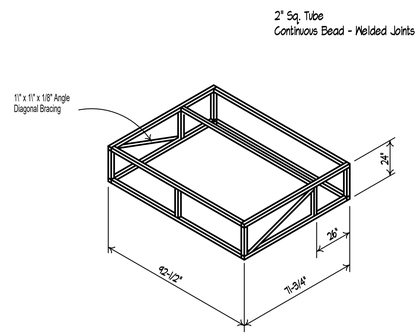

AH-1 Unit Stand (Existing)

N.T.S.

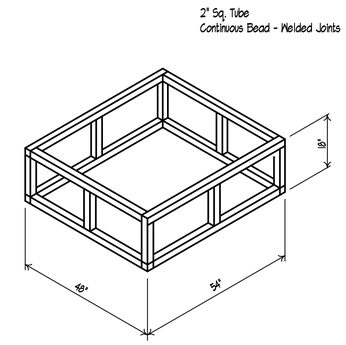

AH-3 & 4 Unit Stand (Existing)

N.T.S.

KEY NOTES

M1 EXISTING DUCT TO REMAIN AS FOUND (SHOWN FOR REFERENCE ONLY)

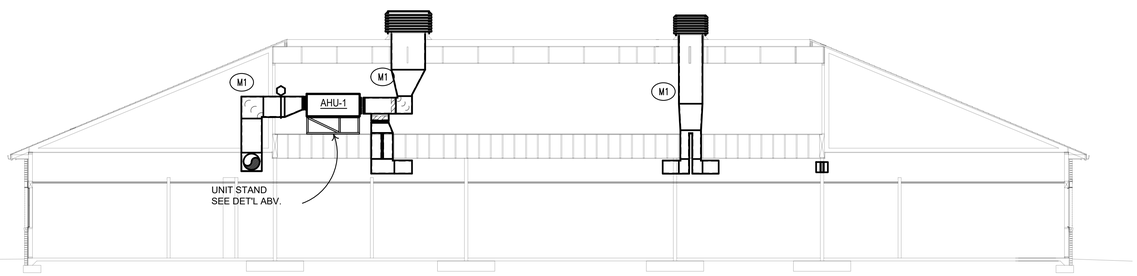

Section ' A - A '

Scale: 1/8"=1'-0"

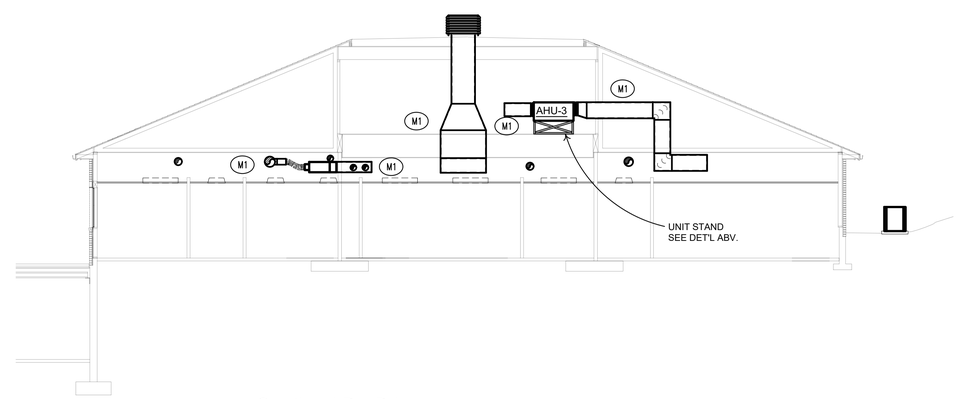

Section ' B - B '

1/8"=1'-0"

Air Systems Engineering Inc.

COMFORT SYSTEMS USA

AIR CONDITIONING
DESIGN & INSTALLATION
(253) 572-1924
SERVICE SUPPORT CONTRACTORS, WA. 98450

This drawing is the property of AIR SYSTEMS CONTRACTORS, INC. and shall not be reproduced, shown or used without prior written approval by AIR SYSTEMS CONTRACTORS, INC. The drawing is to be used only as supplementary information to the architect's drawings or specifications, or shop drawings for the specified equipment. Any other use or reproduction is prohibited without written consent of AIR SYSTEMS CONTRACTORS, INC.

SEAL

City of Puyallup
Development Building Services
ISSUED PERMIT

Building	Planning
Engineering	Public Works
Fire	Traffic

PRMH20260023

PROJECT

PUYALLUP MEDICAL BUILDING
REPLACE (3) SPLIT SYSTEMS

222 15th AVE SE
PUYALLUP, WA 98372

REVISIONS

1 PLAN REVIEW COMMENTS

DATE
JANUARY 15, 2026

ASEI NO.
X13477

DRAWN BY: BSR DESIGN BY: JW/TK

REVIEWED BY:

SHEET TITLE
HVAC SECTIONS

© COPYRIGHT 2025 - ASEI, INC. ALL RIGHTS RESERVED

SHEET

M-2

OF 3