GENERAL NOTES

I. GENERAL REQUIREMENTS:

1. ALL WORKMANSHIP AND MATERIALS SHALL BE IN STRICT ACCORDANCE WITH THE MOST RECENT EDITION OF THE FOLLOWING CODES/STANDARDS: 2015 UNIFORM PLUMBING CODE, NATIONAL ELECTRIC CODE,NFPA AND ALL LOCAL ORDINANCES.
2. PLUMBING CONTRACTOR SHALL VISIT THE JOB SITE AND THOROUGHLY FAMILIARIZE HIMSELF WITH ALL EXISTING CONDITIONS.
3. ALL MATERIALS SHALL BE NEW UNLESS OTHERWISE SHOWN OR SPECIFIED.
4. ALL WORK SHALL BE PERFORMED BY A LICENSED PLUMBING CONTRACTOR IN A FIRST CLASS WORKMANSHIP LIKE MANNER. THE COMPLETED SYSTEM SHALL BE FULLY OPERATIVE. ALL EXCAVATION AND BACK FILL AS REQUIRED FOR THIS PHASE OF CONSTRUCTION SHALL BE A PART OF THIS CONTRACT.
5. REQUIRED INSURANCE SHALL BE PROVIDED BY THE PLUMBING CONTRACTOR FOR PROTECTION AGAINST PUBLIC LIABILITY AND PROPERTY DAMAGE FOR THE DURATION OF THE WORK.
6. PLUMBING CONTRACTOR SHALL SECURE AND PAY FOR ALL PERMITS, FEES, INSPECTION AND TESTS, PLUMBING CONTRACTOR TO OBTAIN PERMIT AND APPROVED SUBMITTALS PRIOR TO BEGINNING WORK OR ORDERING EQUIPMENT. PLUMBING CONTRACTOR MUST BE PRESENT FOR ALL INSPECTIONS OF HIS WORK BY REGULATORY AUTHORITIES.
7. DRAWINGS ARE DIAGRAMMATIC. DO NOT SCALE FOR THE EXACT LOCATION OF FIXTURES, PIPING, EQUIPMENT, ETC.
8. NOT ALL SYMBOLS MENTIONED HERE ARE USED IN THIS PROJECT.
9. ALL QUESTIONS MUST BE SUBMITTED IN RFI FORMAT TO THE ARCHITECT AND MUST BE ADDRESSED BY THE APPROPRIATE DESIGNER OF RECORD PROIR TO BECOMING A PROPOSED CHANGE ORDER.
10. THE FRANCHISE BRAND STANDARDS DESIGN DOCUMENT SHALL BE CONSIDER AS AN INTEGRAL PART OF THE CONSTRUCTION DOCUMENTS. ALL CONTRACTORS SHALL ENSURE THEY OBTAIN, READ, AND FAMILIARIZE THEMSELVES WITH THE BRAND STANDARD DOCUMENT BEFORE BIDDING AND ALSO THROUGHOUT THE CONSTRUCTION STAGES. IF THERE ARE ANY DISCREPANCIES BETWEEN THE CONSTRUCTION DOCUMENTS AND THE FRANCHISE BRAND STANDARDS, THE CONTACTOR SHALL ISSUE AN RFI TO THE AOR AND EOR.

II. DIVISION OF WORK:

1. VERIFY LOCATION, SIZE, DIRECTION OF FLOW AND INVERTS OF ALL EXISTING UTILITIES PRIOR TO BEGINNING OF CONSTRUCTION. ADVISE ENGINEER OF ANY DISCREPANCIES.
2. ALL FIXTURES MUST BE PROVIDED WITH READILY ACCESSIBLE STOPS AND APPROPRIATELY MARKED ACCESS PANELS. COORDINATE LOCATIONS WITH GENERAL CONTRACTOR PRIOR TO INSTALLATION.
3. PLUMBING CONTRACTOR SHALL GUARANTEE ALL MATERIALS AND WORKMANSHIP FREE FROM DEFECTS FOR A PERIOD OF NOT LESS THAN ONE (1) YEAR FROM DATE OF ACCEPTANCE BY OWNER. CORRECTION OF ANY DEFECTS SHALL BE COMPLETED WITHOUT ADDITIONAL CHARGE AND SHALL INCLUDE REPLACEMENT OR REPAIR OF ANY OTHER PHASE OF THE INSTALLATION WHICH MAY HAVE BEEN DAMAGED.
4. ALL CONTROL VALVES SHALL BE TAGGED AND MARKED. A REPRODUCIBLE DIAGRAM LOCATING ALL VALVES SHALL BE PROVIDED FOR OWNER/OPERATOR.
5. DOMESTIC WATER PRESSURE TO FIXTURES SHALL NOT EXCEED 80 PSI. WHEREVER THE SUPPLY PRESSURE EXCEEDS 80 PSI THE PLUMBING CONTRACTOR SHALL PROVIDE A PRESSURE REDUCING VALVE TO MAINTAIN SUCH PRESSURE BELOW 80 PSI. PLUMBING CONTRACTOR SHALL ALSO OBTAIN READOUT OF AVAILABLE PRESSURE FOR THE PROJECT PRIOR TO THE WATER METER CONNECTION, AND NOTIFY THE ENGINEER WHENEVER THE PRESSURE DROPS BELOW 60 PSI.
6. CONTRACTOR SHALL PERFORM A WATER TEST TO DETERMINE WATER CHEMISTRY PRIOR TO ANY WORK OR PIPING INSTALLATION AND SHALL SUBMIT TEST RESULTS TO ENGINEER FOR REVIEW AND APPROVAL.
7. PLUMBING CONTRACTOR IS TO EMPLOY THE SERVICES OF THE G.C. FOR CUTTING AND PATCHING OF WALLS, FLOORS & CEILINGS RELATED TO THE INSTALLATION OF PLUMBING EQUIPMENT & SYSTEMS.

III. MATERIALS:

1. WATER DISTRIBUTION PIPING TO BE PEX UPONOR (OR) APPROVED EQUAL FOR BUILDING AND CPVC FOR OTHER AREAS OF THE BUILDING.
2. DIELECTRIC COUPLINGS ARE REQUIRED BETWEEN ALL DISSIMILAR METAL IN PIPING AND EQUIPMENT CONNECTIONS.
3. ALL CONDENSATE DRAIN PIPING SHALL BE TYPE PVC WITH ARMAFLEX INSULATION WHERE USED IN A RETURN AIR PLENUM PVC PIPING WITH ARMAFLEX INSULATION MAY BE USED IN LOCATIONS WHERE ALLOWED BY LOCAL CODES. SEE PLUMBING DRAWINGS FOR SIZE AND LOCATION OF PIPING.
4. WATER PIPING INSULATION SHALL BE ARMAFLEX OR EQUAL INSTALLED IN ACCORDANCE WITH MANUFACTURERS INSTRUCTIONS FOR ALL HOT WATER PIPING. WHERE DOMESTIC WATER TEMPERATURES CAN CAUSE SWEATING.
5. MANIFOLD WATER SUPPLY SYSTEM IS DESIGNED FOR GUEST ROOM. CPVC PIPE WILL BE USED FOR MAIN WATER PIPE BEFORE MANIFOLDS AND PEX PIPE WILL CONNECT TO EACH FIXTURE DOWNSTREAM OF THE MANIFOLDS THE HANGERS USED WILL BE A ONE NAIL SOIUX CHIEF HANGER OR A Z NAIL SUSPENSION CLAMP.
6. PROVIDE HANGERS & SUPPORTS APPROVED FOR USE BY 2015 UNIFORM PLUMBING CODE.

IV. COORDINATION:

1. ALL WORK SHALL BE COORDINATED WITH OTHER TRADES TO AVOID INTERFERENCE WITH THE PROGRESS OF CONSTRUCTION. REPORT ANY DISCREPANCY TO ENGINEER/ARCHITECT PRIOR TO BEGINNING OF CONSTRUCTION.
2. PLUMBING CONTRACTOR TO REFER TO ARCHITECTURAL DRAWINGS FOR MOUNTING HEIGHTS OF PLUMBING FIXTURES.
3. NO COMBUSTIBLE MATERIAL TO BE USED IN MECHANICAL ROOMS OR IN CEILING SPACES WHERE USED AS RETURN AIR PLENUMS.
4. NO WATER, SANITARY OR DRAINAGE PIPING PERMITTED IN ELECTRICAL OR ELEVATOR EQUIPMENT ROOMS.
5. PIPING SHOULD BE COORDINATED WITH ALL STRUCTURAL FOOTINGS AND FOUNDATIONS. PIPE SHOULD BE OFFSET TO AVOID CONTACT WITH FOOTINGS AND FOUNDATION WALLS. IF PIPING MUST RUN UNDERNEATH A FOOTING OR THROUGH A FOUNDATION WALL, THE PIPE MUST BE INSTALLED WITH A RELIEVING ARCH OR IN A PIPE SLEEVE.

V. EXECUTION:

1. SOIL,WASTE,VENT AND RAINWATER PIPING MATERIAL TO COMPLY WITH 2015 UNIFORM PLUMBING CODE. PVC CAN BE USED AS PREFERRED CHOICE. GAS PIPE SHOULD BE SCHEDULE 40 METALLIC AND POLYETHYLENE PIPE FOR BELOW GRADE INSTALLATION.
2. FURNISH AND INSTALL APPROVED WATER HAMMER ARRESTORS FOR ALL (GROUP) PLUMBING FIXTURES, SIZED AND LOCATED PER MANUFACTURER'S INSTALLATION INSTRUCTIONS.
3. ISOLATE COPPER PIPE FROM HANGER OR SUPPORTS WITH ISOLATOR PADS OR MATERIAL.
4. ALL FIRE RATED FLOOR AND WALL PENETRATIONS SHALL BE PROPERLY PROTECTED FROM FIRE, SMOKE AND WATER PENETRATION BY FILLING VOIDS BETWEEN PIPE AND WALL/FLOOR SLEEVES WITH FIRE RATED FOAM, TO ACHIEVE THE SAME RATING AS WALLS OR FLOORS AS PART OF THE PLUMBER'S WORK.
5. PROVIDE ACCESS PANELS FOR ALL CONCEALED VALVES AND ALL WATER HAMMER ARRESTORS. ACCESS PANELS IN RATED WALLS MUST MAINTAIN THE SAME RATING AND MUST MATCH THE FINISH OF THE WALL IN WHICH IT IS INSTALLED.
6. PROVIDE COMBINATION COVER PLATE AND CLEANOUTS PLUG OR ACCESS PANEL FOR ALL WALL CLEANOUTS FINISH TO MATCH FIXTURE TRIM.
7. CONDENSATE LINES SHALL NOT DRAIN ON THE ROOFING SYSTEM OR ANY OF ITS COMPONENTS AND CONDENSATE LINES NEED NOT COMPLY WITH MIN. CLEARANCE REQUIREMENTS.
8. PROVIDE ANGLE STOPS ON ALL WATER SERVICE LINES TO FIXTURES FOR SHUTTING-OFF INDIVIDUAL.
9. ALL HORIZONTAL RAINWATER PIPING THAT RECEIVES CONDENSATE DISCHARGE FROM AIR CONDITIONING EQUIPMENT SHALL BE INSULATED WITH 1" THK.ARMAFLEX.
10. AIR ADMITTANCE VALVES ARE NOT PERMITTED IN LIEU OF CONVENTIONAL VENTING WITHIN THESE DRAWINGS.AIR ADMITTANCE VALVES SHALL ONLY BE USED FOR ISOLATED PLUMBING FIXTURES (E.G. AN ISLAND KITCHEN SINK).AIR ADMITTANCE VALVES ARE MECHANICAL DEVICES.
11. P.C. RESPONSIBLE FOR EXECUTING ALL CODE REQUIRED TESTS AND INSPECTIONS,INCLUDING BUT NOT LIMITED TO, LEAK & PRESSURE TESTING OF GAS, WASTE, VENT & WATER PIPING AND SANITIZING OF WATER PIPING.
12. ANY NOTCHING, DRILLING, BORING OR OTHER ALTERATION TO BUILDING STRUCTURE SHALL BE PERFORMED IN A CODE APPROVED METHOD AND NOT THREATEN THE INTEGRITY OF THE BUILDING STRUCTURE.
13. SUPPORT ALL PIPING IN ACCORDANCE WITH 2015 UNIFORM PLUMBING CODE. ANY SUSPENDED MATERIALS SHALL BE DIRECTLY SUPPORTED BY THE BUILDING STRUCTURE.
14. CLEANOUT PLUGS SHALL BE INSTALLED IN ACCORDANCE WITH 2015 UNIFORM PLUMBING CODE REQUIREMENTS. PROVIDE CLEANOUTS AS PLANS INDICATED AND AT THE BASE OF ALL WASTE STACKS, AT EVERY FOUR 45 DEGREE TURNS, AT EVERY 100 FEET, AND AT THE BASE OF ALL ROOF LEADERS. CLEANOUTS SHALL BE PLACED IN READILY ACCESSIBLE LOCATIONS.

LEGEND

SYMBOL	DESCRIPTION
	GATE VALVE
	CHECK VALVE
	BALANCING VALVE (TYPICAL)
	BALL VALVE
	PRESSURE REGULATOR
	SHUT-OFF VALVE
	FLOOR DRAIN
	CLEANOUT
	SANITARY SEWER PIPING
	STORM WATER PIPING
	VENT PIPING
	DOMESTIC COLD WATER PIPING
	HOT WATER PIPING 120F
	HOT WATER RETURN 120F PIPING
	HOT WATER PIPING 140F
	HOT WATER RETURN 140F PIPING
	GAS PIPING
	CONDENSATE PIPE
	PIPE RISE UP
	PIPE DOWN OR DROP
	CAPPED END OF PIPE
	GAS WATER HEATER
	EXPANSION TANK
CW - X	COLD WATER RISER DESIGNATION
HW - X	HOT WATER RISER DESIGNATION
S - X	SANITARY RISER DESIGNATION
V - X	VENT RISER DESIGNATION

DRAWING INDEX

PLUMBING

SHEET NUMBER	SHEET NAME	CURRENT REVISION DATE	CURRENT REVISION DESCRIPTION
P-001	GENERAL NOTES AND LEGENDS	2020.02.21	ISSUED FOR PERMIT
P-002	PEX GENERAL NOTES (A)	2020.02.21	ISSUED FOR PERMIT
P-003	PEX GENERAL NOTES (B)	2020.02.21	ISSUED FOR PERMIT
P-101	DETAILS-1	2020.02.21	ISSUED FOR PERMIT
P-102	DETAILS-2	2020.06.03	ADDENDUM #1
P-103	DETAILS-3	2020.02.21	ISSUED FOR PERMIT
P-201A	1ST FLOOR WATER & GAS SUPPLY PLAN-A	2020.02.21	ISSUED FOR PERMIT
P-201B	1ST FLOOR WATER & GAS SUPPLY PLAN-B	2020.02.21	ISSUED FOR PERMIT
P-202A	1ST FLOOR SANITARY & VENT PLAN-A	2020.06.03	ADDENDUM #1
P-202B	1ST FLOOR SANITARY & VENT PLAN-B	2020.02.21	ISSUED FOR PERMIT
P-203A	2ND FLOOR WATER & GAS SUPPLY PLAN-A	2020.02.21	ISSUED FOR PERMIT
P-203B	2ND FLOOR WATER & GAS SUPPLY PLAN-B	2020.02.21	ISSUED FOR PERMIT
P-204A	2ND FLOOR SANITARY & VENT PLAN-A	2020.02.21	ISSUED FOR PERMIT
P-204B	2ND FLOOR SANITARY & VENT PLAN-B	2020.02.21	ISSUED FOR PERMIT
P-205A	3RD FLOOR WATER & GAS SUPPLY PLAN-A	2020.02.21	ISSUED FOR PERMIT
P-205B	3RD FLOOR WATER & GAS SUPPLY PLAN-B	2020.02.21	ISSUED FOR PERMIT
P-206A	3RD FLOOR SANITARY & VENT PLAN-A	2020.02.21	ISSUED FOR PERMIT
P-206B	3RD FLOOR SANITARY & VENT PLAN-B	2020.02.21	ISSUED FOR PERMIT
P-207A	4TH FLOOR WATER & GAS SUPPLY PLAN-A	2020.02.21	ISSUED FOR PERMIT
P-207B	4TH FLOOR WATER & GAS SUPPLY PLAN-B	2020.02.21	ISSUED FOR PERMIT
P-208A	4TH FLOOR SANITARY & VENT PLAN-A	2020.02.21	ISSUED FOR PERMIT
P-208B	4TH FLOOR SANITARY & VENT PLAN-B	2020.02.21	ISSUED FOR PERMIT
P-209A	5TH FLOOR WATER & GAS SUPPLY PLAN-A	2020.02.21	ISSUED FOR PERMIT
P-209B	5TH FLOOR WATER & GAS SUPPLY PLAN-B	2020.02.21	ISSUED FOR PERMIT
P-210A	5TH FLOOR SANITARY & VENT PLAN-A	2020.02.21	ISSUED FOR PERMIT
P-210B	5TH FLOOR SANITARY & VENT PLAN-B	2020.02.21	ISSUED FOR PERMIT
P-211A	ROOF PLUMBING PLAN-A	2020.02.21	ISSUED FOR PERMIT
P-211B	ROOF PLUMBING PLAN-B	2020.02.21	ISSUED FOR PERMIT
P-301A	UNIT WATER SUPPLY PLAN-A	2020.02.21	ISSUED FOR PERMIT
P-301B	UNIT WATER SUPPLY PLAN-B	2020.02.21	ISSUED FOR PERMIT
P-302A	UNIT SANITARY & VENT PLAN-A	2020.06.03	ADDENDUM #1
P-302B	UNIT SANITARY & VENT PLAN-B	2020.02.21	ISSUED FOR PERMIT
P-303	UNIT WATER SUPPLY & SANITARY PLAN	2020.06.03	ADDENDUM #1
P-304A	UNIT WATER SUPPLY RISER DIAGRAM-A	2020.02.21	ISSUED FOR PERMIT
P-304B	UNIT WATER SUPPLY RISER DIAGRAM-B	2020.02.21	ISSUED FOR PERMIT
P-305A	UNIT SANITARY & VENT RISER DIAGRAM-A	2020.06.03	ADDENDUM #1
P-305B	UNIT SANITARY & VENT RISER DIAGRAM-B	2020.02.21	ISSUED FOR PERMIT
P-306	UNIT WATER SUPPLY & SANITARY RISER DIAGRAM	2020.06.03	ADDENDUM #1
P-307	WATER SUPPLY RISER DIAGRAM	2020.02.21	ISSUED FOR PERMIT
P-308	SANITARY & VENT RISER DIAGRAM	2020.06.03	ADDENDUM #1
P-309	STORM WATER RISER DIAGRAM	2020.02.21	ISSUED FOR PERMIT
P-310	GAS SUPPLY RISER DIAGRAM	2020.02.21	ISSUED FOR PERMIT
P-401	SCHEDULE	2020.06.03	ADDENDUM #1

THE APPROVED CONSTRUCTION PLANS, DOCUMENTS AND ALL ENGINEERING MUST BE POSTED ON THE JOB AT ALL INSPECTIONS IN A VISIBLE AND READILY ACCESSIBLE LOCATION.

FULL SIZED LEDGIBLE COLOR PLANS ARE REQUIRED TO BE PROVIDED BY THE PERMITEE ON SITE FOR INSPECTION

Approval of submitted plans is not an approval of omissions or oversight by this office or noncompliance with any applicable regulations of local government. The contractor is responsible for making sure that the building complies with all applicable building codes and regulations of the local government.

Reviewed for Building Code Compliance

By Janelle Montgomery ✔

Building Permit No.	B-20-0180
Date of Approval	10/27/2020

ABBREVIATIONS

A.F.F	ABOVE FINISHED FLOOR
AHJ	AUTHORITY HAVING JURISDICTION
BFP	BACKFLOW PREVENTER
BFPA	BACKFLOW PREVENTER ASSEMBLY
BP	BOOSTER PUMP
CD	CONDENSATE DRAIN
CO	CLEANOUT
CP	RECIRCULATION PUMP
CV	CHECK VALVE
CD	DOMESTIC COLD WATER
CWFU	COLD WATER FIXTURE UNIT
DF	DRINKING FOUNTAIN
DFU	DRAINAGE FIXTURE UNIT
DN	DOWN
D	DRYER
DS	DOWN SPOUT
DW	DISHWASHER
EOR	ENGINEER OF RECORD
EWH	ELECTRIC WATER HEATER
EWS	EYE WASH STATION
ET	EXPANSION TANK
FD	FLOOR DRAIN
FOV	FULL OPEN VALVE
FS	FLOOR SINK
G	GAS
GWH	GAS WATER HEATER
GI	GREASE INTERCEPTOR
GD	GARBAGE DISPOSAL
GB	GREY BOX
GC	GENERAL CONTRACTOR
GPM	GALLON PER MINUTE
HB	HOSE BIB
HW	HOT WATER
HWR	HOT WATER RETURN
IM	ICE MACHINE
LAV	LAVATORY
LI	LINT INTERCEPTOR
OI	OIL INTERCEPTOR
ORD	OVERFLOW ROOF DRAIN
ORDL	OVERFLOW ROOF DRAIN LEADER
P.C	PLUMBING CONTRACTOR
PRV	PRESSURE REDUCING VALVE
PG	PRESSURE GAUGE
RD	ROOF DRAIN
RDL	ROOF DRAIN LEADER
REF	REFRIGERATOR
REG	REGULATOR
RPZ	REDUCED PRESSURE ZONE
SNK	SINK
S	SANITARY SEWER
SHR	SHOWER
SP	SUMP PUMP
TMV	THERMOSTATIC MIXING VALVE
TUB	BATHTUB
TP	TRAP PRIMER
URL	URINAL
V	VENT
VTR	VENT THRU ROOF
W	WASHER
WCO	WALL CLEANOUT
WM	WASHING MACHINE
WCL	WATER CLOSET
WCR	WATER COOLER
WBF	WATER BOTTLE FILLER

BASE4
2901 CLINT MOORE ROAD, #114
BOCA RATON, FLORIDA 33496
888.901.8008 www.base-4.com

RICARDO J. MUNIZ-GUILLET,AIA
5453 NW 106TH DR
CORAL SPRINGS, FL 33076

MEP ENGINEER
GARRY VERMAAS PhD, PE
2183 S BERRYS CHAPEL ROAD
FRANKLIN, TN 37069

Seal:

GARRY W. VERMAAS
STATE OF WASHINGTON
44860
REGISTERED
PROFESSIONAL ENGINEER

DATE: 2020.06.19
GARRY VERMAAS, PhD, PE
2183 S BERRYS CHAPEL ROAD
FRANKLIN TN 37069

Owner:

Dakota Legacy Group
-Hospitality Development-
4500 36TH AVE. S SUITE
200, FARGO, ND 58104
701.551.8000 (OFFICE)

HOMEWOOD SUITES BY HILTON

3500 S MERIDIAN, PUYALLUP, WA 98373

PROTOTYPE VERSION: V9.2 2014 FEB

ISSUE NO.	DELTA	ISSUE DATE	DESCRIPTION
1	P0	2020.02.21	ISSUED FOR PERMIT

CURRENT ISSUE

ISSUED FOR PERMIT

CURRENT ISSUE DATE
2020.02.21

DRAWN BY
NAT

CHECKED BY
GWV

PROJECT NO.
B4-124-1803

SHEET NAME

GENERAL NOTES AND LEGENDS

DRAWINGS NO.

P-001

PEX GENERAL NOTES

UPONOR AQUAPEX UV RESISTANCE RATINGS

Product	Marking	UV Resistance
Uponor AquaPEX White	5106	1 month
Uponor AquaPEX Blue	5206	3 month
Uponor AquaPEX Red	5206	3 month

NOTE: UPONOR AQUAPEX PURPLE RECLAIMED WATER PIPE HAS NOT BEEN TESTED FOR UV RESISTANCE AND THEREFORE RETAINS A 5006 RATING.

HYDROSTATIC TEMPERATURE AND PRESSURE RATING FOR UPONOR AQUAPEX PIPING.

ASTM F876 Temperature and Pressure Ratings for SDR9 PEX		
Rated Temperature	Hydrostatic Design Stress (HDS) psi	Pressure Rating for Water psi
73.4°F/23°C	630	160
180°F/82°C	400	100
200°F/93°C	315	80

THESE LISTINGS ARE PUBLISHED IN PPI TR-4, A CULMINATION REPORT OF THE LISTINGS THAT ARE MAINTAINED WITH PPI.

STANDARDS, CODES, AND LISTINGS

STANDARDS:
UPONOR AQUAPEX PIPING, PROPEX EP FITTINGS, PROPEX LF BRASS FITTINGS, EP MULTIPORT PRODUCTS, EP VALVES AND COPPER VALVED MANIFOLDS ARE MANUFACTURED AND TESTED TO MEET THE FOLLOWING REQUIREMENTS:

Standard	Specification
ASTM F876	Standard Specification for Cross-linked Polyethylene (PEX) Piping
ASTM F877	Standard Specification for Cross-linked Polyethylene (PEX) Plastic Hot and Cold Water Distribution Systems
ASTM F1960	Standard Specification for Cold Expansive Fittings with PEX Reinforcing Rings for Use with Cross-linked Polyethylene (PEX) Piping
ASTM F2023	Standard Test Method for Evaluating the Oxidative Resistance of Cross-linked Polyethylene (PEX) Piping and Systems to Hot Chlorinated Water
ASTM F2657	Standard Test Method for Outdoor Weathering Exposure of Cross-linked Polyethylene (PEX) Piping
ASTM E84	Standard Test Method for Surface Burning Characteristics of Building Materials
ASTM E119	Standard Test Method for Materials fire Test of Building Construction and Materials
ASTM E814	Standard Test Method for Materials fire Test of Through penetration Firestop Systems
CAN/CSA B137.5	Cross-linked Polyethylene (PEX) Piping System for Pressure Application
CAN/CSA B214	Installation Code of Hydronic Heating System
CAN/ULC-S102.2	Standard Test Method for Surface Burning Characteristics of Flooring, Floor Covering and Miscellaneous Materials and Assemblies
CAN/ULC-S101	Standard Method of Fire Endurance Test of Building, construction and Materials
CAN/ULC -S115	Standard Method of Fire Tests of firestop Systems
CAN/ULC/ ORD-C199P	Combustibble Piping for Sprinkler Systems
ANSI/NSF Standard 14	Plaster Piping System Components and Related Materials
ANSI/NSF Standard 61	Drinking Water System Components - Health Effects
ANSI/NSF Standard 359	Valves for Cross-linked Polyethylene (PEX) Water Distribution Systems
AWWA C904	Cross-linked Polyethylene (PEX) Pressure Pipe, 1/2" (12mm) through 3" (76mm) for Water Service
ANSI/UL 263	Standard for Safety for Fire Test of Building Construction and Materials
UL 1821	Standard for Safety for Thermoplastic Sprinkler Pipe and Fitting for Fire Protection Service (NFPA 13D applications only)
UL 2846	Standard for Safety for Fire Test of Plastic Water Distribution Plumbing Pipe for Visible Flame and Smoke Characteristics
ASME B16.5	Pipe Flanges and Flanged Fittings NPS through NPS 24 Metric/Inch Standard

CODES
ICC, IPC, IMC, IRC, UPC, UMC, NSPC, HUD, UFGS, NPC OF CANADA, NBC OF CANADA

LISTINGS
CNSFUS-FS, CNSFUS-RFH, CNSFUS-PW, CQAIUS, UL, CSA, WH, ETL, PPI-TR-4, ICC-ES-PMG, IAPMO, BMEC, CCMC

UPONOR PROPEX FITTINGS

UPONOR PROPEX FITTINGS ARE AVAILABLE IN BOTH ENGINEERED POLYMER (EP) AND LEAD-FREE (LF) BRASS AND ARE TESTED AND LISTED TO ASTM F1960 AND CAN/CSA B137.5

UPONOR PROPEX LEAD-FREE (LF) BRASS FITTINGS
ALL UPONOR LF BRASS PRODUCTS COMPLY WITH NSF/ANSI 61 ANNEX G, NSF/ANSI 372 AND CONFORM TO THE LEAD-CONTENT REQUIREMENTS FOR "LEAD-FREE" PLUMBING AS DEFINED BY CALIFORNIA, VERMONT, MARYLAND AND LOUISIANA STATE LAWS AS WELL AS THE U.S. SAFE DRINKING WATER ACT, EFFECTIVE JANUARY 2014.

ALL UPONOR LF BRASS FITTINGS MARKED AS NSFUS-PW-G COMPLY WITH THE
DEZINCIFICATION RESISTANCE (DZR) AND STRESS CORROSION CRACKING (SCC)
REQUIREMENTS OF SECTIONS 5.8.1 AND 5.8.2 PER THE CURRENT NSF 14 STANDARD.

UPONOR'S LF BRASS IS APPROVED FOR DIRECT BURIAL IN SOIL PER NSF/ANSI STANDARD 14 TESTING WHICH ESTABLISHED MINIMUM PERFORMANCE CRITERIA FOR DZR/SCC RESISTANCE FOR PEX FITTINGS INTENDED FOR POTABLE
WATER.

**NOTE: UPONOR DOES NOT PERMIT A PRESS-TYPE FITTING TO BE USED WITH PROPEX SWEAT OR FITTING SWEAT ADAPTERS. BRASS MATERIAL IS NOT NEARLY
AS MALLEABLE AS COPPER MATERIAL, CAUSING UNDO STRESS AND AFFECTING
THE INTEGRITY OF THE CONNECTION**

MINIMUM DISTANCE BETWEEN PROPEX FITTINGS

TO ENSURE A PROPER PROPEX CONNECTION, FOLLOW THE REQUIRED MINIMUM DISTANCE BETWEEN FITTINGS CHART.

Nominal Fitting Size	Cut Length of Pipe
½"	2"
¾"	3"
1"	3½"
1¼"	4½"
1½"	4½"
2"	6"
2½"	7½"
3"	9"

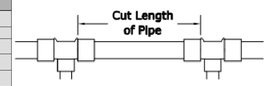

RECOMMENDED NUMBER OF EXPANSIONS FOR 3/8" TO 3" PIPING AT 73.4° F (23° C)

Piping Size	Milwaukee ProPEX Tool			Uponor ProPEX Tool		
	M12	M12	FORCELOGIC	MANUAL	100/150	201
3/8"	8	9	-	5	7	-
½"	5	6	-	4	4	-
¾"	9	8	-	9	9H	-
1"	12	5	-	14	7H	-
1¼"	-	7	-	-	7H	-
1½"	-	6	-	-	8H	-
2"	-	-	4	-	-	5H
2½"	-	-	5	-	-	-
2½"	-	-	7	-	-	-

NOTE: "H" IN THE TABLE REFERS TO UPONOR H-SERIES EXPANDER HEADS.

FIRE STOPPING SOLUTIONS

THERE IS A WIDE RANGE OF FIRE STOPPING SOLUTIONS THAT HAVE BEEN TESTED AND LISTED WITH PEX PIPE; INCLUDING INTUMESCENT CAULKS, WRAP STRIPS, PASS-THROUGH DEVICES, COLLARS AND CAST-IN-PLACE SLEEVES. SOME FIRE STOP MANUFACTURERS INCLUDE, BUT ARE NOT LIMITED TO, 3M™, HILTI®, RECTORSEAL®, PASSIVE FIRE PROTECTION PARTNERS, SPECIFIED TECHNOLOGIES INC., HOLDRITE® AND PROSET SYSTEMS®.

FIRE ASSEMBLY DOCUMENTATION AND LISTINGS SHALL BE OBTAINED FROM THE SELECTED FIRE STOP SOLUTION MANUFACTURER. MOST OF THE FIRES STOP
MANUFACTURERS HAVE SYSTEM SELECTOR TOOLS OR NAVIGATORS ON THEIR
WEBSITES TO EASILY RESEARCH AND FIND A LISTING THAT MATCHES THE SPECIFIED CONSTRUCTION.

ASTM E84 - SURFACE BURNING CHARACTERISTICS

(RETURN-AIR PLENUMS ASTM E84)
UPONOR PEX-A PIPING SYSTEMS COMPRISED OF UPONOR PEX-A PIPE, UPONOR PROPEX RINGS, UPONOR EP FITTINGS, UPONOR LF BRASS FITTINGS AND UPONOR PEX-A PIPE SUPPORT PRODUCTS ARE LISTED FOR INSTALLATION IN
RETURN-AIR PLENUMS AS TESTED IN ACCORDANCE WITH ASTM E84.

Classified as to Surface Burning Characteristics			
ASTM E84	Flame Spread	Smoke Developed	Limitations
Nominal 1⁄2" to 3⁄4" size	25 or less	50 or less	Adjacent pipe runs shall be located at least 18" apart.
3" maximum nominal size Uponor PEX-a Supported with Uponor PEX-a Pipe Support	25 or less	50 or less	Pipe or fitting sections without PEX-a Pipe Support must be covered with a rated insulation per Table 3-5. There is no minimum length of PEX-a Pipe Support segments.
3" maximum nominal size Uponor PEX-a with 1⁄2" insulation	25 or less	50 or less	1/2" minimum thickness insulation as specified in Table 3-5.

UPONOR AQUAPEX ASTM E84 REQUIREMENTS

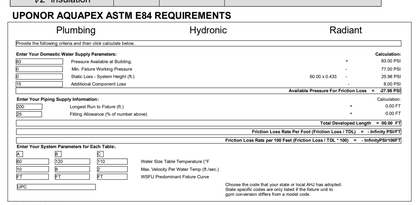

QAI P321-1
GUIDELINES: 1/2" THROUGH 3/4" (UNINSULATED)
LIMITATIONS: ADJACENT RUNS SHALL BE LOCATED AT LEAST 18" APART

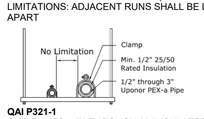

QAI P321-1
GUIDELINES: 1/2" THROUGH 3" (INSULATED)
LIMITATIONS: 1/2" MINIMUN THICKNESS INSULATION AS SPECIFIED

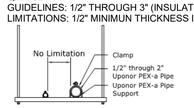

QAI P321-2
GUIDELINES: 1/2" THROUGH 3" (PEX-A PIPE SUPPORT)
PIPE OR FITTING SECTIONS WITHOUT PEX-A PIPE SUPPORT MUST BE COVERED WITH A RATED INSULATION. THERE IS NO MINIMUM LENGTH OF PEX-A PIPE SUPPORT SEGMENTS.

UPONOR AQUAPEX DESIGN PARAMETERS
DOMESTIC COLD-WATER PIPING
- MAXIMUM VELOCITY OF 12 FT/SEC. THROUGH PIPE
- RECOMMENDED VELOCITY OF 10 FT/SEC. THROUGH PIPE
  DOMESTIC HOT-WATER PIPING
- MAXIMUM VELOCITY OF 12 FT/SEC. THROUGH PIPE
- RECOMMENDED VELOCITY OF 8 FT/SEC. THROUGH PIPE
- MAXIMUM OPERATING TEMPERATURE OF 200 DEG F (93.3 DEG C)
  DOMESTIC HOT-WATER RETURN PIPING
- MAXIMUM VELOCITY OF 2 FT/SEC. THROUGH PIPE
- MAXIMUM OPERATING TEMPERATURE OF 140 DEG F (60 DEG C)

NOTES:
UPONOR ALLOWS THE DEDICATED FIXTURE SUPPLY PIPE TO BE OF THE SAMENOMINAL SIZE AS THE FIXTURE BEING SUPPLIED, PROVIDED THE DEDICATED PIPE IS NO LONGER THAN 25 LINEAR FEET FROM A UNIFORM-FRICTION-LOSS-SIZED PIPE.

Uponor Allows The Use Of 12" Pipe For Domestic Hot-Water ReturnPiping Provided A Flow-Control Device Is In Place To Maintain Velocities At Or Below 2 Ft/Sec.

RECIRCULATED HOT-WATER SYSTEM DESIGN

UPONOR AQUAPEX PIPING IS TESTED AND LISTED TO PEX 5106 NSF-PW (CL5). PER ASTM F876, THE CL5 CHLORINE RESISTANCE RATING IS INTENDED FOR AN END-USE CONDITION OF 100% AT 140°F/60°C. UPONOR REQUIRES THAT THE VELOCITY OF THE RECIRCULATION PIPING SHALL NOT EXCEED 2 FT./SEC AND THE SYSTEM MUST BE BALANCED PROPERLY. SEE UPONOR'S PLUMBING DESIGN ASSISTANCE MANUAL OR ASPE PLUMBING ENGINEERING DESIGN HANDBOOK VOLUME 2 FOR MORE INFORMATION.

Nominal Pipe Size	Velocity (ft/sec)	Flow Rate (gpm)	Friction Loss per Foot at 120°F/48.9ºC
1⁄2"	2	1.1	0.0195
3⁄4"	2	2.2	0.0126
1"	2	3.6	0.0092
1 1⁄4"	2	5.4	0.0072
1 1⁄2"	2	7.5	0.0059
2"	2	12.9	0.0042
2 1⁄2"	2	19.8	0.0033
3"	2	28.1	0.0026

REVERSE OSMOSIS AND DE-IONIZED WATER SYSTEMS

REVERSE-OSMOSIS SYSTEMS AND SYSTEMS USING DE-IONIZED WATER WITH A PH BETWEEN 5 AND 8 AND A MAXIMUM TEMPERATURE OF 104 DEG F(40 DEG C) ARE APPROVED FOR USE WITH UPONOR AQUAPEX PIPING.UPONOR REQUIRES THE USE OF ENGINEERED POLYMER (EP) OR STAINLESS-STEEL FITTINGS WITH THESE SYSTEMS.

BUNDLING

PARALLEL RUNS OF UPONOR PEX MAY BE BUNDLED TOGETHER GIVEN THE FOLLOWING GUIDELINES:
- ENTIRE BUNDLE MUST BE SUPPORTED AT THE REQUIRED O.C. DISTANCES.
- CABLE TIES MAY BE USED TO MAINTAIN A TIGHT BUNDLE OF PEX.
- CABLE TIES MAY NOT BE USED AS THE SOLE MEANS OF SUPPORTING THE BUNDLE.
- KEEP HOT AND COLD BUNDLES 6" APART IF UNINSULATED.

THERMAL EXPANSION AND CONTRACTION

HORIZONTAL TUBING RUNS
THERMAL EXPANSION FORCES ON SUSPENDED HORIZONTAL RUNS OF PEX-A TUBING THAT CAN EXPERIENCE A 22 ºC (40ºF) OR GREATER RISE IN TEMPERATURE SHALL BE CONTROLLED BY A MEANS OF MITIGATING TEMPERATURE-INDUCED STRESSES TO OTHER PARTS OF THE WATER DISTRIBUTION SYSTEM. MEANS FOR CONTROLLING THERMAL EXPANSION INCLUDE:
- SUPPORTING THE TUBING WITH CONTINUOUS RUNS OF UPONOR PEX-A PIPE SUPPORT
- RIGID ANCHOR POINTS INSTALLED EVERY 20 M (65 FT.)
- PROPER STRAPPING (E.G. 27 KG (60 LB.) STRAPS OR EQUIVALENT) SPACED 1 M (3 FT.) AND RATED FOR THE MAXIMUM TEMPERATURE AND UV EXPOSURE OF THE PEX-A TUBING APPLICATION.
- LOOPS
- OFFSETS
- ARMS WITH RIGID ANCHOR POINTS

VERTICAL TUBING RUNS

THERMAL EXPANSION FORCES ON VERTICAL RUNS OF PEX-A TUBING THAT PASSES THROUGH MORE THAN ONE FLOOR AND CAN EXPERIENCE A 22°C (40°F) OR GREATER RISE IN TEMPERATURE SHALL BE CONTROLLED BY INSTALLING:
- A RISER CLAMP AT THE TOP OF EVERY OTHER FLOOR; AND
- MID-STORY GUIDES TO MAINTAIN THE ALIGNMENT OF THE VERTICAL TUBING.

NOTE: INSTALLING RISER CLAMPS ISOLATES EXPANSION TO TWO-FLOOR INTERVALS ALLOWING THE PEX-A TUBING TO NATURALLY COMPENSATE FOR THE EXPANSION.

ABOVE-GROUND AND SUSPENDED APPLICATIONS

SMALLER DIAMETER (3/8" TO 1") PIPE RUNS REQUIRE AN EXTRA 1/8" TO 3/16" OF LONGITUDINAL CLEARANCE PER FOOT OF RUN. DO NOT ALLOW PIPING TO DIP EXCESSIVELY BETWEEN SUPPORTS AND DO NOT PULL PIPING TIGHT DURING INSTALLATION.

LARGER SUSPENDED COMMERCIAL SYSTEMS ARE OFTEN DESIGNED TO INCLUDE A NUMBER OF CHANGES IN DIRECTION. THESE DIRECTIONAL CHANGES CAN BE A BENEFICIAL ASPECT IN THE PIPING SYSTEM BY CREATING A SPRING-LIKE EFFECT, WHICH SAFELY ABSORBS AND CONTROLS THERMAL EXPANSION AND CONTRACTION.

CONTROLLING EXPANSION IN HOT-WATER SYSTEMS

BEST PRACTICE FOR CONTROLLING EXPANSION FORCES IS TO CONTINUOUSLY RESTRAIN THE PIPE BY INSTALLING UPONOR PEX-A PIPE SUPPORT. DOMESTIC COLD WATER SYSTEMS DO NOT TYPICALLY EXPERIENCE THE TEMPERATURE DIFFERENTIALS SEEN IN DOMESTIC HOT WATER SYSTEMS, THEREFORE REQUIRING FEWER FIXED ANCHOR POINTS. PEX-A PIPE SUPPORT SHALL BE INSTALLED IN ACCORDANCE WITH THE INSTALLATION GUIDELINES IN THE PDAM.

STRAPPING SHALL BE:
- NYLON COATED STAINLESS-STEEL WITH A MINIMUM TENSILE RATING OF 300-LBS.
- RATED FOR OPERATING TEMPERATURE RANGES, INCLUDING HIGH TEMPERATURES.
- UV-RESISTANT TO WITHSTAND EXPECTED LIFE OF THE PIPING SYSTEM.
  TO ACCOUNT FOR EXPANSION, FIXED ANCHOR POINTS SHALL BE USED TO RESTRICT PIPING MOVEMENT. FIXED ANCHOR POINTS SHALL BE:
- INSTALLED EVERY 65 FT.
- CONSTRUCTED WITH MATERIALS THAT PROVIDE RIGIDITY.
- UTILIZE A PIPE CLAMP THAT WILL RESTRAIN PIPING MATERIAL.
- INSTALLED WITHIN 18" OF A FIRE-RATED WALL PENETRATION.

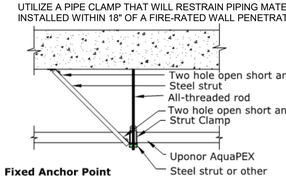

Fixed Anchor Point

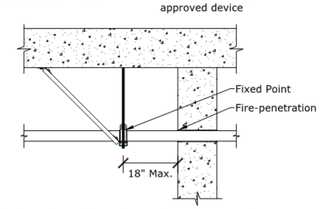

Fixed Anchor Point - Fire-rated Wall Penetration

EXPANSION AND CONTRACTION: RISERS
VERTICAL PIPING RUNS MUST COMPLY WITH SUPPORT SPACING AS DEFINED BY CODE. BEST PRACTICE IS THE UTILIZE THE FLOOR ASSEMBLY AS AN ANCHOR POINT FOR CONTROLLING EXPANSION AND CONTRACTION BY MEANS OF RISER CLAMPS. DO THIS BY UTILIZING AN ADDITIONAL RISER CLAMP AT THE TOP OF THE FLOOR ASSEMBLY AS LISTED BELOW:
- DOMESTIC HOT WATER: TOP OF EVERY-OTHER FLOOR.
- DOMESTIC COLD WATER: TOP OF EVERY FOURTH FLOOR

THERMAL EXPANSION IN UNDERGROUND APPLICATIONS
FOR DIRECT-BURIAL APPLICATIONS, MITIGATE THE EFFECTS OF THERMAL EXPANSION BY INCORPORATING PROPER INSTALLATION TECHNIQUES THAT PROVIDE ADEQUATE RESISTANCE TO AXIAL STRESS.PER PPI TR-21 THERMAL EXPANSION AND CONTRACTION IN PLASTIC PIPING SYSTEMS, A BURIED OR CONCRETE-ENCASED PIPE IS EFFECTIVELY RESTRAINED AGAINST BOTH LATERAL AND AXIAL MOVEMENT BY SURROUNDING
EMBEDMENT MATERIAL. THE MAGNITUDE OF THE FRICTIONAL RESTRAINING FORCE IS DEPENDENT ON THE NATURE OF THE SOIL AND ON INSTALLATION AND OPERATING CONDITIONS. FOR EXAMPLE, THE EXTENT OF COMPACTION NEAR THE PIPE CAN AFFECT THE QUALITY OF CONTRACT BETWEEN THE PIPE AND SURROUNDING SOIL. THE ANCHORING OR RESTRAINING EFFECT OF SURROUNDING SOIL ON PIPE MOVEMENT CAN BE SIGNIFICANTLY AUGMENTED BY EXTERNAL PIPE GEOMETRY. TEES, LATERAL CONNECTIONS AND CHANGES IN DIRECTION ALL HELP TO ANCHOR A PIPE IN THE SURROUNDING SOIL.BECAUSE THE FRICTION BETWEEN THE PIPE AND SURROUNDING MATERIAL IS GENERALLY SUFFICIENT TO ARREST AXIAL PIPE MOVEMENT, A BURIED PIPE THAT IS SUBJECT TO TYPICAL FLUCTUATIONS IN THE TEMPERATURE OF THE FLUID IT CONVEYS OR OF THE SOIL THAT SURROUNDS IT IS ONLY SUBJECT TO MODEST AXIAL THERMAL STRESSES THAT ARE WELL WITHIN THE STRENGTH CAPABILITIES OF THE PIPE.

BENDING PEX

THE MINIMUM BEND RADIUS OF UPONOR AQUAPEX PIPING IS SIX (6) TIMES THE OUTSIDE DIAMETER. BEND SUPPORTS ARE AVAILABLE FOR 3⁄8", 1/2", 3/4" AND 1" PIPING AND MAY BE USED TO FACILITATE 90 DEGREE RIGID BENDS. LARGE DIAMETER PVC CONDUIT CAN BE USED TO FACILITATE 90 DEGREE BENDS IN LARGER DIAMETER UPONOR AQUAPEX PIPING. TO ALLEVIATE STRESS ON PROPEX CONNECTIONS AND FITTINGS, DO NOT CHANGE DIRECTION IMMEDIATELY AFTER A PROPEX CONNECTION. UPONOR RECOMMENDS A MINIMUM OF TWO TIMES THE OUTSIDE DIAMETER (O.D.) OF THE PIPE AS THE MINIMUM DISTANCE BEFORE CHANGING DIRECTION.

NOTE: WHEN MINIMUM DISTANCE CANNOT BE ACHIEVED WITH A BEND SUPPORT, USE A PROPEX ELBOW. UPONOR RECOMMENDS THE USE OF ELBOWS IN SIZES 1 1/4" AND LARGER FOR DIRECTIONAL CHANGES UNLESS ADEQUATE SPACE IS AVAILABLE FOR A PROPER BEND.

Pipe Size (in)	Pipe O.D. (in)	Min. Bend radius (in)	2 x O.D. (in)
1/2"	0.625"	3 3/4"	1 1/4"
3/4"	0.875"	5 1/4"	1 3/4"
1"	1.125"	6 3/4"	2 1/4"

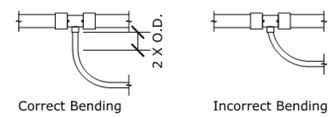

SUPPORTING UPONOR PEX PIPE, FITTINGS, AND VALVES

SUSPENDED RUNS OF UPONOR PEX PIPE CAN BE SUPPORTED BY THE SAME CONVENTIONAL MEANS AS METALLIC PIPE, USING COPPER TUBE SIZE (CTS) HANGERS AND SUPPORTS. HOWEVER, SUPPORT SPACING WILL VARY DEPENDING ON LOCAL CODE REQUIREMENTS.

NOTE: UPONOR RECOMMENDS USING HANGERS AND SUPPORTS DESIGNED FOR USE WITH PLASTIC PIPING.

Nominal Pipe Size	Spacing for Bare PEX (Dimension A)			Spacing w/PEX-a Pipe Support (Dimension B)		
	International Plumbing Code (IPC)	Uniform Plumbing Code (UPC)	National Plumbing Code of Canada (NPCC)	International Plumbing Code (IPC)	Uniform Plumbing Code (UPC)	National Plumbing Code of Canada (NPCC)
1/2"	32"	32"	32"	6'-0"	6'-0"	6'-0"
3/4"	32"	32"	32"	6'-0"	6'-0"	6'-0"
1"	32"	32"	32"	8'-0"	8'-0"	8'-0"
1 1/4"	32"	48"	32"	8'-0"	8'-0"	8'-0"
1 1/2"	32"	48"	32"	8'-0"	8'-0"	8'-0"
2"	32"	48"	32"	8'-0"	8'-0"	8'-0"
2 1/2"	32"	48"	32"	8'-0"	8'-0"	8'-0"
3"	32"	48"	32"	8'-0"	8'-0"	8'-0"

UPONOR SPACING REQUIREMENTS

Horizontal Support Spacing Requirements for Uponor PEX Pipe:

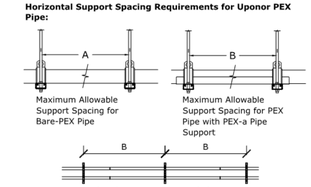

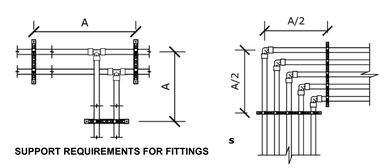

SUPPORT REQUIREMENTS FOR FITTINGS

SUPPORT REQUIREMENTS FOR FITTINGS AT CORNERS

B-20-0180
City of Puyallup

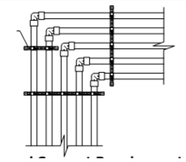

ADDITIONAL SUPPORT REQUIREMENTS FOR FITTINGS AT CORNERS

CORNER SUPPORT EXAMPLE
DISTANCE G = 16"
TOTAL DISTANCE FOR G = 32"
(16 + 16)
DISTANCE H = > 16"
TOTAL DISTANCE FOR H = > 32"

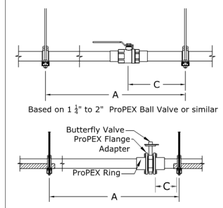

Nominal Pipe Size	Dimension "C"
	All Codes
1/2"	-
3/4"	-
1"	-
1 1/4"	18"[1]
1 1/2"	18"[1]
2"	18"[1]
2 1/2"	7"[2]
3"	7"[2]

BASED ON 2 1/2" TO 3" DUCTILE-IRON BUTTERFLY VALVES OR SIMILAR

NOTE: IF DIMENSION C CANNOT BE MET ADDITIONAL SUPPORT SHALL BE ADDED.

UPONOR PEX-A PIPE SUPPORT

PEX-A PIPE SUPPORT IS A SELF-GRIPPING, GALVANIZED-STEEL CHANNEL FOR PEX PIPING. IT PROVIDES CONTINUOUS, UNINTERRUPTED SUPPORT OF PEX-A PIPING, ALLOWING PLACEMENT OF HANGERS SIMILAR TO THAT OF METALLIC PIPING.
PEX-A PIPE SUPPORT MAY BE INSULATED WITH TYPICAL CTS (COPPER TUBE SIZE) PIPE INSULATION AND IS AVAILABLE IN 9-FOOT (3M) LENGTHS IN 1/2"-3" SIZES.

Uponor PEX-a Pipe support Installation Guidelines

Nominal Pipe Size	Max. Support Spacing (A)	Max .Cantilever (B)	Min. Overlap (C)	Min. Distance to Fitting (D)	Min. Overhang (E)
1/2"	6'-0"	18"	6"	1 3/4"	1"
3/4"				1 3/4"	
1"	8'-0"			2 1/4"	
1 1/4"				2 3/4"	
1 1/2"				3"	
2"				4"	
2 1/2"				5"	
3"				6"	

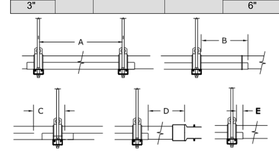

STRAPPING REQUIREMENTS FOR PEX-A PIPE SUPPORT
UPONOR REQUIRES PEX-A PIPE SUPPORT BE STRAPPED WITH A MINIMUM 300-LB., TENSILE-RATED, STAINLESS-STEEL STRAP THAT IS SUITABLE FOR THE APPLICATION (I.E. UV, HIGH TEMPERATURE).

STRAPPING REQUIREMENTS FOR CLAMPS AND HANGERS

Support	Maximum Distance
Clamps	Greater than 48" = 1 strap mid-span
Hangers	• Less than 48" = 2 straps equally spaced • Greater than 48" = 3 straps (1 mid-span and 1 on each end placed 2" from end of support)

STRAPPING PEX-A PIPE SUPPORT

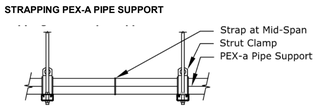

STRAPPING FOR SYSTEMS USING STRUT-CLAMPS OR EQUIVALENT

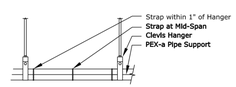

BASE4
2901 CLINT MOORE ROAD, #114
BOCA RATON, FLORIDA 33496
888.901.8008 www.base-4.com

RICARDO J. MUNIZ-GUILLET,AIA
5453 NW 106TH DR
CORAL SPRINGS, FL 33076

MEP ENGINEER
GARRY VERMAAS PhD, PE
2183 S BERRYS CHAPEL ROAD
FRANKLIN, TN 37069

Seal:
DATE: 2020.06.19
GARRY VERMAAS, PhD, PE
2183 S BERRYS CHAPEL ROAD
FRANKLIN TN 37069

Owner:
Dakota Legacy Group
-Hospitality Development-
4500 36TH AVE. S SUITE
200, FARGO, ND 58104
701.551.8000 (OFFICE)

HOMEWOOD SUITES BY HILTON
3500 S MERIDIAN, PUYALLUP, WA 98373

PROTOTYPE VERSION: V9.2 2014 FEB

ISSUE NO.	DELTA	ISSUE DATE	DESCRIPTION
1	P0	2020.02.21	ISSUED FOR PERMIT

CURRENT ISSUE
ISSUED FOR PERMIT

CURRENT ISSUE DATE
2020.02.21

DRAWN BY
NAT

CHECKED BY
GWV

PROJECT NO.
B4-124-1803

SHEET NAME
PEX GENERAL NOTES (A)

DRAWINGS NO.
P-002

PEX GENERAL NOTES

STRAPPING FOR SYSTEMS USING CLEVIS-TYPE HANGERS OR EQUIVALENT

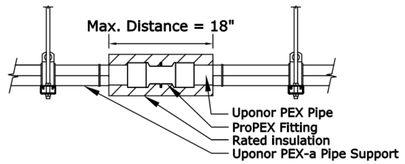

PEX-A PIPE SUPPORT INSTALLIONS IN ASTM E84 APPLLICATIONS

ASTM E84 REQUIREMENTS FOR PEX-A PIPE SUPPORT
UPONOR PEX-A PIPE SUPPORT HAS BEEN TESTED AND APPROVED FOR USE IN ASTM E84 APPLICATIONS. TO MEET THE REQUIREMENTS, PEX-A PIPE SUPPORT MUST BE INSTALLED PER THE FOLLOWING REQUIREMENTS:
- PIPE OR FITTINGS WITHOUT PEX-A PIPE SUPPORT SHALL BE COVERED WITH A MINIMUM 1 2" THICK INSULATION.
- THERE IS NO MINIMUM SEGMENT LENGTH OF PEX-A PIPE SUPPORT

WHEN INSTALLED PER THE ABOVE REQUIREMENTS, THERE ARE NO SPACING LIMITATIONS BETWEEN PARALLEL PIPING RUNS.

NOTES:
THE ABOVE REQUIREMENTS ALSO APPLY TO PEX-A PIPE SUPPORT INSTALLED IN A VERTICAL POSITION FOR ASTM E84 APPLICATIONS. EXPOSED SECTIONS OF 1/2" AND 3/4" UPONOR PEX PIPE CAN BE INSTALLED
UN-INSULATED IF THE PIPE RUNS ARE SEPARATED BY A MINIMUM OF 18"

EXPANSION AND CONTRACTION CONTROL WITH PEX-A PIPE SUPPORT
WHEN PROPERLY INSTALLED, UPONOR PEX-A PIPE SUPPORT CAN REDUCE LINEAR EXPANSION AND CONTRACTION BY UP TO 93% WHEN COMPARED TO BARE-PEX PIPE. REFER TO THE FOLLOWING REQUIREMENTS.
- 300-LB, TENSILE-RATED, STAINLESS-STEEL STRAPS
- FIXED ANCHOR POINTS INSTALLED EVERY 65 FT. FOR DOMESTIC HOT WATER APPLICATIONS.
- FIXED ANCHOR POINTS INSTALLED EVERY 150 FT. FOR DOMESTIC COLD-WATER APPLICATIONS.

PIPING SUPPORTS: GENERAL GUIDELINES
- UPONOR RECOMMENDS USING PLASTIC OR METAL PIPING SUPPORTS DESIGNED FOR USE WITH PLASTIC PIPING.
- ALLOW FOR THE LINEAR EXPANSION RATE OF UPONOR AQUAPEX PIPING APPROXIMATELY 1.1" (28 MM) PER 10°F (5.6°C) TEMPERATURE CHANGE FOR EVERY 100' OF PIPING.
- WHEN INSTALLING PIPING RUNS, THERMAL EXPANSION CALLS FOR AN EXTRA 1/8" TO 3/16" OF LONGITUDINAL CLEARANCE PER FOOT OF RUN. DO NOT ALLOW PIPING TO DIP EXCESSIVELY BETWEEN SUPPORTS. DO NOT PULL PIPING TIGHT DURING INSTALLATION.
- ALLOW ADEQUATE CLEARANCE BETWEEN PEX PIPING AND THE STRUCTURE (BORED HOLES OR SLEEVES) TO ALLOW PIPING TO MOVE FREELY DUE TO THERMAL EXPANSION AND CONTRACTION.
- TO ENSURE LIMITED MOVEMENT OF MULTI-PORT TEES DUE TO FLOWING WATER, INSTALL A PIPE SUPPORT WITHIN 6 INCHES OF THE MULTI-PORT TEE ON THE SUPPLY PIPE RUN.

SUPPORTING UPONOR MULTIPORT TEES

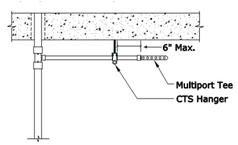

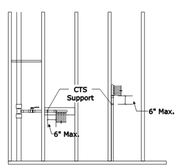

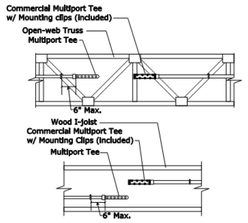

SUPPORT MULTIPORT TEES WITHIN 6" FOR ALL INSTALLATION APPLICATIONS.

VERTICAL SUPPORT REQUIREMENTS

		Nominal Pipe Size	International Plumbing Code (IPC)	Uniform Plumbing Code (UPC)	National Plumbing Code of Canada
Vertical	In wall	All Pipe Sizes	5'-0" (1.5m)	5'-0" (1.5m)	5'-0" (1.5m)
	Risers	All Pipe Sizes	Base of each floor; provide mid-story guide	Base of each floor; provide mid-story guide	Supported at the base and floor levels of alternate stories

VERTICAL SUPPORT REQUIREMENTS CONT...

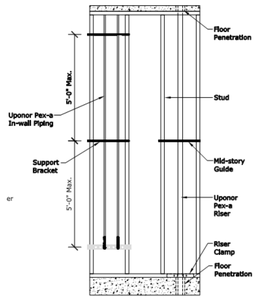

In-wall versus Riser Piping

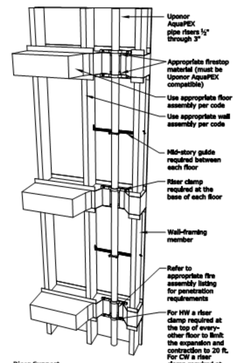

Riser Support

STORING AND HANDLING PEX

ALTHOUGH NOT COMPREHENSIVE, THE FOLLOWING HIGHLIGHTS THE MOST COMMON GUIDELINES WHEN STORING AND HANDLING UPONOR AQUAPEX:
- DO NOT STORE PEX PIPING OUTDOORS.
- KEEP PEX PIPING IN THE ORIGINAL PACKAGING UNTIL TIME OF INSTALLATION.
- INSTALL UPONOR SYSTEMS ACCORDING TO THE INSTALLATION INSTRUCTIONS. FAILURE TO FOLLOW THE INSTRUCTIONS AND INSTALLATION GUIDELINES IN THIS MANUAL CAN RESULT IN THE FAILURE OF UPONOR SYSTEMS.
- DO NOT USE UPONOR AQUAPEX PIPING WHERE TEMPERATURES AND PRESSURES EXCEED RATINGS.
- DO NOT USE OR STORE UPONOR AQUAPEX WHITE PIPING WHERE IT WILL BE EXPOSED TO DIRECT SUNLIGHT FOR MORE THAN 30 DAYS.
- DO NOT USE OR STORE UPONOR AQUAPEX RED AND BLUE PIPING WHERE IT WILL BE EXPOSED TO DIRECT SUNLIGHT FOR MORE THAN 90 DAYS.
- DO NOT WELD, GLUE OR USE ADHESIVES OR ADHESIVE TAPE WITH UPONOR AQUAPEX PIPING.

NOTE: YOU MAY TEMPORARILY AFFIX ADHESIVE TAPE TO UPONOR AQUAPEX PIPING DURING INSTALLATION. HOWEVER, TO PROTECT THE INTEGRITY OF THE SYSTEM, THE TAPE SHOULD NOT BE PERMANENT. REMOVE THE TAPE AND RESIDUAL ADHESIVE AFTER COMPLETING THE INSTALLATION.
- DO NOT APPLY OPEN FLAME TO UPONOR AQUAPEX PIPING.
- DO NOT INSTALL UPONOR AQUAPEX PIPNG WITHIN SIX INCHES OF ANY GAS APPLIANCE VENTS. ONE EXCEPTION IS DOUBLE-WALL B-VENTS, WHICH HAVE A MINIMUM CLEARANCE OF ONE INCH.
- DO NOT INSTALL UPONOR AQUAPEX PIPING WITHIN 12" OF ANY RECESSED LIGHT FIXTURE UNLESS THE PEX PIPING LINE IS PROTECTED WITH SUITABLE INSULATION OR THE CAN LIGHT IS INSULATION CONTACT (I.C.) RATED.
- DO NOT INSTALL UPONOR AQUAPEX WITHIN 5 FT. OF DIRECT VIEW FROM FLUORESCENT LIGHTING WITHOUT SLEEVING THE PIPE WITH A UV-BLOCKING MATERIAL.
- DO NOT USE UPONOR AQUAPEX PIPING TO CONVEY NATURAL GAS.
- DO NOT SOLDER, BRAZE, WELD OR FUSION-WELD WITHIN 18" OF ANY UPONOR AQUAPEX PIPING IN THE SAME WATER LINE. MAKE ANY HEAT-RELATED CONNECTIONS PRIOR TO MAKING THE PROPEX CONNECTION.
- DO NOT INSTALL UPONOR AQUAPEX PIPING BETWEEN THE TUB/SHOWER VALVE AND TUB SPOUT.
- DO NOT USE UPONOR AQUAPEX PIPING FOR AN ELECTRICAL GROUND.
- DO NOT SPRAY ON OR ALLOW ORGANIC CHEMICALS, STRONG ACIDS OR STRONG
  BASES TO COME INTO CONTACT WITH UPONOR AQUAPEX PIPING.
- DO NOT USE PETROLEUM OR SOLVENT BASED PAINTS, GREASES OR SEALANTS ON UPONOR AQUAPEX PIPING.
- USE ONLY APPROVED AND APPROPRIATE FIRESTOP MATERIALS WITHIN UPONOR AQUAPEX PIPING.
- DO NOT ALLOW RODENTS, INSECTS OR OTHER PESTS TO COME INTO CONTACT WITH UPONOR AQUAPEX PIPING.
- DO NOT SUBJECT UPONOR AQUAPEX PIPING TO BLUNT IMPACT.
- DO NOT INSTALL UPONOR AQUAPEX PIPING IN SOIL ENVIRONMENTS CONTAMINATED WITH SOLVENTS, FUELS, ORGANIC COMPOUNDS, PESTICIDES OR OTHER DETRIMENTAL MATERIALS THAT MAY CAUSE PERMEATION, CORROSION, DEGRADATION OR STRUCTURAL FAILURE OF THE PIPING. WHERE SUCH CONDITIONS ARE SUSPECTED, PERFORM A CHEMICAL ANALYSIS OF THE SOIL OR GROUNDWATER TO ASCERTAIN THE ACCEPTABILITY OF UPONOR AQUAPEX PIPNG FOR THE SPECIFIC INSTALLATION. CHECK LOCAL CODES FORADDITIONAL REQUIREMENTS.
- DO NOT PRESS PROPEX BRASS FITTINGS (I.E. COPPER PRESS).
- AQUAPEX PIPING PASSING THROUGH DRILLED OR NOTCHED METAL STUDS OR JOISTS OR HOLLOW SHELL MASONRY WALLS SHALL BE PROTECTED FROM ABRASION BY ELASTOMERIC OR PLASTIC SLEEVES OR GROMMETS.

NOTE: WHEN TRANSITIONING FROM PEX TO OTHER PIPING MATERIALS, FOLLOW THE APPROPRIATE INSTALLATION INSTRUCTIONS FOR THAT PRODUCT.

STRAPPING REQUIREMENTS FOR UPONOR AQUAPEX PIPE RUNS
- STEEL STRAPS MUST BE COATED OR HAVE NO SHARP EDGES.
- CABLE TIES SHALL NOT BE USED FOR SUSPENSION ALONE.
- PIPING SHALL BE ISOLATED FROM OTHER MEP SYSTEMS BY MEANS OF INSULATION OR STAND-OFF BRACKETS.
- FOR HOT-WATER APPLICATIONS, UPONOR RECOMMENDS A STRAPPING MATERIAL SUITABLE FOR THE APPLICATION (I.E. UV, HIGH TEMPERATURE)
- APPROVED STRAPPING MATERIALS INCLUDE:
- PIPE TALONS
- CLAMPS
- STAND-OFF BRACKETS
- NYLON BANDING AND CABLE TIES (50 LB. MIN.) SUITED FOR THE APPLICATION

UNDER-SLAB/ BELOW-GRADE FITTINGS
UPONOR AQUAPEX, EP, AND LF BRASS FITTINGS ARE ALL APPROVED FOR USE IN DIRECT-BURIAL APPLICATIONS.
UPONOR'S LF BRASS IS APPROVED FOR DIRECT BURIAL IN SOIL PER NSF/ANSI STANDARD 14 TESTING WHICH ESTABLISHED MINIMUM PERFORMANCE CRITERIA FOR DEZINCIFICATION RESISTANCE (DZR) AND STRESS-CORROSION CRACKING (SCC) RESISTANCE FOR PEX FITTINGS INTENDED FOR POTABLE WATER.

PRE-INSULATED UPONOR AQUAPEX PIPING PRE-INSULATED UPONOR AQUAPEX PIPING IS APPROVED FOR USE IN DIRECT BURIAL APPLICATIONS. HOWEVER, DUE TO THE STATIC LOAD EXERTED BY THE SOIL, UPONOR RECOMMENDS THE USE OF PRE-INSULATED AQUAPEX FEATURING 1" THICK INSULATION.
WHEN PIPING WILL PASS THROUGH A CONCRETE SLAB, IT MUST BE PROTECTED AND ALLOWED TO MOVE INCLUDING EXPANSION AND CONTRACTION OF PIPING. MINIMUM WALL THICKNESS OF PROTECTIVE MATERIAL SHALL BE 0.025 INCH (.064MM). APPROVED PROTECTIVE MATERIAL INCLUDES HDPE WRAPPING, CLOSED-CELL PIPE INSULATION, PVC ELBOWS AND SLEEVES, OR EQUIVALENT. ENSURE PROPER PLACEMENT WHERE PIPING EXITS THE SLAB. THESE PRODUCTS ARE DESCRIBED AS SLAB PENETRATION PROTECTION DEVICES.

PRE-SLEEVED UPONOR AQUAPEX PIPING
WHEN USING PRE-SLEEVED UPONOR AQUAPEX PIPING OR A PROTECTION SLEEVE, AN ANNULAR GAP BETWEEN THESE PROTECTION DEVICES AND THE PEX PIPING WILL EXIST. IN SUCH INSTALLATIONS, THE ANNULAR GAP BETWEEN THE PROTECTION DEVICE AND THE PEX PIPING AT THE EXPOSED ENDS MUST BE FILLED TO HELP PREVENT PATHWAYS FOR PESTS AND THE MISTAKEN APPLICATION OF HARMFUL CHEMICALS INTO THE SPACE BETWEEN THE PEX PIPING AND THE PROTECTION DEVICE. USE ONLY SEALANTS THAT ARE COMPATIBLE WITH PEX PIPING.

NOTE: THE FOLLOWING PRODUCTS CAN BE USED WHEN SEALING PEX PIPING AND SLAB-PENETRATION PROTECTION DEVICES:
- LATEX CAULK
- LATEX FOAM
- SILICONE SEALANT
- POLYURETHANE EXPANDING FOAM

WATER SERVICE REQUIREMENTS

UPONOR AQUAPEX PIPING AND ASSOCIATED FITTINGS MEET THE REQUIREMENTS OF AMERICAN WATER WORKS ASSOCIATION (AWWA) C904, CROSS-LINKED POLYETHYLENE (PEX) PRESSURE PIPE, ½" (12MM) THROUGH 3" (76MM) FOR WATER SERVICE.

ONLY USE SDR9 COMPRESSION FITTINGS LISTED IN COMPLIANCE WITH AWWA C800 AS REFERENCED IN AWWA C904 IN WATER SERVICE APPLICATIONS WHEN TRANSFERRING FROM PEX TO A CORPORATION OR CURB STOP. BE SURE TO USE INSERT STIFFENERS WHEN ASSEMBLING A COMPRESSION FITTING WITH PEX. COMMONLY AVAILABLE SDR9 COMPRESSION FITTING MANUFACTURERS INCLUDE:
- FORD METER BOX COMPANY, INC.®
- MUELLER COMPANY®
- A.Y. MCDONALD MFG. CO.®
- PHILMAC®

WATER SYSTEM DISINFECTION

UPONOR RECOMMENDS FLUSHING AN AQUAPEX PLUMBING SYSTEM WITH CLEAN, POTABLE WATER. WHEN SYSTEM DISINFECTION IS REQUIRED, UPONOR AQUAPEX PIPING SHOULD BE DISINFECTED IN ACCORDANCE WITH AWWA C651-86, STANDARD FOR DISINFECTING WATER MAINS, OR LOCAL CODES.

IMPORTANT: TO PREVENT REDUCED SERVICE LIFE OF SYSTEM COMPONENTS, DISINFECTION SOLUTIONS SHOULD NOT STAND IN THE SYSTEM LONGER THAN 24 HOURS. FLUSH THE SYSTEM WITH POTABLE WATER AFTER DISINFECTION. USE A CHLORINE SOLUTION OF 50 PARTS PER MILLION (PPM) FOR 24 HOURS OR 200 PPM FOR THREE HOURS FOR DISINFECTION.

PRESSURE-TESTING PROCEDURES

IT IS IMPORTANT TO PROPERLY PRESSURE TEST AN UPONOR PLUMBING SYSTEM IN ACCORDANCE WITH LOCAL CODE. IF TESTING WITH AIR, IT IS IMPORTANT THAT THE SYSTEM PRESSURE NOT EXCEED 120 PSI.

IMPORTANCE OF CONDITIONING PEX-A PIPE
UPONOR RECOMMENDS CONDITIONING THE SYSTEM AT 1.5 TIMES THE TEST PRESSURE, OR 120 PSI. SEE UPONOR INSTALLATION MANUAL FOR PROPER CONDITIONING PROCEDURE.

PRINT STREAM IDENTIFICATION

Print Stream on Tubing	Explanation
UPONOR AquaPEX	Brand NAme
PEX 5006	ASTM F2023 Testing I/A/W ASTM F876
2 IN	Tubing Size (Example: 2')
SDR9	Standard Dimentional Ratio of 9
B137.5 POTABLE	Potable Water Listing by CSA
cNSFus-pw	Potable Water Listing by NSF
	Listing by UL
U.P. Code	Uniform Plumbing Code Marketing
CCMC 13529-R	Canadian Construction Materials Centre Evaluation Report 13529-R
ASTM F876/F877/F2023	ASTM Pipe Standards
ASTM F1960/F2080/F1807/F2098	ASTM Fitting Standards
cWHlus F5205/S D50	Warnock Hersey Listing for 25/50 FS/SD Plenum Rating
ICC ESR-1099	ICC Evaluation Services Report ESR-1099
ANSI/AWWA C904	American Water Works Association Standard for Water Services
cQAlus P321	QAI Listing for 25/50 FS/FD Plenum Rating
130 PSI 120F UL 1821	UL Standard for NFPA 13D Fire Protection Services
ULC/ORD-C199 P	ULC Standard for Combustible Sprinkler Piping
IAPMO UES 0253	IAPMO Evaluation Services Report ER-0253
ASTM E84	Standard Test Method for Surface Burning Characteristics - US
CAN/ULC-5102.2	Standard Test Method for Surface Burning Characteristics - CA
HUD MR1269d	HUD Material Release Report 1269d
160PSI 73.4⁰ F (23⁰ C)/100PSI 180⁰ F(82⁰ C)/80PSI 200⁰ F(93⁰ C)	Hydrostatic Rating from PPI in Accordance with ASTM F876
UPONOR PEX-a TUBING	Type of Crosslinking (PEX-a)
UN04950127	Manufacturing code to Audit Material Source (USA, Material Type, Extruder No., Year, Month, Day)
XXXXXX	Footage Marker in Increments of 5 - feet

PEX PIPE CALCULATIONS

CALCULATION & SIZING TABLE-120° HW & HWR

Enter Your Domestic Water Supply Parameters: **Calculation:**

75	Pressure Available at Building		+	75.00 PSI
30	Min. Fixture Working Pressure		-	30.00 PSI
60	Static Loss - System Height (ft.)	60.00 x 0.433	-	25.98 PSI
0	Additional Component Loss		-	0.00 PSI

Available Pressure For Friction Loss = 19.02 PSI

Enter Your Piping Supply Information: **Calculation:**

400	Longest Run to Fixture (ft.)	+	400.00 FT
25	Fitting Allowance (% of number above)	+	100.00 FT

Total Developed Length = 500.00 FT

Friction Loss Rate Per Foot (Friction Loss / TDL) = 0.038 PSI/FT

Friction Loss Rate per 100 Feet (Friction Loss / TDL * 100) = 3.804 PSI/100FT

Enter Your System Parameters for Each Table:

A	B	C	
60	120	110	Water Size Table Temperature (°F)
10	8	2	Max. Velocity Per Water Temp (ft./sec.)
FT	FT	FT	WSFU Predominant Fixture Curve

UPC

Choose the code that your state or local AHJ has adopted. State specific codes are only listed if the fixture unit to gpm conversion differs from a model code.

Water Size Chart for Uponor AquaPEX:

Uponor AquaPEX Water Size Table
UPC - Flush Tank
100% Water @ **60°F**
3.804 PSI/100ft.
Max. Velocity = **10 ft./sec.**

Pipe Size	WSFU Range	Velocity (ft./sec.)	GPM
3/8"	0 – 0	2.10	0.63
1/2"	0 – 0	2.60	1.44
3/4"	1 – 3	3.30	3.64
1"	4 – 8	4.00	7.28
1 1/4"	9 – 16	4.60	12.51
1 1/2"	17 – 29	5.20	19.70
2"	30 – 87	6.20	40.28
2 1/2"	88 – 232	7.20	71.29
3"	233 – 450	8.10	114.04

Uponor AquaPEX Water Size Table
UPC - Flush Tank
100% Water @ **120°F**
3.804 PSI/100ft.
Max. Velocity = **8 ft./sec.**

Pipe Size	WSFU Range	Velocity (ft./sec.)	GPM
3/8"	0 – 0	2.30	0.69
1/2"	0 – 0	2.90	1.60
3/4"	1 – 4	3.70	4.08
1"	5 – 10	4.40	8.00
1 1/4"	11 – 19	5.10	13.87
1 1/2"	20 – 33	5.70	21.60
2"	34 – 103	6.80	44.18
2 1/2"	104 – 260	7.80	77.23
3"	261 – 443	8.00	112.63

Uponor AquaPEX Water Size Table
UPC - Flush Tank
100% Water @ **110°F**
3.804 PSI/100ft.
Max. Velocity = **2 ft./sec.**

Pipe Size	WSFU Range	Velocity (ft./sec.)	GPM
3/8"	0 – 0	2.00	0.60
1/2"	0 – 0	2.00	1.10
3/4"	1 – 1	2.00	2.20
1"	2 – 3	2.00	3.64
1 1/4"	4 – 6	2.00	5.44
1 1/2"	7 – 9	2.00	7.58
2"	10 – 17	2.00	12.99
2 1/2"	18 – 29	2.00	19.80
3"	30 – 49	2.00	28.16

CALCULATION & SIZING TABLE-140° HW & HWR

Enter Your Domestic Water Supply Parameters: **Calculation:**

75	Pressure Available at Building		+	75.00 PSI
30	Min. Fixture Working Pressure		-	30.00 PSI
0	Static Loss - System Height (ft.)	0.00 x 0.433	-	0.00 PSI
0	Additional Component Loss		-	0.00 PSI

Available Pressure For Friction Loss = 45.00 PSI

Enter Your Piping Supply Information: **Calculation:**

200	Longest Run to Fixture (ft.)	+	200.00 FT
25	Fitting Allowance (% of number above)	+	50.00 FT

Total Developed Length = 250.00 FT

Friction Loss Rate Per Foot (Friction Loss / TDL) = 0.180 PSI/FT

Friction Loss Rate per 100 Feet (Friction Loss / TDL * 100) = 18.000 PSI/100FT

Enter Your System Parameters for Each Table:

A	B	C	
60	140	130	Water Size Table Temperature (°F)
10	8	2	Max. Velocity Per Water Temp (ft./sec.)
FT	FT	FT	WSFU Predominant Fixture Curve

UPC

Choose the code that your state or local AHJ has adopted. State specific codes are only listed if the fixture unit to gpm conversion differs from a model code.

Water Size Chart for Uponor AquaPEX:

Uponor AquaPEX Water Size Table
UPC - Flush Tank
100% Water @ **140°F**
18.000 PSI/100ft.
Max. Velocity = **8 ft./sec.**

Pipe Size	WSFU Range	Velocity (ft./sec.)	GPM
3/8"	0 – 0	5.80	1.74
1/2"	1 – 3	7.20	3.98
3/4"	4 – 11	8.00	8.82
1"	12 – 20	8.00	14.55
1 1/4"	21 – 33	8.00	21.76
1 1/2"	34 – 54	8.00	30.31
2"	55 – 134	8.00	51.97
2 1/2"	135 – 270	8.00	79.21
3"	271 – 443	8.00	112.63

Uponor AquaPEX Water Size Table
UPC - Flush Tank
100% Water @ **130°F**
18.000 PSI/100ft.
Max. Velocity = **2 ft./sec.**

Pipe Size	WSFU Range	Velocity (ft./sec.)	GPM
3/8"	0 – 0	2.00	0.60
1/2"	0 – 0	2.00	1.10
3/4"	1 – 1	2.00	2.20
1"	2 – 3	2.00	3.64
1 1/4"	4 – 6	2.00	5.44
1 1/2"	7 – 9	2.00	7.58
2"	10 – 17	2.00	12.99
2 1/2"	18 – 29	2.00	19.80
3"	30 – 49	2.00	28.16

BASE4
2901 CLINT MOORE ROAD, #114
BOCA RATON, FLORIDA 33496
888.901.8008 www.base-4.com

RICARDO J. MUNIZ-GUILLET,AIA
5453 NW 106TH DR
CORAL SPRINGS, FL 33076

MEP ENGINEER
GARRY VERMAAS PhD, PE
2183 S BERRYS CHAPEL ROAD
FRANKLIN, TN 37069

Seal:

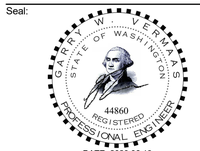

DATE: 2020.06.19
GARRY VERMAAS, PhD, PE
2183 S BERRYS CHAPEL ROAD
FRANKLIN TN 37069

Owner:

Dakota Legacy Group
-Hospitality Development-
4500 36TH AVE. S SUITE
200, FARGO, ND 58104
701.551.8000 (OFFICE)

HOMEWOOD SUITES BY HILTON
3500 S MERIDIAN, PUYALLUP, WA 98373
PROTOTYPE VERSION: V9.2 2014 FEB

ISSUE NO.	DELTA	ISSUE DATE	DESCRIPTION
1	P0	2020.02.21	ISSUED FOR PERMIT

B-20-0180
City of Puyallup

CURRENT ISSUE
ISSUED FOR PERMIT

CURRENT ISSUE DATE
2020.02.21

DRAWN BY
NAT

CHECKED BY
GWV

PROJECT NO.
B4-124-1803

SHEET NAME
PEX GENERAL NOTES (B)

DRAWINGS NO.
P-003

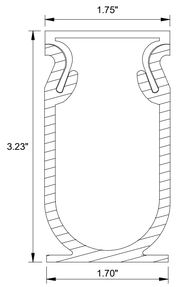

DECK DRAIN SPECIFICATIONS

1. THE FRONTIER DECK DRAIN IS A REMOVABLE TOP DRAIN THAT FEATURES A DOUBLE WALL BASE AND A SNAP IN TOP. WHEN INSTALLING THIS DRAIN, THE TOPS ARE STAGGERED PAST THE JOINTS MAKING THE JOINTS VERY RIGID. BECAUSE FRONTIER DECK DRAIN TOPS ARE REMOVABLE, THIS DRAIN IS EASY TO CLEAN AND THE TOPS CAN BE REPLACED IF EVER DAMAGED. IT IS RECOMMENDED THAT YOU DRILL AND PIN (3/8" REBAR) THE BASE AT 3 FOOT INTERVALS TO STABILIZE AGAINST ANY MOVEMENT IN THE CONCRETE SLAB.
2. MAXIMUM FLOW RATE OF 9.3 GPM PER FOOT.
3. FITTINGS CONSIST OF 45 AND 90 DEGREE ANGLES, TEES, CROSSES, END ADAPTERS, END PLUGS, DOWN ADAPTERS, AND SIDE ADAPTERS.
4. CARTON INCLUDES 80' BASE, 80' TOP CAP (WITH PROTECTIVE TAPE), 8 COUPLERS, AND 4 END ADAPTERS.
5. INSTALLATION TO BE COMPLETED IN ACCORDANCE WITH MANUFACTURERS SPECIFICATIONS.
6. FINAL COLOR SELECTION BY OWNER.

6 DECK DRAIN DETAIL
NTS

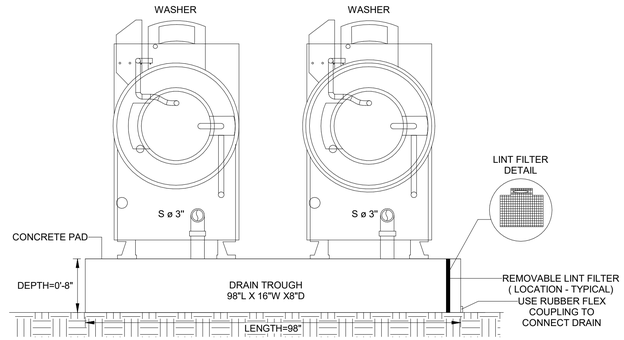

4 WASHERS AND DRAN TROUGH INSTALLATION DETAIL
NTS

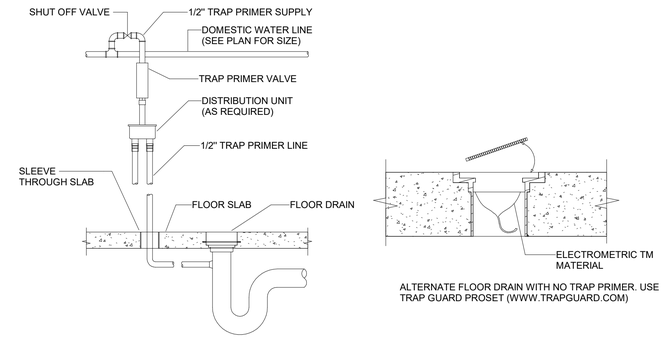

1 TRAP PRIMER & TRAP GUARD DRAIN INSERT DETAIL
NTS

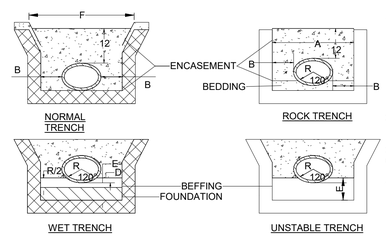

1) DIMENSIONS:
   A. MAXIMUM PAY WIDTH - O.D.PIPE +24"
   B. MAXIMUM - 6"
   C. 6" BELOW BARREL
   D. 3" BELOW BARREL
   E. DETERMINED BY ENGINEER
   F. MAXIMUM PAY WIDTH (SURFACE RESTORATION)- O.D.PIPE +36"
2) ENCASEMENT ZONE SHALL NOT CONTAIN STONE OVER 2 INCH CINDER, REFUSE, LUMBER, FROZEN EARTH, OR OTHER OBJECTIONABLE MATERIAL.
3) BEDDING MATERIAL MAY BE SAND OR GRAVEL CONTAINING
   NO STONES LARGER THAN 2 INCH SIZE.
4) FOUNDATION SHALL BE UNIFORM 1 INCH TO 1 1 / 2 INCH WASHED OR CRUSHED STONE

5 TRENCH SECTIONS FOR WATER MAINS
NTS

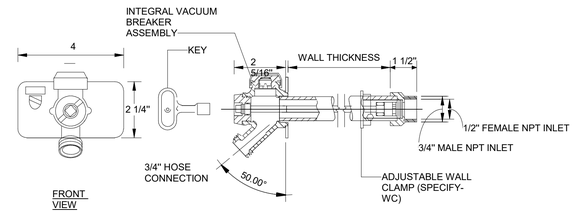

NOTE:
1. ALL HOSE BIBS SHOULD BE FREEZE PROOF IN COLD CLIMATE.

2 HOSE BIB INSTALLATION DETAIL AT POOL AND DUMPSTER
NTS

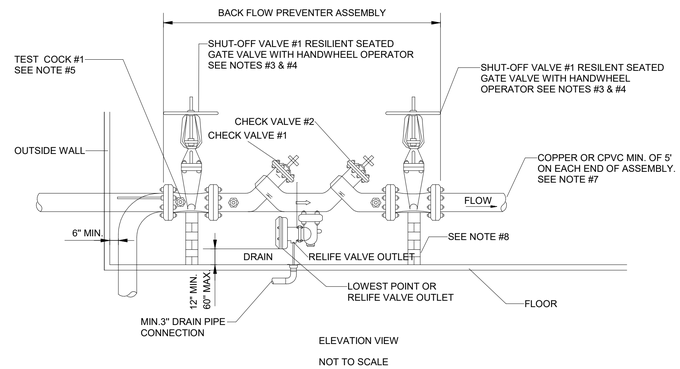

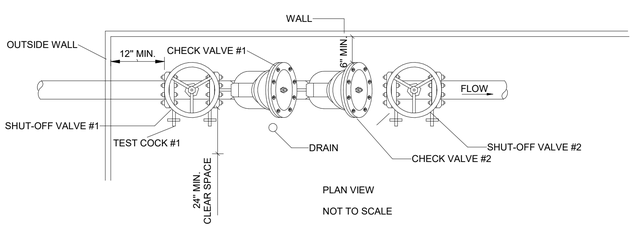

NOTES:

1. INDOOR INSTALLATION SHALL ONLY BE PERMITTED IN CASES WHERE ADEQUATE SPACE FOR THE BACKFLOW PREVENTION ASSEMBLY IS NOT AVAILABLE OUTSIDE.OWNER WILL REVIEW ON A CASE BY CASE BASIS.
2. BACK FLOW PREVENTER ASSEMBLY (BFPA).
3. APPROVED BFPA INCLUDES SHUT-OFF VALVE.
4. TEST COCK #1 SHALL BE UPSTREAM OF SHUT-OFF VALVE #1 AND IS PART OF THE APPROVED ASSEMBLY.
5. ASSEMBLIES SHALL BE INSTALLED AS UPRIGHT AND IN THE HORIZONTAL POSITION UNLESS OTHERWISE APPROVED.
6. PIPE MATERIAL AND FITTINGS SHALL BE AS SPECIFIED STANDARDS & SPECIFICATIONS.
7. SUPPORT FOR ASSEMBLY SHALL BE DESIGNED BY GENERAL CONTRACTOR. IT IS RECOMMENDED 8"-10" RP BE SUPPORTED AT CENTER. THE SUPPORT SHALL NOT BLOCK RELIEF VALVE OR DRAIN PORT.
8. AN AIR GAP DRAIN IS RECOMMENDED TO REDUCE SPLASHING OF MINOR DISCHARGES FROM THE RELIEF VALVE DRAIN PORT.
9. ALL LOCATIONS FOR BFPA'S REQUIRE OWNER APPROVAL.
10. NO TAPS, BRANCHES,FH'S OR OTHER ACCESSORIES ARE PERMITTED ON THE PIPING BETWEEN THE BFPA & METER.

7 BACKFLOW PREVENTER DETAIL
NTS

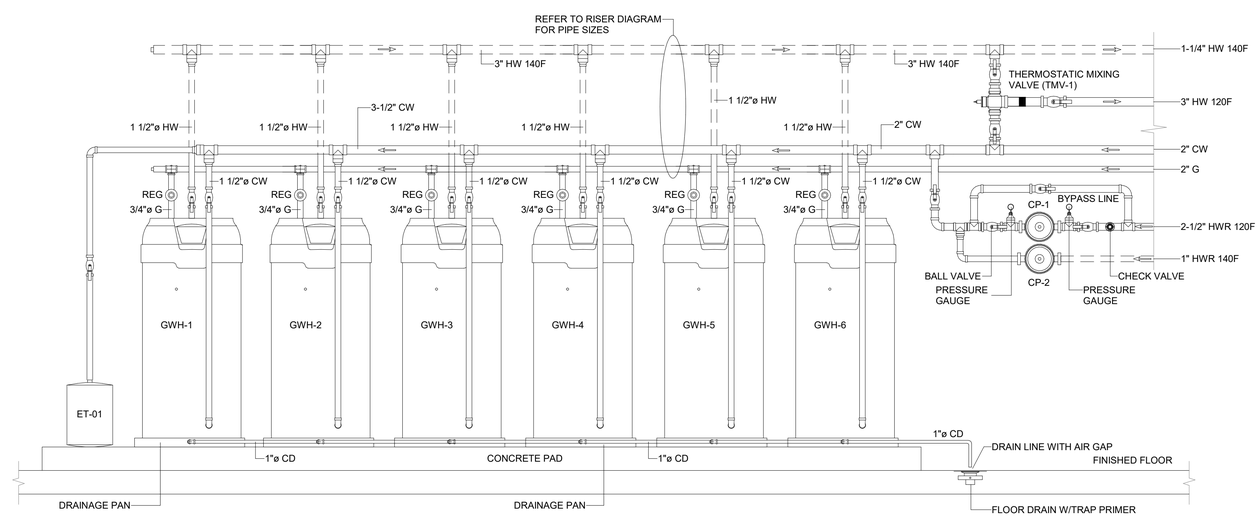

NOTE:
1. REFER TO MECHANICAL DWG'S FOR ROUTING OF GAS FIRED WATER HEATERS INTAKE & EXHAUST FLUES.
2. VALVE BOTH SYSTEMS TOGETHER SUCH THAT EACH SYSTEM CAN BACK UP THE OTHER IN EMERGENCIES.
3. USE AO SMITH CYCLONE WATER HEATERS WITH MANIFOLD SYSTEM PER MANUFACTURER'S REQUIREMENTS.
4. CONTRACTOR SHOULD PROVIDE NON-PLASTIC DRAIN PAN FOR ALL GAS FUELED WATER HEATERS. AND DRAIN PAN SHALL CONNECT TO THE NEAREST FLOOR DRAIN.
5. REFER TO PLUMBING SHEET P-401 FOR WATER HEATER SPECIFICATIONS.

3 WATER HEATERS INSTALLATION DETAIL
NTS

B-20-0180
City of Puyallup

BASE4
2901 CLINT MOORE ROAD, #114
BOCA RATON, FLORIDA 33496
888.901.8008 www.base-4.com

RICARDO J. MUNIZ-GUILLET,AIA
5453 NW 106TH DR
CORAL SPRINGS, FL 33076

MEP ENGINEER
GARRY VERMAAS PhD, PE
2183 S BERRYS CHAPEL ROAD
FRANKLIN, TN 37069

Seal:

GARRY W. VERMAAS
STATE OF WASHINGTON
44860
REGISTERED
PROFESSIONAL ENGINEER

DATE: 2020.06.19
GARRY VERMAAS, PhD, PE
2183 S BERRYS CHAPEL ROAD
FRANKLIN TN 37069

Owner:

Dakota Legacy Group
-Hospitality Development-
4500 36TH AVE. S SUITE
200, FARGO, ND 58104
701.551.8000 (OFFICE)

HOMEWOOD SUITES BY HILTON
3500 S MERIDIAN, PUYALLUP, WA 98373

PROTOTYPE VERSION: V9.2 2014 FEB

ISSUE NO.	DELTA	ISSUE DATE	DESCRIPTION
1	P0	2020.02.21	ISSUED FOR PERMIT

CURRENT ISSUE
ISSUED FOR PERMIT

CURRENT ISSUE DATE
2020.02.21

DRAWN BY
NAT

CHECKED BY
GWV

PROJECT NO.
B4-124-1803

SHEET NAME
DETAILS-1

DRAWINGS NO.
P-101

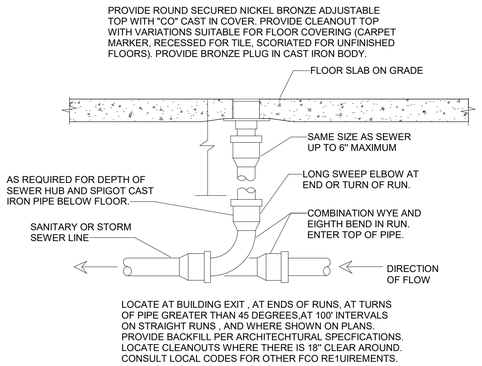

10 FLOOR CLEANOUT DETAIL
NTS

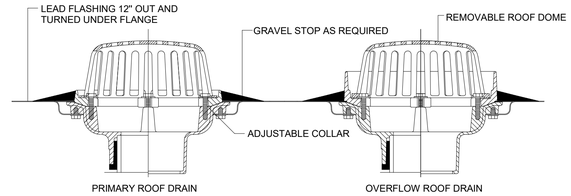

NOTES:

1. CONTRACTOR SHALL VERIFY THAT INSTALLATION IS IN COMPLIANCE WITH ROOFING MANUFACTURERS RECOMMENDATIONS.
2. REFER TO ARCHITECTURAL AND STRUCTURAL DRAWINGS FOR ROOF CONSTRUCTION.
3. REFER TO SHEET P-401 FOR RD/ORD SPECIFICATION.

7 PRIMARY AND OVERFLOW ROOF DRAIN DETAIL
NTS

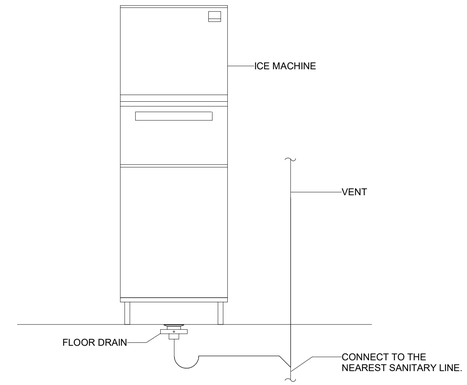

4 ICE MAKER DRAINAGE PIPING DETAIL
NTS

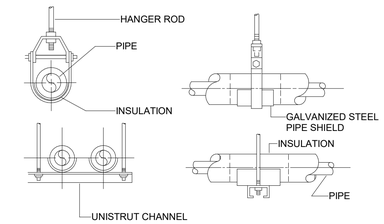

1 WATER PIPING HANGER DETAIL
NTS

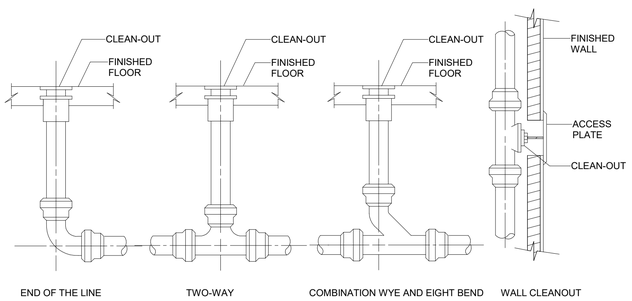

11 FLOOR & WALL CLEANOUTS
NTS

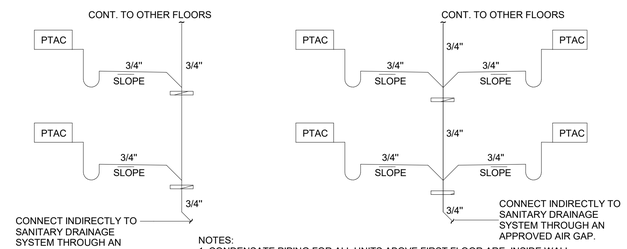

NOTES:

1. CONDENSATE PIPING FOR ALL UNITS ABOVE FIRST FLOOR ARE INSIDE WALL.
2. CONDENSATE DRAIN PIPING TO BE AS SPECIFIED PER PLUMBING PLANS, IF NOT SPECIFIED, TO BE TYPE "L" COPPER OR PVC WHERE ALLOWED BY CODE WITH 1/2" ARMAFLEX INSULATION.
3. PROVIDE APPROVED WATER LEVEL DETECTOR OR FLOAT SWITCH TO AUTOMATICALLY SHUT DOWN THE AIR CONDITIONING UNIT, AS A SECONDARY DRAIN SYSTEM TO COMPLY WITH MECHANICAL STATE BUILDING CODE.
4. ALLOW SUFFICIENT SPACE BELOW DRAIN PAN FOR TRAP.
5. PITCH DRAIN FOR PROPER RUNOFF.
6. MANUALLY PRIME FILL TRAP BEFORE START-UP TO FORM INITIAL DRAIN SEAL.
7. SUPPORT LENGTHY DRAIN LINES TO PREVENT SAG AND CONDENSATE OVERFLOW.
8. CONDENSATE DRAIN PIPING SHALL MAINTAIN A MINIMUM HORIZONTAL SLOPE IN THE DIRECTION OF DISCHARGE NOT LESS THAN 1/8 UNIT VERTICAL IN 12 UNITS HORIZONTAL.

8 PTAC CONDENSATE DETAIL
NTS

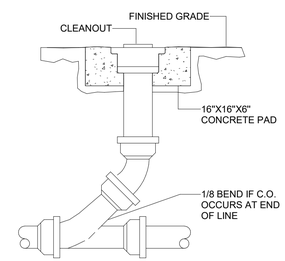

5 CLEANOUT TO GRADE
NTS

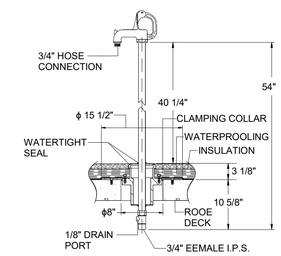

2 ROOF HYDRANT DETAIL
NTS

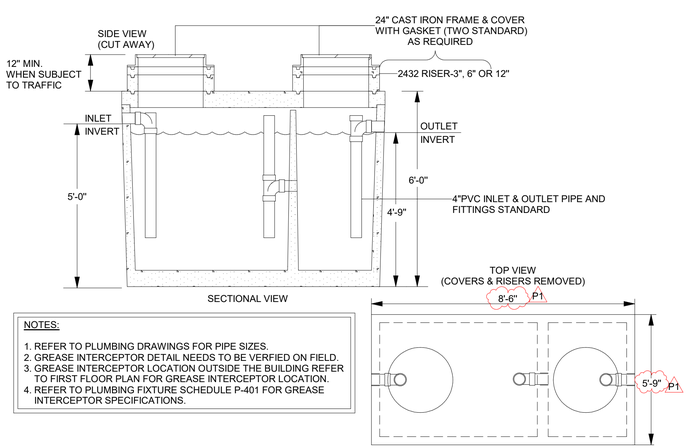

NOTES:

1. REFER TO PLUMBING DRAWINGS FOR PIPE SIZES.
2. GREASE INTERCEPTOR DETAIL NEEDS TO BE VERIFIED ON FIELD.
3. GREASE INTERCEPTOR LOCATION OUTSIDE THE BUILDING REFER TO FIRST FLOOR PLAN FOR GREASE INTERCEPTOR LOCATION.
4. REFER TO PLUMBING FIXTURE SCHEDULE P-401 FOR GREASE INTERCEPTOR SPECIFICATIONS.

12 GREASE INTERCEPTOR DETAIL
NTS

NOTES:

1. BASE MATERIAL: POLY CARBONATE.
2. SIZE: THE DECK BASE IS 6" SQUARE, THE STACKING PLATFORM IS 2" HIGH, THE TOP OF THE "U" CRADLE IS 3" HIGH, AND THE MAXIMUM INSIDE WIDTH OF THE CRADLE IS 1.95".
3. MAX PIPE SIZE: 1-1/2" INSIDE DIAMETER AND 1-9/10" OUTSIDE DIAMETER.
4. MAX PIPE CLEARANCE: PIPES SUPPORTED ON PIPE STAND WILL HAVE A
5. CLEARANCE OF 2" OVER THE ROOF. MAX LOAD WEIGHT: MAXIMUM LOAD WEIGHT MAY NOT EXCEED 80 LBS. PER PIPE STAND.
6. SPACING: MANUFACTURER'S RECOMMENDED SPACING IS NOT TO EXCEED 10 FEET CENTERS DEPENDING UPON THE LOAD.
7. USE 4-3/8" KWIK BOLT WITH 2" EMBEDMENT.

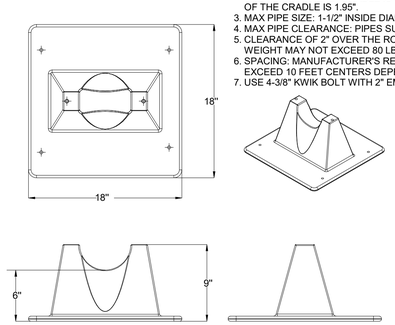

9 ROOF GAS PIPE SUPPORT DETAIL
NTS

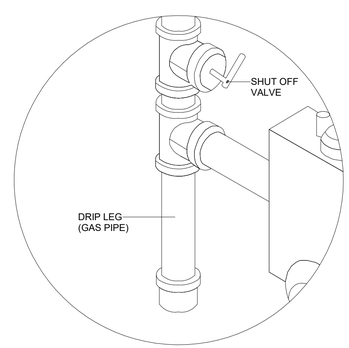

6 GAS TEST PORT AND SHUT-OFF VALVE DETAIL
NTS

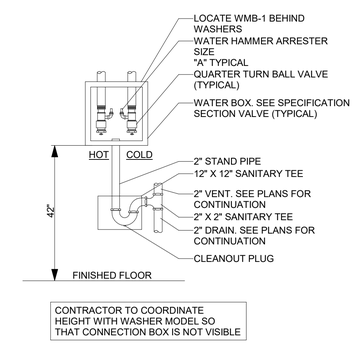

CONTRACTOR TO COORDINATE HEIGHT WITH WASHER MODEL SO THAT CONNECTION BOX IS NOT VISIBLE

3 GREY BOX DETAIL
NTS

BASE4
2901 CLINT MOORE ROAD, #114
BOCA RATON, FLORIDA 33496
888.901.8008 www.base-4.com

RICARDO J. MUNIZ-GUILLET,AIA
5453 NW 106TH DR
CORAL SPRINGS, FL 33076

MEP ENGINEER
GARRY VERMAAS PhD, PE
2183 S BERRYS CHAPEL ROAD
FRANKLIN, TN 37069

Seal:

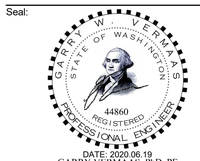

DATE: 2020.06.19
GARRY VERMAAS, PhD, PE
2183 S BERRYS CHAPEL ROAD
FRANKLIN TN 37069

Owner:

Dakota Legacy Group
-Hospitality Development-
4500 36TH AVE. S SUITE
200, FARGO, ND 58104
701.551.8000 (OFFICE)

HOMEWOOD SUITES BY HILTON

3500 S MERIDIAN, PUYALLUP, WA 98373

PROTOTYPE VERSION: V9.2 2014 FEB

ISSUE NO.	DELTA	ISSUE DATE	DESCRIPTION
2	P1	2020.06.03	ADDENDUM #1
1	P0	2020.02.21	ISSUED FOR PERMIT

B-20-0180
City of Puyallup

CURRENT ISSUE

ISSUED FOR PERMIT

CURRENT ISSUE DATE
2020.02.21

DRAWN BY
NAT

CHECKED BY
GWV

PROJECT NO.
B4-124-1803

SHEET NAME

DETAILS-2

DRAWINGS NO.

P-102

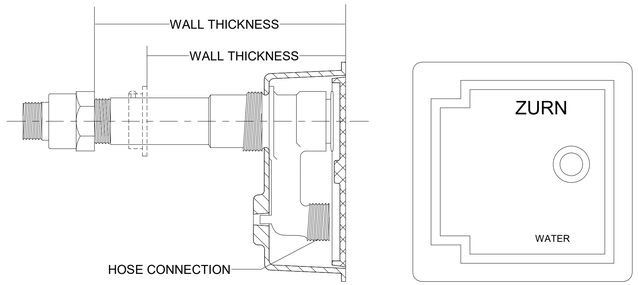

NOTE:
1. ALL HOSE BIBS SHOULD BE FREEZE PROOF IN COLD CLIMATE.

8 HOSE BIB DETAIL
NTS

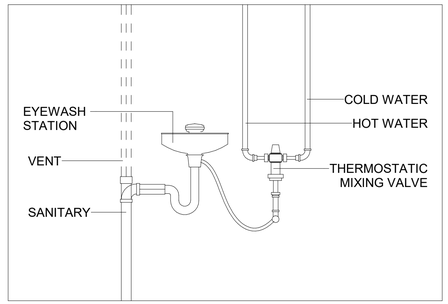

6 EYEWASH STATION DETAIL
NTS

PIPE DIA. "D"	MAXIMUM "A"
1" TO 5"	6"
6"TO 15"	8"
18" TO 21"	10"
24" TO 30"	12"
33" TO 42"	15"
48" & LARGER	18"

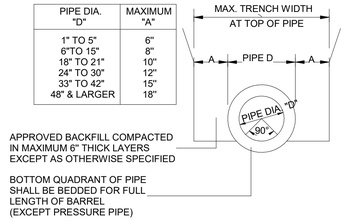

4 PIPE TRENCH DETAIL
NTS

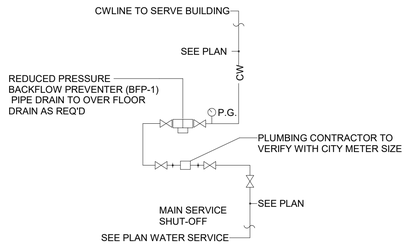

1 INCOMING WATER SERVICE PIPING DIAGRAM
NTS

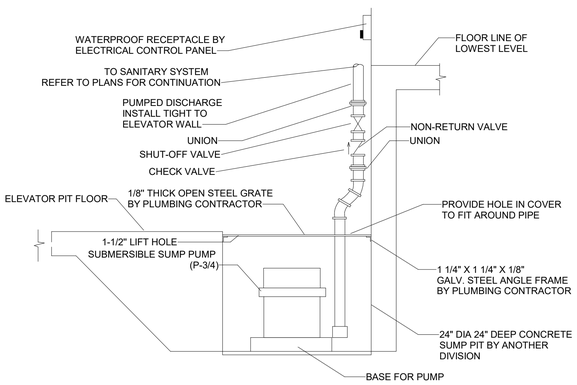

9 ELEVATOR PIT SUMP PUMP DETAIL
NTS

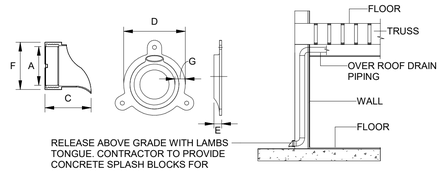

G-O-N	A INSIDE DIAMETER	B HUB DEPTH	C NOZZLE DEPTH	D ESCUTCHEON WIDTH	E ESCUTCHEON WIDTH	F OVERALL DIMENSION	G ESCUTCHEON WIDTH
4"	4.52"	1.5"	5.37"	8.00"	0.57"	5.50"	1.25"

7 LAMBS TONGUE DETAIL
NTS

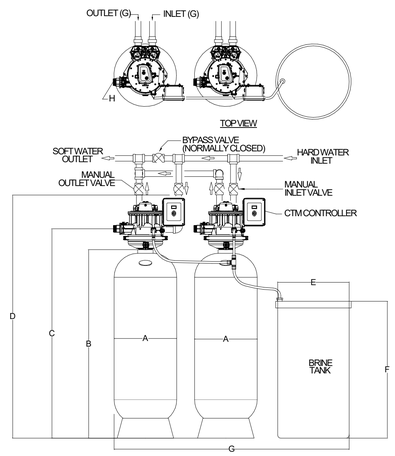

5 WATER SOFTENER DETAIL
NTS

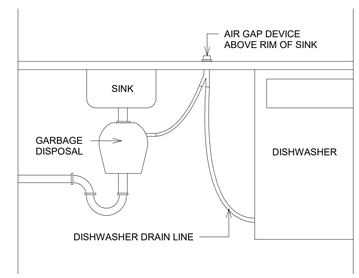

2 DISHWASHER DRAIN DETAIL
NTS

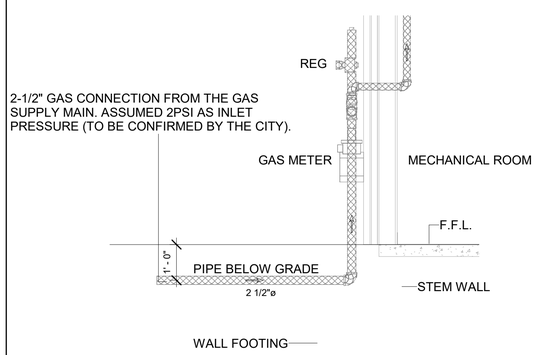

10 GAS LINE ENTERING THE BUILDING
NTS

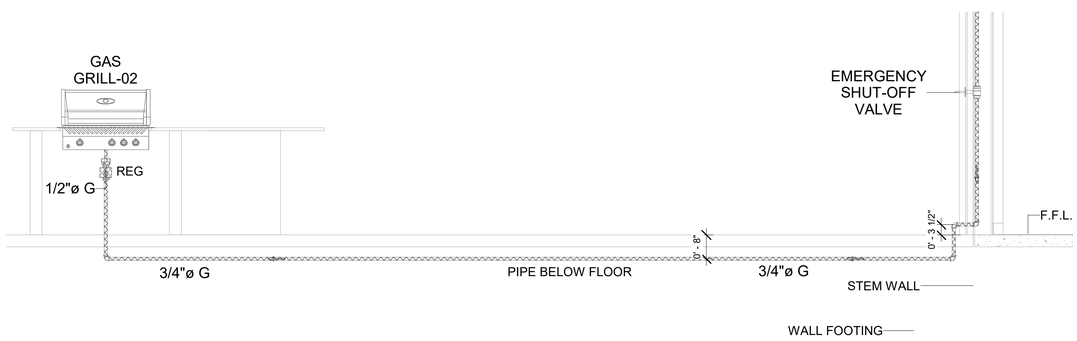

3 GAS LINE TO THE GAS GRILL
NTS

B-20-0180
City of Puyallup

BASE4

BASE4
2901 CLINT MOORE ROAD, #114
BOCA RATON, FLORIDA 33496
888.901.8008 www.base-4.com

RICARDO J. MUNIZ-GUILLET,AIA
5453 NW 106TH DR
CORAL SPRINGS, FL 33076

MEP ENGINEER
GARRY VERMAAS PhD, PE
2183 S BERRYS CHAPEL ROAD
FRANKLIN, TN 37069

Seal:

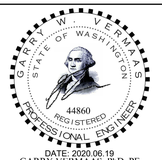

DATE: 2020.06.19
GARRY VERMAAS, PhD, PE
2183 S BERRYS CHAPEL ROAD
FRANKLIN TN 37069

Owner:

Dakota Legacy Group
-Hospitality Development-
4500 36TH AVE. S SUITE
200, FARGO, ND 58104
701.551.8000 (OFFICE)

HOMEWOOD SUITES BY HILTON

3500 S MERIDIAN, PUYALLUP, WA 98373

PROTOTYPE VERSION: V9.2 2014 FEB

ISSUE NO.	DELTA	ISSUE DATE	DESCRIPTION
1	P0	2020.02.21	ISSUED FOR PERMIT

CURRENT ISSUE

ISSUED FOR PERMIT

CURRENT ISSUE DATE
2020.02.21

DRAWN BY
NAT

CHECKED BY
GWV

PROJECT NO.
B4-124-1803

SHEET NAME

DETAILS-3

DRAWINGS NO.

P-103

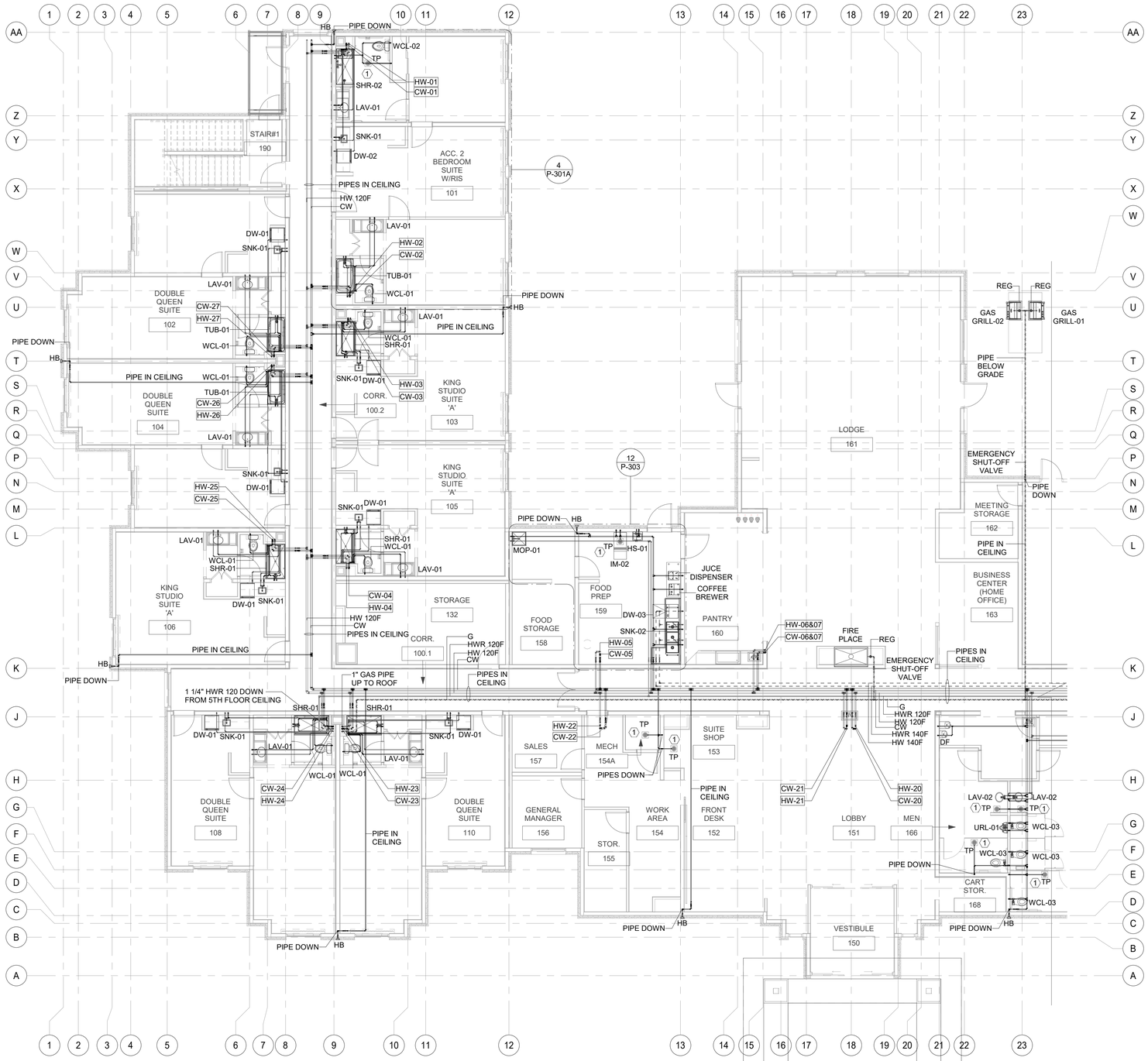

1 1ST FLOOR WATER & GAS SUPPLY PLAN PART-A
1/8" = 1'-0"

WATER SUPPLY KEYNOTE.

#	TEXT
1	PROVIDE AND INSTALL PRECISION PLUMBING PRODUCTS INC. #P1-500 TRAP PRIMER WITH 1/2" CW CONNECTION TO LINE INDICATED ON DRAWING. EXTEND OFF TOP OF LINE PER MANUFACTURER INSTRUCTIONS.(OR) PROVIDE AND INSTALL THE PROSET TRAP GUARD FLOOR DRAIN AS ALTERNATIVE.

GENERAL NOTES

1. WATER HAMMER ARRESTORS SHALL BE PROVIDED AT ALL QUICK-CLOSING VALVES SUCH AS FLUSH VALVE, WASHING MACHINES, ICE MAKERS, REFRIGERATOR, DISHWASHERS, AND DRINKING FOUNTAINS AND SHALL CONFIRM WITH ASSE 1010.
2. REFER TO THE UNIT PLANS FOR THE PIPING IN EACH UNIT.
3. CONTRACTOR TO COORDINATE LOCATION OF PLUMBING RISER IN SHAFT WITH OTHER TRADES.
4. REFER TO PLUMBING ISOMETRIC DRAWINGS FOR PIPE SIZES NOT LABELED IN PLANS.
5. AS PER FLOW TEST REPORT STATIC PRESSURE IS 51 PSI HENCE BOOSTER PUMP IS REQUIRED, IF THESE PRESSURE CHANGES PLEASE CONTACT THE "EOR".
6. PROVIDE INSULATION FOR ALL ICE MACHINE DRAIN TRAPS.
7. ALL SHOWER AND SHOWER/TUBS SHALL HAVE PRESSURE BALANCING VALVES.
8. BFP-2 TO BE PROVIDED FOR ALL ICE MACHINES AND COFFEE BREWERS NEAR COLD WATER SUPPLY.
9. VIBRATION ISOLATOR TO BE GIVEN FOR BOOSTER PUMP & RECIRCULATION PUMPS.
10. CONTRACTOR TO SELECT ALL VALVES AND SUBMIT SPECS TO BASE4 FOR REVIEW.
11. POOL CONTRACTOR TO SUBMIT POOL DRAWINGS AND POOL HEATER SPECIFICATIONS TO BASE4 FOR REVIEW.
12. POOL CONTRACTOR TO CONNECT POOL HEATING PIPES TO DHU BEFORE POOL HEATER.
13. GC TO TEST THE BACKFLOW PREVENTER BEFORE PUT INTO SERVICE AND SHALL SUBMIT THE TEST REPORTS TO THE AHJ FOR APPROVAL.
14. PROVIDE 1" ARMAFLEX INSULATION TO HOT WATER SUPPLY PIPES.
15. CONTRACTOR SHALL PROVIDE EMERGENCY GAS SHUT-OFF VALVE WITH KEY AT GAS FIRE PIT AND GAS GRILLS.
16. CONTRACTOR SHALL ENSURE TO PROVIDE THE BACKFLOW PREVENTER CONFORMING TO ASSE 1022 OR BY AN AIR GAP TO PREVENT THE BACKFLOW FOR THE WATER SUPPLY CONNECTION TO COFFEE MACHINES AND NON-CARBONATED BEVERAGE DISPENSERS.
17. CONTRACTOR SHALL INSTALL WATER ARRESTOR AT PUBLIC TOILETS.
18. CONTRACTOR SHALL ENSURE TO PROVIDE THE TEMPERATURE MIXING VALVE FOR PUBLIC HAND WASHING FACILITIES.
19. GC SHALL INSTALL ALL THE EXTERIOR PIPING BASED ON FROST DEPTH.
20. ALL DRAIN LINES, P-TRAP AND SUPPLY LINES EXPOSED TO VIEW BENEATH THE VANITY OR BEHIND THE WATER CLOSET MUST BE CHROME PLATED.

B-20-0180
City of Puyallup

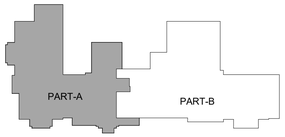

KEY PLAN FOR 1ST FLOOR-A
1" = 80'-0"

BASE4
2901 CLINT MOORE ROAD, #114
BOCA RATON, FLORIDA 33496
888.901.8008 www.base-4.com

RICARDO J. MUNIZ-GUILLET,AIA
5453 NW 106TH DR
CORAL SPRINGS, FL 33076

MEP ENGINEER
GARRY VERMAAS PhD, PE
2183 S BERRYS CHAPEL ROAD
FRANKLIN, TN 37069

Seal:

GARRY W. VERMAAS
STATE OF WASHINGTON
44860
REGISTERED
PROFESSIONAL ENGINEER

DATE: 2020.06.19
GARRY VERMAAS, PhD, PE
2183 S BERRYS CHAPEL ROAD
FRANKLIN TN 37069

Owner:

Dakota Legacy Group
-Hospitality Development-
4500 36TH AVE. S SUITE
200, FARGO, ND 58104
701.551.8000 (OFFICE)

HOMEWOOD SUITES BY HILTON
3500 S MERIDIAN, PUYALLUP, WA 98373

PROTOTYPE VERSION: V9.2 2014 FEB

ISSUE NO.	DELTA	ISSUE DATE	DESCRIPTION
1	P0	2020.02.21	ISSUED FOR PERMIT

CURRENT ISSUE

ISSUED FOR PERMIT

CURRENT ISSUE DATE
2020.02.21

DRAWN BY
NAT

CHECKED BY
GWV

PROJECT NO.
B4-124-1803

SHEET NAME

1ST FLOOR WATER & GAS SUPPLY PLAN-A

DRAWINGS NO.

P-201A

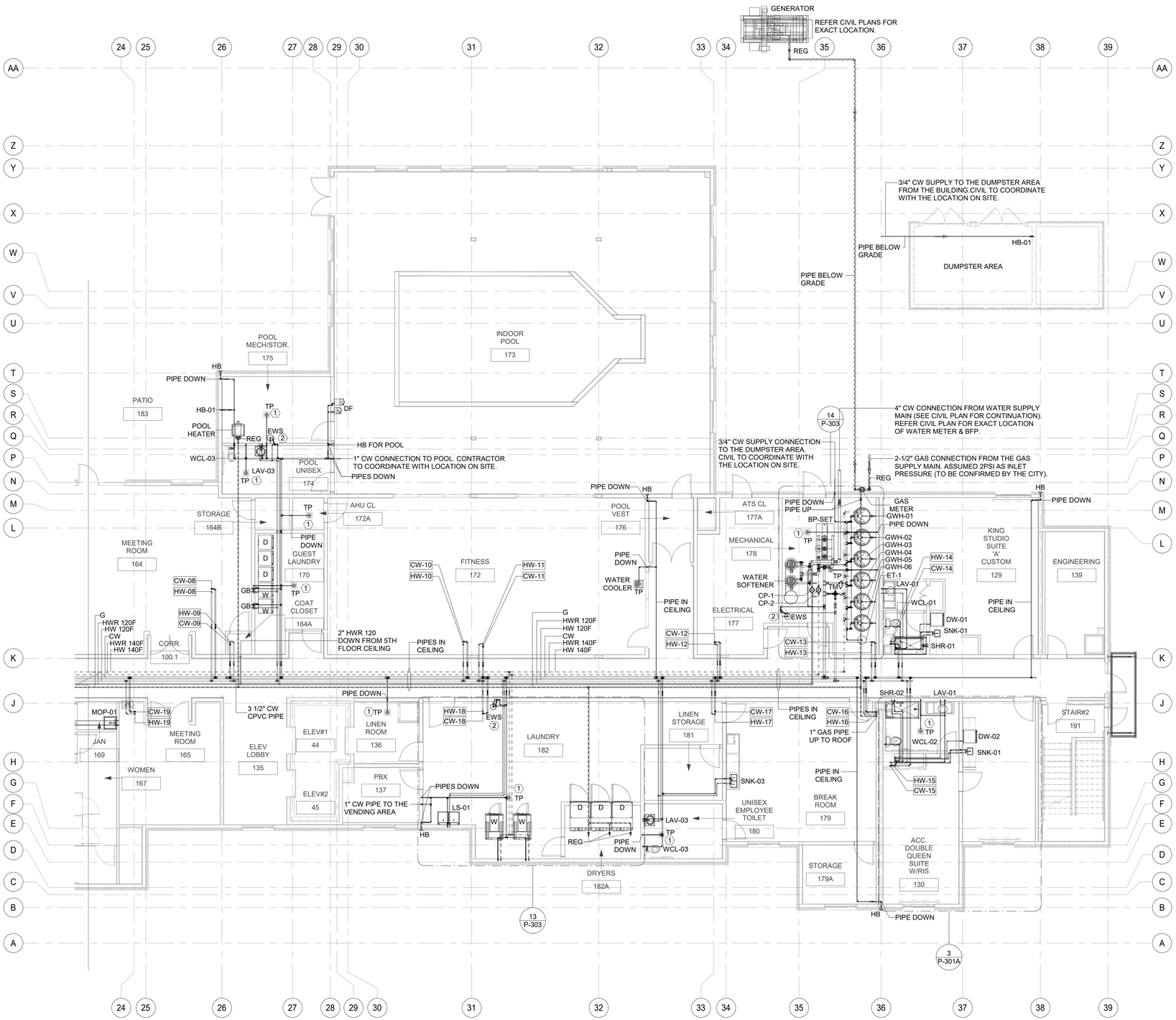

1 1ST FLOOR WATER & GAS SUPPLY PLAN PART-B
1/8" = 1'-0"

WATER SUPPLY KEYNOTES

#	TEXT
①	PROVIDE AND INSTALL PRECISION PLUMBING PRODUCTS INC. #P1-500 TRAP PRIMER WITH 1/2" CW CONNECTION TO LINE INDICATED ON DRAWING. EXTEND OFF TOP OF LINE PER MANUFACTURER INSTRUCTIONS.(OR) PROVIDE AND INSTALL THE PROSET TRAP GUARD FLOOR DRAIN AS ALTERNATIVE.
②	CONTRACTOR SHALL PROVIDE AN APPROVED WATER-TEMPERATURE LIMITING DEVICE TO PROVIDE TEPID WATER FOR EYE WASH STATION. DEVICE MUST MEET MINIMUM FLOW RATES AND DURATION REQUIREMENTS.

GENERAL NOTES

1. WATER HAMMER ARRESTORS SHALL BE PROVIDED AT ALL QUICK-CLOSING VALVES SUCH AS FLUSH VALVE, WASHING MACHINES, ICE MAKERS, REFRIGERATOR, DISHWASHERS, AND DRINKING FOUNTAINS AND SHALL CONFIRM WITH ASSE 1010.
2. REFER TO THE UNIT PLANS FOR THE PIPING IN EACH UNIT.
3. CONTRACTOR TO COORDINATE LOCATION OF PLUMBING RISER IN SHAFT WITH OTHER TRADES.
4. REFER TO PLUMBING ISOMETRIC DRAWINGS FOR PIPE SIZES NOT LABELED IN PLANS.
5. AS PER FLOW TEST REPORT STATIC PRESSURE IS 51 PSI HENCE BOOSTER PUMP IS REQUIRED, IF THESE PRESSURE CHANGES PLEASE CONTACT THE "EOR".
6. PROVIDE INSULATION FOR ALL ICE MACHINE DRAIN TRAPS.
7. ALL SHOWER AND SHOWER/TUBS SHALL HAVE PRESSURE BALANCING VALVES.
8. BFP-2 TO BE PROVIDED FOR ALL ICE MACHINES AND COFFEE BREWERS NEAR COLD WATER SUPPLY.
9. VIBRATION ISOLATOR TO BE GIVEN FOR BOOSTER PUMP & RECIRCULATION PUMPS.
10. CONTRACTOR TO SELECT ALL VALVES AND SUBMIT SPECS TO BASE4 FOR REVIEW.
11. POOL CONTRACTOR TO SUBMIT POOL DRAWINGS AND POOL HEATER SPECIFICATIONS TO BASE4 FOR REVIEW.
12. POOL CONTRACTOR TO CONNECT POOL HEATING PIPES TO DHU BEFORE POOL HEATER.
13. GC TO TEST THE BACKFLOW PREVENTER BEFORE PUT INTO SERVICE AND SHALL SUBMIT THE TEST REPORTS TO THE AHJ FOR APPROVAL.
14. PROVIDE 1" ARMAFLEX INSULATION TO HOT WATER SUPPLY PIPES.
15. CONTRACTOR SHALL PROVIDE EMERGENCY GAS SHUT-OFF VALVE WITH KEY AT GAS FIRE PIT AND GAS GRILLS.
16. CONTRACTOR SHALL ENSURE TO PROVIDE THE BACKFLOW PREVENTER CONFORMING TO ASSE 1022 OR BY AN AIR GAP TO PREVENT THE BACKFLOW FOR THE WATER SUPPLY CONNECTION TO COFFEE MACHINES AND NON-CARBONATED BEVERAGE DISPENSERS.
17. CONTRACTOR SHALL INSTALL WATER ARRESTOR AT PUBLIC TOILETS.
18. CONTRACTOR SHALL ENSURE TO PROVIDE THE TEMPERATURE MIXING VALVE FOR PUBLIC HAND WASHING FACILITIES.
19. GC SHALL INSTALL ALL THE EXTERIOR PIPING BASED ON FROST DEPTH.
20. ALL DRAIN LINES, P-TRAP AND SUPPLY LINES EXPOSED TO VIEW BENEATH THE VANITY OR BEHIND THE WATER CLOSET MUST BE CHROME PLATED.

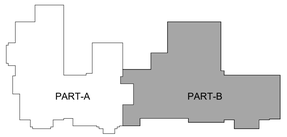

KEY PLAN FOR 1ST FLOOR-B
1" = 80'-0"

B-20-0180
City of Puyallup

BASE4
2901 CLINT MOORE ROAD, #114
BOCA RATON, FLORIDA 33496
888.901.8008 www.base-4.com

RICARDO J. MUNIZ-GUILLET,AIA
5453 NW 106TH DR
CORAL SPRINGS, FL 33076

MEP ENGINEER
GARRY VERMAAS PhD, PE
2183 S BERRYS CHAPEL ROAD
FRANKLIN, TN 37069

Seal:

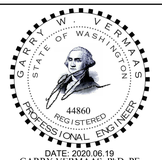

DATE: 2020.06.19
GARRY VERMAAS, PhD, PE
2183 S BERRYS CHAPEL ROAD
FRANKLIN TN 37069

Owner:

Dakota Legacy Group
-Hospitality Development-
4500 36TH AVE. S SUITE
200, FARGO, ND 58104
701.551.8000 (OFFICE)

HOMEWOOD SUITES BY HILTON
3500 S MERIDIAN, PUYALLUP, WA 98373

PROTOTYPE VERSION: V9.2 2014 FEB

ISSUE NO.	DELTA	ISSUE DATE	DESCRIPTION
1	P0	2020.02.21	ISSUED FOR PERMIT

CURRENT ISSUE
ISSUED FOR PERMIT

CURRENT ISSUE DATE
2020.02.21

DRAWN BY
NAT

CHECKED BY
GWV

PROJECT NO.
B4-124-1803

SHEET NAME
1ST FLOOR WATER & GAS SUPPLY PLAN-B

DRAWINGS NO.
P-201B

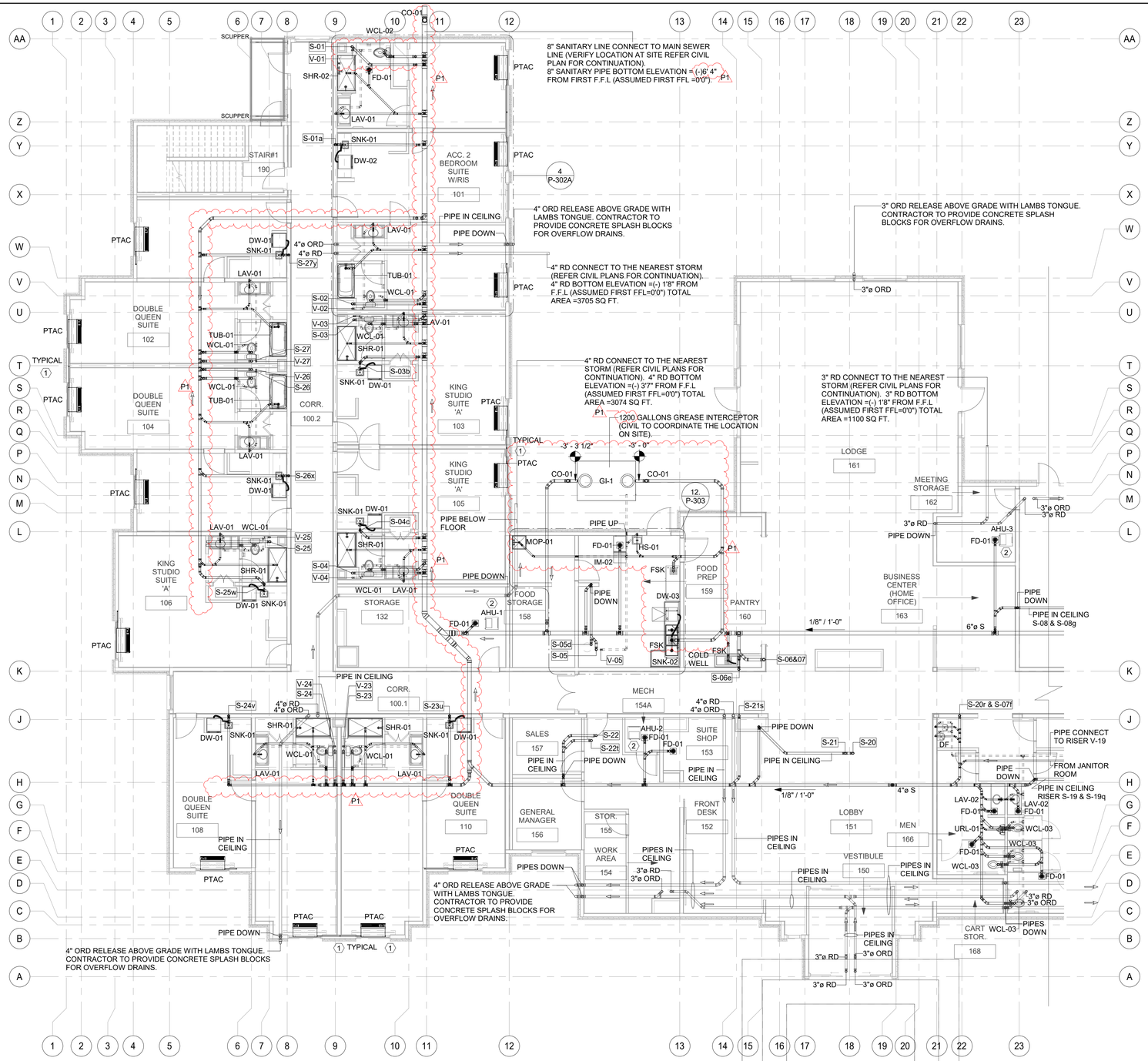

1 1ST FLOOR SANITARY & VENT PLAN PART-A
1/8" = 1'-0"

SANITARY AND VENT KEYNOTES

#	TEXT
1	ALL PTAC'S & CEILING MOUNTED AHU/DS UNITS CONDENSATE LINE SHALL CONNECT TO NEAREST SANITARY LINE. CONTRACTOR TO COORDINATE WITH THE CONNECTIONS & ENSURE SLOPE OF 1/8" PER FT IS MAINTAINED.
2	ALL FLOOR MOUNTED AHU SHALL INDIRECTLY CONNECT TO NEAREST FLOOR DRAIN & NEED TO CONNECT TO NEAREST SANITARY LINE, CONTRACTOR TO COORDINATE WITH THE CONNECTIONS & ENSURE SLOPE OF 1/8"PER FT IS MAINTAINED.

GENERAL NOTES

1. REFER TO THE UNIT PLANS FOR THE PIPING IN EACH UNIT.
2. REFER TO THE ARCHITECTURAL DRAWING FOR PANTRY/KITCHEN EQUIPMENTCALLOUTS.
3. CONTRACTOR TO COORDINATE LOCATION OF PLUMBING RISER IN SHAFT WITH OTHER TRADES.
4. REFER TO PLUMBING ISOMETRIC DRAWINGS FOR PIPE SIZES NOT LABELED IN PLANS.
5. CONTRACTOR SHALL PROVIDE INSULATION FOR FLOOR DRAIN PIPING.
6. CONTRACTOR SHALL PROVIDE WALL CLEANOUTS AT THE BASE OF EACH VERTICAL WASTE STACK AND AS PER LATEST PLUMBING CODE.
7. GC TO PROVIDE CLEANOUTS AT INTERVALS OF NOT MORE THAN 100FT AND AT CHANGE IN HORIZONTAL DIRECTION GREATER THAN 45DEG. CLEANOUT'S SHALL BE THE SAME SIZE AS THE PIPE SERVING THE CLEANOUT.
8. ALL PIPE'S TO BE INSULATED AGAINST FREEZING.
9. CONTRACTOR TO PROVIDE INSULATION FOR WASTE AND WATER PIPING SERVING THE DUMPSTER AREA.
10. GC TO ENSURE ALL RUNS OF SANITARY & STORM BELOW THE FOOTINGS ARE ENCASED IN CONCRETE WORK OR STEEL TO PREVENT RUPTURE. REFER TO SE DRAWINGS.
11. CONTRACTOR TO ENSURE AIRGAP BETWEEN THE FLOOR SINK AND THE DRAIN LINE FROM 3-COMPARTMENT SINK.
12. CONTRACTOR SHALL ENSURE AIRGAP BETWEEN THE DRAIN LINE OF ELEVATOR SUMP PUMP AND THE HUB DRAIN.
13. CONTRACTOR TO INSTALL ALL PRIMARY ROOF DRAIN PIPES OUTSIDE THE BUILDING BASED ON FROST DEPTH AND AS PER SITE ELEVATIONS.
14. ELEVATOR PIT / SHAFT DIMENSIONS AND CAPACITY / SPEED ARE BASIS OF DESIGN SPECIFICATION ONLY. GC SHALL COORD. WITH OWNER AND SUBMIT ELEVATOR SHOP DRAWINGS / SPECIFICATIONS TO BASE4, AS SOON AS POSSIBLE BUT NO LATER THAN PRIOR TO INITIAL MUNICIPAL FILING COMMENTS RESUBMITTAL.
15. CONTRACTOR SHALL PROVIDE AIR ADMITTANCE VALVE FOR ALL DISHWASHERS AT KITCHENNATE SINKS.
16. ALL SANITARY & WATER PIPES WHICH ARE TO BE ROUTED THROUGH THE TRUSSES/TJI'S. TRUSS/TJI MANUFACTURER TO COORDINATE WITH PLUMBING CONTRACTOR ON SITE FOR TRUSS/TJI TO BE SPACED ACCORDINGLY TO AVOID CLASH.
17. CONTRACTOR TO INSTALL ALL THE PRIMARY ROOF DRAIN PIPES OUTSIDE THE BUILDING BASED ON FROST DEPTH AND AS PER SITE ELEVATIONS.

B-20-0180
City of Puyallup

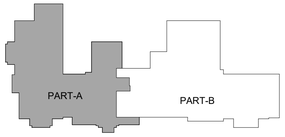

KEY PLAN FOR 1ST FLOOR-A
1" = 80'-0"

BASE4
2901 CLINT MOORE ROAD, #114
BOCA RATON, FLORIDA 33496
888.901.8008 www.base-4.com

RICARDO J. MUNIZ-GUILLET,AIA
5453 NW 106TH DR
CORAL SPRINGS, FL 33076

MEP ENGINEER
GARRY VERMAAS PhD, PE
2183 S BERRYS CHAPEL ROAD
FRANKLIN, TN 37069

Seal:

DATE: 2020.06.19
GARRY VERMAAS, PhD, PE
2183 S BERRYS CHAPEL ROAD
FRANKLIN TN 37069

Owner:

Dakota Legacy Group
-Hospitality Development-
4500 36TH AVE. S SUITE 200, FARGO, ND 58104
701.551.8000 (OFFICE)

HOMEWOOD SUITES BY HILTON
3500 S MERIDIAN, PUYALLUP, WA 98373

PROTOTYPE VERSION: V9.2 2014 FEB

ISSUE NO.	DELTA	ISSUE DATE	DESCRIPTION
2	P1	2020.06.03	ADDENDUM #1
1	P0	2020.02.21	ISSUED FOR PERMIT

CURRENT ISSUE
ISSUED FOR PERMIT

CURRENT ISSUE DATE
2020.02.21

DRAWN BY
NAT

CHECKED BY
GWV

PROJECT NO.
B4-124-1803

SHEET NAME
1ST FLOOR SANITARY & VENT PLAN-A

DRAWINGS NO.
P-202A

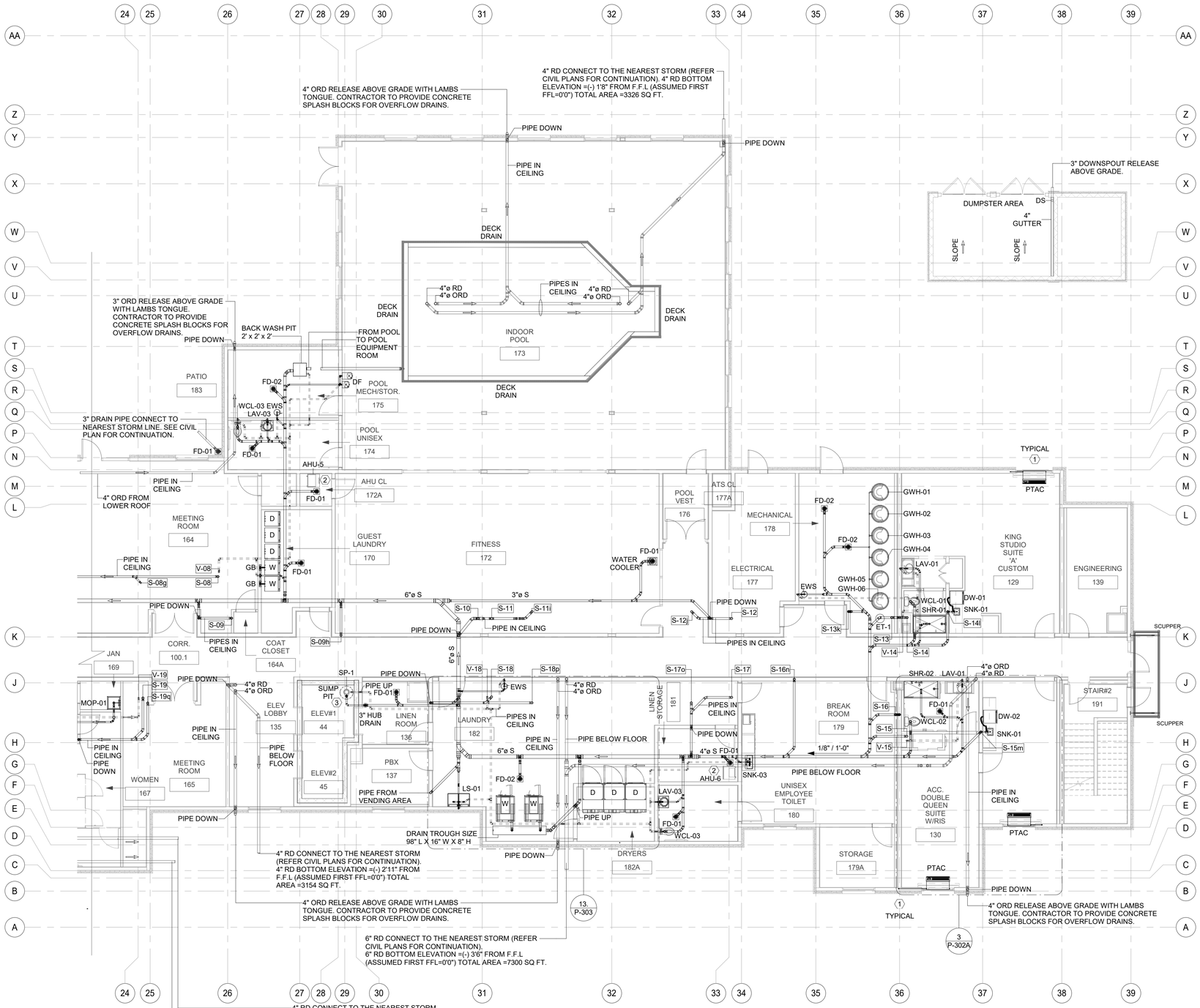

1 1ST FLOOR SANITARY & VENT PLAN PART-B
1/8" = 1'-0"

SANITARY & VENT KEYNOTES

#	TEXT
①	ALL PTAC'S & CEILING MOUNTED AHU/DS UNITS CONDENSATE LINE SHALL CONNECT TO NEAREST SANITARY LINE. CONTRACTOR TO COORDINATE WITH THE CONNECTIONS & ENSURE SLOPE OF 1/8" PER FT IS MAINTAINED.
②	ALL FLOOR MOUNTED AHU SHALL INDIRECTLY CONNECT TO NEAREST FLOOR DRAIN & NEED TO CONNECT TO NEAREST SANITARY LINE, CONTRACTOR TO COORDINATE WITH THE CONNECTIONS & ENSURE SLOPE OF 1/8"PER FT IS MAINTAINED.
③	SUMP PIT DIAMETER OF 24" AND HEIGHT 24" WITH GAS TIGHT REMOVABLE COVER ON TOP OF PIT, REFER TO STRUCTURAL DRAWINGS FOR SUMP PIT DESIGN.

GENERAL NOTES

1. REFER TO THE UNIT PLANS FOR THE PIPING IN EACH UNIT.
2. REFER TO THE ARCHITECTURAL DRAWING FOR PANTRY/KITCHEN EQUIPMENTCALLOUTS.
3. CONTRACTOR TO COORDINATE LOCATION OF PLUMBING RISER IN SHAFT WITH OTHER TRADES.
4. REFER TO PLUMBING ISOMETRIC DRAWINGS FOR PIPE SIZES NOT LABELED IN PLANS.
5. CONTRACTOR SHALL PROVIDE INSULATION FOR FLOOR DRAIN PIPING.
6. CONTRACTOR SHALL PROVIDE WALL CLEANOUTS AT THE BASE OF EACH VERTICAL WASTE STACK AND AS PER LATEST PLUMBING CODE.
7. GC TO PROVIDE CLEANOUTS AT INTERVALS OF NOT MORE THAN 100FT AND AT CHANGE IN HORIZONTAL DIRECTION GREATER THAN 45DEG. CLEANOUT'S SHALL BE THE SAME SIZE AS THE PIPE SERVING THE CLEANOUT.
8. ALL PIPE'S TO BE INSULATED AGAINST FREEZING.
9. CONTRACTOR TO PROVIDE INSULATION FOR WASTE AND WATER PIPING SERVING THE DUMPSTER AREA.
10. GC TO ENSURE ALL RUNS OF SANITARY & STORM BELOW THE FOOTINGS ARE ENCASED IN CONCRETE WORK OR STEEL TO PREVENT RUPTURE. REFER TO SE DRAWINGS.
11. CONTRACTOR TO ENSURE AIRGAP BETWEEN THE FLOOR SINK AND THE DRAIN LINE FROM 3-COMPARTMENT SINK.
12. CONTRACTOR SHALL ENSURE AIRGAP BETWEEN THE DRAIN LINE OF ELEVATOR SUMP PUMP AND THE HUB DRAIN.
13. CONTRACTOR TO INSTALL ALL PRIMARY ROOF DRAIN PIPES OUTSIDE THE BUILDING BASED ON FROST DEPTH AND AS PER SITE ELEVATIONS.
14. ELEVATOR PIT / SHAFT DIMENSIONS AND CAPACITY / SPEED ARE BASIS OF DESIGN SPECIFICATION ONLY. GC SHALL COORD. WITH OWNER AND SUBMIT ELEVATOR SHOP DRAWINGS / SPECIFICATIONS TO BASE4, AS SOON AS POSSIBLE BUT NO LATER THAN PRIOR TO INITIAL MUNICIPAL FILING COMMENTS RESUBMITTAL.
15. CONTRACTOR SHALL PROVIDE AIR ADMITTANCE VALVE FOR ALL DISHWASHERS AT KITCHENNATE SINKS.
16. ALL SANITARY & WATER PIPES WHICH ARE TO BE ROUTED THROUGH THE TRUSSES/TJI'S, TRUSS/TJI MANUFACTURER TO COORDINATE WITH PLUMBING CONTRACTOR ON SITE FOR TRUSS/TJI TO BE SPACED ACCORDINGLY TO AVOID CLASH.
17. CONTRACTOR TO INSTALL ALL THE PRIMARY ROOF DRAIN PIPES OUTSIDE THE BUILDING BASED ON FROST DEPTH AND AS PER SITE ELEVATIONS.

B-20-0180
City of Puyallup

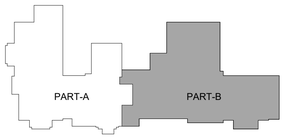

KEY PLAN FOR 1ST FLOOR-B
1" = 80'-0"

BASE4
2901 CLINT MOORE ROAD, #114
BOCA RATON, FLORIDA 33496
888.901.8008 www.base-4.com

RICARDO J. MUNIZ-GUILLET,AIA
5453 NW 106TH DR
CORAL SPRINGS, FL 33076

MEP ENGINEER
GARRY VERMAAS PhD, PE
2183 S BERRYS CHAPEL ROAD
FRANKLIN, TN 37069

Seal:

DATE: 2020.06.19
GARRY VERMAAS, PhD, PE
2183 S BERRYS CHAPEL ROAD
FRANKLIN TN 37069

Owner:

Dakota Legacy Group
-Hospitality Development-
4500 36TH AVE. S SUITE
200, FARGO, ND 58104
701.551.8000 (OFFICE)

HOMEWOOD SUITES BY HILTON
3500 S MERIDIAN, PUYALLUP, WA 98373

PROTOTYPE VERSION: V9.2 2014 FEB

ISSUE NO.	DELTA	ISSUE DATE	DESCRIPTION
1	P0	2020.02.21	ISSUED FOR PERMIT

CURRENT ISSUE
ISSUED FOR PERMIT

CURRENT ISSUE DATE
2020.02.21

DRAWN BY
NAT

CHECKED BY
GWV

PROJECT NO.
B4-124-1803

SHEET NAME
1ST FLOOR SANITARY & VENT PLAN-B

DRAWINGS NO.
P-202B

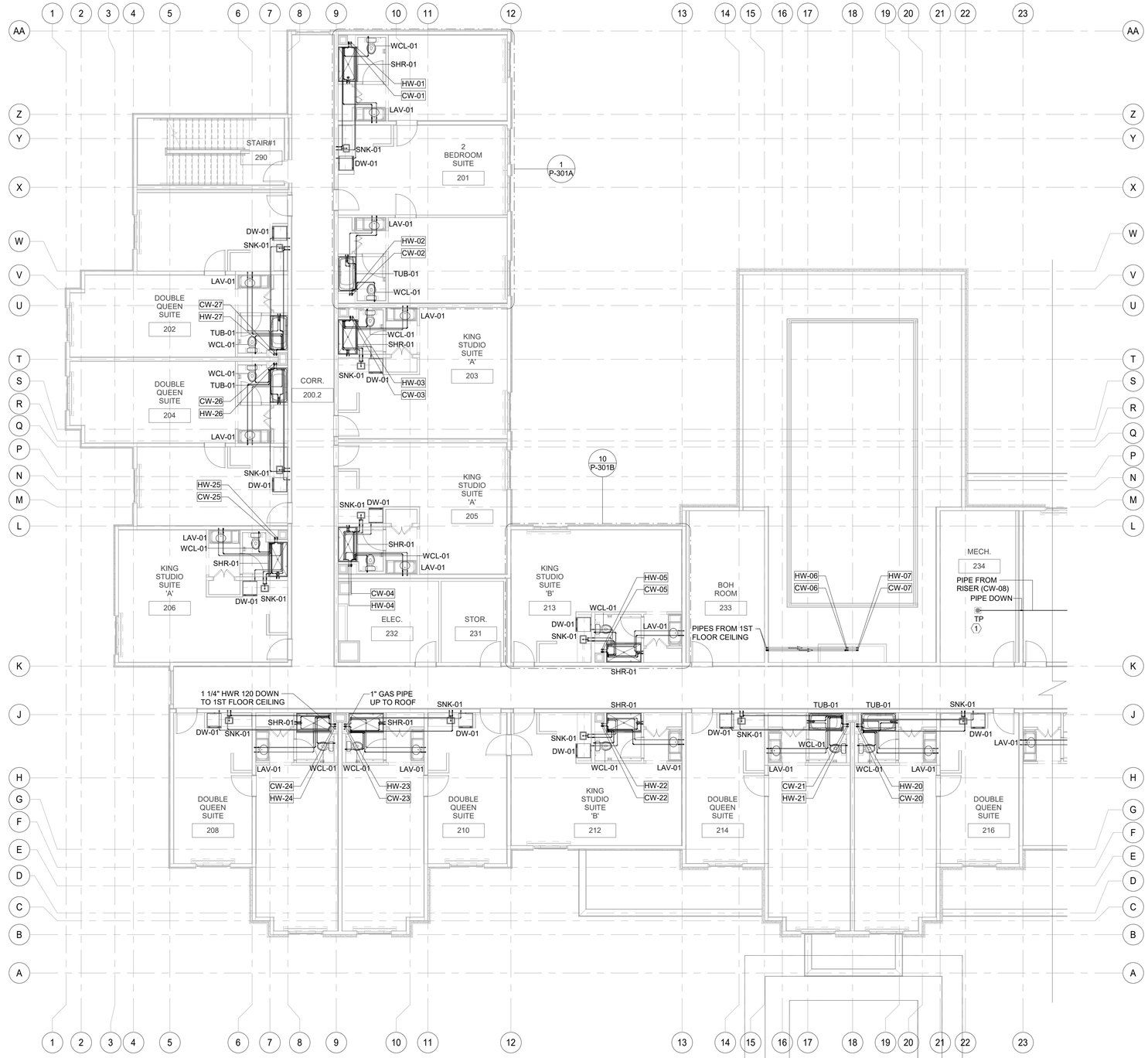

1 2ND FLOOR WATER & GAS SUPPLY PLAN PART-A
1/8" = 1'-0"

WATER SUPPLY KEYNOTE

#	TEXT
1	PROVIDE AND INSTALL PRECISION PLUMBING PRODUCTS INC. #P1-500 TRAP PRIMER WITH 1/2" CW CONNECTION TO LINE INDICATED ON DRAWING. EXTEND OFF TOP OF LINE PER MANUFACTURER INSTRUCTIONS.(OR) PROVIDE AND INSTALL THE PROSET TRAP GUARD FLOOR DRAIN AS ALTERNATIVE.

B-20-0180
City of Puyallup

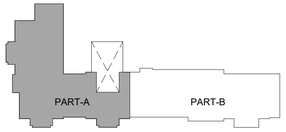

KEY PLAN FOR 2ND FLOOR-A
1" = 80'-0"

BASE4
2901 CLINT MOORE ROAD, #114
BOCA RATON, FLORIDA 33496
888.901.8008 www.base-4.com

RICARDO J. MUNIZ-GUILLET,AIA
5453 NW 106TH DR
CORAL SPRINGS, FL 33076

MEP ENGINEER
GARRY VERMAAS PhD, PE
2183 S BERRYS CHAPEL ROAD
FRANKLIN, TN 37069

Seal:

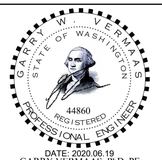

DATE: 2020.06.19
GARRY VERMAAS, PhD, PE
2183 S BERRYS CHAPEL ROAD
FRANKLIN TN 37069

Owner:

Dakota Legacy Group
-Hospitality Development-
4500 36TH AVE. S SUITE
200, FARGO, ND 58104
701.551.8000 (OFFICE)

HOMEWOOD SUITES BY HILTON

3500 S MERIDIAN, PUYALLUP, WA 98373

PROTOTYPE VERSION: V9.2 2014 FEB

ISSUE NO.	DELTA	ISSUE DATE	DESCRIPTION
1	P0	2020.02.21	ISSUED FOR PERMIT

CURRENT ISSUE

ISSUED FOR PERMIT

CURRENT ISSUE DATE
2020.02.21

DRAWN BY
NAT

CHECKED BY
GWV

PROJECT NO.
B4-124-1803

SHEET NAME

2ND FLOOR WATER & GAS SUPPLY PLAN-A

DRAWINGS NO.

P-203A

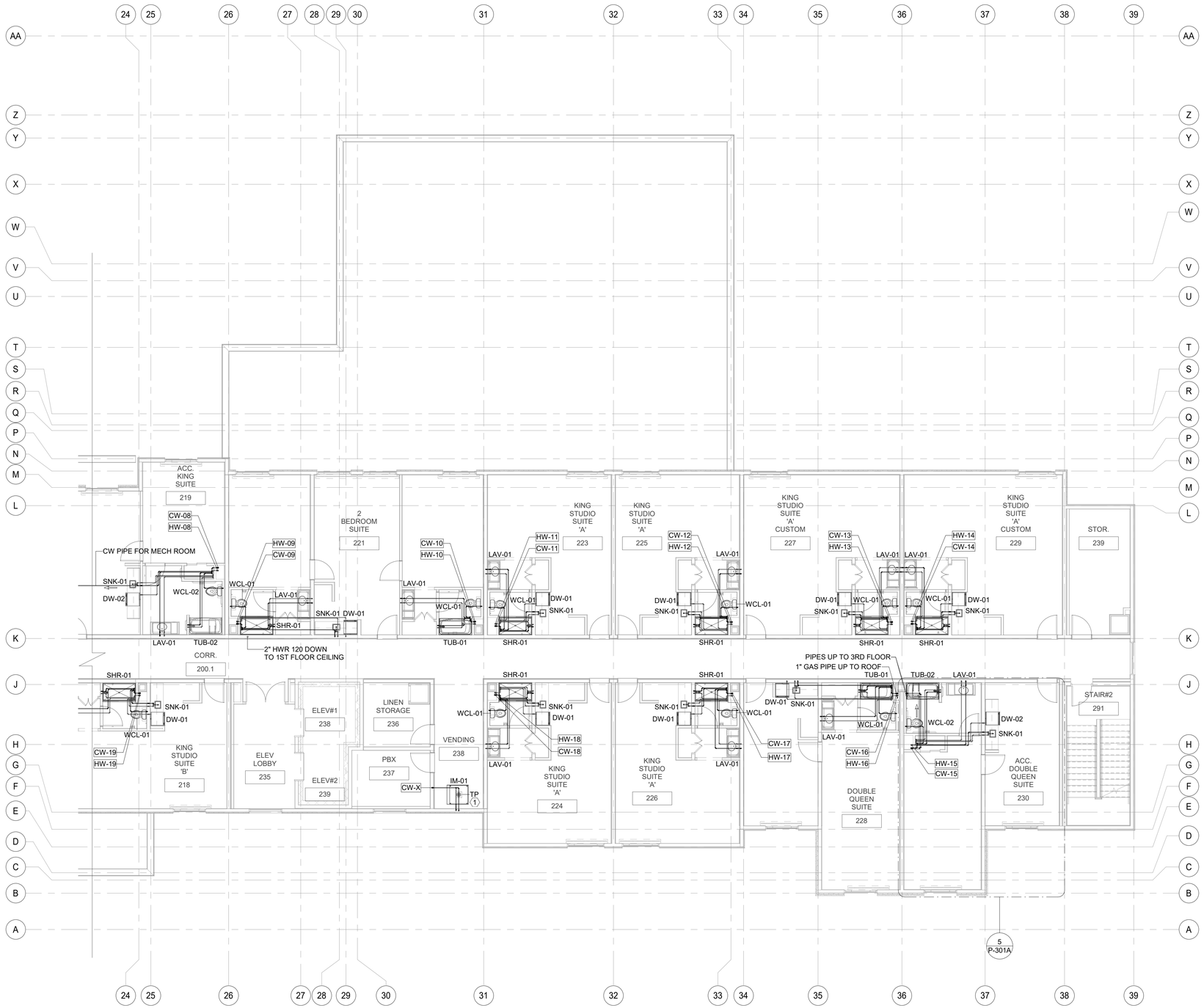

1 2ND FLOOR WATER & GAS SUPPLY PLAN PART-B
1/8" = 1'-0"

WATER SUPPLY KEYNOTE	
#	TEXT
1	PROVIDE AND INSTALL PRECISION PLUMBING PRODUCTS INC. #P1-500 TRAP PRIMER WITH 1/2" CW CONNECTION TO LINE INDICATED ON DRAWING. EXTEND OFF TOP OF LINE PER MANUFACTURER INSTRUCTIONS.(OR) PROVIDE AND INSTALL THE PROSET TRAP GUARD FLOOR DRAIN AS ALTERNATIVE.

B-20-0180
City of Puyallup

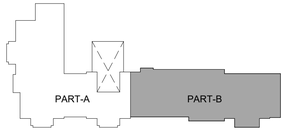

KEY PLAN FOR 2ND FLOOR-B
1" = 80'-0"

BASE4
2901 CLINT MOORE ROAD, #114
BOCA RATON, FLORIDA 33496
888.901.8008 www.base-4.com

RICARDO J. MUNIZ-GUILLET,AIA
5453 NW 106TH DR
CORAL SPRINGS, FL 33076

MEP ENGINEER
GARRY VERMAAS PhD, PE
2183 S BERRYS CHAPEL ROAD
FRANKLIN, TN 37069

Seal:

DATE: 2020.06.19
GARRY VERMAAS, PhD, PE
2183 S BERRYS CHAPEL ROAD
FRANKLIN TN 37069

Owner:

Dakota Legacy Group
-Hospitality Development-
4500 36TH AVE. S SUITE
200, FARGO, ND 58104
701.551.8000 (OFFICE)

HOMEWOOD SUITES BY HILTON

3500 S MERIDIAN, PUYALLUP, WA 98373

PROTOTYPE VERSION: V9.2 2014 FEB

ISSUE NO.	DELTA	ISSUE DATE	DESCRIPTION
1	P0	2020.02.21	ISSUED FOR PERMIT

CURRENT ISSUE

ISSUED FOR PERMIT

CURRENT ISSUE DATE
2020.02.21

DRAWN BY
NAT

CHECKED BY
GWV

PROJECT NO.
B4-124-1803

SHEET NAME

2ND FLOOR WATER & GAS SUPPLY PLAN-B

DRAWINGS NO.

P-203B

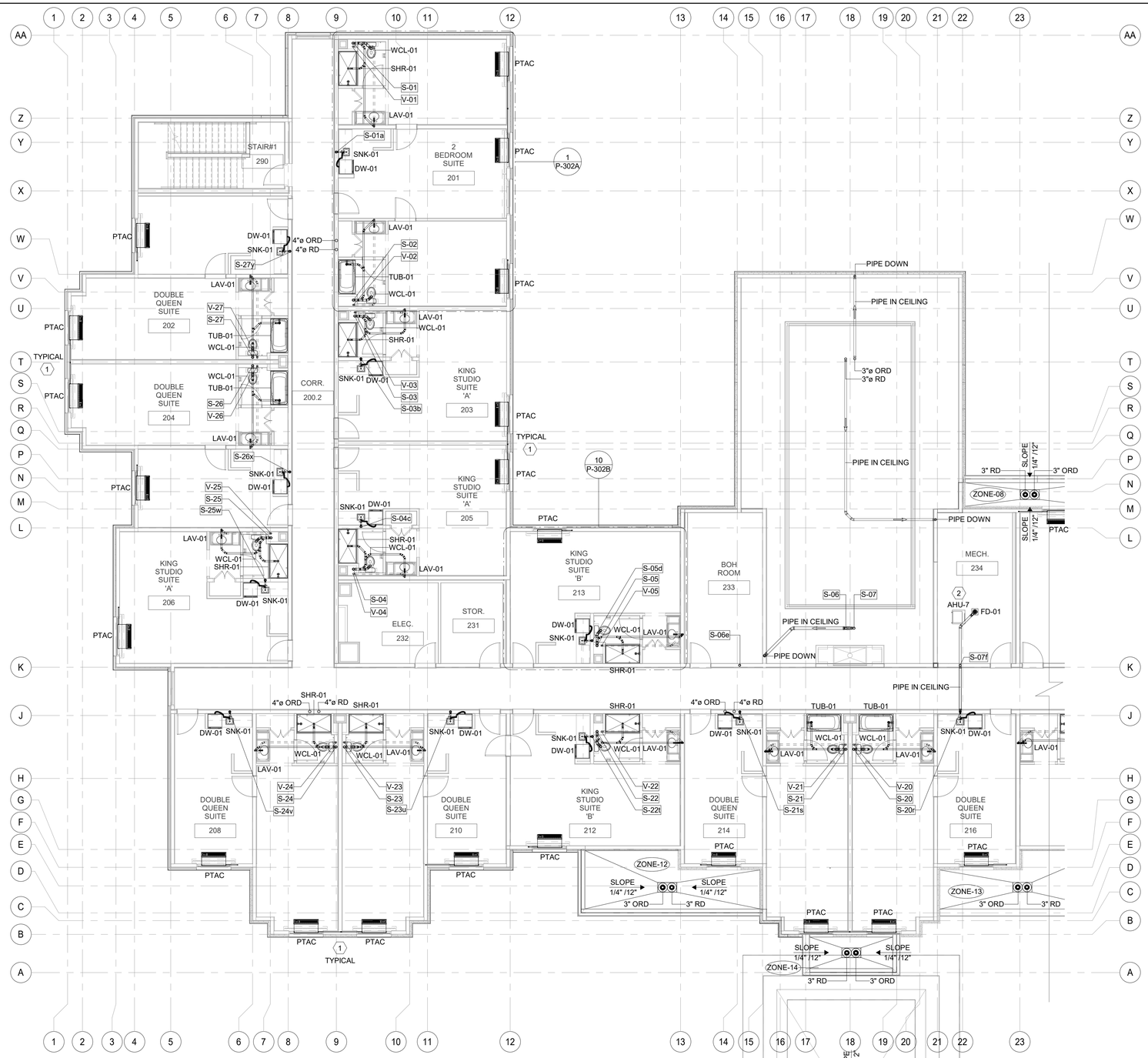

1 2ND FLOOR SANITARY & VENT PLAN PART-A
1/8" = 1'-0"

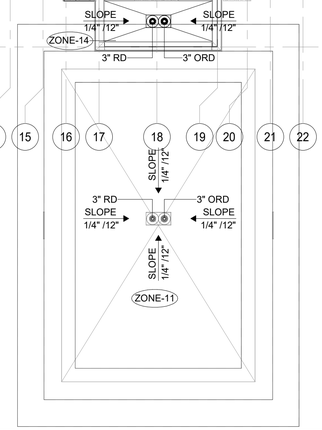

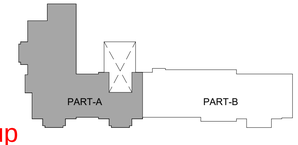

KEY PLAN FOR 2ND FLOOR-A
1" = 80'-0"

B-20-0180
City of Puyallup

GENERAL NOTE
1. ALL SANITARY & WATER PIPES WHICH ARE TO BE ROUTED THROUGH THE TRUSSES/TJI'S. TRUSS/TJI MANUFACTURER TO COORDINATE WITH PLUMBING CONTRACTOR ON SITE FOR TRUSS/TJI TO BE SPACED ACCORDINGLY TO AVOID CLASH.

SANITARY & VENT KEYNOTES.

#	TEXT
①	3/4" CONDENSATE RISER DOWN, SEE LOWER FLOOR PLANS FOR CONTINUATION. ROUTE EACH CONDENSATE VERTICAL RISER TO CONNECT TO NEAREST SANITARY LINE. GC TO COORDINATE CONNECTION & ENSURE SLOPE OF 1/8"FT FOR THE HORIZONTAL RUN OF PIPE. TYPICAL FOR ALL PTAC'S UNITS CONDENSATE DRAINAGE UNLESS NOTED OTHERWISE.
②	ALL FLOOR MOUNTED AHU SHALL INDIRECTLY CONNECT TO NEAREST FLOOR DRAIN & NEED TO CONNECT TO NEAREST SANITARY LINE. CONTRACTOR TO COORDINATE WITH THE CONNECTIONS & ENSURE SLOPE OF 1/8"PER FT IS MAINTAINED.

BASE4
2901 CLINT MOORE ROAD, #114
BOCA RATON, FLORIDA 33496
888.901.8008 www.base-4.com

RICARDO J. MUNIZ-GUILLET,AIA
5453 NW 106TH DR
CORAL SPRINGS, FL 33076

MEP ENGINEER
GARRY VERMAAS PhD, PE
2183 S BERRYS CHAPEL ROAD
FRANKLIN, TN 37069

Seal:

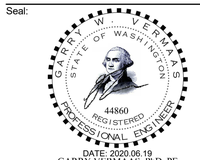

DATE: 2020.06.19
GARRY VERMAAS, PhD, PE
2183 S BERRYS CHAPEL ROAD
FRANKLIN TN 37069

Owner:

Dakota Legacy Group
-Hospitality Development-
4500 36TH AVE. S SUITE
200, FARGO, ND 58104
701.551.8000 (OFFICE)

HOMEWOOD SUITES BY HILTON

3500 S MERIDIAN, PUYALLUP, WA 98373

PROTOTYPE VERSION: V9.2 2014 FEB

ISSUE NO.	DELTA	ISSUE DATE	DESCRIPTION
1	P0	2020.02.21	ISSUED FOR PERMIT

CURRENT ISSUE

ISSUED FOR PERMIT

CURRENT ISSUE DATE
2020.02.21

DRAWN BY
NAT

CHECKED BY
GWV

PROJECT NO.
B4-124-1803

SHEET NAME

2ND FLOOR SANITARY & VENT PLAN-A

DRAWINGS NO.

P-204A

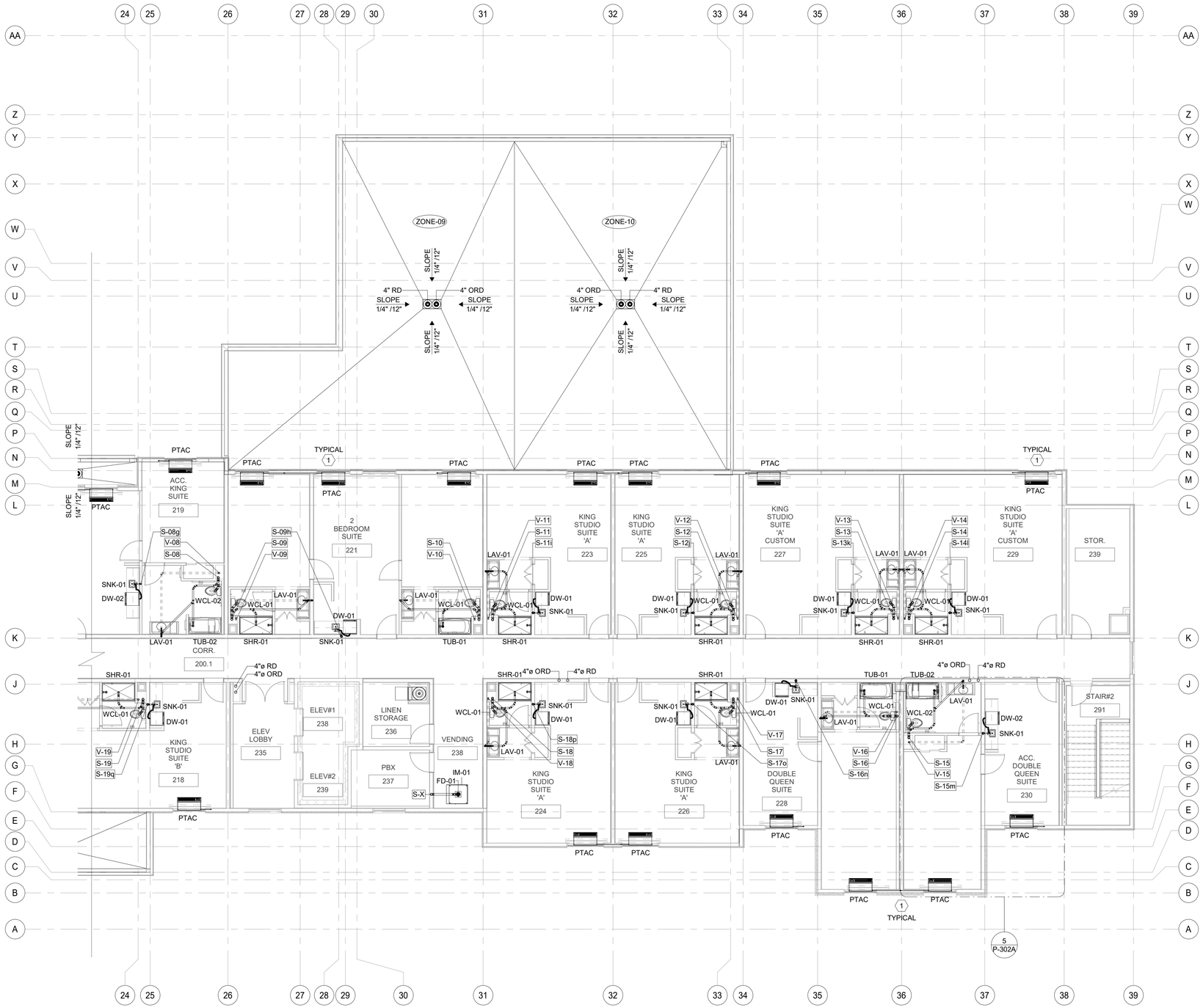

1 2ND FLOOR SANITARY & VENT PLAN PART-B
1/8" = 1'-0"

GENERAL NOTE
1. ALL SANITARY & WATER PIPES WHICH ARE TO BE ROUTED THROUGH THE TRUSSES/TJI'S. TRUSS/TJI MANUFACTURER TO COORDINATE WITH PLUMBING CONTRACTOR ON SITE FOR TRUSS/TJI TO BE SPACED ACCORDINGLY TO AVOID CLASH.

SANITARY & VENT KEYNOTE

#	TEXT
1	3/4" CONDENSATE RISER DOWN, SEE LOWER FLOOR PLANS FOR CONTINUATION. ROUTE EACH CONDENSATE VERTICAL RISER TO CONNECT TO NEAREST SANITARY LINE. GC TO COORDINATE CONNECTION & ENSURE SLOPE OF 1/8"FT FOR THE HORIZONTAL RUN OF PIPE. TYPICAL FOR ALL PTAC'S UNITS CONDENSATE DRAINAGE UNLESS NOTED OTHERWISE.

B-20-0180
City of Puyallup

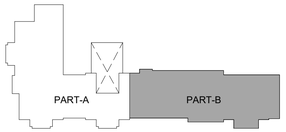

KEY PLAN FOR 2ND FLOOR-B
1" = 80'-0"

BASE4
2901 CLINT MOORE ROAD, #114
BOCA RATON, FLORIDA 33496
888.901.8008 www.base-4.com

RICARDO J. MUNIZ-GUILLET,AIA
5453 NW 106TH DR
CORAL SPRINGS, FL 33076

MEP ENGINEER
GARRY VERMAAS PhD, PE
2183 S BERRYS CHAPEL ROAD
FRANKLIN, TN 37069

Seal:

DATE: 2020.06.19
GARRY VERMAAS, PhD, PE
2183 S BERRYS CHAPEL ROAD
FRANKLIN TN 37069

Owner:

Dakota Legacy Group
-Hospitality Development-
4500 36TH AVE. S SUITE
200, FARGO, ND 58104
701.551.8000 (OFFICE)

HOMEWOOD SUITES BY HILTON
3500 S MERIDIAN, PUYALLUP, WA 98373

PROTOTYPE VERSION: V9.2 2014 FEB

ISSUE NO.	DELTA	ISSUE DATE	DESCRIPTION
1	P0	2020.02.21	ISSUED FOR PERMIT

CURRENT ISSUE
ISSUED FOR PERMIT

CURRENT ISSUE DATE
2020.02.21

DRAWN BY
NAT

CHECKED BY
GWV

PROJECT NO.
B4-124-1803

SHEET NAME
2ND FLOOR SANITARY & VENT PLAN-B

DRAWINGS NO.
P-204B

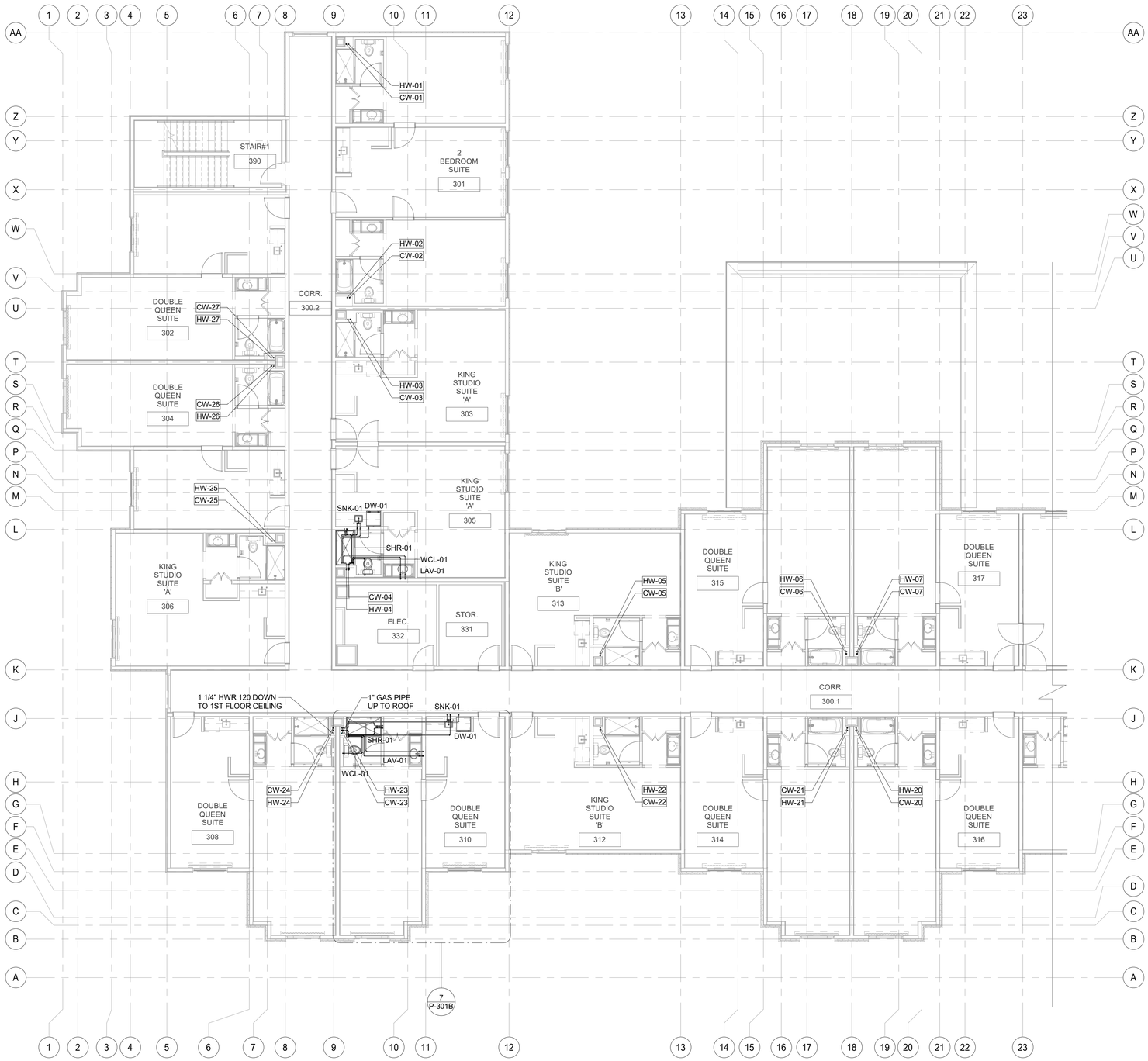

1 3RD FLOOR WATER & GAS SUPPLY PLAN PART-A
1/8" = 1'-0"

B-20-0180
City of Puyallup

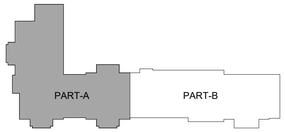

KEY PLAN FOR TYP. FLOOR-A
1" = 80'-0"

BASE4

BASE4
2901 CLINT MOORE ROAD, #114
BOCA RATON, FLORIDA 33496
888.901.8008 www.base-4.com

RICARDO J. MUNIZ-GUILLET,AIA
5453 NW 106TH DR
CORAL SPRINGS, FL 33076

MEP ENGINEER
GARRY VERMAAS PhD, PE
2183 S BERRYS CHAPEL ROAD
FRANKLIN, TN 37069

Seal:

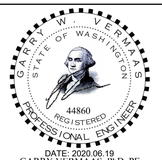

DATE: 2020.06.19
GARRY VERMAAS, PhD, PE
2183 S BERRYS CHAPEL ROAD
FRANKLIN TN 37069

Owner:

Dakota Legacy Group
-Hospitality Development-
4500 36TH AVE. S SUITE
200, FARGO, ND 58104
701.551.8000 (OFFICE)

HOMEWOOD SUITES BY HILTON

3500 S MERIDIAN, PUYALLUP, WA 98373

PROTOTYPE VERSION: V9.2 2014 FEB

ISSUE NO.	DELTA	ISSUE DATE	DESCRIPTION
1	P0	2020.02.21	ISSUED FOR PERMIT

CURRENT ISSUE

ISSUED FOR PERMIT

CURRENT ISSUE DATE
2020.02.21

DRAWN BY
NAT

CHECKED BY
GWV

PROJECT NO.
B4-124-1803

SHEET NAME

3RD FLOOR WATER & GAS SUPPLY PLAN-A

DRAWINGS NO.

P-205A

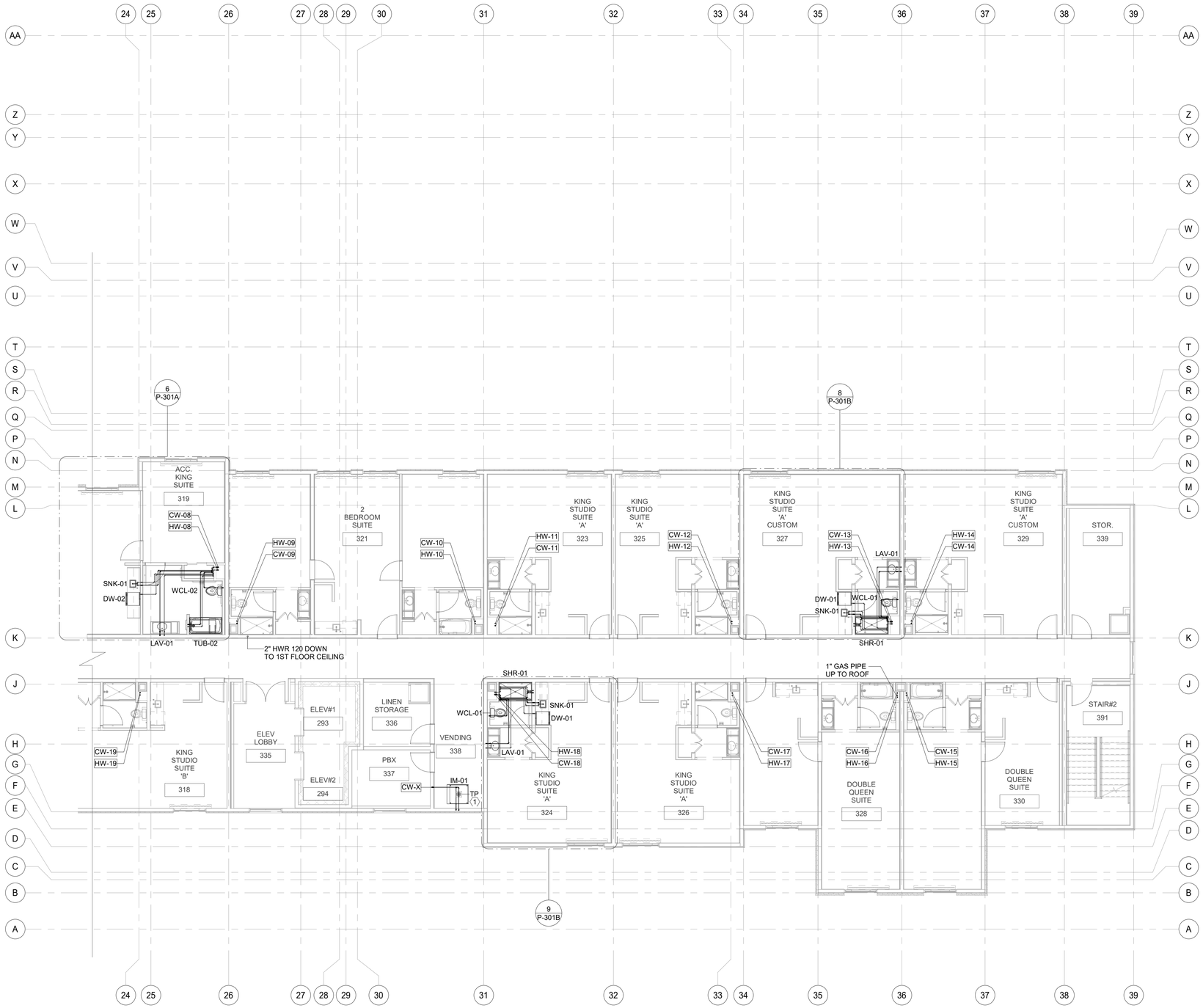

1 3RD FLOOR WATER & GAS SUPPLY PLAN PART-B
1/8" = 1'-0"

WATER SUPPLY KEYNOTE

#	TEXT
1	PROVIDE AND INSTALL PRECISION PLUMBING PRODUCTS INC. #P1-500 TRAP PRIMER WITH 1/2" CW CONNECTION TO LINE INDICATED ON DRAWING. EXTEND OFF TOP OF LINE PER MANUFACTURER INSTRUCTIONS.(OR) PROVIDE AND INSTALL THE PROSET TRAP GUARD FLOOR DRAIN AS ALTERNATIVE.

B-20-0180
City of Puyallup

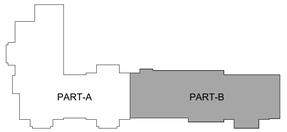

KEY PLAN FOR TYP. FLOOR-B
1" = 80'-0"

BASE4
2901 CLINT MOORE ROAD, #114
BOCA RATON, FLORIDA 33496
888.901.8008 www.base-4.com

RICARDO J. MUNIZ-GUILLET,AIA
5453 NW 106TH DR
CORAL SPRINGS, FL 33076

MEP ENGINEER
GARRY VERMAAS PhD, PE
2183 S BERRYS CHAPEL ROAD
FRANKLIN, TN 37069

Seal:

GARRY W. VERMAAS
STATE OF WASHINGTON
44860
REGISTERED
PROFESSIONAL ENGINEER

DATE: 2020.06.19
GARRY VERMAAS, PhD, PE
2183 S BERRYS CHAPEL ROAD
FRANKLIN TN 37069

Owner:

Dakota Legacy Group
-Hospitality Development-
4500 36TH AVE. S SUITE
200, FARGO, ND 58104
701.551.8000 (OFFICE)

HOMEWOOD SUITES BY HILTON
3500 S MERIDIAN, PUYALLUP, WA 98373
PROTOTYPE VERSION: V9.2 2014 FEB

ISSUE NO.	DELTA	ISSUE DATE	DESCRIPTION
1	P0	2020.02.21	ISSUED FOR PERMIT

CURRENT ISSUE
ISSUED FOR PERMIT

CURRENT ISSUE DATE
2020.02.21

DRAWN BY
NAT

CHECKED BY
GWV

PROJECT NO.
B4-124-1803

SHEET NAME
3RD FLOOR WATER & GAS SUPPLY PLAN-B

DRAWINGS NO.
P-205B

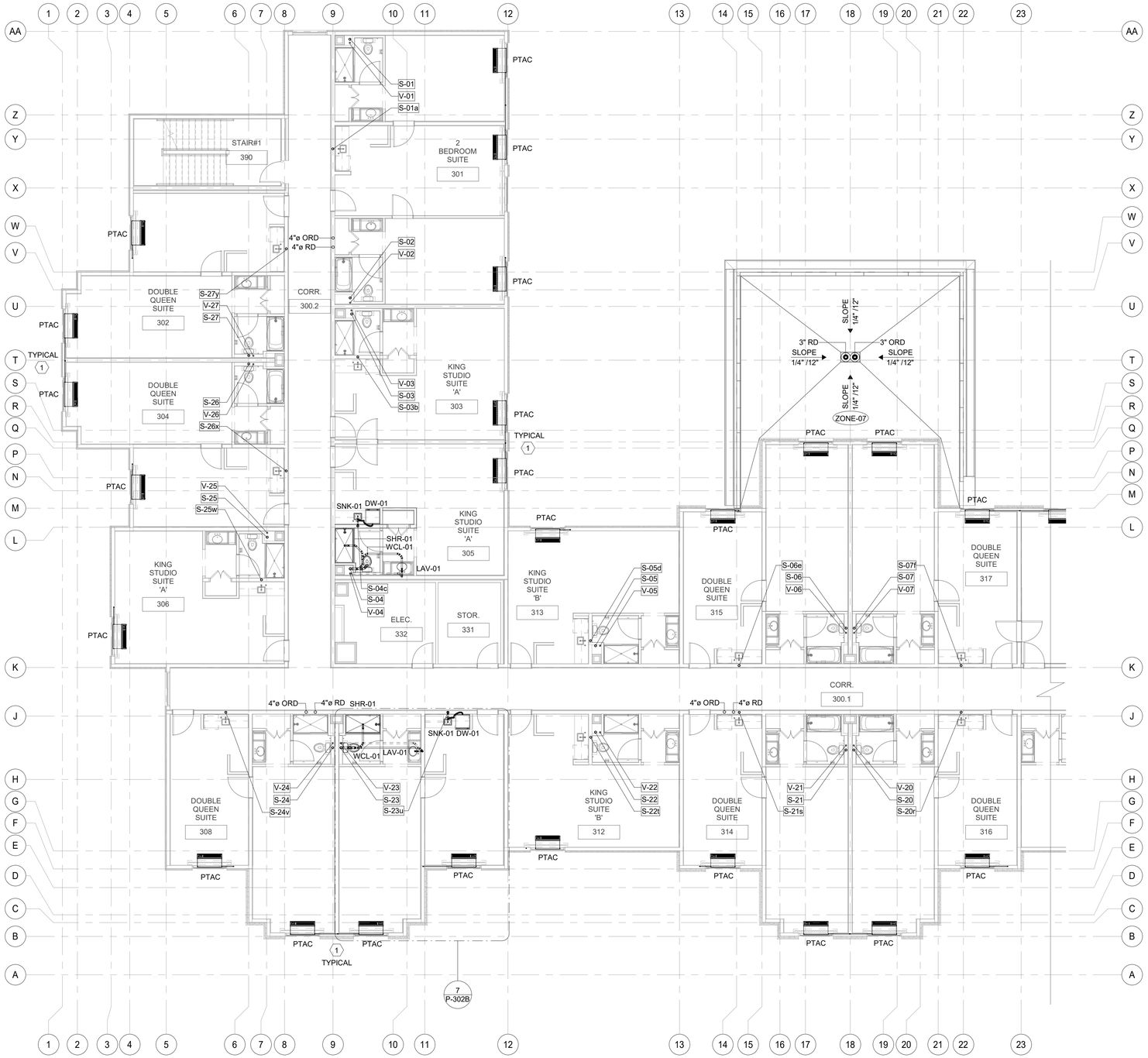

1 3RD FLOOR SANITARY & VENT PLAN PART-A
1/8" = 1'-0"

GENERAL NOTE
1. ALL SANITARY & WATER PIPES WHICH ARE TO BE ROUTED THROUGH THE TRUSSES/TJI'S. TRUSS/TJI MANUFACTURER TO COORDINATE WITH PLUMBING CONTRACTOR ON SITE FOR TRUSS/TJI TO BE SPACED ACCORDINGLY TO AVOID CLASH.

SANITARY & VENT KEYNOTE

#	TEXT
1	3/4" CONDENSATE RISER DOWN, SEE LOWER FLOOR PLANS FOR CONTINUATION. ROUTE EACH CONDENSATE VERTICAL RISER TO CONNECT TO NEAREST SANITARY LINE. GC TO COORDINATE CONNECTION & ENSURE SLOPE OF 1/8"FT FOR THE HORIZONTAL RUN OF PIPE. TYPICAL FOR ALL PTAC'S UNITS CONDENSATE DRAINAGE UNLESS NOTED OTHERWISE.

B-20-0180
City of Puyallup

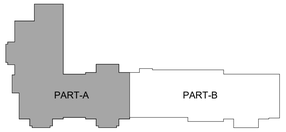

KEY PLAN FOR TYP. FLOOR-A
1" = 80'-0"

BASE4
2901 CLINT MOORE ROAD, #114
BOCA RATON, FLORIDA 33496
888.901.8008 www.base-4.com

RICARDO J. MUNIZ-GUILLET,AIA
5453 NW 106TH DR
CORAL SPRINGS, FL 33076

MEP ENGINEER
GARRY VERMAAS PhD, PE
2183 S BERRYS CHAPEL ROAD
FRANKLIN, TN 37069

Seal:

DATE: 2020.06.19
GARRY VERMAAS, PhD, PE
2183 S BERRYS CHAPEL ROAD
FRANKLIN TN 37069

Owner:

Dakota Legacy Group
-Hospitality Development-
4500 36TH AVE. S SUITE
200, FARGO, ND 58104
701.551.8000 (OFFICE)

HOMEWOOD SUITES BY HILTON

3500 S MERIDIAN, PUYALLUP, WA 98373

PROTOTYPE VERSION: V9.2 2014 FEB

ISSUE NO.	DELTA	ISSUE DATE	DESCRIPTION
1	P0	2020.02.21	ISSUED FOR PERMIT

CURRENT ISSUE

ISSUED FOR PERMIT

CURRENT ISSUE DATE
2020.02.21

DRAWN BY
NAT

CHECKED BY
GWV

PROJECT NO.
B4-124-1803

SHEET NAME

3RD FLOOR SANITARY & VENT PLAN-A

DRAWINGS NO.

P-206A

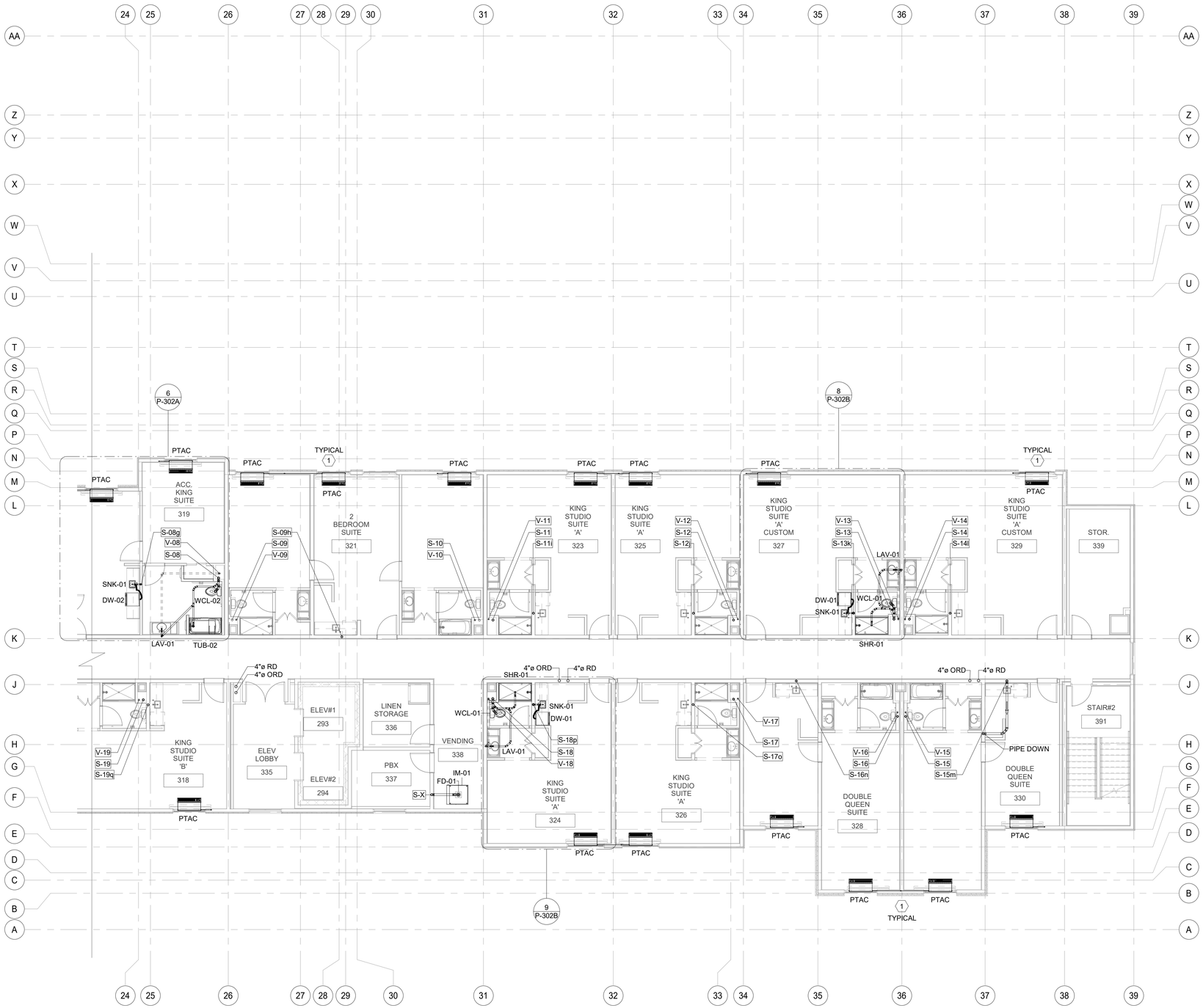

1 3RD FLOOR SANITARY & VENT PLAN PART-B
1/8" = 1'-0"

GENERAL NOTE
1. ALL SANITARY & WATER PIPES WHICH ARE TO BE ROUTED THROUGH THE TRUSSES/TJI'S. TRUSS/TJI MANUFACTURER TO COORDINATE WITH PLUMBING CONTRACTOR ON SITE FOR TRUSS/TJI TO BE SPACED ACCORDINGLY TO AVOID CLASH.

SANITARY & VENT KEYNOTE

#	TEXT
1	3/4" CONDENSATE RISER DOWN, SEE LOWER FLOOR PLANS FOR CONTINUATION. ROUTE EACH CONDENSATE VERTICAL RISER TO CONNECT TO NEAREST SANITARY LINE. GC TO COORDINATE CONNECTION & ENSURE SLOPE OF 1/8"FT FOR THE HORIZONTAL RUN OF PIPE. TYPICAL FOR ALL PTAC'S UNITS CONDENSATE DRAINAGE UNLESS NOTED OTHERWISE.

B-20-0180
City of Puyallup

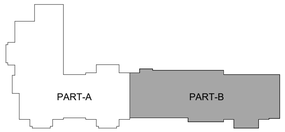

KEY PLAN FOR TYP. FLOOR-B
1" = 80'-0"

BASE4
2901 CLINT MOORE ROAD, #114
BOCA RATON, FLORIDA 33496
888.901.8008 www.base-4.com

RICARDO J. MUNIZ-GUILLET,AIA
5453 NW 106TH DR
CORAL SPRINGS, FL 33076

MEP ENGINEER
GARRY VERMAAS PhD, PE
2183 S BERRYS CHAPEL ROAD
FRANKLIN, TN 37069

Seal:

DATE: 2020.06.19
GARRY VERMAAS, PhD, PE
2183 S BERRYS CHAPEL ROAD
FRANKLIN TN 37069

Owner:

Dakota Legacy Group
-Hospitality Development-
4500 36TH AVE. S SUITE
200, FARGO, ND 58104
701.551.8000 (OFFICE)

HOMEWOOD SUITES BY HILTON

3500 S MERIDIAN, PUYALLUP, WA 98373

PROTOTYPE VERSION: V9.2 2014 FEB

ISSUE NO.	DELTA	ISSUE DATE	DESCRIPTION
1	P0	2020.02.21	ISSUED FOR PERMIT

CURRENT ISSUE

ISSUED FOR PERMIT

CURRENT ISSUE DATE
2020.02.21

DRAWN BY
NAT

CHECKED BY
GWV

PROJECT NO.
B4-124-1803

SHEET NAME

3RD FLOOR SANITARY & VENT PLAN-B

DRAWINGS NO.

P-206B

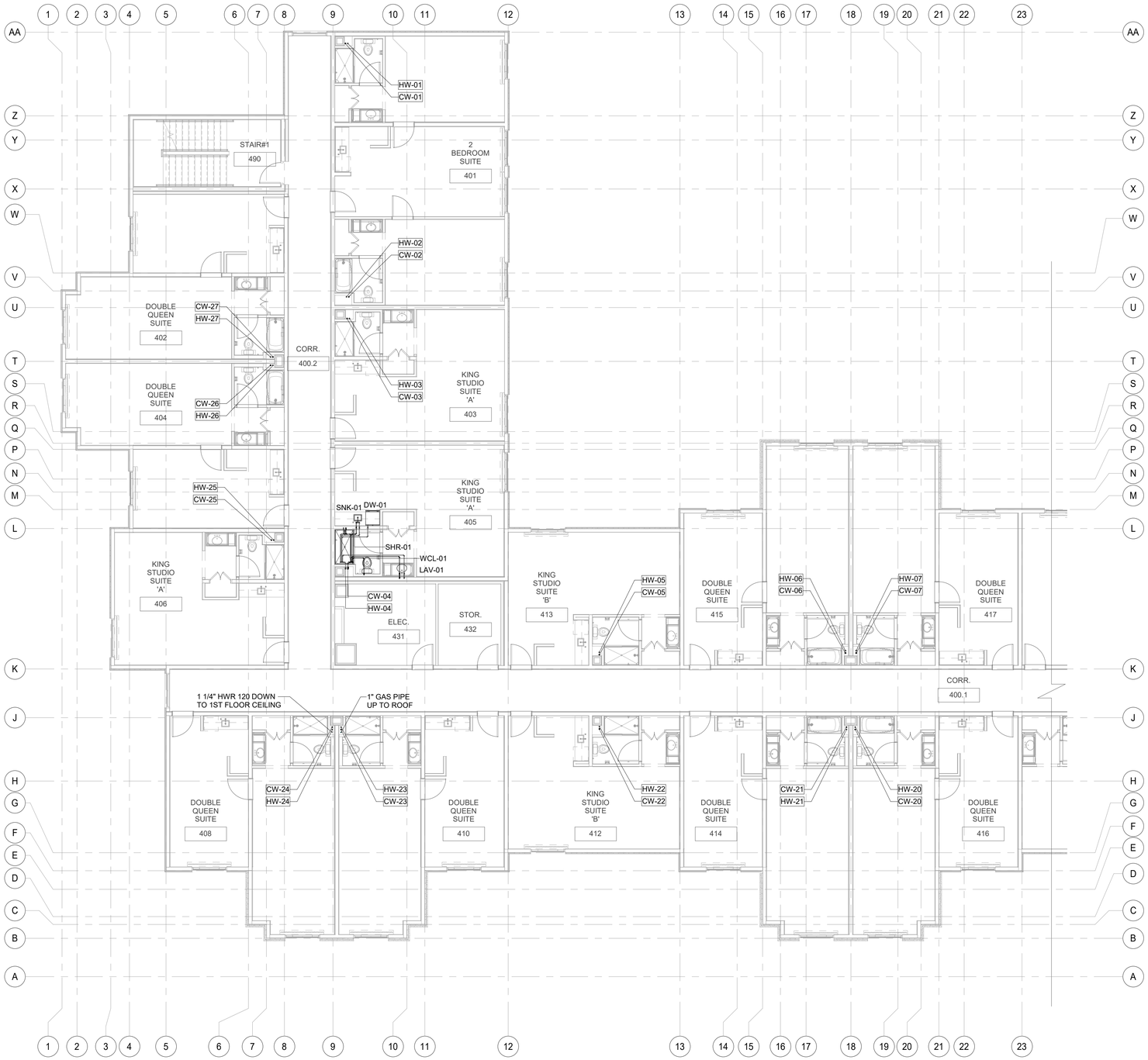

1 4TH FLOOR WATER & GAS SUPPLY PLAN PART-A
1/8" = 1'-0"

B-20-0180
City of Puyallup

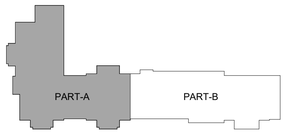

KEY PLAN FOR TYP. FLOOR-A
1" = 80'-0"

BASE4

BASE4
2901 CLINT MOORE ROAD, #114
BOCA RATON, FLORIDA 33496
888.901.8008 www.base-4.com

RICARDO J. MUNIZ-GUILLET,AIA
5453 NW 106TH DR
CORAL SPRINGS, FL 33076

MEP ENGINEER
GARRY VERMAAS PhD, PE
2183 S BERRYS CHAPEL ROAD
FRANKLIN, TN 37069

Seal:

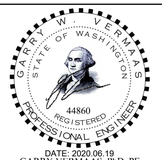

DATE: 2020.06.19
GARRY VERMAAS, PhD, PE
2183 S BERRYS CHAPEL ROAD
FRANKLIN TN 37069

Owner:

Dakota Legacy Group
-Hospitality Development-
4500 36TH AVE. S SUITE
200, FARGO, ND 58104
701.551.8000 (OFFICE)

HOMEWOOD SUITES BY HILTON

3500 S MERIDIAN, PUYALLUP, WA 98373

PROTOTYPE VERSION: V9.2 2014 FEB

ISSUE NO.	DELTA	ISSUE DATE	DESCRIPTION
1	P0	2020.02.21	ISSUED FOR PERMIT

CURRENT ISSUE

ISSUED FOR PERMIT

CURRENT ISSUE DATE
2020.02.21

DRAWN BY
NAT

CHECKED BY
GWV

PROJECT NO.
B4-124-1803

SHEET NAME

4TH FLOOR WATER & GAS SUPPLY PLAN-A

DRAWINGS NO.

P-207A

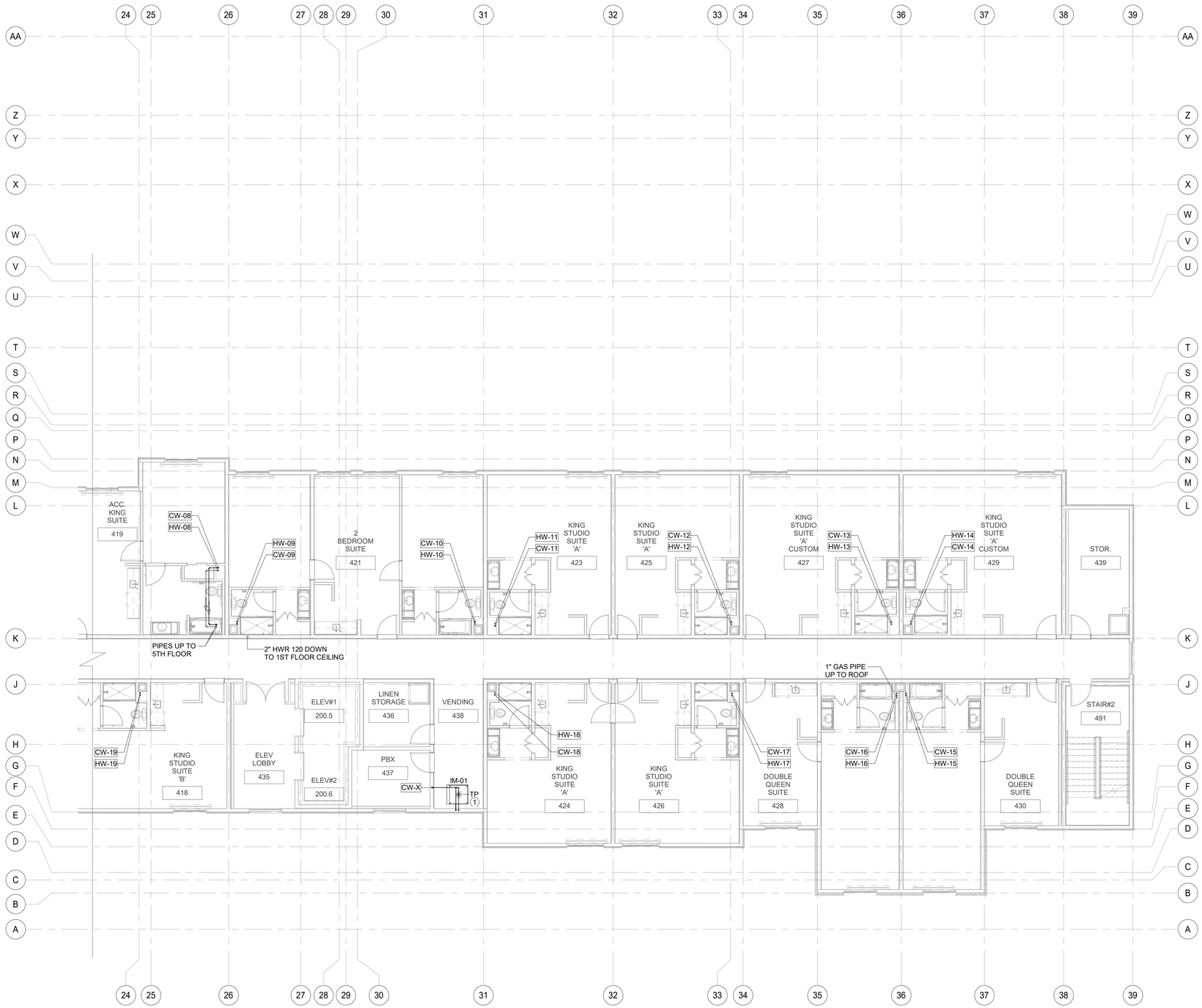

1 4TH FLOOR WATER & GAS SUPPLY PLAN PART-B
1/8" = 1'-0"

WATER SUPPLY KEYNOTE

#	TEXT
1	PROVIDE AND INSTALL PRECISION PLUMBING PRODUCTS INC. #P1-500 TRAP PRIMER WITH 1/2" CW CONNECTION TO LINE INDICATED ON DRAWING. EXTEND OFF TOP OF LINE PER MANUFACTURER INSTRUCTIONS.(OR) PROVIDE AND INSTALL THE PROSET TRAP GUARD FLOOR DRAIN AS ALTERNATIVE.

B-20-0180
City of Puyallup

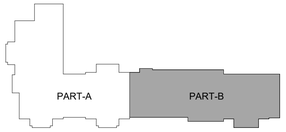

KEY PLAN FOR TYP. FLOOR-B
1" = 80'-0"

BASE4
2901 CLINT MOORE ROAD, #114
BOCA RATON, FLORIDA 33496
888.901.8008 www.base-4.com

RICARDO J. MUNIZ-GUILLET,AIA
5453 NW 106TH DR
CORAL SPRINGS, FL 33076

MEP ENGINEER
GARRY VERMAAS PhD, PE
2183 S BERRYS CHAPEL ROAD
FRANKLIN, TN 37069

Seal:

DATE: 2020.06.19
GARRY VERMAAS, PhD, PE
2183 S BERRYS CHAPEL ROAD
FRANKLIN TN 37069

Owner:

Dakota Legacy Group
-Hospitality Development-
4500 36TH AVE. S SUITE
200, FARGO, ND 58104
701.551.8000 (OFFICE)

HOMEWOOD SUITES BY HILTON
3500 S MERIDIAN, PUYALLUP, WA 98373
PROTOTYPE VERSION: V9.2 2014 FEB

ISSUE NO.	DELTA	ISSUE DATE	DESCRIPTION
1	P0	2020.02.21	ISSUED FOR PERMIT

CURRENT ISSUE
ISSUED FOR PERMIT

CURRENT ISSUE DATE
2020.02.21

DRAWN BY
NAT

CHECKED BY
GWV

PROJECT NO.
B4-124-1803

SHEET NAME
4TH FLOOR WATER & GAS SUPPLY PLAN-B

DRAWINGS NO.
P-207B

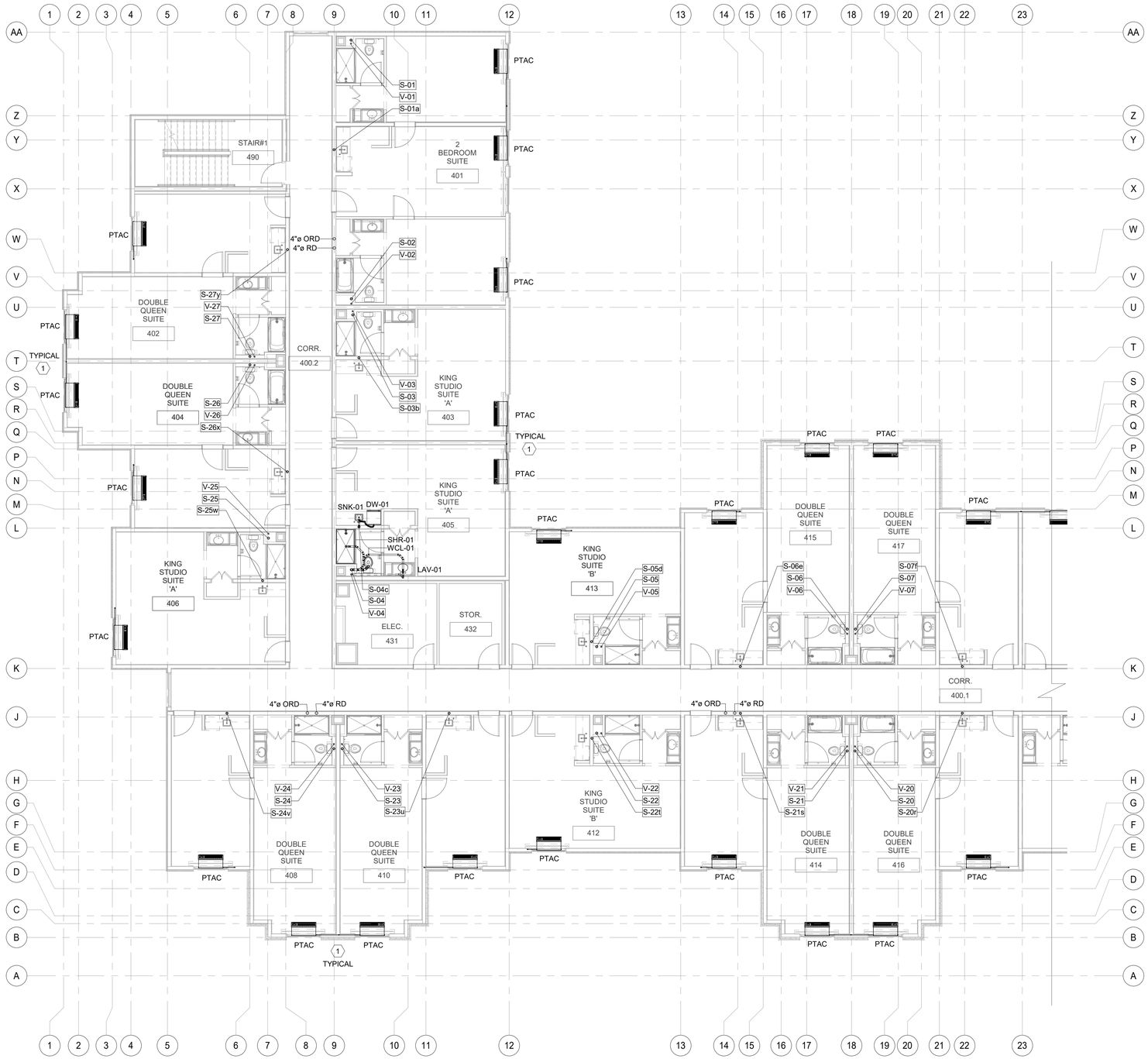

1 4TH FLOOR SANITARY & VENT PLAN PART-A
1/8" = 1'-0"

GENERAL NOTE

1. ALL SANITARY & WATER PIPES WHICH ARE TO BE ROUTED THROUGH THE TRUSSES/TJI'S. TRUSS/TJI MANUFACTURER TO COORDINATE WITH PLUMBING CONTRACTOR ON SITE FOR TRUSS/TJI TO BE SPACED ACCORDINGLY TO AVOID CLASH.

SANITARY & VENT KEYNOTE

#	TEXT
1	3/4" CONDENSATE RISER DOWN, SEE LOWER FLOOR PLANS FOR CONTINUATION. ROUTE EACH CONDENSATE VERTICAL RISER TO CONNECT TO NEAREST SANITARY LINE. GC TO COORDINATE CONNECTION & ENSURE SLOPE OF 1/8"FT FOR THE HORIZONTAL RUN OF PIPE. TYPICAL FOR ALL PTAC'S UNITS CONDENSATE DRAINAGE UNLESS NOTED OTHERWISE.

B-20-0180
City of Puyallup

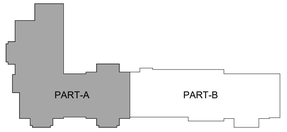

KEY PLAN FOR TYP. FLOOR-A
1" = 80'-0"

BASE4
2901 CLINT MOORE ROAD, #114
BOCA RATON, FLORIDA 33496
888.901.8008 www.base-4.com

RICARDO J. MUNIZ-GUILLET,AIA
5453 NW 106TH DR
CORAL SPRINGS, FL 33076

MEP ENGINEER
GARRY VERMAAS PhD, PE
2183 S BERRYS CHAPEL ROAD
FRANKLIN, TN 37069

Seal:

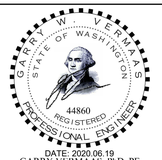

DATE: 2020.06.19
GARRY VERMAAS, PhD, PE
2183 S BERRYS CHAPEL ROAD
FRANKLIN TN 37069

Owner:

Dakota Legacy Group
-Hospitality Development-
4500 36TH AVE. S SUITE
200, FARGO, ND 58104
701.551.8000 (OFFICE)

HOMEWOOD SUITES BY HILTON

3500 S MERIDIAN, PUYALLUP, WA 98373

PROTOTYPE VERSION: V9.2 2014 FEB

ISSUE NO.	DELTA	ISSUE DATE	DESCRIPTION
1	P0	2020.02.21	ISSUED FOR PERMIT

CURRENT ISSUE

ISSUED FOR PERMIT

CURRENT ISSUE DATE
2020.02.21

DRAWN BY
NAT

CHECKED BY
GWV

PROJECT NO.
B4-124-1803

SHEET NAME

4TH FLOOR SANITARY & VENT PLAN-A

DRAWINGS NO.

P-208A

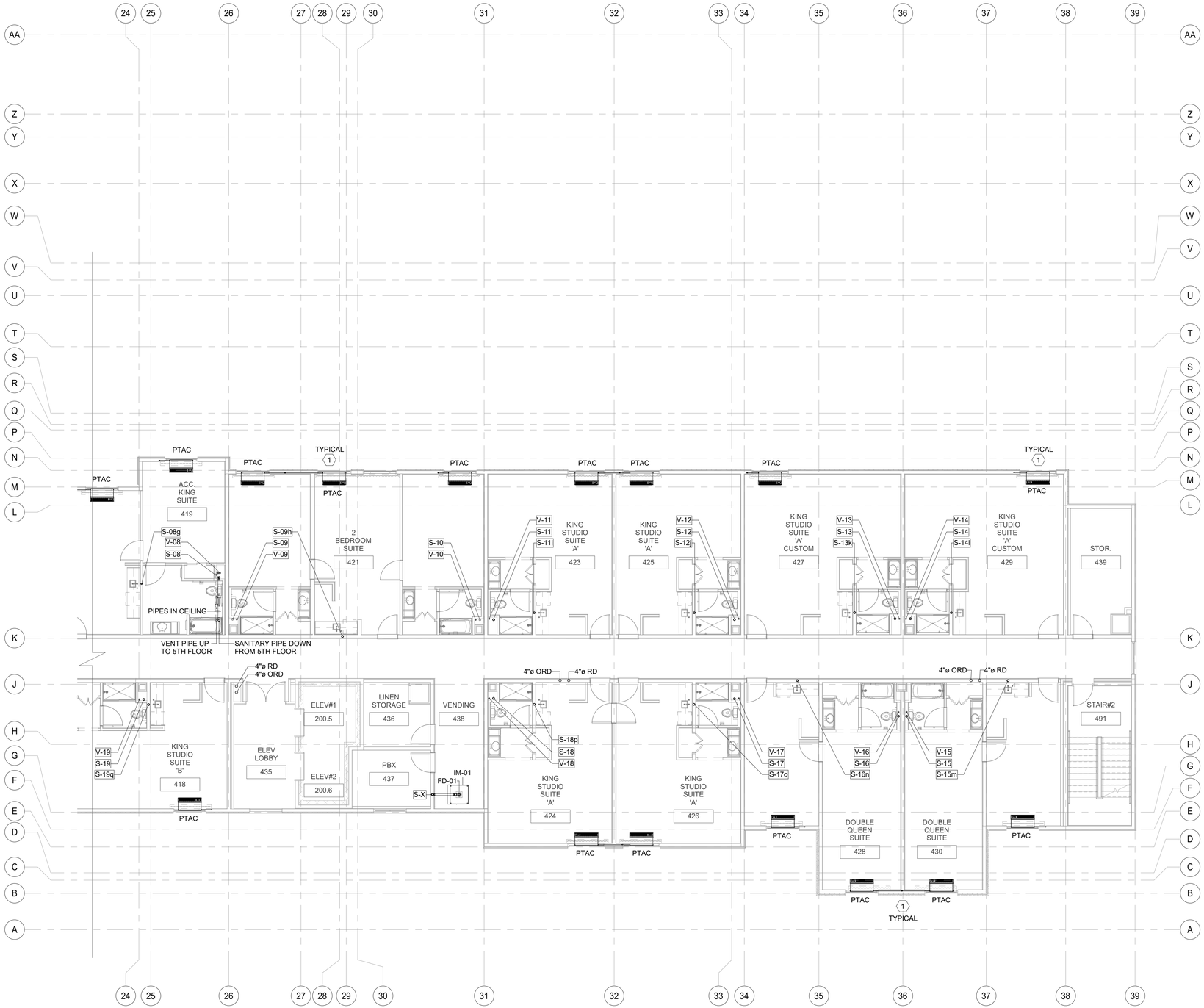

1 4TH FLOOR SANITARY & VENT PLAN PART-B
1/8" = 1'-0"

GENERAL NOTE

1. ALL SANITARY & WATER PIPES WHICH ARE TO BE ROUTED THROUGH THE TRUSSES/TJI'S. TRUSS/TJI MANUFACTURER TO COORDINATE WITH PLUMBING CONTRACTOR ON SITE FOR TRUSS/TJI TO BE SPACED ACCORDINGLY TO AVOID CLASH.

SANITARY & VENT KEYNOTE

#	TEXT
1	3/4" CONDENSATE RISER DOWN, SEE LOWER FLOOR PLANS FOR CONTINUATION. ROUTE EACH CONDENSATE VERTICAL RISER TO CONNECT TO NEAREST SANITARY LINE. GC TO COORDINATE CONNECTION & ENSURE SLOPE OF 1/8"FT FOR THE HORIZONTAL RUN OF PIPE. TYPICAL FOR ALL PTAC'S UNITS CONDENSATE DRAINAGE UNLESS NOTED OTHERWISE.

B-20-0180
City of Puyallup

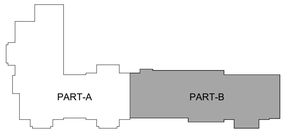

KEY PLAN FOR TYP. FLOOR-B
1" = 80'-0"

BASE4
2901 CLINT MOORE ROAD, #114
BOCA RATON, FLORIDA 33496
888.901.8008 www.base-4.com

RICARDO J. MUNIZ-GUILLET,AIA
5453 NW 106TH DR
CORAL SPRINGS, FL 33076

MEP ENGINEER
GARRY VERMAAS PhD, PE
2183 S BERRYS CHAPEL ROAD
FRANKLIN, TN 37069

Seal:

DATE: 2020.06.19
GARRY VERMAAS, PhD, PE
2183 S BERRYS CHAPEL ROAD
FRANKLIN TN 37069

Owner:

Dakota Legacy Group
-Hospitality Development-
4500 36TH AVE. S SUITE
200, FARGO, ND 58104
701.551.8000 (OFFICE)

HOMEWOOD SUITES BY HILTON

3500 S MERIDIAN, PUYALLUP, WA 98373

PROTOTYPE VERSION: V9.2 2014 FEB

ISSUE NO.	DELTA	ISSUE DATE	DESCRIPTION
1	P0	2020.02.21	ISSUED FOR PERMIT

CURRENT ISSUE

ISSUED FOR PERMIT

CURRENT ISSUE DATE
2020.02.21

DRAWN BY
NAT

CHECKED BY
GWV

PROJECT NO.
B4-124-1803

SHEET NAME

4TH FLOOR SANITARY & VENT PLAN-B

DRAWINGS NO.

P-208B

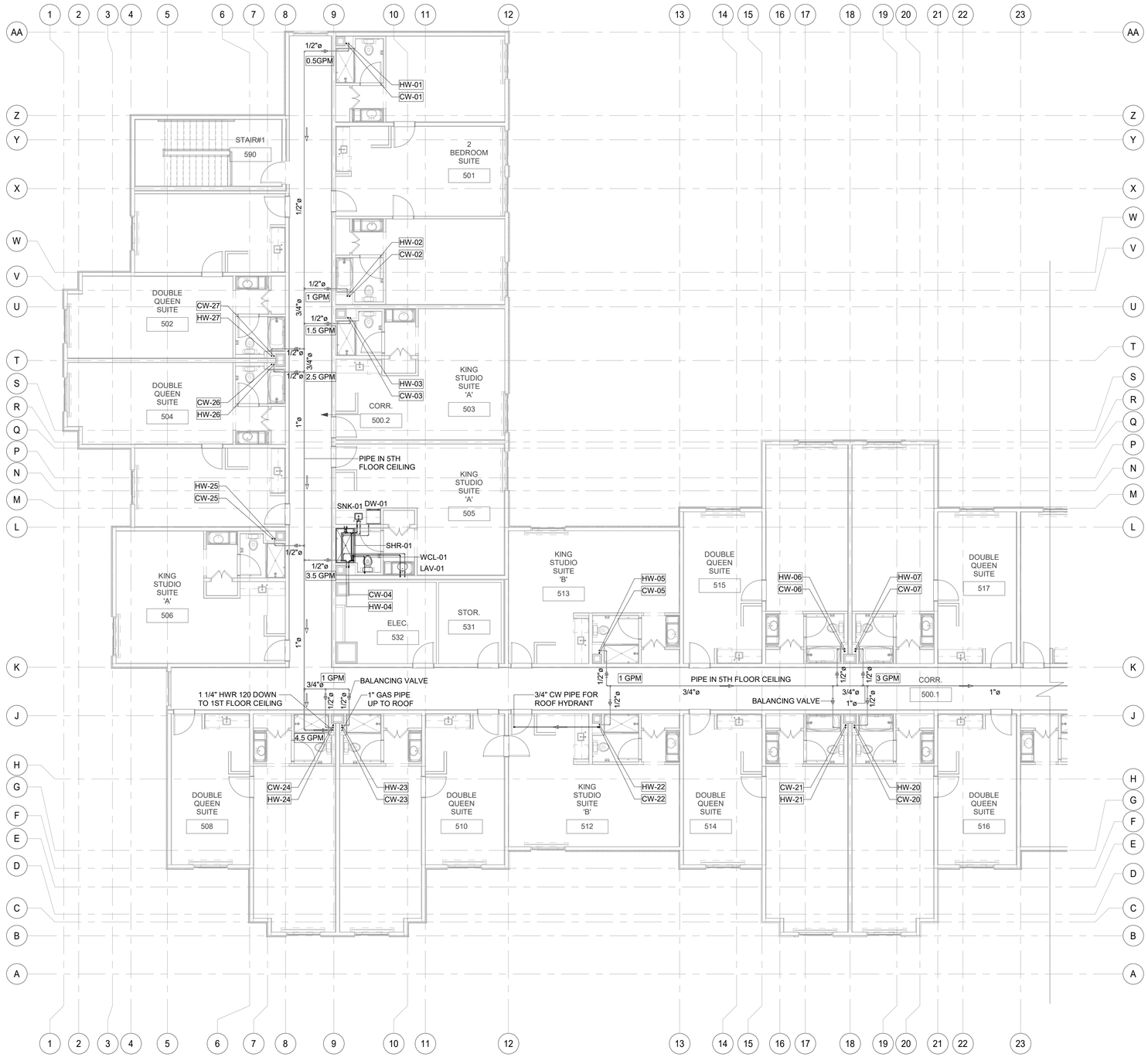

1 5TH FLOOR WATER & GAS SUPPLY PLAN PART-A
1/8" = 1'-0"

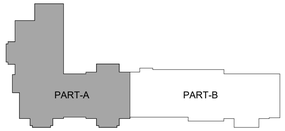

KEY PLAN FOR TYP. FLOOR-A
1" = 80'-0"

B-20-0180
City of Puyallup

BASE4

BASE4
2901 CLINT MOORE ROAD, #114
BOCA RATON, FLORIDA 33496
888.901.8008 www.base-4.com

RICARDO J. MUNIZ-GUILLET,AIA
5453 NW 106TH DR
CORAL SPRINGS, FL 33076

MEP ENGINEER
GARRY VERMAAS PhD, PE
2183 S BERRYS CHAPEL ROAD
FRANKLIN, TN 37069

Seal:

DATE: 2020.06.19
GARRY VERMAAS, PhD, PE
2183 S BERRYS CHAPEL ROAD
FRANKLIN TN 37069

Owner:

Dakota Legacy Group
-Hospitality Development-
4500 36TH AVE. S SUITE
200, FARGO, ND 58104
701.551.8000 (OFFICE)

HOMEWOOD SUITES BY HILTON

3500 S MERIDIAN, PUYALLUP, WA 98373

PROTOTYPE VERSION: V9.2 2014 FEB

ISSUE NO.	DELTA	ISSUE DATE	DESCRIPTION
1	P0	2020.02.21	ISSUED FOR PERMIT

CURRENT ISSUE

ISSUED FOR PERMIT

CURRENT ISSUE DATE
2020.02.21

DRAWN BY
NAT

CHECKED BY
GWV

PROJECT NO.
B4-124-1803

SHEET NAME

5TH FLOOR WATER & GAS SUPPLY PLAN-A

DRAWINGS NO.

P-209A

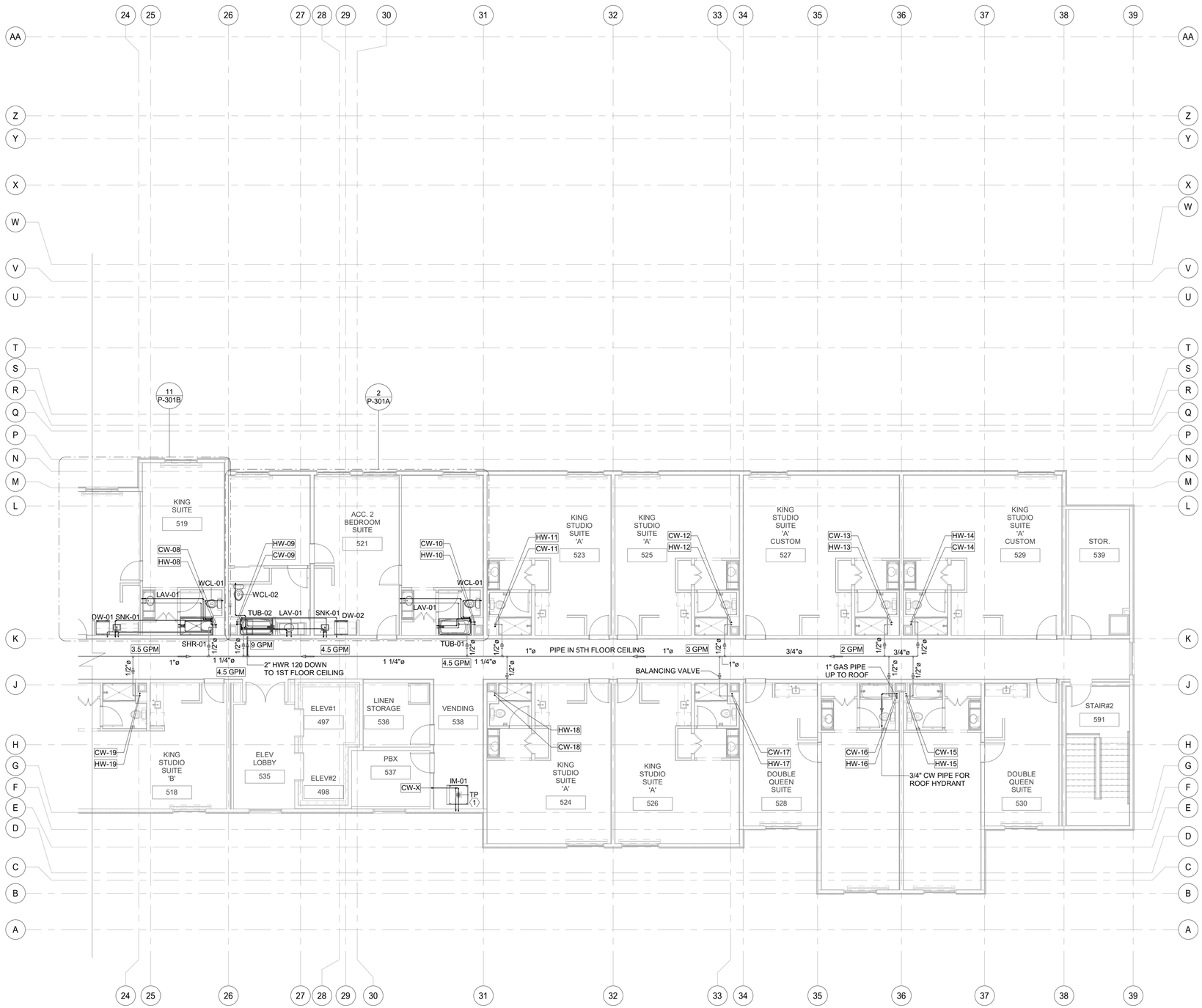

1 5TH FLOOR WATER & GAS SUPPLY PLAN PART-B
1/8" = 1'-0"

WATER SUPPLY KEYNOTE

#	TEXT
1	PROVIDE AND INSTALL PRECISION PLUMBING PRODUCTS INC. #P1-500 TRAP PRIMER WITH 1/2" CW CONNECTION TO LINE INDICATED ON DRAWING. EXTEND OFF TOP OF LINE PER MANUFACTURER INSTRUCTIONS.(OR) PROVIDE AND INSTALL THE PROSET TRAP GUARD FLOOR DRAIN AS ALTERNATIVE.

B-20-0180
City of Puyallup

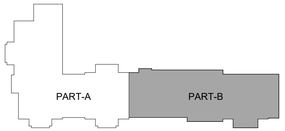

KEY PLAN FOR TYP. FLOOR-B
1" = 80'-0"

BASE4
2901 CLINT MOORE ROAD, #114
BOCA RATON, FLORIDA 33496
888.901.8008 www.base-4.com

RICARDO J. MUNIZ-GUILLET,AIA
5453 NW 106TH DR
CORAL SPRINGS, FL 33076

MEP ENGINEER
GARRY VERMAAS PhD, PE
2183 S BERRYS CHAPEL ROAD
FRANKLIN, TN 37069

Seal:

GARRY W. VERMAAS
STATE OF WASHINGTON
44860
REGISTERED
PROFESSIONAL ENGINEER

DATE: 2020.06.19
GARRY VERMAAS, PhD, PE
2183 S BERRYS CHAPEL ROAD
FRANKLIN TN 37069

Owner:

Dakota Legacy Group
-Hospitality Development-
4500 36TH AVE. S SUITE
200, FARGO, ND 58104
701.551.8000 (OFFICE)

HOMEWOOD SUITES BY HILTON
3500 S MERIDIAN, PUYALLUP, WA 98373
PROTOTYPE VERSION: V9.2 2014 FEB

ISSUE NO.	DELTA	ISSUE DATE	DESCRIPTION
1	P0	2020.02.21	ISSUED FOR PERMIT

CURRENT ISSUE
ISSUED FOR PERMIT

CURRENT ISSUE DATE
2020.02.21

DRAWN BY
NAT

CHECKED BY
GWV

PROJECT NO.
B4-124-1803

SHEET NAME
5TH FLOOR WATER & GAS SUPPLY PLAN-B

DRAWINGS NO.
P-209B

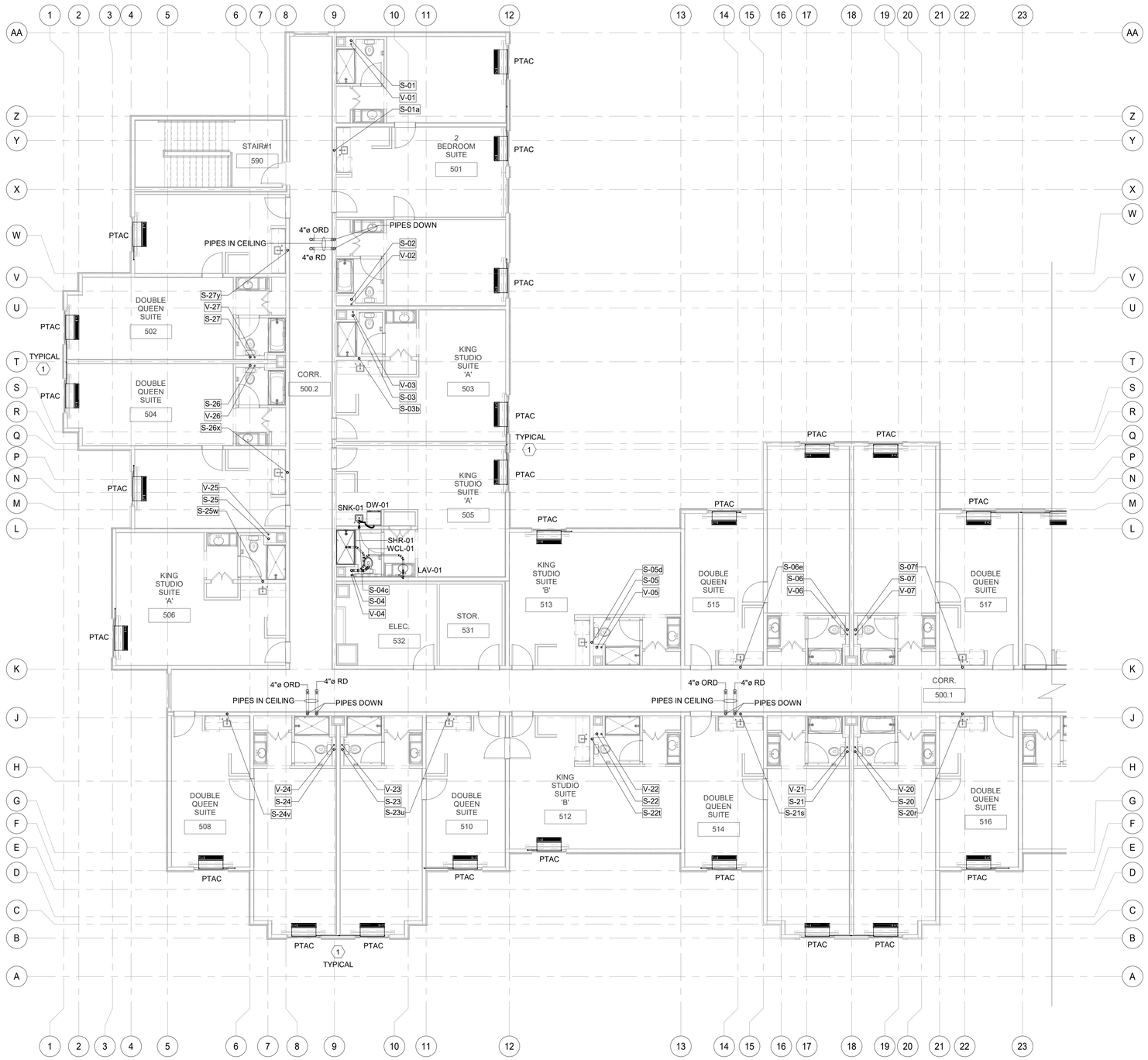

1 5TH FLOOR SANITARY & VENT PLAN PART-A
1/8" = 1'-0"

GENERAL NOTE
1. ALL SANITARY & WATER PIPES WHICH ARE TO BE ROUTED THROUGH THE TRUSSES/TJI'S. TRUSS/TJI MANUFACTURER TO COORDINATE WITH PLUMBING CONTRACTOR ON SITE FOR TRUSS/TJI TO BE SPACED ACCORDINGLY TO AVOID CLASH.

SANITARY & VENT KEYNOTE

#	TEXT
1	3/4" CONDENSATE RISER DOWN, SEE LOWER FLOOR PLANS FOR CONTINUATION. ROUTE EACH CONDENSATE VERTICAL RISER TO CONNECT TO NEAREST SANITARY LINE. GC TO COORDINATE CONNECTION & ENSURE SLOPE OF 1/8"FT FOR THE HORIZONTAL RUN OF PIPE. TYPICAL FOR ALL PTAC'S UNITS CONDENSATE DRAINAGE UNLESS NOTED OTHERWISE.

B-20-0180
City of Puyallup

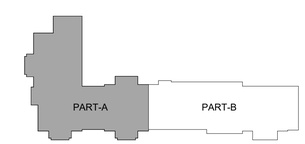

KEY PLAN FOR TYP. FLOOR-A
1" = 80'-0"

BASE4
2901 CLINT MOORE ROAD, #114
BOCA RATON, FLORIDA 33496
888.901.8008 www.base-4.com

RICARDO J. MUNIZ-GUILLET,AIA
5453 NW 106TH DR
CORAL SPRINGS, FL 33076

MEP ENGINEER
GARRY VERMAAS PhD, PE
2183 S BERRYS CHAPEL ROAD
FRANKLIN, TN 37069

Seal:

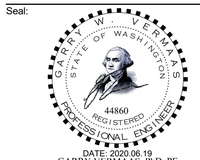

DATE: 2020.06.19
GARRY VERMAAS, PhD, PE
2183 S BERRYS CHAPEL ROAD
FRANKLIN TN 37069

Owner:

Dakota Legacy Group
-Hospitality Development-
4500 36TH AVE. S SUITE
200, FARGO, ND 58104
701.551.8000 (OFFICE)

HOMEWOOD SUITES BY HILTON

3500 S MERIDIAN, PUYALLUP, WA 98373

PROTOTYPE VERSION: V9.2 2014 FEB

ISSUE NO.	DELTA	ISSUE DATE	DESCRIPTION
1	P0	2020.02.21	ISSUED FOR PERMIT

CURRENT ISSUE

ISSUED FOR PERMIT

CURRENT ISSUE DATE
2020.02.21

DRAWN BY
NAT

CHECKED BY
GWV

PROJECT NO.
B4-124-1803

SHEET NAME

5TH FLOOR SANITARY & VENT PLAN-A

DRAWINGS NO.

P-210A

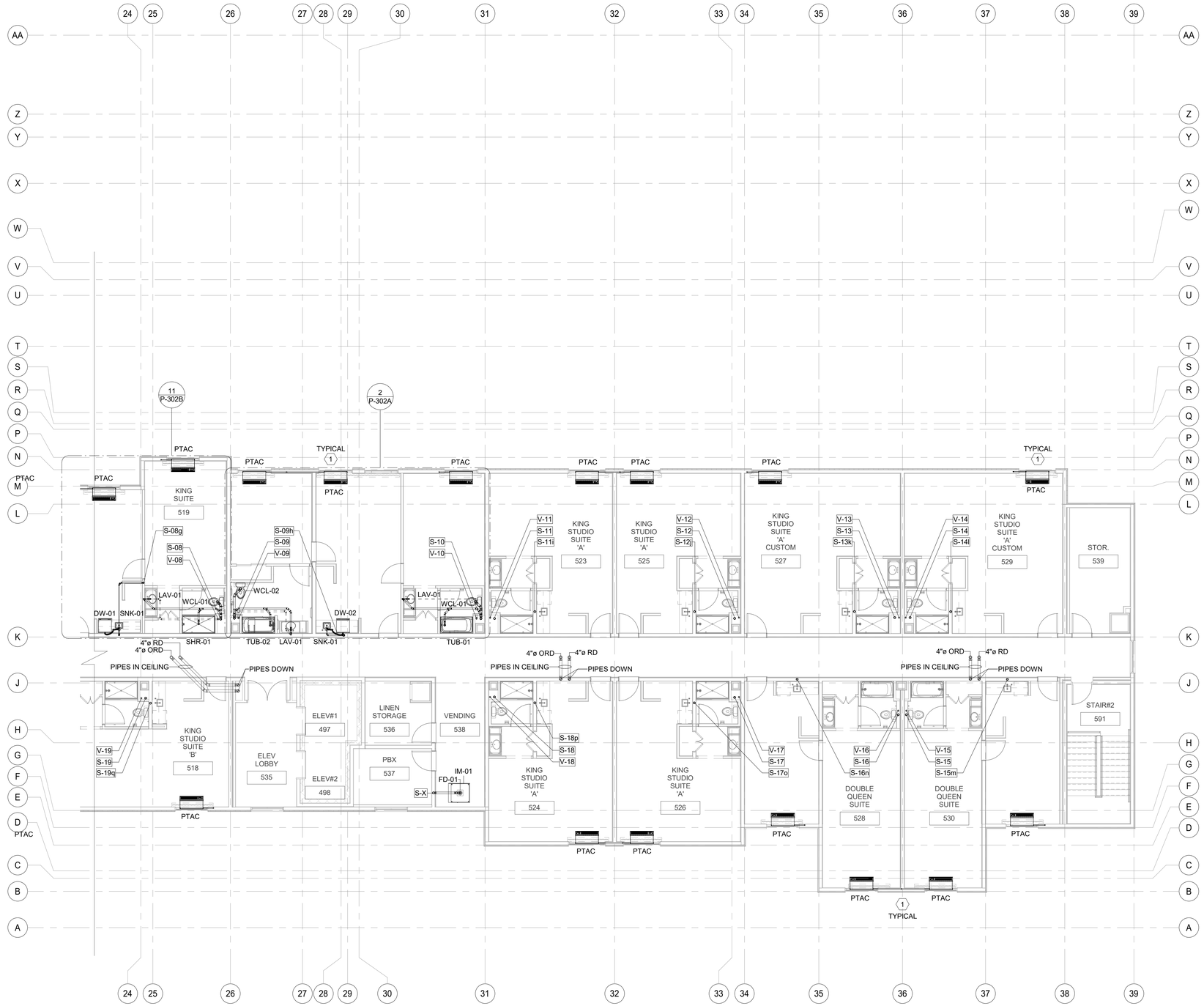

1 5TH FLOOR SANITARY & VENT PLAN PART-B
1/8" = 1'-0"

GENERAL NOTE
1. ALL SANITARY & WATER PIPES WHICH ARE TO BE ROUTED THROUGH THE TRUSSES/TJI'S. TRUSS/TJI MANUFACTURER TO COORDINATE WITH PLUMBING CONTRACTOR ON SITE FOR TRUSS/TJI TO BE SPACED ACCORDINGLY TO AVOID CLASH.

SANITARY & VENT KEYNOTE

#	TEXT
1	3/4" CONDENSATE RISER DOWN, SEE LOWER FLOOR PLANS FOR CONTINUATION. ROUTE EACH CONDENSATE VERTICAL RISER TO CONNECT TO NEAREST SANITARY LINE. GC TO COORDINATE CONNECTION & ENSURE SLOPE OF 1/8"FT FOR THE HORIZONTAL RUN OF PIPE. TYPICAL FOR ALL PTAC'S UNITS CONDENSATE DRAINAGE UNLESS NOTED OTHERWISE.

B-20-0180
City of Puyallup

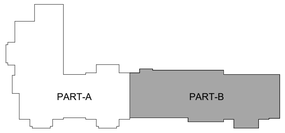

KEY PLAN FOR TYP. FLOOR-B
1" = 80'-0"

BASE4
2901 CLINT MOORE ROAD, #114
BOCA RATON, FLORIDA 33496
888.901.8008 www.base-4.com

RICARDO J. MUNIZ-GUILLET,AIA
5453 NW 106TH DR
CORAL SPRINGS, FL 33076

MEP ENGINEER
GARRY VERMAAS PhD, PE
2183 S BERRYS CHAPEL ROAD
FRANKLIN, TN 37069

Seal:

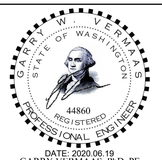

DATE: 2020.06.19
GARRY VERMAAS, PhD, PE
2183 S BERRYS CHAPEL ROAD
FRANKLIN TN 37069

Owner:

Dakota Legacy Group
-Hospitality Development-
4500 36TH AVE. S SUITE
200, FARGO, ND 58104
701.551.8000 (OFFICE)

HOMEWOOD SUITES BY HILTON

3500 S MERIDIAN, PUYALLUP, WA 98373

PROTOTYPE VERSION: V9.2 2014 FEB

ISSUE NO.	DELTA	ISSUE DATE	DESCRIPTION
1	P0	2020.02.21	ISSUED FOR PERMIT

CURRENT ISSUE

ISSUED FOR PERMIT

CURRENT ISSUE DATE
2020.02.21

DRAWN BY
NAT

CHECKED BY
GWV

PROJECT NO.
B4-124-1803

SHEET NAME

5TH FLOOR SANITARY & VENT PLAN-B

DRAWINGS NO.

P-210B

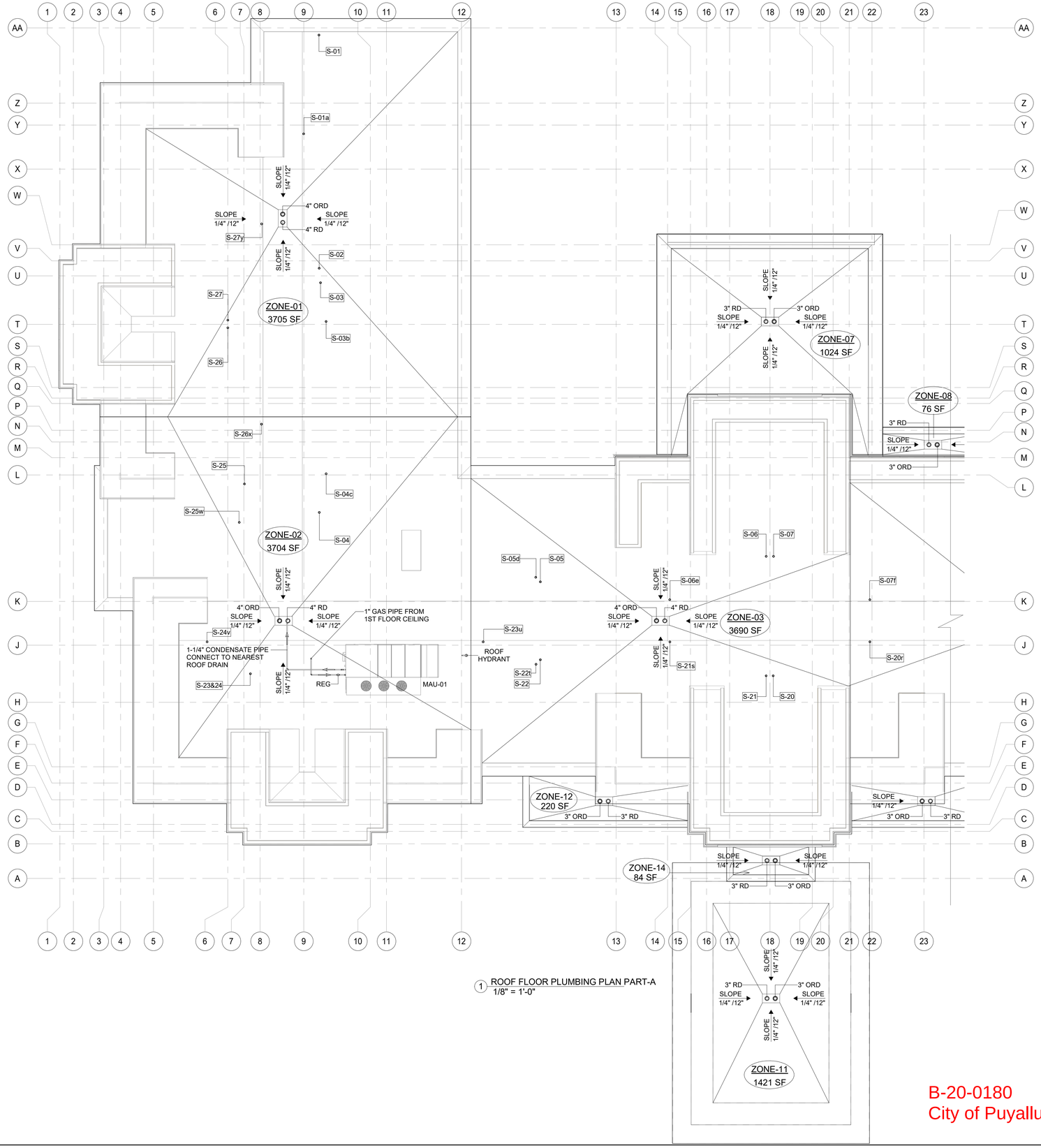

1 ROOF FLOOR PLUMBING PLAN PART-A
1/8" = 1'-0"

ROOF DRAIN SCHEDULE

LOCATION : PUYALLUP, WA
PRIMARY RAINFALL RATE : 2.0 IN / HR
SLOPE OF DRAIN PIPING : 1/8" PER FOOT

ZONE NO.	ROOF AREA (SQ.FT.)	WALL AREA (SQ.FT.)	TOTAL AREA (SQ.FT.)	PRIMARY DRAIN SIZE	SECONDARY ROOF DRAIN
01	3705	-	3705	4"	4"
02	3704	-	3704	4"	4"
03	3690	-	3690	4"	4"
04	3154	-	3154	4"	4"
05	3645	-	3645	4"	4"
06	3655	-	3655	4"	4"
07	1024	650	1674	3"	3"
08	76	380	456	3"	3"
09	1663	980	2643	4"	4"
10	1663	775	2438	4"	4"
11	1421	-	1421	3"	3"
12	220	580	800	3"	3"
13	220	580	800	3"	3"
14	85	300	385	3"	3"

ROOF DRAINAGE SYSTEMS WERE SIZED PER THE 2015 UNIFORM PLUMBING CODE. TABLE 1101.8

MAXIMUM ALLOWABLE SQ.FT. INCLUSIVE OF PARAPET HEIGHTS, USING THE ABOVE STATED PARAMETERS.LISTED AS FOLLOWS.

ROOF RAIN PIPE SIZE	PRIMARY ROOF (SQ.FT.)	SECONDARY ROOF AREA (SQ.FT.)
3"	1,644	1,644
4"	3,760	3,760
6"	10,700	10,700
8"	23,000	23,000

B-20-0180
City of Puyallup

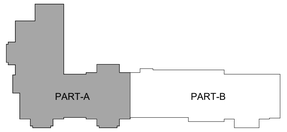

KEY PLAN FOR ROOF-A
1" = 80'-0"

BASE4
2901 CLINT MOORE ROAD, #114
BOCA RATON, FLORIDA 33496
888.901.8008 www.base-4.com

RICARDO J. MUNIZ-GUILLET,AIA
5453 NW 106TH DR
CORAL SPRINGS, FL 33076

MEP ENGINEER
GARRY VERMAAS PhD, PE
2183 S BERRYS CHAPEL ROAD
FRANKLIN, TN 37069

Seal:

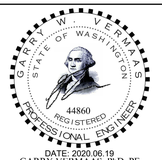

DATE: 2020.06.19
GARRY VERMAAS, PhD, PE
2183 S BERRYS CHAPEL ROAD
FRANKLIN TN 37069

Owner:

Dakota Legacy Group
-Hospitality Development-
4500 36TH AVE. S SUITE
200, FARGO, ND 58104
701.551.8000 (OFFICE)

HOMEWOOD SUITES BY HILTON

3500 S MERIDIAN, PUYALLUP, WA 98373

PROTOTYPE VERSION: V9.2 2014 FEB

ISSUE NO.	DELTA	ISSUE DATE	DESCRIPTION
1	P0	2020.02.21	ISSUED FOR PERMIT

CURRENT ISSUE

ISSUED FOR PERMIT

CURRENT ISSUE DATE
2020.02.21

DRAWN BY
NAT

CHECKED BY
GWV

PROJECT NO.
B4-124-1803

SHEET NAME

ROOF PLUMBING PLAN-A

DRAWINGS NO.

P-211A

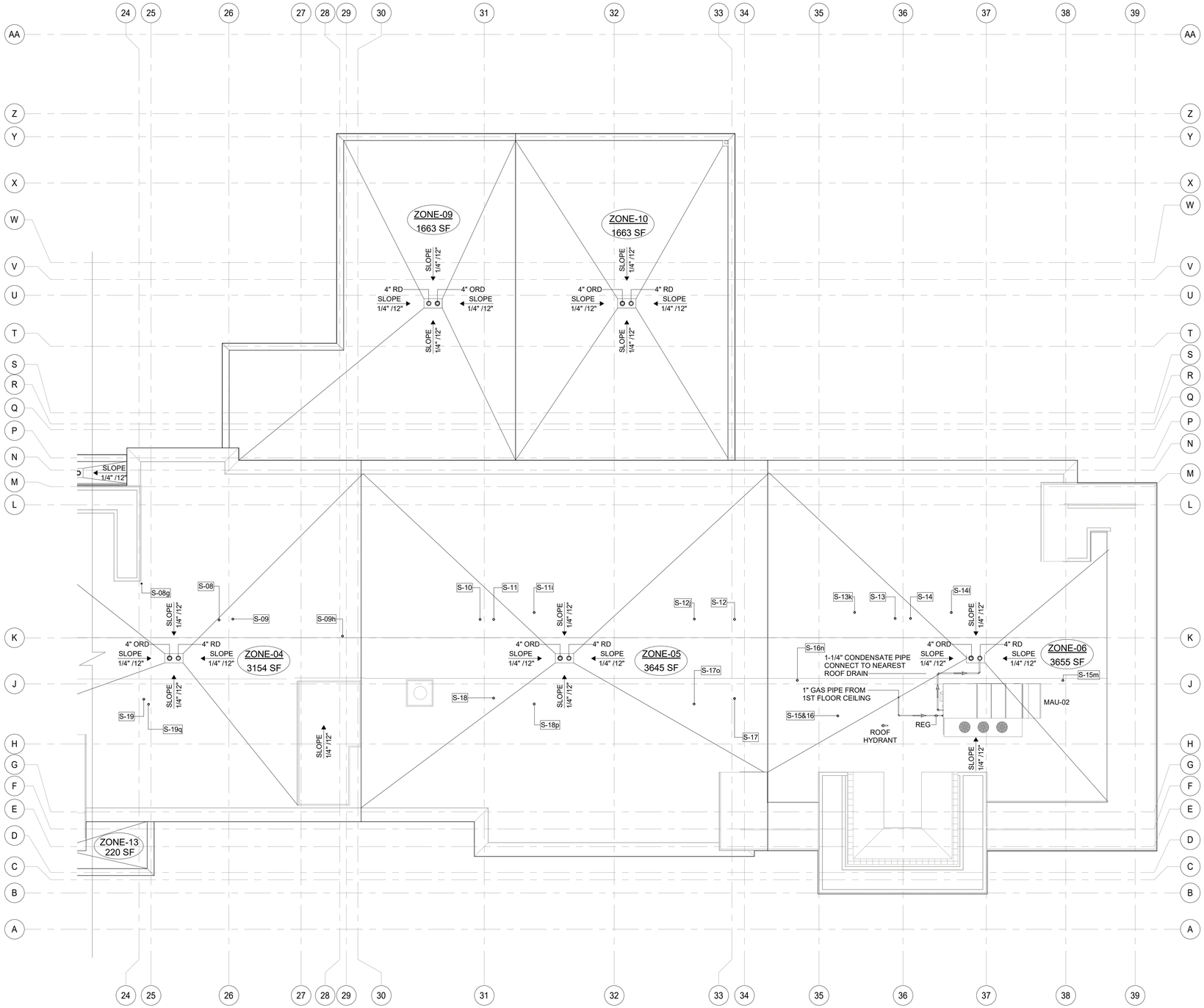

1 ROOF FLOOR PLUMBING PLAN PART-B
1/8" = 1'-0"

ROOF DRAIN SCHEDULE

LOCATION : PUYALLUP, WA
PRIMARY RAINFALL RATE : 2.0 IN / HR
SLOPE OF DRAIN PIPING : 1/8" PER FOOT

ZONE NO.	ROOF AREA (SQ.FT.)	WALL AREA (SQ.FT.)	TOTAL AREA (SQ.FT.)	PRIMARY DRAIN SIZE	SECONDARY ROOF DRAIN
01	3705	-	3705	4"	4"
02	3704	-	3704	4"	4"
03	3690	-	3690	4"	4"
04	3154	-	3154	4"	4"
05	3645	-	3645	4"	4"
06	3655	-	3655	4"	4"
07	1024	650	1674	3"	3"
08	76	380	456	3"	3"
09	1663	980	2643	4"	4"
10	1663	775	2438	4"	4"
11	1421	-	1421	3"	3"
12	220	580	800	3"	3"
13	220	580	800	3"	3"
14	85	300	385	3"	3"

ROOF DRAINAGE SYSTEMS WERE SIZED PER THE 2015 UNIFORM PLUMBING CODE. TABLE 1101.8

MAXIMUM ALLOWABLE SQ.FT. INCLUSIVE OF PARAPET HEIGHTS, USING THE ABOVE STATED PARAMETERS.LISTED AS FOLLOWS.

ROOF RAIN PIPE SIZE	PRIMARY ROOF (SQ.FT.)	SECONDARY ROOF AREA (SQ.FT.)
3"	1,644	1,644
4"	3,760	3,760
6"	10,700	10,700
8"	23,000	23,000

B-20-0180
City of Puyallup

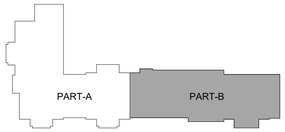

KEY PLAN FOR TYP. FLOOR-B
1" = 80'-0"

BASE4
2901 CLINT MOORE ROAD, #114
BOCA RATON, FLORIDA 33496
888.901.8008 www.base-4.com

RICARDO J. MUNIZ-GUILLET,AIA
5453 NW 106TH DR
CORAL SPRINGS, FL 33076

MEP ENGINEER
GARRY VERMAAS PhD, PE
2183 S BERRYS CHAPEL ROAD
FRANKLIN, TN 37069

Seal:

DATE: 2020.06.19
GARRY VERMAAS, PhD, PE
2183 S BERRYS CHAPEL ROAD
FRANKLIN TN 37069

Owner:

Dakota Legacy Group
-Hospitality Development-
4500 36TH AVE. S SUITE
200, FARGO, ND 58104
701.551.8000 (OFFICE)

HOMEWOOD SUITES BY HILTON

3500 S MERIDIAN, PUYALLUP, WA 98373

PROTOTYPE VERSION: V9.2 2014 FEB

ISSUE NO.	DELTA	ISSUE DATE	DESCRIPTION
1	P0	2020.02.21	ISSUED FOR PERMIT

CURRENT ISSUE

ISSUED FOR PERMIT

CURRENT ISSUE DATE
2020.02.21

DRAWN BY
NAT

CHECKED BY
GWV

PROJECT NO.
B4-124-1803

SHEET NAME

ROOF PLUMBING PLAN-B

DRAWINGS NO.

P-211B

WATER SUPPLY DEMAND		
FIXTURE	CWFU	HWFU
BATHROOM GROUP	3.5	1.8
SNK AND DW	1.5	1.5

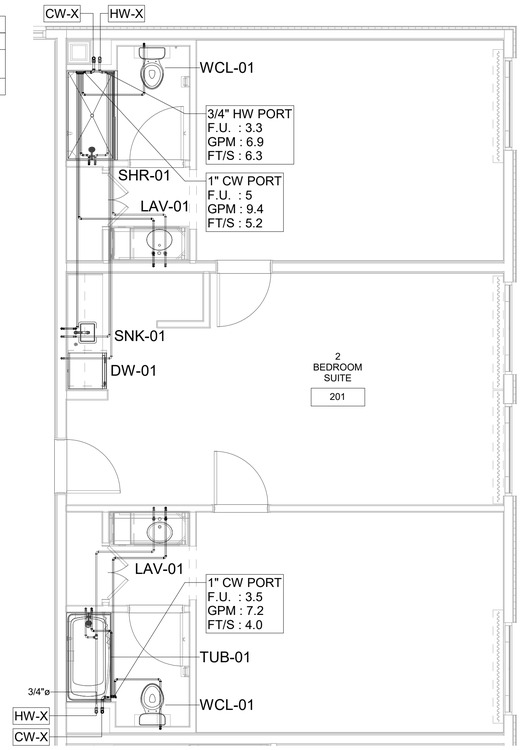

1 2 BEDROOM SUITE WATER SUPPLY PLAN
1/4" = 1'-0"

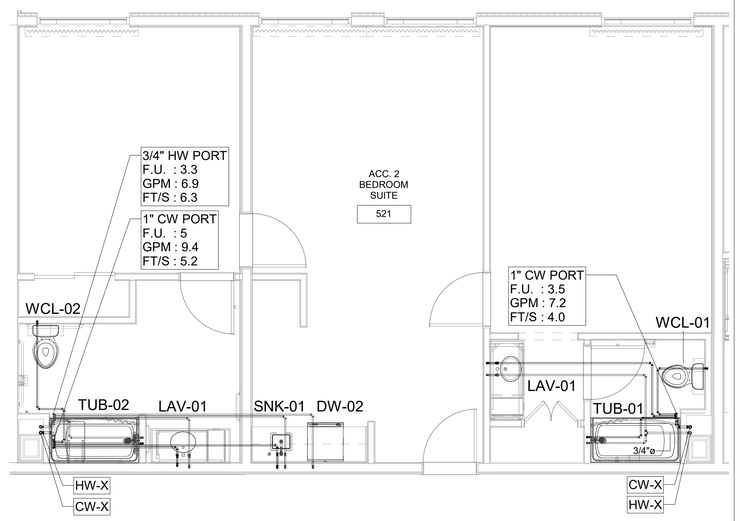

2 ACCESSIBLE 2 BEDROOM SUITE WATER SUPPLY PLAN
1/4" = 1'-0"

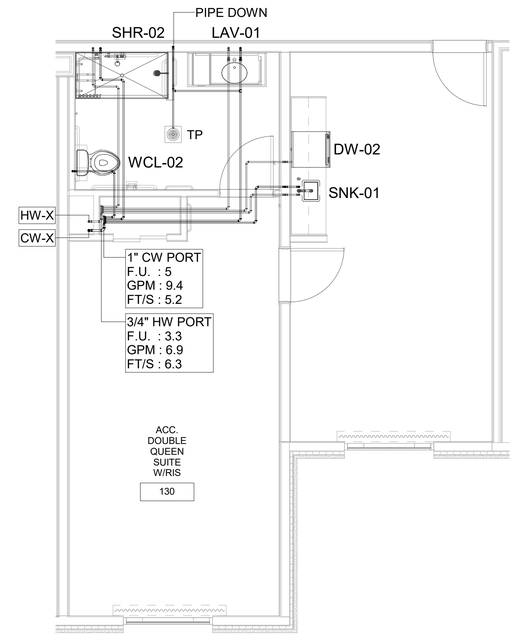

3 ACCESSIBLE DOUBLE QUEEN SUITE W/RIS WATER SUPPLY PLAN
1/4" = 1'-0"

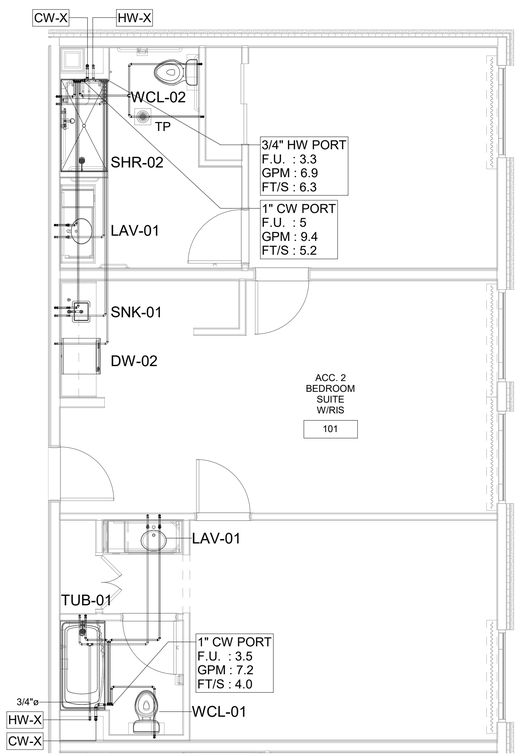

4 ACCESSIBLE 2 BEDROOM SUITE W/RIS WATER SUPPLY PLAN
1/4" = 1'-0"

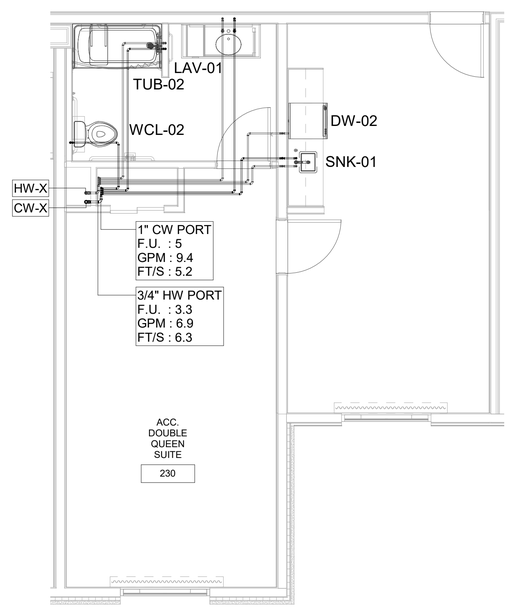

5 ACCESSIBLE DOUBLE QUEEN SUITE WATER SUPPLY PLAN
1/4" = 1'-0"

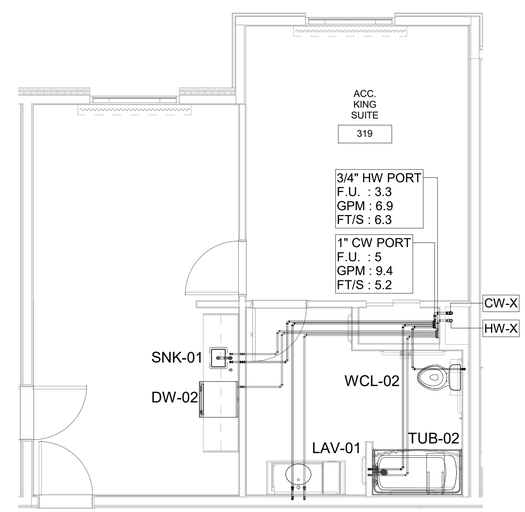

6 ACCESSIBLE KING SUITE WATER SUPPLY PLAN
1/4" = 1'-0"

B-20-0180
City of Puyallup

BASE4
2901 CLINT MOORE ROAD, #114
BOCA RATON, FLORIDA 33496
888.901.8008 www.base-4.com

RICARDO J. MUNIZ-GUILLET,AIA
5453 NW 106TH DR
CORAL SPRINGS, FL 33076

MEP ENGINEER
GARRY VERMAAS PhD, PE
2183 S BERRYS CHAPEL ROAD
FRANKLIN, TN 37069

Seal:

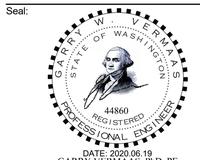

DATE: 2020.06.19
GARRY VERMAAS, PhD, PE
2183 S BERRYS CHAPEL ROAD
FRANKLIN TN 37069

Owner:

Dakota Legacy Group
-Hospitality Development-
4500 36TH AVE. S SUITE
200, FARGO, ND 58104
701.551.8000 (OFFICE)

HOMEWOOD SUITES BY HILTON

3500 S MERIDIAN, PUYALLUP, WA 98373

PROTOTYPE VERSION: V9.2 2014 FEB

ISSUE NO.	DELTA	ISSUE DATE	DESCRIPTION
1	P0	2020.02.21	ISSUED FOR PERMIT

CURRENT ISSUE

ISSUED FOR PERMIT

CURRENT ISSUE DATE
2020.02.21

DRAWN BY
NAT

CHECKED BY
GWV

PROJECT NO.
B4-124-1803

SHEET NAME

UNIT WATER SUPPLY PLAN-A

DRAWINGS NO.

P-301A

WATER SUPPLY DEMAND		
FIXTURE	CWFU	HWFU
BATHROOM GROUP	3.5	1.8
SNK AND DW	1.5	1.5

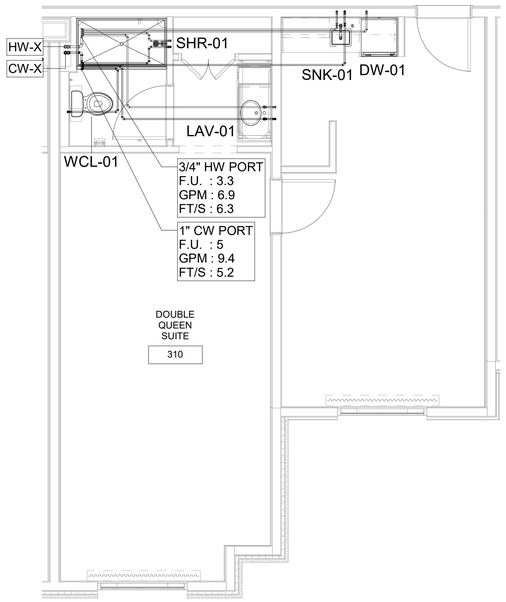

7 DOUBLE QUEEN SUITE WATER SUPPLY PLAN
1/4" = 1'-0"

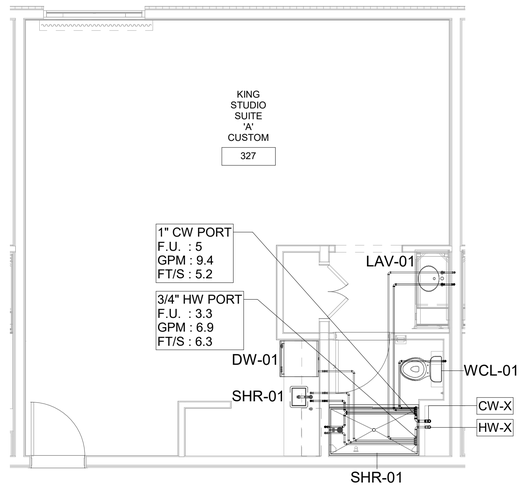

8 KING STUDIO 'A' CUSTOM WATER SUPPLY PLAN
1/4" = 1'-0"

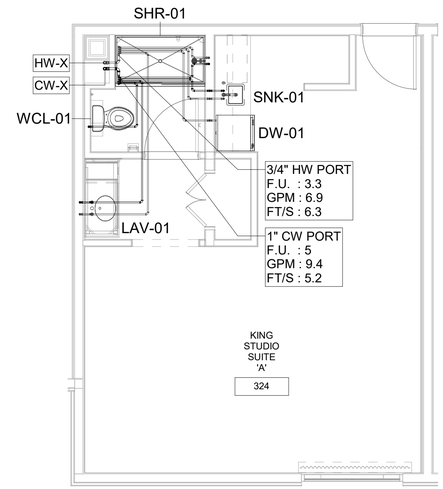

9 KING STUDIO 'A' WATER SUPPLY PLAN
1/4" = 1'-0"

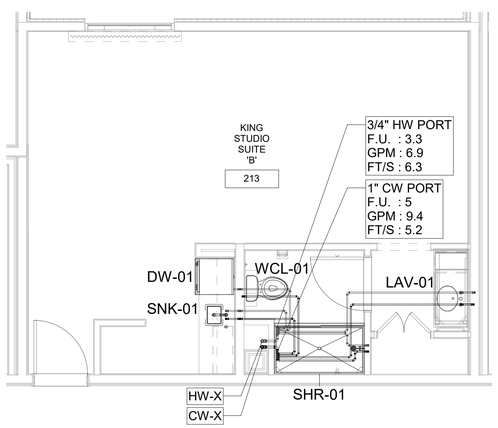

10 KING STUDIO 'B' WATER SUPPLY PLAN
1/4" = 1'-0"

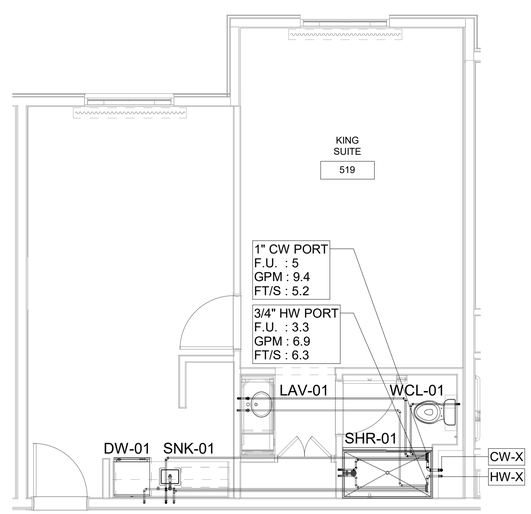

11 KING SUITE WATER SUPPLY PLAN
1/4" = 1'-0"

NOT IN USE

B-20-0180
City of Puyallup

BASE4
2901 CLINT MOORE ROAD, #114
BOCA RATON, FLORIDA 33496
888.901.8008 www.base-4.com

RICARDO J. MUNIZ-GUILLET,AIA
5453 NW 106TH DR
CORAL SPRINGS, FL 33076

MEP ENGINEER
GARRY VERMAAS PhD, PE
2183 S BERRYS CHAPEL ROAD
FRANKLIN, TN 37069

Seal:

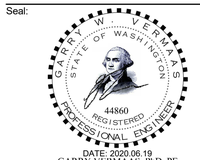

DATE: 2020.06.19
GARRY VERMAAS, PhD, PE
2183 S BERRYS CHAPEL ROAD
FRANKLIN TN 37069

Owner:

Dakota Legacy Group
-Hospitality Development-
4500 36TH AVE. S SUITE
200, FARGO, ND 58104
701.551.8000 (OFFICE)

HOMEWOOD SUITES BY HILTON

3500 S MERIDIAN, PUYALLUP, WA 98373

PROTOTYPE VERSION: V9.2 2014 FEB

ISSUE NO.	DELTA	ISSUE DATE	DESCRIPTION
1	P0	2020.02.21	ISSUED FOR PERMIT

CURRENT ISSUE
ISSUED FOR PERMIT

CURRENT ISSUE DATE
2020.02.21

DRAWN BY
NAT

CHECKED BY
GWV

PROJECT NO.
B4-124-1803

SHEET NAME
UNIT WATER SUPPLY PLAN-B

DRAWINGS NO.
P-301B

SEWER LOAD DEMAND	
FIXTURE	DFU
BATHROOM GROUP	5.0
SNK / DW	2.0

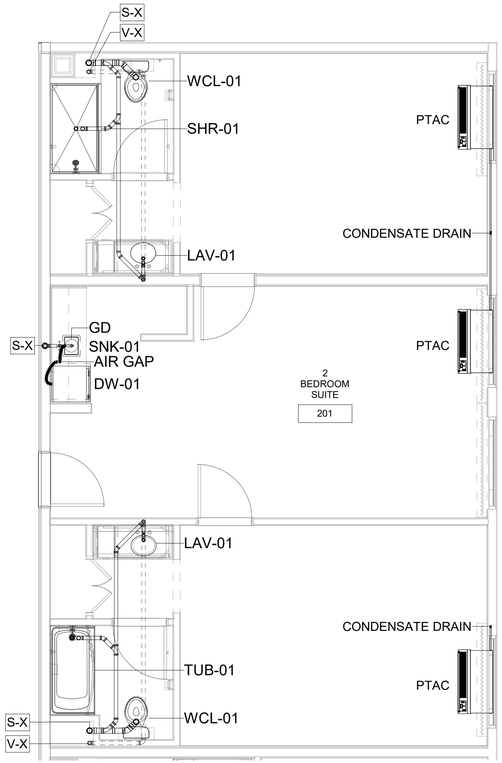

1 2 BEDROOM SUITE SANITARY AND VENT PLAN
1/4" = 1'-0"

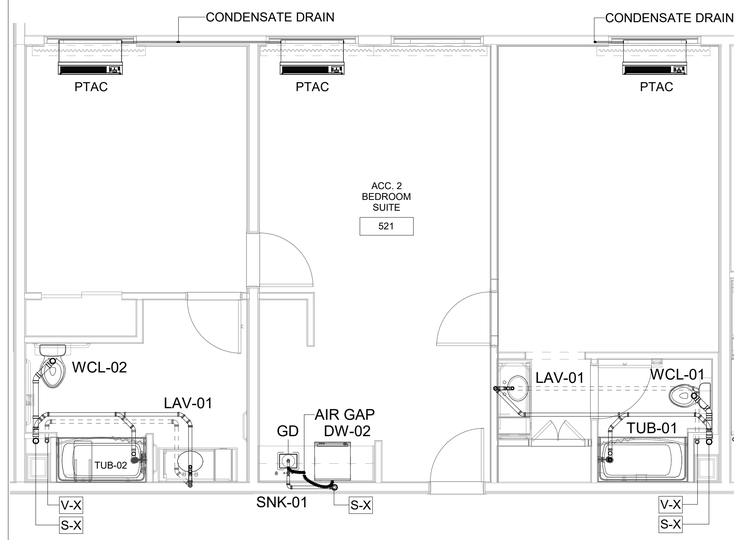

2 ACCESSIBLE 2 BEDROOM SUITE SANITARY AND VENT PLAN
1/4" = 1'-0"

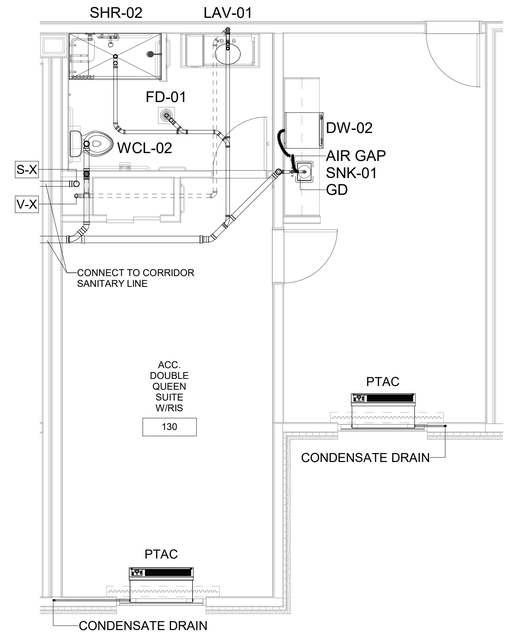

3 ACCESSIBLE DOUBLE QUEEN SUITE W/RIS SANITARY AND VENT PLAN
1/4" = 1'-0"

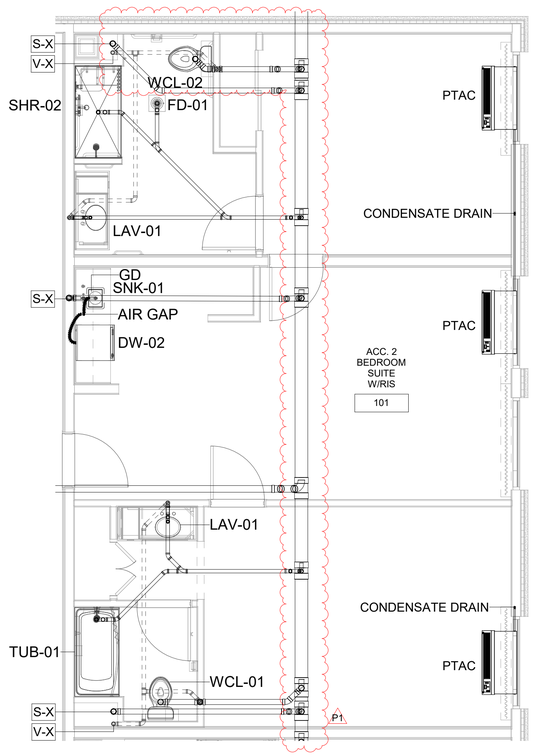

4 ACCESSIBLE 2 BEDROOM SUITE W/RIS SANITARY AND VENT PLAN
1/4" = 1'-0"

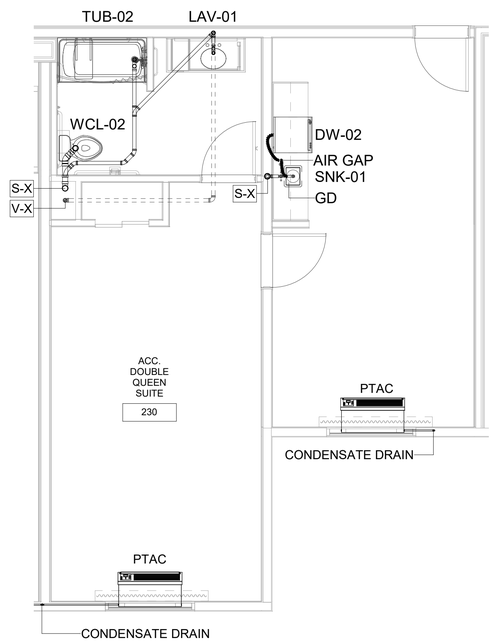

5 ACCESSIBLE DOUBLE QUEEN SUITE SANITARY AND VENT PLAN
1/4" = 1'-0"

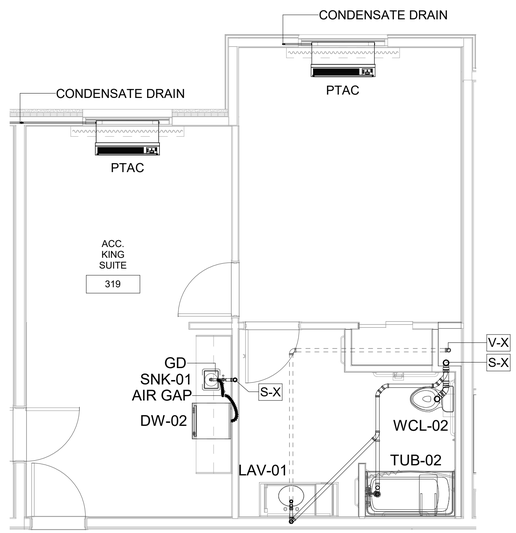

6 ACCESSIBLE KING SUITE SANITARY AND VENT PLAN
1/4" = 1'-0"

B-20-0180
City of Puyallup

BASE4

BASE4
2901 CLINT MOORE ROAD, #114
BOCA RATON, FLORIDA 33496
888.901.8008 www.base-4.com

RICARDO J. MUNIZ-GUILLET,AIA
5453 NW 106TH DR
CORAL SPRINGS, FL 33076

MEP ENGINEER
GARRY VERMAAS PhD, PE
2183 S BERRYS CHAPEL ROAD
FRANKLIN, TN 37069

Seal:

DATE: 2020.06.19
GARRY VERMAAS, PhD, PE
2183 S BERRYS CHAPEL ROAD
FRANKLIN TN 37069

Owner:

Dakota Legacy Group
-Hospitality Development-
4500 36TH AVE. S SUITE
200, FARGO, ND 58104
701.551.8000 (OFFICE)

HOMEWOOD SUITES BY HILTON

3500 S MERIDIAN, PUYALLUP, WA 98373

PROTOTYPE VERSION: V9.2 2014 FEB

ISSUE NO.	DELTA	ISSUE DATE	DESCRIPTION
2	P1	2020.06.03	ADDENDUM #1
1	P0	2020.02.21	ISSUED FOR PERMIT

CURRENT ISSUE

ISSUED FOR PERMIT

CURRENT ISSUE DATE
2020.02.21

DRAWN BY
NAT

CHECKED BY
GWV

PROJECT NO.
B4-124-1803

SHEET NAME

UNIT SANITARY & VENT PLAN-A

DRAWINGS NO.

P-302A

SEWER LOAD DEMAND	
FIXTURE	DFU
BATHROOM GROUP	5.0
SNK / DW	2.0

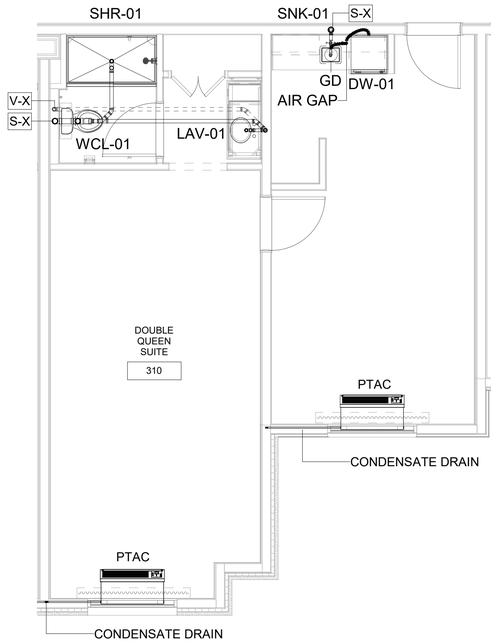

7 DOUBLE QUEEN SUITE SANITARY AND VENT PLAN
1/4" = 1'-0"

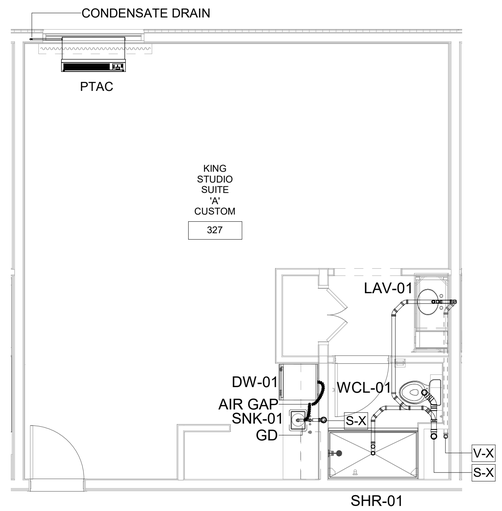

8 KING STUDIO 'A' CUSTOM SANITARY AND VENT PLAN
1/4" = 1'-0"

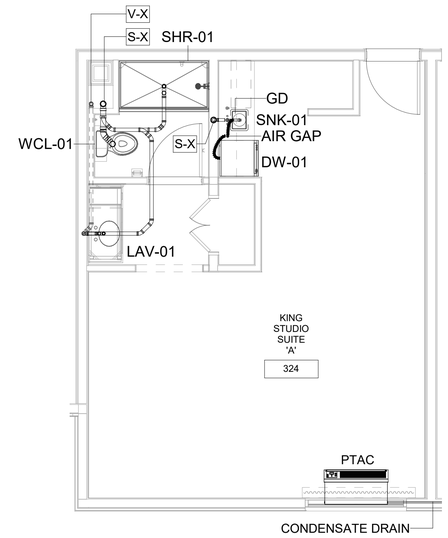

9 KING STUDIO 'A' SANITARY AND VENT PLAN
1/4" = 1'-0"

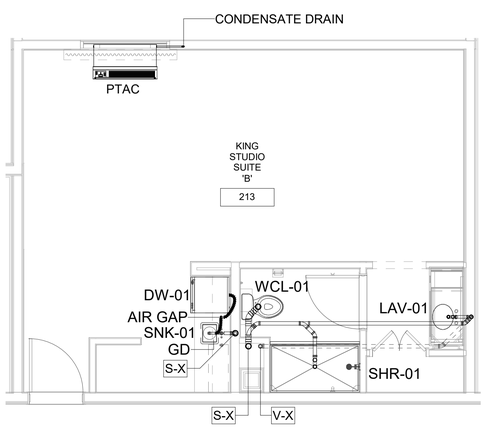

10 KING STUDIO 'B' SANITARY AND VENT PLAN
1/4" = 1'-0"

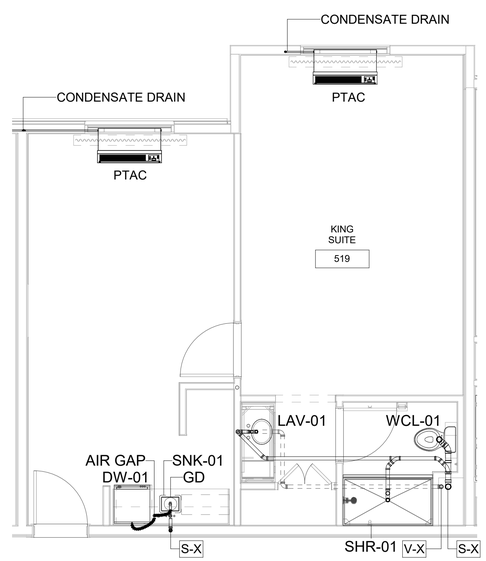

11 KING SUITE SANITARY AND VENT PLAN
1/4" = 1'-0"

NOT IN USE

B-20-0180
City of Puyallup

BASE4

BASE4
2901 CLINT MOORE ROAD, #114
BOCA RATON, FLORIDA 33496
888.901.8008 www.base-4.com

RICARDO J. MUNIZ-GUILLET,AIA
5453 NW 106TH DR
CORAL SPRINGS, FL 33076

MEP ENGINEER
GARRY VERMAAS PhD, PE
2183 S BERRYS CHAPEL ROAD
FRANKLIN, TN 37069

Seal:

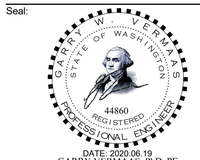

DATE: 2020.06.19
GARRY VERMAAS, PhD, PE
2183 S BERRYS CHAPEL ROAD
FRANKLIN TN 37069

Owner:

Dakota Legacy Group
-Hospitality Development-
4500 36TH AVE. S SUITE
200, FARGO, ND 58104
701.551.8000 (OFFICE)

HOMEWOOD SUITES BY HILTON

3500 S MERIDIAN, PUYALLUP, WA 98373

PROTOTYPE VERSION: V9.2 2014 FEB

ISSUE NO.	DELTA	ISSUE DATE	DESCRIPTION
1	P0	2020.02.21	ISSUED FOR PERMIT

CURRENT ISSUE

ISSUED FOR PERMIT

CURRENT ISSUE DATE
2020.02.21

DRAWN BY
NAT

CHECKED BY
GWV

PROJECT NO.
B4-124-1803

SHEET NAME

UNIT SANITARY & VENT PLAN-B

DRAWINGS NO.

P-302B

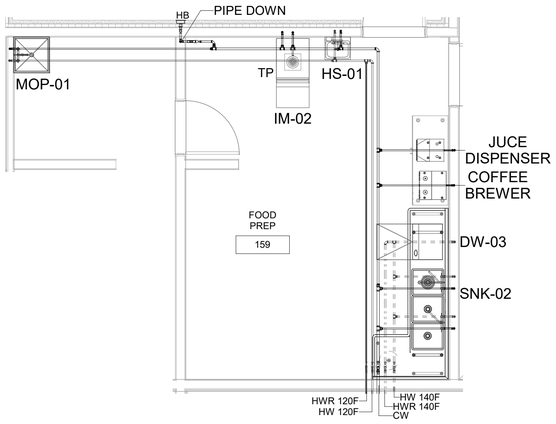

12 FOOD PREP AREA WATER SUPPLY PLAN
1/4" = 1'-0"

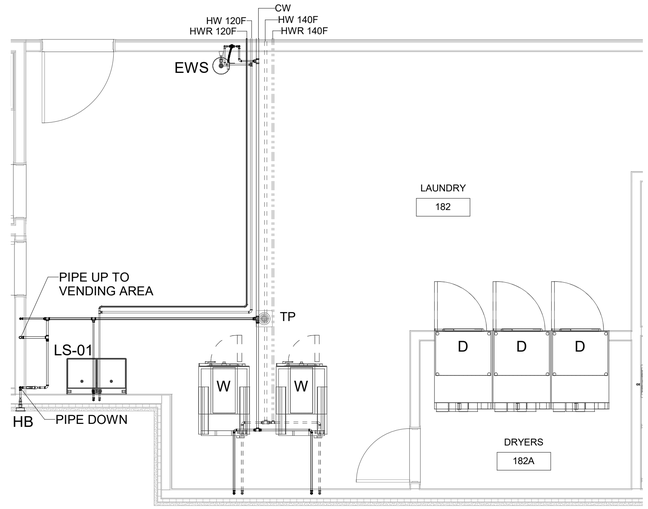

13 LAUNDRY AREA WATER SUPPLY PLAN
1/4" = 1'-0"

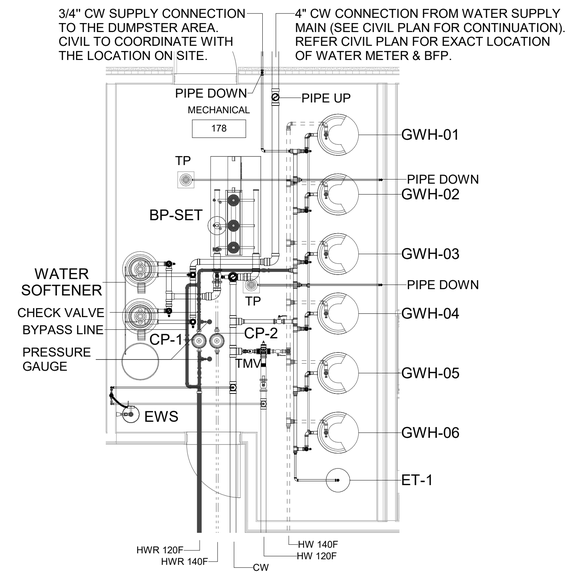

14 MECHANICAL ROOM WATER SUPPLY PLAN
1/4" = 1'-0"

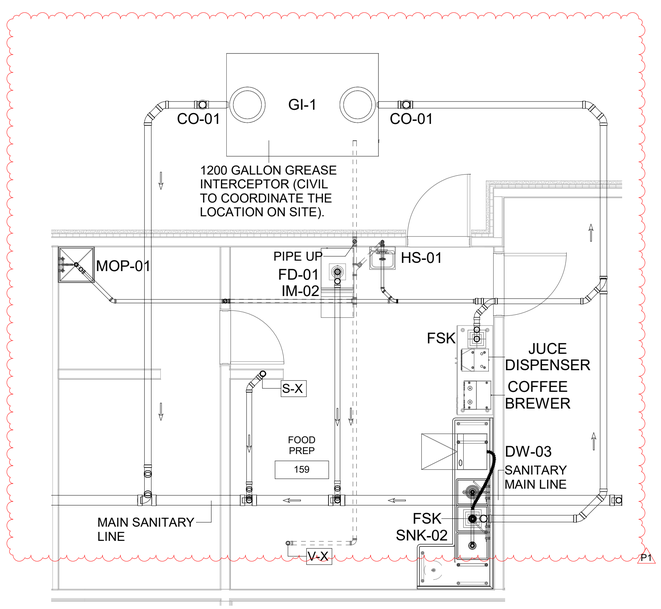

12 FOOD PREP AREA SANITARY & VENT PLAN
1/4" = 1'-0"

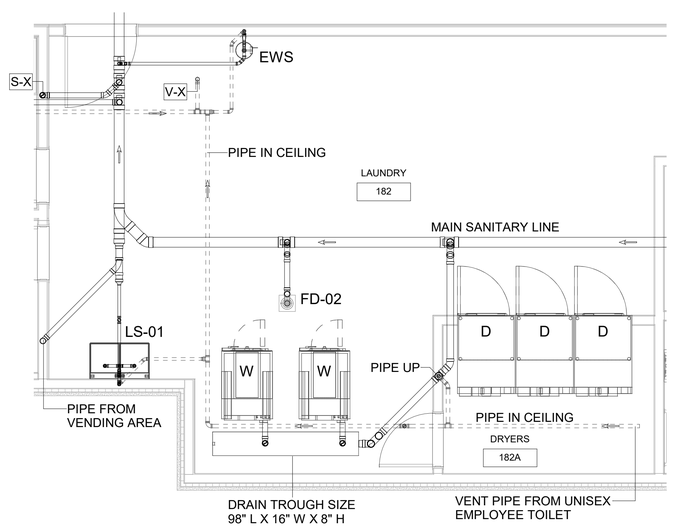

13 LAUNDRY AREA SANITARY & VENT PLAN
1/4" = 1'-0"

NOT IN USE

B-20-0180
City of Puyallup

BASE4

BASE4
2901 CLINT MOORE ROAD, #114
BOCA RATON, FLORIDA 33496
888.901.8008 www.base-4.com

RICARDO J. MUNIZ-GUILLET,AIA
5453 NW 106TH DR
CORAL SPRINGS, FL 33076

MEP ENGINEER
GARRY VERMAAS PhD, PE
2183 S BERRYS CHAPEL ROAD
FRANKLIN, TN 37069

Seal:

GARRY W. VERMAAS
STATE OF WASHINGTON
44860
REGISTERED
PROFESSIONAL ENGINEER

DATE: 2020.06.19
GARRY VERMAAS, PhD, PE
2183 S BERRYS CHAPEL ROAD
FRANKLIN TN 37069

Owner:

Dakota Legacy Group
-Hospitality Development-
4500 36TH AVE. S SUITE
200, FARGO, ND 58104
701.551.8000 (OFFICE)

HOMEWOOD SUITES BY HILTON

3500 S MERIDIAN, PUYALLUP, WA 98373

PROTOTYPE VERSION: V9.2 2014 FEB

ISSUE NO.	DELTA	ISSUE DATE	DESCRIPTION
2	P1	2020.06.03	ADDENDUM #1
1	P0	2020.02.21	ISSUED FOR PERMIT

CURRENT ISSUE

ISSUED FOR PERMIT

CURRENT ISSUE DATE
2020.02.21

DRAWN BY
NAT

CHECKED BY
GWV

PROJECT NO.
B4-124-1803

SHEET NAME

UNIT WATER SUPPLY & SANITARY PLAN

DRAWINGS NO.

P-303

WATER SUPPLY DEMAND		
FIXTURE	CWFU	HWFU
BATHROOM GROUP	3.5	1.8
SNK AND DW	1.5	1.5

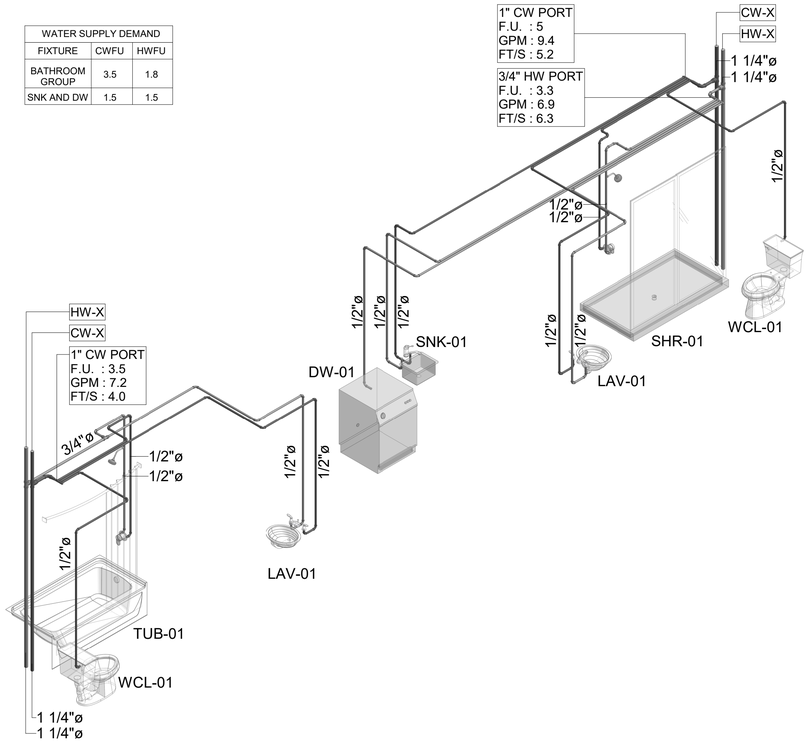

1 2 BEDROOM SUITE WATER SUPPLY RISER DIAGRAM

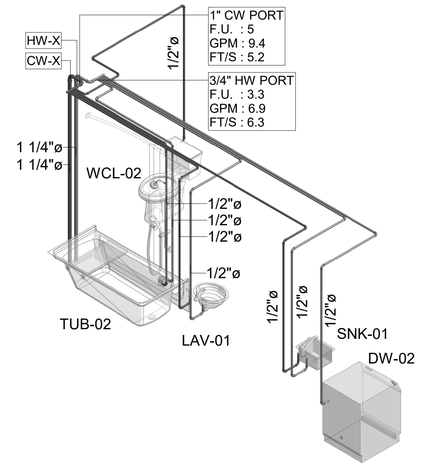

2 ACCESSIBLE 2 BEDROOM SUITE WATER SUPPLY RISER DIAGRAM

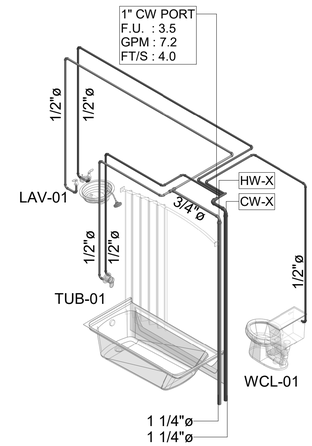

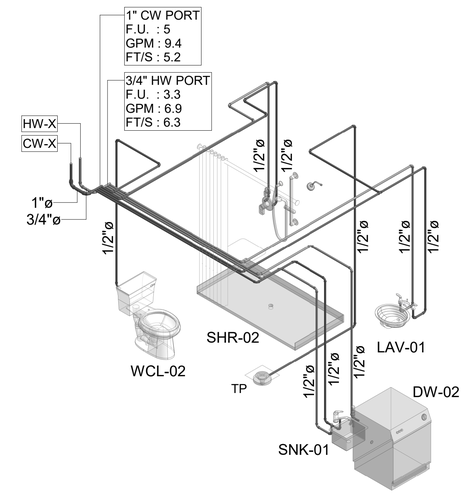

3 ACCESSIBLE DOUBLE QUEEN SUITE W/RIS WATER SUPPLY RISER DIAGRAM

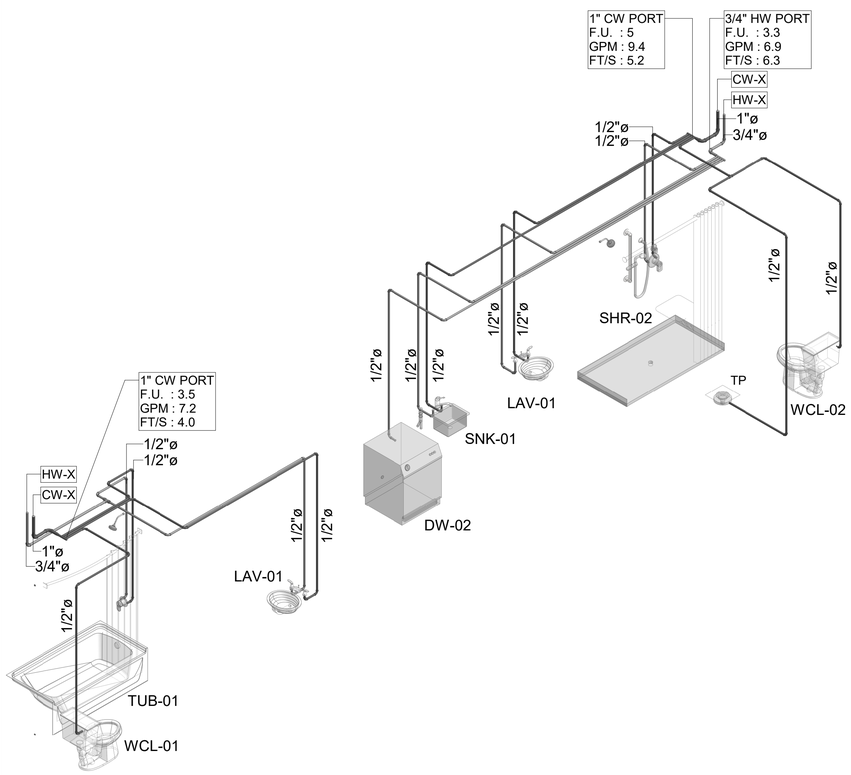

4 ACCESSIBLE 2 BEDROOM SUITE W/RIS WATER RISER DIAGRAM

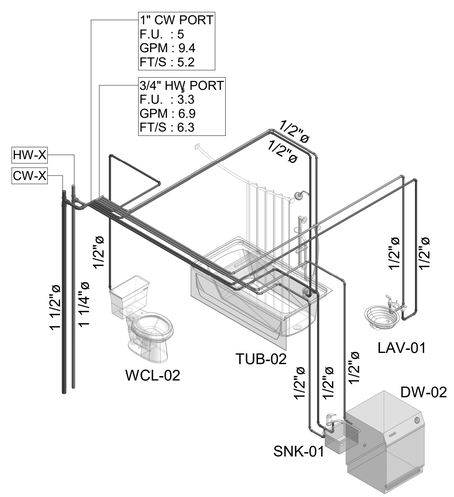

5 ACCESSIBLE DOUBLE QUEEN SUITE WATER SUPPLY RISER DIAGRAM

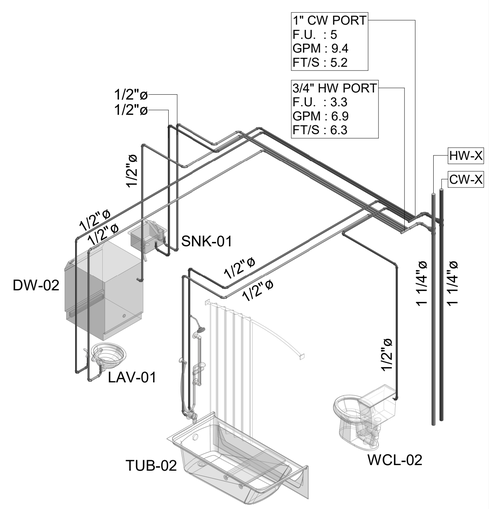

B-20-0180
City of Puyallup

6 ACCESSIBLE KING SUITE WATER SUPPLY RISER DIAGRAM

BASE4

BASE4
2901 CLINT MOORE ROAD, #114
BOCA RATON, FLORIDA 33496
888.901.8008 www.base-4.com

RICARDO J. MUNIZ-GUILLET,AIA
5453 NW 106TH DR
CORAL SPRINGS, FL 33076

MEP ENGINEER
GARRY VERMAAS PhD, PE
2183 S BERRYS CHAPEL ROAD
FRANKLIN, TN 37069

Seal:

GARRY W. VERMAAS
STATE OF WASHINGTON
44860
REGISTERED
PROFESSIONAL ENGINEER

DATE: 2020.06.19
GARRY VERMAAS, PhD, PE
2183 S BERRYS CHAPEL ROAD
FRANKLIN TN 37069

Owner:

Dakota Legacy Group
-Hospitality Development-
4500 36TH AVE. S SUITE
200, FARGO, ND 58104
701.551.8000 (OFFICE)

HOMEWOOD SUITES BY HILTON

3500 S MERIDIAN, PUYALLUP, WA 98373

PROTOTYPE VERSION: V9.2 2014 FEB

ISSUE NO.	DELTA	ISSUE DATE	DESCRIPTION
1	P0	2020.02.21	ISSUED FOR PERMIT

CURRENT ISSUE

ISSUED FOR PERMIT

CURRENT ISSUE DATE
2020.02.21

DRAWN BY
NAT

CHECKED BY
GWV

PROJECT NO.
B4-124-1803

SHEET NAME

UNIT WATER SUPPLY RISER DIAGRAM-A

DRAWINGS NO.

P-304A

WATER SUPPLY DEMAND		
FIXTURE	CWFU	HWFU
BATHROOM GROUP	3.5	1.8
SNK AND DW	1.5	1.5

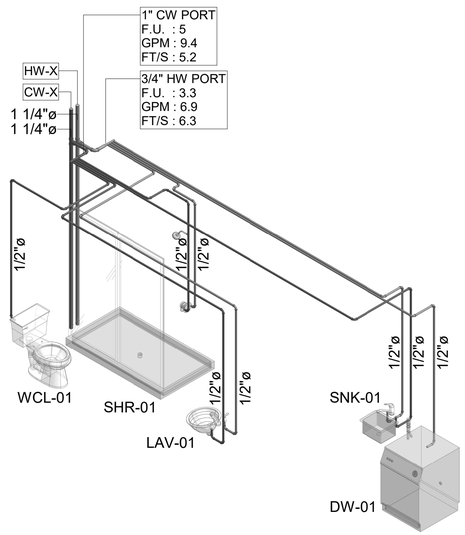

7 DOUBLE QUEEN SUITE WATER SUPPLY RISER DIAGRAM

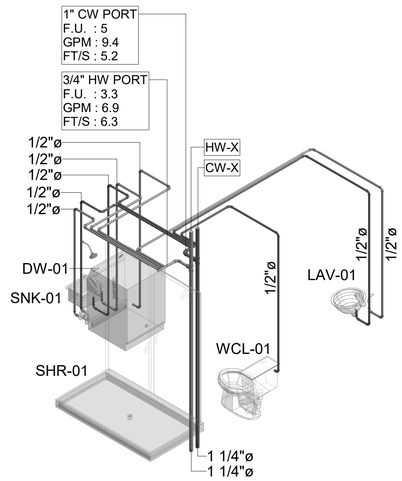

8 KING STUDIO 'A' CUSTOM WATER SUPPLY RISER DIAGRAM

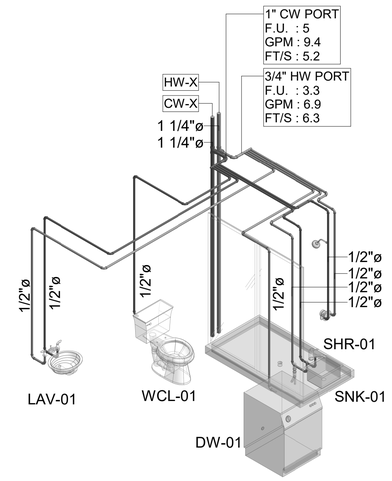

9 KING STUDIO 'A' WATER SUPPLY RISER DIAGRAM

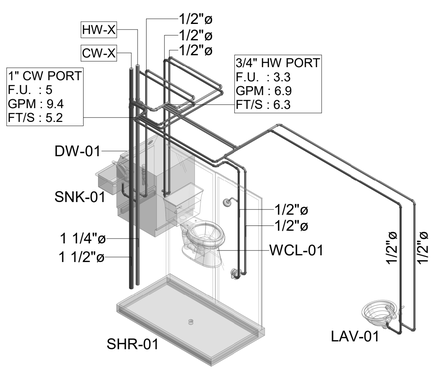

10 KING STUDIO 'B' WATER SUPPLY RISER DIAGRAM

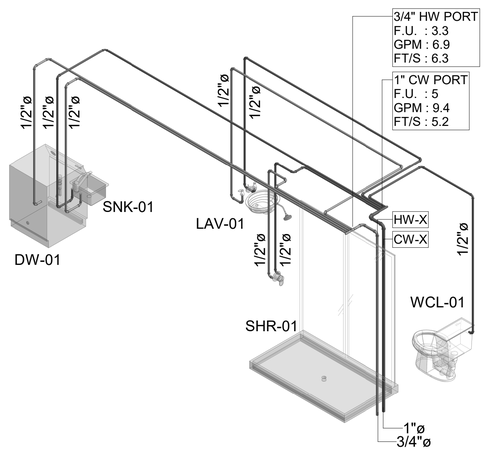

11 KING SUITE WATER SUPPLY RISER DIAGRAM

NOT IN USE

B-20-0180
City of Puyallup

BASE4

BASE4
2901 CLINT MOORE ROAD, #114
BOCA RATON, FLORIDA 33496
888.901.8008 www.base-4.com

RICARDO J. MUNIZ-GUILLET,AIA
5453 NW 106TH DR
CORAL SPRINGS, FL 33076

MEP ENGINEER
GARRY VERMAAS PhD, PE
2183 S BERRYS CHAPEL ROAD
FRANKLIN, TN 37069

Seal:

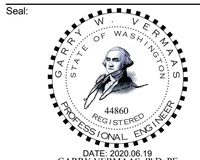

DATE: 2020.06.19
GARRY VERMAAS, PhD, PE
2183 S BERRYS CHAPEL ROAD
FRANKLIN TN 37069

Owner:

Dakota Legacy Group
-Hospitality Development-
4500 36TH AVE. S SUITE
200, FARGO, ND 58104
701.551.8000 (OFFICE)

HOMEWOOD SUITES BY HILTON

3500 S MERIDIAN, PUYALLUP, WA 98373

PROTOTYPE VERSION: V9.2 2014 FEB

ISSUE NO.	DELTA	ISSUE DATE	DESCRIPTION
1	P0	2020.02.21	ISSUED FOR PERMIT

CURRENT ISSUE

ISSUED FOR PERMIT

CURRENT ISSUE DATE
2020.02.21

DRAWN BY
NAT

CHECKED BY
GWV

PROJECT NO.
B4-124-1803

SHEET NAME

UNIT WATER SUPPLY RISER DIAGRAM-B

DRAWINGS NO.

P-304B

SEWER LOAD DEMAND	
FIXTURE	DFU
BATHROOM GROUP	5.0
SNK / DW	2.0

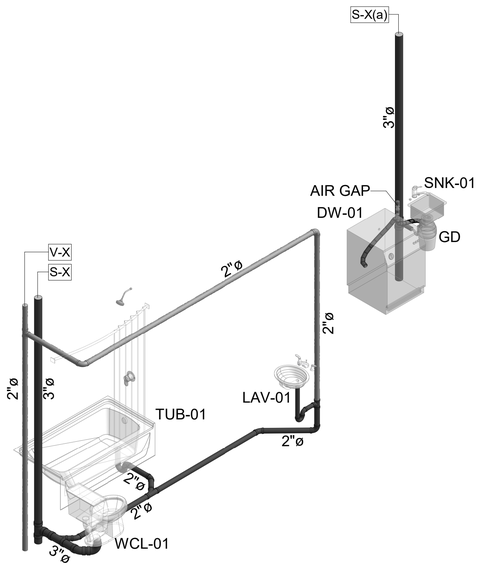

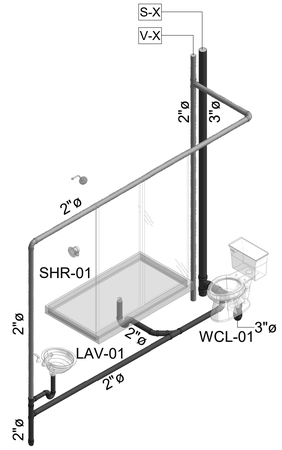

1 2 BEDROOM SUITE SANITARY AND VENT RISER DIAGRAM

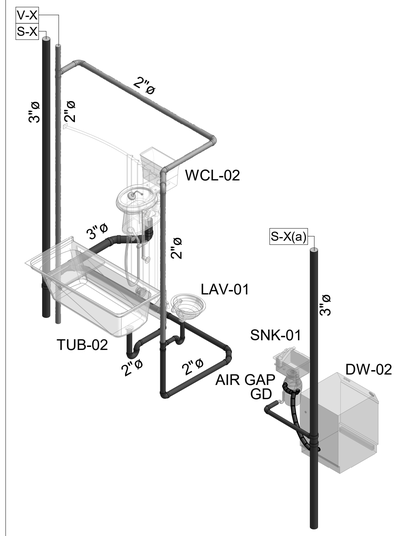

2 ACCESSIBLE 2 BEDROOM SUITE SANITARY AND VENT RISER DIAGRAM

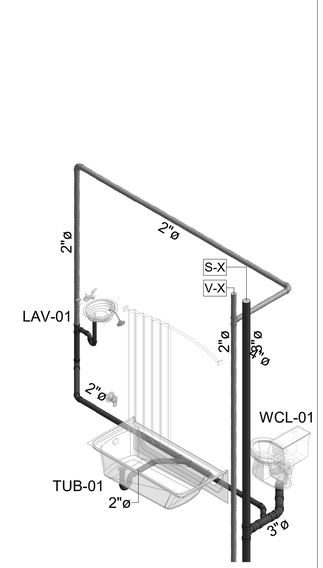

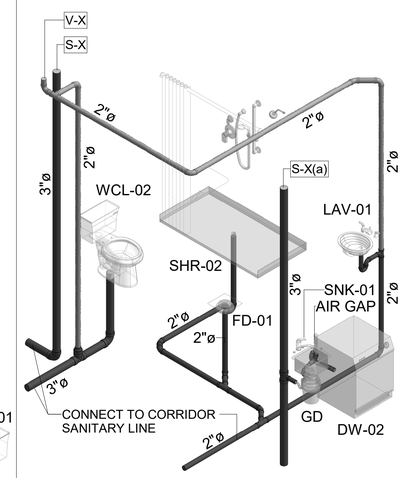

3 ACCESSIBLE DOUBLE QUEEN SUITE W/RIS SANITARY AND VENT RISER DIAGRAM

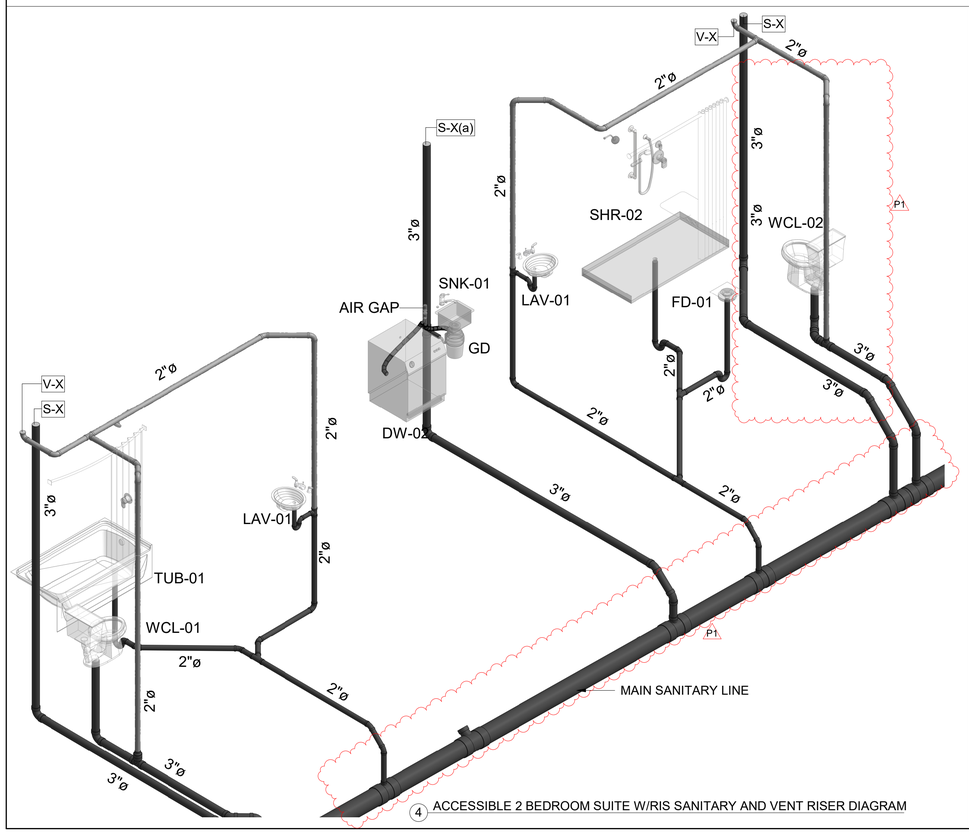

4 ACCESSIBLE 2 BEDROOM SUITE W/RIS SANITARY AND VENT RISER DIAGRAM

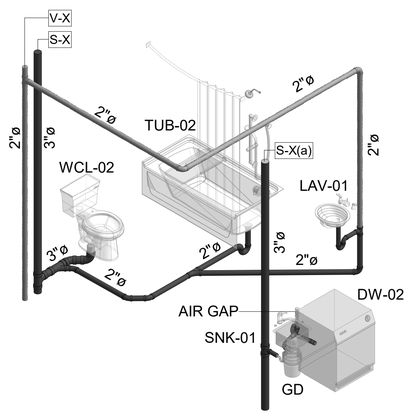

5 ACCESSIBLE DOUBLE QUEEN SUITE SANITARY AND VENT RISER DIAGRAM

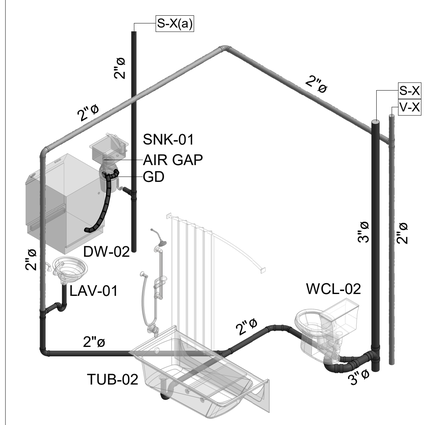

B-20-0180
City of Puyallup

6 ACCESSIBLE KING SUITE SANITARY AND VENT RISER DIAGRAM

BASE4

BASE4
2901 CLINT MOORE ROAD, #114
BOCA RATON, FLORIDA 33496
888.901.8008 www.base-4.com

RICARDO J. MUNIZ-GUILLET,AIA
5453 NW 106TH DR
CORAL SPRINGS, FL 33076

MEP ENGINEER
GARRY VERMAAS PhD, PE
2183 S BERRYS CHAPEL ROAD
FRANKLIN, TN 37069

Seal:

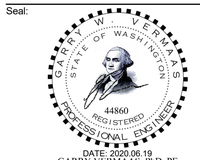

DATE: 2020.06.19
GARRY VERMAAS, PhD, PE
2183 S BERRYS CHAPEL ROAD
FRANKLIN TN 37069

Owner:

Dakota Legacy Group
-Hospitality Development-
4500 36TH AVE. S SUITE
200, FARGO, ND 58104
701.551.8000 (OFFICE)

HOMEWOOD SUITES BY HILTON

3500 S MERIDIAN, PUYALLUP, WA 98373

PROTOTYPE VERSION: V9.2 2014 FEB

ISSUE NO.	DELTA	ISSUE DATE	DESCRIPTION
2	P1	2020.06.03	ADDENDUM #1
1	P0	2020.02.21	ISSUED FOR PERMIT

CURRENT ISSUE

ISSUED FOR PERMIT

CURRENT ISSUE DATE
2020.02.21

DRAWN BY
NAT

CHECKED BY
GWV

PROJECT NO.
B4-124-1803

SHEET NAME

UNIT SANITARY & VENT RISER DIAGRAM-A

DRAWINGS NO.

P-305A

SEWER LOAD DEMAND	
FIXTURE	DFU
BATHROOM GROUP	5.0
SNK / DW	2.0

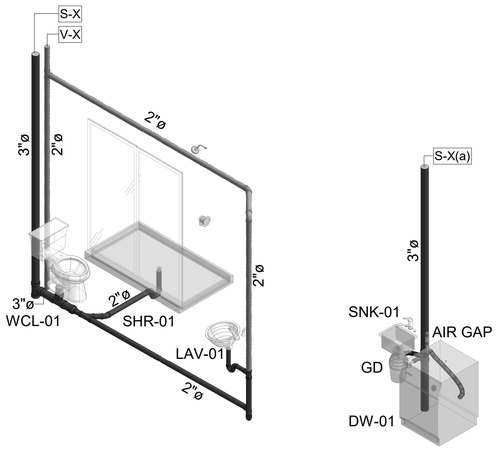

7 DOUBLE QUEEN SUITE SANITARY AND VENT RISER DIAGRAM

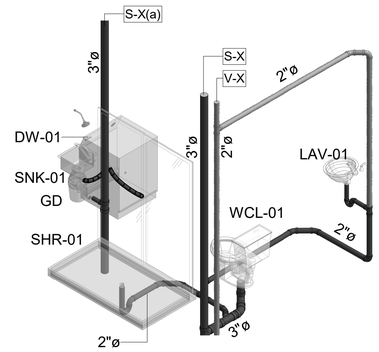

8 KING STUDIO 'A' CUSTOM SANITARY AND VENT RISER DIAGRAM

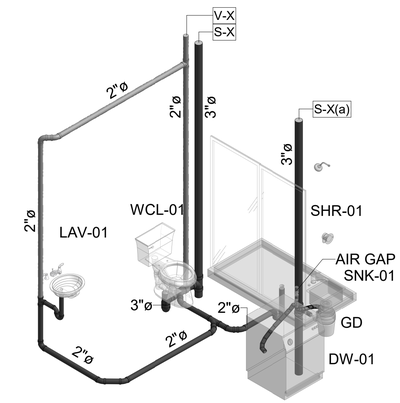

9 KING STUDIO 'A' SANITARY AND VENT RISER DIAGRAM

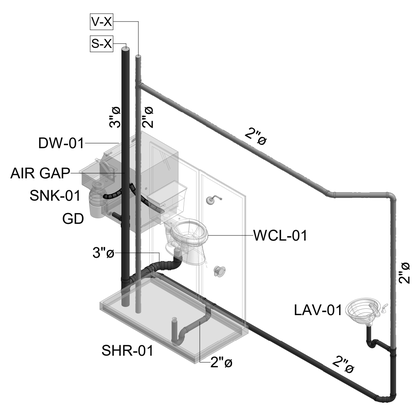

10 KING STUDIO 'B' SANITARY AND VENT RISER DIAGRAM

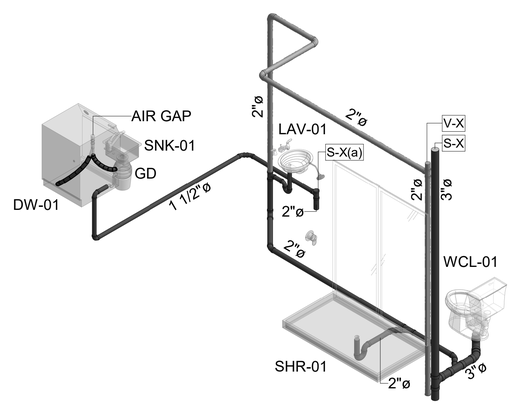

11 KING SUITE SANITARY AND VENT RISER DIAGRAM

NOT IN USE

B-20-0180
City of Puyallup

BASE4

BASE4
2901 CLINT MOORE ROAD, #114
BOCA RATON, FLORIDA 33496
888.901.8008 www.base-4.com

RICARDO J. MUNIZ-GUILLET,AIA
5453 NW 106TH DR
CORAL SPRINGS, FL 33076

MEP ENGINEER
GARRY VERMAAS PhD, PE
2183 S BERRYS CHAPEL ROAD
FRANKLIN, TN 37069

Seal:

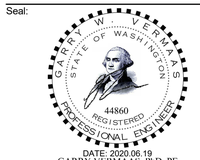

DATE: 2020.06.19
GARRY VERMAAS, PhD, PE
2183 S BERRYS CHAPEL ROAD
FRANKLIN TN 37069

Owner:

Dakota Legacy Group
-Hospitality Development-
4500 36TH AVE. S SUITE
200, FARGO, ND 58104
701.551.8000 (OFFICE)

HOMEWOOD SUITES BY HILTON

3500 S MERIDIAN, PUYALLUP, WA 98373

PROTOTYPE VERSION: V9.2 2014 FEB

ISSUE NO.	DELTA	ISSUE DATE	DESCRIPTION
1	P0	2020.02.21	ISSUED FOR PERMIT

CURRENT ISSUE

ISSUED FOR PERMIT

CURRENT ISSUE DATE
2020.02.21

DRAWN BY
NAT

CHECKED BY
GWV

PROJECT NO.
B4-124-1803

SHEET NAME

UNIT SANITARY & VENT RISER DIAGRAM-B

DRAWINGS NO.

P-305B

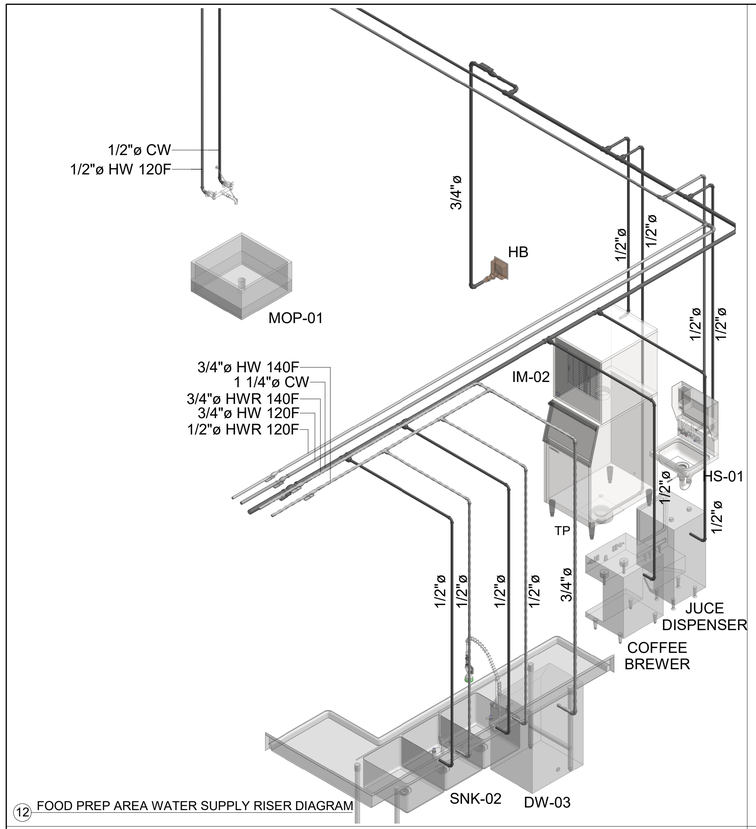

12 FOOD PREP AREA WATER SUPPLY RISER DIAGRAM

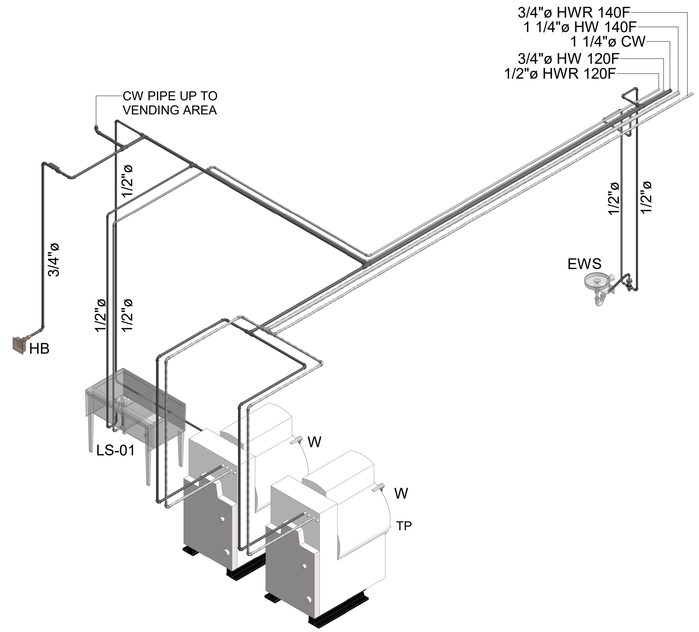

13 LAUNDRY AREA WATER SUPPLY RISER DIAGRAM

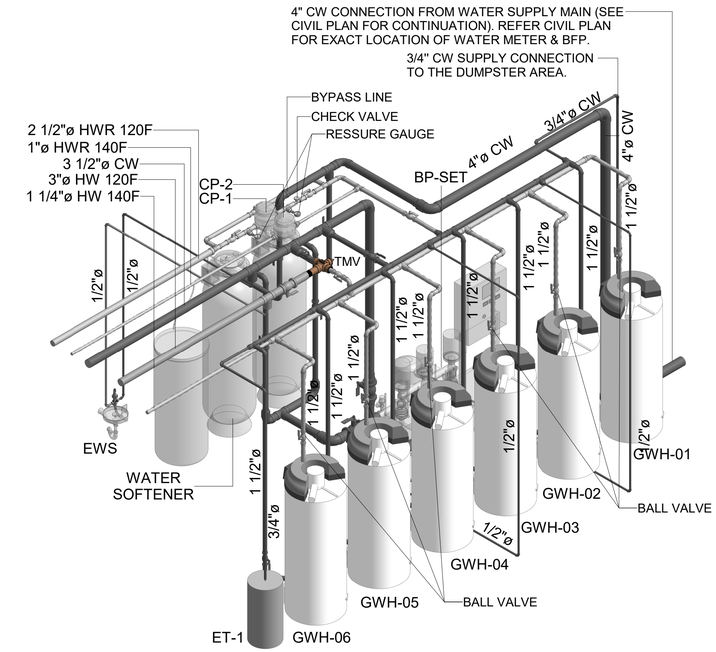

14 MECHANICAL ROOM WATER SUPPLY RISER DIAGRAM

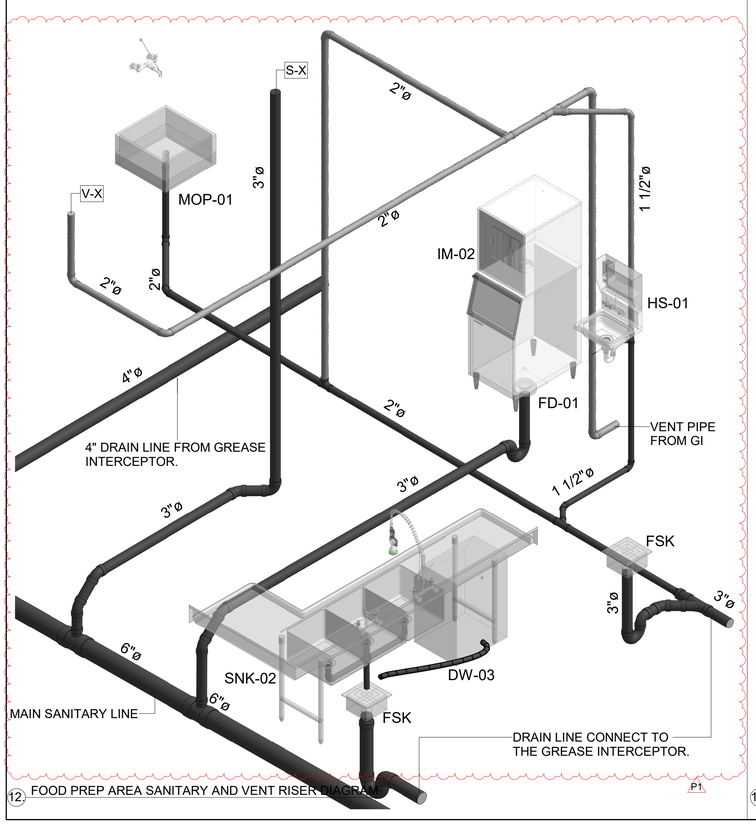

12 FOOD PREP AREA SANITARY AND VENT RISER DIAGRAM

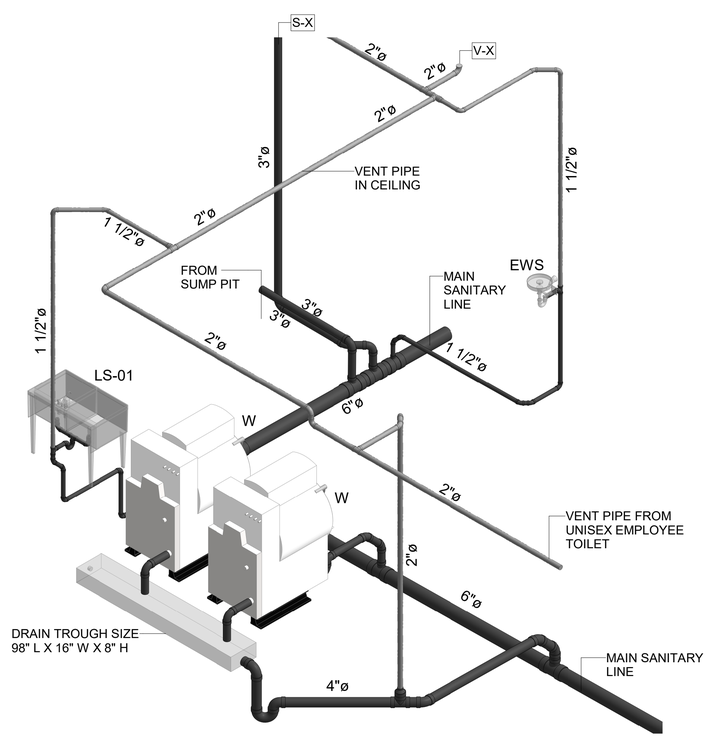

13 LAUNDRY AREA SANITARY AND VENT RISER DIAGRAM

NOT IN USE

B-20-0180
City of Puyallup

BASE4

BASE4
2901 CLINT MOORE ROAD, #114
BOCA RATON, FLORIDA 33496
888.901.8008 www.base-4.com

RICARDO J. MUNIZ-GUILLET,AIA
5453 NW 106TH DR
CORAL SPRINGS, FL 33076

MEP ENGINEER
GARRY VERMAAS PhD, PE
2183 S BERRYS CHAPEL ROAD
FRANKLIN, TN 37069

Seal:

GARRY W. VERMAAS
STATE OF WASHINGTON
44860
REGISTERED
PROFESSIONAL ENGINEER

DATE: 2020.06.19
GARRY VERMAAS, PhD, PE
2183 S BERRYS CHAPEL ROAD
FRANKLIN TN 37069

Owner:

Dakota Legacy Group
-Hospitality Development-
4500 36TH AVE. S SUITE
200, FARGO, ND 58104
701.551.8000 (OFFICE)

HOMEWOOD SUITES BY HILTON

3500 S MERIDIAN, PUYALLUP, WA 98373

PROTOTYPE VERSION: V9.2 2014 FEB

ISSUE NO.	DELTA	ISSUE DATE	DESCRIPTION
2	P1	2020.06.03	ADDENDUM #1
1	P0	2020.02.21	ISSUED FOR PERMIT

CURRENT ISSUE

ISSUED FOR PERMIT

CURRENT ISSUE DATE
2020.02.21

DRAWN BY
NAT

CHECKED BY
GWV

PROJECT NO.
B4-124-1803

SHEET NAME
UNIT WATER SUPPLY & SANITARY RISER DIAGRAM

DRAWINGS NO.
P-306

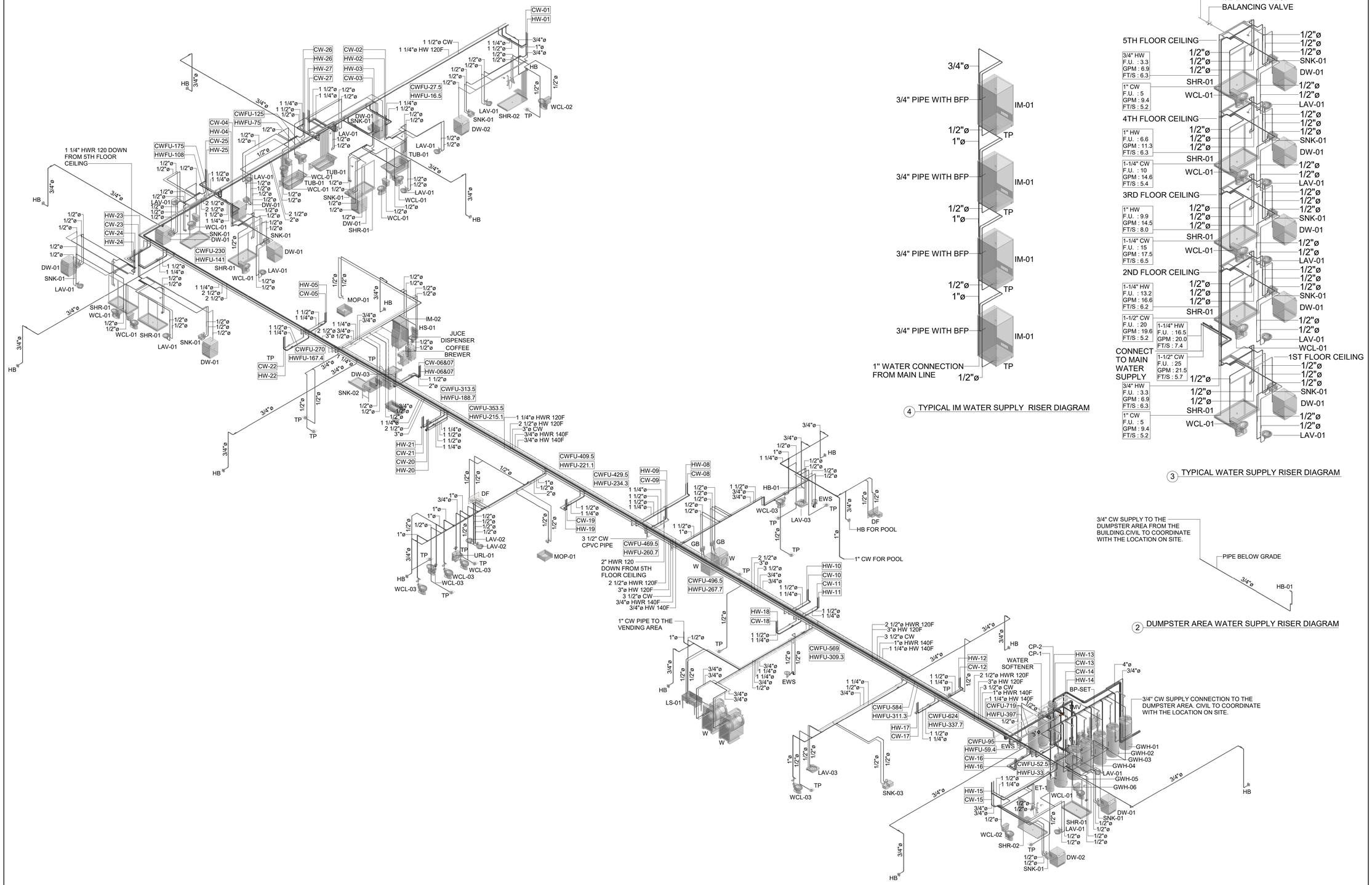

1 WATER SUPPLY RISER DIAGRAM

4 TYPICAL IM WATER SUPPLY RISER DIAGRAM

3 TYPICAL WATER SUPPLY RISER DIAGRAM

2 DUMPSTER AREA WATER SUPPLY RISER DIAGRAM

B-20-0180
City of Puyallup

BASE4

BASE4
2901 CLINT MOORE ROAD, #114
BOCA RATON, FLORIDA 33496
888.901.8008 www.base-4.com

RICARDO J. MUNIZ-GUILLET,AIA
5453 NW 106TH DR
CORAL SPRINGS, FL 33076

MEP ENGINEER
GARRY VERMAAS PhD, PE
2183 S BERRYS CHAPEL ROAD
FRANKLIN, TN 37069

Seal:

DATE: 2020.06.19
GARRY VERMAAS, PhD, PE
2183 S BERRYS CHAPEL ROAD
FRANKLIN TN 37069

Owner:

Dakota Legacy Group
-Hospitality Development-
4500 36TH AVE. S SUITE
200, FARGO, ND 58104
701.551.8000 (OFFICE)

HOMEWOOD SUITES BY HILTON

3500 S MERIDIAN, PUYALLUP, WA 98373

PROTOTYPE VERSION: V9.2 2014 FEB

ISSUE NO.	DELTA	ISSUE DATE	DESCRIPTION
1	P0	2020.02.21	ISSUED FOR PERMIT

CURRENT ISSUE

ISSUED FOR PERMIT

CURRENT ISSUE DATE
2020.02.21

DRAWN BY
NAT

CHECKED BY
GWV

PROJECT NO.
B4-124-1803

SHEET NAME

WATER SUPPLY RISER DIAGRAM

DRAWINGS NO.

P-307

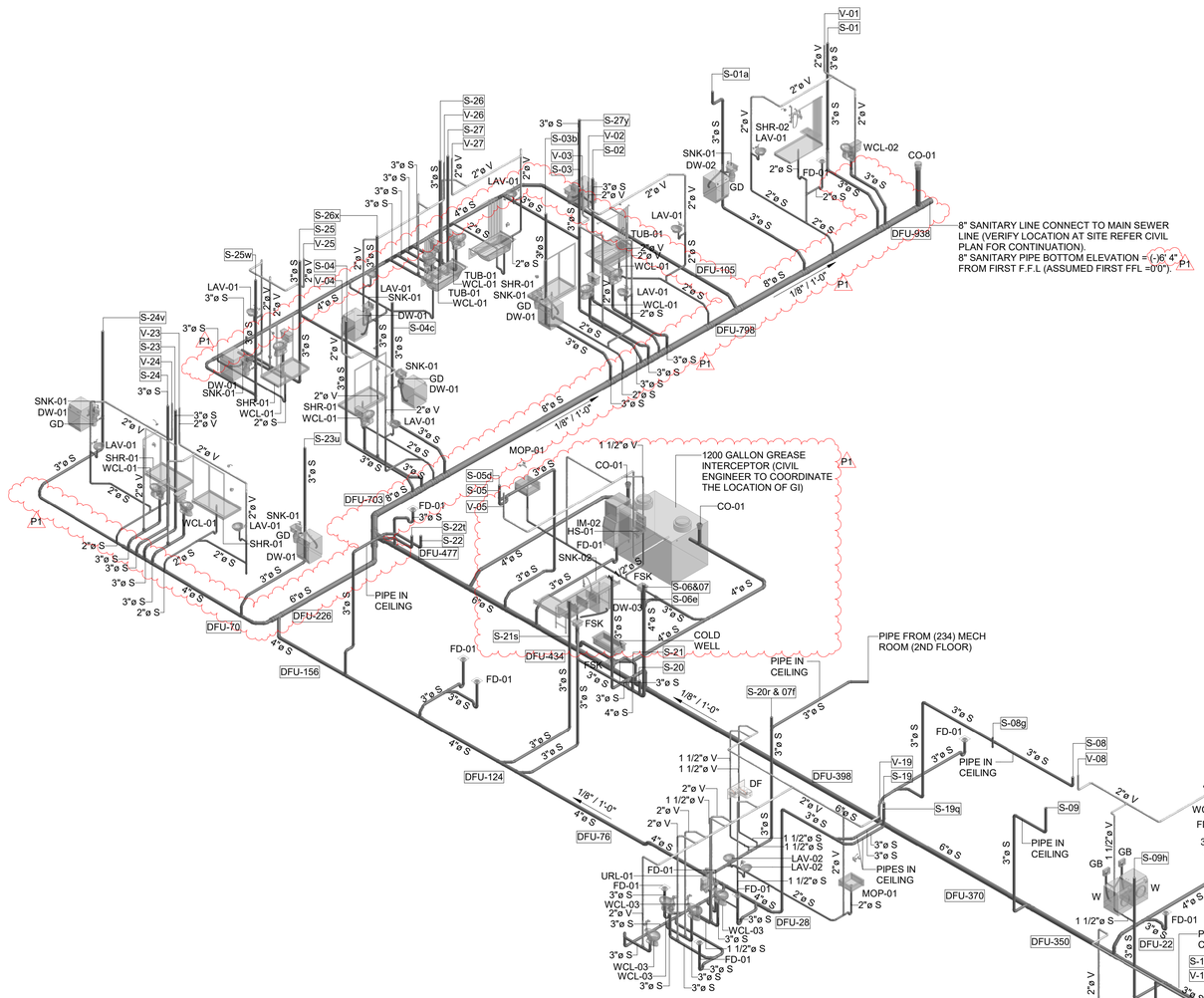

1 SANITARY & VENT RISER DIAGRAM

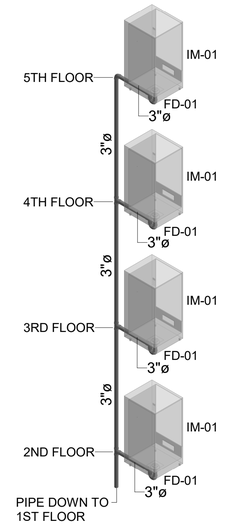

3 TYPICAL IM SANITARY & VENT RISER DIAGRAM

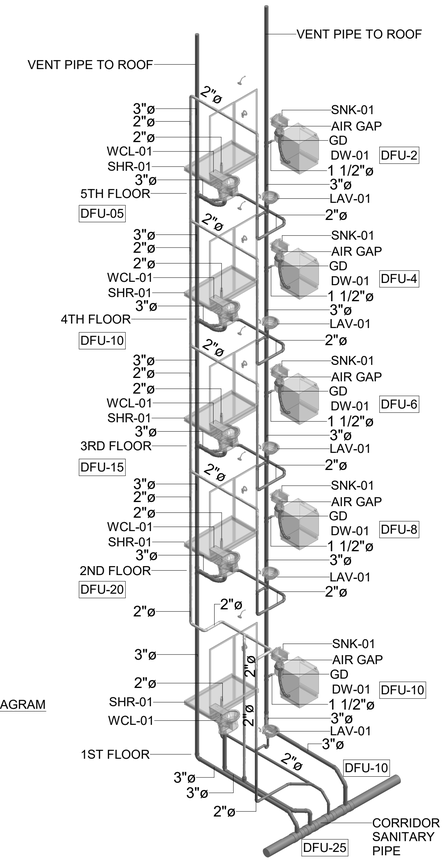

2 TYPICAL SANITARY & VENT RISER DIAGRAM

B-20-0180
City of Puyallup

BASE4
2901 CLINT MOORE ROAD, #114
BOCA RATON, FLORIDA 33496
888.901.8008 www.base-4.com

RICARDO J. MUNIZ-GUILLET,AIA
5453 NW 106TH DR
CORAL SPRINGS, FL 33076

MEP ENGINEER
GARRY VERMAAS PhD, PE
2183 S BERRYS CHAPEL ROAD
FRANKLIN, TN 37069

Seal:

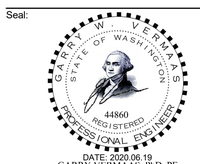

DATE: 2020.06.19
GARRY VERMAAS, PhD, PE
2183 S BERRYS CHAPEL ROAD
FRANKLIN TN 37069

Owner:

Dakota Legacy Group
-Hospitality Development-
4500 36TH AVE. S SUITE
200, FARGO, ND 58104
701.551.8000 (OFFICE)

HOMEWOOD SUITES BY HILTON
3500 S MERIDIAN, PUYALLUP, WA 98373

PROTOTYPE VERSION: V9.2 2014 FEB

ISSUE NO.	DELTA	ISSUE DATE	DESCRIPTION
2	P1	2020.06.03	ADDENDUM #1
1	P0	2020.02.21	ISSUED FOR PERMIT

CURRENT ISSUE

ISSUED FOR PERMIT

CURRENT ISSUE DATE
2020.02.21

DRAWN BY
NAT

CHECKED BY
GWV

PROJECT NO.
B4-124-1803

SHEET NAME

SANITARY & VENT RISER DIAGRAM

DRAWINGS NO.

P-308

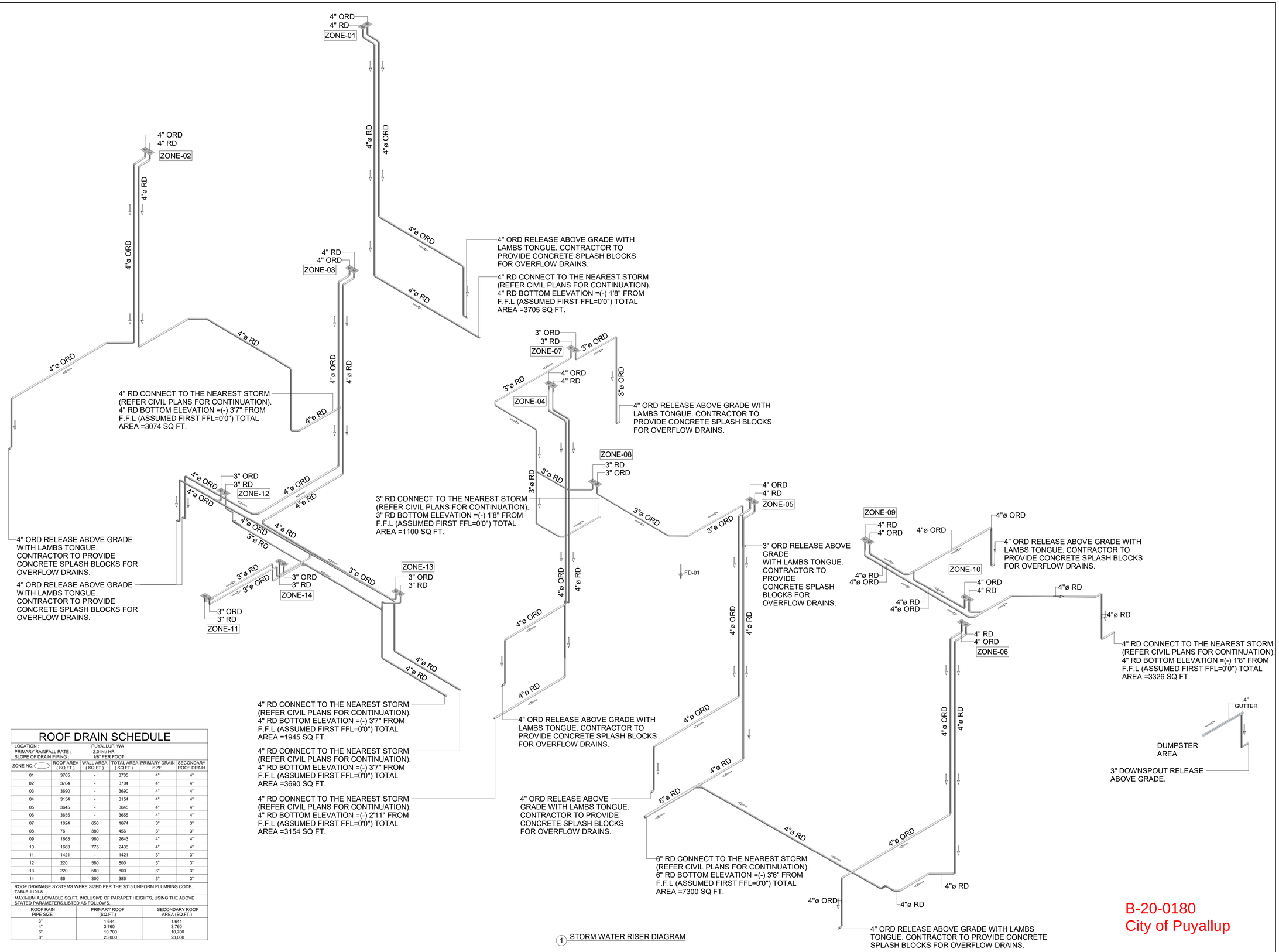

1 STORM WATER RISER DIAGRAM

ROOF DRAIN SCHEDULE

LOCATION : PUYALLUP, WA
PRIMARY RAINFALL RATE : 2.0 IN / HR
SLOPE OF DRAIN PIPING : 1/8" PER FOOT

ZONE NO.	ROOF AREA (SQ.FT.)	WALL AREA (SQ.FT.)	TOTAL AREA (SQ.FT.)	PRIMARY DRAIN SIZE	SECONDARY ROOF DRAIN
01	3705	-	3705	4"	4"
02	3704	-	3704	4"	4"
03	3690	-	3690	4"	4"
04	3154	-	3154	4"	4"
05	3645	-	3645	4"	4"
06	3655	-	3655	4"	4"
07	1024	650	1674	3"	3"
08	76	380	456	3"	3"
09	1663	980	2643	4"	4"
10	1663	775	2438	4"	4"
11	1421	-	1421	3"	3"
12	220	580	800	3"	3"
13	220	580	800	3"	3"
14	85	300	385	3"	3"

ROOF DRAINAGE SYSTEMS WERE SIZED PER THE 2015 UNIFORM PLUMBING CODE. TABLE 1101.8

MAXIMUM ALLOWABLE SQ.FT. INCLUSIVE OF PARAPET HEIGHTS, USING THE ABOVE STATED PARAMETERS LISTED AS FOLLOWS.

ROOF RAIN PIPE SIZE	PRIMARY ROOF (SQ.FT.)	SECONDARY ROOF AREA (SQ.FT.)
3"	1,644	1,644
4"	3,760	3,760
6"	10,700	10,700
8"	23,000	23,000

B-20-0180
City of Puyallup

BASE4
2901 CLINT MOORE ROAD, #114
BOCA RATON, FLORIDA 33496
888.901.8008 www.base-4.com

RICARDO J. MUNIZ-GUILLET,AIA
5453 NW 106TH DR
CORAL SPRINGS, FL 33076

MEP ENGINEER
GARRY VERMAAS PhD, PE
2183 S BERRYS CHAPEL ROAD
FRANKLIN, TN 37069

Seal:

GARRY W. VERMAAS
STATE OF WASHINGTON
44860
REGISTERED
PROFESSIONAL ENGINEER

DATE: 2020.06.19
GARRY VERMAAS, PhD, PE
2183 S BERRYS CHAPEL ROAD
FRANKLIN TN 37069

Owner:

Dakota Legacy Group
-Hospitality Development-
4500 36TH AVE. S SUITE
200, FARGO, ND 58104
701.551.8000 (OFFICE)

HOMEWOOD SUITES BY HILTON
3500 S MERIDIAN, PUYALLUP, WA 98373
PROTOTYPE VERSION: V9.2 2014 FEB

ISSUE NO.	DELTA	ISSUE DATE	DESCRIPTION
1	P0	2020.02.21	ISSUED FOR PERMIT

CURRENT ISSUE

ISSUED FOR PERMIT

CURRENT ISSUE DATE
2020.02.21

DRAWN BY
NAT

CHECKED BY
GWV

PROJECT NO.
B4-124-1803

SHEET NAME

STORM WATER RISER DIAGRAM

DRAWINGS NO.

P-309

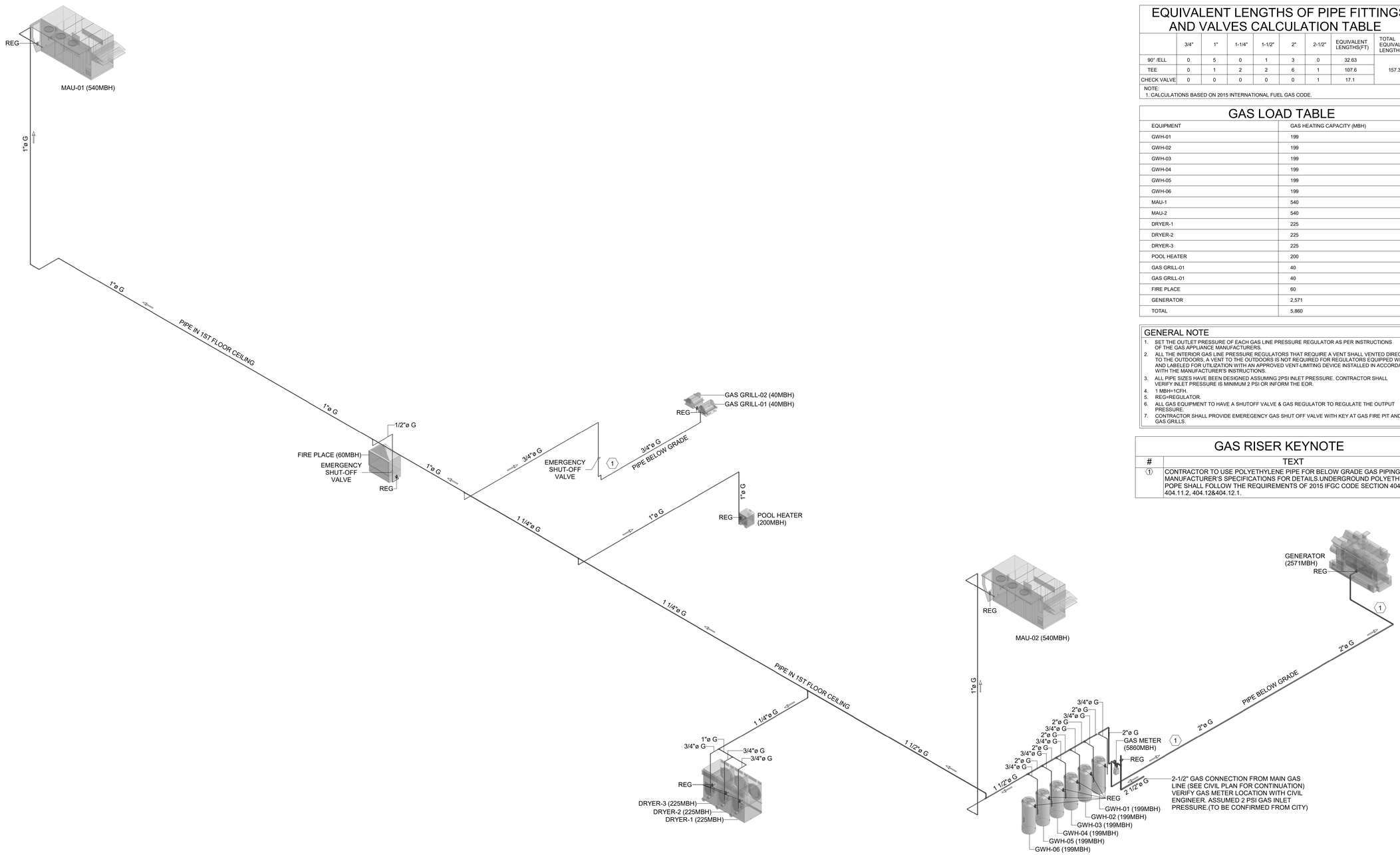

1 GAS RISER DIAGRAM

B-20-0180
City of Puyallup

GAS SUPPLY CALCULATION TABLE

1. PRESSURE DROP : 1.0 PSI FROM GAS METER TO EACH LINE REGULATOR.
2. PIPE MATERIAL : "SCHEDULE 40 METALLIC PIPE"
3. TOTAL LENGTH FROM MAU-01 TO GAS METER: 315 FT, SEE DIAGRAM DRAWING FOR SEGMENT LENGTH.
4. FITTINGS EQUIVALENT LENGTH: 157.33 FT.
5. EQUIVALENT TOTAL LENGTH (PLUS FITTING EQUIVALENT LENGTH): 472.33 FT.

NOTE:

PIPING MATERIAL:	SCHEDULE 40 METALLIC PIPE.
GAS: NATURAL.	INLET PRESSURE: 2 PSI.
PRESSURE DROP: 1.0 PSI	SPECIFIC GRAVITY: 0.60.

1. CALCULATIONS BASED ON 2015 INTERNATIONAL FUEL GAS CODE FROM TABLE 402.4(5)

EQUIVALENT LENGTHS OF PIPE FITTINGS AND VALVES CALCULATION TABLE

	3/4"	1"	1-1/4"	1-1/2"	2"	2-1/2"	EQUIVALENT LENGTHS(FT)	TOTAL EQUIVALENT LENGTHS(FT)
90° /ELL	0	5	0	1	3	0	32.63	157.33
TEE	0	1	2	2	6	1	107.6	
CHECK VALVE	0	0	0	0	0	1	17.1	

NOTE:
1. CALCULATIONS BASED ON 2015 INTERNATIONAL FUEL GAS CODE.

GAS LOAD TABLE

EQUIPMENT	GAS HEATING CAPACITY (MBH)
GWH-01	199
GWH-02	199
GWH-03	199
GWH-04	199
GWH-05	199
GWH-06	199
MAU-1	540
MAU-2	540
DRYER-1	225
DRYER-2	225
DRYER-3	225
POOL HEATER	200
GAS GRILL-01	40
GAS GRILL-01	40
FIRE PLACE	60
GENERATOR	2,571
TOTAL	5,860

GENERAL NOTE

1. SET THE OUTLET PRESSURE OF EACH GAS LINE PRESSURE REGULATOR AS PER INSTRUCTIONS OF THE GAS APPLIANCE MANUFACTURERS.
2. ALL THE INTERIOR GAS LINE PRESSURE REGULATORS THAT REQUIRE A VENT SHALL VENTED DIRECTLY TO THE OUTDOORS. A VENT TO THE OUTDOORS IS NOT REQUIRED FOR REGULATORS EQUIPPED WITH AND LABELED FOR UTILIZATION WITH AN APPROVED VENT-LIMITING DEVICE INSTALLED IN ACCORDANCE WITH THE MANUFACTURER'S INSTRUCTIONS.
3. ALL PIPE SIZES HAVE BEEN DESIGNED ASSUMING 2PSI INLET PRESSURE. CONTRACTOR SHALL VERIFY INLET PRESSURE IS MINIMUM 2 PSI OR INFORM THE EOR.
4. 1 MBH=1CFH.
5. REG=REGULATOR.
6. ALL GAS EQUIPMENT TO HAVE A SHUTOFF VALVE & GAS REGULATOR TO REGULATE THE OUTPUT PRESSURE.
7. CONTRACTOR SHALL PROVIDE EMEREGENCY GAS SHUT OFF VALVE WITH KEY AT GAS FIRE PIT AND GAS GRILLS.

GAS RISER KEYNOTE

#	TEXT
1	CONTRACTOR TO USE POLYETHYLENE PIPE FOR BELOW GRADE GAS PIPING.SEE MANUFACTURER'S SPECIFICATIONS FOR DETAILS.UNDERGROUND POLYETHYLENE POPE SHALL FOLLOW THE REQUIREMENTS OF 2015 IFGC CODE SECTION 404.11, 404.11.2, 404.12&404.12.1.

BASE4
2901 CLINT MOORE ROAD, #114
BOCA RATON, FLORIDA 33496
888.901.8008 www.base-4.com

RICARDO J. MUNIZ-GUILLET,AIA
5453 NW 106TH DR
CORAL SPRINGS, FL 33076

MEP ENGINEER
GARRY VERMAAS PhD, PE
2183 S BERRYS CHAPEL ROAD
FRANKLIN, TN 37069

Seal:

GARRY W. VERMAAS
STATE OF WASHINGTON
44860
REGISTERED
PROFESSIONAL ENGINEER

DATE: 2020.06.19
GARRY VERMAAS, PhD, PE
2183 S BERRYS CHAPEL ROAD
FRANKLIN TN 37069

Owner:

Dakota Legacy Group
-Hospitality Development-
4500 36TH AVE. S SUITE
200, FARGO, ND 58104
701.551.8000 (OFFICE)

HOMEWOOD SUITES BY HILTON

3500 S MERIDIAN, PUYALLUP, WA 98373

PROTOTYPE VERSION: V9.2 2014 FEB

ISSUE NO.	DELTA	ISSUE DATE	DESCRIPTION
1	P0	2020.02.21	ISSUED FOR PERMIT

CURRENT ISSUE

ISSUED FOR PERMIT

CURRENT ISSUE DATE
2020.02.21

DRAWN BY
NAT

CHECKED BY
GWV

PROJECT NO.
B4-124-1803

SHEET NAME

GAS SUPPLY RISER DIAGRAM

DRAWINGS NO.

P-310

PLUMBING FIXTURE SCHEDULE

DWG MARK	FIXTURE TYPE	MANUFACTURER	MODEL	DESCRIPTION	FITTING MODEL & DESCRIPTION						WATER SUPPLY		SANITARY & VENT	
					TRIM & VALVE	SEAT	FAUCET	DRAIN	SHOWER HEAD	MISCLLANEOUS	CW	HW	WASTE/SOIL	VENT
SHR-01	SHOWER IN GUESTROOM BATHROOM	MINCEY MARBLE	SP-3460-C/SF	STANDARD RECTANGLE SHOWER PAN, CENTER DRAIN, SIZE-34" X 60", DRAIN OPENING-3-1/4" HOLE WIDTH, FLANGE-1"ATTACHED AT FACTORY, CURB-INTEGRAL L-3"W X 3 1/2"H, MATERIAL MINCEY CLASSIC.	KOHLER , VALVE TRIM , MODEL: K-PLS15601-4-CP CHROME	-	-	K-9132-CP	KOHLER K-72419-CP SHOWERHEAD	-	1/2"	1/2"	2"	-
SHR-02	ROLL-IN SHOWER IN ADA GUESTROOM	MINCEY MARBLE	SP-3162-C/SF	62" x 31" x 1-1/2" SOLID ONE PIECE CONSTRUCTION SHOWER PAN ADA COMPLIANT ROLL-IN SHOWER PAN WITH A CENTER DRAIN AND A LIGHTLY TEXTURED WITH NON-SLIP FLOOR.	KOHLER , VALVE TRIM , MODEL: K-PLS15601-4-CP CHROME	BOBRICK FOLDING SHOWER SEAT WITH PADDED CUSHION, MODEL:B-517,518	-	K-9132-CP	KOHLER K-72419-CP SHOWERHEAD KOHLER K-22166-G HANDSHOWER	-	1/2"	1/2"	2"	-
TUB-01	BATH TUB IN GUESTROOM BATHROOM	KOHLER	K-715-0(L) OR K-716-0(R)	CAST IRON WITH SAFEGUARD® FINISH, INTEGRAL APRON, LEFT OR RIGHT DRAIN, 60"(1524 MM) X 30-1/4"(768 MM) X 14 "(356MM).	KOHLER , VALVE TRIM , MODEL: K-PLS15601-4-CP CHROME	-	-	WATCO 900-BN BATH TUB DRAIN	KOHLER K-72419-CP SHOWERHEAD	-	1/2"	1/2"	2"	-
TUB-02	BATH TUB IN ADA GUESTROOM BATHROOM	KOHLER	K-715-0(L) OR K-716-0(R)	CAST IRON WITH SAFEGUARD® FINISH, INTEGRAL APRON, LEFT OR RIGHT DRAIN, 60"(1524 MM) X 30-1/4"(768 MM) X 14 "(356MM).	KOHLER , VALVE TRIM , MODEL: K-PLS15601-4-CP CHROME	ACCESSIBLE PORTABLE/SECURED BATH SEAT, PHENOLIC, MODEL NO. WHPTB265150PW	-	WATCO 900-BN BATH TUB DRAIN	KOHLER K-72419-CP SHOWERHEAD KOHLER K-22166-G HANDSHOWER.	-	1/2"	1/2"	2"	-
LAV-01	LAVATORY IN GUEST & ADA GUESTROOM BATHROOM	KOHLER	CAXTON K-2210	"VITREOUS CHINA UNDER MOUNT LAVATORY WITH OVERFLOW DRAIN AND CLAMP ASSEMBLY" BOWL: L-19 1/4";H-10 3/4", W16 1/4" (FITS STANDARD 14" X 17" INCH COUNTERTOP CUTOUT.	-	-	KOHLER,WIDESPREAD BATHROOM SINK FAUCET, K-15261-4RA	-	-	-	1/2"	1/2"	1-1/2"	1-1/2"
LAV-02	LAVATORY IN MEN'S & WOMEN'S TOILET	KOHLER	CAXTON K-2210	"VITREOUS CHINA UNDER MOUNT LAVATORY WITH OVERFLOW DRAIN AND CLAMP ASSEMBLY" BOWL: L-19 1/4";H-10 3/4", W16 1/4" (FITS STANDARD 14" X 17" INCH COUNTERTOP CUTOUT.	-	-	KOHLER GEOMETRIC INSIGHT™ TOUCHLESS, K-7516 SINGLE-HOLE TOUCHLESS BATHROOM SINK FAUCET	-	-	-	1/2"	1/2"	1-1/2"	1-1/2"
LAV-03	LAVATORY IN UNISEX TOILET	KOHLER	BRENHAM™ K-1997-1	WALL MOUNT BATHROOM SINK WITH OVERFLOW DRAIN INCLUDES WALL HANGER VITREOUS CHINA, WHITE (SIZE:21-15/16" X 19-3/4").	-	-	KOHLER GEOMETRIC INSIGHT™ TOUCHLESS, K-7516 SINGLE-HOLE TOUCHLESS BATHROOM SINK FAUCET	-	-	-	1/2"	1/2"	1-1/2"	1-1/2"
WCL-01	WATER CLOSET TANK TYPE GUESTROOM BATHROOM	AMERICAN STANDARD	215CA.104	"CADET PRO" ELONGATED FLOOR MOUNTED, VITREOUS CHINA, HIGH EFFICIENCY TOILET (HET), ULTRA-LOW CONSUMPTION. DIMENSION : 30-1/8"X17-3/8"X28-7/8", COLOR: WHITE.	-	SEAT: #5321.110 EVERCLEAN® ELONGATED SEAT WITH SLOW CLOSE SNAP-OFF HINGES	-	-	-	-	1/2"	-	3"	2"
WCL-02	WATER CLOSET TANK TYPE ADA GUESTROOM BATHROOM	AMERICAN STANDARD	215AA.104	"CADET PRO" ELONGATED FLOOR MOUNTED, VITREOUS CHINA, HIGH EFFICIENCY TOILET (HET), ULTRA-LOW CONSUMPTION. DIMENSION : 30-1/8" x 17-3/8" x30-3/8", COLOR: WHITE.	-	SEAT: #5321.110 EVERCLEAN® ELONGATED SEAT WITH SLOW CLOSE SNAP-OFF HINGES	-	-	-	-	1/2"	-	3"	2"
WCL-03	WATER CLOSET FLOOR MOUNTED (FLUSHOMETER) FOR PUBLIC TOILET	AMERICAN STANDARD	3461.001	VITREOUS CHINA, FLOOR MOUNT FLUSHOMETER VALVE TOILET, HIGH EFFICIENCY, LOW CONSUMPTION, OPERATES IN THE RANGE OF 1.1 GPF TO 1.6 GPF (4.2 LPF TO 6.0 LPF) HIGH EFFICIENCY FLUSH VALVE (1.28 GPF OR 1.6/1.1 GPF DUAL FLUSH) 10"X12" WATER SURFACE AREA, 28-1/4"X14"X16-1/2" COLOR-WHITE.	-	AMERICAN STANDARD, 5901.100.020OPEN FRONT W/NO COVER, WHITE	AMERICAN STANDARD 6047.161.002 1.6GPF	-	-	-	1"	-	3"	2"
SNK-01	SINK IN GUEST & ADA GUESTROOM	KOHLER	UCL 1515	RECTANGULAR BOWL,NO FAUCET HOLES; REQUIRES WALL-OR COUNTER-MOUNT FAUCET, LUSTER BOWL FINISH. 14-1/4" X 11-3/4" X 7".	-	-	KOHLER,CORALAIS,KITCHEN SINK FAUCET,K-P15176-P	-	-	-	1/2"	1/2"	1-1/2"	1-1/2"
SNK-02	3-COMPARTMENT SINK IN FOOD PREP.	ADVANCE TABCO	94-3-54-18RL	THREE COMPARTMENT POT SINK WITH TWO DRAINBOARDS STAINLESS STEEL OF TOTAL LENGTH 91" AND A BOWL SIZE OF 20" X 16"X 14".	-	-	T&S BRASS AND BRONZE WORKS, INC. FAUCET MODEL: B-0133-BR, B-0231-EE	-	-	-	1/2"	1/2"	1-1/2"	1-1/2"
SNK-03	2-COMPARTMENT SINK IN BREAK ROOM	ADVANCE TABCO	DI-2-10	TWO COMPARTMENT DROP-IN SINK FEATURES A DEEP DRAWIN ONE-PIECE BOWL DESIGN, 20 GAUGE, TYPE 304 STAINLESS STEEL (2) 10" X 14" X 10" BOWLS.	-	-	-	-	-	-	1/2"	1/2"	1-1/2"	1-1/2"
HS-01	HAND SINK IN FOOD PREP.	ADVANCE TABCO	7-PS-87	HAND SINK WITH SOAP DISPENSER, MADE OF 20 GAUGE 304 STAINLESS STEEL, OVERALL DIMENSIONS: 17 1/4" X 15 1/4" X 26 1/2".	-	-	-	-	-	-	1/2"	1/2"	1-1/2"	1-1/2"
LS-01	2-COMPARTMENT SINK IN LAUNDRY	MUSTEE	27F	OVERALL 34" X 40" X 24", 19 GALLON CAPACITY PER TUB, EXTRA DEEP 13" TUBS WITH SMOOTH SURFACES, ACCOMMODATES SINGLE OR DUAL-HANDLE FAUCETS. 4" OR 8" CENTERS, FLOOR MODEL INCLUDES HEAVY GAUGE STEEL LEGS WITH ADJUSTABLE LEVELERS.	-	-	MOEN-74998, TWO HANDLE LAUNDRY FAUCET, CHROME PLATED FINISH	-	-	-	1/2"	1/2"	2"	2"
IM-02	ICEMAKER IN FOOD PREP.	HOSHIZAKI	KM-340MAH KM-340MWH	CRESCENT CUBER ICEMAKER, AIR-COOLED. CRESCENT CUBER ICEMAKER, WATER-COOLED.	-	-	-	-	-	-	3/4"	-	2"	-
MOP-1	MOP SINK IN FOOD PREP.	FIAT PRODUCTS	TSB100	24" X 24" SQUARE, TERRAZZO 12" MOP SERVICE BASIN.	-	-	FIAT MODEL NO: 830AA	-	-	-	1/2"	1/2"	2"	2"
DW-01	DISH WASHER IN GUEST ROOM	GE APPLIANCES	GSM2260VSS	GE SPACEMAKER® UNDER-THE-SINK DISHWASHER STAINLESS STEEL FINISH OF DIMENSIONS (W) 24" X (H) 34" X (D)26 3/4".	-	-	-	-	-	-	-	1/2"	2"	2"
DW-02	DISH WASHER IN ADA GUEST ROOM	GE APPLIANCES	GLDT696JSS	GE SPACEMAKER® UNDER-THE-SINK DISHWASHER STAINLESS STEEL FINISH OF DIMENSIONS (W) 24" X (H) 32 11/32" X (D)24".	-	-	-	-	-	-	-	1/2"	2"	2"
DW-03	DISH WASHER IN FOOD PREP.	HOBART	LXEH-2	THE LXEH BASE UNDERCOUNTER IS EQUIPPED WITH AUTOMATIC PUMPED DRAIN 32 RACKS PER HOUR CAPACITY.	-	-	-	-	-	-	-	1/2"	2"	2"
URL-1	URINAL IN PUBLIC AREA	KOHLER	K-4989-T	THE SIPHON JET URINAL SHALL BE MADE OF VITREOUS CHINA WITH A 3/4" TOP SPUD. URINAL SHALL BE 1.0 GALLON (3.7 L) FLUSH. URINAL SHALL BE ADA COMPLIANT WHEN RIM IS MOUNTED NO HIGHER THAN 17" (43.2CM) FROM FINISHED FLOOR.	AMERICAN STANDARD MANUAL URINAL FLUSH VALVE MODEL NO : 6045.101.002	-	-	-	-	-	-	-	2"	2"
EWS	EYE WASH STATION	HAWS CORP.	7260BT-7270BT	EYE WASH STATION WALL MOUNTED, STAINLESS STEEL HAND OPERATING CONTROL, GREEN.	-	-	-	-	-	-	1/2"	-	2"	2"
CLO-1	FLOOR CLEANOUT	ZURN INDUSTRIES,INC.	ZN-1400-NH	FLOOR CLEAN OUT WITH CARPET CLAMPING FRAME.	-	-	-	-	-	-	-	-	4"	-
CLO-2	WALL CLEAN OUT	JOSAM,INC.	58600-CO	WALL CLEAN OUT WITH ACCESS COVER, STAINLESS STEEL COVER.	-	-	-	-	-	-	-	-	4"	-
FD-01	FLOOR DRAIN RESTROOM	JAYR.SMITH MGF.CO	2005 SERIES	FLOOR DRAIN WITH ADJUSTABLE STRAINER HEADS, NICKEL BRONZE.	-	-	-	-	-	-	1/2"	-	3"	-
		PROVENT SYSTEMS	C-6333-EBTH	TRAP GUARD FLOOR DRAIN WITH RECESS STRAINER.										
FD-02	FLOOR DRAIN POOL EQUIPMENT/MECH.ROOM/ LAUNDRY	JAY R. SMITH MFG.CO.	2320	FLOOR DRAIN WITH DUCO CAST IRON BODY, MEDIUM DUTY DRAIN WITH TRACTOR GRATE AND 8-1/2" ROUND ADJUSTABLE TOP, NICKEL BRONZE.	-	-	-	-	-	-	1/2"	-	3"	-
		PROVENT SYSTEMS	C-6331-ETG	MOUNT FLANGE FROM THE TOP WITH GYPCRETE FROM THE BOTTOM WITHOUT USE T-3SO STRAINER WHEN DISCHARGING A RELIEF VALVE INTO THE HUB DRAIN.										
HB	WALL HYDRANT	ZURN INDUSTRIES,INC.	Z-1305	ANTI-SIPHON, NON-FREEZE, AUTOMATIC DRAINING,ENCASED WALL HYDRANT FOR FLUSH INSTALLATION OPTIONAL 3/4" AND 1" HOSE CONNECTION.	-	-	-	-	-	-	3/4"	-	-	-
ROOF HYDRANT	ROOF HYDRANT	ZURN INDUSTRIES,INC.	Z-1388	EXPOSED, NON-FREEZE, LEAD FREE ROOF HYDRANT, DURA COATED CAST IRON HEAD, 3/4" INLET CONNECTION.	-	-	-	-	-	-	3/4"	-	-	-
GB	WASHING MACHINE GREY BOX	GUY GRAY	82026	FURNISH & INSTALL GALVANIZED CENTER DRAIN OUTLET BOX.	-	-	-	-	-	-	-	-	-	-
TP	TRAP PRIMER	PRECISION PLUMBING PRODUCTS	OREGON NO.1	PROVIDE DISTRBUTION WHERE UNIT SERVES MORE THAN ONE DRAIN.	-	-	-	-	-	-	1/2"	-	-	-
GD	GARBAGE DISPOSAL	WHIRPOOL	GC1000PE	GALVANIZED STEEL GRINDING WHEEL & SHREDDER RING.	-	-	-	-	-	-	-	-	-	-
COFFEE BREWER	COFFEE BREWER IN FOOD PREP	FETCO	CBS-2152H-TS	DUAL COFFEE BREWER WITH PORTABLE SERVER,HANDLE OPERATED SERIES OF SIZE 36-3/4" H X 12-3/4" W X 20-3/8"D.	-	-	-	-	-	-	1/2"	-	-	-
FSK-01	FLOOR SINK IN FOOD PREP	JAYR.SMITH MGF.CO	3140	ACID RESISTANT COATED, SANITARY FLOOR AND INDIRECT WASTE DRAINS WITH MEDIUM RECEPTOR, DEEP AND EXTRA DEEP RECEPTOR,12-1/2" SQUARE NICKEL BRONZE TOP.	-	-	-	-	-	-	-	-	3"	-
RD	ROOF DRAIN	ZURN INDUSTRIES,INC.	Z-100	CAST IRON BODY WITH ADJUSTABLE EXTENSION SLEEVE, POLYTHELENE DOME, COMBINED FLASHING CLAMP AND GRAVEL STOP.	-	-	-	-	-	-	-	-	4"	-
ORD	OVERFLOW ROOF DRAIN	ZURN INDUSTRIES,INC.	Z-100-W4	OVERFLOW STANDPIPE TYPE, DUCO CAST IRON BODY WITH ADJUSTABLE EXTENSION SLEEVE, POLYETHYLENE DOME, COMBINED FLASHING CLAMP AND GRAVEL STOP.	-	-	-	-	-	-	-	-	4"	-
DF	DRINKING FOUNTAIN	HAWS	1119	UNIT IS MADE OF 18 GAUGE TYPE 304 STAINLESS STEEL WITH A SATIN FINISH THAT RESISTS STAINS AND CORROSION.	-	-	-	-	-	-	1/2"	-	1-1/2"	1-1/2"

NOTE : TO BE INSTALLED ACCORDING TO MANUFACTURER'S RECOMMENDATIONS REFER TO PLANS FOR LOCATIONS INSTALLATION TO MEET ADA GUIDELINES
BASE4 STRONGLY SUGGESTS TO USE AO SMITH CIRCUIT SOLVER THERMOSTATIC BALANCING VALVES FOR HOT WATER RE-CIRC LOOP. CIRCUIT SOLVER PRODUCT REP-JOHN ALTEPETER 219-384-4161.

WATER DEMAND SUMMARY

FIXTURE	CWFU X NUM	HWFU X NUM
BATHROOM GROUP (SHR/TUB, WCL, LAV)	3.5 x 108	1.8 x 108
SNK AND DW (GUESTROOM)	1.5 x 108	1.5 x 108
WCL (PUBLIC AREAS)	10 x 6	-
URL (PUBLIC AREAS)	5 x 1	-
LAV (PUBLIC AREAS)	1.5 x 4	1.5 x 4
MOP SINK	3 x 1	3 x 1
WASHER	3 x 2	3 x 2
EWS	0.5 x 3	0.5 x 3
LAUNDRY TUB	2 x 1	2 x 1
3-COMPARTMENT SINK	3 x 1	3 x 1
SERVICE SINK	2 x 1	2 x 1
HAND SINK	1.5 x 1	1.5 x 1
WM	2.25 x 2	2.25 x 2
DW IN FOOD PREP.	-	1.4 x 1
DF	0.5 x 2	-
TP	0.5 x 30	-
ICE MACHINE	0.5 x 5	-
COFFEE M/C & JUCE DISPENSER	0.5 x 2	-
HOSE BIB	2.25 x 15	-
ROOF HYDRANT	1 x 1	-
YARD HYDRANT	1 x 1	-
TOTAL W/SFU	689.75	387.3
TOTAL GPM	160.8	100.3

SEWER LOAD SUMMARY

FIXTURE	DFU X NUM	TOTAL
BATHROOM GROUP (SHR/TUB, WCL, LAV)	5 x 108	540
SNK AND DW (GUESTROOM)	2 x 108	216
WCL (PUBLIC AREAS)	4 x 6	24
URL (PUBLIC AREAS)	2 x 1	2
LAV (PUBLIC AREAS)	2 x 4	8
MOP SINK	3 x 1	3
WASHER	3 x 2	6
EWS	2 x 3	6
LAUNDRY TUB	2 x 1	2
3-COMPARTMENT SINK	3 x 1	3
SERVICE SINK	2 x 1	2
HAND SINK	2 x 1	2
WM	2 x 2	4
DW IN FOOD PREP.	2 x 1	2
DF	2 x 2	4
FD	2 x 30	60
FSK	2 x 2	4
	TOTAL DFU	888

PUMP SCHEDULE

MARK	CP-1	CP-2	SP-1	BP-SET
MANUFACTURER	GRUNDFOS	GRUNDFOS	HYDROMATIC	GRUNDFOS
MODEL NO.	UPS 32-160 F	UPS 32-80 F	SHEF 100	95055336 HYDRO MPC E 3CRE20-02
SIZE	1-1/2"	3/4"	2"	4"
TYPE	INLINE	INLINE	SUBMERSIBLE	INLINE
SERVICE	120^0 HWR	140^0 HWR	ELEVATOR SUMP & SUMP PIT	PRESSURE BOOSTING
GPM	14.0	6.0	90	200
TOTAL HEAD (FT/PSI)	15 PSI	7 PSI	20(FT)	40 PSI
FLUID TEMP.(F)	120	140	-	-
IMPELLER DIA	-	-	-	-
KW	0.625	0.280	0.746	3.7
RPM	-	-	3450	-
ELECTRICAL (VOLT/PH)	115/1 V	115/1 V	230/1	3 x 208-230 V
OPER.WT.(LBS)	N/A	N/A	N/A	N/A
REMARKS	1	2	3	-

REMARKS
1. CIRCULATING PUMP OR GUEST ROOM SYSTEM(120^0) AQUASTAT TO START PUMP WHEN TEMP. DROPS BELOW (110^0)AND STOPS AT 120^0.
2. CIRCULATING PUMP FOR KITCHEN SYSTEM (140^0)AQUASTAT TO START WHEN TEMP. DROPS BELOW (130^0) AND STOPS AT (140^0).
3. REFER SHEET P-202B FOR SUMP PUMP LOCATION.

DOMESTIC WATER HEATER SCHEDULE

MARK	GWH- 1,2,3,4,5 & 6
MANUFACTURER	A.O.SMITH CYCLONE
MODEL NO.	BTH-199A Mxi
TYPE	STORAGE TANK
FUEL	NATURAL GAS
BURNER MOTOR(KW)	-
INPUT (MBH)	199
HOT WATER CAPACITY 100 F RISE	235
STORAGE (GAL)	100 USG
FUEL ISZE (IN.)	3/4"
ELECTRICAL (VOLT/PH)	120V AC,60 Hz
REMARKS	1,2,3

REMARKS:
1. RECOVERY RATE BASED ON 100^0 F RISE
2. PROVIDE SIDE WALL DIRECT VENT / SEALED COMBUSTION.
3. SEE SPECIFICATION FOR APPROVED EQUALS

EXPANSION TANK SCHEDULE

MARK	ET-1
MANUFACTYRER	AMTROL
MODEL NO.	ST-60V-C
SERVICE	GWH- 1,2,3,4,5 & 6
TANK CAPACITY	25
CONNECTION SIZE	3/4"
REMARKS	1

DRAIN TROUGH SCHEDULE

MARK	MANUFACTURER	MODEL	LENGTH "A"	WIDTH "B"	HEIGHT "C"
DT-1	H & M	-	8'-2"	1'-4"	0'-8"

BACK FLOW PREVENTER SCHEDULE

MARK	BFP-1	BFP-2
MANUFACTYRER	WATTS	WATTS
MODEL NO.	957	SD3
SERVICE	BUILDING	ICE MACHINE & COFFEE BREWER
TYPE	RED. PRESSURE	DBL. CHECK
SIZE	4"	1/4", 3/8"
REMARKS	1	1

REMARKS
1. SEE SPECIFICATION FOR APPROVED EQUALS

SLOPE OF HORIZONTAL DRAINAGE PIPE

SIZE(INCHES)	MINIMUM SLOPE (INCH/FOOT)
2- 1/2 OR LESS	1/4
3 TO 6	1/8
8 OR LARGER	1/16

TABLE 203.1(2) OF THE 2015 UNIFORM PLUMBING CODE

THERMOSTATIC MIXING VALVE SCHEDULE

MARK	TMV-1
MANUFACTYRER	HOLBY
MODEL NO.	HOLBY 3000
SIZE	3"
MATERIAL	BRONZE
PRESSURE DROP (PSI)	10
SIZE MAXIMUM PRESSURE (PSI)	300 PSI
MAXIMUM TEMPERATURE (F)	120

GREASE INTERCEPTOR SIZING

INTERCEPTOR SIZE = NO. OF MEALS PER PEAK HOUR X WASTE FLOW RATE X RETENTION TIME X STORAGE FACTOR

NO. OF MEALS PER PEAK HOUR = SEATING CAPACITY X PEAK FACTOR
= 47 X 1
= 47
WASTE FLOW RATE = 6 GALLON FLOW
RETENTION TIME = 2.5 HOURS
STORAGE FACTOR = 1.5
INTERCEPTOR SIZE = 47 X 6 X 2.5 X 1.5
= 1057.5 GALLONS

GREASE INTERCEPTOR SIZE = 1200 GALLONS

NOTE: GREASE INTERCEPTOR SIZING IS DONE AS PER APPENDIX-H OF THE UNIFORM PLUMBING CODE.

P1

WATER SOFTENER SCHEDULE-ECO WATER MANUFACTURER'S

MODEL	RESIN TANK DIAMETER "A"	RESIN TANK HEIGHT "B"	INLET OUTLET HEIGHT "C"	OVERALL HEIGHT "D"	BRINE TANK DIAMETER "E"	BRINE TANK HEIGHT "F"	SINGLE "G"	RESIN TANK SIZE (IN.)	RESIN QUANTITY (CU. FT.)	CONNECTING PIPE SIZE	SALT TANK CAPACITY (LBS.)	OPERATING PRESSURE	OPERATING TEMPERATURE	MAX. DRAIN FLOW (GPM)	RECHARGE WATER USE (GAL.)	MAX. CLEAR WATER IRONS	ELECTRICAL RATING
EWS252S	24"	72"	81"	86.5"	31"	51"	60"	24" X 72"	8	2" NPT	1500	30-125 PSI	35-100°F	12	302	20 PPM	24V/60Hz

GREASE INTERCEPTOR FOR SCHEDULE

MARK	MANUFACTURER	MODEL	LIQUID CAPACITY GALLONS	WIDTH "A"	OVERALL LENGTH"B"	TANK HEIGHT "C"	INLET "D"	OUTLET "E"	MIN. EXCAVATION WIDTH	MIN. EXCAVATION LENGTH	DEPTH OF BURRY
GI-1	JENSEN PRECAST (OR APPROVED EQUAL)	JP1200G	1200	5'-9"	8'-6"	6'-0"	5'-0"	4'-9"	6'-9"	9'-6"	1' to 6'

P1

BASE4
2901 CLINT MOORE ROAD, #114
BOCA RATON, FLORIDA 33496
888.901.8008 www.base-4.com

RICARDO J. MUNIZ-GUILLET,AIA
5453 NW 106TH DR
CORAL SPRINGS, FL 33076

MEP ENGINEER
GARRY VERMAAS PhD, PE
2183 S BERRYS CHAPEL ROAD
FRANKLIN, TN 37069

Seal:

GARRY W. VERMAAS
STATE OF WASHINGTON
44860
REGISTERED
PROFESSIONAL ENGINEER

DATE: 2020.06.19
GARRY VERMAAS, PhD, PE
2183 S BERRYS CHAPEL ROAD
FRANKLIN TN 37069

Owner:

Dakota Legacy Group
-Hospitality Development-
4500 36TH AVE. S SUITE 200, FARGO, ND 58104
701.551.8000 (OFFICE)

HOMEWOOD SUITES BY HILTON
3500 S MERIDIAN, PUYALLUP, WA 98373

PROTOTYPE VERSION: V9.2 2014 FEB

ISSUE NO.	DELTA	ISSUE DATE	DESCRIPTION
2	P1	2020.06.03	ADDENDUM #1
1	P0	2020.02.21	ISSUED FOR PERMIT

B-20-0180
City of Puyallup

CURRENT ISSUE
ISSUED FOR PERMIT

CURRENT ISSUE DATE
2020.02.21

DRAWN BY
NAT

CHECKED BY
GWV

PROJECT NO.
B4-124-1803

SHEET NAME
SCHEDULE

DRAWINGS NO.
P-401