APPROVED

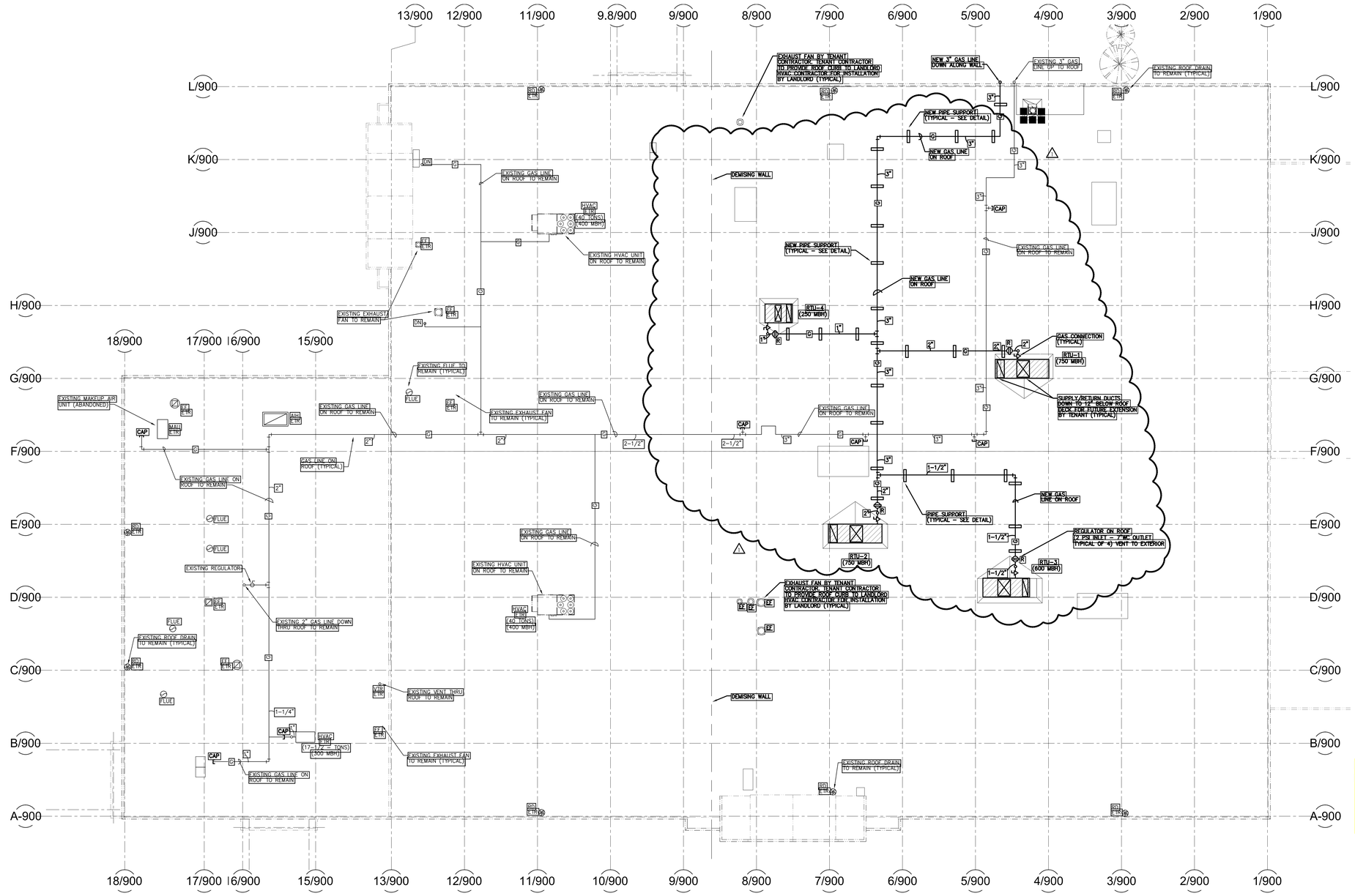

1 MP-300 Roof Plan - Mechanical/Plumbing
SCALE: 1/16" = 1'-0"

Reviewed 1/07/2020
DLSubject to field inspector approvals

HAVE FULL SIZED PLANS ON SITE FOR CITY BUILDING INSPECTOR

REVISON TO PERMIT B-19-1101 FOR GAS PIPING CHANGES TO EXISTING AND ADDING ADDTIONAL GAS PIPING TO NEW UNITS

PLENUM NOTE

CEILING SPACE OF THIS BUILDING IS USED AS A RETURN AIR PLENUM. ALL CONTRACTORS ARE TO ENSURE THAT ALL MATERIALS USED AS PART OF THEIR RESPECTIVE SYSTEMS ARE APPROVED FOR USE IN PLENUM SPACES OR PROTECTED AS REQUIRED FOR USE IN A PLENUM SPACE PER ALL APPLICABLE CODES.

SYMBOLS

ETR – EXISTING TO REMAIN
– CONNECT TO EXISTING

GAS LOAD SUMMARY (UNIT 900)

TAG	MBH
RTU-1	750
RTU-2	750
RTU-3	600
RTU-4	250
TOTAL	2350 MBH

GAS PIPING SIZED PER TABLE 402.4 (3) OF THE 2018 INTERNATIONAL FUEL GAS CODE
TOTAL DEVELOPED LENGTH = 250 FEET

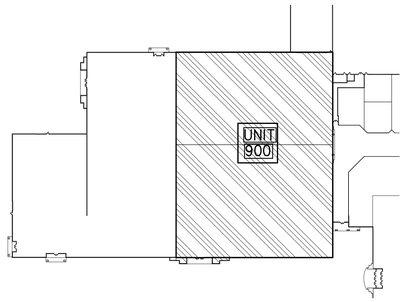

KEY PLAN
SCALE: N/A

Developer: CAFARO - Est. 1949 - Commercial & Industrial Real Estate Developers
5577 Youngstown - Warren Road Niles, Ohio 44446 Phone: 330-747-2661

Seal:

Architect: RICK PARTIKA, AIA
5577 Youngstown - Warren Road Niles, Ohio 44446 Phone: 330-747-2661 E-MAIL: rpartika@cafaroco mpany.com

Revision No.	Description	Date	Issued by
	AS BUILT		CAJ
	ISSUED FINAL	12-17-21	CAJ
		01-28-21	

Sheet Title: ROOF PLAN - MECHANICAL/PLUMBING

Project Information: SHELL PACKAGE - ROUND ONE UNIT 900
SOUTH HILL MALL
3500 S. Meridian St Puyallup, WA 98373

Project No.:	062-900
Date:	12-03-19
Drawn By:	KAN
Checked By:	CAJ

MP-300

THE INFORMATION CONTAINED ON THIS DRAWING IS THE EXCLUSIVE PROPERTY OF THE LANDLORD. THE USE OF ANY PORTIONS OF THIS DRAWING OR DESIGN FOR PURPOSES OTHER THAN THE SPECIFIC PROJECT NAMED HEREIN IS STRICTLY PROHIBITED WITHOUT THE EXPRESSED WRITTEN CONSENT OF THE LANDLORD AND ITS ARCHITECT.

11/18/2019 4:27:24 PM E:\Departments\AECL_Old\Properties\South Hill Mall\Architecture & Engineering\Tenant Projects\Unit 0900 - 2019 Round One\Drawings\062-900 Arch.rvt