PRCTI20220471

MERIDIAN POINTE APARTMENTS
RESIDENTIAL UNIT REHABILITATION

407 VALLEY AVE. N.E.
PUYALLUP, WA 98372

ABBREVIATIONS

AB	ANCHOR BOLT
ACOUS	ACOUSTIC
ACT	ACOUSTICAL CEILING TILE
AFF	ABOVE FINISHED FLOOR
ALUM	ALUMINUM
ARCH	ARCHITECTURAL
AT	ACOUSTIC TILE
AUTO	AUTOMATIC
BITUM	BITUMINOUS
BL	BORROWED LIGHT
BLDG	BUILDING
BLK	BLOCK
BM	BEAM
BOT	BOTTOM
CAB	CABINET
CC	CUBICLE CURTAIN
CEM	CEMENT
CG	CORNER GUARD
CJ	CONTROL JOINT
CL	CENTER LINE
CLG	CEILING
CLOS	CLOSET
CLR	CLEAR
CMU	CONCRETE MASONRY UNIT
CO	CASED OPENING
COL	COLUMN
CONC	CONCRETE
CONT	CONTINUOUS
CONTR	CONTRACT OR CONTRACTOR
CSS	CLINICAL SERVICE SINK
CT	CERAMIC TILE
CTR	COUNTER
CTR FLASH	COUNTER FLASH
DET	DETAIL
DIA	DIAMETER
DIM	DIMENSION
DIS	DISPENSER
DN	DOWN
DWG	DRAWING
EA	EACH
EJ	EXPANSION JOINT
EL	ELEVATION
ELEC	ELECTRIC
ELEV	ELEVATOR
EQ	EQUAL
EQUIP	EQUIPMENT
EXIST	EXISTING
FD	FLOOR DRAIN
FDN	FOUNDATION
FEC	FIRE EXTINGUISHER CABINET
FHC	FIRE HOSE CABINET
FHV	FIRE HOSE VALVE
FIN	FINISH
FL	FLOOR
FLASH	FLASHING
FR	FRAME
FT	FEET OR FOOT
FTG	FOOTING
FURR	FURRING
GA	GAUGE
GALV	GALVANIZED
GL	GLASS
GYP BD	GYPSUM BOARD
HC	HOLLOW CORE
HFS	HALF FULL SIZE
HM	HOLLOW METAL
HORIZ	HORIZONTAL
HT	HEIGHT
HTG	HEATING
ID	INSIDE DIAMETER
IN	INCH
INCL	INCLUDED
INFO	INFORMATION
INSUL	INSULATION
INT	INTERIOR
JC	JANITOR CLOSET
JT	JOINT
LAM	LAMINATED
LAT	LAY-IN ACOUSTICAL TILE
LAV	LAVATORY
LK	LOCKERS
MAS	MASONRY

ABBREVIATIONS

MAT	MATERIAL
MAX	MAXIMUM
MECH	MECHANICAL
MED	MEDICINE
MET	METAL
MET STD	METAL STUD
MFR	MANUFACTURER
MIN	MINIMUM
MISC	MISCELLANEOUS
ML	METAL LATH
MTD	MOUNTED
MW	MILLWORK
N	NORTH
NIC	NOT IN CONTRACT
NO	NUMBER
NOM	NOMINAL
NTS	NOT TO SCALE
O2	OXYGEN
OC	ON CENTER
OD	OUTSIDE DIAMETER
OH	OPPOSITE HAND
OPNG	OPENING
PL	PLATE
PLAS	PLASTIC LAMINATE
PLAS	PLASTER
PLMB	PLUMBING
PTN	PARTITION
R	RUBBER
RAD	RADIUS
RD	ROOF DRAIN
RECP	RECEPTACLE
REF	REFERENCE
REFRIG	REFRIGERATOR
REINF	REINFORCE
REQD	REQUIRED
RESIL	RESILIENT
REV	REVISION
RM	ROOM
S	SLIDE
S/S	SERVICE SINK
SC	SOLID CORE
SCH	SCHEDULE
SECT	SECTION
SERV	SERVICE
SHT	SHEET
SIM	SIMILAR
SL	SLIDING
SM	SHEET METAL
SNK	SINK
SPEC	SPECIFICATIONS
SQ	SQUARE
SS	STAINLESS STEEL
STD	STANDARD
STL	STEEL
STORE	STORAGE
STR	STRUCTURAL
SUSP	SUSPEND
T/C	TOP OF CURB
TB	TACKBOARD
TEL	TELEPHONE
THK	THICK
TK	THICKNESS
TOIL	TOILET
TRANS	TRANSFORMER
TV	TELEVISION
TYP	TYPICAL
UL	UNDERWRITERS LABORATORIES
UNO	UNLESS OTHERWISE NOTED
V	VINYL
VB	VIEW BOXES
VCT	VINYL COMPOSITION TILE
VERT	VERTICAL
VEST	VESTIBULE
VIF	VERIFY IN FIELD
W	WIDTH
W /	WITH
W / O	WITHOUT
WC	WHEELCHAIR
WC	WATER CLOSET
WD	WOOD
WP	WATERPROOF
WT	WEIGHT
WWF	WIELDED WIRE FABRIC

VICINITY MAP

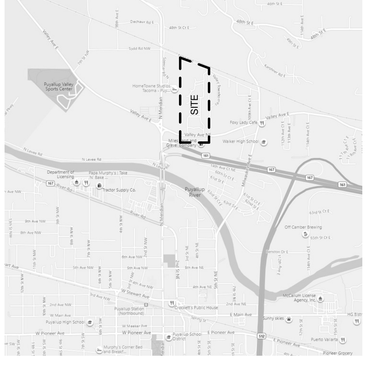

PROJECT INFORMATION

PROJECT SCOPE	UNIT REHABILITATION
PARCEL NUMBER:	0420222056, 0420222055, 0420226014, 0420226015, 0420226016, 0420222051, 0420226013
PROJECT LOCATION	407 VALLEY AVE N.E., PUYALLUP, WA 98372
SITE ZONING	RM-20: HIGH DENSITY MULTI-FAMILY RESIDENTIAL
ZONING JURISDICTION	CITY OF PUYALLUP
SITE USE	R-2, TYPE VB
LANDSCAPE CATEGORY	
SET BACK - FRONTAGE:	N/A
SET BACK - SIDE:	N/A
SET BACK - REAR:	N/A
SITE AREA	N/A
LOT COVERAGE TOTAL	N/A
IMPERVIOUS SURFACE COVERAGE	N/A
UNIT DENSITY	N/A
BUILDING HEIGHT LIMIT PER ZONING	N/A

MATERIAL LEGEND

EARTH	
AGGREGATE / POROUS	
CONCRETE	
CEMENT / CONCRETE UNDERLAYMENT	
CONCRETE ASPHALT	
RIGID INSULATION	
BATT INSULATION	

SYMBOLS LEGEND

SIM 1 A101 — BUILDING SECTION

SIM 1 A101 — CALLOUTS

Ref 1 A101 — EXTERIOR ELEVATIONS

1 1 1 — INTERIOR ELEVATIONS

SCOPE OF WORK:

THE SCOPE OF WORK COMPRISES OF THE REMOVAL AND REPLACEMENT OF EXISTING APPLIANCES, FIXTURES AND FLOORING THROUGHOUT. THE FOLLOWING ITEMS INCLUDE:

1) REMOVE AND REPLACE EXISTING GRAY POLY WATER LINES WITH WIRSBO/PEX PIPING WITHIN THE UNITS. ALL NEW HOT WATER LINES TO BE INSULATED. DRYWALL REMOVAL WHERE GRAY POLY WATER LINES ARE LOCATED AND/OR NEW PIPING TO BE INSTALLED.

2) EXISTING COPPER PIPING, WASTE LINES, FIRE SPRINKLERS AND HEAD, AND WATER SUPPLY LINE TO BUILDINGS TO REMAIN.

3) WHERE DRYWALL IS REMOVED WITHIN A RATED ASSEMBLY, THE DRYWALL SHALL BE REPLACED WITH 5/8" TYPE X DRYWALL (CERTAINTEED OR EQUAL) AND FIRESTOP SEALANT (STI WF300) WILL BE APPLIED AT ANY PENETRATIONS THROUGH THE RATED ASSEMBLIES.

4) REPLACE EXISTING CABINETS LIKE FOR LIKE AS WELL AS COUNTERTOPS. NO CHANGE TO EXISTING ELEVATION OF CABINETS FOR STANDARD UNITS. EXISTING ADA UNITS TO REMAIN ACCESSIBLE WHERE THE TOP OF SINK RIM WILL NOT EXCEED 34" FROM FINISH FLOOR. REMOVABLE DOORS AND BOTTOMS SHELF/TOE KICKS TO PROVIDE UNDER SINK AND WORKSTATION FOR 60" MIN CLEARANCE (WIDTH) AND 27" MIN. CLEARANCE UNDER SINK. EXISTING WALLS WILL NOT BE MOVED WITH THE RENOVATION. TO THE EXTENT POSSIBBLE, BEST EFFORTS WILL BE MADE WITHIN EXISTING KITCHEN AND BATHROOM FOOTPRINTS TO MEET CURRENT ADA STANDARDS.

5) REPLACE EXISTING FLOORING MATERIAL LIKE FOR LIKE.

6) REPLACE MILLWORK, INTERIOR DOORS AND HARDWARE LIKE FOR LIKE.

7) REPLACE EXISTING PLUMBING FIXTURES INCLUDING DISPOSALS. NO CHANGE TO EXISTING LOCATIONS OR COUNT.

8) REPLACE HOT WATER TANKS INCLUDING SEISMIC STRAP AND EXPANSION TANK.

9) REPLACE LAVATORIES.

10) REPLACE AUTO WASHER BOX ALL LOCATED WITHIN THE INTERIOR UNIT WALLS.

11) REPLACE ANGLE STOPS

12) REPLACE SHOWER VALVE INCLUDING RISER TO HEAD AND STUB TO SPOUT.

13) REPLACE PLASTIC LAMINATE TUB SURROUND WITH LIKE FOR LIKE.

14) REPLACE ALL EXISTING ELECTRICAL DEVICES.

15) REPLACE EXISTING BATHROOM FANS WITH DUAL SPEED EXHAUST FANS. NO NEW DUCTWORK; EXISTING DUCTWORK AND CEILING TO REMAIN.

16) REPLACE APPLIANCES.

17) PAINT INTERIOR UNITS.

18) REPLACE EXISTING SMOKE & CARBON MONIXIDE DETECTOR IN ALL UNIT HALLWAYS. ADD SELF-CONTAINED, BATTERY OPERATED SMOKE ALARMS IN ALL UNIT BEDROOMS.

SHEET INDEX

SHEET #	SHEET NAME	REV. #	REV. DATE
1.GENERAL			
G-001	COVER SHEET		
5.ARCHITECTURAL			
A-100	OVERALL SITE PLAN - PHASE I		
A-101	OVERALL SITE PLAN - PHASE II		
A-213	ENLARGED UNIT PLAN - 1 BED/1 BATH		
A-214	ENLARGED UNIT PLAN - 2 BED/1 BATH		
A-215	ENLARGED UNIT PLAN - 2 BED/2 BATH		
A-216	ENLARGED UNIT PLAN - 3 BED/2 BATH		

THE APPROVED CONSTRUCTION PLANS, DOCUMENTS AND ALL ENGINEERING MUST BE POSTED ON THE JOB AT ALL INSPECTIONS IN A VISIBLE AND READILY ACCESSIBLE LOCATION.

FULL SIZED LEDGIBLE COLOR PLANS ARE REQUIRED TO BE PROVIDED BY THE PERMITEE ON SITE FOR INSPECTION

Approval of submitted plans is not an approval of omissions or oversights by this office or noncompliance with any applicable regulations of local government. The contractor is responsible for making sure that the building complies with all applicable codes and regulations of the local government.

PROJECT TEAM

OWNER — MERIDIAN POINTE APARTMENTS, LLC
17786 DES MOINES MEMORIAL DR.,
BURIEN, WA 98148

PHONE: 206.241.2600
CONTACT: SEAN McKENNA
EMAIL: sean@farrellpi.com

CONTRACTOR — FARRELL-McKENNA CONSTRUCTION, LLC
17786 DES MOINES MEMORIAL DRIVE.,
BURIEN, WA 98148

PHONE: 206.241.2600
CONTACT: SEAN McKENNA
EMAIL: Sean@farrellpi.com

ARCHITECT — ROSS DECKMAN & ASSOCIATES, INC.
207 4TH AVE. S.E.
PUYALLUP, WA. 98372

PHONE: 253.840.9405
CONTACT: BILL BOWDISH
EMAIL: bill@rdarchitect.com

City of Puyallup
Building
APPROVED

See permit for additional requirements.

JMontgomery
03/31/2022
7:37:39 AM

CITY OF PUYALLUP STATE OF WASHINGTON

REVISIONS

#	CURRENT REVISION DESCRIPTION	REV. DATE

R D + A

ROSS DECKMAN & ASSOCIATES INC.
207 FOURTH AVENUE SOUTHEAST,
PUYALLUP, WASHINGTON 98372

PHONE: 253 . 840 . 9405
FAX: 253 . 840 . 9503

8925 REGISTERED ARCHITECT
WILLIAM BOWDISH
STATE OF WASHINGTON

AGENCY REVIEW
09/14/2021

PROJECT
MERIDIAN POINTE APARTMENTS
RESIDENTIAL UNIT REHABILITATION
407 VALLEY AVE. N.E.
PUYALLUP, WA 98372
COVER SHEET

#	DESC.	DATE

APPROVAL STAMPS

City of Puyallup
Development & Permitting Services
ISSUED PERMIT

Building	Planning
Engineering	Public Works
Fire	Traffic

JOB NO.:	1922
ISSUE DATE:	09/14/2021
REVISED:	
DRAWN BY:	BM
SHEET	G-001

9/14/2021 9:48:15 AM

P:\1922 Meridian Pointe Apartments\05-Drawings\1922 Meridian Pointe Apartments Units.rvt

PRCTI20220471

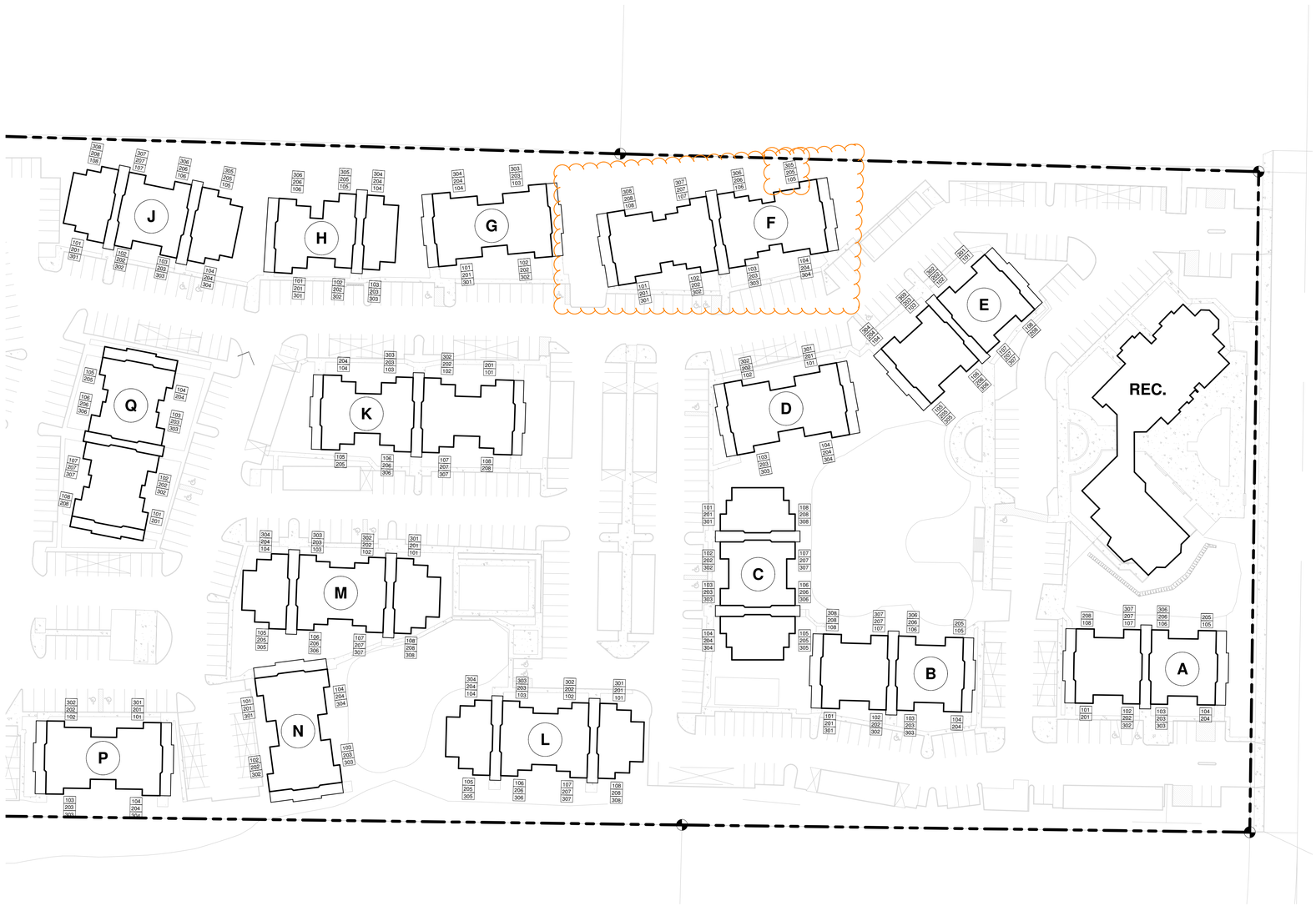

OVERALL SITE PLAN - PHASE I

1" = 50'-0"

NORTH

BUILDING 'A' UNITS

UNIT TYPE	NET AREA	COUNT
BUILDING 'A'		
1 BED / 1 BATH	683 SF	20
		20

BUILDING 'B' UNITS

UNIT TYPE	NET AREA	COUNT
BUILDING 'B'		
1 BED / 1 BATH	683 SF	22
		22

BUILDING 'C' UNITS

UNIT TYPE	NET AREA	COUNT
BUILDING 'C"		
1 BED / 1 BATH	683 SF	10
1 BED / 1 BATH ADA	683 SF	2
2 BED / 2 BATH	899 SF	12
		24

BUILDING 'D' UNITS

UNIT TYPE	NET AREA	COUNT
BUILDING 'D'		
3 BED / 2 BATH	1,121 SF	10
3 BED / 2 BATH ADA	1,121 SF	2
		12

BUILDING 'E' UNITS

UNIT TYPE	NET AREA	COUNT
BUILDING 'E'		
1 BED / 1 BATH	683 SF	21
1 BED / 1 BATH ADA	683 SF	1
		22

BUILDING 'F' UNITS

UNIT TYPE	NET AREA	COUNT
BUILDING 'F'		
2 BED / 2 BATH	899 SF	12
3 BED / 2 BATH	1,121 SF	12
		24

BUILDING 'G' UNITS

UNIT TYPE	NET AREA	COUNT
BUILDING 'G'		
3 BED / 2 BATH	1,121 SF	12
		12

BUILDING 'H' UNITS

UNIT TYPE	NET AREA	COUNT
BUILDING 'H'		
1 BED / 1 BATH	683 SF	12
2 BED / 1 BATH	868 SF	6
		18

BUILDING 'J' UNITS

UNIT TYPE	NET AREA	COUNT
BUILDING 'J"		
1 BED / 1 BATH	683 SF	12
2 BED / 2 BATH	899 SF	10
2 BED / 2 BATH ADA	899 SF	2
		24

BUILDING 'K' UNITS

UNIT TYPE	NET AREA	COUNT
BUILDING 'K'		
2 BED / 1 BATH	868 SF	20
		20

BUILDING 'L' UNITS

UNIT TYPE	NET AREA	COUNT
BUILDING 'L'		
2 BED / 1 BATH	868 SF	12
2 BED / 2 BATH	899 SF	12
		24

BUILDING 'M' UNITS

UNIT TYPE	NET AREA	COUNT
BUILDING 'M'		
2 BED / 1 BATH	868 SF	12
2 BED / 2 BATH	899 SF	10
2 BED / 2 BATH ADA	899 SF	2
		24

BUILDING 'N' UNITS

UNIT TYPE	NET AREA	COUNT
BUILDING 'N'		
3 BED / 2 BATH	1,121 SF	12
		12

BUILDING 'P' UNITS

UNIT TYPE	NET AREA	COUNT
BUILDING 'P'		
3 BED / 2 BATH	1,121 SF	10
3 BED / 2 BATH ADA	1,121 SF	2
		12

BUILDING 'Q' UNITS

UNIT TYPE	NET AREA	COUNT
BUILDING 'Q'		
1 BED / 1 BATH	683 SF	10
1 BED / 1 BATH ADA	683 SF	2
2 BED / 2 BATH	899 SF	8
		20

R D + A

ROSS DECKMAN & ASSOCIATES INC.
207 FOURTH AVENUE SOUTHEAST,
PUYALLUP, WASHINGTON 98372

PHONE: 253 . 840 . 9405
FAX: 253 . 840 . 9503

8925 REGISTERED ARCHITECT
WILLIAM BOWDISH
STATE OF WASHINGTON

AGENCY REVIEW
09/14/2021

PROJECT
MERIDIAN POINTE APARTMENTS
RESIDENTIAL UNIT REHABILITATION
407 VALLEY AVE. N.E.
PUYALLUP, WA 98372
OVERALL SITE PLAN - PHASE I

#	DESC.	DATE

APPROVAL STAMPS

City of Puyallup
Development & Permitting Services
ISSUED PERMIT

Building	Planning
Engineering	Public Works
Fire	Traffic

JOB NO.:	1922
ISSUE DATE:	09/14/2021
REVISED:	
DRAWN BY:	BM

SHEET
A-100

9/14/2021 9:47:51 AM

P:\1922 Meridian Pointe Apartments\05-Drawings\1922 Meridian Pointe Apartments Units.rvt

PRCTI20220471

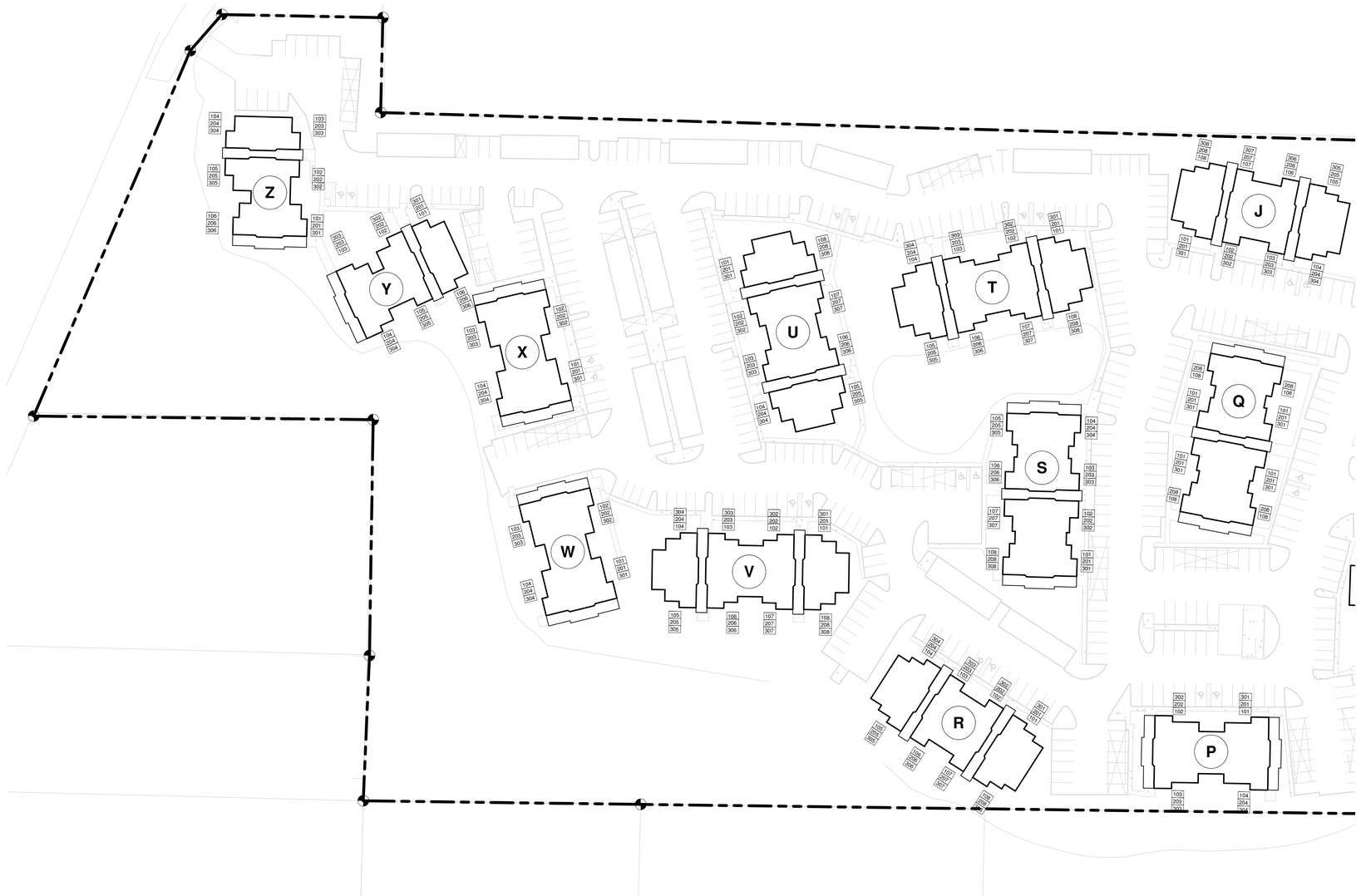

OVERALL SITE PLAN - PHASE II

1" = 50'-0"

NORTH

BUILDING 'J' UNITS

UNIT TYPE	NET AREA	COUNT
BUILDING 'J'		
1 BED / 1 BATH	683 SF	12
2 BED / 2 BATH	899 SF	10
2 BED / 2 BATH ADA	899 SF	2
		24

BUILDING 'P' UNITS

UNIT TYPE	NET AREA	COUNT
BUILDING 'P'		
3 BED / 2 BATH	1,121 SF	10
3 BED / 2 BATH ADA	1,121 SF	2
		12

BUILDING 'Q' UNITS

UNIT TYPE	NET AREA	COUNT
BUILDING 'Q'		
1 BED / 1 BATH	683 SF	10
1 BED / 1 BATH ADA	683 SF	2
2 BED / 2 BATH	899 SF	8
		20

BUILDING 'R' UNITS

UNIT TYPE	NET AREA	COUNT
BUILDING 'R'		
1 BED / 1 BATH	683 SF	10
1 BED / 1 BATH ADA	683 SF	2
2 BED / 2 BATH	899 SF	12
		24

BUILDING 'S' UNITS

UNIT TYPE	NET AREA	COUNT
BUILDING 'S'		
1 BED / 1 BATH	683 SF	11
1 BED / 1 BATH ADA	683 SF	1
2 BED / 2 BATH	899 SF	11
2 BED / 2 BATH ADA	899 SF	1
		24

BUILDING 'T' UNITS

UNIT TYPE	NET AREA	COUNT
BUILDING 'T'		
2 BED / 1 BATH	868 SF	12
2 BED / 2 BATH	899 SF	10
2 BED / 2 BATH ADA	899 SF	2
		24

BUILDING 'U' UNITS

UNIT TYPE	NET AREA	COUNT
BUILDING 'U'		
2 BED / 1 BATH	868 SF	12
2 BED / 2 BATH	899 SF	10
2 BED / 2 BATH ADA	899 SF	2
		24

BUILDING 'V' UNITS

UNIT TYPE	NET AREA	COUNT
BUILDING 'V'		
2 BED / 1 BATH	868 SF	12
2 BED / 2 BATH	899 SF	10
2 BED / 2 BATH ADA	899 SF	2
		24

BUILDING 'W' UNITS

UNIT TYPE	NET AREA	COUNT
BUILDING 'W'		
3 BED / 2 BATH	1,121 SF	12
		12

BUILDING 'X' UNITS

UNIT TYPE	NET AREA	COUNT
BUILDING 'X'		
3 BED / 2 BATH	1,121 SF	11
3 BED / 2 BATH ADA	1,121 SF	1
		12

BUILDING 'Y' UNITS

UNIT TYPE	NET AREA	COUNT
BUILDING 'Y'		
1 BED / 1 BATH	683 SF	12
2 BED / 1 BATH	868 SF	6
		18

BUILDING 'Z' UNITS

UNIT TYPE	NET AREA	COUNT
BUILDING 'Z'		
1 BED / 1 BATH	683 SF	12
2 BED / 1 BATH	868 SF	6
		18

R D + A

ROSS DECKMAN & ASSOCIATES INC.

207 FOURTH AVENUE SOUTHEAST,
PUYALLUP, WASHINGTON 98372

PHONE: 253 . 840 . 9405
FAX: 253 . 840 . 9503

8925 REGISTERED ARCHITECT
WILLIAM BOWDISH
STATE OF WASHINGTON

AGENCY REVIEW
09/14/2021

PROJECT

MERIDIAN POINTE APARTMENTS
RESIDENTIAL UNIT REHABILITATION
407 VALLEY AVE. N.E.
PUYALLUP, WA 98372
OVERALL SITE PLAN - PHASE II

#	DESC.	DATE

APPROVAL STAMPS

City of Puyallup
Development & Permitting Services
ISSUED PERMIT

Building	Planning
Engineering	Public Works
Fire	Traffic

JOB NO.:	1922
ISSUE DATE:	09/14/2021
REVISED:	
DRAWN BY:	BM

SHEET

A-101

9/14/2021 9:47:56 AM

P:\1922 Meridian Pointe Apartments\05-Drawings\1922 Meridian Pointe Apartments Units.rvt

PRCTI20220471

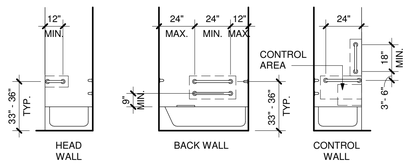

GRAB BARS:
INSTALL GRAB BARS 33" MIN & 36" MAX AFF. GRAB BARS SHALL COMPLY WITH AND MEET THE STRUCTURAL STRENGTH REQUIREMENTS OF *ANSI SEC.609.8.* LOCATE GRAB BARS PER *ANSI SEC. 607.4.2.*

SEAT:
A REMOVABLE SEAT IS NOT REQUIRED PER *ANSI SEC. 1003.11.2.5.1 EX.1.*

CONTROLS:
607.5 CONTROLS, OTHER THAN DRAIN STOPPERS, SHALL BE PROVIDED ON AN END WALL, LOCATED BETWEEN THE BATHTUB RIM AND GRAB BAR, AND BETWEEN THE OPEN SIDE OF THE BATHTUB AND THE CENTERLINE OF THE WIDTH OF THE BATHTUB. CONTROLS SHALL COMPLY WIT SECTION 309.4. THE ADJUSTABLE HEIGHT HAND SHOWER SHALL INCLUDE A 59" MIN LONG HOSE AND COMPLY WITH *ANSI SEC. 607.6.* CONTROLS SHALL NOT OBSTRUCT THE USE OF GRAB BARS.

1 BATHTUB REQUIREMENTS
1/4" = 1'-0"

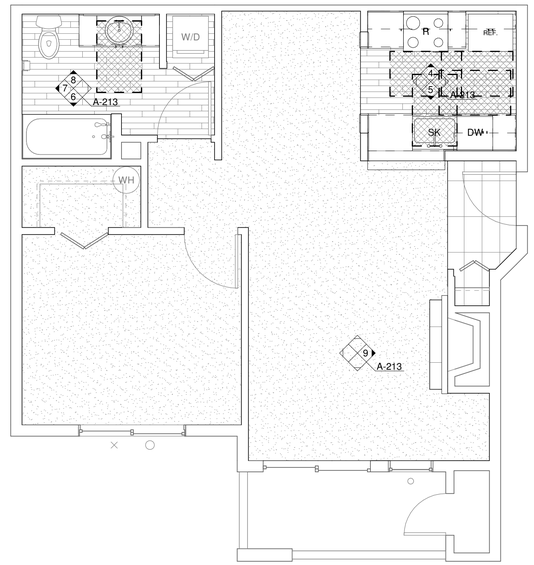

2 ENLARGED UNIT PLAN - 1 BED/1 BATH (ADA)
1/4" = 1'-0"

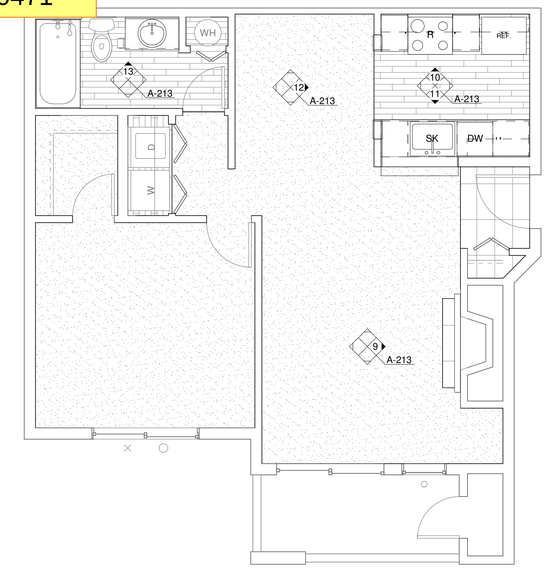

3 ENLARGED UNIT PLAN - 1 BED/1 BATH (TYP)
1/4" = 1'-0"

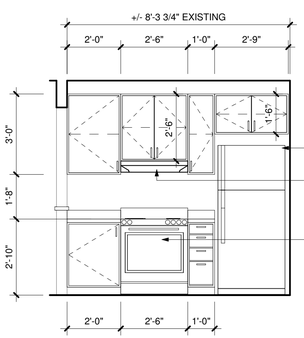

4 KITCHEN (ADA)
3/8" = 1'-0"

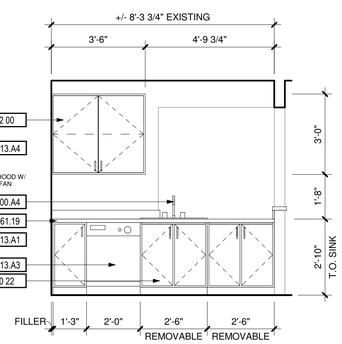

5 KITCHEN (ADA)
3/8" = 1'-0"

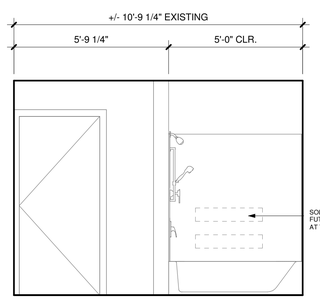

6 BATHROOM (ADA)
3/8" = 1'-0"

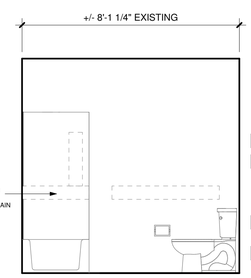

7 BATHROOM (ADA)
3/8" = 1'-0"

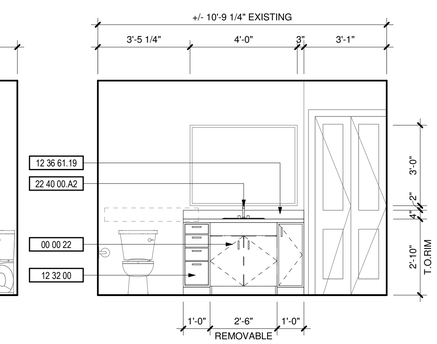

8 BATHROOM (ADA)
3/8" = 1'-0"

DEMOLITION NOTES

#	DESCRIPTION
1	REPLACE ALL EXISTING FLOORING & BASE AND FIREPLACE HEARTH. PREP FOR NEW FINISH AS REQUIRED
2	DEMO ALL EXISTING UPPER & LOWER CABINETS AND PLUMBING FIXTURE AT KITCHEN. ALL EXISTING APPLIANCES TO BE REMOVED. PREP WALL AND FLOOR FOR NEW FINISHES
3	REPLACE EXISTING LIGHT FIXTURES. PREP FOR NEW FIXTURE AS REQUIRED.
4	DEMO ALL EXISTING LOWER CABINET, PLUMBING FIXTURE & MIRROR. PREP FOR NEW FINISHES AS REQUIRED.
5	DEMO HALF WALL AND EXISTING COUNTER TO ACCOMMODATE NEW COUNTER,
6	MEDICINE CABINET TO BE REMOVED AND REPLACED BY OWNER.
7	DEMO EXISTING MANTLE & FIRE PLACE TILE SURROUND. PREP FOR NEW FINISHES. SEE FIREPLACE ELEVATION FOR DETAILS.
8	REMOVE EXISTING COUNTERSHELF AT LIVING ROOM. PATCH & REPAIR WALL AS REQUIRED FOR NEW FINISHES.
9	REPLACE EXISTING SHOWER HEAD, SHOWER CONTROL KNOB, VALVE, AND ASSOCIATED RISER PIPING.
10	SEE DETAIL 1/A-213 FOR BATHTUB CONTROL AND GRAB BAR LOCATIONS FOR BATHROOMS.

KEYNOTES

#	DESCRIPTION
00 00 22	REMOVABLE CABINET, EXTEND FLOORING TO WALL AT BACK OF EACH REMOVABLE CABINET
09 30 13	CERAMIC TILING
11 30 13.A1	RANGE
11 30 13.A3	DISHWASHER
11 30 13.A4	REFRIGERATOR
12 32 00	MANUFACTURED WOOD CASEWORK
12 36 61.19	QUARTZ AGGLOMERATE COUNTERTOPS
22 40 00.A2	LAVATORY/FAUCET
22 40 00.A4	UNDER COUNTER SINK/FAUCET

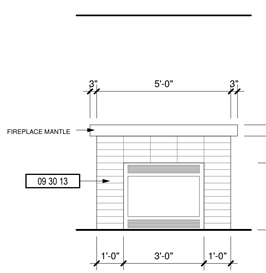

9 FIREPLACE
3/8" = 1'-0"

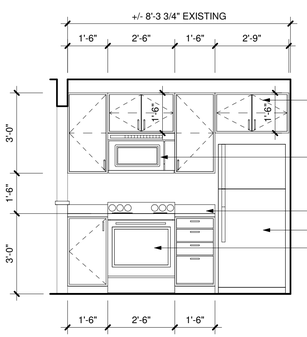

10 KITCHEN
3/8" = 1'-0"

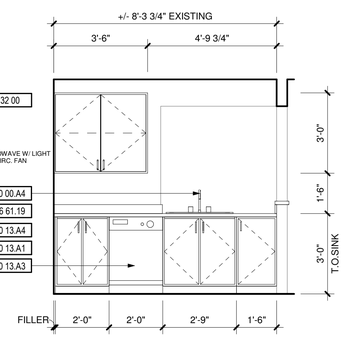

11 KITCHEN
3/8" = 1'-0"

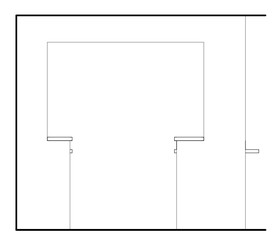

12 DINING ROOM
3/8" = 1'-0"

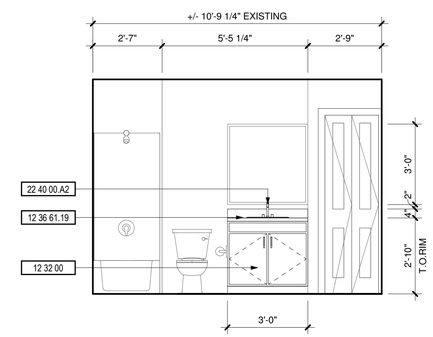

13 BATHROOM
3/8" = 1'-0"

R D + A
ROSS DECKMAN & ASSOCIATES INC.
207 FOURTH AVENUE SOUTHEAST,
PUYALLUP, WASHINGTON 98372
PHONE: 253 . 840 . 9405
FAX: 253 . 840 . 9503
8925 REGISTERED ARCHITECT
WILLIAM BOWDISH
STATE OF WASHINGTON

AGENCY REVIEW
09/14/2021

PROJECT
MERIDIAN POINTE APARTMENTS
RESIDENTIAL UNIT REHABILITATION
407 VALLEY AVE. N.E.
PUYALLUP, WA 98372
ENLARGED UNIT PLAN - 1 BED/1 BATH

#	DESC.	DATE

APPROVAL STAMPS

City of Puyallup
Development & Permitting Services
ISSUED PERMIT
Building | Planning
Engineering | Public Works
Fire | Traffic

JOB NO.:	1922
ISSUE DATE:	09/14/2021
REVISED:	
DRAWN BY:	BM
SHEET	A-213

9/14/2021 9:48:01 AM

P:\1922 Meridian Pointe Apartments\05-Drawings\1922 Meridian Pointe Apartments Units.rvt

PRCTI20220471

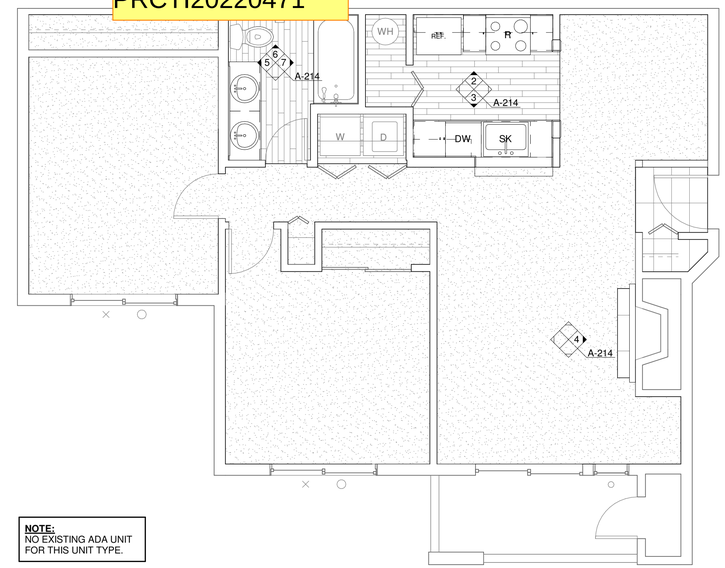

NOTE:
NO EXISTING ADA UNIT FOR THIS UNIT TYPE.

1 ENLARGED UNIT PLAN - 2 BED/1 BATH (TYP)
1/4" = 1'-0"

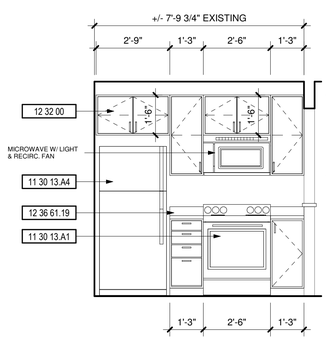

2 KITCHEN
3/8" = 1'-0"

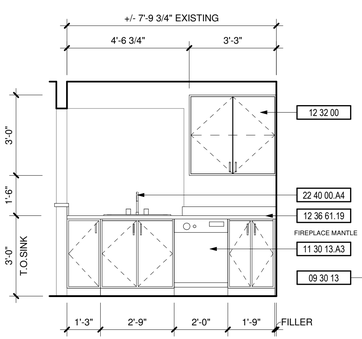

3 KITCHEN
3/8" = 1'-0"

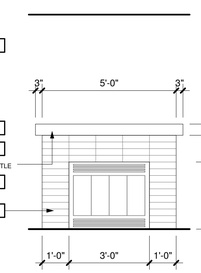

4 FIREPLACE
3/8" = 1'-0"

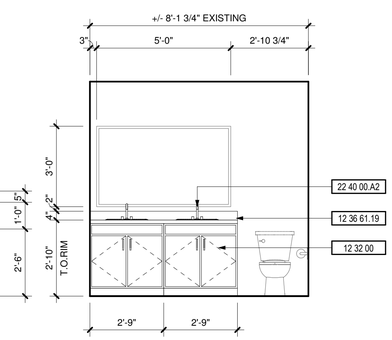

5 BATHROOM
3/8" = 1'-0"

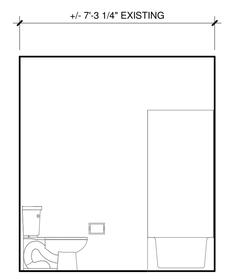

6 BATHROOM
3/8" = 1'-0"

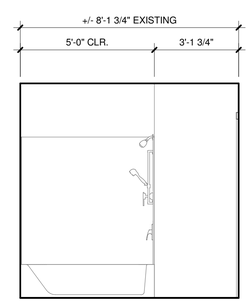

7 BATHROOM
3/8" = 1'-0"

DEMOLITION NOTES

#	DESCRIPTION
1	REPLACE ALL EXISTING FLOORING & BASE AND FIREPLACE HEARTH. PREP FOR NEW FINISH AS REQUIRED
2	DEMO ALL EXISTING UPPER & LOWER CABINETS AND PLUMBING FIXTURE AT KITCHEN. ALL EXISTING APPLIANCES TO BE REMOVED. PREP WALL AND FLOOR FOR NEW FINISHES
3	REPLACE EXISTING LIGHT FIXTURES. PREP FOR NEW FIXTURE AS REQUIRED.
4	DEMO ALL EXISTING LOWER CABINET, PLUMBING FIXTURE & MIRROR. PREP FOR NEW FINISHES AS REQUIRED.
5	DEMO HALF WALL AND EXISTING COUNTER TO ACCOMMODATE NEW COUNTER,
6	MEDICINE CABINET TO BE REMOVED AND REPLACED BY OWNER.
7	DEMO EXISTING MANTLE & FIRE PLACE TILE SURROUND. PREP FOR NEW FINISHES. SEE FIREPLACE ELEVATION FOR DETAILS.
8	REMOVE EXISTING COUNTERSHELF AT LIVING ROOM. PATCH & REPAIR WALL AS REQUIRED FOR NEW FINISHES.
9	REPLACE EXISTING SHOWER HEAD, SHOWER CONTROL KNOB, VALVE, AND ASSOCIATED RISER PIPING.
10	SEE DETAIL 1/A-213 FOR BATHTUB CONTROL AND GRAB BAR LOCATIONS FOR BATHROOMS.

KEYNOTES

#	DESCRIPTION
09 30 13	CERAMIC TILING
11 30 13.A1	RANGE
11 30 13.A3	DISHWASHER
11 30 13.A4	REFRIGERATOR
12 32 00	MANUFACTURED WOOD CASEWORK
12 36 61.19	QUARTZ AGGLOMERATE COUNTERTOPS
22 40 00.A2	LAVATORY/FAUCET
22 40 00.A4	UNDER COUNTER SINK/FAUCET

R D + A
ROSS DECKMAN & ASSOCIATES INC.
207 FOURTH AVENUE SOUTHEAST,
PUYALLUP, WASHINGTON 98372
PHONE: 253 . 840 . 9405
FAX: 253 . 840 . 9503

8925 REGISTERED ARCHITECT
WILLIAM BOWDISH
STATE OF WASHINGTON

AGENCY REVIEW
09/14/2021

PROJECT
MERIDIAN POINTE APARTMENTS
RESIDENTIAL UNIT REHABILITATION
407 VALLEY AVE. N.E.
PUYALLUP, WA 98372
ENLARGED UNIT PLAN - 2 BED/1 BATH

#	DESC.	DATE

APPROVAL STAMPS

City of Puyallup
Development & Permitting Services
ISSUED PERMIT
Building | Planning
Engineering | Public Works
Fire | Traffic

JOB NO.:	1922
ISSUE DATE:	09/14/2021
REVISED:	
DRAWN BY:	BM
SHEET	

A-214

9/14/2021 9:48:04 AM

P:\1922 Meridian Pointe Apartments\05-Drawings\1922 Meridian Pointe Apartments Units.rvt

PRCTI20220471

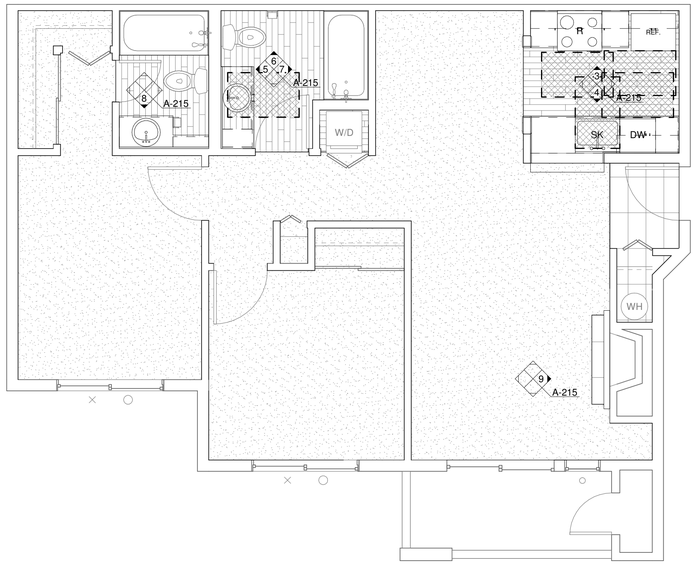

1 **ENLARGED UNIT PLAN - 2 BED/2 BATH (ADA)**
1/4" = 1'-0"

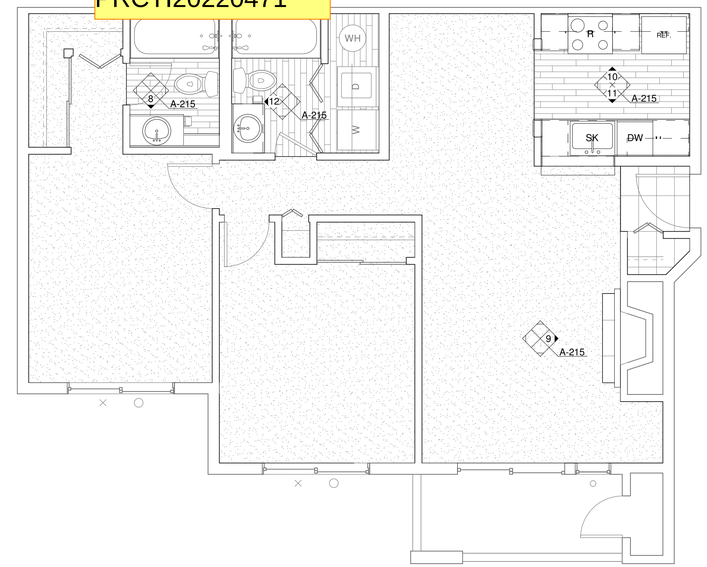

2 **ENLARGED UNIT PLAN - 2 BED/2 BATH (TYP)**
1/4" = 1'-0"

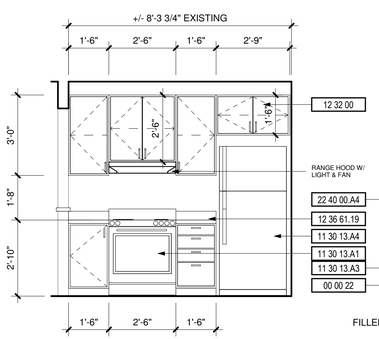

3 KITCHEN (ADA)
3/8" = 1'-0"

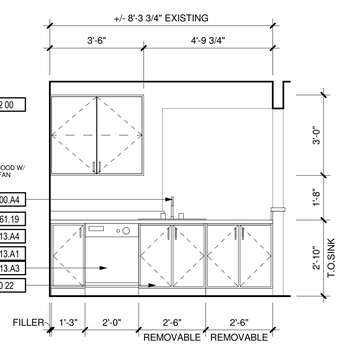

4 KITCHEN (ADA)
3/8" = 1'-0"

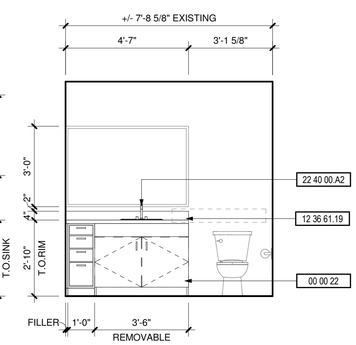

5 BATHROOM (ADA)
3/8" = 1'-0"

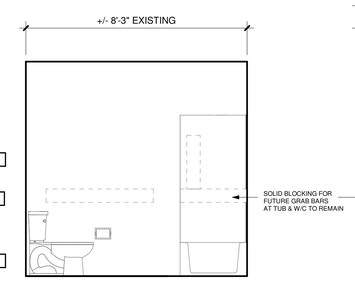

6 BATHROOM (ADA)
3/8" = 1'-0"

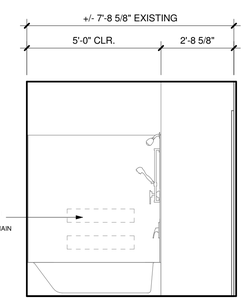

7 BATHROOM (ADA)
3/8" = 1'-0"

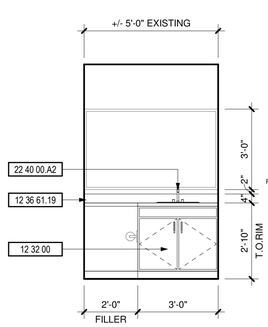

8 BATHROOM
3/8" = 1'-0"

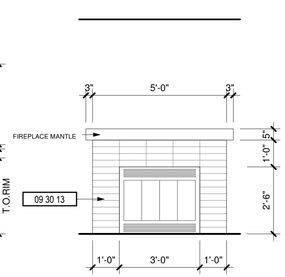

9 FIREPLACE
3/8" = 1'-0"

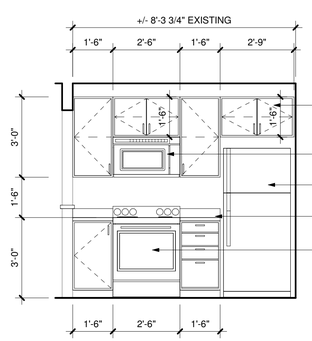

10 KITCHEN
3/8" = 1'-0"

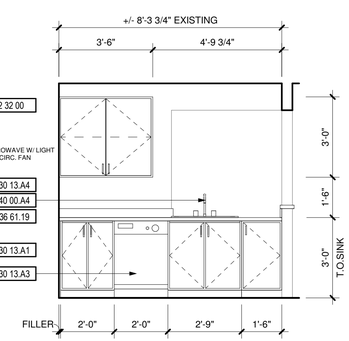

11 KITCHEN
3/8" = 1'-0"

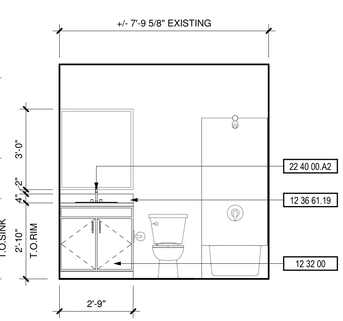

12 BATHROOM
3/8" = 1'-0"

DEMOLITION NOTES

#	DESCRIPTION
1	REPLACE ALL EXISTING FLOORING & BASE AND FIREPLACE HEARTH. PREP FOR NEW FINISH AS REQUIRED
2	DEMO ALL EXISTING UPPER & LOWER CABINETS AND PLUMBING FIXTURE AT KITCHEN. ALL EXISTING APPLIANCES TO BE REMOVED. PREP WALL AND FLOOR FOR NEW FINISHES
3	REPLACE EXISTING LIGHT FIXTURES. PREP FOR NEW FIXTURE AS REQUIRED.
4	DEMO ALL EXISTING LOWER CABINET, PLUMBING FIXTURE & MIRROR. PREP FOR NEW FINISHES AS REQUIRED.
5	DEMO HALF WALL AND EXISTING COUNTER TO ACCOMMODATE NEW COUNTER,
6	MEDICINE CABINET TO BE REMOVED AND REPLACED BY OWNER.
7	DEMO EXISTING MANTLE & FIRE PLACE TILE SURROUND. PREP FOR NEW FINISHES. SEE FIREPLACE ELEVATION FOR DETAILS.
8	REMOVE EXISTING COUNTERSHELF AT LIVING ROOM. PATCH & REPAIR WALL AS REQUIRED FOR NEW FINISHES.
9	REPLACE EXISTING SHOWER HEAD, SHOWER CONTROL KNOB, VALVE, AND ASSOCIATED RISER PIPING.
10	SEE DETAIL 1/A-213 FOR BATHTUB CONTROL AND GRAB BAR LOCATIONS FOR BATHROOMS.

KEYNOTES

#	DESCRIPTION
00 00 22	REMOVABLE CABINET, EXTEND FLOORING TO WALL AT BACK OF EACH REMOVABLE CABINET
09 30 13	CERAMIC TILING
11 30 13.A1	RANGE
11 30 13.A3	DISHWASHER
11 30 13.A4	REFRIGERATOR
12 32 00	MANUFACTURED WOOD CASEWORK
12 36 61.19	QUARTZ AGGLOMERATE COUNTERTOPS
22 40 00.A2	LAVATORY/FAUCET
22 40 00.A4	UNDER COUNTER SINK/FAUCET

R D + A
ROSS DECKMAN & ASSOCIATES INC.
207 FOURTH AVENUE SOUTHEAST,
PUYALLUP, WASHINGTON 98372
PHONE: 253 . 840 . 9405
FAX: 253 . 840 . 9503

8925 REGISTERED ARCHITECT
WILLIAM BOWDISH
STATE OF WASHINGTON

AGENCY REVIEW
09/14/2021

PROJECT
MERIDIAN POINTE APARTMENTS
RESIDENTIAL UNIT REHABILITATION
407 VALLEY AVE. N.E.
PUYALLUP, WA 98372
ENLARGED UNIT PLAN - 2 BED/2 BATH

#	DESC.	DATE

APPROVAL STAMPS

City of Puyallup
Development & Permitting Services
ISSUED PERMIT
Building | Planning
Engineering | Public Works
Fire | Traffic

JOB NO.:	1922
ISSUE DATE:	09/14/2021
REVISED:	
DRAWN BY:	BM
SHEET	

A-215

9/14/2021 9:48:09 AM

P:\1922 Meridian Pointe Apartments\05-Drawings\1922 Meridian Pointe Apartments Units.rvt

PRCTI20220471

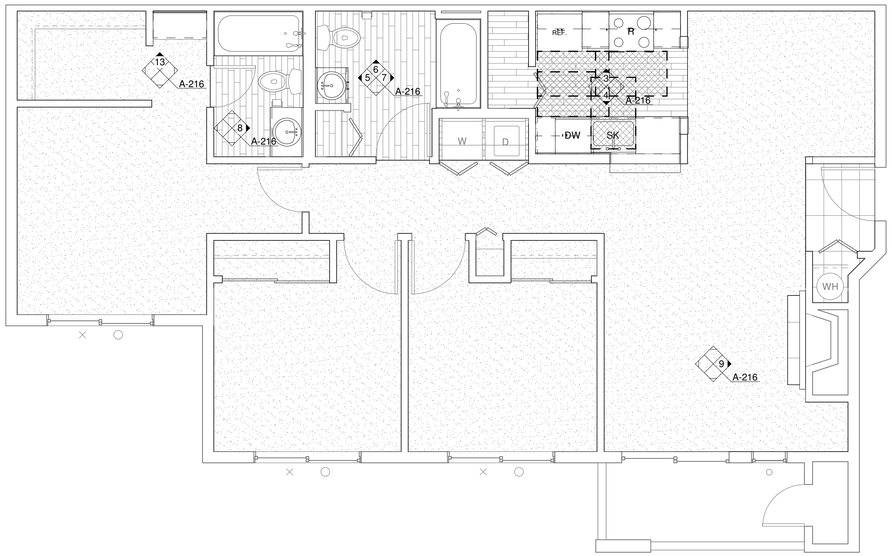

1 ENLARGED UNIT PLAN - 3 BED/2 BATH (ADA)
1/4" = 1'-0"

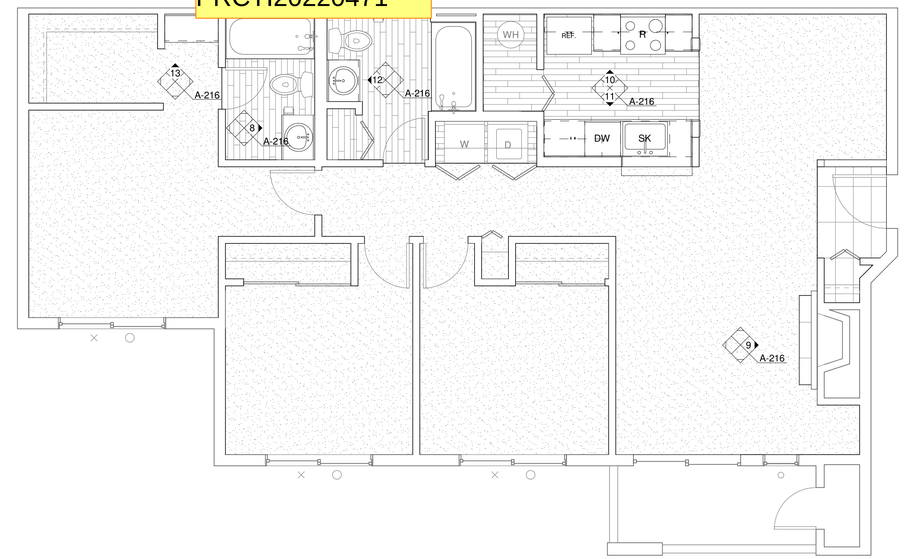

2 ENLARGED UNIT PLAN - 3 BED/2 BATH (TYP)
1/4" = 1'-0"

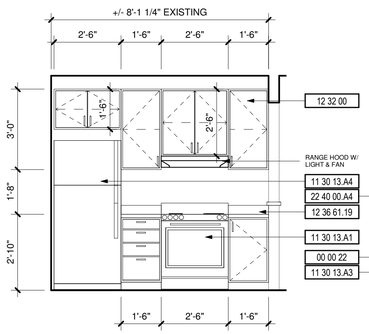

3 KITCHEN (ADA)
3/8" = 1'-0"

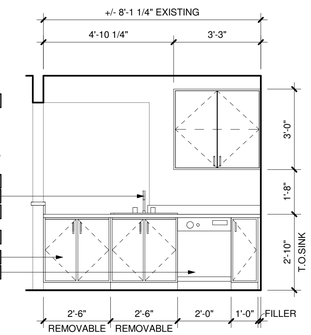

4 KITCHEN (ADA)
3/8" = 1'-0"

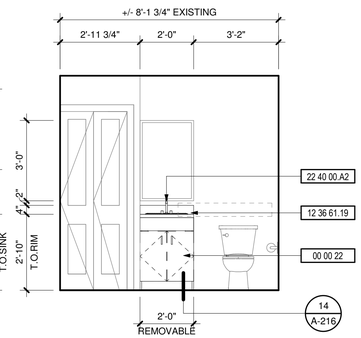

5 BATHROOM (ADA)
3/8" = 1'-0"

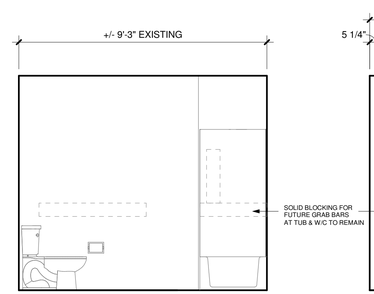

6 BATHROOM (ADA)
3/8" = 1'-0"

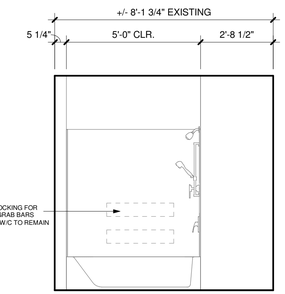

7 BATHROOM (ADA)
3/8" = 1'-0"

DEMOLITION NOTES

#	DESCRIPTION
1	REPLACE ALL EXISTING FLOORING & BASE AND FIREPLACE HEARTH. PREP FOR NEW FINISH AS REQUIRED
2	DEMO ALL EXISTING UPPER & LOWER CABINETS AND PLUMBING FIXTURE AT KITCHEN. ALL EXISTING APPLIANCES TO BE REMOVED. PREP WALL AND FLOOR FOR NEW FINISHES
3	REPLACE EXISTING LIGHT FIXTURES. PREP FOR NEW FIXTURE AS REQUIRED.
4	DEMO ALL EXISTING LOWER CABINET, PLUMBING FIXTURE & MIRROR. PREP FOR NEW FINISHES AS REQUIRED.
5	DEMO HALF WALL AND EXISTING COUNTER TO ACCOMMODATE NEW COUNTER.
6	MEDICINE CABINET TO BE REMOVED AND REPLACED BY OWNER.
7	DEMO EXISTING MANTLE & FIRE PLACE TILE SURROUND. PREP FOR NEW FINISHES. SEE FIREPLACE ELEVATION FOR DETAILS.
8	REMOVE EXISTING COUNTERSHELF AT LIVING ROOM. PATCH & REPAIR WALL AS REQUIRED FOR NEW FINISHES.
9	REPLACE EXISTING SHOWER HEAD, SHOWER CONTROL KNOB, VALVE, AND ASSOCIATED RISER PIPING.
10	SEE DETAIL 1/A-213 FOR BATHTUB CONTROL AND GRAB BAR LOCATIONS FOR BATHROOMS.

KEYNOTES

#	DESCRIPTION
00 00 22	REMOVABLE CABINET, EXTEND FLOORING TO WALL AT BACK OF EACH REMOVABLE CABINET
09 30 13	CERAMIC TILING
11 30 13.A1	RANGE
11 30 13.A3	DISHWASHER
11 30 13.A4	REFRIGERATOR
12 32 00	MANUFACTURED WOOD CASEWORK
12 36 61.19	QUARTZ AGGLOMERATE COUNTERTOPS
22 40 00.A2	LAVATORY/FAUCET
22 40 00.A4	UNDER COUNTER SINK/FAUCET

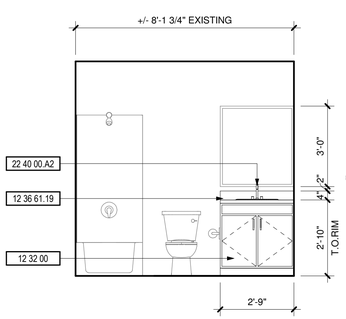

8 BATHROOM
3/8" = 1'-0"

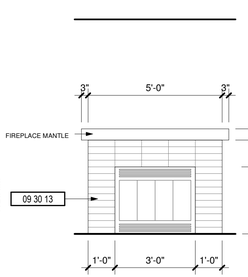

9 FIREPLACE
3/8" = 1'-0"

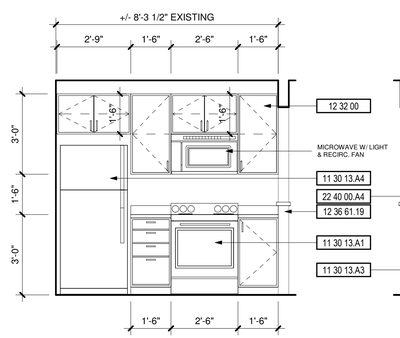

10 KITCHEN
3/8" = 1'-0"

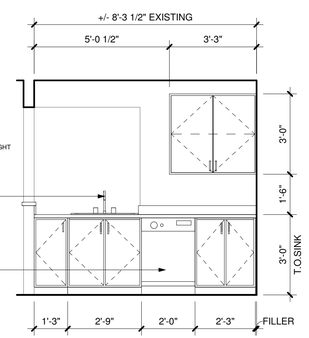

11 KITCHEN
3/8" = 1'-0"

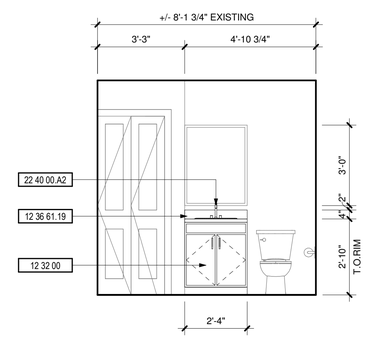

12 BATHROOM
3/8" = 1'-0"

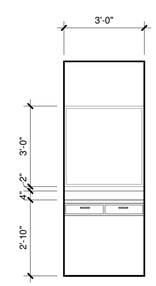

13 VANITY
3/8" = 1'-0"

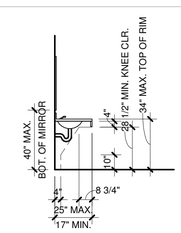

SIDE ELEVATION

CABINET: COMPLETELY REMOVABLE; SLIDES IN AND OUT UNDER FIXED RAILS. BACK TOP RAIL CUT OUT ON SITE.

EXPOSED PIPES & SURFACES: UNDER SINKS WATER & DRAIN PIPES SHALL BE INSULATED AND THERE SHALL BE NO SHARP OR ABRASIVE SURFACES PER *ANSI SEC. 606.6.*

CONTROLS:
ALL PARTS SHALL BE OPERABLE w/ ONE HAND AND MEET THE REQUIREMENTS OF *ANSI SEC. 309.*

14 BATH LAVATORY
1/4" = 1'-0"

R D + A

ROSS DECKMAN & ASSOCIATES INC.
207 FOURTH AVENUE SOUTHEAST,
PUYALLUP, WASHINGTON 98372

PHONE: 253 . 840 . 9405
FAX: 253 . 840 . 9503

8925 REGISTERED ARCHITECT
WILLIAM BOWDISH
STATE OF WASHINGTON

AGENCY REVIEW
09/14/2021

PROJECT
MERIDIAN POINTE APARTMENTS
RESIDENTIAL UNIT REHABILITATION
407 VALLEY AVE. N.E.
PUYALLUP, WA 98372
ENLARGED UNIT PLAN - 3 BED/2 BATH

#	DESC.	DATE

APPROVAL STAMPS

City of Puyallup
Development & Permitting Services
ISSUED PERMIT
Building | Planning
Engineering | Public Works
Fire | Traffic

JOB NO.:	1922
ISSUE DATE:	09/14/2021
REVISED:	
DRAWN BY:	BM
SHEET	A-216

9/14/2021 9:48:14 AM

P:\1922 Meridian Pointe Apartments\05-Drawings\1922 Meridian Pointe Apartments Units.rvt