Approval of submitted plans is not an approval of omissions or oversight by this office or noncompliance with any applicable regulations of local government. The contractor is responsible for making sure that the building complies with all applicable building codes and regulations of the local government.

City of Puyallup
Development & Permitting Services
ISSUED PERMIT
Building | Planning
Engineering | Public Works
Fire | Traffic

LIFE SCIENCE LOGISTICS

302 33RD ST. SE
PUYALLUP, WA 98372

STORAGE RACK INSTALLATION

APPROVED PLAN
CITY OF PUYALLUP
PLANNING DIVISION
APPROVED BY: Chris BEALE
DATE: 04/08/2022
CASE NO. PRCTI20220562
CONDITIONS:

ENGINEER

SAL FATEEN
SEIZMIC ENGINEERING, INC.
1130 E. CYPRESS STREET
COVINA, CA. 91724
C/O: TA CHING CHANG
TEL: (909) 869-0989 x123
TCHANG@SEIZMICINC.COM

PROJECT CONTACTS

DEBBIE DOLAN
PERMIT COORDINATOR
SUBMITTAL SERVICES, INC.
1130 E. CYPRESS STREET
COVINA, CA. 91724
TEL: (909)869-0989 x114
DEBBIE@SUBMITTALSERVICES.COM

ALTERNATE CONTACT:
SAVANNAH GARCIA
TEL:(909) 869-0989 x159
SOS@SUBMITTALSERVICES.COM

CONTRACTOR

MIGUEL SUAREZ
USA RACK INSTALLATIONS
TEL: (732)575-2824

CODE USED IN DESIGN

DESIGNED PER SECTION 2209 OF THE 2018 IBC

Fa = 1.0 & Ss = 1.25

BUILDING DATA

BLDG SQ FT: **505,120**

CONSTRUCTION TYPE: **III-B**

OCCUPANCY TYPE: **S-1**

FULLY SPRINKLERED: **YES**

THE APPROVED CONSTRUCTION PLANS AND ALL ENGINEERING MUST BE POSTED ON THE JOB AT ALL INSPECTIONS IN A VISIBLE AND READILY ACCESSIBLE LOCATION.

FULL SIZED LEDGIBLE COLOR PLANS ARE REQUIRED TO BE PROVIDE BY THE PERMITTEE ON SITE FOR ALL INSPECTIONS MIN. PLAN SIZE 24 X 36

SCOPE OF WORK

INSTALLATION OF STORAGE RACKS

IN AN EXISTING BUILDING

PROJECT SQ FT: **60,090**

NOTE: ADDING STORAGE RACK THAT IS ALREADY PERMITTED UNDER B-21-0335

City of Puyallup
Building
REVIEWED FOR COMPLIANCE
DLeahy
04/19/2022
6:23:36 AM

City of Puyallup
Development Engineering
APPROVED
See permit for additional requirements.
Linda Lian
04/22/2022
8:08:31 AM

SCHEDULE OF DOCUMENTS

TABLE OF CONTENTS

ADDRESS:
LIFE SCIENCE LOGISTICS
302 33RD ST. SE
PUYALLUP, WA 98372

REV.	DATE	BY	DESCRIPTION

SUBMITTAL SERVICES
1130 E. Cypress St.
Covina, CA 91724
909.869.0989

DRAWN BY:	D.D.
DATE:	03-07-22
LAST REV. BY:	
REV. DATE:	
TYPE:	
SCALE:	N.T.S.
APRVD BY:	SAL E. FATEEN

SAL E. FATEEN
STATE OF WASHINGTON
40955
REGISTERED
PROFESSIONAL ENGINEER
EXPIRES
04-12-2022

DESCRIPTION:
TABLE OF CONTENTS

DRAWING NUMBER:
22-0685

PRCTI20220562

ABBREVIATIONS

A.F.F.	= ABOVE FINISHED FLOOR
AVG.	= AVERAGE
B/B	= BACK TO BACK
BLDG.	= BUILDING
B.O.M.	= BILL OF MATERIAL
B.P.	= BASE PLATE
C/C	= CENTER TO CENTER
C/F	= CENTER TO FACE
CLR.	= CLEAR
CONC.	= CONCRETE
DET.	= DETAIL
DIA.	= DIAMETER
DBL.	= DOUBLE
DWG.	= DRAWING
E.P.	= END PLATE
EXT.	= EXTERIOR
F.P.	= FOOT PLATE
F/F	= FACE TO FACE
F/W	= FACE TO WALL
GA.	= GAUGE OR GAGE
GALV.	= GALVANIZE(D)
HEX.	= HEXAGON
I.D.	= INSIDE DIAMETER
INT.	= INTERIOR
LB	= POUNDS
L.H.	= LEFT HAND
L/L	= LEVEL TO LEVEL
MAX.	= MAXIMUM
MIN.	= MINIMUM
MTG.	= MOUNTING
MISC.	= MISCELLANEOUS
NO.	= NUMBER
NOM.	= NOMINAL
N.T.S.	= NOT TO SCALE
O.D.	= OUTSIDE DIAMETER
O.C.	= ON CENTER
OPN'G	= OPENING
OPP. HAND	= OPPOSITE HAND
OA	= OVERALL
PSI	
PSF	
PLF	= POUNDS PER LINEAR FOOT
__/LEVEL	= __ PER LEVEL
QTY.	= QUANTITY
R.H.	= RIGHT HAND
REF.	= REFERENCE
REQ'D	= REQUIRED
REINF.	= REINFORCED
RET.	= RETURN
SLOT.	= SLOTTED
STR.	= STRUCTURAL
SIM.	= SIMILAR
SQ.	= SQUARE
T & G	= TONGUE & GROOVE
T.O.B.	= TOP OF BEAM
T.O.B.	= TOP OF BELT
T.O.D.	= TOP OF DECK
T.O.R.	= TOP OF ROLLER
T.O.S.	= TOP OF SUPPORT
TYP.	= TYPICAL
U.N.	= UNLESS NOTED
T/__	= TOP OF __
UNREIN.	= UNREINFORCED

City of Puyallup
Development & Permitting Services
ISSUED PERMIT

Building	Planning
Engineering	Public Works
Fire	Traffic

PALLET RACK PLANS
LIFESCIENCE LOGISTICS
302 33RD ST. SE
PUYALLUP, WA 98372

VICINITY MAP

SITE MAP

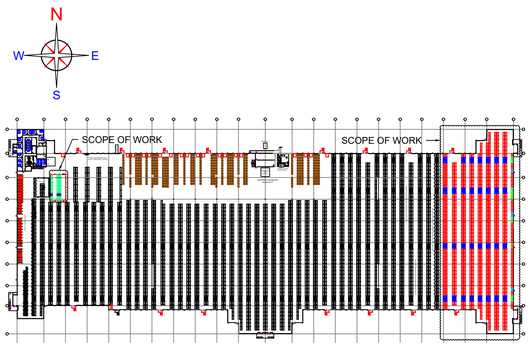

OWNER / DEVELOPER

INDEX OF SHEETS

LINE	SHEET NO.	DESCRIPTION
1	Z1	COVER SHEET
2	L1	FACILITY LAYOUT INSTALL
3	L2	EGRESS LAYOUT
4	L3	RACK LAYOUT INSTALL
5	L4	DEA CAGE RACK INSTALL
6	E3	RACK ELEVATIONS INSTALL
7		
8		
9		
10		
11		
12		
13		
14		
15		
16		
17		
18		
19		
20		
21		
22		
23		
24		
25		
26		
27		
28		
29		
30		
31		

CODE SUMMARY

Per RMI/ANSI MH1 6.1-2008
Specification for the
Design, Testing and Utilization
of Steel Storage Racks

SAL E. FATEEN
STATE OF WASHINGTON
REGISTERED
PROFESSIONAL ENGINEER
EXPIRES
04-12-2022

REV #	DATE	DESCRIPTION
16	10/12/21	proposed dea cage expansion
15	10/1/21	as built
14	8/19/21	proposed dea cage expansion
13	7/21/21	install
12	6/28/21	Move cage, relocate rack.
11	6/25/21	relocate rack
10	5/21/21	rev layout
9	4/13/21	rev pallet stop counts
8	4/13/21	add egress
7	4/12/21	add pallet stops
6	4/9/21	rev layout
18	1/25/22	phase 2 pe drawings
17	11/4/21	rev row spacers

SCALE:	CALENDAR:	
	PH	
DATE: 1/25/22	DRAWN BY: ROS	SHEET: Z1

LifeScience Logistics
302 33rd Street SE, Puyallup, WA 98372

Cover Sheet

DRAWING #: 20186-000296-18

MALIN™
A RAYMOND COMPANY

PRCT120220562

City of Puyallup
Development & Permitting Services
ISSUED PERMIT

Building	Planning
Engineering	Public Works
Fire	Traffic

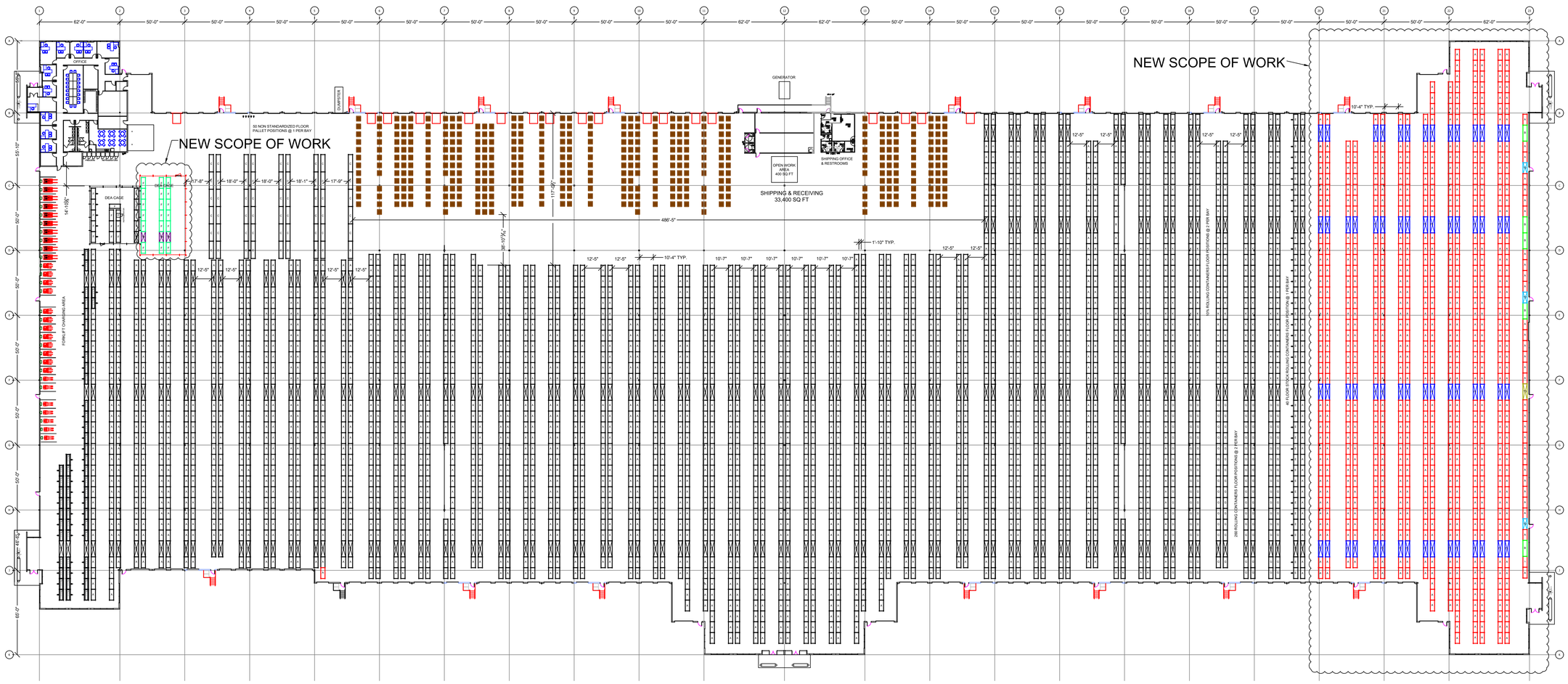

All rack to be inspected for damage prior to installation. Any damaged components, i.e. frames with bent or damaged uprights, bent or missing bracing, damaged beams, etc., are to be separated and not installed without prior approval from the engineer.

REV #	DATE	DESCRIPTION
16	10/12/21	proposed dea cage expansion
15	10/1/21	as built
14	8/19/21	proposed dea cage expansion
13	7/21/21	install
12	6/28/21	Move cage, relocate rack.
11	6/25/21	relocate rack
10	5/21/21	rev layout
9	4/13/21	rev pallet stop counts
8	4/13/21	add egress
7	4/12/21	add pallet stops
6	4/9/21	rev layout
18	1/25/22	phase 2 pe drawings
17	11/4/21	rev row spacers

SCALE	CALCULATED BY	
nts	PH	
DATE	DRAWN BY	SHEET #
1/25/22	ROS	L1

SAL E. FATEEN
STATE OF WASHINGTON
52935
REGISTERED
PROFESSIONAL ENGINEER

EXPIRES
04-12-2022

LifeSCience Logistics
302 33rd Street SE, Puyallup, WA 98372

Facility Layout
Phase 2 Install

DRAWING #
20186-000296-18

MALIN™
A RAYMOND COMPANY

PRCTI20220562

City of Puyallup
Development & Permitting Services
ISSUED PERMIT

Building	Planning
Engineering	Public Works
Fire	Traffic

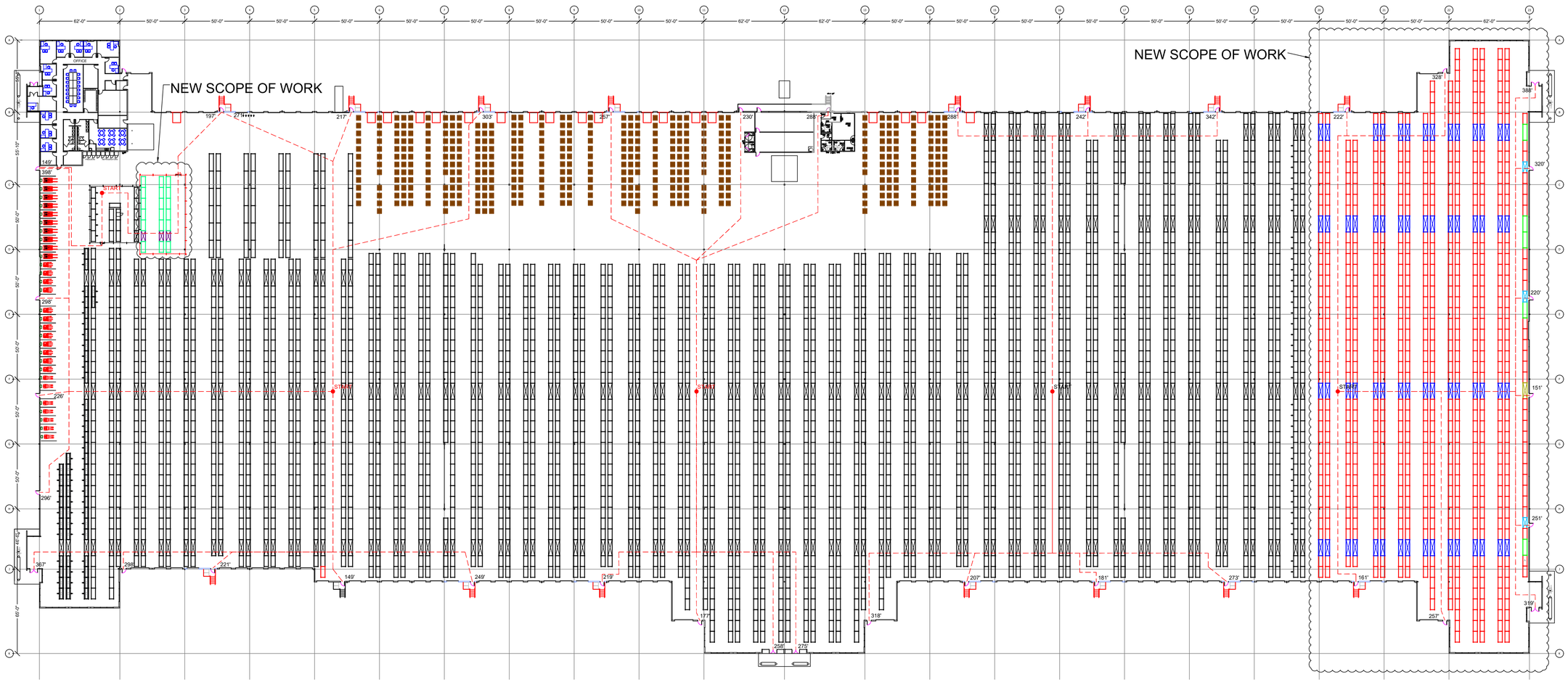

All rack to be inspected for damage prior to installation. Any damaged components, i.e. frames with bent or damaged uprights, bent or missing bracing, damaged beams, etc., are to be separated and not installed without prior approval from the engineer.

REV #	DATE	DESCRIPTION
16	10/12/21	proposed dea cage expansion
15	10/1/21	as built
14	8/19/21	proposed dea cage expansion
13	7/21/21	install
12	6/28/21	Move cage, relocate rack.
11	6/25/21	relocate rack
10	5/21/21	rev layout
9	4/13/21	rev pallet stop counts
8	4/13/21	add egress
7	4/12/21	add pallet stops
6	4/9/21	rev layout
18	1/25/22	phase 2 pe drawings
17	11/4/21	rev row spacers

:EGRESS PATH
:START

SCALE	DRAWN BY	
nts	PH	
DATE	DRAWN BY	SHEET #
1/25/22	ROS	L2

SAL E. FATEEN
STATE OF WASHINGTON
52915
REGISTERED
PROFESSIONAL ENGINEER
EXPIRES
04-12-2022

LifeSCIENCE Logistics
302 33rd Street SE, Puyallup, WA 98372

Egress Layout

DRAWING #
20186-000296-18

MALIN™
A RAYMOND COMPANY

PRCTI20220562

City of Puyallup
Development & Permitting Services
ISSUED PERMIT

Building	Planning
Engineering	Public Works
Fire	Traffic

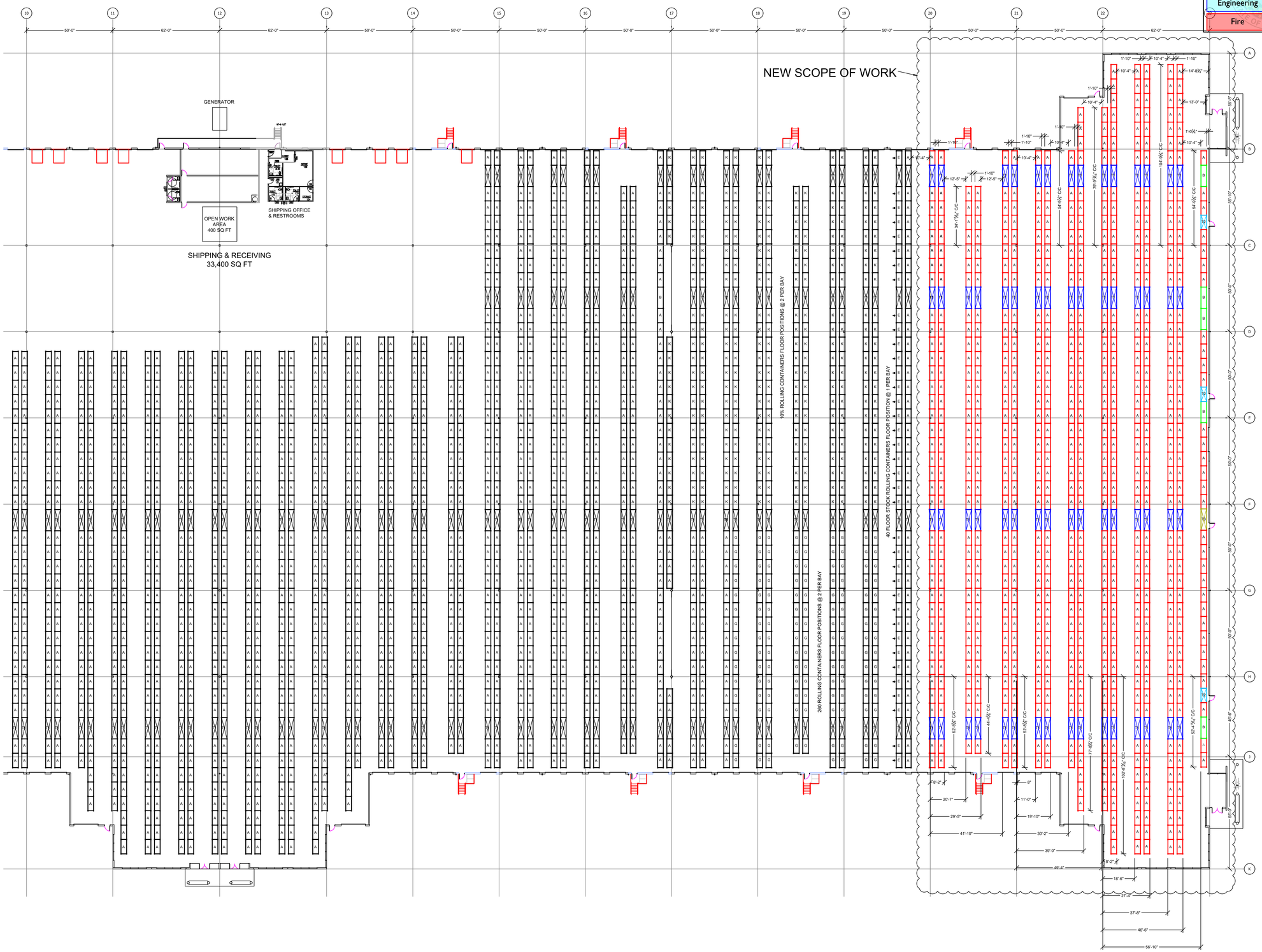

EXPIRES
04-12-2022

All rack to be inspected for damage prior to installation. Any damaged components, i.e. frames with bent or damaged uprights, bent or missing bracing, damaged beams, etc., are to be separated and not installed without prior approval from the engineer.

REV #	DATE	DESCRIPTION
16	10/12/21	proposed dea cage expansion
15	10/1/21	as built
14	8/19/21	proposed dea cage expansion
13	7/21/21	install
12	6/28/21	Move cage, relocate rack.
11	6/25/21	relocate rack
10	5/21/21	rev layout
9	4/13/21	rev pallet stop counts
8	4/13/21	add egress
7	4/12/21	add pallet stops
6	4/9/21	rev layout
18	1/25/22	phase 2 pe drawings
17	1/14/21	rev row spacers

SCALE	DESIGNER	
nts	PH	
DATE	DRAWN BY	SHEET #
1/25/22	ROS	L3

LifeScience Logistics
302 33rd Street SE, Puyallup, WA 98372

Facility Layout Expansion Install

DRAWING #
20186-000296-18

MALIN™
A RAYMOND COMPANY

PRCTI20220562

City of Puyallup
Development & Permitting Services
ISSUED PERMIT

Building	Planning
Engineering	Public Works
Fire	Traffic

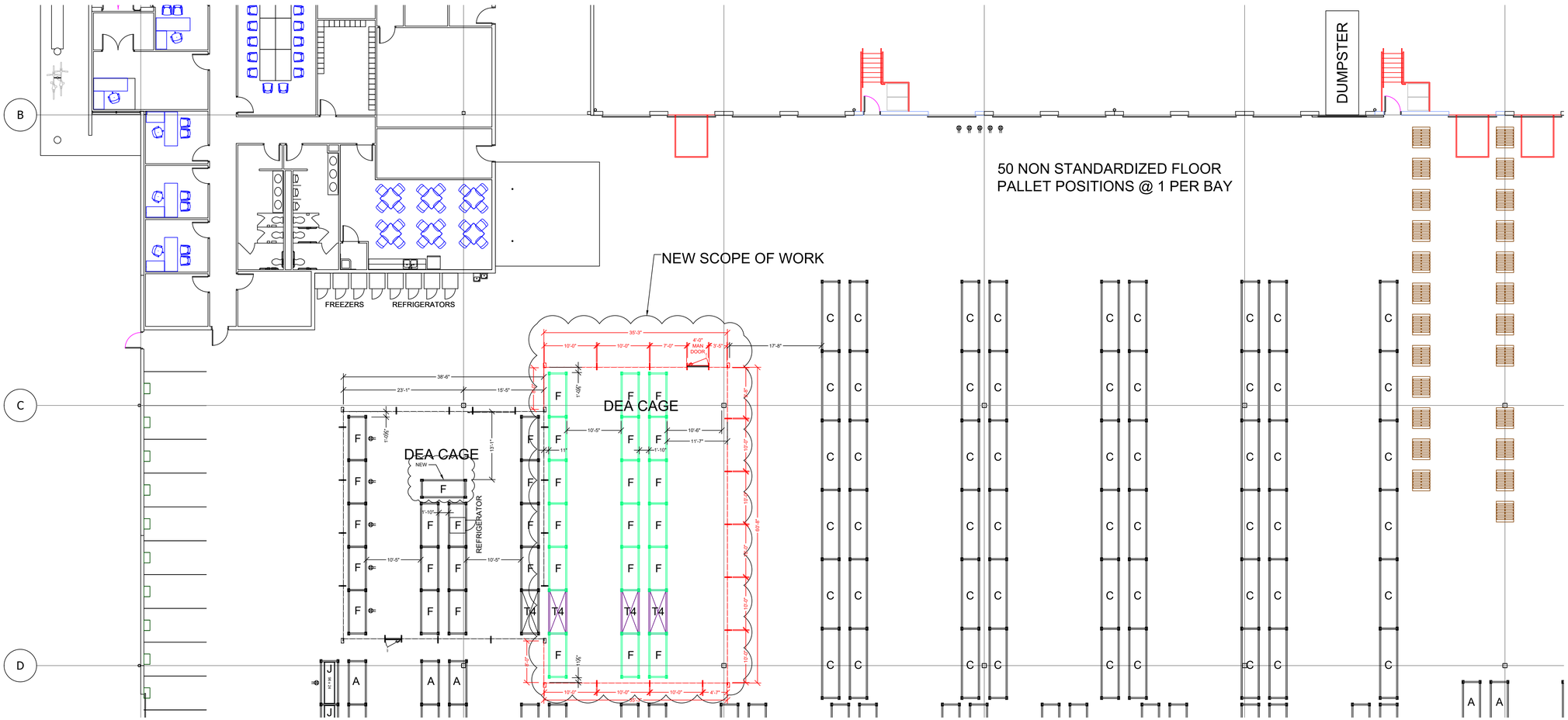

All rack to be inspected for damage prior to installation. Any damaged components, i.e. frames with bent or damaged uprights, bent or missing bracing, damaged beams, etc., are to be separated and not installed without prior approval from the engineer.

REV #	DATE	DESCRIPTION
16	10/12/21	proposed dea cage expansion
15	10/1/21	as built
14	8/19/21	proposed dea cage expansion
13	7/21/21	install
12	6/28/21	Move cage, relocate rack.
11	6/25/21	relocate rack
10	5/21/21	rev layout
9	4/13/21	rev pallet stop counts
8	4/13/21	add egress
7	4/12/21	add pallet stops
6	4/9/21	rev layout
18	1/25/22	phase 2 pe drawings
17	11/4/21	rev row spacers

SCALE	DESIGNER	
3/32"=1'-0"	PH	
DATE	DRAWN BY	SHEET #
1/25/22	ROS	L4

SAL E. FATEEN
STATE OF WASHINGTON
45295
REGISTERED
PROFESSIONAL ENGINEER
EXPIRES
04-12-2022

LifeScience Logistics
302 33rd Street SE, Puyallup, WA 98372

DEA Cage Expansion Install

DRAWING #
20186-000296-18

MALIN™
A RAYMOND COMPANY

PRCTI20220562

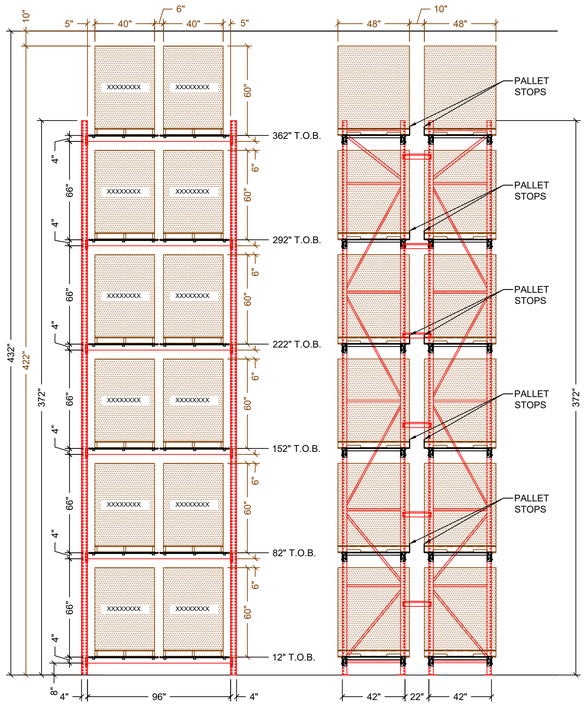

A SELECTIVE RACK ELEVATION
Scale: 1/4"=1'-0"

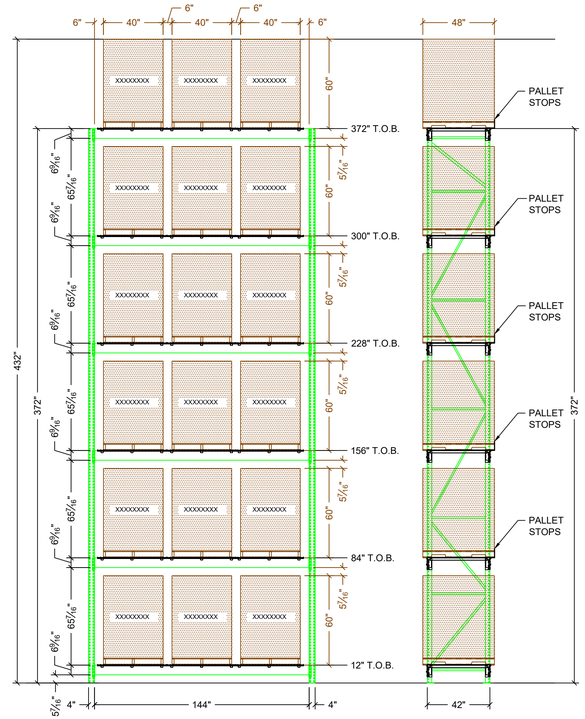

B SELECTIVE RACK ELEVATION
Scale: 1/4"=1'-0"

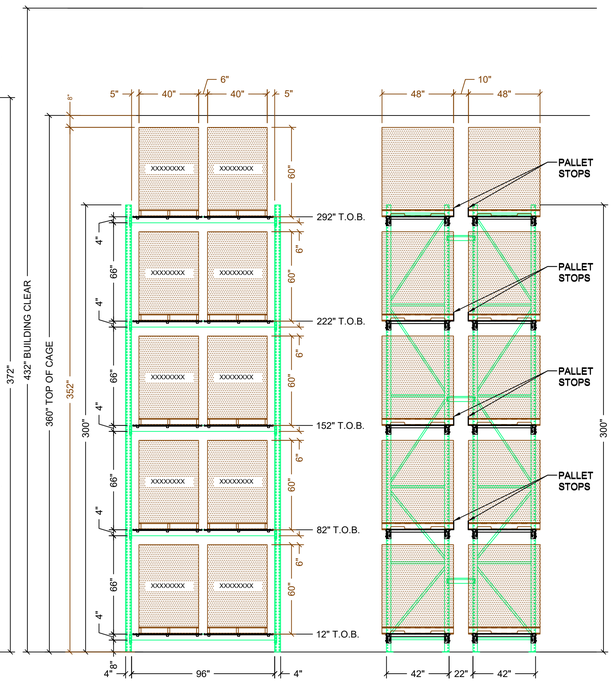

F SELECTIVE RACK ELEVATION
Scale: 1/4"=1'-0"

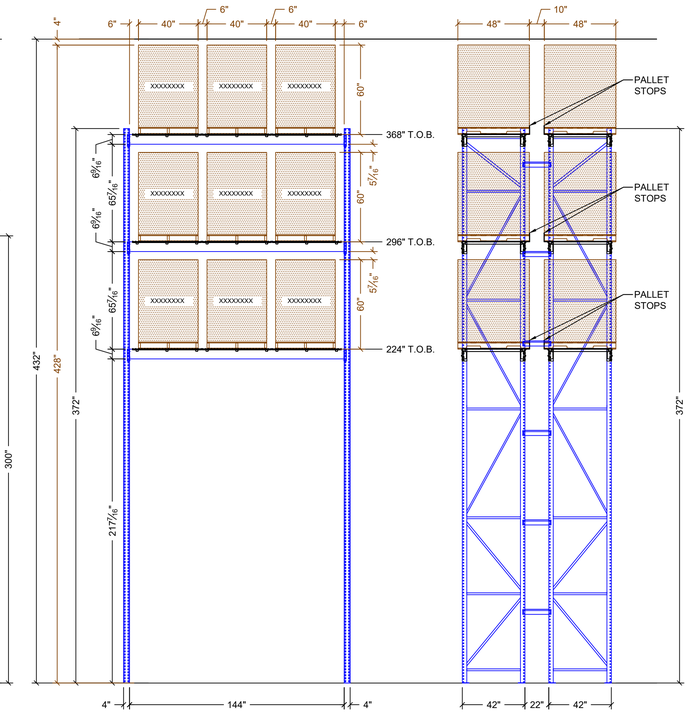

T1 SELECTIVE TUNNEL RACK ELEVATION
Scale: 1/4"=1'-0"

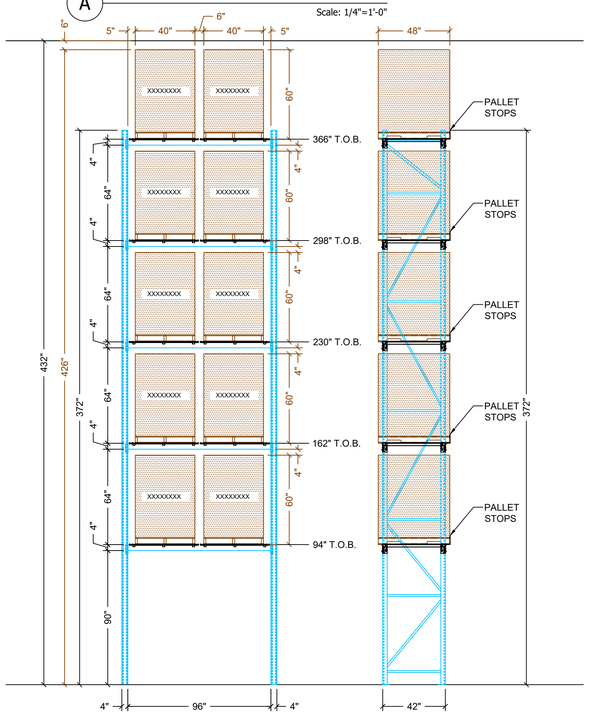

T2 SELECTIVE TUNNEL RACK ELEVATION
Scale: 1/4"=1'-0"

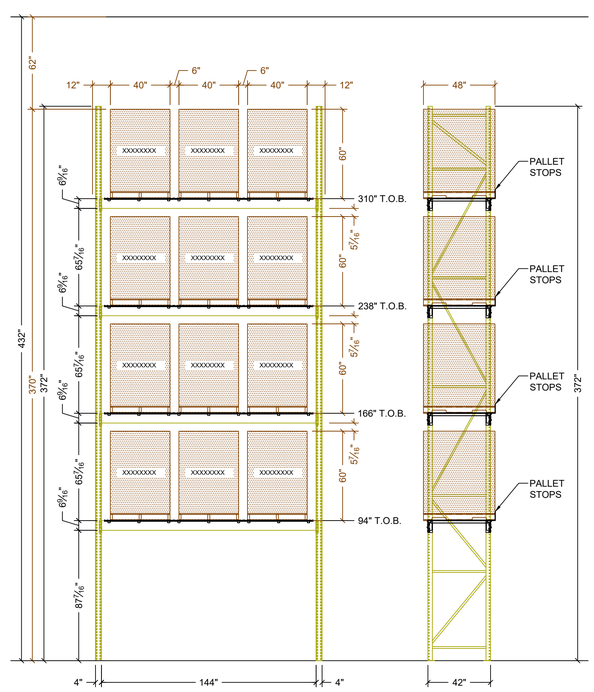

T3 SELECTIVE TUNNEL RACK ELEVATION
Scale: 1/4"=1'-0"

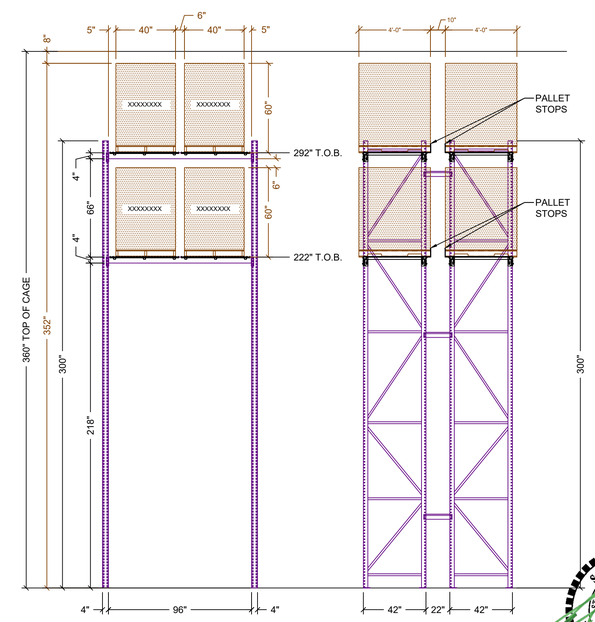

T4 SELECTIVE TUNNEL RACK ELEVATION
Scale: 1/4"=1'-0"

All rack to be inspected for damage prior to installation. Any damaged components, i.e. frames with bent or damaged uprights, bent or missing bracing, damaged beams, etc., are to be separated and not installed without prior approval from the engineer.

City of Puyallup
Development & Permitting Services
ISSUED PERMIT

Building	Planning
Engineering	Public Works
Fire	Traffic

REV #	DATE	DESCRIPTION
16	10/12/21	proposed dea cage expansion
15	10/1/21	as built
14	8/19/21	proposed dea cage expansion
13	7/21/21	install
12	6/28/21	Move cage, relocate rack.
11	6/25/21	relocate rack
10	5/21/21	rev layout
9	4/13/21	rev pallet stop counts
8	4/13/21	add egress
7	4/12/21	add pallet stops
6	4/9/21	rev layout
18	1/25/22	phase 2 pe drawings
17	11/4/21	rev row spacers

SCALE:	DRAWN BY:	
1/4'=1'-0"	PH	
DATE: 1/25/22	DRAWN BY: ROS	SHEET #: E3

LifeScience Logistics
302 33rd Street SE, Puyallup, WA 98372

Rack Elevations Install

DRAWING #: 20186-000296-18

MALIN™
A RAYMOND COMPANY

SAL E. FATBEN
STATE OF WASHINGTON
45954
REGISTERED PROFESSIONAL ENGINEER
EXPIRES
04-12-2022

PRCTI20220562

PRCTI202205

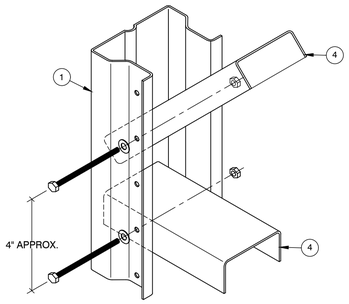

ATTACH W/ (1) 5/16"Ø GR. 5 BOLT

V-A TYPICAL BRACE TO COLUMN CONNECTION

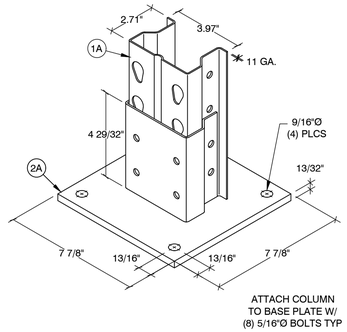

ATTACH COLUMN
TO BASE PLATE W/
(8) 5/16"Ø BOLTS TYP

2A BASE PLATE

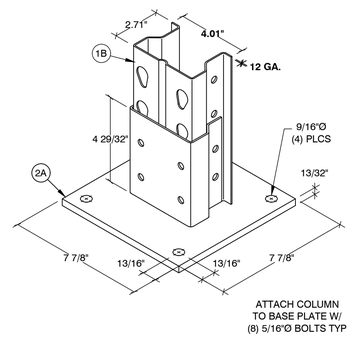

ATTACH COLUMN
TO BASE PLATE W/
(8) 5/16"Ø BOLTS TYP

2A BASE PLATE

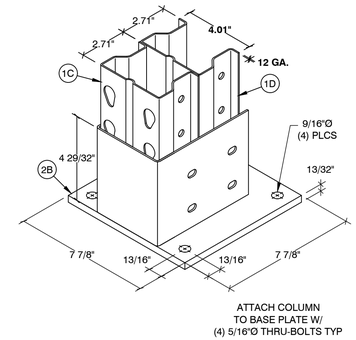

ATTACH COLUMN
TO BASE PLATE W/
(4) 5/16"Ø THRU-BOLTS TYP

2B BASE PLATE

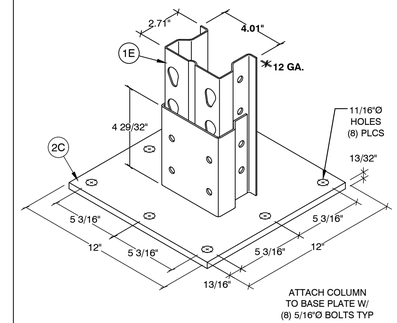

ATTACH COLUMN
TO BASE PLATE W/
(8) 5/16"Ø BOLTS TYP

2C BASE PLATE

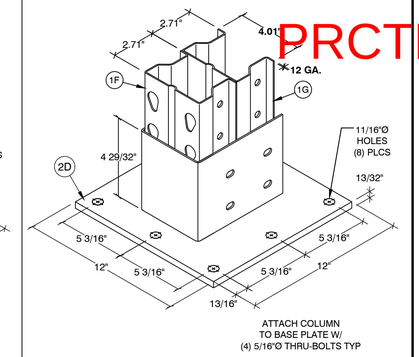

ATTACH COLUMN
TO BASE PLATE W/
(4) 5/16"Ø THRU-BOLTS TYP

2D BASE PLATE

1A COLUMN

BASE PLATE TYPE	ANCHOR DIA.	NOMINAL EMBED.	# OF ANCHORS PER BASE PLATE
2A 2B	1/2"Ø	3 5/8"	4
2C 2D	5/8"Ø	4 3/8"	8

1B COLUMN

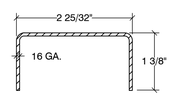

1C COLUMN **1D BACKER**

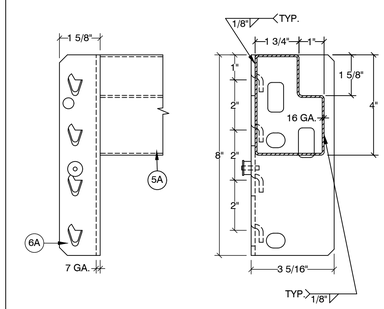

1E COLUMN

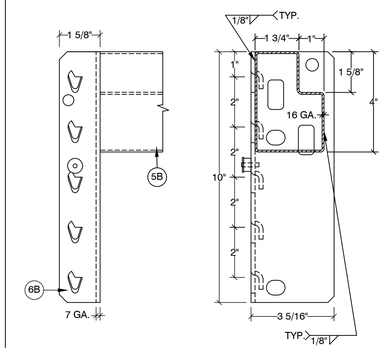

1F COLUMN **1G BACKER**

NOTES:

1. DESIGNED PER SECTION 2209 OF THE 2018 IBC.
   Fa = **1.0** & Ss = **1.25**
   SEISMIC DESIGN CATEGORY: **D**.
2. STORAGE CAPACITY: **SEE ELEVATION**.
3. STEEL: ASTM **A1011** FOR SHAPE Fy = **55,000** PSI GRADE **55.**
4. ALL BOLTS: **A307** (UNLESS OTHERWISE NOTED).
5. ANCHORS: DEWALT POWER-STUD+ SD1, ICC **#ESR-1917.**
6. PERIODIC SPECIAL INSPECTION IS REQUIRED DURING ANCHOR INSTALLATION.
7. CONCRETE: **6"** THICK x **4,000** PSI.
8. MODULUS OF SUB-GRADE REACTION: **50** PCI.
   (DISTURBED SOIL: **500** PSF)
9. THE MAXIMUM TOP TO BOTTOM OUT-OF-PLUMB RATIO AND OUT-OF-STRAIGHT RATIO RACK COLUMN IS 1/240 (FOR EXAMPLE 1/2" PER 10 FEET OF HEIGHT). COLUMN WHOSE OUT-OF-PLUMB RATIO OR OUT-OF-STRAIGHT RATIO EXCEEDS THIS LIMIT SHALL BE UNLOADED AND RE-PLUMBED. ANY DAMAGED PARTS MUST BE REPAIRED OR REPLACED.
10. THE OWNER SHALL MAINTAIN THE STRUCTURAL INTEGRITY OF THE RACK SYSTEM BY ASSURING PROPER OPERATIONAL, HOUSE KEEPING, AND MAINTENANCE PROCEDURES, BUT NOT LIMITED TO, THE FOLLOWING:
    A) PROHIBIT ANY OVER LOADING OF ANY PALLET POSITIONS AND OF THE OVERALL RACK SYSTEM.
    B) REGULARLY INSPECT FOR DAMAGE. IF DAMAGE IS FOUND, IMMEDIATELY UNLOAD THE AFFECTED AREA AND REPLACE OR REPAIR ANY DAMAGED COLUMNS, BEAMS, OR OTHER STRUCTURAL COMPONENTS.
    C) REQUIRE ALL PALLETS TO BE MAINTAINED IN GOOD, SAFE OPERATING CONDITION.
    D) ENSURE THAT PALLETS ARE PROPERLY PLACED ONTO PALLET LOAD SUPPORT MEMBERS IN PROPERLY STACKED AND STABLE POSITION.
    E) REQUIRE THAT ALL GOODS STORED ON EACH PALLET TO BE PROPERLY STACKED AND STABLE.
    F) PROHIBIT DOUBLE STACKING OF ANY PALLET POSITION, INCLUDING THE TOP MOST POSITION, UNLESS THE RACK SYSTEM IS SPECIFICALLY DESIGNED FOR SUCH LOADING.
    G) ENSURE THAT THE RACKS ARE NOT MODIFIED OR REARRANGED IN A MANNER NOT WITHIN THE ORIGINAL DESIGN CONFIGURATIONS.

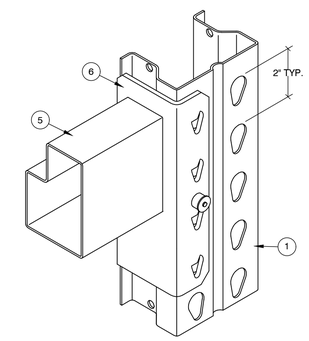

V-B TYPICAL BEAM TO COLUMN CONNECTION

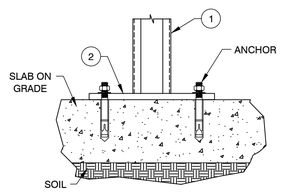

3 ANCHOR

4 HORIZONTAL & DIAGONAL BRACE

5A BEAM

5B BEAM

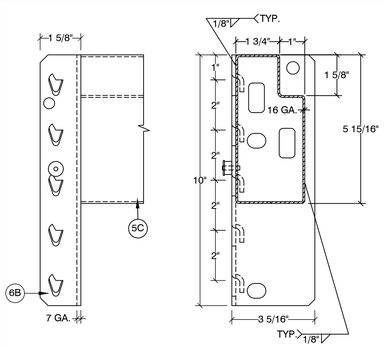

6B CONNECTOR

5C BEAM

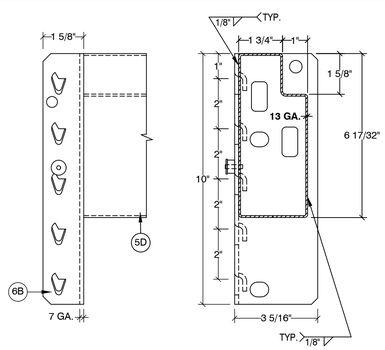

6B CONNECTOR

5D BEAM

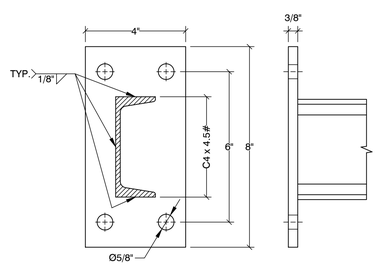

ATTACH W/ (4) 1/2"Ø A449 BOLTS

7 H.D. ROW SPACER

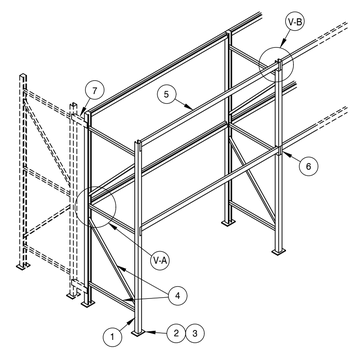

GENERAL CONFIGURATION

SEE DRAWING 22-0685-B
FOR STORAGE RACK ELEVATIONS

STORAGE RACK ELEVATIONS

City of Puyallup
Development & Permitting Services
ISSUED PERMIT

Building	Planning
Engineering	Public Works
Fire	Traffic

ADDRESS:
LIFE SCIENCE LOGISTICS (PUYALLUP
302 33RD STREET SE
PUYALLUP, WA 9837

REV.	DATE	BY	DESCRIPTION

SEIZMIC
EST. 1985
SEIZMIC
ENGINEERING, INC.
1130 E. Cypress St.
Covina, California
91724
Tel.(909)869-0989

DRAWN BY:	B.G. / T.C.
DATE:	04/20/21
LAST REV. BY:	M.V.
REV. DATE:	03/23/22
TYPE:	MCX
SCALE:	N.T.S.
APRV'D BY:	SAL E. FATEEN

STATE OF WASHINGTON
SAL E. FATEEN
429558
REGISTERED
PROFESSIONAL ENGINEER
EXPIRES
04-12-2022

DESCRIPTION:
STORAGE RACK DETAILS

DRAWING NUMBER:
22-0685--A

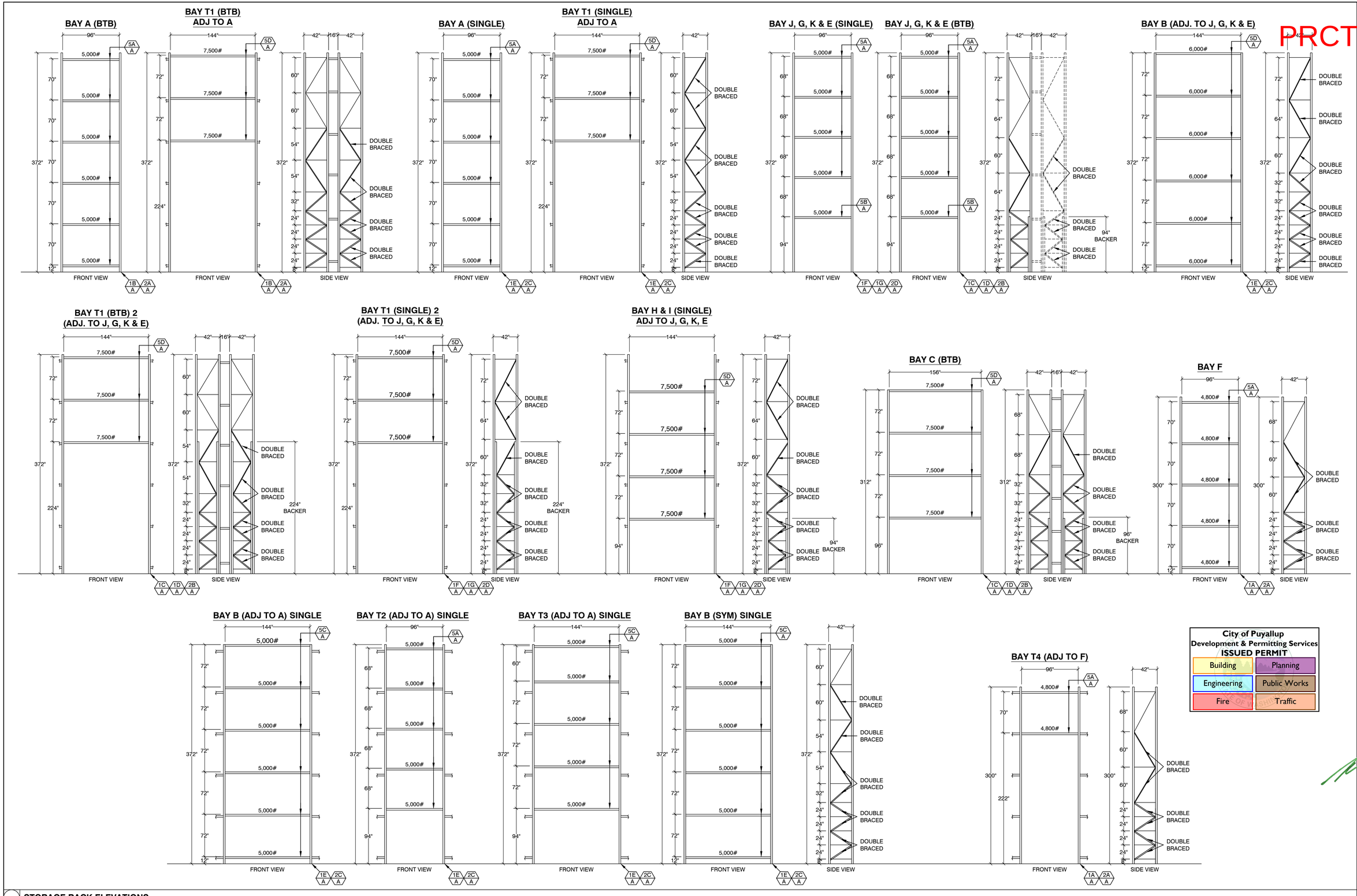

City of Puyallup
Development & Permitting Services
ISSUED PERMIT

Building	Planning
Engineering	Public Works
Fire	Traffic

PRCTI202205

ADDRESS:
LIFE SCIENCE LOGISTICS (PUYALLUP
302 33RD STREET SE
PUYALLUP, WA 98372

REV.	DATE	BY	DESCRIPTION

SEIZMIC
EST. 1985
SEIZMIC ENGINEERING, INC.
1130 E. Cypress St.
Covina, California
91724
Tel.(909)869-0989

DRAWN BY:	B.G. / T.C.
DATE:	04/20/21
LAST REV. BY:	
REV. DATE:	
TYPE:	MCX
SCALE:	N.T.S.
APRVD BY:	SAI E. FATEEN

STATE OF WASHINGTON
SAI E. FATEEN
40955
REGISTERED PROFESSIONAL ENGINEER
EXPIRES
04-12-2022

DESCRIPTION:
STORAGE RACK ELEVATIONS

DRAWING NUMBER:
22-0685-B

STORAGE RACK ELEVATIONS

INSPECTION & MAINTENANCE NOTES TO TENANT

FIRE INSPECTION NOTES

1. BY WAY OF USING AND CONFORMING TO THIS DOCUMENT AS APPROVED BY THE AUTHORITY HAVING JURISDICTION, THE TENANT AGREES TO CONFORM TO THE CONTENTS HEREIN. ANY MODIFICATIONS TO THE HIGH PILED STORAGE AREA CONFIGURATIONS NULLIFIES THE VALIDITY OF THIS DOCUMENT, AND A NEW HIGH PILED STORAGE REPORT MUST BE RESUBMITTED FOR GOVERNING FIRE APPROVAL. ALL CHANGES AND LACK OF COMPLIANCE WITH THE GOVERNING CODES ARE OUTSIDE THE SCOPE OF THIS REPORT AND ARE THE SOLE RESPONSIBILITY OF THE BUILDING TENANT TO MAINTAIN.

2. THE HIGH PILED COMBUSTIBLE STORAGE PERMIT WILL BE ISSUED AFTER FINAL INSPECTION BY THE FIRE DEPARTMENT AND APPROVAL OF THE HIGH PILED COMBUSTIBLE STORAGE SUBMITTAL. IT IS THE SOLE RESPONSIBILITY OF THE BUILDING TENANT TO VERIFY THAT FINAL INSPECTION WITH THE LOCAL GOVERNING FIRE DEPARTMENT HAS BEEN PERFORMED AFTER ANY AND ALL WORK FOR THIS PROJECT IS FINISHED.

3. IT IS THE TENANT'S SOLE RESPONSIBLITY TO CONTACT THE LOCAL AUTHORITY HAVING JURISDICTION REGARDING THE ORDER OF THE HIGH PILED STORAGE INSPECTION(S) RELATIVE TO OTHER ASSOCIATED CONCURRENT INSPECTIONS, SUCH AS AN ANCHOR INSPECTION OR BUILDING INSPECTION BY THE BUILDING DEPARTMENT, AS WELL AS WHETHER AN "UNLOADED" HIGH PILED STORAGE INSPECTION IS REQUIRED PRIOR TO A "LOADED" INSPECTION.

4. ***WHERE APPLICABLE, SEE SEPARATE "PRE-INSPECTION CHECKLIST" DOCUMENT PROVIDED BY TRIAD FIRE CONSULTANTS, INC. PRIOR TO CALLING FOR FIRE INSPECTION. EMAIL SUPPORT@HIGHPILEDSTORAGE.COM FOR A COPY.***

5. WHERE REQUIRED BY THE FIRE CODE OFFICIAL, A VISUAL METHOD OF INDICATING THE MAXIMUM ALLOWABLE STORAGE HEIGHT SHALL BE PROVIDED.

ONGOING HOUSEKEEPING & MAINTENANCE

1. CLEARANCE FROM IGNITION SOURCES SHALL BE PROVIDED. CLEARANCE BETWEEN IGNITION SOURCES, SUCH AS LUMINAIRES, HEATERS, FLAME-PRODUCING DEVICES AND COMBUSTIBLE MATERIALS, SHALL BE MAINTAINED IN AN APPROVED MANNER.

2. SMOKING SHALL BE PROHIBITED. APPROVED "NO SMOKING" SIGNS SHALL BE CONSPICUOUSLY POSTED IN ACCORDANCE WITH SECTION 310. THE FIRE CODE OFFICIAL IS AUTHORIZED TO ORDER THE POSTING OF "NO SMOKING" SIGNS IN A CONSPICUOUS LOCATION IN EACH STRUCTURE OR LOCATION IN WHICH SMOKING IS PROHIBITED. THE CONTENT, LETTERING, SIZE, COLOR AND LOCATION OF REQUIRED "NO SMOKING" SIGNS SHALL BE APPROVED. A POSTED "NO SMOKING" SIGN SHALL NOT BE OBSCURED, REMOVED, DEFACED, MUTILATED OR DESTROYED. SMOKING SHALL NOT BE PERMITTED NOR SHALL A PERSON SMOKE, THROW OR DEPOSIT ANY LIGHTED OR SMOLDERING SUBSTANCE IN ANY PLACE WHERE "NO SMOKING" SIGNS ARE POSTED.

3. WHEN RESTOCKING IS NOT BEING CONDUCTED, AISLES SHALL BE KEPT CLEAR OF STORAGE, WASTE MATERIAL AND DEBRIS. FIRE DEPARTMENT ACCESS DOORS, AISLES AND EXIT DOORS SHALL NOT BE OBSTRUCTED. DURING RESTOCKING OPERATIONS USING MANUAL STOCKING METHODS, A MINIMUM UNOBSTRUCTED AISLE WIDTH OF 24" SHALL BE MAINTAINED IN 48-INCH OR SMALLER AISLES, AND A MINIMUM UNOBSTRUCTED AISLE WIDTH OF ONE-HALF OF THE REQUIRED AISLE WIDTH SHALL BE MAINTAINED IN AISLES GREATER THAN 48". DURING MECHANICAL STOCKING OPERATIONS, A MINIMUM UNOBSTRUCTED AISLE WIDTH OF 44" SHALL BE MAINTAINED IN ACCORDANCE WITH SECTION 3206.10.

4. THE STRUCTURAL INTEGRITY OF RACKS SHALL BE MAINTAINED.

5. IF FLUE SPACES ARE REQUIRED IN ACCORDANCE WITH THE DETAILS IN THIS DOCUMENT, THEY SHALL BE MAINTAINED AT ALL TIMES.

SCOPE OF WORK

THE PURPOSE AND SCOPE OF THIS DOCUMENT IS TO DEFINE AND REPORT THE HIGH PILED COMBUSTIBLE STORAGE REQUIREMENTS FOR **LIFE SCIENCE LOGISTICS** IN COMPLIANCE WITH ALL GOVERNING CODES TO ACQUIRE A HIGH PILED COMBUSTIBLE STORAGE PERMIT FROM THE LOCAL FIRE AUTHORITY HAVING JURISDICTION PURSUANT TO IFC §105.6, WHICH STATES THAT AN OPERATIONAL PERMIT IS REQUIRED TO USE A BUILDING OR PORTION THEREOF AS A HIGH-PILED STORAGE AREA EXCEEDING 500 SQUARE FEET.

DETAILED SCOPE OF WORK △1

THIS PROPOSAL IS A MODIFICATION TO THE PREVIOUSLY APPROVED HPS PERMIT UNDER SR# B-21-0335. THE SCOPE OF WORK PROPOSED IS FOR THE INSTALLATION OF ADDITIONAL STORAGE RACKS IN A HIGH PILED STORAGE CONFIGURATION.

DEFERRED SUBMITTALS

THE PROPOSED SCOPE OF WORK IN THIS PERMIT WILL NOT REQUIRE ANY CHANGES TO THE BUILDING CONSTRUCTION OR REQUIRED FIRE PROTECTION SYSTEMS.

REFERENCED GOVERNING CODES

- 2018 INTERNATIONAL FIRE CODE
- 2018 INTERNATIONAL BUILDING CODE
- 2016 NFPA 13

GENERAL BUILDING INFORMATION

BUILDING CONSTRUCTION TYPE	IIIB
OCCUPANCY GROUP(S)	B/S-1 △1
TOTAL WAREHOUSE AREA (1 OF 1)	428,266 SF
- AGGREGATE HPS AREA	347,081 SF
- PREVIOUSLY APPROVED HPS AREA	281,578 SF
- PROPOSED HPS AREA (IN SCOPE)	65,503 SF
- EXISTING CEILING SPRINKLERS	ESFR 165° (ORD.) (12) K-22 @ 40 PSI (WET)
- EXISTING CEILING HEIGHT	39'-0" TO 45'-0"

COMMODITY CLASSIFICATION

COMMODITIES TO BE STORED IN HIGH-PILED COMBUSTIBLE STORAGE AREAS AS DEFINED BY §3203 OF THE IFC.

SEE ATTACHED LETTER OF INTENT FOR ALL COMMODITIES, MAXIMUM STORAGE HEIGHTS PER COMMODITY CLASS, AND STORAGE CONFIGURATIONS. SEE DETAIL 1/HP1.

DESIGNATION AND SEPARATION OF AREAS

HIGH-PILED STORAGE AREAS, AND PORTIONS OF HIGH-PILED STORAGE AREAS INTENDED FOR STORAGE OF A DIFFERENT COMMODITY CLASS THAN ADJACENT AREAS, SHALL BE DESIGNED AND SPECIFICALLY DESIGNATED TO CONTAIN CLASS I, CLASS II, CLASS III, CLASS IV OR HIGH-HAZARD COMMODITIES. THE DESIGNATION OF A HIGH-PILED COMBUSTIBLE STORAGE AREA, OR PORTION THEREOF INTENDED FOR STORAGE OF A DIFFERENT COMMODITY CLASS, SHALL BE BASED ON THE HIGHEST HAZARD COMMODITY CLASS STORED.

EXTENT AND TYPE OF PROTECTION:

1. WHERE REQUIRED BY IFC TABLE 3206.2, FIRE DETECTION SYSTEMS, SMOKE AND HEAT REMOVAL AND AUTOMATIC SPRINKLER DESIGN DENSITIES SHALL EXTEND THE LESSER OF 15 FEET BEYOND THE HIGH-PILED STORAGE AREA OR TO A PERMANENT PARTITION. WHERE PORTIONS OF HIGH-PILED STORAGE AREAS HAVE DIFFERENT FIRE PROTECTION REQUIREMENTS BECAUSE OF COMMODITY, METHOD OF STORAGE OR STORAGE HEIGHT, THE FIRE PROTECTION FEATURES REQUIRED BY IFC TABLE 3206.2 WITHIN THIS AREA SHALL BE BASED ON THE MOST RESTRICTIVE DESIGN REQUIREMENTS.

2. THE AGGREGATE OF ALL HIGH-PILED STORAGE AREAS WITHIN A BUILDING SHALL BE USED FOR THE APPLICATION OF TABLE 3206.2 UNLESS SUCH AREAS ARE SEPARATED FROM EACH OTHER BY 1-HOUR FIRE BARRIERS CONSTRUCTED IN ACCORDANCE WITH §707 OF THE IBC. OPENINGS IN SUCH FIRE BARRIERS SHALL BE PROTECTED BY OPENING PROTECTIVES HAVING A 1-HOUR FIRE PROTECTION RATING.

HPS AREA (1 OF 1): HIGHEST TABLE 3206.2 HAZARD RANGE IS HIGH HAZARD.

FIRE PROTECTION & LIFE SAFETY REQUIREMENTS

HPS AREA (*1 OF 1*)

TABLE 3206.2 REQUIREMENT	REQUIRED	PROVIDED
COMMODITY CLASS	-	HIGH HAZARD
HPS AREA RANGE	-	>300,000 SF
PUBLIC-ACCESSIBILITY	-	NON-PUBLIC
MAXIMUM TRAVEL DISTANCE	-	<=250 FT.
AUTOMATIC SPRINKLER SYSTEM		
- *(E) ESFR AREA (WAREHOUSE)*	YES (ALLOWED)	YES (ESFR)
FIRE DETECTION SYSTEM	NO	NO
BUILDING ACCESS	YES	YES
SMOKE AND HEAT REMOVAL		
- #/SMOKE VENTS IN 15FT. PERIMETER	0	0
- *ESFR-PROTECTED AREA*	NO *	NO
PALLETIZED/SHELF STORAGE	N/A	NONE

TABLE 3206.2 FOOTNOTES:

* TABLE 3206.2 FOOTNOTE (h) STATES THAT SMOKE VENTS ARE NOT REQUIRED WHERE STORAGE AREAS ARE PROTECTED BY EITHER EARLY SUPPRESSION FAST RESPONSE (ESFR) SPRINKLER SYSTEMS OR CONTROL MODE SPECIAL APPLICATION SPRINKLERS WITH A RESPONSE TIME INDEX OF 50 (MxS)^1/2 OR LESS THAT ARE LISTED TO CONTROL A FIRE IN THE STORED COMMODITIES WITH 12 OR FEWER SPRINKLERS, INSTALLED IN ACCORDANCE WITH SECTION 903.3.1.1.

FIRE APPARATUS ACCESS ROADS

WHERE BUILDING ACCESS IS REQUIRED BY TABLE 3206.2, FIRE APPARATUS ACCESS ROADS IN ACCORDANCE WITH §503 SHALL BE PROVIDED WITHIN 150 FEET OF ALL PORTIONS OF THE EXTERIOR WALLS OF BUILDINGS USED FOR HIGH-PILED STORAGE,EXCEPT WHERE FIRE APPARATUS ACCESS ROADS CANNOT BE INSTALLED BECAUSE OF TOPOGRAPHY, RAILWAYS, WATERWAYS, NON-NEGOTIABLE GRADES OR OTHER SIMILAR CONDITIONS, THE FIRE CODE OFFICIAL IS AUTHORIZED TO REQUIRE ADDITIONAL FIRE PROTECTION.

KNOX BOXES

AS REQUIRED BY IFC §506.1, WHERE ACCESS TO OR WITHIN A STRUCTURE OR AN AREA IS RESTRICTED BECAUSE OF SECURED OPENINGS OR WHERE IMMEDIATE ACCESS IS NECESSARY FOR LIFE-SAVING OR FIRE-FIGHTING PURPOSES, THE FIRE CODE OFFICIAL IS AUTHORIZED TO REQUIRE A KEY BOX TO BE INSTALLED IN AN APPROVED LOCATION. THE KEY BOX SHALL BE OF AN APPROVED TYPE LISTED IN ACCORDANCE WITH UL 1037, AND SHALL CONTAIN KEYS TO GAIN NECESSARY ACCESS AS REQUIRED BY THE FIRE CODE OFFICIAL.

ACCESS DOORS

1. WHERE EXTERIOR WALLS SURROUNDING HIGH PILED STORAGE AREAS FACE FIRE APPARATUS ACCESS ROADS, SUCH WALLS SHALL BE PROVIDED WITH FIRE DEPARTMENT ACCESS DOORS.
2. FIRE DEPARTMENT ACCESS DOORS SHALL BE ABLE TO BE ACCESSED WITHOUT THE USE OF A LADDER.
3. FIRE DEPARTMENT ACCESS DOORS SHALL BE LABELED ON THE EXTERIOR SIDE WITH THE FOLLOWING SIGN OR OTHER APPROVED SIGN:

   FIRE DEPARTMENT ACCESS DOOR DO NOT BLOCK

   THE LETTERING SHALL BE IN A CONTRASTING COLOR TO THE BACKGROUND. LETTERS SHALL HAVE A MINIMUM HEIGHT OF 2 INCHES WITH A MINIMUM STROKE OF 3/8 INCH.

4. THE REQUIRED FIRE DEPARTMENT ACCESS DOORS SHALL BE DISTRIBUTED SUCH THAT THE LINEAL DISTANCE BETWEEN ADJACENT FIRE DEPARTMENT ACCESS DOORS DOES NOT EXCEED 125 FEET MEASURED CENTER TO CENTER. **
5. FIRE DEPARTMENT ACCESS DOORS SHALL BE NOT LESS THAN 3 FEET IN WIDTH AND 6 FEET 8 INCHES IN HEIGHT. ROLL-UP DOORS SHALL NOT BE CONSIDERED FIRE DEPARTMENT ACCESS DOORS UNLESS APPROVED.
6. LOCKING DEVICES ON FIRE DEPARTMENT ACCESS DOORS SHALL BE APPROVED.
7. WHERE FIRE DEPARTMENT ACCESS DOORS ARE REQUIRED, A KEY BOX SHALL BE INSTALLED IN ACCORDANCE WITH §506.1. THE KEY BOX SHALL CONTAIN KEYS OR DEVICES TO ALLOW FOR ENTRY THROUGH THE FIRE DEPARTMENT ACCESS DOORS.

** NOTE: IFC §3206.7.5 EXCEPTION STATES THAT THE LINEAR DISTANCE BETWEEN ADJACENT ACCESS DOORS SHALL NOT EXCEED 200 FEET IN EXISTING BUILDINGS WHERE CHANGE IN OCCUPANCY IS NOT PROPOSED.

SMOKE VENTS

THERE ARE NO SMOKE VENTS PRESENT.

HPS AREA (*1 OF 1*)

SMOKE VENTS ARE NOT REQUIRED FOR THIS HIGH PILED STORAGE AREA.

AISLES

1. AISLES SEPARATING STORAGE PILES OR RACKS SHALL COMPLY WITH NFPA 13 AND IFC CHAPTER 10.
2. REQUIRED AISLE WIDTHS SHALL EXTEND FROM FLOOR TO CEILING. RACK STRUCTURAL SUPPORTS AND CATWALKS ARE ALLOWED TO CROSS AISLES AT A MINIMUM HEIGHT OF 6 FEET 8 INCHES ABOVE THE FINISHED FLOOR LEVEL, PROVIDED THAT SUCH SUPPORTS DO NOT INTERFERE WITH FIRE DEPARTMENT HOSE STREAM TRAJECTORY.
3. DEAD-END AISLES SHALL BE A MAXIMUM OF 50 FEET IN LENGTH FOR SPRINKLERED BUILDINGS.
4. AISLES PROVIDING ACCESS TO EXITS AND FIRE DEPARTMENT ACCESS DOORS IN NON-PUBLIC ACCESSIBLE SPRINKLERED HIGH PILED STORAGE AREAS SHALL BE A MINIMUM OF 44" WIDE.

PORTABLE FIRE EXTINGUISHERS

WHERE FIRE EXTINGUISHERS ARE OBSTRUCTED FROM VIEW, APPROPRIATE SIGNS SHALL BE AFFIXED AS TO IDENTIFY LOCATION PER NFPA STD. 10 §6.1.3.3.2.

FIRE EXTINGUISHERS SHALL BE PROVIDED IN ACCORDANCE WITH IFC SECTION 906.1(5), TABLE 906.1, TABLE 906.3(1), AND NFPA STANDARD 10 WITH THE FOLLOWING REQUIREMENTS:

1. MINIMUM RATING OF 4-A:80BC (EXTRA HAZARD OCCUPANCY) WHERE FLAMMABLE LIQUIDS ARE NOT PRESENT.
2. MAX. SQUARE FOOTAGE OF PROTECTION PER EXTINGUISHER IS 4,000 SQ.FT. BASED ON 4 UNITS OF "A" AGENT PER EXTINGUISHER PER IFC §906.
3. MAX. FLOOR AREA FOR A SINGLE EXTINGUISHER IS 11,250 SF.
4. MAX. TRAVEL DISTANCE TO A FIRE EXTINGUISHER IS 75 FT. WHERE FLAMMABLE LIQUIDS ARE NOT PRESENT.

HAZARDOUS MATERIALS

THE PROPOSED SCOPE OF WORK DOES NOT INCLUDE THE STORAGE OF HAZARDOUS MATERIALS. SHOULD HAZARDOUS MATERIALS STORAGE BE REQUIRED IN THE FUTURE, A SEPARATE PLAN AND ANALYSIS MUST BE SUBMITTED TO THE AUTHORITY HAVING JURISDICTION FOR REVIEW AND APPROVAL.

RACK STORAGE

THE CEILING SPRINKLER DESIGN REQUIREMENTS WILL BE IN ACCORDANCE WITH THE FOLLOWING ANALYSIS (PER NFPA 13, TABLE 17.3.3.1):

COMMODITY CLASS	CARTONED UNEXPANDED GROUP A PLASTICS
MAXIMUM STORAGE HEIGHT	40'-0" (35'-8" => OK)
MAXIMUM CEILING HEIGHT	45'-0" (45'-0" => OK)
K-FACTOR	K-22 (K-22 => OK)
MINIMUM OPERATING PRESSURE	40 PSI (40 PSI => OK)
ORIENTATION	PENDENT (PENDENT => OK)

REQUIRED FLUE SPACES AND LOAD LIMITATIONS

FLUE SPACES BETWEEN LOADS ON STORAGE RACKS SHALL BE PROVIDED IN ACCORDANCE WITH CFC TABLE 3208.3. REQUIRED FLUE SPACES SHALL BE MAINTAINED.

SEE ATTACHED LETTER OF INTENT FOR ALL FLUE SPACE DESIGN REQUIREMENTS FOR EACH STORAGE CONFIGURATION. SEE DETAIL 1/HP1.

COLUMN PROTECTION

WHERE FIREPROOFING OF STEEL BUILDING COLUMNS IS NOT PROVIDED AND STORAGE HEIGHTS ARE IN EXCESS OF 15 FEET, PROTECTION OF BUILDING COLUMNS LOCATED WHOLLY OR PARTIALLY WITHIN THE RACK FOOTPRINT INCLUSIVE OF FLUE SPACES OR WITHIN 12" OF THE FOOTPRINT SHALL BE PROTECTED IN ACCORDANCE WITH ONE OF THE FOLLOWING [NFPA 13 §17.1.4.1]:

- STEEL COLUMN PROTECTION IS NOT REQUIRED WHERE PROVISION OF CMSA OR ESFR CEILING SPRINKLER PROTECTION IS PROVIDED.

△2

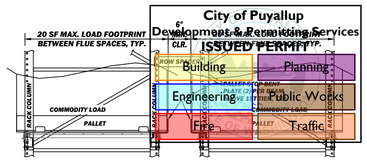

3 ***TYPICAL DOUBLE ROW RACK LONGITUDINAL FLUE SPACE BENT PLATE DETAIL***

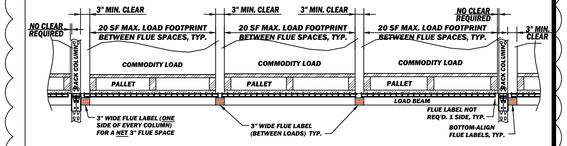

2B ***SINGLE ROW & DOUBLE ROW RACK (3-LOAD BEAM TYP.)***

https://fluelabels.com

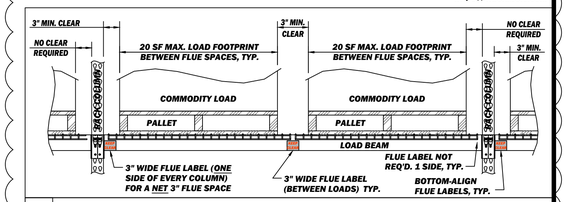

2A ***SINGLE ROW & DOUBLE ROW RACK (STANDARD 2-LOAD BAY) ALT. DETAIL (OK)***

https://fluelabels.com

SAL E. FATEEN
STATE OF WASHINGTON
REGISTERED
PROFESSIONAL ENGINEER
EXPIRES
04-12-2022

Date: April 30, 2021

RE: Life Science Logistics

302 33RD STREET SE, PUYALLUP, WA 98372
High Piled Storage Plan

COMMODITY LETTER OF INTENT

DECLARATION: We propose to store the following commodities in the storage configurations listed in a high piled storage condition:

SINGLE OR DOUBLE ROW STORAGE RACK:

The following commodities are stored on wood pallets on open wire mesh decks.

All aisles between loads on racks are **greater than 8'-0"** wide.

COMMODITIES:

1. Medical supplies (made of steel, aluminum, paper, unexpanded plastic and rubber) and PPE equipment (masks, gowns, gloves, goggles, etc). This commodity is packaged in corrugated cardboard cartons, and either non-banded or banded on 4 sides (but not the top—though permitted to be Encapsulated). While Class I-IV commodities exist, at a worst-case, this is a Cartoned Unexpanded Group A Plastic commodity per CFC Table 3203.8.
   MAXIMUM STORAGE HEIGHT: 40'-0" (35'-8" OK)

REQUIRED FLUE SPACES

Flue Space Requirements (STORAGE > 25 FT.)

ROWS	TRANSVERSE	LONGITUDINAL	VERTICAL ALIGN
SINGLE ROW	3"	0"	Yes
DOUBLE ROW (OPTION #1)	3"	6"	Yes

LOAD LIMITATIONS BETWEEN FLUE SPACES

- All flue space conditions listed above that require 3-inch minimum Transverse flue spaces (with or without a Longitudinal flue space requirement) will not exceed ***20 SF*** in ***total footprint*** between the required flue spaces indicated.
- Loads that exceed the limitations above (ie: "Oversized" loads that would otherwise encroach the required flue spaces) can be placed at the floor level of the rack without regard for flue spaces.
- ***No open-top containers will be permitted to be stored in racking structures above the floor level.***

1 COMMODITY LETTER OF INTENT

TRIAD FIRE CONSULTANTS
10 Hughes #A207, Irvine, CA 92618
(909) 393-9477 o | (909) 393-9476 f | support@highpiledstorage.com

#	DATE	REVISIONS / ISSUE
△1	3/07/2022	CLIENT RACK ADDITION
△2	3/24/2022	CLIENT RACK ELEVATIONS ADDITION

PLAN TITLE: **HIGH PILED STORAGE NOTES**

PROJECT INFO: LIFE SCIENCE LOGISTICS
302 33RD STREET SE
PUYALLUP, WA 98372

PROJECT NO.: –	DATE: 4/29/2021	DRAWN BY: AG	APPROVED BY: AG

SHEET NO. **HP1**

PRCTI20220562

City of Puyallup
Development & Permitting Services
ISSUED PERMIT

Building	Planning
Engineering	Public Works
Fire	Traffic

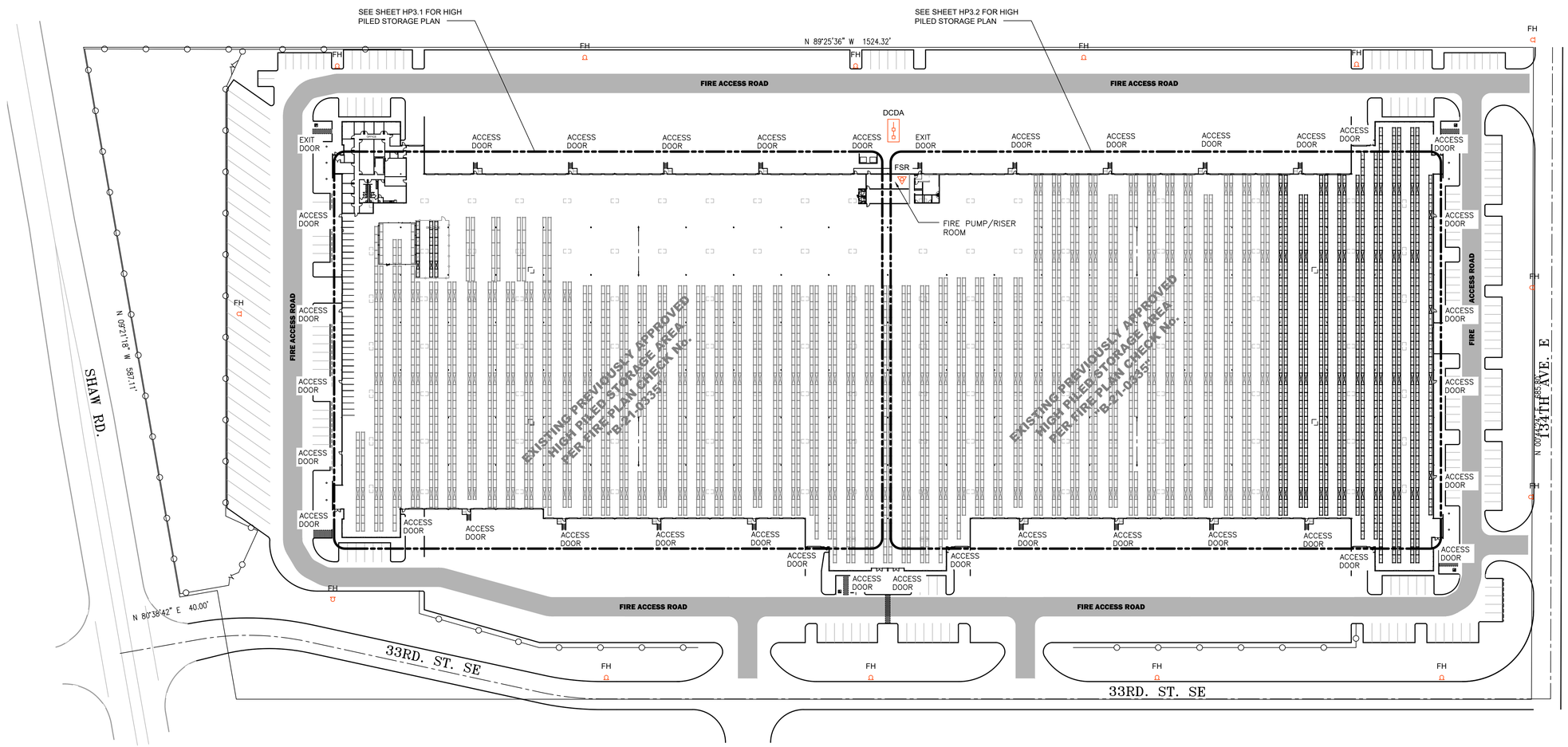

NORTH

FIRE APPARATUS SITE PLAN

SCALE: 1"=60'

FIRE LEGEND

	DCDA	DOUBLE BACKFLOW ASSEMBLY IN VAULT
	FSR	FIRE RISER
	FH	PRIVATE FIRE HYDRANT

ANY HIGH PILED STORAGE AS DEFINED BY THE CFC OUTSIDE OF THE PROPOSED SCOPE OF WORK IS NOT A PART OF THIS SUBMITTAL AND WILL REQUIRE A SEPARATE HIGH PILED STORAGE PERMIT BY THE FIRE DEPARTMENT.

SAL E. FATEEN
STATE OF WASHINGTON
53397
REGISTERED
PROFESSIONAL ENGINEER

EXPIRES
04-12-2022

TRIAD FIRE CONSULTANTS
10 Hughes #A207, Irvine, CA 92618
(909) 393-9477 o | (909) 393-9476 f | support@highpiledstorage.com

REVISIONS / ISSUE

#	DATE	
1	3/07/2022	CLIENT RACK ADDITION
2	3/24/2022	CLIENT RACK ELEVATIONS ADDITION

PLAN TITLE:
FIRE APPARATUS SITE PLAN

PROJECT INFO:
LIFE SCIENCE LOGISTICS
302 33RD STREET SE
PUYALLUP, WA 98372

PROJECT NO.: –	DATE: 4/29/2021	DRAWN BY: AG	APPROVED BY: AG

SHEET NO.
HP2

PRCTI20220562

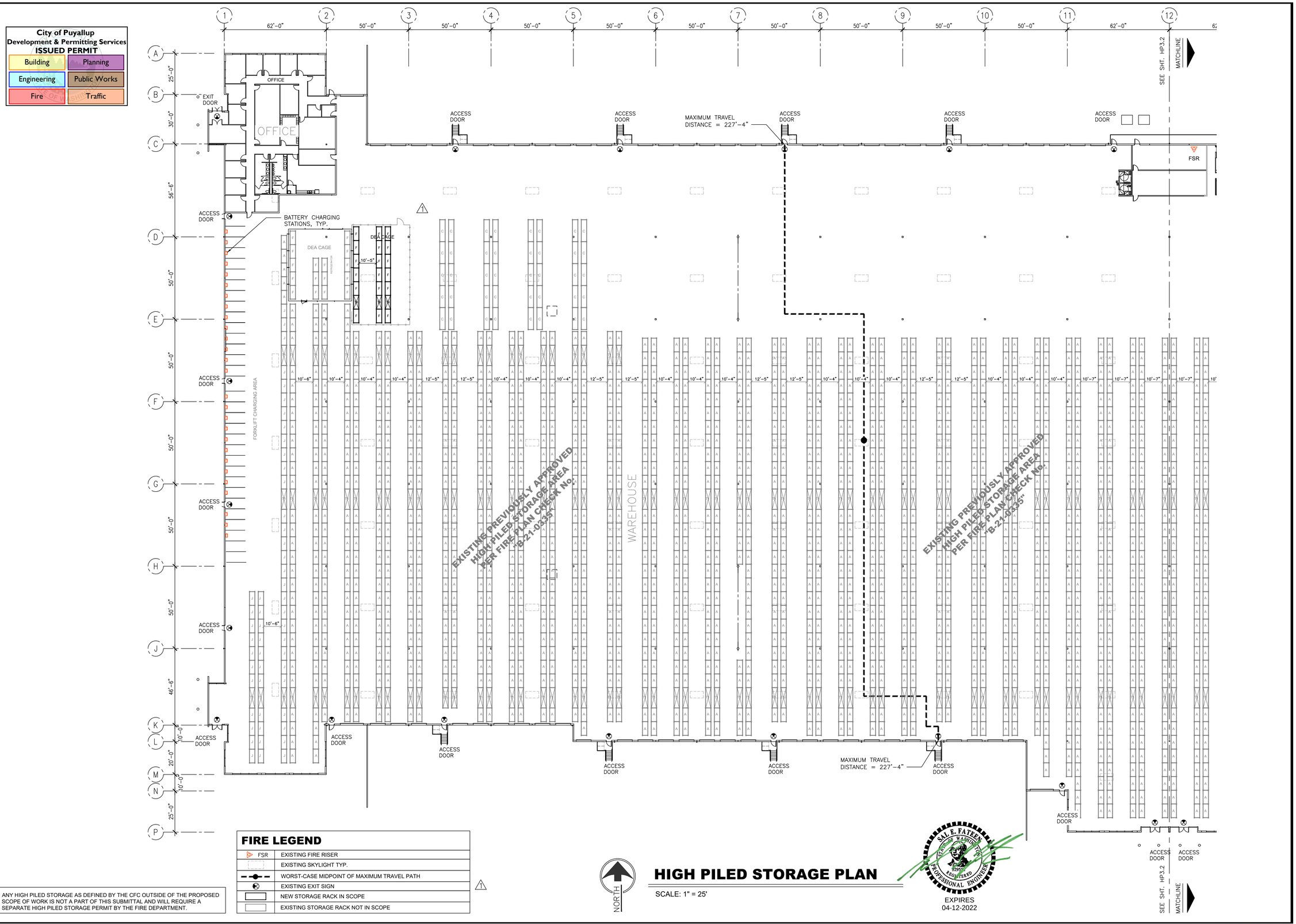

FIRE LEGEND

FSR	EXISTING FIRE RISER
	EXISTING SKYLIGHT TYP.
	WORST-CASE MIDPOINT OF MAXIMUM TRAVEL PATH
	EXISTING EXIT SIGN
	NEW STORAGE RACK IN SCOPE
	EXISTING STORAGE RACK NOT IN SCOPE

ANY HIGH PILED STORAGE AS DEFINED BY THE CFC OUTSIDE OF THE PROPOSED SCOPE OF WORK IS NOT A PART OF THIS SUBMITTAL AND WILL REQUIRE A SEPARATE HIGH PILED STORAGE PERMIT BY THE FIRE DEPARTMENT.

HIGH PILED STORAGE PLAN

SCALE: 1" = 25'

SAL E. FATEEN
STATE OF WASHINGTON
42952
REGISTERED PROFESSIONAL ENGINEER
EXPIRES
04-12-2022

TRIAD FIRE CONSULTANTS
10 Hughes #A207, Irvine, CA 92618
(909) 393-9477 o | (909) 393-9476 f | support@highpiledstorage.com

#	DATE	REVISIONS / ISSUE
1	3/07/2022	CLIENT RACK ADDITION
2	3/24/2022	CLIENT RACK ELEVATIONS ADDITION

PLAN TITLE:
HIGH PILED STORAGE PLAN

PROJECT INFO:
LIFE SCIENCE LOGISTICS
302 33RD STREET SE
PUYALLUP, WA 98372

PROJECT NO.: –
DATE: 4/29/2021
DRAWN BY: AG
APPROVED BY: AG

SHEET NO.
HP3.1

PRCTI20220562

City of Puyallup
Development & Permitting Services
ISSUED PERMIT

Building	Planning
Engineering	Public Works
Fire	Traffic

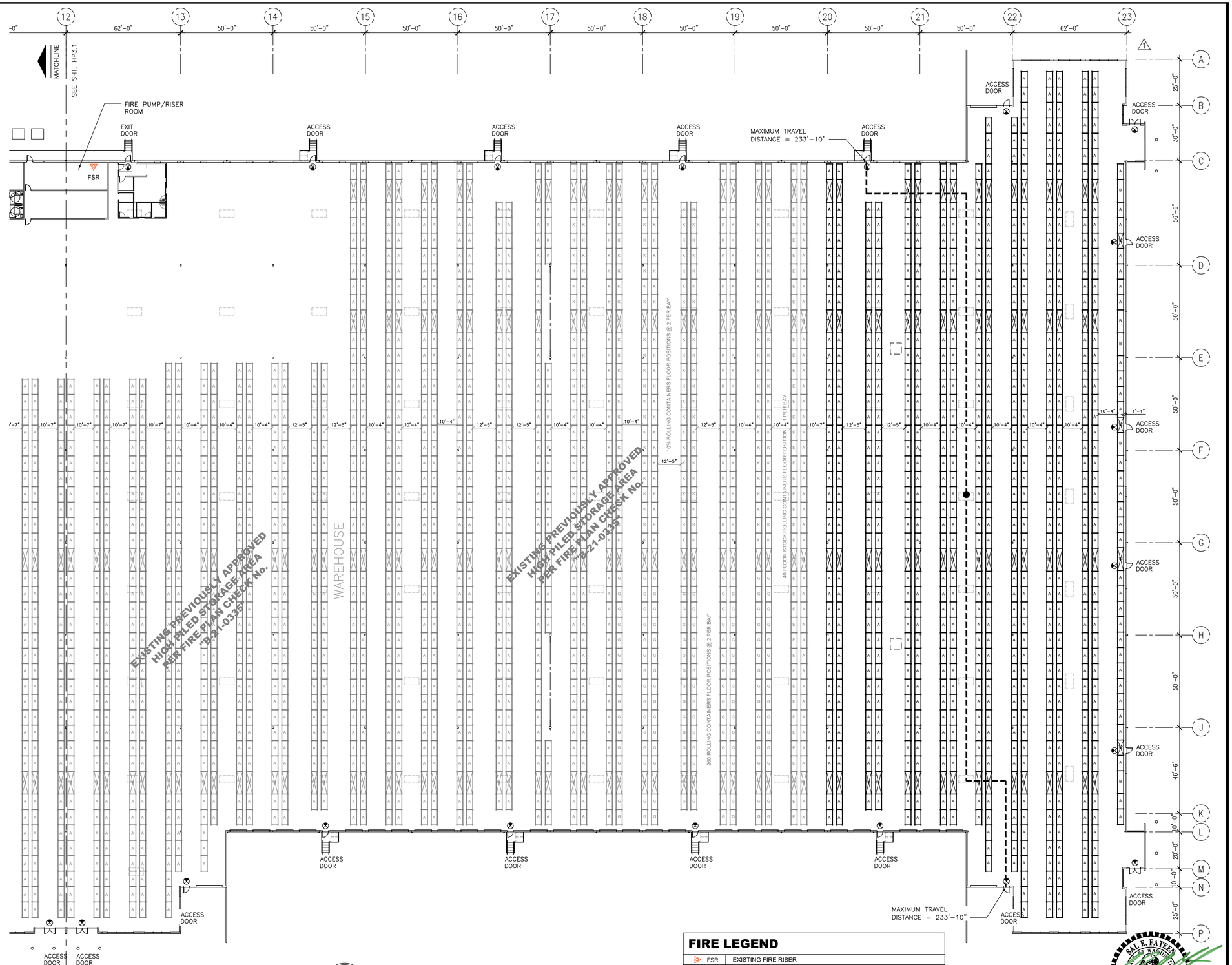

ANY HIGH PILED STORAGE AS DEFINED BY THE CFC OUTSIDE OF THE PROPOSED SCOPE OF WORK IS NOT A PART OF THIS SUBMITTAL AND WILL REQUIRE A SEPARATE HIGH PILED STORAGE PERMIT BY THE FIRE DEPARTMENT.

NORTH

HIGH PILED STORAGE PLAN

SCALE: 1" = 25'

FIRE LEGEND

FSR	EXISTING FIRE RISER
	EXISTING SKYLIGHT TYP.
	WORST-CASE MIDPOINT OF MAXIMUM TRAVEL PATH
	EXISTING EXIT SIGN
	NEW STORAGE RACK IN SCOPE
	EXISTING STORAGE RACK NOT IN SCOPE

SAL E. FATEEN
STATE OF WASHINGTON
40922
REGISTERED PROFESSIONAL ENGINEER
EXPIRES
04-12-2022

TRIAD FIRE CONSULTANTS
10 Hughes #A207, Irvine, CA 92618
(909) 393-9477 o | (909) 393-9476 f | support@highpiledstorage.com

#	DATE	REVISIONS / ISSUE
1	3/07/2022	CLIENT RACK ADDITION
2	3/24/2022	CLIENT RACK ELEVATIONS ADDITION

PLAN TITLE:
HIGH PILED STORAGE PLAN

PROJECT INFO:
LIFE SCIENCE LOGISTICS
302 33RD STREET SE
PUYALLUP, WA 98372

PROJECT NO:	DATE:	DRAWN BY:	APPROVED BY:
–	4/29/2021	AG	AG

SHEET NO.
HP3.2

PRCTI20220562

City of Puyallup
Development & Permitting Services
ISSUED PERMIT

Building	Planning
Engineering	Public Works
Fire	Traffic

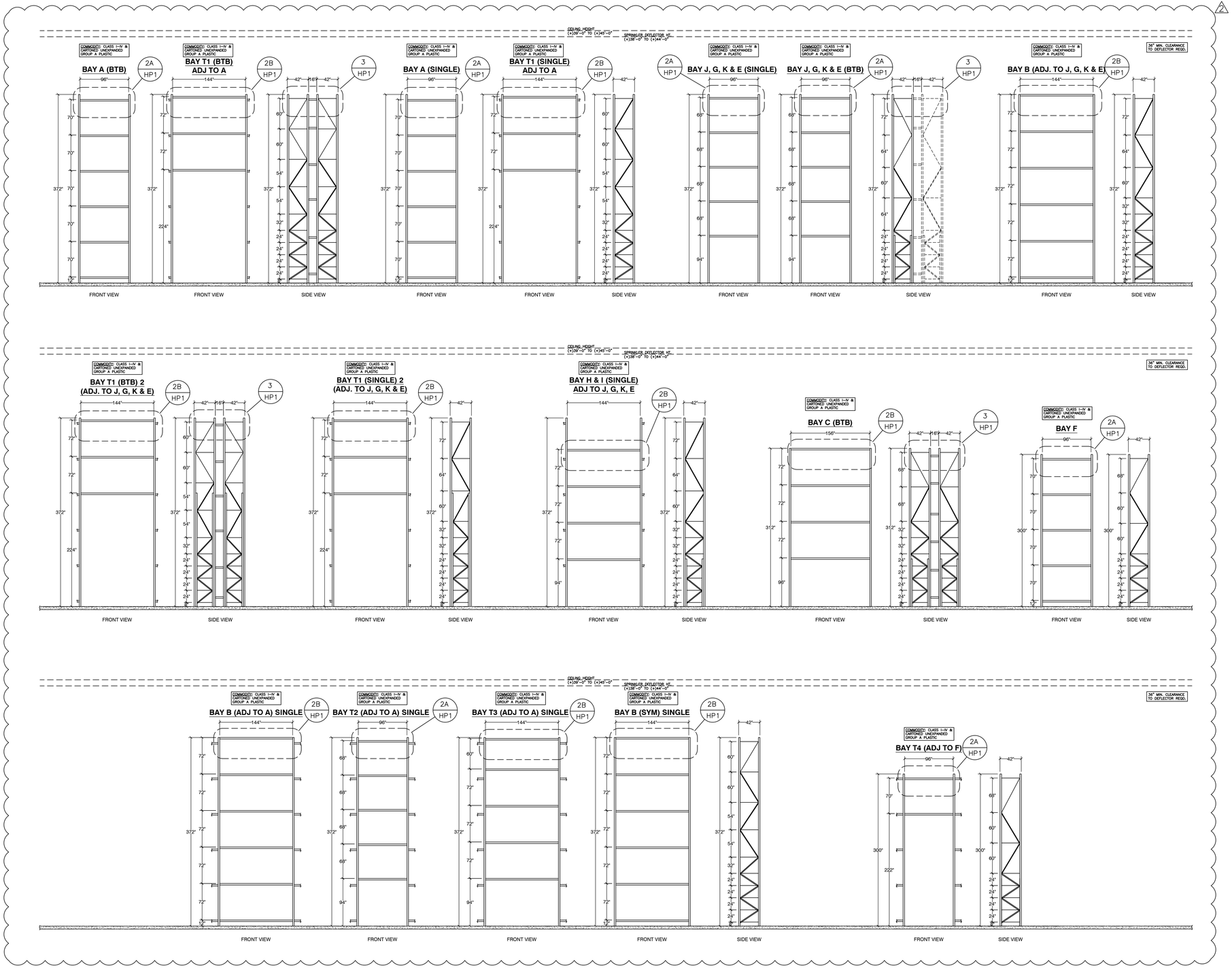

EXPIRES
04-12-2022

TRIAD FIRE CONSULTANTS
10 Hughes #A207, Irvine, CA 92618
(909) 393-9477 o | (909) 393-9476 f | support@highpiledstorage.com

#	DATE	REVISIONS / ISSUE
1	3/07/2022	CLIENT RACK ADDITION
2	3/24/2022	CLIENT RACK ELEVATIONS ADDITION

PLAN TITLE:
HIGH PILED STORAGE ELEVATIONS

PROJECT INFO:
LIFE SCIENCE LOGISTICS
302 33RD STREET SE
PUYALLUP, WA 98372

PROJECT NO:	DATE:	DRAWN BY:	APPROVED BY:
–	4/29/2021	AG	AG

SHEET NO.
HP4

PRCTI20220562