PRCNC20240216

PRCNC20241049
PRCNC20241050
PRCNC20241051
PRCNC20241052



In accordance with Puyallup Municipal Code 11.08.135 this project is required to make improvements to any street frontage that is damaged or that no longer meets current City or ADA design standard. Building occupancy will not be granted until the installation is completed and a final approval granted

In accordance to Puyallup Municipal Code 14.02.220(3) this project is required to install a double detector check valve assembly (DDCVA). Building occupancy will not be granted until the installation is completed and a final approval granted.

Sediment control and erosion procedures shall be practiced eliminating and preventing off site damage. Stormwater runoff originating upgrade of exposed areas shall be controlled to reduce erosion and sediment loss during the period of exposure. See civil permit PRCCP20240215 for specifications

Roof downspout control is required. Steps shall be taken to prevent drainage onto adjacent lots. See civil permit PRCCP20240215 for specifications

Call Before You Dig. It's the law.
Locate all utilities prior to starting work
Dial 811 or call 1-800-424-5555.

City of Puyallup
Development Engineering
APPROVED

See permit for additional requirements.

Linda Lian
06/12/2024
3:27:15 PM

PSE OPERATIONAL TRAINING CENTER

Approval of submitted plans is not an approval of omissions or oversights by this office or non compliance with any applicable regulations of local government. The contractor is responsible for making sure that the building complies with all applicable codes and regulations of the local government.

The approved construction plans, documents, and all engineering must be posted on the job at all inspections in a visible and readily accessible location.

Full sized legible color plans are required to be provided by the permitee on site for inspection.

City of Puyallup
Building
REVIEWED FOR COMPLIANCE
BSnowden
06/13/2024
11:54:28 AM

City of Puyallup
Development & Permitting Services
ISSUED PERMIT

Building	Planning
Engineering	Public Works
Fire	Traffic

PUYALLUP, WA

100% CD SET

01-26-2024

ZERVAS

1/25/2024 4:09:57 PM

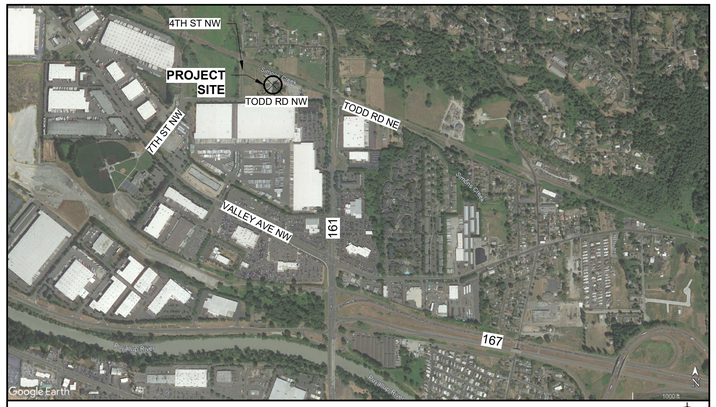

VICINITY MAP

NOT TO SCALE

NORTH

SITE INFORMATION

SITE ADDRESS:	325 TODD ROAD NW PUYALLUP, WA 98371
PARCEL #	0420211030
LEGAL DESCRIPTION:	THAT PORTION OF THE WILLIAM BENSTON DONATION LAND CLAIM NO. 47 IN SECTIONS 16 AND 21, TOWNSHIP 20 NORTH, RANGE 4 EAST OF THE W.M., IN PIERCE COUNTY, WASHINGTON, LYING SOUTHERNLY OF CHICAGO, MILWAUKEE & ST. PAUL RAILROAD RIGHT OF WAY AND LYING WESTERLY OF NORTH MERIDIAN (AKA SR 161) AND LYING NORTHERLY OF TODD ROAD NORTHWEST (AKA 23RD AVENUE NORTHWEST) AND LYING EASTERLY OF THAT 15 FOOT STRIP CONVEYED TO PIERCE COUNTY FOR ROAD PURPOSES (4TH STREET NORTHWEST, AKA DESHAUX LANE) NY DEED RECORDED UNDER RECORDING NO. 1783507.
SITE SIZE:	6.17 ACRES
IMPERVIOUS SURFACE:	154,965 SF

PROJECT DESCRIPTION

THE PROPOSED PROJECT IS FOR A NEW OPERATIONAL TRAINING CENTER. THE PROJECT IS COMPOSED OF THE MAIN OTC BUILDING, AND OUTDOOR TRAINING AREA. IT WILL BE USED AS A VOCATIONAL SCHOOL FOR UTILITY FIRST RESPONDERS AND CONSTRUCTION TRADES.

THE OTC BUILDING IS 33,837 SF AND WILL CONSIST OF OFFICE/COMMERCIAL/INSTRUCTIONAL SPACES, AND 8,673 SF OF COVERED AREA.

THE OUTDOOR TRAINING AREA WILL CONSIST OF 2,510 SF OF MULTIPLE ENCLOSED SINGLE STORY STRUCTURES.

SEPARATE PERMITS

- FIRE SPRINKLERS
- FIRE ALARM

OWNER

TC NORTHWEST DEVELOPMENT, INC.
600 UNIVERSITY STREET, SUITE 2912
SEATTLE, WA 98101
CONTACT: ALEX GARCIA MENDOZA

DESIGN TEAM

ARCHITECT :
ZERVAS
209 PROSPECT STREET
BELLINGHAM, WA 98225
PH : 360.734.4744
CONTACT : MATT REEVES

STRUCTURAL ENGINEER :
KINGWORKS CONSULTING ENGINEERS
600 DUPONT STREET
SUITE B
BELLINGHAM, WA 98225
PH : 360.714.8260
CONTACT : DAN LINKHART

MECHANICAL ENGINEER :
MACDONALD-MILLER
17930 INTERNATIONAL BLVD, SUITE 120
SEATAC, WA 98188
PH : 206.768.3838
CONTACT : BROCK LEE

ELECTRICAL ENGINEER :
COFFMAN ENGINEERS, INC.
1101 2ND AVE, SUITE 400
SEATTLE, WA 98101
PH : 206.521.0736
CONTACT : CHRIS BARKER

CIVIL ENGINEER :
FREELAND & ASSOCIATES
2500 ELM STREET
BELLINGHAM, WA 98225
PH : 360.650.1408
CONTACT : MILES MCEATHRON

LANDSCAPE ARCHITECT :
PACIFIC LANDSCAPE ARCHITECTURE
1814 BROADWAY STREET
BELLINGHAM, WA 98225
PH: 360.684.4295
CONTACT: SUSAN WILLHOFT

ARCHITECTURAL SYMBOLS

CENTERLINE

NORTH ARROWS — PLAN NORTH / TRUE NORTH

GRID HEAD — 0

WALL TAG — 1t / 1t

FLOOR TAG — 1t / 1t

ROOF TAG — X / X

CEILING TAG — 1t / 1t, 1' - 0" A.F.F. / 1' - 0" A.F.F.

DOOR TAG — 101 / 00 — DOOR # / HARDWARE GROUP

WINDOW TAG — X

RELITE TAG — X

ROOM TAGS — Room name / 101; Room name / 101 / W | S — INTERIOR PLANS

EXTERIOR CLADDING TAG

INTERIOR MATERIAL TAG — x

EXTERIOR ELEVATION TAG — 22 / 22 A8_16 22 / 22

INTERIOR ELEVATION TAG — 22 / 22 A8_16 22 / 22

INTERIOR CABINET TAG — X — CASEWORK # / X X X — WIDTH / HEIGHT / DEPTH

ARCHITECTURAL ABBREVIATIONS

&	AND
AB	AIR BARRIER
ACT	ACOUSTICAL CEILING TILE
AFF	ABOVE FINISHED FLOOR
AHU	AIR HANDLING UNIT
ALT	ALTERNATE
ALUM	ALUMINUM
AV	AUDIO / VISUAL
BR&S	BACKER ROD AND SEALANT
BSMT	BASEMENT
BR	BEDROOM
BLKG	BLOCKING
BOT	BOTTOM
BO	BOTTOM OF
BLDG	BUILDING
CPT	CARPET
CT	CERAMIC TILE
CL	CENTER LINE
CLG	CEILING
CLR	CLEAR
COL	COLUMN
CONC	CONCRETE
CMU	CONCRETE MASONRY UNIT
CONT	CONTINUOUS
CI	CONTINUOUS INSULATION
CJ	CONTROL JOINT
CFCI	CONTRCTOR FURNISHED, CONTRACTOR INSTALLED
DEMO	DEMOLISH OR DEMOLITION
DTL	DETAIL
DIA	DIAMETER
DIM(S)	DIMENSION(S)
DW	DISHWASHER
DN	DOWN
DS	DOWNSPOT
DR	DOOR
DWG	DWG
EA	EACH
ELEC	ELECTRICAL
ELEV	ELEVATION OR ELEVATOR
EQ	EQUAL
(E)	EXISTING
EXIST	EXISTING
EJ	EXPANSION JOINT
EXT	EXTERIOR
FO	FACE OF
FOC	FACE OF CONCRETE
FOF	FACE OF FINISH
FOM	FACE OF MASONRY
FOS	FACE OF STUD
FC	FIBER CEMENT
FFL	FINISHED FLOOR ELEVATION
FE	FIRE EXTINGUISHER
FEC	FIRE EXTINGUISHER CABINET
FF	FINISHED FACE OR FINISHED FLOOR
FRT	FIRE RETARDANT TREATED
FIN	FINISH
FLR	FLOOR
FD	FLOOR DRAIN
FTG	FOOTING
GALV	GALVANIZED
GA	GAUGE
GC	GENERAL CONTRACTOR
GLB	GLUE LAMINATED BEAM
GWB	GYPSUM WALLBOARD
HM	HOLLOW METAL
HB	HOSE BIB
HR	HOUR
HSS	HOLLOW STEEL SECTION
ILO	IN LIEU OF
INSUL	INSULATION OR INSULATED
ID	INSIDE DIAMETER
INT	INTERIOR
LAV	LAVATORY
LF	LINEAL FEET
MAX	MAXIMUM
MFR	MANUFACTURER
MO	MASONRY OPENING
MECH	MECHANICAL
MTL	METAL
MIN	MINIMUM
MISC	MISCELLANEUS
NFVA	NET FREE VENTILATION AREA
(N)	NEW
NA	NOT APPLICABLE
NIC	NOT IN CONTRACT
NTS	NOT TO SCALE
OC	ON CENTER
OPP	OPPOSITE
OH	OPPOSITE HAND OR OVERHEAD
OTO	OUT TO OUT
OTS	OPEN TO STRUCTURE
OD	OUTSIDE DIAMETER
ORWL	OVERFLOW RAINWATER LEADER
ORD	OVERFLOW ROOF DRAIN
OFCC	OWNER FURNISHED, CONTRACTOR COORDINATED
OFCI	OWNER FURNISHED, CONTRACTOR INSTALLED
OFOI	OWNER FURNISHED, OWNER INSTALLED
PNT	PAINT
PERF	PERFORATED
PLAM	PLASTIC LAMINATE
PLYWD	PLYWOOD
PT	PRESSURE TREATED
RWL	RAINWATER LEADER
REF	REFERENCE
RCP	REFLECTED CEILING PLAN
REQD	REQUIRED
REV	REVISION
R	RISER
RD	ROOF DRAIN
RM	ROOM
RO	ROUGH OPENING
SCHED	SCHEDULE
SAM	SELF-ADHERED MEMBRANE
SHT	SHEET
SIM	SIM
SOG	SLAB ON GRADE
SC	SOLID CORE
SPEC	SPECIFICATION
SQ	SQUARE
SF	SQUARE FEET
SS	STAINLESS STEEL
STL	STEEL
STRUCT	STRUCTURAL
T&G	TONGUE AND GROOVE
TO	TOP OF
TOB	TOP OF BEAM
TOC	TOP OF CONCRETE
TOJ	TOP OF JOIST
TOP	TOP OF PLYWOOD
TOSOG	TOP OF SLAB ON GRADE
TOS	TOP OF STEEL
TOTS	TOP OF TOPPING SLAB
T	TREAD
TS	TUBE STEEL
TYP	TYP
UNO	UNLESS NOTED OTHERWISE
VB	VAPOR BARRIER
VIF	VERIFY IN FIELD
VG	VERTICAL GRAIN
VCT	VINYL COMPOSITION TILE
WC	WATER CLOSET
WH	WATER HEATER
WRB	WEATHER RESISTIVE BARRIER
WWF	WELDED WIRE FABRIC
WWM	WELDED WIRE MESH
WF	WIDE FLANGE
W/	WITH
W/O	WITHOUT
WD	WOOD

PRCNC20240216

ZERVAS
209 PROSPECT STREET - BELLINGHAM, WA 98225
p.360.734.4744 - zervasgroup.com

9587 REGISTERED ARCHITECT
ANDREW J. KRZYSIEK
STATE OF WASHINGTON

City of Puyallup
Development & Permitting Services
ISSUED PERMIT
Building | Planning | Engineering | Public Works | Fire | Traffic

100% CD SET

REV	ISSUED FOR	DATE

NORTH. PLAN.

SCALE. 1/4" = 1'-0"

PSE OPERATIONAL TRAINING CENTER

PROJECT INFORMATION

PROJECT#.			202202.06
DRAWN.	MR	CHECK.	AK
ISSUED.			01/26/24

G0.01

202202.06
Autodesk Docs://7222 - 5111 - PSE North Bend Precon Design/PSE-OTC_Current.rvt

1/25/2024 4:09:58 PM

DRAWING INDEX

GENERAL

G0.00 : COVER
G0.01 : PROJECT INFORMATION
G0.02 : DRAWING INDEX AND CODE ANALYSIS
G0.03 : LIFE SAFETY PLAN - OTC BUILDING
G0.04 : ASSEMBLIES
G0.05 : WASHINGTON STATE ENERGY CODE - OTC BUILDING
G0.06 : WASHINGTON STATE ENERGY CODE - OTC BUILDING

CIVIL (SEPARATE PERMIT)

C0.0 : CIVIL COVER SHEET
C0.1 : OVERALL EXISTING CONDITIONS
C0.2 : OVERALL IMPROVEMENT PLAN
PRIVATE IMPROVEMENTS
C1.0 : SITE PLAN
C1.1A : EARLIER PHASES TESC & SURCHARGE PLAN
C1.1B : LATER PHASES TESC PLAN
C1.1 : TESC PLAN
C1.2 : WATER & SEWER PLAN
C1.3A : DRAINAGE PLAN
C1.3B : DRAINAGE PLAN
C1.3C : DRAINAGE PLAN
C1.4A : GRADING & PAVING PLAN
C1.4B : GRADING & PAVING PLAN
C1.4C : GRADING & PAVING PLAN
C1.5 : SUB-STATION CONTAINMENT PLAN
C1.6 : TRAINING VILLAGE UTILITY PLAN
PUBLIC IMPROVEMENTS
C2.0 : FRONTAGE PLAN & SHEET LAYOUT
C2.1 : TESC PLAN
C2.2A : SEWER PLAN & PROFILE (7TH ST NW)
C2.2B : SEWER PLAN & PROFILE (7TH ST NW)
C2.2C : SEWER PLAN & PROFILE (TODD RD NW)
C2.2D : SEWER PLAN & PROFILE (TODD RD NW)
C2.2E : WATER & SEWER PLAN & PROFILE (TODD RD NW)
C2.2F : WATER PLAN & PROFILE (TODD RD NW)
C2.2G : WATER PLAN & PROFILE (TODD RD NW)
C2.3D : ROAD & DRAINAGE PLAN & PROFILE (TODD RD NW)
C2.3E : ROAD & DRAINAGE PLAN & PROFILE (TODD RD NW)
C2.3F : ROAD & DRAINAGE PLAN & PROFILE (TODD RD NW)
C2.3G : ROAD & DRAINAGE PLAN & PROFILE (TODD RD NW)
DETAILS & NOTES
C3.1 : TESC NOTES & DETAILS
C3.2 : SANITARY SEWER DETAILS
C3.3 : WATER DETAILS
C3.4 : WATER DETAILS
C3.5 : DRAINAGE DETAILS
C3.6 : DRAINAGE DETAILS
C3.7 : DRAINAGE DETAILS
C3.8 : STORMWATER MANAGEMENT DETAILS
C3.9 : PAVING DETAILS
C3.10 : PAVING DETAILS
C3.11 : PAVING DETAILS
C3.12 : SITE DETAILS
C3.13 : SITE SECTION & DETAIL GRADING
C3.14 : GENERAL NOTES

LANDSCAPE (SEPARATE PERMIT)

L1.0 : LANDSCAPE SITE PLAN
L1.1 : PLANTING PLAN WEST
L1.2 : PLANTING PLAN CENTRAL
L1.3 : PLANTING PLAN EAST
L1.4 : PLANT SCHEDULE
L2.1 : DETAIL SHEET
L2.2 : DETAIL SHEET
L2.3 : DETAIL SHEET
L2.4 : DETAIL SHEET
IR1.1 : IRRIGATION PLAN WEST
IR1.2 : IRRIGATION PLAN CENTRAL
IR1.3 : IRRIGATION PLAN EAST
IR1.4 : IRRIGATION SCHEDULES
IR2.1 : IRRIGATION DETAILS

ARCHITECTURAL

A1.01 : OVERALL SITE PLAN
A1.02 : OUTDOOR TRAINING SITE PLAN
A2.00 : OTC BUILDING OVERALL FLOOR PLAN
A2.10 : OTC BUILDING OVERALL ROOF PLAN
A2.20 : OTC BUILDING ENLARGED FLOOR PLAN
A2.21 : OTC BUILDING ENLARGED FLOOR PLAN
A2.22 : OUTDOOR TRAINING CONTROL HOUSE PLANS, CODE, SCHED
A2.23 : OUTDOOR TRAINING PLANS AND DOOR SCHEDULE
A2.30 : OTC BUILDING ENLARGED RCP
A2.31 : OTC BUILDING ENLARGED RCP
A2.50 : ENLARGED RESTROOM PLANS
A3.00 : EXTERIOR ELEVATIONS
A3.01 : EXTERIOR ELEVATIONS
A3.02 : EXTERIOR ELEVATIONS - OUTDOOR TRAINING
A3.03 : DOOR SCHEDULE - OTC BUILDING
A3.04 : WINDOW SCHEDULE
A4.00 : BUILDING SECTIONS
A4.01 : BUILDING SECTIONS
A4.02 : WALL SECTIONS
A4.03 : WALL SECTIONS
A4.04 : WALL SECTIONS
A4.05 : WALL SECTIONS
A4.06 : WALL SECTION - OUTDOOR TRAINING
A5.00 : INTERIOR FINISH DATA
A5.01 : FINISH SCHEDULE
A5.02 : OTC BUILDING ENLARGED FINISH PLAN
A5.03 : OTC BUILDING ENLARGED FINISH PLAN
A6.01 : INTERIOR ELEVATIONS
A6.02 : INTERIOR ELEVATIONS
A6.03 : INTERIOR ELEVATIONS
A6.04 : INTERIOR ELEVATIONS
A6.05 : INTERIOR ELEVATIONS
A6.06 : INTERIOR ELEVATIONS

DRAWING INDEX - CONTINUED

ARCHITECTURAL - CONTINUED

A6.07 : INTERIOR ELEVATIONS
A6.08 : INTERIOR ELEVATIONS
A6.09 : INTERIOR ELEVATIONS
A6.10 : INTERIOR ELEVATIONS
A6.11 : INTERIOR ELEVATIONS
A6.12 : INTERIOR ELEVATIONS
A6.13 : INTERIOR ELEVATIONS
A6.14 : INTERIOR ELEVATIONS
A6.15 : INTERIOR ELEVATIONS
A6.16 : INTERIOR ELEVATIONS
A6.17 : INTERIOR ELEVATIONS
A6.18 : INTERIOR ELEVATIONS
A7.01 : EXTERIOR DETAILS
A7.02 : EXTERIOR DETAILS
A7.03 : EXTERIOR DETAILS
A7.04 : EXTERIOR DETAILS
A7.05 : EXTERIOR DETAILS - OUTDOOR TRAINING
A7.06 : EXTERIOR DETAILS - OUTDOOR TRAINING
A8.01 : INTERIOR DETAILS
A8.02 : INTERIOR DETAILS
A8.03 : INTERIOR DETAILS

STRUCTURAL

S0.01 : STRUCTURAL NOTES
S0.02 : STRUCTURAL NOTES
S0.03 : STRUCTURAL NOTES
S0.04 : SEISMIC QC/QA REQMTS
S1.00 : OUTDOOR TRAINING SITE STRUCTURES - OVERVIEW PLAN
S1.01 : SITE STRUCTURES
S1.02 : SITE STRUCTURES
S1.03 : SITE STRUCTURES
S2.01 : FOUNDATION and MAIN FLOOR FRAMING PLAN -SOUTH
S2.02 : FOUNDATION and MAIN FLOOR FRAMING PLAN -NORTH
S2.03 : ROOF FRAMING PLAN - SOUTH
S2.04 : ROOF FRAMING PLAN - NORTH
S3.01 : BRACED FRAME ELEVATIONS
S3.02 : BRACED FRAME ELEVATIONS
S3.03 : BRACED FRAME ELEVATIONS
S4.01 : FOUNDATION DETAILS
S4.02 : FOUNDATION DETAILS
S4.03 : FOUNDATION DETAILS
S4.04 : FOUNDATION DETAILS
S4.05 : STEEL DETAILS
S4.06 : ROOF DETAILS
S4.07 : ROOF DETAILS
S4.08 : ROOF DETAILS
S4.09 : MISC DETAILS
S4.10 SFRS DETAILS
S4.11 SFRS DETAILS
S5.01 SITE STRUCTURE DETAILS
S5.02 SITE STRUCTURE DETAILS
S5.03 SITE STRUCTURE DETAILS
S5.04 SITE STRUCTURE DETAILS
S6.01 EQUIPMENT PADS - FOUNDATION / ELEVATIONS AND DETAILS
S6.02 EQUIPMENT PADS - FOUNDATION / ELEVATIONS AND DETAILS
S6.03 EQUIPMENT PADS - FOUNDATION / ELEVATIONS AND DETAILS
S6.04 EQUIPMENT PADS - FOUNDATION / ELEVATIONS AND DETAILS

MECHANICAL

P0.01 : SCHEDULES - PLUMBING
P0.02 : SCHEDULES - PLUMBING
P0.03 : SCHEDULES - PLUMBING
P1.00 : SITE PLAN - PLUMMING
P1.01 : UNDERGROUND - PLUMBING
P1.01A : UNDERGROUND SECTOR PLAN - PLUMBING
P1.01B : UNDERGROUND SECTOR PLAN - PLUMBING
P1.01C : UNDERGROUND SECTOR PLAN - PLUMBING
P1.01D : UNDERGROUND SECTOR PLAN - PLUMBING
P2.02 : 1ST FLOOR PLAN - PLUMBING
P2.02A : 1ST FLOOR SECTOR PLAN - PLUMBING
P2.02B : 1ST FLOOR SECTOR PLAN - PLUMBING
P2.02C : 1ST FLOOR SECTOR PLAN - PLUMBING
P2.02D : 1ST FLOOR SECTOR PLAN - PLUMBING
P4.01 : DOMESTIC WATER RISER DIAGRAM
P4.02 : WASTE & VENT RISER DIAGRAM
P4.03 : COMPRESSED AIR RISER DIAGRAM
P6.03 : PLUMBING DETAILS

M0.01 : SCHEDULES
M0.01S : SITE PLAN - HVAC
M0.02 : SCHEDULES
M0.03 : SCHEDULES
M0.04 : SCHEDULES
M0.05 : SCHEDULES
M2.01 : 1ST FLOOR PLAN - HVAC
M2.01A : 1ST FLOOR SECTOR A PLAN - HVAC
M2.01B : 1ST FLOOR SECTOR B PLAN - HVAC
M2.01C : 1ST FLOOR SECTOR C PLAN - HVAC
M2.01D : 1ST FLOOR SECTOR D PLAN - HVAC
M2.02 : ROOF PLAN - HVAC
M4.01 : APPLIANCE LAB - SECTIONS
M6.01 : DETAILS HVAC
MP0.01S : SITE PLAN - FITTING
MP2.01 : 1ST FLOOR PLAN - FITTING
MP2.01A : 1ST FLOOR SECTOR A PLAN - FITTING
MP2.01B : 1ST FLOOR SECTOR B PLAN - FITTING
MP2.01C : 1ST FLOOR SECTOR C PLAN - FITTING
MP2.01D : 1ST FLOOR SECTOR D PLAN - FITTING
MP2.02 : ROOF PLAN - FITTING
MP4.01 : VRF DIAGRAMS - FITTING
MP4.02 : SPLIT SYSTEM DIAGRAMS - FITTING
MP4.03 : NATURAL GAS RISER DIAGRAM - FITTING
MP6.01 : DETAILS - FITTING

DRAWING INDEX - CONTINUED

FIRE PROTECTION (SEPARATE PERMIT)

FP-1 : FIRE PROTECTION PLAN
FP-2 : FIRE PUMP ROOM PLAN & DETAILS

ELECTRICAL

E0.01 : COVER SHEET AND GENERAL INFORMATION
E0.02 : GENERAL NOTES
E0.03 : LUMINAIRE SCHEDULE
E0.04 : MECHANICAL EQUIPMENT CONNECTION SCHEDULE
E0.05 : NREC
E0.06 : NREC
E0.07 : NREC - CONTROL BUILDING
E0.08 : NREC - CONTROL BUILDING
E1.01 : OVERALL ELECTRICAL SITE PLAN
E1.02 : PARTIAL ELECTRICAL SITE PLAN
E2.01 : LIGHTING PLAN
E2.02 : LIGHTING PLAN
E3.01 : POWER & SYSTEMS PLAN
E3.02 : POWER & SYSTEMS PLAN
E3.03 : MECHANICAL POWER PLAN
E3.04 : ROOF POWER PLAN
E4.01 : ENLARGED PARTIAL PLANS
E5.01 : ONE-LINE DIAGRAM
E5.02 : ONE-LINE DIAGRAMS
E6.01 : PANEL SCHEDULES
E6.02 : PANEL SCHEDULES
E6.03 : PANEL SCHEDULES
E6.04 : PANEL SCHEDULES
E6.05 : PANEL SCHEDULES
E6.06 : PANEL SCHEDULES
E6.07 : PANEL SCHEDULES
E6.08 : PANEL SCHEDULES
E7.01 : DETAILS

SURVEY

1 OF 4 : SITE-01
2 OF 4 : SITE-02
3 OF 4 : SITE-03
4 OF 4 : SITE-04

2018 IBC ANALYSIS - OTC BUILDING

THE FOLLOWING IS A PARTIAL LISTING OF REQUIREMENTS, ALL APPLICABLE CODES TO APPLY

CHAPTER 3 - USE AND OCCUPANCY CLASSIFICATION:

A. BUSINESS, GROUP B: OFFICE BUILDING AND VOCATIONAL SCHOOL

CHAPTER 5 - GENERAL BUILDING HEIGHTS AND AREAS:

BUILDING TO BE CONSTRUCTION TYPE V-B, SPRINKLERED

A. PER TABLE 504.3 ALLOWABLE BUILDING HEIGHT IN FEET ABOVE GRADE PLANE
1. OCCUPANCY GROUP 'B' ALLOWABLE: 60'-0" PROPOSED: 26'-2"

B. PER TABLE 504.4 ALLOWABLE NUMBER OF STORIES ABOVE GRADE PLANE
1. OCCUPANCY GROUP 'B' ALLOWABLE: 3 STORIES PROPOSED: 1 STORIES

C. PER TABLE 506.2 ALLOWABLE AREA FACTOR IN SQUARE FEET
1. OCCUPANCY GROUP 'B' ALLOWABLE: 36,000 SF PROPOSED: 42,510 SF

D. ALLOWABLE AREA PER SECTION 506.2.1 EQUATION 5-1: Aa = At + (NS X If)

1. ALLOWABLE BUILDING AREA = 36,000 + (9,000 X 0.75) = 42,750 SF
2. PROPOSED BUILDING AREA = 42,510 SF

CHAPTER 6 - TYPES OF CONSTRUCTION:

A. PER TABLE 601 NO FIRE RESISTANCE REQUIREMENTS FOR TYPE 'V-B' BUILDING ELEMENTS.

B. FIRE-RESISTANCE RATING (HRS) OF EXTERIOR WALLS PER TABLE 602
1. FIRE-SEPARATION DISTANCE = ≥10', FIRE RATING REQUIRED = 0

CHAPTER 8 - INTERIOR FINISHES:

A. INTERIOR FINISH REQUIREMENTS BASED ON OCCUPANCY PER TABLE 803.13
1. EXIT ENCLOSURES AND PASSAGEWAYS: B
2. CORRIDORS: C
3. ROOMS AND ENCLOSED SPACES: C

CHAPTER 9 - FIRE PROTECTION SYSTEMS:

A. PER SECTION 906 PORTABLE FIRE EXTINGUISHERS SHALL BE PROVIDED
1. SIZE AND DISTRIBUTION PER TABLE 906.3.(1) LIGHT HAZARD OCCUPANCY
a. MINIMUM RATED SINGLE EXTINGUISHER = 2A
b. MAXIMUM FLOOR AREA PER UNIT OF A = 3,000 SQ.FT.
c. MAXIMUM FLOOR AREA FOR EXTINGUISHER = 11,250 SQ.FT.
d. MAXIMUM TRAVEL DISTANCE TO EXTINGUISHER = 75'

CHAPTER 10 - MEANS OF EGRESS:

A. SECTION 1004 DESIGN OCCUPANT LOAD PER TABLE 1004.5: SEE OCCUPANT LOAD TABLE

B. SECTION 1005.3.2 OTHER EGRESS COMPONENTS
1. EGRESS COMPONENTS: OCCUPANT LOAD SERVED X 0.15
a. PROPOSED MAXIMUM: 122 X 0.15 = 19" REQUIRED, 33" PROVIDED

C. PER TABLE 1006.2.1 SPACES WITH ONE EXIT OR EXIT ACCESS DOORWAY
1. MAXIMUM OCCUPANT LOAD
a. B OCCUPANCY: ALLOWABLE - 49
2. MAXIMUM COMMON PATH OF EGRESS TRAVEL DISTANCE (WITH SPRINKLER SYSTEM)
a. B OCCUPANCY: ALLOWABLE - 100'

D. SECTION 1017 EXIT ACCESS TRAVEL DISTANCE PER TABLE 1017.2
1. B OCCUPANCIES. ALLOWABLE: 300'-0" WITH A SPRINKLER SYSTEM. PROPOSED MAXIMUM: 151'-0"

E. PER TABLE 1020.2 COORIDOR FIRE-RESISTANCE RATING, B OCCUPANCIES WITH AN OCCUPANT LOAD GREATER THAN 30, THAT HAVE A SPRINKLER SYSTEM, ARE REQUIRED TO HAVE A FIRE-RESISTANCE RATING OF 0 HOURS

CHAPTER 11 - ACCESSIBILITY:

A. PER SECTION 1103.2.9
1. SPACES FREQUENTED ONLY BY SERVICE PERSONNEL FOR MAINTENANCE, REPAIR OR OCCASIONAL MONITORING OF EQUIPMENT ARE NOT REQUIRED TO COMPLY WITH THIS CHAPTER.

B. PER TABLE 1106.2 ACCESSIBLE PARKING SPACES
1. 51 TO 75 SPACES REQUIRE 3 ACCESSIBLE STALLS, 68 SPACES ARE PROPOSED.
a. 3 ACCESSIBLE PARKING STALLS ARE PROPOSED.

C. PER SECTION 1106.6 VAN SPACES. FOR EVERY SIX OR FRACTION OF SIX ACCESSIBLE PARKING SPACES, AT LEAST ONE SHALL BE A VAN-ACCESSIBLE PARKING SPACE.
1. 3 ACCESSIBLE PARKING STALLS / 6 = 0.5. 1 VAN SPACE WILL BE PROVIDED

CHAPTER 29 - PLUMBING SYSTEMS:

A. SECTION 2902.1.1 FIXTURE CALCULATIONS.
1. TOTAL OCCUPANT LOAD = 494. 494 / 2 = 247, HALF OF OCCUPANT LOAD

B. MIN. NUMBER OF REQUIRED PLUMBING FIXTURES FROM THE WASHINGTON STATE AMENDMENTS PER TABLE 2902.1 AND 2902.5.1.
1. WATERCLOSETS, GROUP B: 1 PER 25 FOR THE FIRST 50, 1 PER 50 FOR REMAINING
a. MALE WATERCLOSETS: 2 + [(247-50)/50] = 6 REQUIRED, 6 PROVIDED
b. FEMALE WATERCLOSETS: 2 + [(247-50)/50] = 6 REQUIRED, 6 PROVIDED
2. LAVATORIES, GROUP B: 1 PER 40 FOR THE FIRST 80, 1 PER 80 FOR REMAINING
a. MALE LAVATORIES: 2 + [(247-80)/80] = 5 REQUIRED, 5 PROVIDED
b. FEMALE LAVATORIES: 2 + [(247-80)/80] = 5 REQUIRED, 5 PROVIDED
3. DRINKING FOUNTAINS: 1 PER 150 FOR THE FIRST 150, 1 PER 500 FOR REMAINING
a. 495 OCCUPANTS: 1 + [(494-150)/500] = 2 REQUIRED, 2 PROVIDED
C. PER TABLE 2902.1 MINIMUM NUMBER OF REQUIRED PLUMBING FIXTURES
1. SERVICE SINK, GROUP B: 1 REQUIRED, 1 PROVIDED

ADDITIONAL REQUIREMENTS:

A. THE STRUCTURE WILL REQUIRE AN EMERGENCY RESPONDER RADIO ANALYSIS TO BE CONDUCTED (IFC 510). ANY DEFICIENCIES FOUND WILL NEED TO BE CORRECTED PRIOR TO CERTIFICATE OF OCCUPANCY ISSUANCE.

PRCNC20240216

ZERVAS
209 PROSPECT STREET - BELLINGHAM, WA 98225
p.360.734.4744 - zervasgroup.com

9587 REGISTERED ARCHITECT
ANDREW J. KRZYSIEK
STATE OF WASHINGTON

City of Puyallup
Development & Permitting Services
ISSUED PERMIT
Building | Planning | Engineering | Public Works | Fire | Traffic

100% CD SET

REV	ISSUED FOR	DATE

NORTH. PLAN.
SCALE.

PSE OPERATIONAL TRAINING CENTER

DRAWING INDEX AND CODE ANALYSIS

PROJECT#: 202202.06
DRAWN: MR CHECK: AK
ISSUED: 01/26/24

G0.02

202202.06
Autodesk Docs://7222 - 5111 - PSE North Bend Precon Design/PSE-OTC_Current.rvt

1/25/2024 4:10:02 PM

PRCNC20240216

ZERVAS
209 PROSPECT STREET - BELLINGHAM, WA 98225
p.360.734.4744 - zervasgroup.com

9587 REGISTERED ARCHITECT
ANDREW J. KRZYSIEK
STATE OF WASHINGTON

City of Puyallup
Development & Permitting Services
ISSUED PERMIT

Building	Planning
Engineering	Public Works
Fire	Traffic

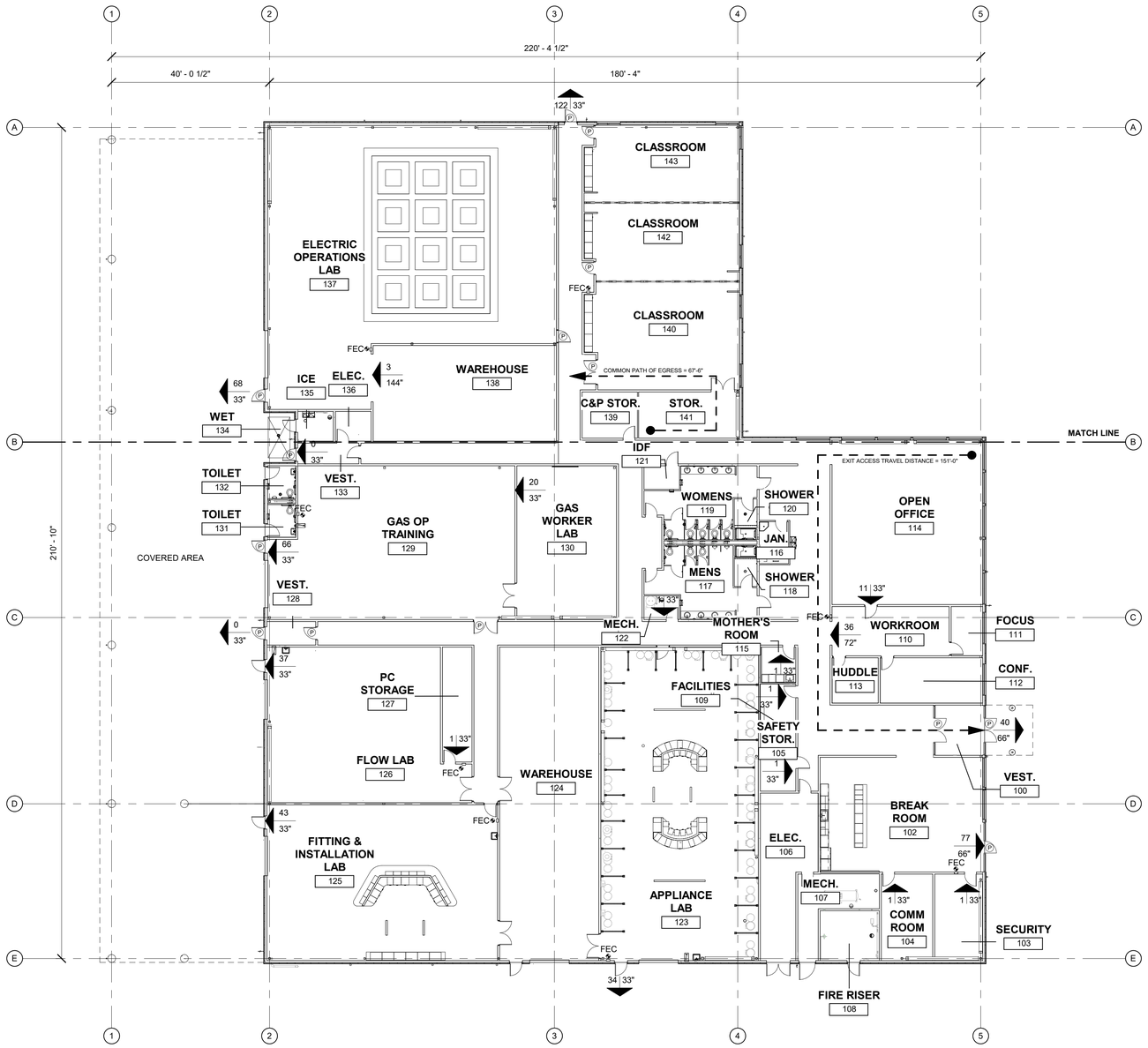

LIFE SAFETY LEGEND

FEC — FIRE EXTINGUISHER CABINET

EXIT SIGNAGE (SEE ELECTRICAL)

P — PANIC HARDWARE REQUIRED

XXX | XX" — COMBINED OCCUPANT LOAD

XXX / XX" — INDICATES ACCESS TO AN EXTERIOR EXIT, EXIT ENCLOSURE OR HORIZONTAL EXIT

XXX | XX" — WIDTH OF EGRESS COMPONENT

OCCUPANT LOAD TABLE					
Rm. #	Name	Area	Occupancy Type	O.L.F.	Occupant Load
102	BREAK ROOM	1,107 SF	ASSEMBLY UNCONCENTRATED (NET)	15 SF	74
103	SECURITY	263 SF	ACCESSORY STORAGE AREAS, MECH.	300 SF	1
104	COMM ROOM	282 SF	ACCESSORY STORAGE AREAS, MECH.	300 SF	1
105	SAFETY STOR.	131 SF	ACCESSORY STORAGE AREAS, MECH.	300 SF	1
107	MECH.	246 SF	ACCESSORY STORAGE AREAS, MECH.	300 SF	1
109	FACILITIES	105 SF	BUSINESS AREAS	150 SF	1
110	WORKROOM	367 SF	BUSINESS AREAS	150 SF	3
111	FOCUS	97 SF	BUSINESS AREAS	150 SF	1
112	CONF.	293 SF	ASSEMBLY UNCONCENTRATED (NET)	15 SF	20
113	HUDDLE	131 SF	BUSINESS AREAS	150 SF	1
114	OPEN OFFICE	1,552 SF	BUSINESS AREAS	150 SF	11
115	MOTHER'S ROOM	76 SF	BUSINESS AREAS	150 SF	1
122	MECH.	52 SF	ACCESSORY STORAGE AREAS, MECH.	300 SF	1
123	APPLIANCE LAB	1,672 SF	SHOPS AND OTHER VOCATIONAL ROOM AREAS (NET)	50 SF	34
124	WAREHOUSE	1,990 SF	WAREHOUSES	500 SF	4
125	FITTING & INSTALLATION LAB	2,100 SF	SHOPS AND OTHER VOCATIONAL ROOM AREAS (NET)	50 SF	43
126	FLOW LAB	1,779 SF	SHOPS AND OTHER VOCATIONAL ROOM AREAS (NET)	50 SF	36
127	PC STORAGE	215 SF	ACCESSORY STORAGE AREAS, MECH.	300 SF	1
129	GAS OP TRAINING	2,288 SF	SHOPS AND OTHER VOCATIONAL ROOM AREAS (NET)	50 SF	46
130	GAS WORKER LAB	956 SF	SHOPS AND OTHER VOCATIONAL ROOM AREAS (NET)	50 SF	20
137	ELECTRIC OPERATIONS LAB	3,224 SF	SHOPS AND OTHER VOCATIONAL ROOM AREAS (NET)	50 SF	65
138	WAREHOUSE	1,127 SF	WAREHOUSES	500 SF	3
139	C&P STOR.	162 SF	ACCESSORY STORAGE AREAS, MECH.	300 SF	1
140	CLASSROOM	977 SF	CLASSROOM AREA (NET)	20 SF	49
141	STOR.	297 SF	ACCESSORY STORAGE AREAS, MECH.	300 SF	1
142	CLASSROOM	705 SF	CLASSROOM AREA (NET)	20 SF	36
143	CLASSROOM	697 SF	CLASSROOM AREA (NET)	20 SF	35
Grand total					493

100% CD SET

REV	ISSUED FOR	DATE

NORTH. PLAN.

SCALE.
As indicated

PSE OPERATIONAL TRAINING CENTER

LIFE SAFETY PLAN - OTC BUILDING

PROJECT#. 202202.06
DRAWN. MR CHECK. AK
ISSUED. 01/26/24

G0.03

202202.06
Autodesk Docs://7222 - 5111 - PSE North Bend Precon Design/PSE-OTC_Current.rvt

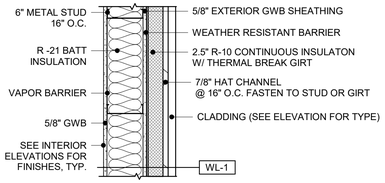

EXTERIOR WALL TYPE #1

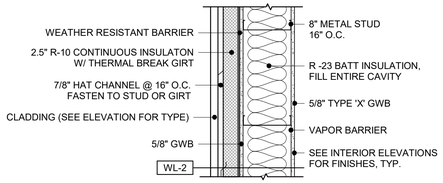

EXTERIOR WALL TYPE #2

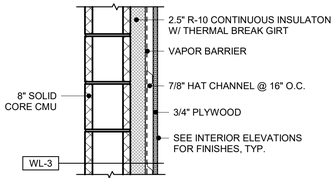

EXTERIOR WALL TYPE #3 (CONTROL HOUSE)

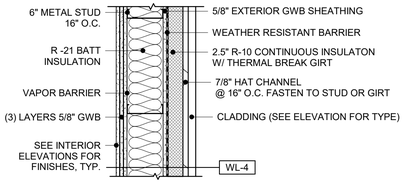

EXTERIOR WALL TYPE #4

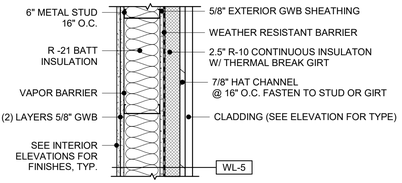

EXTERIOR WALL TYPE #5

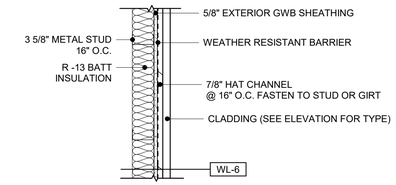

EXTERIOR WALL TYPE #6

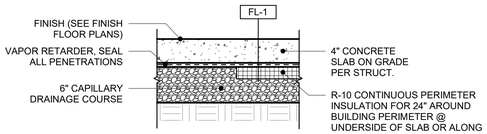

FLOOR TYPE #1

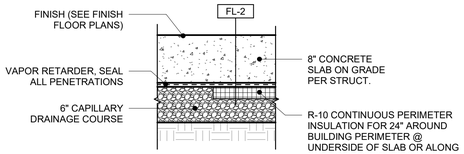

FLOOR TYPE #2

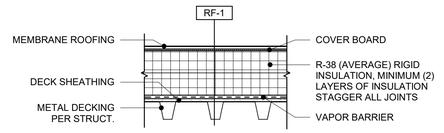

ROOF TYPE #1

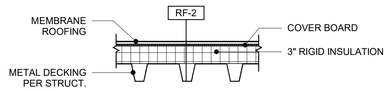

ROOF TYPE #2

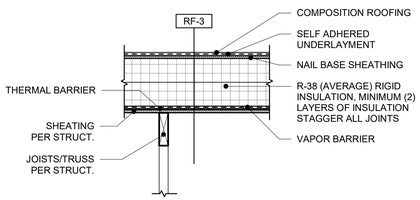

ROOF TYPE #3 (CONTROL HOUSE)

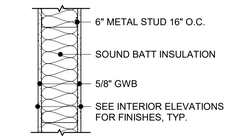

INTERIOR WALL TYPE #1

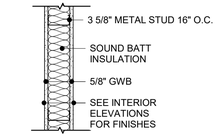

INTERIOR WALL TYPE #2

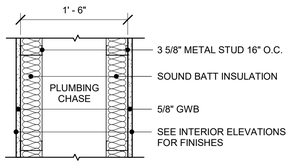

INTERIOR WALL TYPE #3

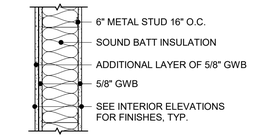

INTERIOR WALL TYPE #4
ACOUSTICAL WALL (STC 45-50)

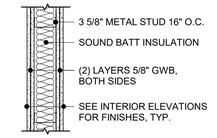

INTERIOR WALL TYPE #5
ACOUSTICAL WALL (STC 50-55)

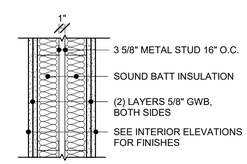

INTERIOR WALL TYPE #6
ACOUSTICAL WALL (STC 60-65)

GENERAL NOTES

1. ALL INTERIOR WALLS TYPE "1" UNLESS NOTED OTHERWISE. OMIT GWB ON INTERIOR SIDE OF ALL MECHANICAL AND PLUMBING CHASE WALLS, TYP.
2. ALL EXTERIOR WALLS TYPE "WL-1" UNLESS NOTED OTHERWISE
3. ALL INTERIOR WALLS, ENTIRE ASSEMBLY TO EXTEND TO UNDERSIDE OF ROOF DECK UNLESS NOTED OTHERWISE. PROVIDE MTL. DECK FLUTE CLOSURES. NEATLY SCRIBE AND SEAL ALL PENETRATIONS.
4. SEE EXTERIOR ELEVATIONS AND INTERIOR ELEVATIONS FOR SIDING TYPES/FINISHES AND CONFIGURATIONS, TYP.
5. ALL INTERIOR WALLS TO BE FULLY INSULATED WITH ACOUSTIC BATTS, TYP.
6. FOR WALL ASSEMBLIES THAT INCLUDE SHEARWALLS, SEE STRUCTUAL.
7. IDENTIFICATION MARK SHALL BE APPLIED TO ALL INSULATION MATERIALS AND INSULATION INSTALLED SUCH THAT THE MARK IS READILY OBSERVABLE DURING INSPECTION.
8. CONTRACTOR TO UTILIZE INSTALLATION METHODS, THICKNESSES, DENSITIES AND CLEARANCES PER THE INSULATION MANUFACTUER'S REQUIREMENT, TO ACHIEVE THE INTENDED MINIMUM R-VALUE OF ALL INSULATION MATERIALS AS INDICATED ON ASSEMBLY TYPES.
9. WHERE TWO OR MORE LAYERS OF RIGID INSULATION WILL BE USED, STAGGER EDGE JOINTS OF PANELS UNLESS SUBMITTED AND APPROVED BY THE ARCHITECT AND THE AUTHORITY HAVING JURISDICTION AS A SPECIAL CONDITION PER MANUFACTURER'S REQUIREMENTS.
10. THE AREA UNDER THE ROOFTOP HVAC EQUIPMENT INSIDE OF THE EQUIPMENT CURB SHALL BE INSULATED TO A MINIMUM OF R-13 IN ALL LOCATIONS WHERE THERE ARE NOT ROOF OPENINGS FOR DUCTWORK.

PRCNC20240216

ZERVAS
209 PROSPECT STREET - BELLINGHAM, WA 98225
p.360.734.4744 - zervasgroup.com

9587 REGISTERED ARCHITECT
ANDREW J. KRZYSIEK
STATE OF WASHINGTON

City of Puyallup
Development & Permitting Services
ISSUED PERMIT
Building | Planning
Engineering | Public Works
Fire | Traffic

100% CD SET

REV	ISSUED FOR	DATE

NORTH. PLAN.

SCALE.
As indicated

PSE OPERATIONAL TRAINING CENTER

ASSEMBLIES

PROJECT#.			202202.06
DRAWN.	MR	CHECK.	AK
ISSUED.			01/26/24

G0.04

1/25/2024 4:10:07 PM

PRCNC20240216

ZERVAS
209 PROSPECT STREET - BELLINGHAM, WA 98225
p.360.734.4744 - zervasgroup.com

9587 REGISTERED ARCHITECT
ANDREW J. KRZYSIEK
STATE OF WASHINGTON

2018 WSEC ANALYSIS - OTC BUILDING

C406 EFFICIENCY PACKAGES:

A. SECTION C406 EFFICIENCY PACKAGES
C406.1 ADDITIONAL ENERGY EFFICIENCY CREDIT REQUIREMENTS
1. FULLY CONDITIONED:

Code Section	Commercial Building Occupancy					
	Group R-1	Group R-2	Group B	Group E	Group M	All Other
	Additional Efficiency Credits					
1. More efficient HVAC performance in accordance with Section C406.2	2.0	3.0	3.0	2.0	1.0	2.0
2. Reduced lighting power: Option 1 in accordance with Section C406.3.1	1.0	1.0	2.0	2.0	3.0	2.0
3. Reduced lighting power: Option 2 in accordance with Section C406.3.2[a]	2.0	3.0	4.0	4.0	6.0	4.0
4. Enhanced lighting controls in accordance with Section C406.4	NA	NA	1.0	1.0	1.0	1.0
5. On-site supply of renewable energy in accordance with C406.5	3.0	3.0	3.0	3.0	3.0	3.0
6. Dedicated outdoor air system in accordance with Section C406.6[b]	4.0	4.0	4.0	NA	NA	4.0
7. High performance dedicated outdoor air system in accordance with Section C406.7	4.0	4.0	4.0	4.0	4.0	4.0
8. High-efficiency service water heating in accordance with Sections C406.8.1 and C406.8.2	4.0	5.0	NA	NA	NA	8.0
9. High performance service water heating in multi-family buildings in accordance with Section C406.9	7.0	8.0	NA	NA	NA	NA
10. Enhanced envelope performance in accordance with Section C406.10[c]	3.0	6.0	3.0	3.0	3.0	4.0
11. Reduced air infiltration in accordance with Section C406.11[c]	1.0	2.0	1.0	1.0	1.0	1.0
12. Enhanced commercial kitchen equipment in accordance with Section C406.12	5.0	NA	NA	NA	5.0	5.0 (Group A-2 only)

2018 WSEC GENERAL NOTES:

1. PRESCRIPTIVE ENVELOPE THERMAL COMPLIANCE PATH. SEE ENVELOPE COMPLIANCE REPORT.

2. ALL RELIEF, OUTSIDE AIR INTAKE AND EXHAUST OPENINGS SHALL BE PROVIDED WITH DAMPERS IN ACCORDANCE WITH MECHANICAL SECTION C403.7.8.

3. BUILDING ENCLOSURE AIR LEAKAGE TESTING IS REQUIRED FOR WSEC COMPLIANCE AND SHALL BE PERFORMED PER ASTM C779 (OR EQUIVALENT METHOD APPROVED BY THE CODE OFFICIAL) AND THE BUILDING ENCLOSURE AIR LEAKAGE TEST RESULTS SHALL NOT EXCEED 0.25 CFM/FT2 AT 0.3 IN. WG (75 PA); ALL DOCUMENTATION REQUIREMENTS PER C103.2 AND C402.5.1.2 APPLY.

4. BUILDING ENCLOSURE AIR LEAKAGE TESTING CONTRACTOR REQUIREMENTS:
A. SUBMIT BUILDING ENCLOSURE AIR LEAKAGE TEST REPORTS TO JURISDICTION AND OWNER.
B. IF INITIAL TEST RESULT EXCEEDS 0.25 CFM/FT2 (1.5 L/S*M2), INSPECTION AND ALL PRACTICAL CORRECTIVE ACTIONS SHALL BE COMPLETED AND DOCUMENTED IN THE AIR LEAKAGE TEST REPORT.
C. IF INITIAL TEST RESULT EXCEEDS 0.40 CFM/FT2 (2.0 L/S*M2), CORRECTIVE ACTIONS SHALL ALSO INCLUDE RE-TESTING.
D. CORRECTIVE MEASURES AND RETESTING MUST BE REPEATED UNTIL THE TEST RESULT IS 0.40 CFM/FT2 (2.0 L/S*M2) OR LESS.
E. INCLUDE AIR BARRIER TEST REPORT IN PROJECT CLOSE OUT DOCUMENTATION PROVIDED TO BUILDING OWNER.

5. PROJECT CLOSE OUT DOCUMENTATION IS REQUIRED TO BE PROVIDED BY THE CONTRACTOR INCLUDING APPLICABLE CALCULATIONS, WSEC ENVELOPE COMPLIANCE REPORTS, AND FENESTRATION NFRC RATING CERTIFICATES PER C103.6.3.

2018 WSEC LEGEND:

– – – – – – CONTINUOUS AIR BARRIER

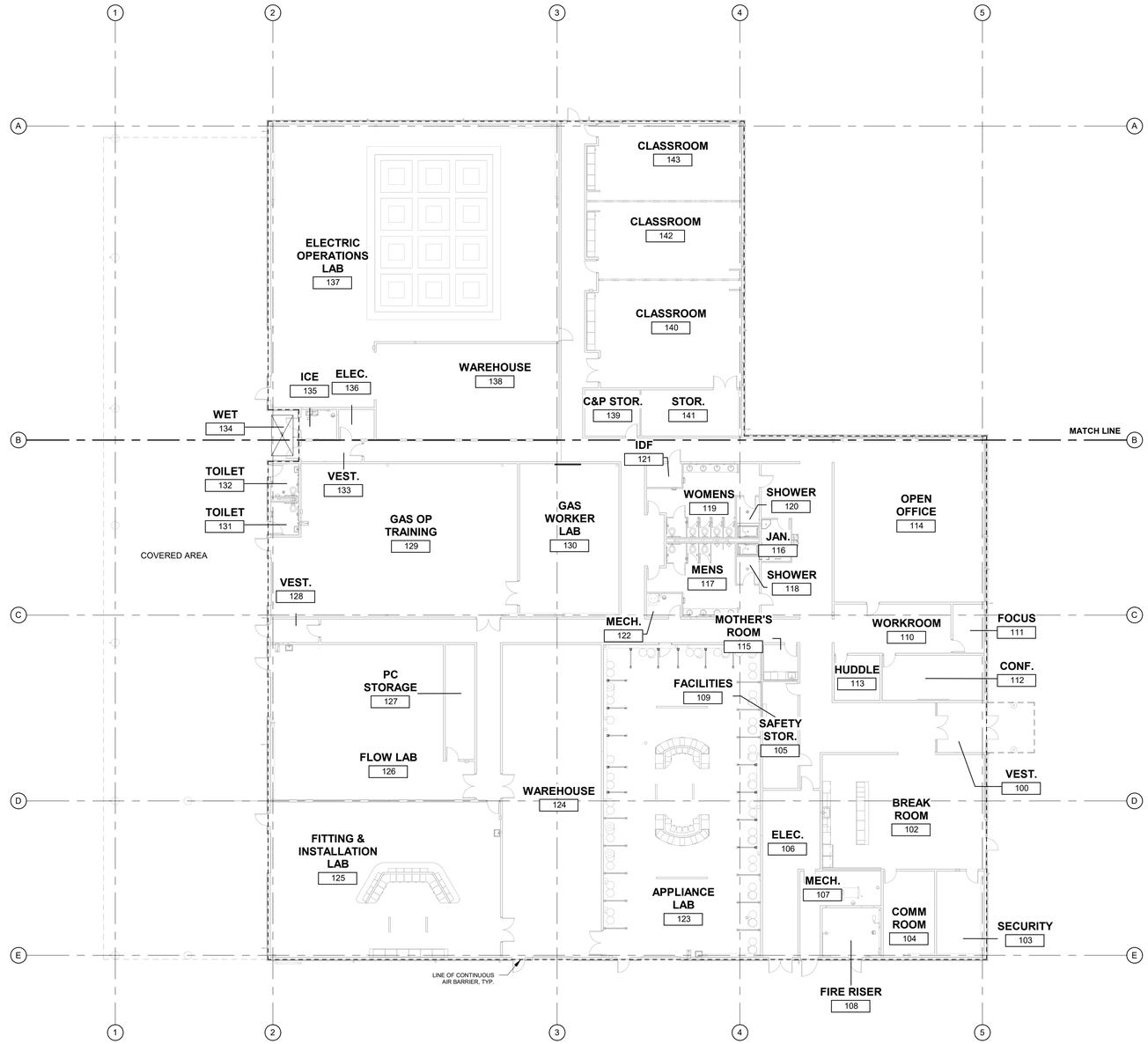

1 WSEC ENVELOPE
1/16" = 1'-0"

City of Puyallup
Development & Permitting Services
ISSUED PERMIT
Building | Planning
Engineering | Public Works
Fire | Traffic

100% CD SET

REV	ISSUED FOR	DATE

NORTH. PLAN.

SCALE.
As indicated

PSE OPERATIONAL TRAINING CENTER

WASHINGTON STATE ENERGY CODE - OTC BUILDING

PROJECT#.	202202.06
DRAWN. MR	CHECK. AK
ISSUED.	01/26/24

G0.05

202202.06
Autodesk Docs://7222 - 5111 - PSE North Bend Precon Design/PSE-OTC_Current.rvt

1/25/2024 4:10:08 PM

PRCNC20240216

ZERVAS
209 PROSPECT STREET - BELLINGHAM, WA 98225
p.360.734.4744 - zervasgroup.com

9587 REGISTERED ARCHITECT
ANDREW J. KRZYSIEK
STATE OF WASHINGTON

City of Puyallup
Development & Permitting Services
ISSUED PERMIT
Building | Planning | Engineering | Public Works | Fire | Traffic

2018 WSEC ENVELOPE COMPLIANCE REPORT - OTC BUILDING

ENVELOPE COMPLIANCE SUMMARY

2018 WSEC Compliance Forms for Commercial Buildings including Group R2, R3 & R4 over 3 stories and all R1

Administered by: ©2023 NEEA, All rights reserved

Project & Applicant Information	**Project Title**	PSE Operational Training Center - 2018 WSEC	For Building Department Use:	**Date:**	**Oct 25, 2023**
	Project Address	325 Todd Road NW Puyallup, WA 98371			
	Applicant Name	Matt Reeves			
	Applicant Phone	360-734-4744			
	Applicant Email	matt@zervasgroup.com			
For questions about this report, contact WSEC Commercial Technical Support at 360-539-5300 or via email at com.techsupport@waenergycodes.com					

General Occupancy	All Commercial	**General Building Use Type(s)**	Education, Vocational	**Building Cond. Floor Area**	33,837
Project Scope	New Building	**Space Conditioning Categories**	Fully Conditioned	**Project Cond. Floor Area**	33,837
				Floors Above Grade	1
				Compliance Method	Compliance Method 1 - General
Envelope Project Description	THE PROPOSED PROJECT IS FOR A NEW OPERATIONAL TRAINING CENTER. THE OTC BUILDING WILL BE USED AS A VOCATIONAL SCHOOL FOR CONSTRUCTION TRADES. IT WILL CONSIST OF OFFICE/COMMERCIAL/INSTRUCTIONAL SPACES.				

Envelope Compliance Scope and Method	**Scope**	**Space Conditioning Category**	**Compliance Method**	**WWR/SRR per Category**	**UA Calculation Adjustment**	**Fenestration Alternates**	**Compliance Verification**
	New Building	Fully Conditioned	Prescriptive	14.30% / 0%	None selected	No alternates selected	**COMPLIES**

Air Barrier Testing	Air barrier testing included in project scope	**Air Barrier Comments**	

Project Title	**PSE Operational Training Center - 2018 WSEC**	**Date**	**Oct 25, 2023**

Scope & Space Conditioning	**NEW BUILDING - FULLY CONDITIONED**			**Compliance Verification**	**COMPLIES**
Window-to-wall Ratio	14.30%	**Skylight-to-roof-ratio**	0%	**Vertical Fenestration Alternate**	No alternates selected

Opaque Envelope Assemblies

				Insulation R-Values				
Roof/Ceiling	**Location in Documents**	**Assembly ID**	**Assembly Location**	**Cavity**	**Continuous (% penetration)**	**2nd Layer (MB Roof)**	**U-Factor**	**Net Area (SF)**
Insulation entirely above deck	G0.04, Roof Type #1	RF-1	Exterior		R-38 (< 0.04%)			33,114
	U-Factor Source:			U-Factor Source Description:				
	Is this assembly exterior or interior?: Exterior							
Walls	**Location in Documents**	**Assembly ID**	**Assembly Location**	**Cavity**	**Continuous (% penetration)**	**Insulated Wall Furring**	**U-Factor**	**Net Area (SF)**
Steel-framed - Commercial	G0.04, Exterior Wall Type #1	WL-1	Exterior	R-21	R-10 (< 0.04%)			9,376
	U-Factor Source:			U-Factor Source Description:				
	Framing Depth:			Framing Spacing:				
	Is this assembly exterior or interior?: Exterior							
Steel-framed - Commercial	G0.04, Exterior Wall Type #2	WL-2	Exterior	R-23	R-10 (< 0.04%)			3,856
	U-Factor Source:			U-Factor Source Description:				
	Framing Depth:			Framing Spacing:				
	Is this assembly exterior or interior?: Exterior							
Slab-on-grade Floors	**Location in Documents**	**Assembly ID**	**Assembly Location**	**Slab Edge**	**Under Slab**		**F-Factor**	**Perimeter Length (SF)**
Unheated slab	G0.04, Floor Type #1 and #2	FL-1 and FL-2	At grade level	R-10				808
	Slab Insulation Method: 4 ft horizontal (no slab edge insulation)			F-Factor Source:				
	F-Factor Source Description:							

Fenestration & Opaque Door Assemblies

				Insulation R-Values				
Opaque Doors	**Location in Documents**	**Assembly ID**	**Assembly Location**	**Door Insulation**			**U-Factor**	**Rough Opening (SF)**
Swinging	A3.03, Door Types	Door Types A and C	Exterior				U-0.37	343
	What percentage of this opaque door is glazing?: 50% or less			U-Factor Source:				
	U-Factor Source Description:			Is this assembly exterior or interior?: Exterior				
	Is this a public entrance door?:							
Garage, Sectional	A3.03, Door Types	Door Type SD	Exterior				U-0.31	804
	What percentage of this opaque door is glazing?: 50% or less			U-Factor Source:				
	U-Factor Source Description:			Is this assembly exterior or interior?: Exterior				
Vertical Fenestration	**Location in Documents**	**Assembly ID**	**Assembly Location**	**Orientation**	**Shading (PF)**	**Fenestration SHGC**	**Fenestration U-Factor**	**Rough Opening (SF)**
Fixed - Class AW or site built	A3.04 - STOREFRONT WINDOW TYPES	WINDOW TYPES A AND B (STOREFRONT)	Exterior	South/East/West Facing	PF < 0.2	SHGC-0.38	U-0.34	201
	U-Factor & SHGC Source:			U-Factor Source Description:				
	Is this assembly exterior or interior?: Exterior							
All other fenestration types	A3.04 - ALUMINUM WINDOW TYPES	ALUMINUM WINDOW TYPES	Exterior	South/East/West Facing	PF < 0.2	SHGC-0.38	U-0.28	1,496
	U-Factor & SHGC Source:			U-Factor Source Description:				
	Is this assembly exterior or interior?: Exterior							
All other fenestration types	A3.04 - ALUMINUM WINDOW TYPES	ALUMINUM WINDOW TYPES	Exterior	North Facing	PF < 0.2	SHGC-0.51	U-0.28	618
	U-Factor & SHGC Source:			U-Factor Source Description:				
	Is this assembly exterior or interior?: Exterior							
Glazed Doors	**Location in Documents**	**Assembly ID**	**Assembly Location**	**Orientation**	**Shading (PF)**	**Fenestration SHGC**	**Fenestration U-Factor**	**Rough Opening (SF)**
Swinging entrance door	A3.03, Door Types	Door Type BB	Exterior	South/East/West Facing	PF < 0.2	SHGC-0.38	U-0.60	42
	U-Factor & SHGC Source:			U-Factor Source Description:				
	Is this assembly exterior or interior?: Exterior			Is this a public entrance door?: Yes				
	Door enclosed within a vestibule?: Yes							
Swinging entrance door	A3.03, Door Types	Door Type BB	Exterior	South/East/West Facing	PF < 0.2	SHGC-0.38	U-0.36	42
	U-Factor & SHGC Source:			U-Factor Source Description:				
	Is this assembly exterior or interior?: Exterior			Is this a public entrance door?: No				

100% CD SET

REV	ISSUED FOR	DATE

NORTH. PLAN.

SCALE.

PSE OPERATIONAL TRAINING CENTER

WASHINGTON STATE ENERGY CODE - OTC BUILDING

PROJECT#.			202202.06
DRAWN.	MR	CHECK.	AK
ISSUED.			01/26/24

G0.06

202202.06
Autodesk Docs://7222 - 5111 - PSE North Bend Precon Design/PSE-OTC_Current.rvt

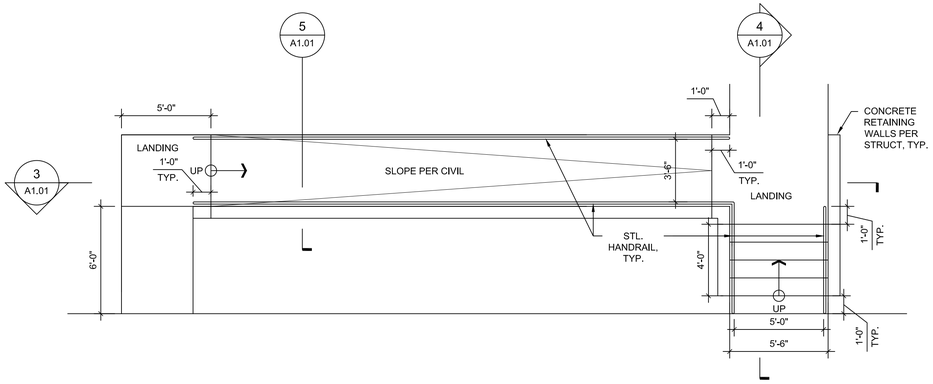

2 ENLARGED RAMP AND STAIR PLAN
SCALE: 1/4"=1'-0"

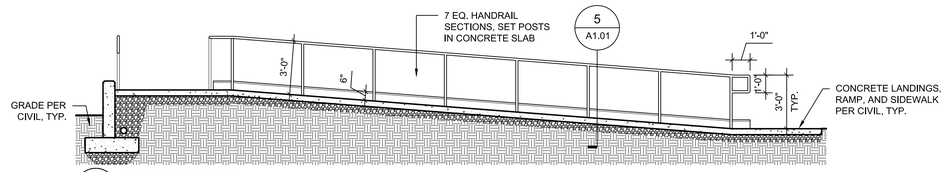

3 RAMP SECTION
SCALE: 1/4"=1'-0"

Maximum allowable slope of ramp is 8.33%. Civil drawings state a slope of 6.64% (PRCCP20240215)

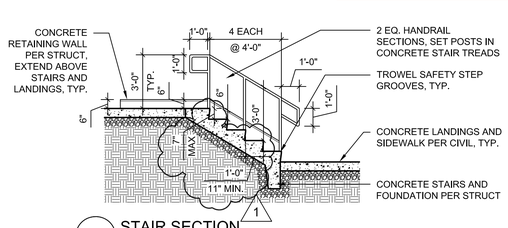

4 STAIR SECTION
SCALE: 1/4"=1'-0"

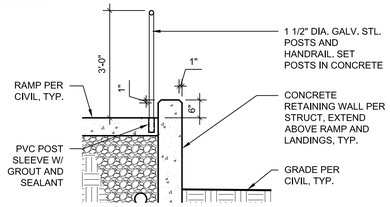

5 HANDRAIL DETAIL @ RAMP, STAIR SIM.
SCALE: 1/2"=1'-0"

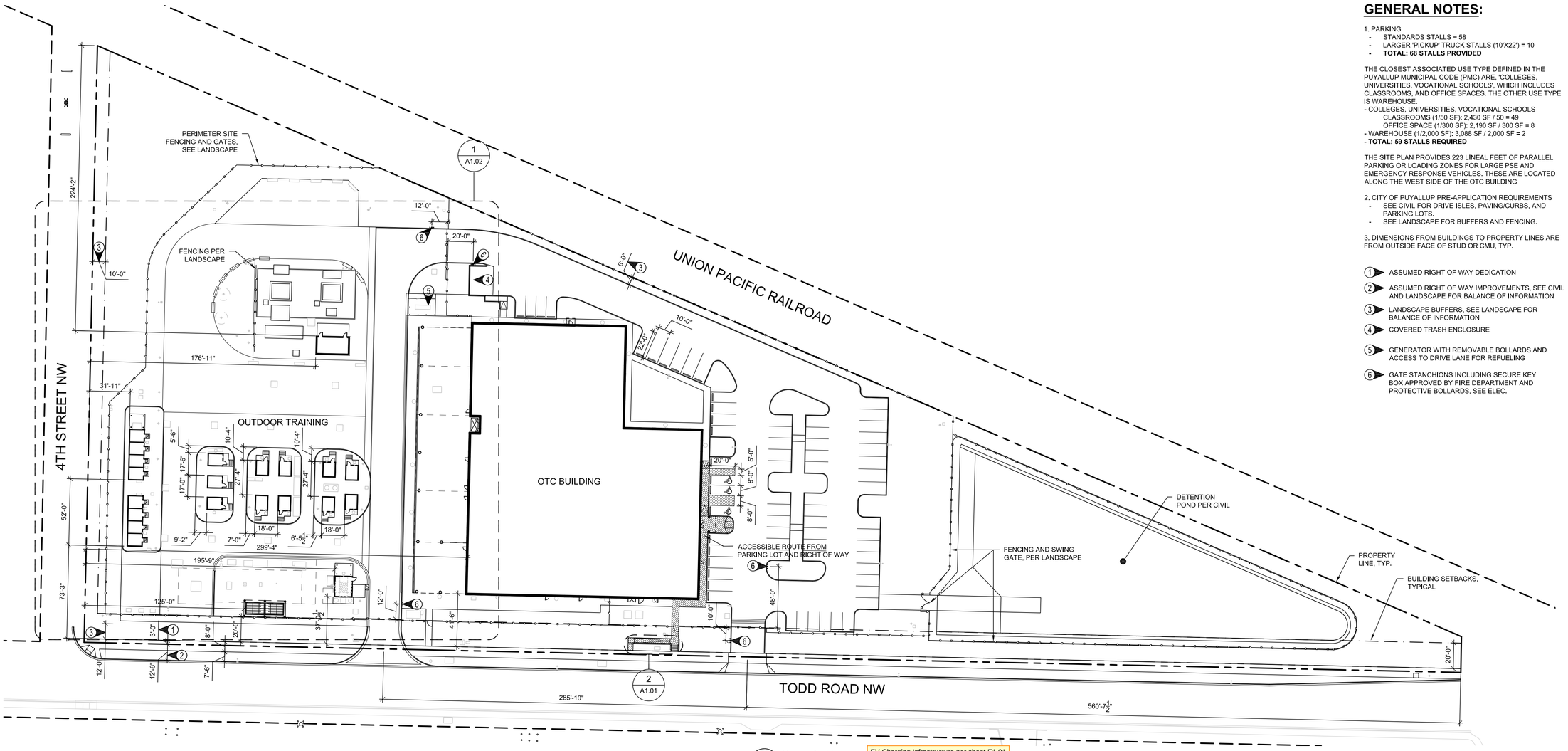

1 SITE PLAN
SCALE: 1"=40'-0"

EV Charging Infrastructure per sheet E1.01

Multiple Site Plans were submitted. The Building inspector must be provided with the Site Plan that has the Planning Department's stamp during inspection.

GENERAL NOTES:

1. PARKING
   - STANDARDS STALLS = 58
   - LARGER 'PICKUP' TRUCK STALLS (10'X22') = 10
   - **TOTAL: 68 STALLS PROVIDED**

THE CLOSEST ASSOCIATED USE TYPE DEFINED IN THE PUYALLUP MUNICIPAL CODE (PMC) ARE, 'COLLEGES, UNIVERSITIES, VOCATIONAL SCHOOLS', WHICH INCLUDES CLASSROOMS, AND OFFICE SPACES. THE OTHER USE TYPE IS WAREHOUSE.
- COLLEGES, UNIVERSITIES, VOCATIONAL SCHOOLS
  CLASSROOMS (1/50 SF): 2,430 SF / 50 = 49
  OFFICE SPACE (1/300 SF): 2,190 SF / 300 SF = 8
- WAREHOUSE (1/2,000 SF): 3,088 SF / 2,000 SF = 2
- **TOTAL: 59 STALLS REQUIRED**

THE SITE PLAN PROVIDES 223 LINEAL FEET OF PARALLEL PARKING OR LOADING ZONES FOR LARGE PSE AND EMERGENCY RESPONSE VEHICLES. THESE ARE LOCATED ALONG THE WEST SIDE OF THE OTC BUILDING

2. CITY OF PUYALLUP PRE-APPLICATION REQUIREMENTS
   - SEE CIVIL FOR DRIVE ISLES, PAVING/CURBS, AND PARKING LOTS.
   - SEE LANDSCAPE FOR BUFFERS AND FENCING.

3. DIMENSIONS FROM BUILDINGS TO PROPERTY LINES ARE FROM OUTSIDE FACE OF STUD OR CMU, TYP.

1 ASSUMED RIGHT OF WAY DEDICATION

2 ASSUMED RIGHT OF WAY IMPROVEMENTS, SEE CIVIL AND LANDSCAPE FOR BALANCE OF INFORMATION

3 LANDSCAPE BUFFERS, SEE LANDSCAPE FOR BALANCE OF INFORMATION

4 COVERED TRASH ENCLOSURE

5 GENERATOR WITH REMOVABLE BOLLARDS AND ACCESS TO DRIVE LANE FOR REFUELING

6 GATE STANCHIONS INCLUDING SECURE KEY BOX APPROVED BY FIRE DEPARTMENT AND PROTECTIVE BOLLARDS, SEE ELEC.

PRCNC20240216

ZERVAS
ARCHITECTURE | INTERIOR DESIGN
zervasgroup.com
209 Prospect Street
Bellingham, WA 98225
360.734.4744

9587 REGISTERED ARCHITECT
ANDREW J. KRZYSIEK
STATE OF WASHINGTON

City of Puyallup
Development & Permitting Services
ISSUED PERMIT
Building | Planning
Engineering | Public Works
Fire | Traffic

100% CD SET

REV	ISSUED FOR	DATE
1	BUILDING PERMIT REVISION	05/21/2024

PLAN NORTH | TRUE NORTH
SCALE: AS NOTED
0 X'

PSE - OPERATIONAL TRAINING CENTER

OVERALL SITE PLAN

PROJECT No:	202202.06
DRAWN BY:	MR
CHECKED BY:	AK
DATE ISSUED:	01/26/24

A1.01

© 2023

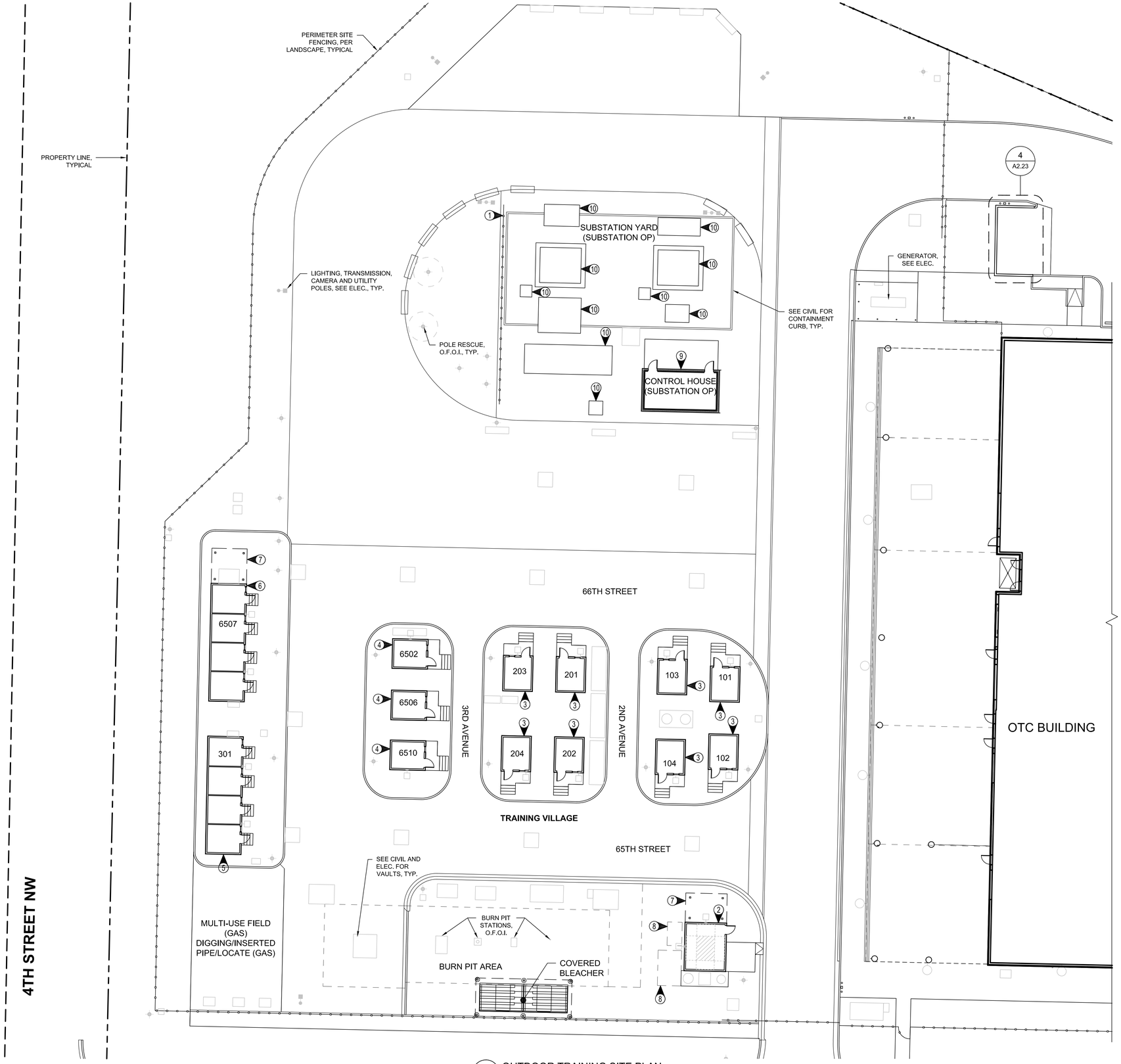

1 OUTDOOR TRAINING SITE PLAN
SCALE: 1/16"=1'-0"

GENERAL NOTES:

1. SUBSTATION FENCING, PER LANDSCAPE
2. COMPRESSOR BUILDING
3. RESIDENTIAL "VILLAGE" UNITS
4. COMMERCIAL "VILLAGE" UNITS
5. RESIDENTIAL MULTI-FAMILY 4-PLEX BUILDING WITH FOUR METER MANIFOLD TO SIMULATE METER MIXES & MNS TRAINING
6. MULTI-UNIT COMMERCIAL 4-PLEX BUILDING
7. COVERED MANIFOLD SETS
8. PSE MOCK UP AREA. NO WORK BY GC
9. CONTROL HOUSE
10. SUBSTATION EQUIPMENT BY PSE. PROVIDE CONCRETE PADS FOR SUBSTATION EQUIPMENT PER PSE SUBSTATION TYPICAL DETAILS, SEE CIVIL AND STRUCT.

PRCNC20240216

ZERVAS
ARCHITECTURE | INTERIOR DESIGN
zervasgroup.com
209 Prospect Street
Bellingham, WA 98225
360.734.4744

9587 REGISTERED ARCHITECT
ANDREW J. KRZYSIEK
STATE OF WASHINGTON

City of Puyallup
Development & Permitting Services
ISSUED PERMIT
Building | Planning
Engineering | Public Works
Fire | Traffic

100% CD SET

REV	ISSUED FOR	DATE

PLAN NORTH | TRUE NORTH
SCALE: 1/16"=1'-0" 0 16'

PSE - OPERATIONAL TRAINING CENTER

OUTDOOR TRAINING SITE PLAN

PROJECT No:	202202.06
DRAWN BY:	MR
CHECKED BY:	AK
DATE ISSUED:	01/26/24

A1.02

© 2023

1/26/2024 2:14:15 PM

PRCNC20240216

ZERVAS
209 PROSPECT STREET - BELLINGHAM, WA 98225
p.360.734.4744 - zervasgroup.com

9587 REGISTERED ARCHITECT
ANDREW J. KRZYSIEK
STATE OF WASHINGTON

City of Puyallup
Development & Permitting Services
ISSUED PERMIT
Building | Planning
Engineering | Public Works
Fire | Traffic

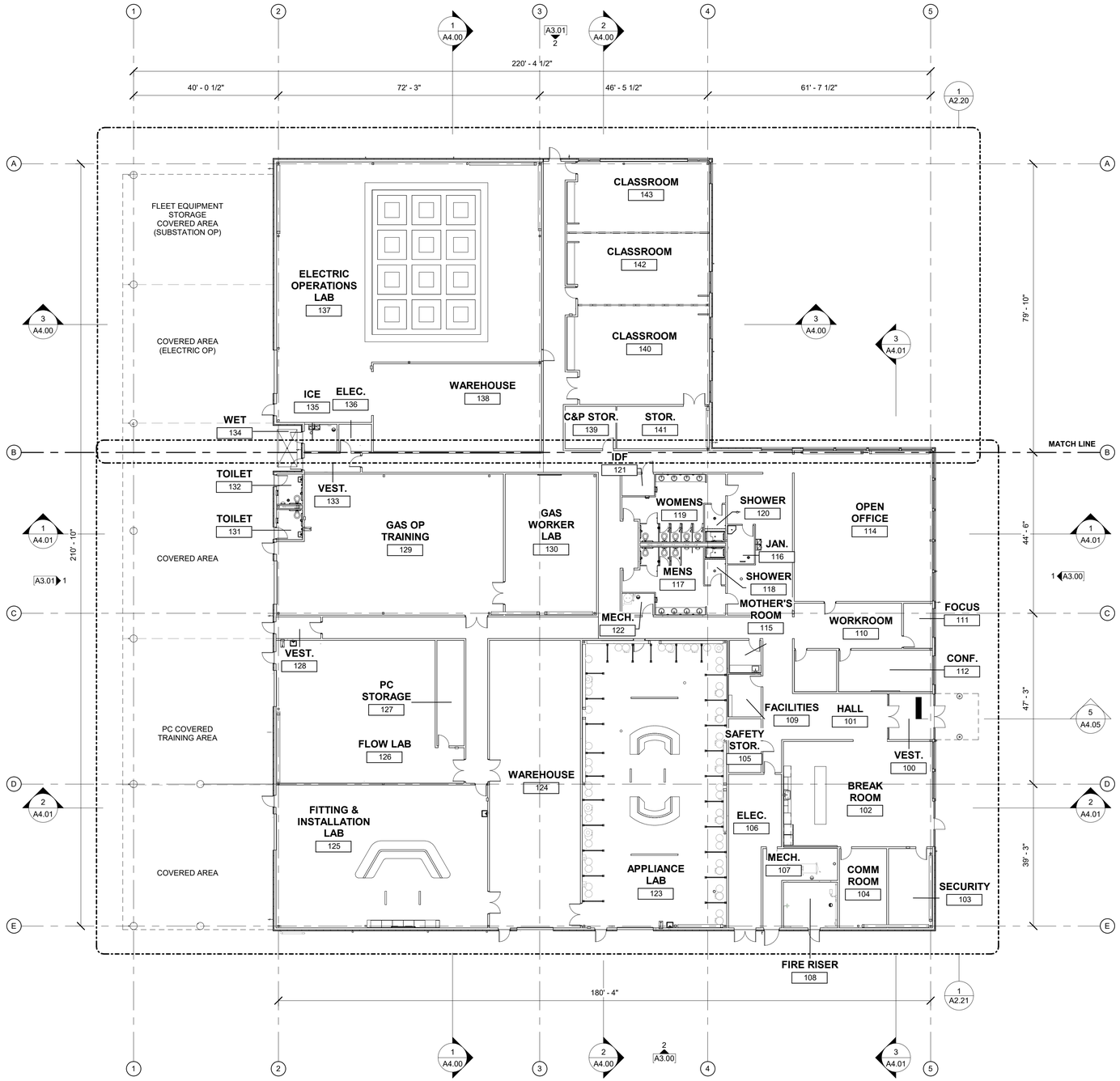

1 OVERALL FLOOR PLAN
1/16" = 1'-0"

100% CD SET

REV	ISSUED FOR	DATE

NORTH. PLAN.

SCALE.
1/16" = 1'-0"

PSE OPERATIONAL TRAINING CENTER

OTC BUILDING OVERALL FLOOR PLAN

PROJECT#.	202202.06		
DRAWN.	MR	CHECK.	AK
ISSUED.	01/26/24		

A2.00

202202.06
Autodesk Docs://7222 - 5111 - PSE North Bend Precon Design/PSE-OTC_Current.rvt

1/26/2024 2:14:19 PM

PRCNC20240216

ZERVAS
209 PROSPECT STREET - BELLINGHAM, WA 98225
p.360.734.4744 - zervasgroup.com

9587 REGISTERED ARCHITECT
ANDREW J. KRZYSIEK
STATE OF WASHINGTON

GENERAL NOTES

1. SLOPE ROOF STRUCTURE A MINIMUM OF 1/4":12" FOR DRAINAGE, TYPICAL, UNLESS NOTED OTHERWISE

2. COORDINATE MECHANICAL SCREEN LOCATIONS WITH MECHANICAL UNITS, TYP.

3. SEE EXTERIOR ELEVATIONS FOR DOWNSPOUT LOCATIONS, TYP.

City of Puyallup
Development & Permitting Services
ISSUED PERMIT
Building | Planning
Engineering | Public Works
Fire | Traffic

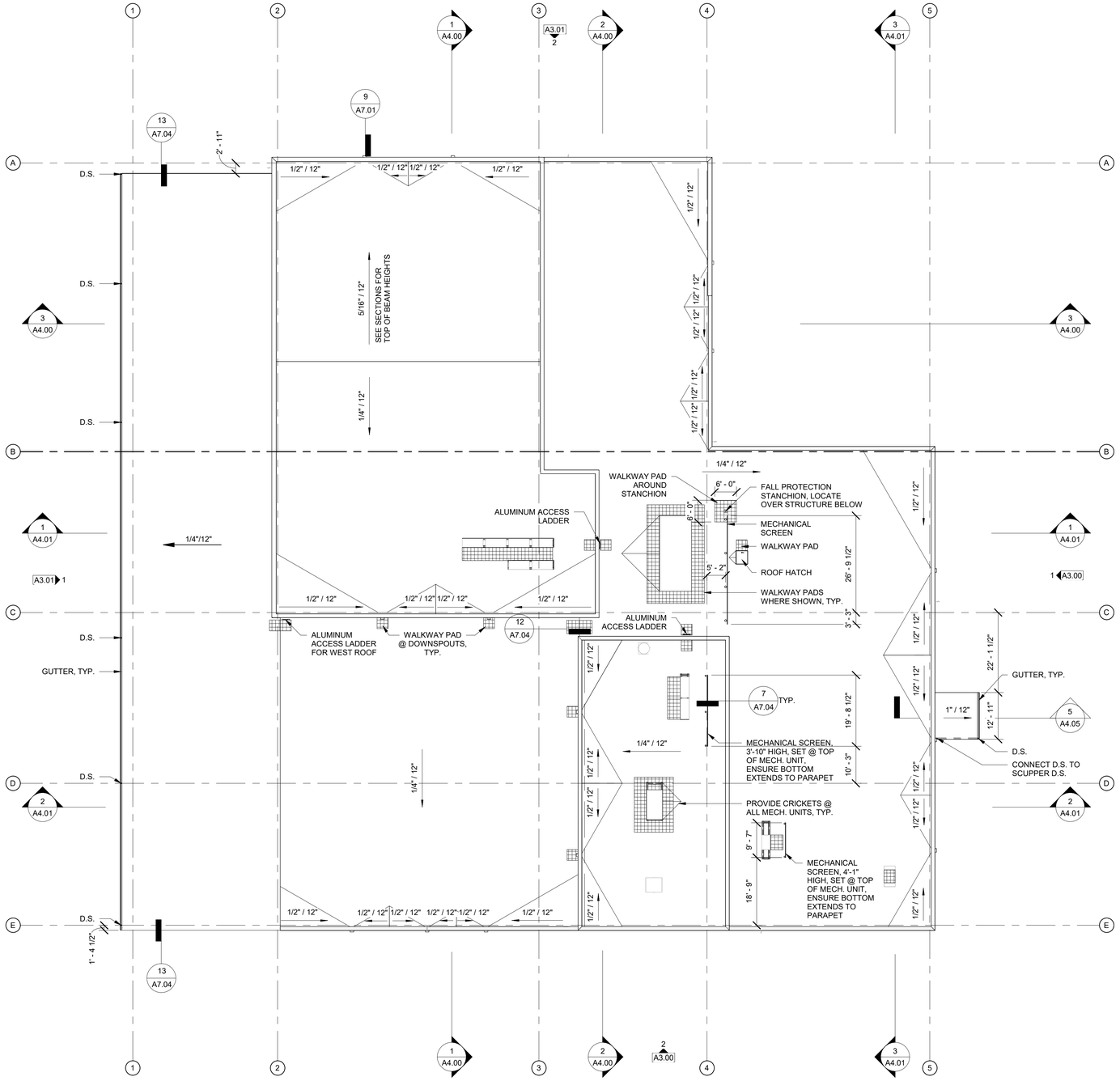

100% CD SET

REV.	ISSUED FOR	DATE

NORTH. PLAN.

SCALE.
1/16" = 1'-0"

PSE OPERATIONAL TRAINING CENTER

OTC BUILDING OVERALL ROOF PLAN

PROJECT#.	202202.06
DRAWN. MR	CHECK. AK
ISSUED.	01/26/24

A2.10

202202.06
Autodesk Docs://7222 - 5111 - PSE North Bend Precon Design/PSE-OTC_Current.rvt

1/26/2024 2:14:21 PM

PRCNC20240216

ZERVAS
209 PROSPECT STREET - BELLINGHAM, WA 98225
p.360.734.4744 - zervasgroup.com

9587 REGISTERED ARCHITECT
ANDREW J. KRZYSIEK
STATE OF WASHINGTON

City of Puyallup
Development & Permitting Services
ISSUED PERMIT

Building	Planning
Engineering	Public Works
Fire	Traffic

GENERAL NOTES

1. ALL INTERIOR WALLS TYPE "1" UNLESS NOTED OTHERWISE. OMIT GWB ON INTERIOR SIDE OF ALL MECHANICAL AND PLUMBING CHASE WALLS, TYP.
2. WALL DIMENSIONS ARE TO FACE OF STUD AND CONCRETE UNLESS NOTED OTHERWISE, TYP.
3. WHERE DOORS ARE SHOWN NEAR ADJACENT WALL PROVIDE 4" FROM DOOR OPENING TO FACE OF STUD OR CONCRETE UNLESS NOTED OTHERWISE, TYP.
4. FOR CLOCK/SPEAKERS PROVIDE BLOCKING/FRAMING PER MFR., SEE ELEC. FOR DEVICES AND LOCATION, SEE STRUCT. FOR TYPICAL OPENING REQUIREMENTS.

1 48" HIGH WALL, SEE STRUCT. FOR BOTTOM TRACK REQUIREMENTS

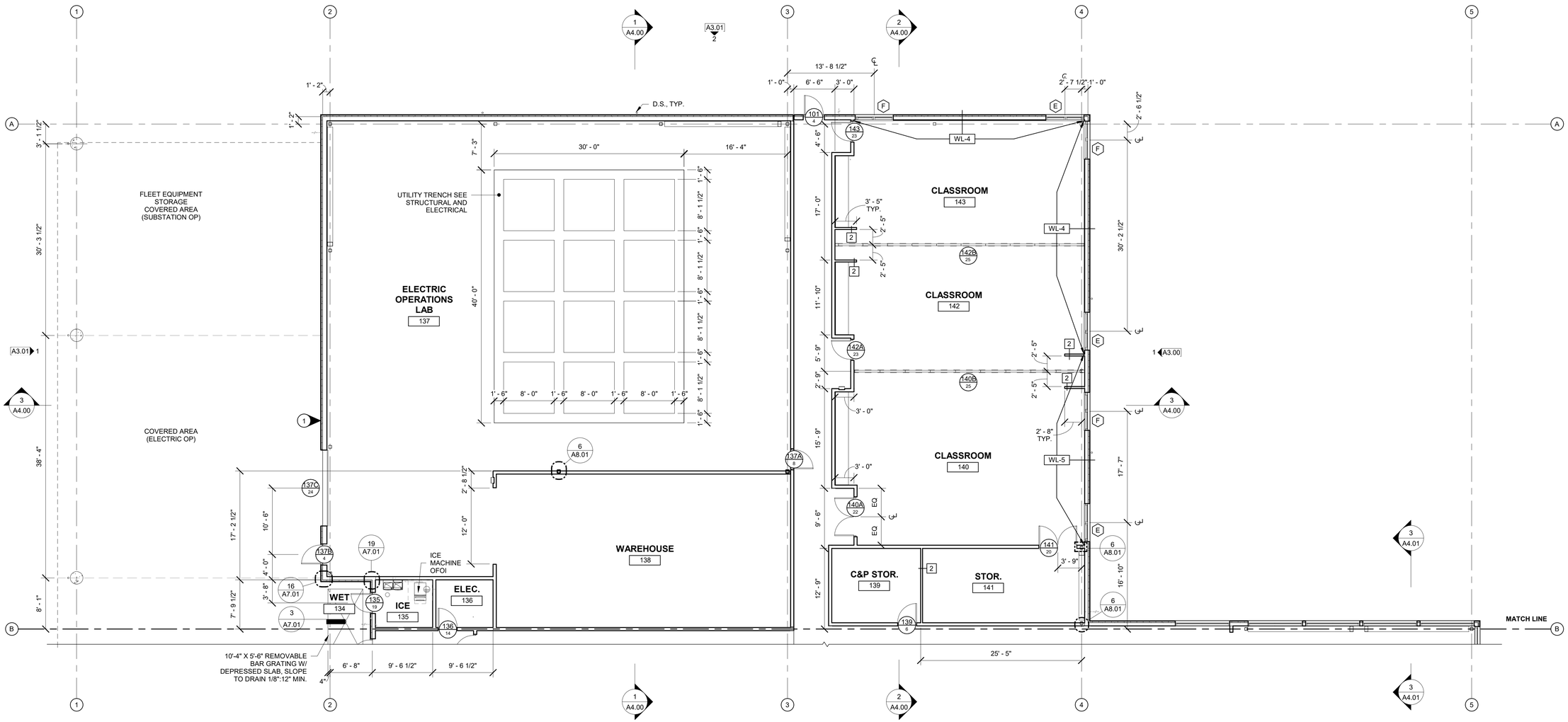

1 ENLARGED FLOOR PLAN
1/8" = 1'-0"

100% CD SET

REV	ISSUED FOR	DATE

NORTH. PLAN.

SCALE.
As indicated

PSE OPERATIONAL TRAINING CENTER

OTC BUILDING ENLARGED FLOOR PLAN

PROJECT#.			202202.06
DRAWN.	MR	CHECK.	AK
ISSUED.			01/26/24

A2.20

202202.06
Autodesk Docs://7222 - 5111 - PSE North Bend Precon Design/PSE-OTC_Current.rvt

1/26/2024 2:14:25 PM

PRCNC20240216

ZERVAS
209 PROSPECT STREET - BELLINGHAM, WA 98225
p.360.734.4744 - zervasgroup.com

9587 REGISTERED ARCHITECT
ANDREW J. KRZYSIEK
STATE OF WASHINGTON

GENERAL NOTES

1. ALL INTERIOR WALLS TYPE "1" UNLESS NOTED OTHERWISE. OMIT GWB ON INTERIOR SIDE OF ALL MECHANICAL AND PLUMBING CHASE WALLS, TYP.
2. WALL DIMENSIONS ARE TO FACE OF STUD AND CONCRETE UNLESS NOTED OTHERWISE, TYP.
3. WHERE DOORS ARE SHOWN NEAR ADJACENT WALL PROVIDE 4" FROM DOOR OPENING TO FACE OF STUD OR CONCRETE UNLESS NOTED OTHERWISE, TYP.
4. FOR CLOCK/SPEAKERS PROVIDE BLOCKING/FRAMING PER MFR., SEE ELEC. FOR DEVICES AND LOCATION, SEE STRUCT. FOR TYPICAL OPENING REQUIREMENTS.

(1) 48" HIGH WALL, SEE STRUCT. FOR BOTTOM TRACK REQUIREMENTS

City of Puyallup
Development & Permitting Services
ISSUED PERMIT
Building | Planning | Engineering | Public Works | Fire | Traffic

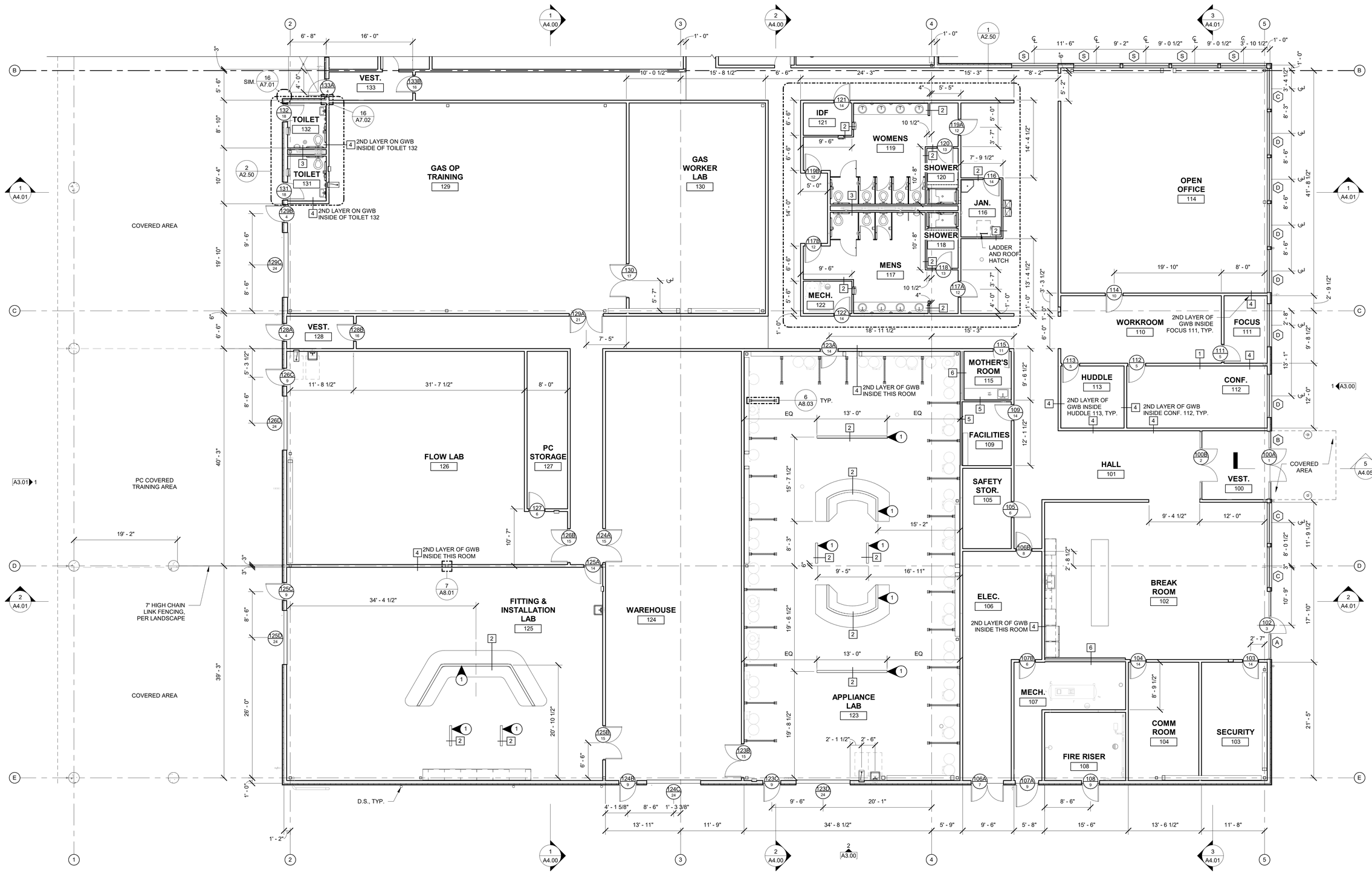

(1) ENLARGED FLOOR PLAN
1/8" = 1'-0"

100% CD SET

REV	ISSUED FOR	DATE

NORTH. | PLAN.

SCALE.
As indicated

PSE OPERATIONAL TRAINING CENTER

OTC BUILDING ENLARGED FLOOR PLAN

PROJECT#.			202202.06
DRAWN.	MR	CHECK.	AK
ISSUED.			01/26/24

A2.21

202202.06
Autodesk Docs://7222 - 5111 - PSE North Bend Precon Design/PSE-OTC_Current.rvt

2018 IBC ANALYSIS - CONTROL HOUSE

THE FOLLOWING IS A PARTIAL LISTING OF REQUIREMENTS, ALL APPLICABLE CODES TO APPLY

CHAPTER 3 - USE AND OCCUPANCY CLASSIFICATION:

A. BUSINESS, GROUP B: VOCATIONAL SCHOOL

CHAPTER 5 - GENERAL BUILDING HEIGHTS AND AREAS:

BUILDING TO BE CONSTRUCTION TYPE V-B, NON-SPRINKLERED

A. PER TABLE 504.3 ALLOWABLE BUILDING HEIGHT IN FEET ABOVE GRADE PLANE
1. OCCUPANCY GROUP 'B' ALLOWABLE: 40'-0" PROPOSED: 16'-0"

B. PER TABLE 504.4 ALLOWABLE NUMBER OF STORIES ABOVE GRADE PLANE
1. OCCUPANCY GROUP 'B' ALLOWABLE: 2 STORIES PROPOSED: 1 STORIES

C. PER TABLE 506.2 ALLOWABLE AREA FACTOR IN SQUARE FEET
1. OCCUPANCY GROUP 'B' ALLOWABLE: 9,000 SF PROPOSED: 332 SF

CHAPTER 6 - TYPES OF CONSTRUCTION:

A. PER TABLE 601 FOR TYPE 'V-B' BUILDING ELEMENTS NO FIRE RESISTANCE REQUIREMENTS.

B. FIRE-RESISTANCE RATING (HRS) OF EXTERIOR WALLS PER TABLE 602
1. FIRE-SEPARATION DISTANCE = ≥10', FIRE RATING REQUIRED = 0

CHAPTER 8 - INTERIOR FINISHES:

A. INTERIOR WALL AND CEILING FINISH REQUIREMENTS FOR GROUP E PER TABLE 803.13
1. NONSPRINKLERED
a. EXIT ENCLOSURES AND PASSAGEWAYS = A
b. CORRIDORS = C
c. ROOMS AND ENCLOSED SPACES = C

CHAPTER 9 - FIRE PROTECTION SYSTEMS:

A. PER SECTION 906 PORTABLE FIRE EXTINGUISHERS SHALL BE PROVIDED
1. SIZE AND DISTRIBUTION PER TABLE 906.3.(1) LIGHT HAZARD OCCUPANCY
a. MINIMUM RATED SINGLE EXTINGUISHER = 2A
b. MAXIMUM FLOOR AREA PER UNIT OF A = 3,000 SQ.FT.
c. MAXIMUM FLOOR AREA FOR EXTINGUISHER = 11,250 SQ.FT.
d. MAXIMUM TRAVEL DISTANCE TO EXTINGUISHER = 75'

CHAPTER 10 - MEANS OF EGRESS:

A. SECTION 1004 DESIGN OCCUPANT LOAD PER TABLE 1004.5: EDUCATIONAL, SHOPS AND OTHER VOCATIONAL AREAS.
1. 306 SF / 50 NET = 7 OCCUPANTS

B. SECTION 1005.3.2 OTHER EGRESS COMPONENTS
1. EGRESS COMPONENTS: OCCUPANT LOAD SERVED X 0.2
a. PROPOSED MAXIMUM: 7 X 0.2 = 2" (32" REQUIRED), 33" PROVIDED

C. PER TABLE 1006.2.1 SPACES WITH ONE EXIT OR EXIT ACCESS DOORWAY
1. MAXIMUM OCCUPANT LOAD
a. B OCCUPANCY: ALLOWABLE - 49

D. SECTION 1017 EXIT ACCESS TRAVEL DISTANCE PER TABLE 1017.2
1. B OCCUPANCIES, ALLOWABLE: 200'-0" WITHOUT A SPRINKLER SYSTEM.
a. PROPOSED MAXIMUM: 20'-10"

2018 WSEC ANALYSIS - CONTROL HOUSE

C406 EFFICIENCY PACKAGES:

A. SECTION C406 EFFICIENCY PACKAGES
C406.1 ADDITIONAL ENERGY EFFICIENCY CREDIT REQUIREMENTS
1. FULLY CONDITIONED:

Code Section	Commercial Building Occupancy					
	Group R-1	Group R-2	Group B	Group E	Group M	All Other
	Additional Efficiency Credits					
1. More efficient HVAC performance in accordance with Section C406.2	2.0	3.0	3.0	2.0	1.0	2.0
2. Reduced lighting power: Option 1 in accordance with Section C406.3.1	1.0	1.0	2.0	2.0	3.0	2.0
3. Reduced lighting power: Option 2 in accordance with Section C406.3.2[a]	2.0	3.0	4.0	4.0	6.0	4.0
4. Enhanced lighting controls in accordance with Section C406.4	NA	NA	1.0	1.0	1.0	1.0
5. On-site supply of renewable energy in accordance with C406.5	3.0	3.0	3.0	3.0	3.0	3.0
6. Dedicated outdoor air system in accordance with Section C406.6[b]	4.0	4.0	4.0	NA	NA	4.0
7. High performance dedicated outdoor air system in accordance with Section C406.7	4.0	4.0	4.0	4.0	4.0	4.0
8. High-efficiency service water heating in accordance with Sections C406.8.1 and C406.8.2	4.0	5.0	NA	NA	NA	8.0
9. High performance service water heating in multi-family buildings in accordance with Section C406.9	7.0	8.0	NA	NA	NA	NA
10. Enhanced envelope performance in accordance with Section C406.10[c]	3.0	6.0	3.0	3.0	3.0	4.0
11. Reduced air infiltration in accordance with Section C406.11[c]	1.0	2.0	1.0	1.0	1.0	1.0
12. Enhanced commercial kitchen equipment in accordance with Section C406.12	5.0	NA	NA	NA	5.0	5.0 (Group A-2 only)

2018 WSEC GENERAL NOTES:

1. PRESCRIPTIVE ENVELOPE THERMAL COMPLIANCE PATH. SEE ENVELOPE COMPLIANCE REPORT.
2. ALL RELIEF, OUTSIDE AIR INTAKE AND EXHAUST OPENINGS SHALL BE PROVIDED WITH DAMPERS IN ACCORDANCE WITH MECHANICAL SECTION C403.7.8.
3. BUILDING ENCLOSURE AIR LEAKAGE TESTING IS REQUIRED FOR WSEC COMPLIANCE AND SHALL BE PERFORMED PER ASTM C779 (OR EQUIVALENT METHOD APPROVED BY THE CODE OFFICIAL) AND THE BUILDING ENCLOSURE AIR LEAKAGE TEST RESULTS SHALL NOT EXCEED 0.25 CFM/FT2 AT 0.3 IN. WG (75 PA); ALL DOCUMENTATION REQUIREMENTS PER C103.2 AND C402.5.1.2 APPLY.
4. BUILDING ENCLOSURE AIR LEAKAGE TESTING CONTRACTOR REQUIREMENTS:
A. SUBMIT BUILDING ENCLOSURE AIR LEAKAGE TEST REPORTS TO JURISDICTION AND OWNER.
B. IF INITIAL TEST RESULT EXCEEDS 0.25 CFM/FT2 (1.5 L/S*M2), INSPECTION AND ALL PRACTICAL CORRECTIVE ACTIONS SHALL BE COMPLETED AND DOCUMENTED IN THE AIR LEAKAGE TEST REPORT.
C. IF INITIAL TEST RESULT EXCEEDS 0.40 CFM/FT2 (2.0 L/S*M2), CORRECTIVE ACTIONS SHALL ALSO INCLUDE RE-TESTING.
D. CORRECTIVE MEASURES AND RETESTING MUST BE REPEATED UNTIL THE TEST RESULT IS 0.40 CFM/FT2 (2.0 L/S*M2) OR LESS.
E. INCLUDE AIR BARRIER TEST REPORT IN PROJECT CLOSE OUT DOCUMENTATION PROVIDED TO BUILDING OWNER.
5. PROJECT CLOSE OUT DOCUMENTATION IS REQUIRED TO BE PROVIDED BY THE CONTRACTOR INCLUDING APPLICABLE CALCULATIONS, WSEC ENVELOPE COMPLIANCE REPORTS, AND FENESTRATION NFRC RATING CERTIFICATES PER C103.6.3.

2018 WSEC ENVELOPE COMPLIANCE REPORT - CONTROL HOUSE

ENVELOPE COMPLIANCE SUMMARY

2018 WSEC Compliance Forms for Commercial Buildings including Group R2, R3 & R4 over 3 stories and all R1 — Administered by: ©2023 NEEA, All rights reserved

Project & Applicant Information	Project Title	PSE Operational Training Center - Control House - 2018 WSEC	For Building Department Use: Date: Nov 01, 2023
	Project Address	325 Todd Road NW Puyallup, WA 98371	
	Applicant Name	Matt Reeves	
	Applicant Phone	360-734-4744	
	Applicant Email	matt@zervasgroup.com	

For questions about this report, contact WSEC Commercial Technical Support at 360-539-5300 or via email at com.techsupport@waenergycodes.com

General Occupancy	All Commercial	General Building Use Type(s)	Education, Vocational	Building Cond. Floor Area	332
Project Scope	New Building	Space Conditioning Categories	Fully Conditioned	Project Cond. Floor Area	332
				Floors Above Grade	1
				Compliance Method	Compliance Method 1 - General
Envelope Project Description	A separate substation control house for training purposes.				

Envelope Compliance Scope and Method	Scope	Space Conditioning Category	Compliance Method	WWR/SRR per Category	UA Calculation Adjustment	Fenestration Alternates	Compliance Verification
	New Building	Fully Conditioned	Prescriptive	0% / 0%	None selected	No alternates selected	COMPLIES

Air Barrier Testing	Air barrier testing included in project scope	Air Barrier Comments	

Project Title	PSE Operational Training Center - Control House - 2018 WSEC	Date	Nov 01, 2023
Scope & Space Conditioning	NEW BUILDING - FULLY CONDITIONED	Compliance Verification	COMPLIES
Window-to-wall Ratio	0%	Skylight-to-roof-ratio	0%
Vertical Fenestration Alternate	No alternates selected		

Opaque Envelope Assemblies

Roof/Ceiling	Location in Documents	Assembly ID	Assembly Location	Insulation R-Values: Cavity	Continuous (% penetration)	2nd Layer (MB Roof)	U-Factor	Net Area (SF)
Insulation entirely above deck	G0.04, Roof Type #3	RF-3	Exterior	R-38 (< 0.04%)				384
	U-Factor Source:			U-Factor Source Description:				
	Is this assembly exterior or interior?: Exterior							

Walls	Location in Documents	Assembly ID	Assembly Location	Cavity	Continuous (% penetration)	Insulated Wall Furring	U-Factor	Net Area (SF)
Mass (concrete masonry) - Commercial	G0.04, Exterior Wall Type #3	WL-3	Yes	R-10 (< 0.04%)		Yes		936
	Is CMU wall eligible for wall insulation exception?: No			Percentage of CMU cores filled with insulation: (Select One)				
	Space type enclosed by CMU walls: (Select One)			Does assembly include wall furring?: Yes				
	Wall Furring Material: Steel-frame			Framing Depth:				
	Framing Spacing:			U-Factor Source:				
	U-Factor Source Description:							

Slab-on-grade Floors	Location in Documents	Assembly ID	Assembly Location	Slab Edge	Under Slab		F-Factor	Perimeter Length (SF)
Unheated slab	G0.04, Floor Type #1	FL-1	At grade level	R-10				77
	Slab Insulation Method: 4 ft horizontal (no slab edge insulation)			F-Factor Source:				
	F-Factor Source Description:							

Fenestration & Opaque Door Assemblies

Opaque Doors	Location in Documents	Assembly ID	Assembly Location	Insulation R-Values: Door Insulation			U-Factor	Rough Opening (SF)
Swinging	A3.03, Door Types	Door Type A	Exterior				U-0.37	46
	What percentage of this opaque door is glazing?: 50% or less			U-Factor Source:				
	U-Factor Source Description:			Is this assembly exterior or interior?: Exterior				
	Is this a public entrance door?: No							

DOOR SYMBOL

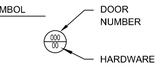

DOOR NUMBER

HARDWARE GROUP

1. ALL DOOR 1-3/4" THICK UNLESS OTHERWISE NOTED
2. DOOR CONSTRUCTION:
TYPICAL=SOLID-CORE-WOOD
HM=HOLLOW-METAL
AL=ALUMINUM&GLASS
MFR=PER-MANUFACTURER
3. FACING & FINISH
MP=METAL-PAINTED
PL=PLASTIC-LAMINATE
AL=ALUMINUM
MFR=PER-MANUFACTURER
4. GLASS
SI = PROVIDE SEALED INSULATING GLASS UNITS AT ALL EXTERIOR DOORS & SIDELIGHTS, U.N.O.
SL = PROVIDE SINGLE SAFETY LAMINTED GLAZING AT ALL INTERIOR DOORS & SIDELIGHTS, U.N.O.
SG = SECURITY GRADE LAMINATED GLAZING
5. DOOR TYPES:
OW = OPERABLE WALL
CD = COILING DOOR
SD = SECTIONAL DOOR
6. PROVIDE SWEEPS AND GASKETS ON ALL DOOR EDGES.
7. SEE MECH FOR SIZE AND LOCATION OF GRILLES IN DOORS, TYP.
8. ALL OPAQUE EXTERIOR SWINGING DOORS TO HAVE AN OVERALL ASSEMBLY U-FACTOR OF 0.37 OR LESS. SEE WSEC ENVELOPE COMPLIANCE SUMMARY.
9. INSTALL GASKETING AND WEATHER STRIPPING AT ALL EXTERIOR DOORS.

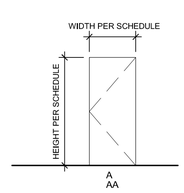

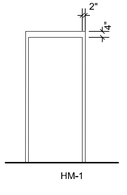

DOOR SCHEDULE NOTES
1/4" = 1'-0"

DOOR TYPES
1/4" = 1'-0"

DOOR FRAME TYPES
1/4" = 1'-0"

DOOR #	DOOR SIZE	DOOR TYPE	THICK. (1)	DOOR CONST. (2)	FACING / FINISH (3)	GLASS (4)	FRAME TYPE	FRAME CONST.	FIRE RATING	HARDWARE GROUP	NOTES
CH-01	3'-0" X 7'-0"	A	1-3/4"	HM	MP	SI	1	HM	-	26	
CH-02	3'-0" X 7'-0"	A	1-3/4"	HM	MP	SI	1	HM	-	26	

Door hardware groups are provided in the specifications (project manual). See 08 71 00 Finish Hardware, page 204 Door Hardware Schedule.

DOOR SCHEDULE - CONTROL HOUSE

LIFE SAFETY AND 2018 WSEC LEGEND

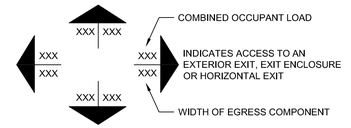

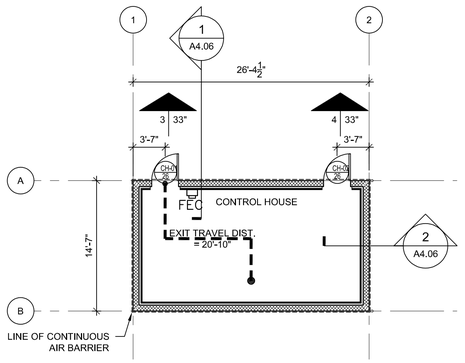

CONTROL HOUSE FLOOR PLAN
1/8" = 1'-0"

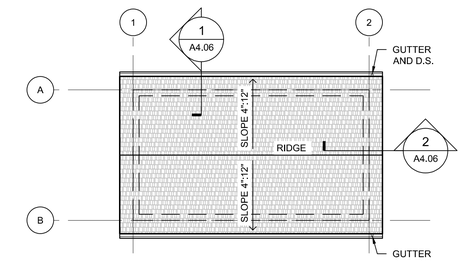

CONTROL HOUSE ROOF PLAN
1/8" = 1'-0"

PRCNC20240216

ZERVAS
ARCHITECTURE | INTERIOR DESIGN
zervasgroup.com
209 Prospect Street
Bellingham, WA 98225
360.734.4744

9587 REGISTERED ARCHITECT
ANDREW J. KRZYSIEK
STATE OF WASHINGTON

City of Puyallup
Development & Permitting Services
ISSUED PERMIT
Building | Planning | Engineering | Public Works | Fire | Traffic

100% CD SET

REV	ISSUED FOR	DATE

PLAN NORTH | TRUE NORTH

SCALE: 1/8"=1'-0" 0 8'

PSE - OPERATIONAL TRAINING CENTER

OUTDOOR TRAINING CONTROL HOUSE PLANS, CODE, SCHED

PROJECT No:	202202.06
DRAWN BY:	MR
CHECKED BY:	AK
DATE ISSUED:	01/26/24

A2.22

© 2023

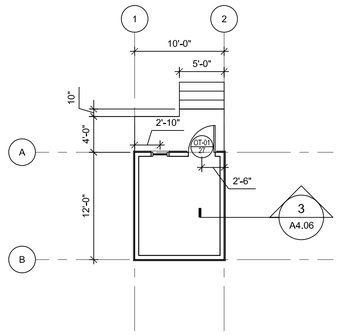

1 "VILLAGE" UNIT FLOOR PLAN, TYP. OF 11
1/8" = 1'-0"

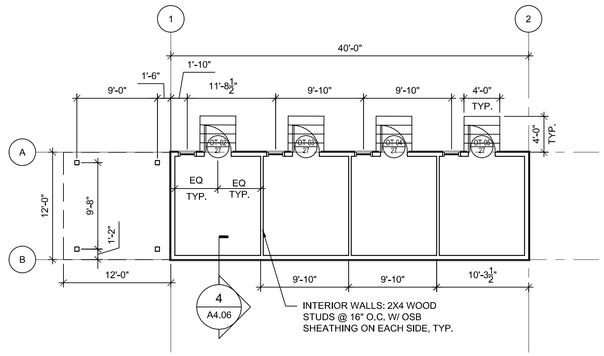

2 4-PLEX BUILDING UNIT FLOOR PLAN, TYP. OF 2
1/8" = 1'-0"

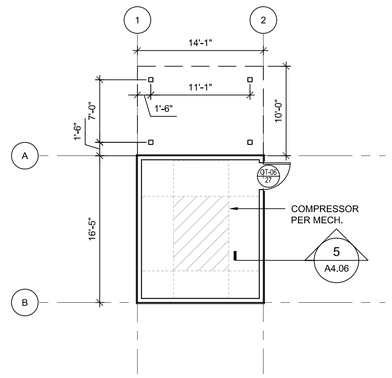

3 COMPRESSOR BUILDING FLOOR PLAN
1/8" = 1'-0"

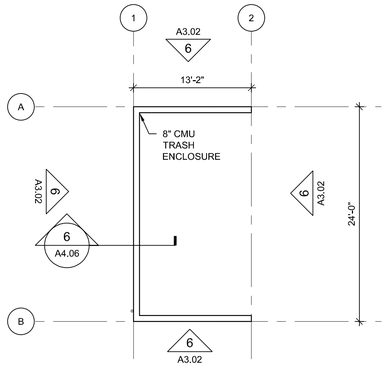

4 TRASH ENCLOSURE FLOOR PLAN
1/8" = 1'-0"

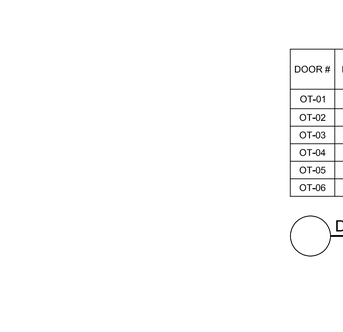

5 "VILLAGE" UNIT ROOF PLAN, TYP.
1/8" = 1'-0"

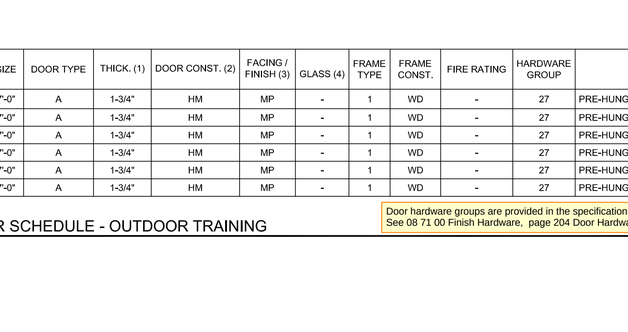

6 4-PLEX BUILDING UNIT ROOF PLAN, TYP.
1/8" = 1'-0"

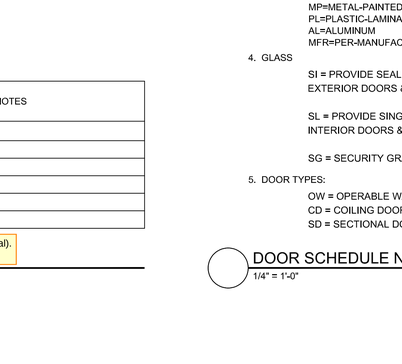

7 COMPRESSOR BUILDING ROOF PLAN
1/8" = 1'-0"

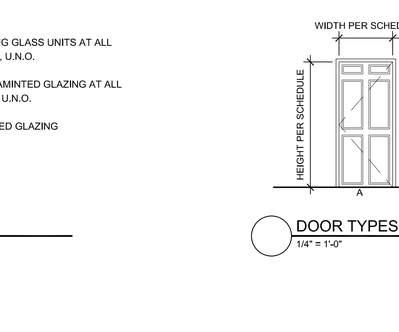

8 TRASH ENCLOSURE ROOF PLAN
1/8" = 1'-0"

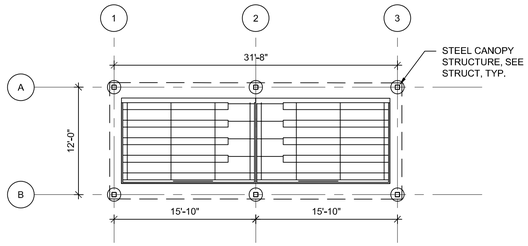

9 COVERED BLEACHERS FLOOR PLAN
1/8" = 1'-0"

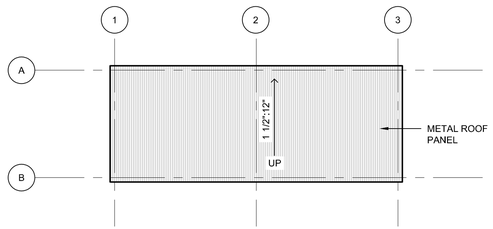

10 COVERED BLEACHERS ROOF PLAN
1/8" = 1'-0"

DOOR #	DOOR SIZE	DOOR TYPE	THICK. (1)	DOOR CONST. (2)	FACING / FINISH (3)	GLASS (4)	FRAME TYPE	FRAME CONST.	FIRE RATING	HARDWARE GROUP	NOTES
OT-01	3'-0" X 7'-0"	A	1-3/4"	HM	MP	-	1	WD	-	27	PRE-HUNG DOORS
OT-02	3'-0" X 7'-0"	A	1-3/4"	HM	MP	-	1	WD	-	27	PRE-HUNG DOORS
OT-03	3'-0" X 7'-0"	A	1-3/4"	HM	MP	-	1	WD	-	27	PRE-HUNG DOORS
OT-04	3'-0" X 7'-0"	A	1-3/4"	HM	MP	-	1	WD	-	27	PRE-HUNG DOORS
OT-05	3'-0" X 7'-0"	A	1-3/4"	HM	MP	-	1	WD	-	27	PRE-HUNG DOORS
OT-06	3'-0" X 7'-0"	A	1-3/4"	HM	MP	-	1	WD	-	27	PRE-HUNG DOORS

Door hardware groups are provided in the specifications (project manual).
See 08 71 00 Finish Hardware, page 204 Door Hardware Schedule.

DOOR SCHEDULE - OUTDOOR TRAINING

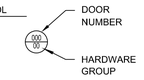

1. ALL DOOR 1-3/4" THICK UNLESS OTHERWISE NOTED
2. DOOR CONSTRUCTION:

   TYPICAL=SOLID-CORE-WOOD
   HM=INSULATED-HOLLOW-METAL
   AL=ALUMINUM&GLASS
   MFR=PER-MANUFACTURER

3. FACING & FINISH

   MP=METAL-PAINTED
   PL=PLASTIC-LAMINATE
   AL=ALUMINUM
   MFR=PER-MANUFACTURER

4. GLASS

   SI = PROVIDE SEALED INSULATING GLASS UNITS AT ALL EXTERIOR DOORS & SIDELIGHTS, U.N.O.

   SL = PROVIDE SINGLE SAFETY LAMINTED GLAZING AT ALL INTERIOR DOORS & SIDELIGHTS, U.N.O.

   SG = SECURITY GRADE LAMINATED GLAZING

5. DOOR TYPES:

   OW = OPERABLE WALL
   CD = COILING DOOR
   SD = SECTIONAL DOOR

DOOR SCHEDULE NOTES
1/4" = 1'-0"

DOOR TYPES
1/4" = 1'-0"

PRCNC20240216

ZERVAS
ARCHITECTURE | INTERIOR DESIGN
zervasgroup.com
209 Prospect Street
Bellingham, WA 98225
360.734.4744

9587 REGISTERED ARCHITECT
ANDREW J. KRZYSIEK
STATE OF WASHINGTON

City of Puyallup
Development & Permitting Services
ISSUED PERMIT
Building | Planning
Engineering | Public Works
Fire | Traffic

100% CD SET

REV	ISSUED FOR	DATE

PLAN NORTH | TRUE NORTH
SCALE: 1/8"=1'-0" 0 8'

PSE - OPERATIONAL TRAINING CENTER

OUTDOOR TRAINING PLANS AND DOOR SCHEDULE

PROJECT No:	202202.06
DRAWN BY:	MR
CHECKED BY:	AK
DATE ISSUED:	01/26/24

A2.23

© 2023

1/26/2024 2:14:29 PM

PRCNC20240216

ZERVAS
209 PROSPECT STREET - BELLINGHAM, WA 98225
p.360.734.4744 - zervasgroup.com

9587 REGISTERED ARCHITECT
ANDREW J. KRZYSIEK
STATE OF WASHINGTON

GENERAL NOTES

1. CENTER PENDANTS IN CORRIDORS, SPACE EQUALLY

CL-1	PAINTED GWB CEILING
CL-2	SUSPENDED CEILING SYSTEM W/ 2X4 ACOUSTIC CEILING TILES
CL-3	FIBER CEMENT SOFFIT PANEL
OTS	OPEN TO STRUCTURE

City of Puyallup
Development & Permitting Services
ISSUED PERMIT

Building	Planning
Engineering	Public Works
Fire	Traffic

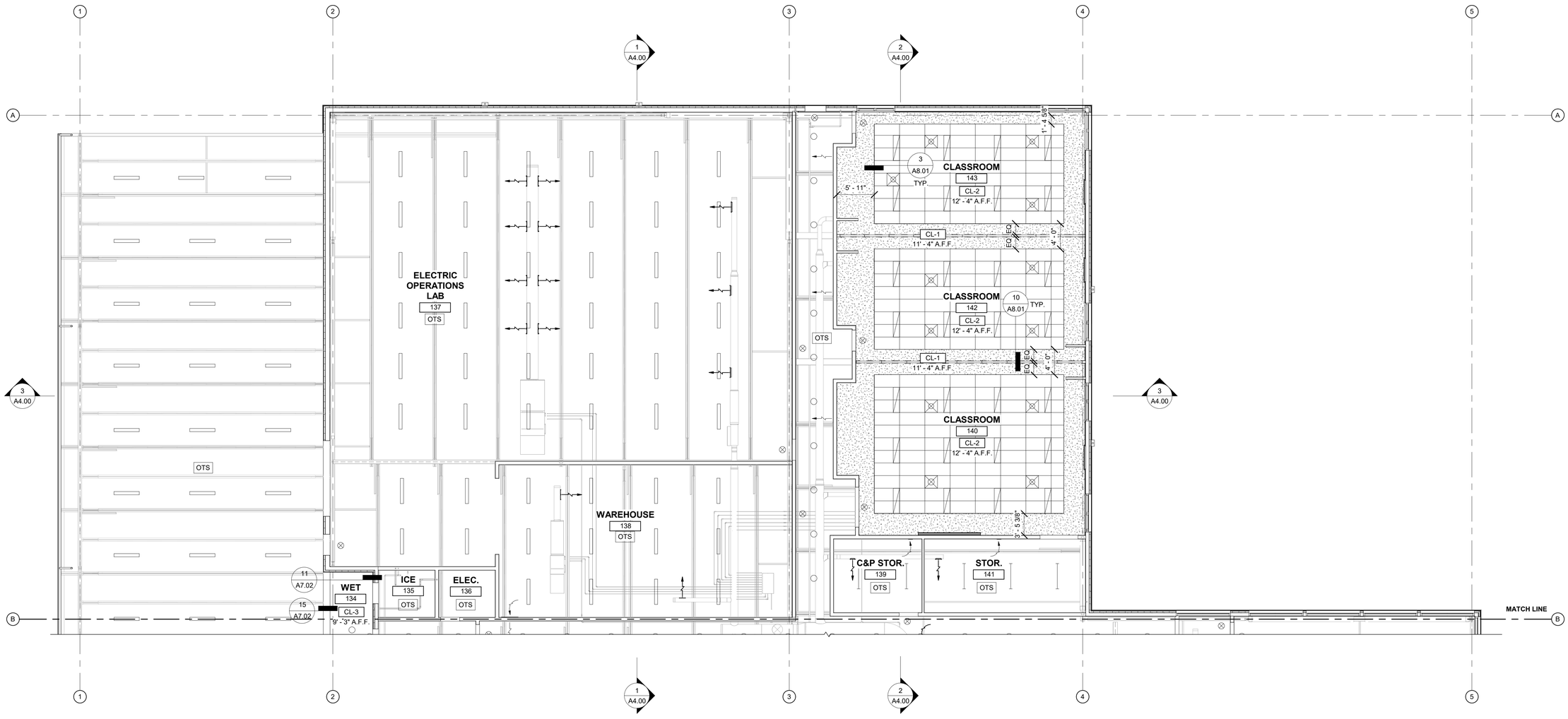

1 REFLECTED CEILING PLAN
1/8" = 1'-0"

100% CD SET

REV	ISSUED FOR	DATE

NORTH. PLAN.

SCALE.
As indicated

PSE
OPERATIONAL
TRAINING
CENTER

OTC BUILDING
ENLARGED RCP

PROJECT#			202202.06
DRAWN.	DL	CHECK.	MR
ISSUED.			01/26/24

A2.30

202202.06
Autodesk Docs://7222 - 5111 - PSE North Bend Precon Design/PSE-OTC_Current.rvt

1/26/2024 2:14:38 PM

GENERAL NOTES

1. CENTER PENDANTS IN CORRIDORS, SPACE EQUALLY

CL-1	PAINTED GWB CEILING
CL-2	SUSPENDED CEILING SYSTEM W/ 2X4 ACOUSTIC CEILING TILES
CL-3	FIBER CEMENT SOFFIT PANEL
OTS	OPEN TO STRUCTURE

PRCNC20240216

ZERVAS
209 PROSPECT STREET - BELLINGHAM, WA 98225
p.360.734.4744 - zervasgroup.com

9587 REGISTERED ARCHITECT
ANDREW J. KRZYSIEK
STATE OF WASHINGTON

City of Puyallup
Development & Permitting Services
ISSUED PERMIT
Building | Planning | Engineering | Public Works | Fire | Traffic

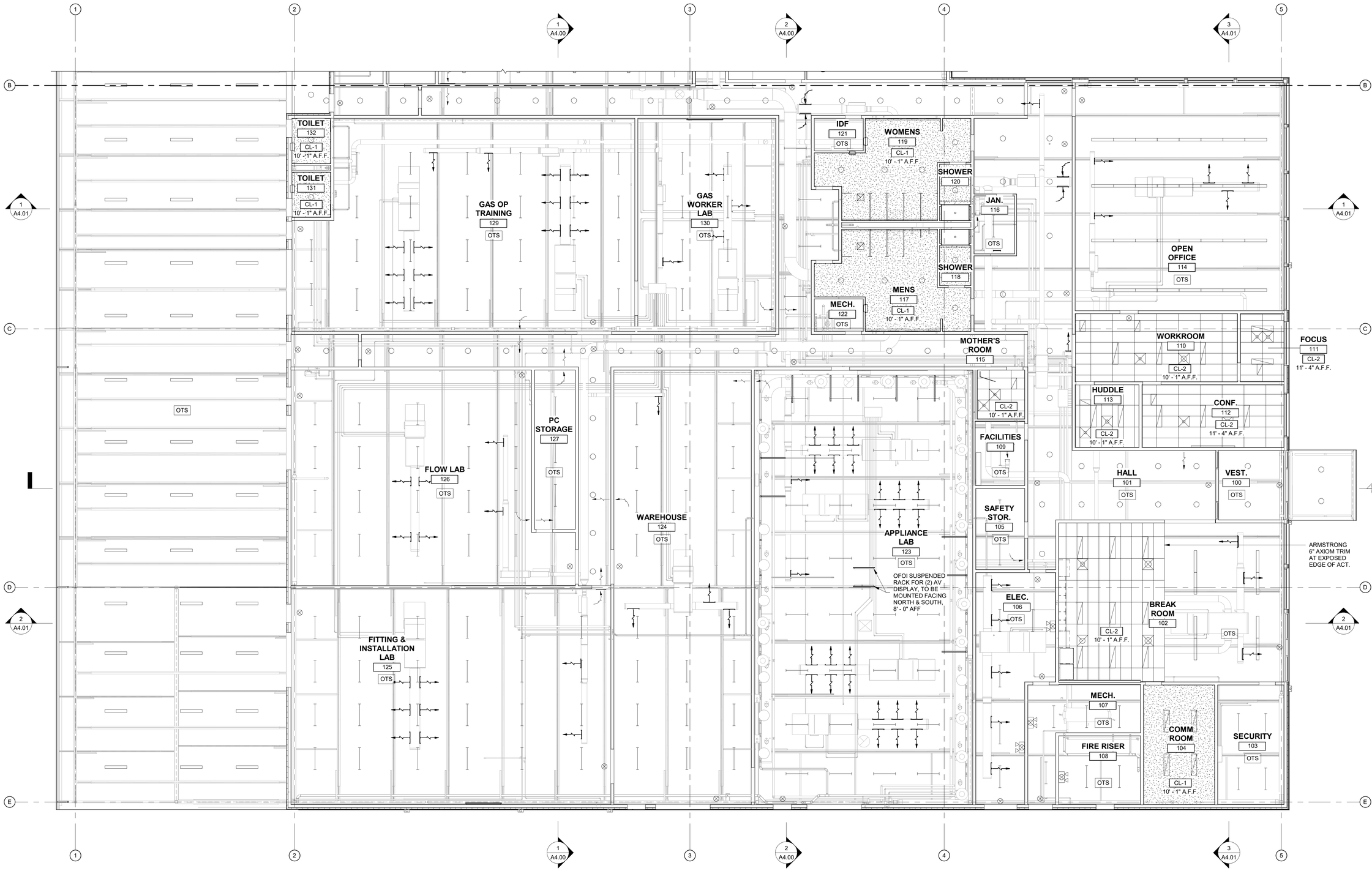

1 REFLECTED CEILING PLAN
1/8" = 1'-0"

100% CD SET

REV	ISSUED FOR	DATE

NORTH. PLAN.

SCALE.
As indicated

PSE OPERATIONAL TRAINING CENTER

OTC BUILDING ENLARGED RCP

PROJECT#.			202202.06
DRAWN.	DL	CHECK.	MR
ISSUED.			01/26/24

A2.31

202202.06
Autodesk Docs://7222 - 5111 - PSE North Bend Precon Design/PSE-OTC_Current.rvt

1/26/2024 2:14:41 PM

PRCNC20240216

ZERVAS
209 PROSPECT STREET - BELLINGHAM, WA 98225
p.360.734.4744 - zervasgroup.com

9587 REGISTERED ARCHITECT
ANDREW J. KRZYSIEK
STATE OF WASHINGTON

City of Puyallup
Development & Permitting Services
ISSUED PERMIT

Building	Planning
Engineering	Public Works
Fire	Traffic

GENERAL NOTES

REFERENCE SHEET A5.00 FOR MOUNTING HEIGHTS

EQUIPMENT SCHEDULE		
Type Mark	Description	Install
1	Bobrick Toilet Grab Bars	CFCI
2	Bobrick Recessed Towel and Waste Unit, B-43944	CFCI
3	Bobrick Soap Dispenser, B-4112	CFCI
4	Bobrick Seat Cover Dispenser, B-4221	CFCI
5	Bobrick Sanitary Napkin Disposal, B-270	CFCI
6	Bobrick Multi-roll Toilet Tissue Dispenser, B-4288	CFCI
7	Bobrick Shower Curtain Rod, B-207x72	CFCI
8	Bobrick Vinyl Shower Curtain, B-204-3	CFCI
9	Bobrick Single Robe Hook, B-76717	CFCI
10	Bobrick Semi-Recessed Tampon Vendor, B-370634	CFCI
11	Bobrick Channel-Frame Mirror, B-165 2436	CFCI

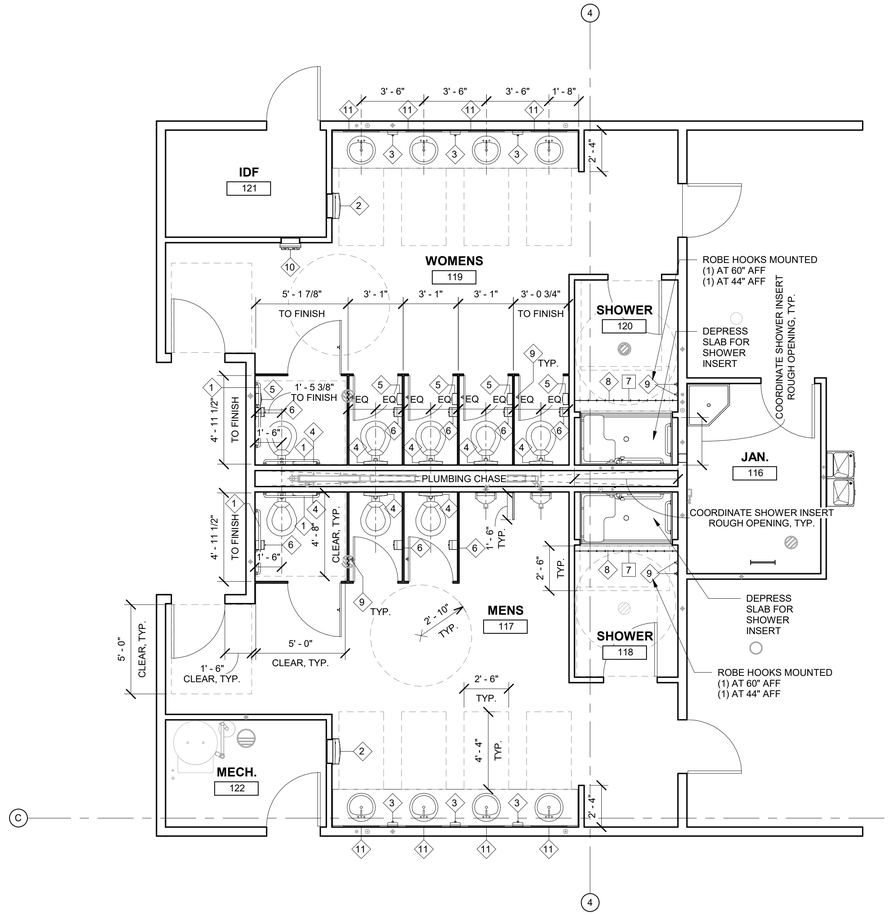

1 MENS 117 AND WOMENS 119
1/4" = 1'-0"

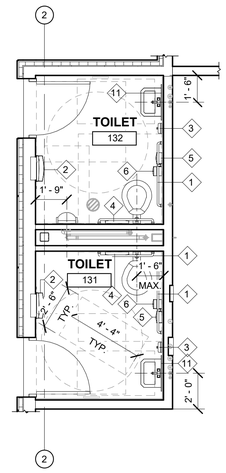

2 TOILETS 131 & 132
1/4" = 1'-0"

100% CD SET

REV	ISSUED FOR	DATE

NORTH. PLAN.

SCALE.
As indicated

PSE OPERATIONAL TRAINING CENTER

ENLARGED RESTROOM PLANS

PROJECT#.			202202.06
DRAWN.	SD	CHECK.	MR
ISSUED.			01/26/24

A2.50

202202.06
Autodesk Docs://7222 - 5111 - PSE North Bend Precon Design/PSE-OTC_Current.rvt

1/26/2024 2:14:50 PM

PRCNC20240216

ZERVAS
209 PROSPECT STREET - BELLINGHAM, WA 98225
p.360.734.4744 - zervasgroup.com

9587 REGISTERED ARCHITECT
ANDREW J. KRZYSIEK
STATE OF WASHINGTON

SIDING TYPE LEGEND

TYPE 1	FIBER CEMENT PANEL
TYPE 2	FIBER CEMENT LAP
TYPE 3	METAL PANEL

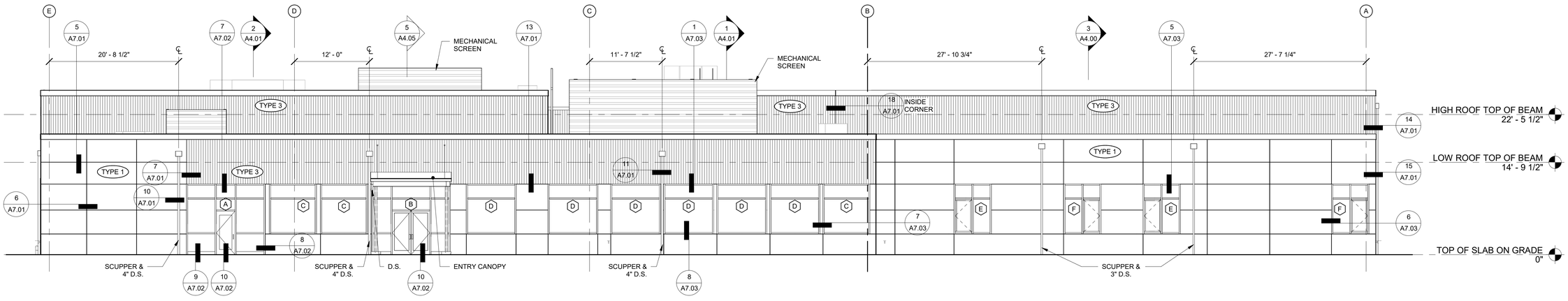

1 EAST EXTERIOR ELEVATION
1/8" = 1'-0"

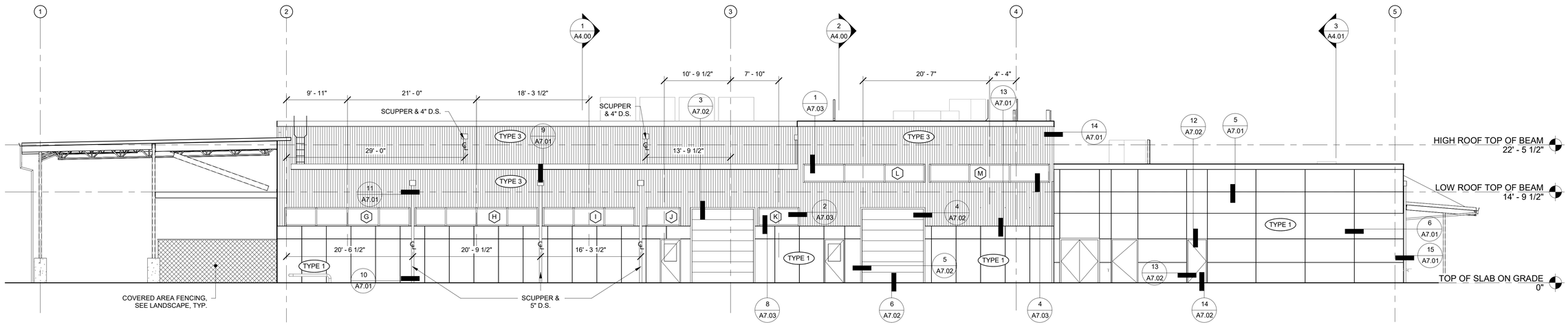

2 SOUTH EXTERIOR ELEVATION
1/8" = 1'-0"

City of Puyallup
Development & Permitting Services
ISSUED PERMIT
Building | Planning | Engineering | Public Works | Fire | Traffic

100% CD SET

REV	ISSUED FOR	DATE

NORTH. PLAN.

SCALE.
As indicated

PSE OPERATIONAL TRAINING CENTER

EXTERIOR ELEVATIONS

PROJECT#			202202.06
DRAWN.	MR	CHECK.	AK
ISSUED.			01/26/24

A3.00

202202.06
Autodesk Docs://7222 - 5111 - PSE North Bend Precon Design/PSE-OTC_Current.rvt

1/26/2024 2:14:57 PM

PRCNC20240216

ZERVAS
209 PROSPECT STREET - BELLINGHAM, WA 98225
p.360.734.4744 - zervasgroup.com

SIDING TYPE LEGEND

TYPE 1	FIBER CEMENT PANEL
TYPE 2	FIBER CEMENT LAP
TYPE 3	METAL PANEL

9587 REGISTERED ARCHITECT
ANDREW J. KRZYSIEK
STATE OF WASHINGTON

City of Puyallup
Development & Permitting Services
ISSUED PERMIT
Building | Planning | Engineering | Public Works | Fire | Traffic

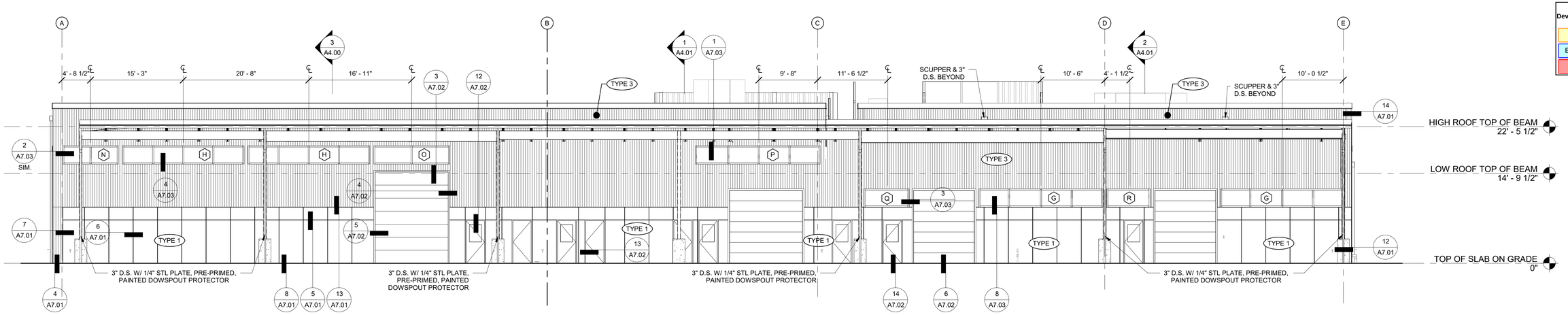

1 WEST EXTERIOR ELEVATION
1/8" = 1'-0"

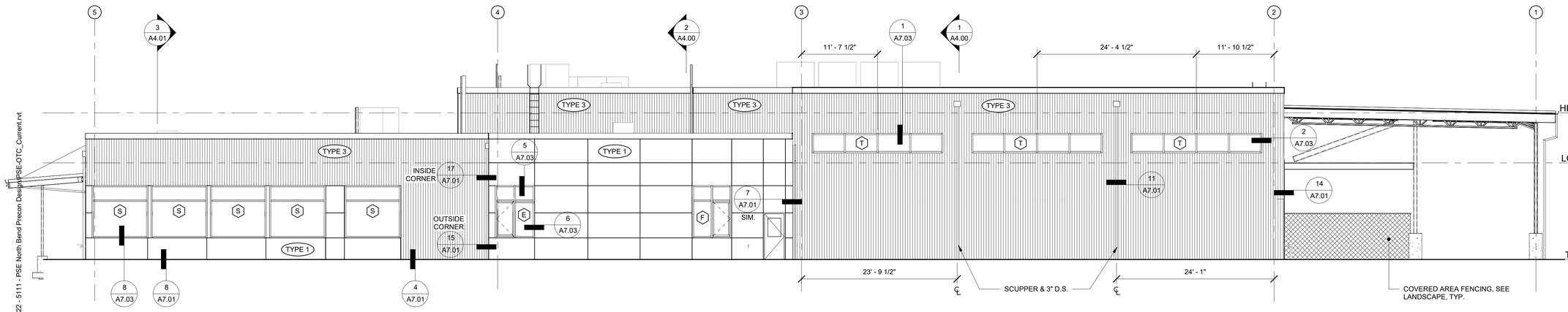

2 NORTH EXTERIOR ELEVATION
1/8" = 1'-0"

100% CD SET

REV	ISSUED FOR	DATE

NORTH. PLAN.

SCALE.
As indicated

PSE OPERATIONAL TRAINING CENTER

EXTERIOR ELEVATIONS

PROJECT#.	202202.06
DRAWN. MR	CHECK. AK
ISSUED.	01/26/24

A3.01

202202.06
Autodesk Docs://7222 - 5111 - PSE North Bend Precon Design/PSE-OTC_Current.rvt

PRCNC20240216

ZERVAS
ARCHITECTURE | INTERIOR DESIGN
zervasgroup.com
209 Prospect Street
Bellingham, WA 98225
360.734.4744

9587 REGISTERED ARCHITECT
ANDREW J. KRZYSIEK
STATE OF WASHINGTON

City of Puyallup
Development & Permitting Services
ISSUED PERMIT
Building | Planning | Engineering | Public Works | Fire | Traffic

SIDING TYPE LEGEND:

1 FIBER CEMENT PANEL

2 FIBER CEMENT LAP

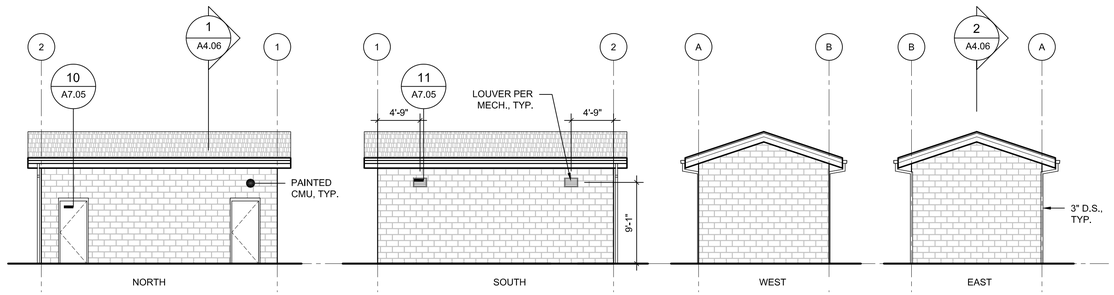

1 CONTROL HOUSE EXTERIOR ELEVATIONS

1/8" = 1'-0"

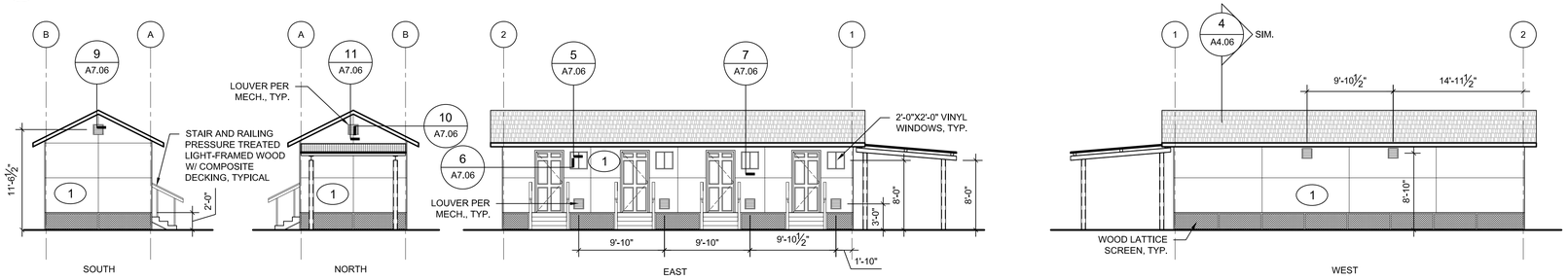

2 MULTI-UNIT COMMERCIAL 4 -PLEX BUILDING EXTERIOR ELEVATIONS

1/8" = 1'-0"

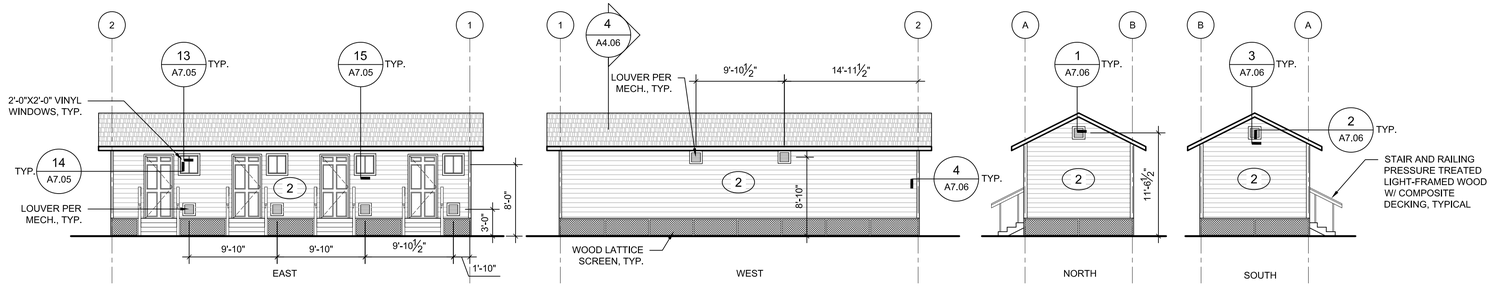

3 RESIDENTIAL MULTI-FAMILY 4 -PLEX BUILDING EXTERIOR ELEVATIONS

1/8" = 1'-0"

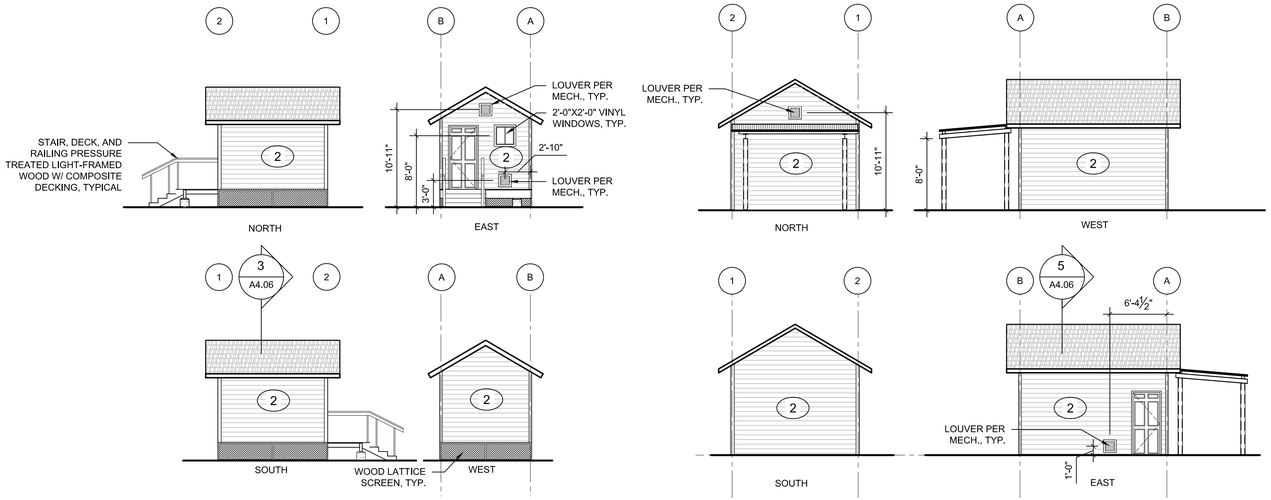

4 COMMERCIAL/RESIDENTIAL "VILLAGE" UNITS EXTERIOR ELEVATIONS

1/8" = 1'-0"

5 COMPRESSOR BUILDING EXTERIOR ELEVATIONS

1/8" = 1'-0"

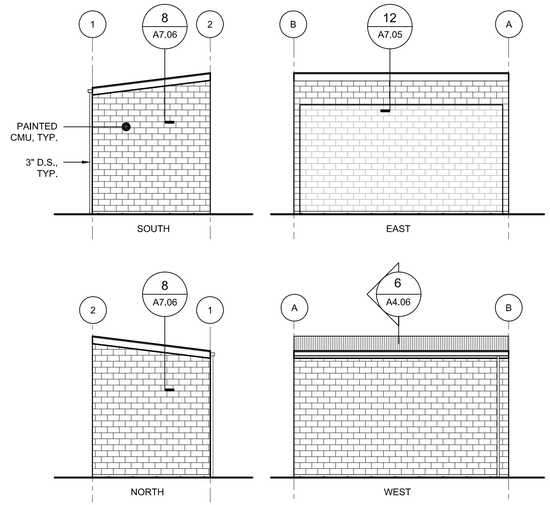

6 TRASH ENCLOSURE EXTERIOR ELEVATIONS

1/8" = 1'-0"

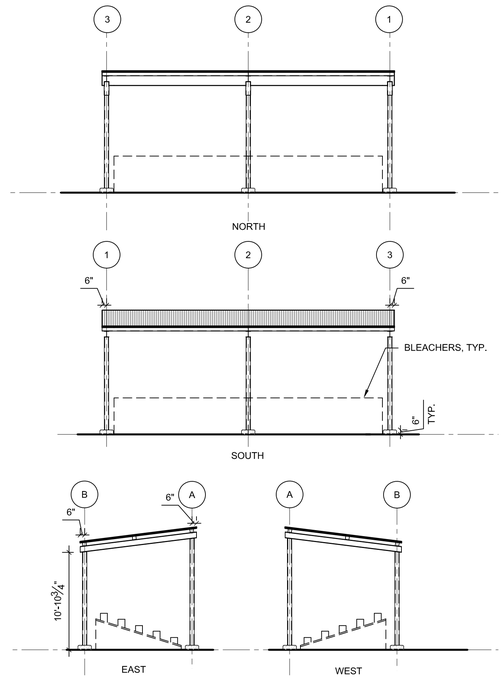

7 COVERED BLEACHER ELEVATIONS

1/8" = 1'-0"

100% CD SET

REV	ISSUED FOR	DATE

SCALE: 1/8"=1'-0" 0 8'

PSE - OPERATIONAL TRAINING CENTER

EXTERIOR ELEVATIONS - OUTDOOR TRAINING

PROJECT No:	202202.06
DRAWN BY:	MR
CHECKED BY:	AK
DATE ISSUED:	01/26/24

A3.02

© 2023

1/26/2024 2:14:59 PM

DOOR TAG



1. ALL DOORS 1-3/4" THICK UNLESS OTHERWISE NOTED.

2. DOOR CONSTRUCTION:

   TYPICAL = SOLID-CORE-WOOD
   HM = HOLLOW-METAL
   AL = ALUMINUM & GLASS
   MFR = PER MANUFACTURER

3. FACE & FINISH:

   MP = METAL-PAINTED
   PL = PLASTIC - LAMINATE
   AL = ALUMINUM
   MFR = PER MANUFACTURER

4. GLASS:

   SI = PROVIDE SEALED INSULATING GLASS UNITS AT ALL EXTERIOR DOORS & SIDELIGHTS, U.N.O.

   SL = PROVIDE SINGLE SAFETY LAMINTED GLAZING AT ALL INTERIOR DOORS & SIDELIGHTS, U.N.O.

   SG = SECURITY GRADE LAMINATED GLAZING

   FL = FIRELITE

5. DOOR TYPES:

   OW = OPERABLE WALL
   CD = COILING DOOR
   SD = SECTIONAL DOOR

6. PROVIDE SWEEPS AND GASKETS ON ALL DOOR EDGES.

7. SEE MECH FOR SIZE AND LOCATION OF GRILLES IN DOORS, TYP.

8. ALL GLAZED SWINGING EXTERIOR ENTRY DOORS TO HAVE AN OVERALL ASSEMBLY U-FACTOR VALUE OF 0.60 OR LESS. ALL GLAZED SWINGING EXTERIOR NON ENTRY DOORS TO HAVE AN OVERALL ASSEMBLY U-FACTOR VALUE OF 0.36 OR LESS. SEE EXTERIOR B AND BB DOOR TYPE NOTES IN WINDOW SCHEDULE, AND COMPLIANCE SUMMARY.

9. ALL OPAQUE EXTERIOR SWINGING DOORS TO HAVE AN OVERALL ASSEMBLY U-FACTOR OF 0.37 OR LESS. SEE WSEC ENVELOPE COMPLIANCE SUMMARY.

10. ALL OPAQUE EXTERIOR SECTIONAL DOORS TO HAVE AN OVERALL ASSEMBLY U-FACTOR OF 0.31 OR LESS. SEE WSEC ENVELOPE COMPLIANCE SUMMARY.

11. INSTALL GASKETING AND WEATHER STRIPPING AT ALL EXTERIOR DOORS.

DOOR SCHEDULE

DOOR	DOOR TYPE	DOOR MATERIAL	DOOR FINISH	DOOR WIDTH	DOOR HEIGHT	DOOR THICKNESS	FRAME TYPE	FRAME MATERIAL	GLAZING	HARDWARE GROUP	RATING	NOTES
100A	BB	AL	AL	6' - 0"	7' - 0"	2"	-	-	SI	1		ENTRY DOOR
100B	BB	AL	AL	6' - 0"	7' - 0"	2"	-	-	SL	2		
101	C	HM	MP	3' - 0"	7' - 0"	1 3/4"	1	HM	SI	4	-	
102	B	AL	AL	3' - 0"	7' - 0"	2"	-	-	SI	3		NON ENTRY DOOR
103	A	TYPICAL	PL	3' - 0"	7' - 0"	1 3/4"	1	HM		14		
104	A	TYPICAL	PL	3' - 0"	7' - 0"	1 3/4"	1	HM		14		
105	A	TYPICAL	PL	3' - 0"	7' - 0"	1 3/4"	1	HM		6		
106A	AA	HM	MP	6' - 0"	7' - 0"	1 3/4"	1	HM		7		
106B	A	TYPICAL	PL	3' - 0"	7' - 0"	1 3/4"	1	HM		8		
107A	A	HM	MP	4' - 0"	7' - 0"	1 3/4"	1	HM		9		
107B	A	TYPICAL	PL	3' - 0"	7' - 0"	1 3/4"	1	HM		6		
108	A	HM	MP	3' - 0"	7' - 0"	1 3/4"	1	HM		9	-	
109	A	TYPICAL	PL	3' - 0"	7' - 0"	1 3/4"	1	HM		14		
111	B	TYPICAL	PL	3' - 0"	7' - 0"	1 3/4"	1	HM	SL	5	-	
112	B	TYPICAL	PL	3' - 0"	7' - 0"	1 3/4"	1	HM	SL	5	-	
113	B	TYPICAL	PL	3' - 0"	7' - 0"	1 3/4"	1	HM	SL	5	-	
114	B	TYPICAL	PL	3' - 0"	7' - 0"	1 3/4"	1	HM	SL	10	-	
115	A	TYPICAL	PL	3' - 0"	7' - 0"	1 3/4"	1	HM		11		
116	A	TYPICAL	PL	3' - 0"	7' - 0"	1 3/4"	1	HM		14		
117A	A	TYPICAL	PL	3' - 0"	7' - 0"	1 3/4"	1	HM		12		
117B	A	TYPICAL	PL	3' - 0"	7' - 0"	1 3/4"	1	HM		12		
118	A	TYPICAL	PL	3' - 0"	7' - 0"	1 3/4"	1	HM		13		
119A	A	TYPICAL	PL	3' - 0"	7' - 0"	1 3/4"	1	HM		12		
119B	A	TYPICAL	PL	3' - 0"	7' - 0"	1 3/4"	1	HM		12		
120	A	TYPICAL	PL	3' - 0"	7' - 0"	1 3/4"	1	HM		13		
121	A	TYPICAL	PL	3' - 0"	7' - 0"	1 3/4"	1	HM		14		
122	A	TYPICAL	PL	3' - 0"	7' - 0"	1 3/4"	1	HM		14		
123A	C	TYPICAL	PL	3' - 0"	7' - 0"	1 3/4"	1	HM	SL	14	-	
123B	CC	TYPICAL	PL	6' - 0"	7' - 0"	1 3/4"	1	HM	SL	15	-	
123C	C	HM	MP	3' - 0"	7' - 0"	1 3/4"	1	HM	SI	9	-	
123D	SD	MFR	MFR	10' - 0"	12' - 0"	1 1/2"	1	HM		24		
124A	CC	TYPICAL	PL	6' - 0"	7' - 0"	1 3/4"	1	HM	SL	15	-	
124B	C	HM	MP	3' - 0"	7' - 0"	1 3/4"	2	HM	SI	9	-	
124C	SD	MFR	MFR	10' - 0"	12' - 0"	1 1/2"	1	HM		24		
125A	C	TYPICAL	PL	3' - 0"	7' - 0"	1 3/4"	1	HM	SL	14	-	
125B	CC	TYPICAL	PL	6' - 0"	7' - 0"	1 3/4"	1	HM	SL	15	-	
125C	C	HM	MP	3' - 0"	7' - 0"	1 3/4"	1	HM	SI	9	-	
125D	SD	MFR	MFR	10' - 0"	12' - 0"	1 1/2"	1	HM		24		
126B	CC	TYPICAL	PL	6' - 0"	7' - 0"	1 3/4"	1	HM	SL	15	-	
126C	C	HM	MP	3' - 0"	7' - 0"	1 3/4"	1	HM	SI	9	-	
126D	SD	MFR	MFR	10' - 0"	12' - 0"	1 1/2"	1	HM		24		
127	A	TYPICAL	PL	3' - 0"	7' - 0"	1 3/4"	1	HM		6		
128A	C	HM	MP	3' - 0"	7' - 0"	1 3/4"	1	HM	SI	4	-	
128B	C	TYPICAL	PL	3' - 0"	7' - 0"	1 3/4"	1	HM	SL	16	-	
129A	CC	TYPICAL	PL	6' - 0"	7' - 0"	1 3/4"	1	HM	SL	21	-	
129B	C	HM	MP	3' - 0"	7' - 0"	1 3/4"	1	HM	SI	4	-	
129C	SD	MFR	MFR	12' - 0"	12' - 0"	1 1/2"	1	HM		24		
130	CC	TYPICAL	PL	6' - 0"	7' - 0"	1 3/4"	1	HM	SL	17	-	
131	A	HM	MP	3' - 0"	7' - 0"	1 3/4"	1	HM		18	-	
132	A	HM	MP	3' - 0"	7' - 0"	1 3/4"	1	HM		18	-	
133A	C	HM	MP	3' - 0"	7' - 0"	1 3/4"	1	HM	SI	4	-	
133B	C	TYPICAL	PL	3' - 0"	7' - 0"	1 3/4"	1	HM	SL	16	-	
135	A	HM	MP	3' - 0"	7' - 0"	1 3/4"	1	HM		19	-	
136	A	TYPICAL	PL	3' - 0"	7' - 0"	1 3/4"	1	HM		14		
137A	C	TYPICAL	PL	3' - 0"	7' - 0"	1 3/4"	1	HM	SL	8	-	
137B	C	HM	MP	3' - 0"	7' - 0"	1 3/4"	1	HM	SI	4	-	
137C	SD	MFR	MFR	12' - 0"	15' - 0"	1 1/2"	1	HM		24		
139	A	TYPICAL	PL	3' - 0"	7' - 0"	1 3/4"	1	HM		6		
140A	CC	TYPICAL	PL	6' - 0"	7' - 0"	1 3/4"	1	HM	SL	22	-	
140B	O.W.	-	-	36' - 4"	11' - 4"	3"	-	-		25		MANUAL
141	AA	TYPICAL	PL	6' - 0"	7' - 0"	1 3/4"	1	HM		20		
142A	C	TYPICAL	PL	3' - 0"	7' - 0"	1 3/4"	1	HM	SL	23	-	
142B	O.W.	-	-	39' - 4"	11' - 4"	3"	-	-		25		MANUAL
143	C	TYPICAL	PL	3' - 0"	7' - 0"	1 3/4"	1	HM	SL	23	-	

Door hardware groups are provided in the specifications (project manual). See 08 71 00 Finish Hardware, page 204 Door Hardware Schedule.

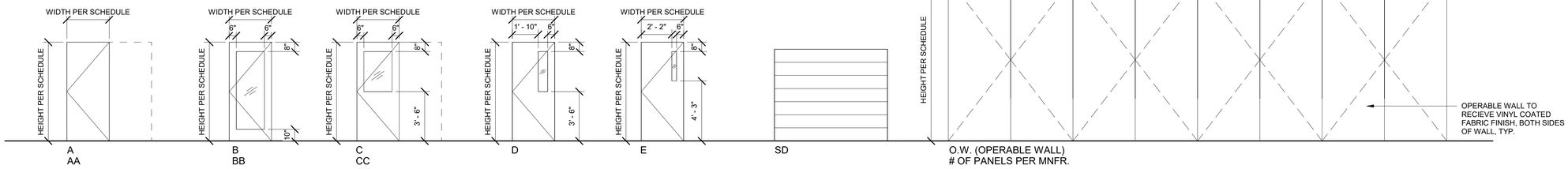

DOOR TYPES

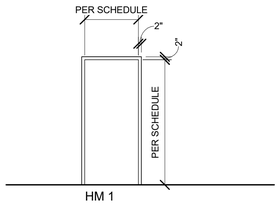

HOLLOW METAL FRAME TYPES

ZERVAS
209 PROSPECT STREET - BELLINGHAM, WA 98225
p.360.734.4744 - zervasgroup.com

9587 REGISTERED ARCHITECT
ANDREW J. KRZYSIEK
STATE OF WASHINGTON

PRCNC20240216

City of Puyallup
Development & Permitting Services
ISSUED PERMIT
Building | Planning | Engineering | Public Works | Fire | Traffic

100% CD SET

REV	ISSUED FOR	DATE

NORTH. PLAN.
SCALE. 1/4" = 1'-0"

PSE OPERATIONAL TRAINING CENTER

DOOR SCHEDULE - OTC BUILDING

PROJECT#. 202202.06
DRAWN. MR CHECK. AK
ISSUED. 01/26/24

A3.03

202202.06
Autodesk Docs://7222 - 5111 - PSE North Bend Precon Design/PSE-OTC_Current.rvt

PRCNC20240216

ZERVAS
209 PROSPECT STREET - BELLINGHAM, WA 98225
p.360.734.4744 - zervasgroup.com

9587 REGISTERED ARCHITECT
ANDREW J. KRZYSIEK
STATE OF WASHINGTON

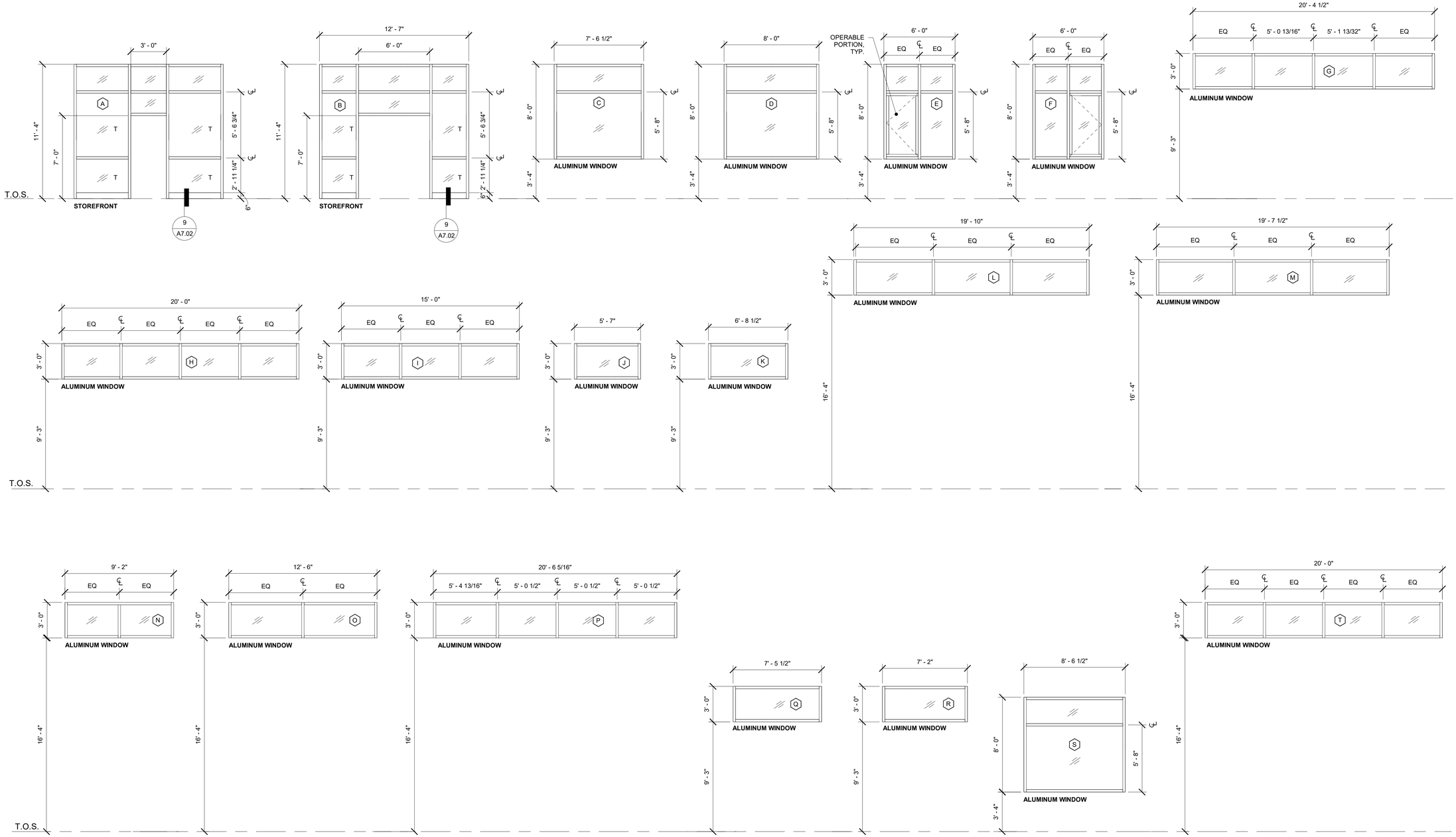

GENERAL NOTES :

1. PROVIDE SAFETY GLAZING WHERE INDICATED AND AS REQUIRED BY SECTION 2406.4 OF THE IBC. "T" = TEMPERED
2. ALL FIXED STOREFRONT WINDOW ASSEMBLIES TO CONFORM TO AN OVERALL U-FACTOR VALUE OF 0.34 OR LESS, AND AN SHGC OF 0.38 OR LESS. SEE WSEC ENVELOPE COMPLIANCE REPORT.
3. ALL FIXED ALUMINUM WINDOW ASSEMBLIES TO CONFORM TO AN OVERALL U-FACTOR VALUE OF 0.28 OR LESS. NORTH FACING WINDOWS TO HAVE AN SHGC OF 0.51 OR LESS, ALL OTHERS TO HAVE AN SHGC OF 0.38 OR LESS. SEE WSEC ENVELOPE COMPLIANCE REPORT.
4. ALL INTERIOR GLAZING TYPE 2, ALL EXTERIOR GLAZING TYPE 1, U.N.O.
5. FENESTRATION PRODUCTS SHALL BE LABELED WITH NFRC U-FACTOR, SHGC, VT AND LEAKAGE RATING, OR IF PRODUCTS DO NOT HAVE AN NFRC RATING, INDICATE APPLICABLE DEFAULT VALUES PER 2018 WSEC CHAPTER 3.
6. U-FACTORS, SHGC AND VT FOR FENESTRATION ASSEMBLIES ARE NFRC. SEE WSEC ENVELOPE COMPLIANCE REPORT.

WINDOW SCHEDULE
1/4" = 1'-0"

City of Puyallup
Development & Permitting Services
ISSUED PERMIT
Building | Planning | Engineering | Public Works | Fire | Traffic

100% CD SET

REV	ISSUED FOR	DATE

NORTH. PLAN.

SCALE.
1/4" = 1'-0"

PSE
OPERATIONAL
TRAINING
CENTER

WINDOW
SCHEDULE

PROJECT#.			202202.06
DRAWN.	MR	CHECK.	AK
ISSUED.			01/26/24

A3.04

PRCNC20240216

ZERVAS
209 PROSPECT STREET - BELLINGHAM, WA 98225
p.360.734.4744 - zervasgroup.com

9587 REGISTERED ARCHITECT
ANDREW J. KRZYSIEK
STATE OF WASHINGTON

City of Puyallup
Development & Permitting Services
ISSUED PERMIT
Building | Planning | Engineering | Public Works | Fire | Traffic

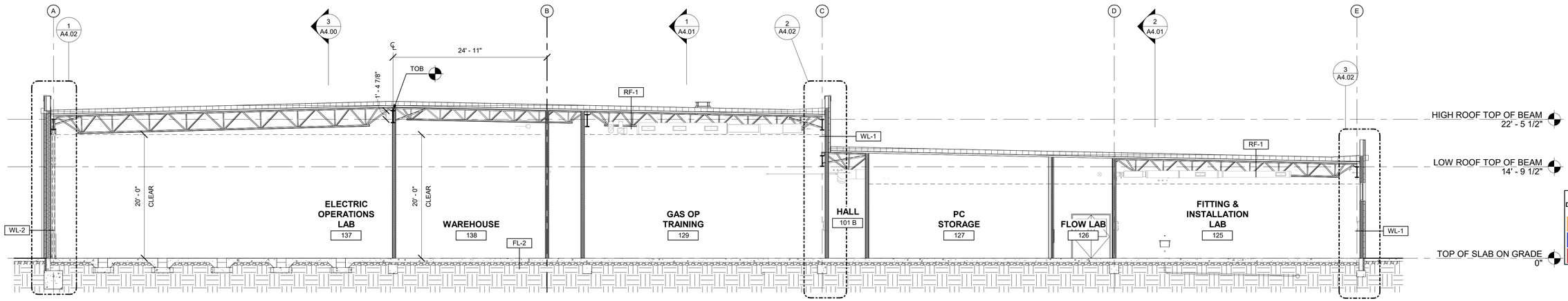

1 BUILDING SECTION
1/8" = 1'-0"

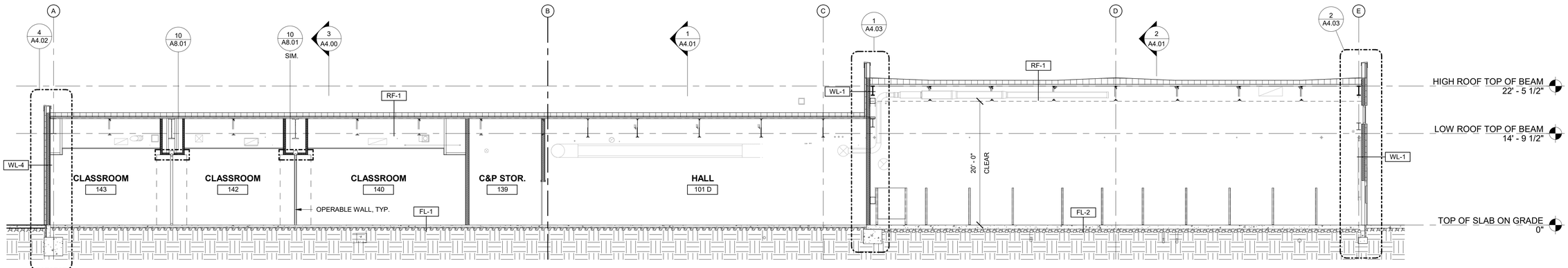

2 BUILDING SECTION
1/8" = 1'-0"

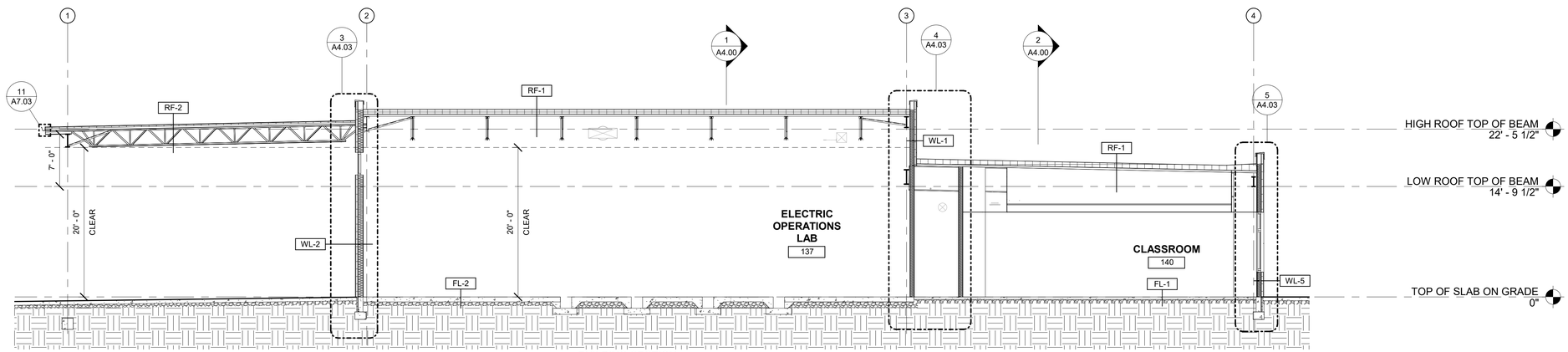

3 BUILDING SECTION
1/8" = 1'-0"

100% CD SET

REV	ISSUED FOR	DATE

NORTH. PLAN.

SCALE. 1/8" = 1'-0"

PSE OPERATIONAL TRAINING CENTER

BUILDING SECTIONS

PROJECT#.	202202.06
DRAWN. MR	CHECK. AK
ISSUED.	01/26/24

A4.00

PRCNC20240216

ZERVAS
209 PROSPECT STREET - BELLINGHAM, WA 98225
p.360.734.4744 - zervasgroup.com

9587 REGISTERED ARCHITECT
ANDREW J. KRZYSIEK
STATE OF WASHINGTON

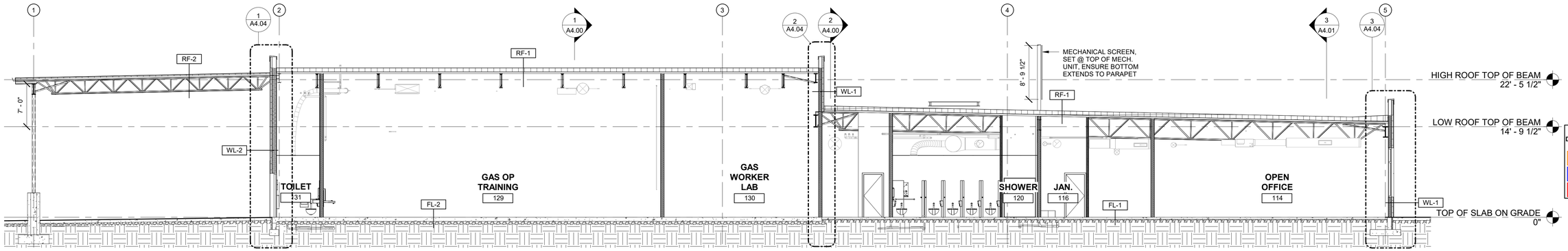

1 BUILDING SECTION
1/8" = 1'-0"

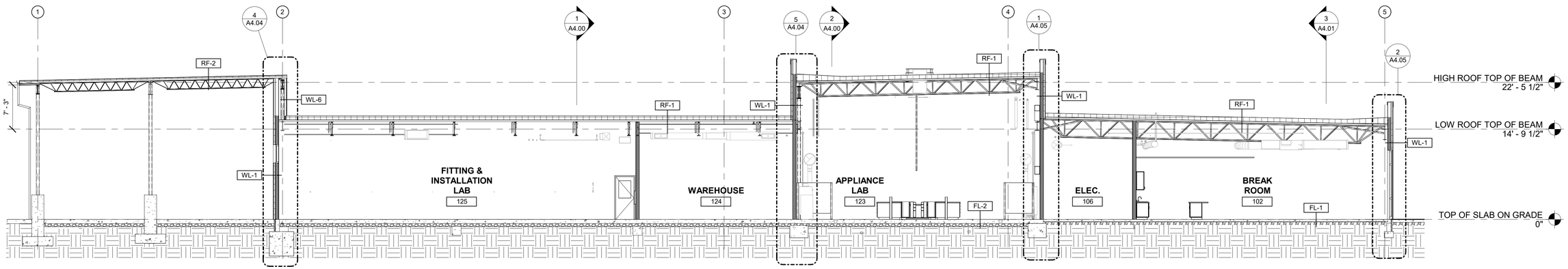

2 BUILDING SECTION
1/8" = 1'-0"

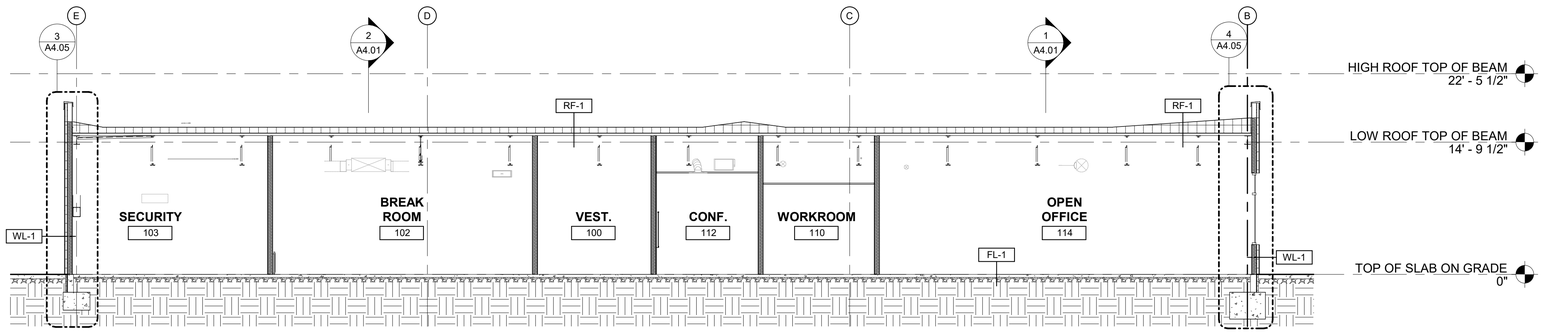

3 BUILDING SECTION
1/8" = 1'-0"

City of Puyallup
Development & Permitting Services
ISSUED PERMIT
Building | Planning | Engineering | Public Works | Fire | Traffic

100% CD SET

REV	ISSUED FOR	DATE

NORTH. PLAN.

SCALE.
1/8" = 1'-0"

PSE OPERATIONAL TRAINING CENTER

BUILDING SECTIONS

PROJECT#. 202202.06
DRAWN. MR CHECK. AK
ISSUED. 01/26/24

A4.01

ZERVAS
209 PROSPECT STREET - BELLINGHAM, WA 98225
p.360.734.4744 - zervasgroup.com

9587 REGISTERED ARCHITECT
ANDREW J. KRZYSIEK
STATE OF WASHINGTON

PRCNC20240216

City of Puyallup
Development & Permitting Services
ISSUED PERMIT
Building | Planning
Engineering | Public Works
Fire | Traffic

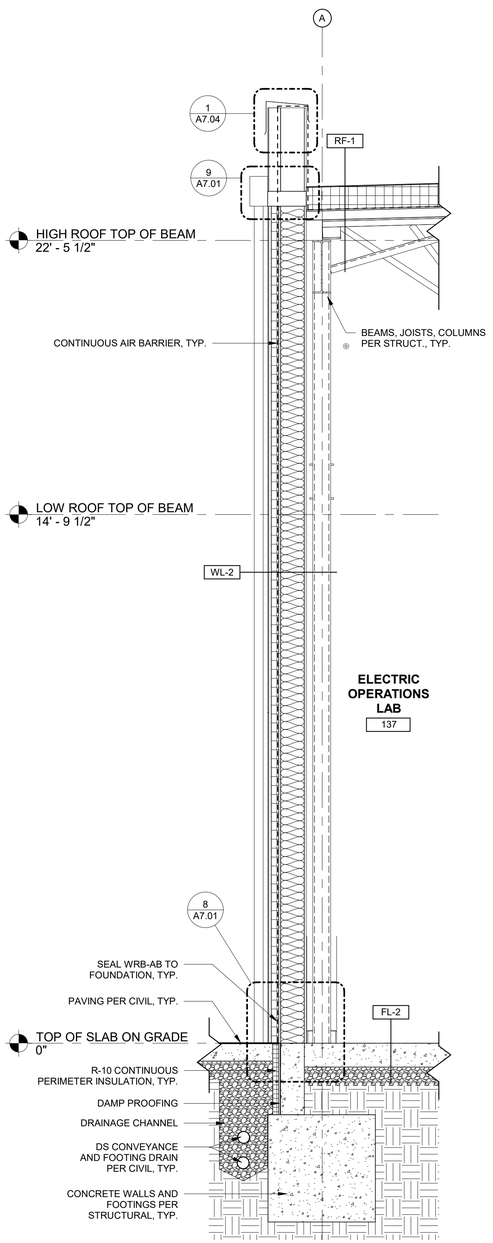

1 WALL SECTION
1/2" = 1'-0"

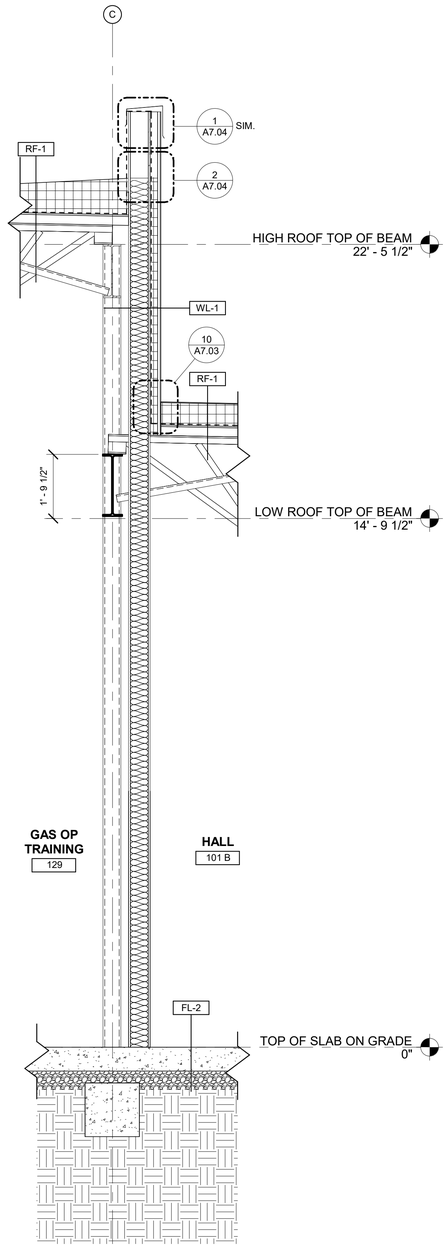

2 WALL SECTION
1/2" = 1'-0"

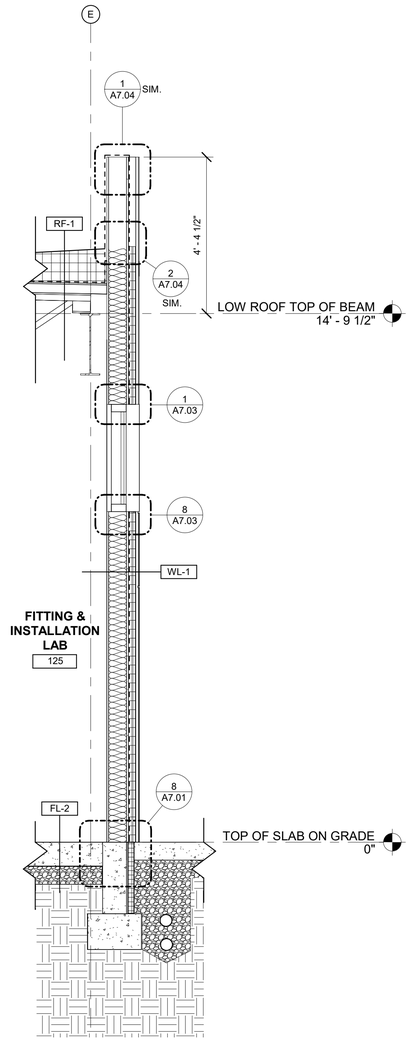

3 WALL SECTION
1/2" = 1'-0"

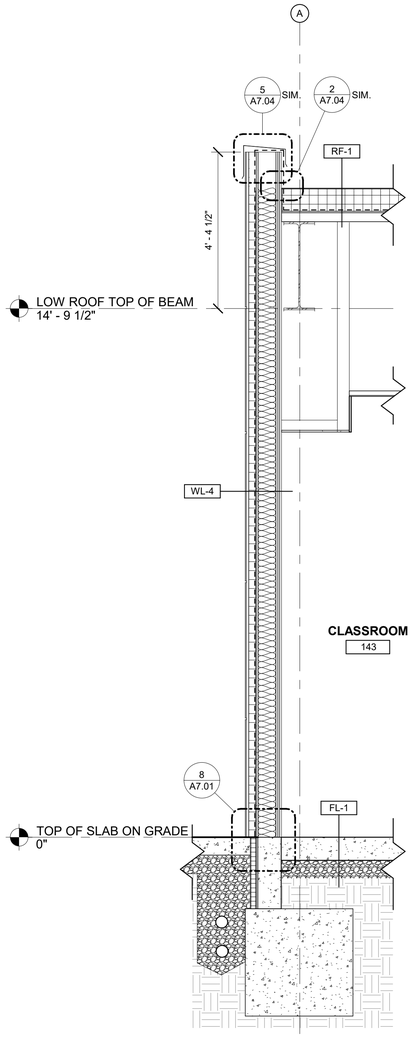

4 WALL SECTION
1/2" = 1'-0"

100% CD SET

REV	ISSUED FOR	DATE

NORTH. | PLAN.

SCALE.
1/2" = 1'-0"

PSE OPERATIONAL TRAINING CENTER

WALL SECTIONS

PROJECT#.			202202.06
DRAWN.	MR	CHECK.	AK
ISSUED.			01/26/24

A4.02

1/26/2024 2:15:14 PM

PRCNC20240216

ZERVAS
209 PROSPECT STREET - BELLINGHAM, WA 98225
p.360.734.4744 - zervasgroup.com

9587 REGISTERED ARCHITECT
ANDREW J. KRZYSIEK
STATE OF WASHINGTON

City of Puyallup
Development & Permitting Services
ISSUED PERMIT
Building | Planning
Engineering | Public Works
Fire | Traffic

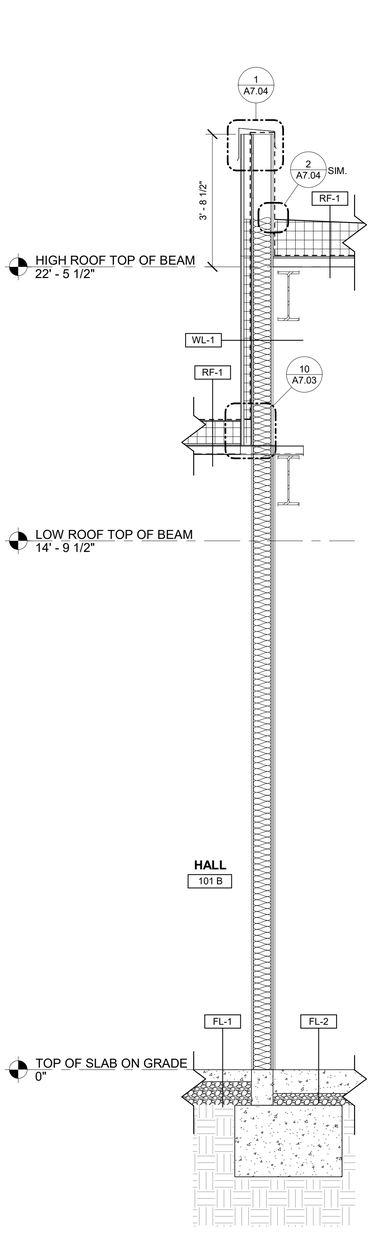

1 WALL SECTION
1/2" = 1'-0"

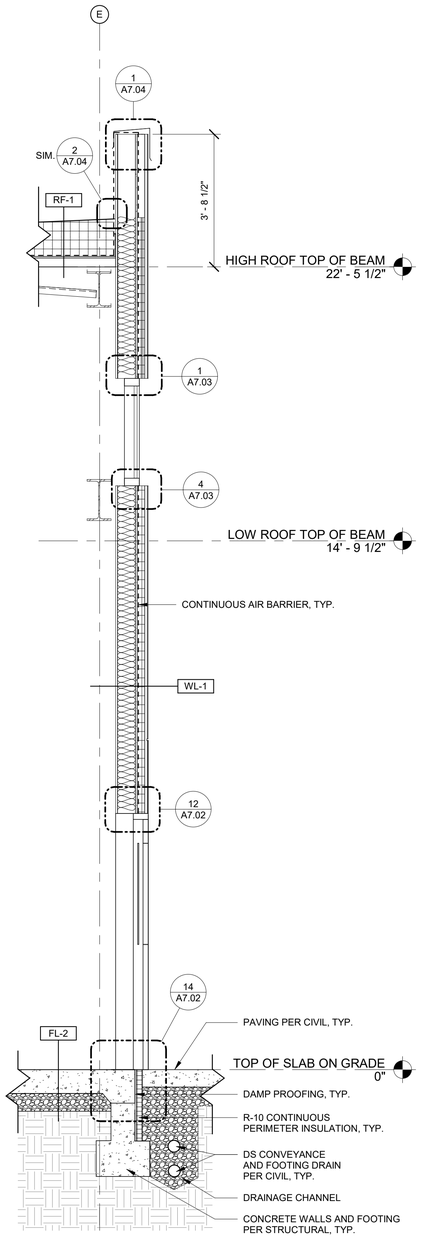

2 WALL SECTION
1/2" = 1'-0"

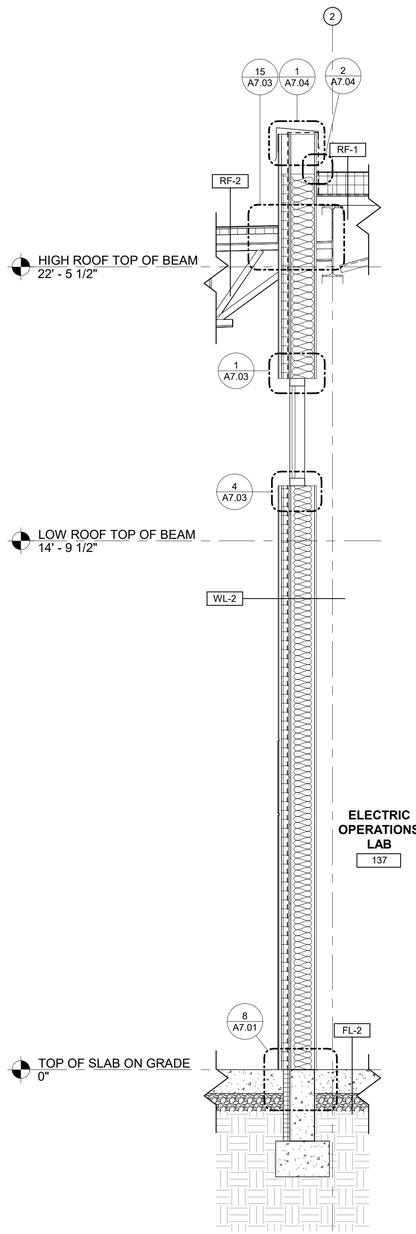

3 WALL SECTION
1/2" = 1'-0"

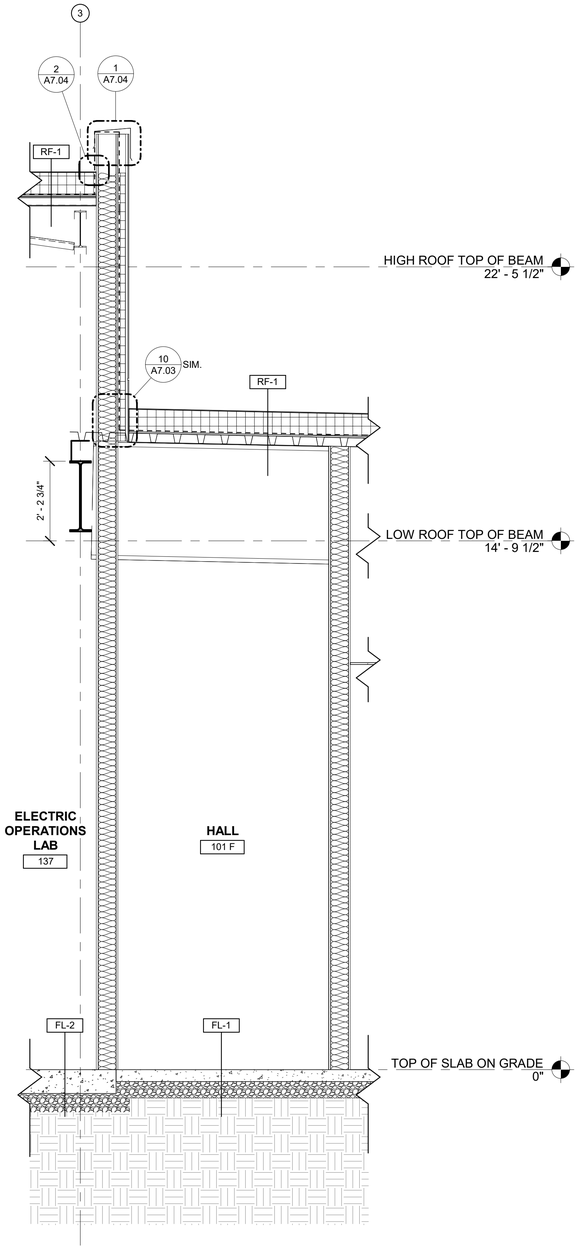

4 WALL SECTION
1/2" = 1'-0"

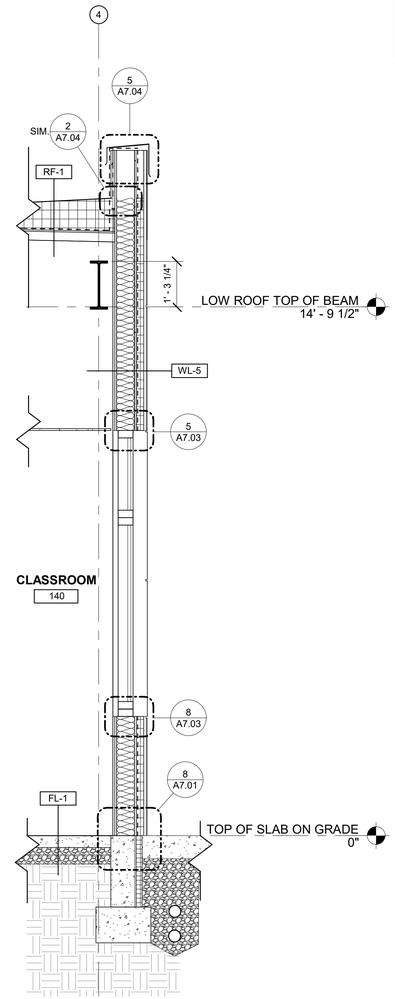

5 WALL SECTION
1/2" = 1'-0"

100% CD SET

REV	ISSUED FOR	DATE

NORTH. PLAN.

SCALE.
1/2" = 1'-0"

PSE OPERATIONAL TRAINING CENTER

WALL SECTIONS

PROJECT#.			202202.06
DRAWN.	MR	CHECK.	AK
ISSUED.			01/26/24

A4.03

202202.06
Autodesk Docs://7222 - 5111 - PSE North Bend Precon Design/PSE-OTC_Current.rvt

1/26/2024 2:15:17 PM

ZERVAS
209 PROSPECT STREET - BELLINGHAM, WA 98225
p.360.734.4744 - zervasgroup.com

9587 REGISTERED ARCHITECT
ANDREW J. KRZYSIEK
STATE OF WASHINGTON

PRCNC20240216

City of Puyallup
Development & Permitting Services
ISSUED PERMIT
Building | Planning | Engineering | Public Works | Fire | Traffic

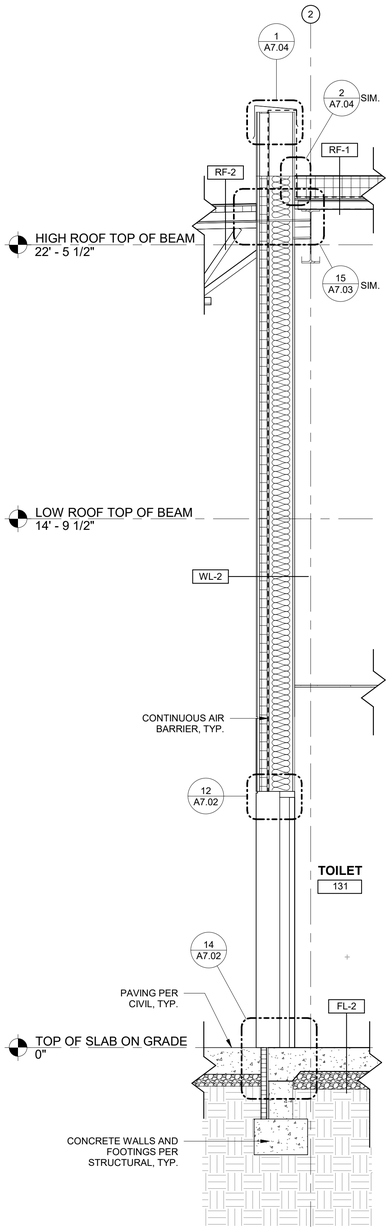

1 WALL SECTION
1/2" = 1'-0"

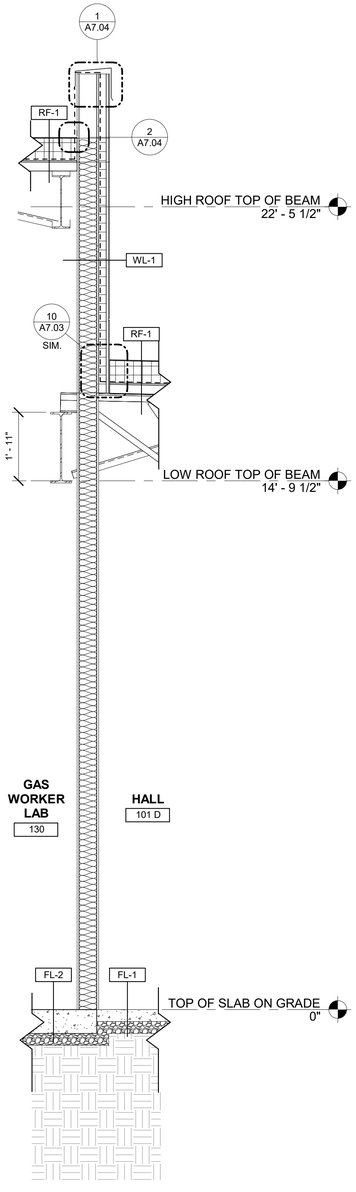

2 WALL SECTION
1/2" = 1'-0"

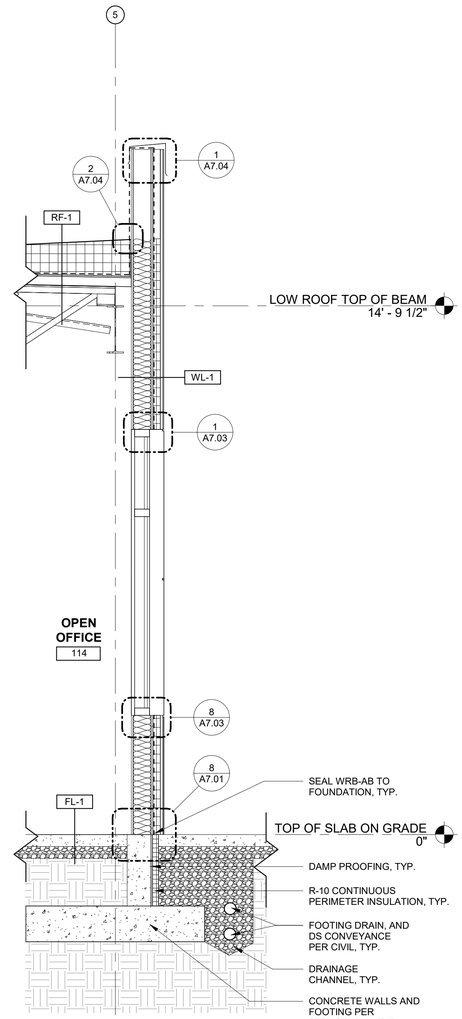

3 WALL SECTION
1/2" = 1'-0"

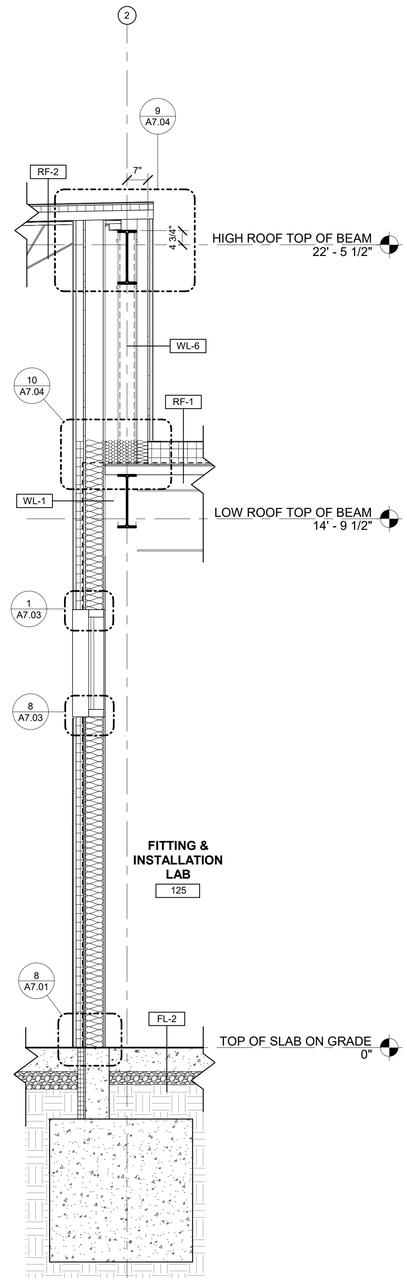

4 WALL SECTION
1/2" = 1'-0"

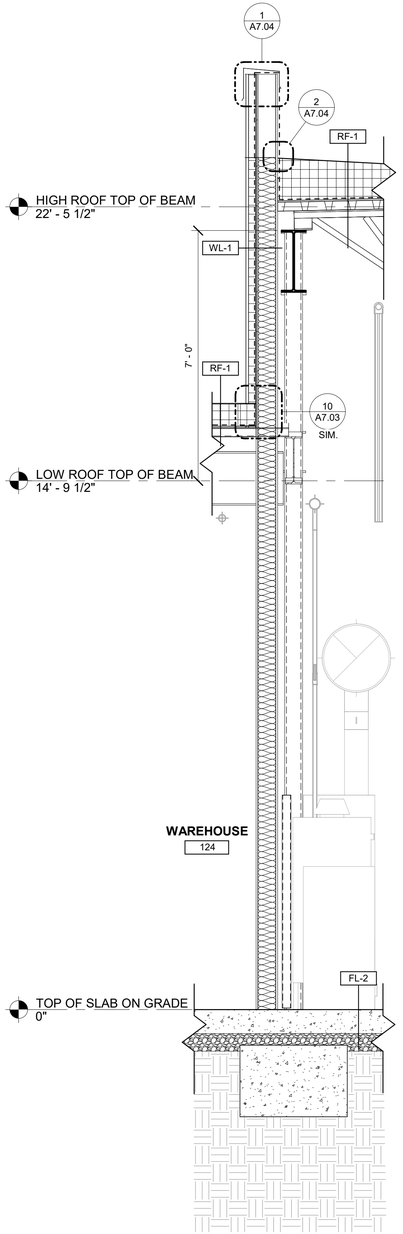

5 WALL SECTION
1/2" = 1'-0"

100% CD SET

REV	ISSUED FOR	DATE

NORTH. | PLAN.

SCALE.
1/2" = 1'-0"

PSE OPERATIONAL TRAINING CENTER

WALL SECTIONS

PROJECT#.			202202.06
DRAWN.	MR	CHECK.	AK
ISSUED.			01/26/24

A4.04

202202.06
Autodesk Docs://7222 - 5111 - PSE North Bend Precon Design/PSE-OTC_Current.rvt

PRCNC20240216

ZERVAS

209 PROSPECT STREET - BELLINGHAM, WA 98225
p.360.734.4744 - zervasgroup.com

9587 REGISTERED ARCHITECT
ANDREW J. KRZYSIEK
STATE OF WASHINGTON

City of Puyallup
Development & Permitting Services
ISSUED PERMIT
Building | Planning
Engineering | Public Works
Fire | Traffic

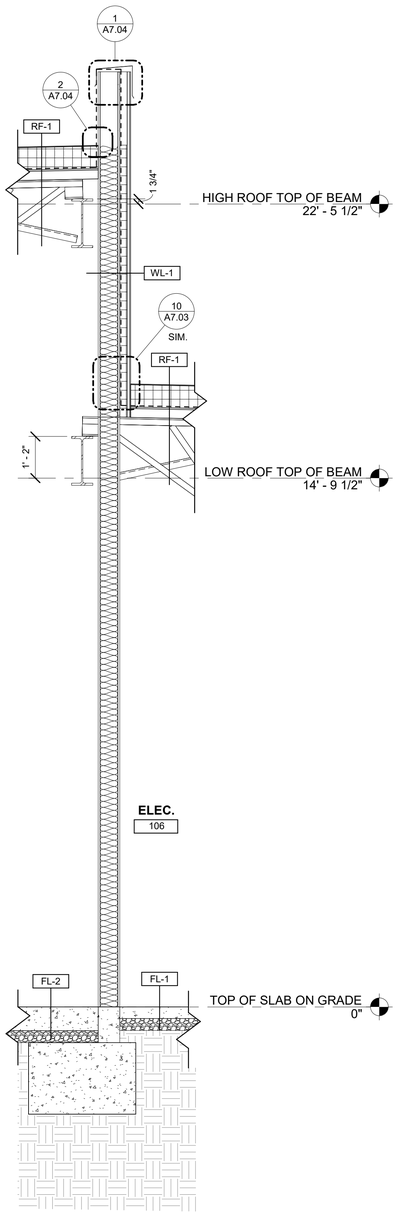

1 WALL SECTION
1/2" = 1'-0"

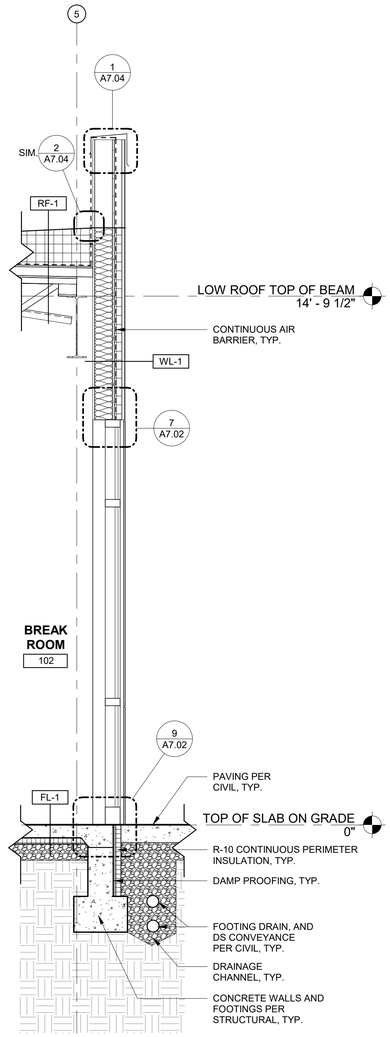

2 WALL SECTION
1/2" = 1'-0"

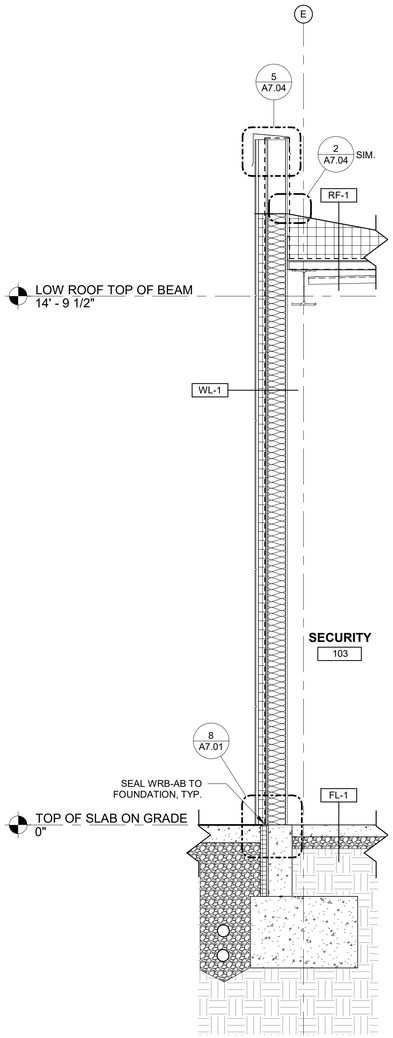

3 WALL SECTION
1/2" = 1'-0"

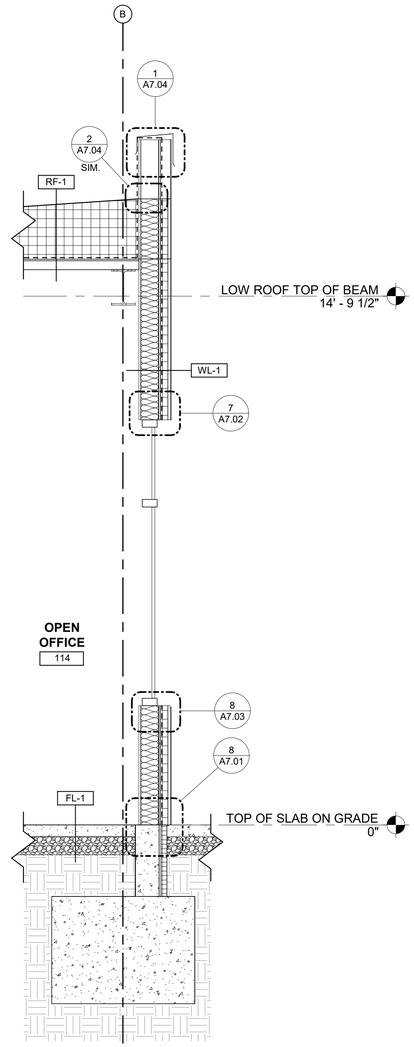

4 WALL SECTION
1/2" = 1'-0"

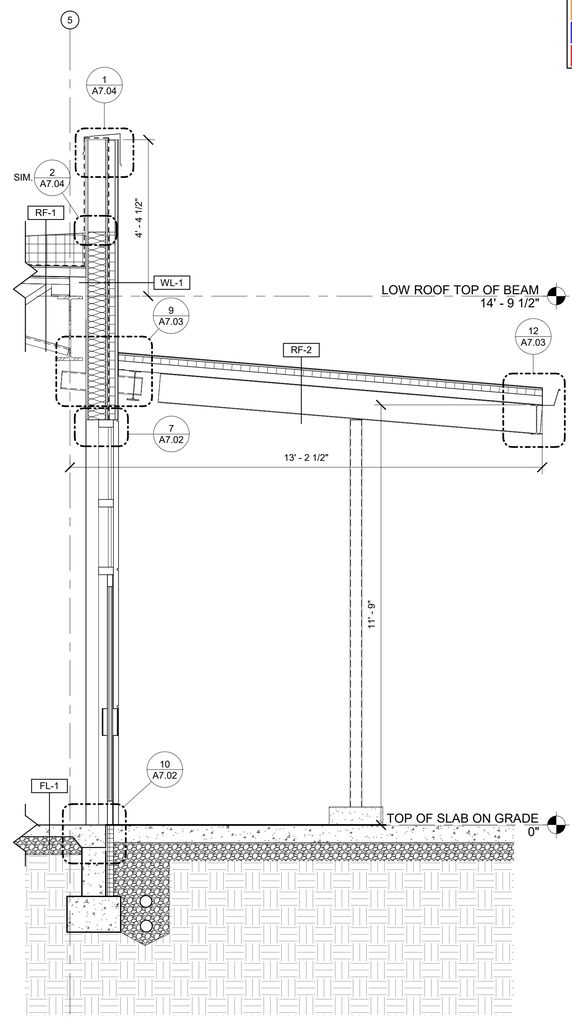

5 WALL SECTION
1/2" = 1'-0"

100% CD SET

REV	ISSUED FOR	DATE

NORTH. PLAN.

SCALE.
1/2" = 1'-0"

PSE OPERATIONAL TRAINING CENTER

WALL SECTIONS

PROJECT#.			202202.06
DRAWN.	MR	CHECK.	AK
ISSUED.			01/26/24

A4.05

PRCNC20240216

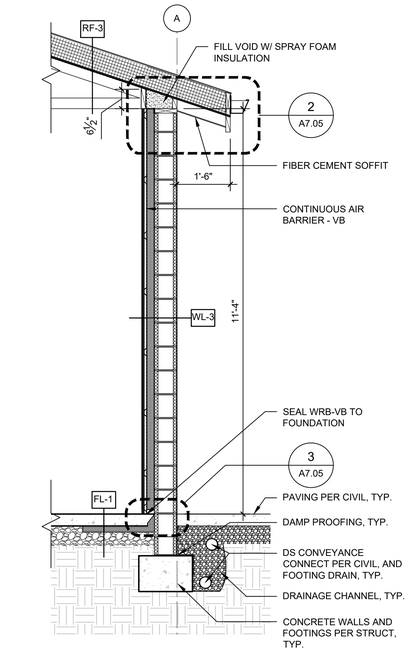

1 CONTROL HOUSE WALL SECTION
1/2" = 1'-0"

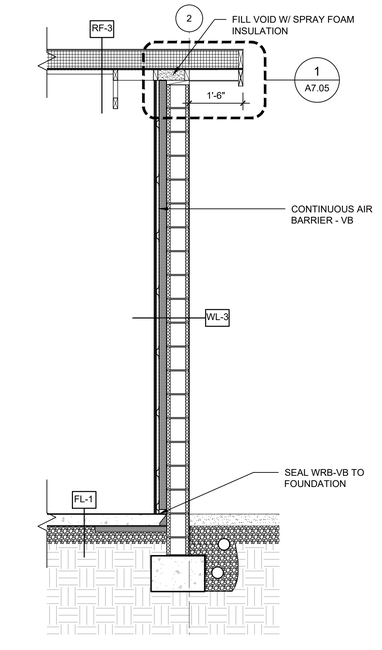

2 CONTROL HOUSE WALL SECTION
1/2" = 1'-0"

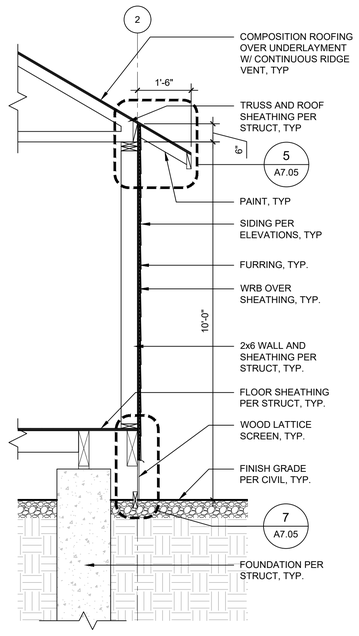

3 "VILLAGE" UNIT WALL SECTION, TYP.
1/2" = 1'-0"

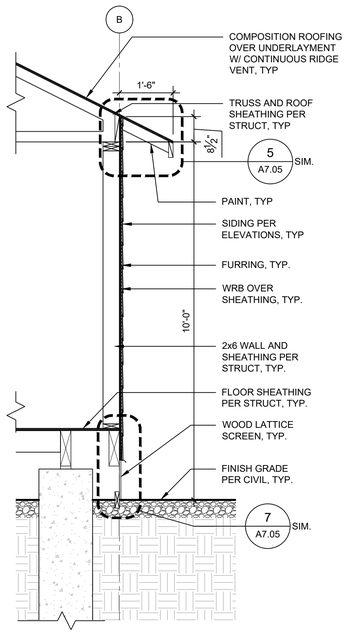

4 4-PLEX BUILDING UNIT WALL SECTION
1/2" = 1'-0"

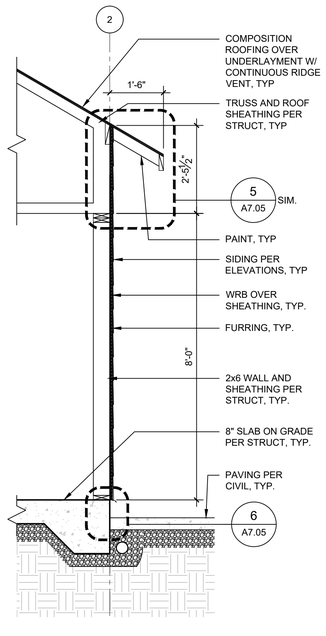

5 COMPRESSOR BUILDING WALL SECTION
1/2" = 1'-0"

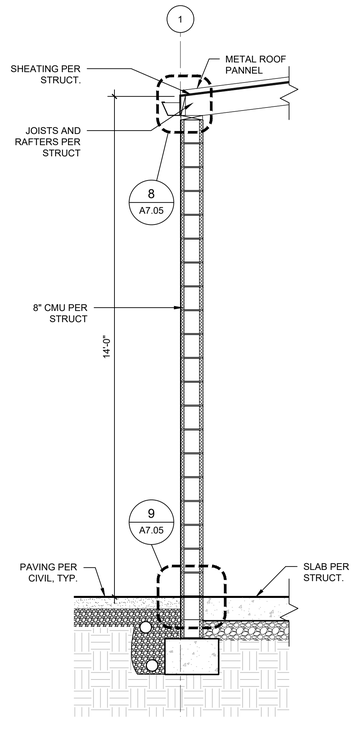

6 TRASH ENCLOSURE WALL SECTION
1/2" = 1'-0"

ZERVAS
ARCHITECTURE | INTERIOR DESIGN
zervasgroup.com
209 Prospect Street
Bellingham, WA 98225
360.734.4744

9587 REGISTERED ARCHITECT
ANDREW J. KRZYSIEK
STATE OF WASHINGTON

City of Puyallup
Development & Permitting Services
ISSUED PERMIT
Building | Planning
Engineering | Public Works
Fire | Traffic

100% CD SET

REV	ISSUED FOR	DATE

SCALE: AS NOTED

PSE - OPERATIONAL TRAINING CENTER

WALL SECTIONS OUTDOOR TRAINING

PROJECT No:	202202.06
DRAWN BY:	MR
CHECKED BY:	AK
DATE ISSUED:	01/26/24

A4.06

© 2023

1/26/2024 3:28:43 PM

PRCNC20240216

ZERVAS
209 PROSPECT STREET - BELLINGHAM, WA 98225
p.360.734.4744 - zervasgroup.com

9587 REGISTERED ARCHITECT
ANDREW J. KRZYSIEK
STATE OF WASHINGTON

City of Puyallup
Development & Permitting Services
ISSUED PERMIT
Building | Planning
Engineering | Public Works
Fire | Traffic

ADA/ANSI 117.1 MOUNTING HEIGHTS & FIXTURE REQUIREMENTS

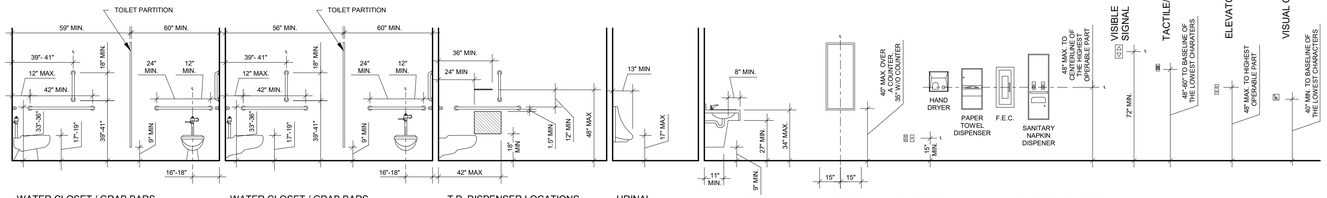

WATER CLOSET / GRAB BARS (FLOOR MOUNTED) | WATER CLOSET / GRAB BARS (WALL HUNG) | T.P. DISPENSER LOCATIONS (PROTRUDING) | URINAL (WALL HUNG) | LAVATORY | MIRROR | OUTLETS | WALL MOUNTED OBJECTS

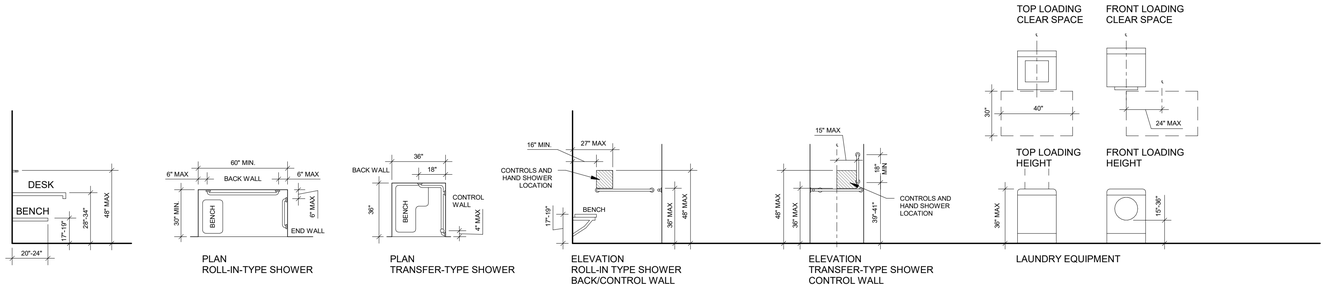

PLAN ROLL-IN-TYPE SHOWER | PLAN TRANSFER-TYPE SHOWER | ELEVATION ROLL-IN TYPE SHOWER BACK/CONTROL WALL | ELEVATION TRANSFER-TYPE SHOWER CONTROL WALL | LAUNDRY EQUIPMENT

NOTES:

1. FIXTURES ARE GENERIC REPRESENTATIONS AND DO NOT NECESSARILY REPRESENT THE ITEM AS SPECIFIED.
2. ALL DIMENSIONS ARE TYPICAL UNLESS OTHERWISE NOTED ON DRAWINGS.
3. THE HEIGHT ABOVE FINISH FLOOR TO ANY RACK, OPERATING CONTROL, RECEPTACLE OR DISPENSER DEEMED ADA ACCESSIBLE MAY NOT EXCEED 48".
4. EXPOSED HOT WATER AND DRAIN PIPES SHALL BE INSULATED OR OTHERWISE COVERED.
5. THERE WILL BE NO SHARP OR ABRASIVE SURFACES UNDER SINKS.
6. DISPENSERS AND RECEPTACLES SHALL BE INSTALLED WITHIN EASY REACH OF THE WC AND SHALL NOT INTERFERE WITH GRAB BAR UTILIZATION.
7. GC TO INSTALL IN-WALL BACKING FOR ALL WALL MOUNTED ACCESSORIES.
8. A HAND SHOWER W/ A HOSE 59" MIN IN LENGTH, THAT CAN BE USED BOTH AS A FIXED SHOWER HEAD AND AS A HAND SHOWER, SHALL BE PROVIDED.
   - THE CONTROL SHALL HAVE A NONPOSITIVE SHUT-OFF FEATURE. WHERE PROVIDED, AN ADJUSTABLE HEIGHT HAND SHOWER MOUNTED ON A VERTICAL BAR SHALL BE INSTALLED SO AS TO NOT OBSTRUCT THE USE OF GRAB BARS.
9. THRESHOLDS AT ROLL-IN-TYPE SHOWER COMPARTMENTS SHALL NOT EXCEED 1/2".

100% CD SET

REV	ISSUED FOR	DATE

NORTH. | PLAN.

SCALE.
1/4" = 1'-0"

PSE OPERATIONAL TRAINING CENTER

INTERIOR FINISH DATA

PROJECT#. 202202.06
DRAWN. SD | CHECK. AK
ISSUED. 01/26/24

A5.00

1/26/2024 3:28:43 PM

FINISH SCHEDULE

MARK	DESCRIPTION	INSTALLATION
CARPET		
C1	MFG: TANDUS CENTIVA	SIZE: 24" X 24"
	STYLE: ASSERTIVE RIB 04838	PATTERN: VERTICAL ASHLAR
	COLOR: BLACKSMITH 26203	
C2	MFG: SHAW CONTRACT	SIZE: 24" X 24"
	STYLE: ARRANGE 5T294	BACKING: STRATAWORX
	COLOR: CHROME BLACK 94500	PATTERN: QUARTER TURN
CONCRETE		
CN1	SEALED CONCRETE	COLOR: CLEAR
CN2	INTEGRAL COLOR SEALED CONCRETE	COLOR: STONE HARBOR MC2501
	MFG: BASF	
VINYL FLOORING		
V1	LINOLEUM TILE FLOORING	STYLE: MCT-621
	MFG: FORBO	COLOR: DOVE GREY
URETHANE CEMENT FLOORING		
U1	MFG: DUR-A-FLEX	COLOR: GREY
	PRODUCT: POLY CRETE HF	
BASE		
B1	RUBBER BASE	LOCATION: THROUGHOUT, U.N.O.
	MFG: ROPPE	SIZE: 4"H X 120' LENGTHS w/ COVED TOE
	STYLE: 700 SERIES	COLOR: 123 CHARCOAL
B2	TILE BASE	SIZE: 6" X 24" (CUT FROM 12" X 24" TILE)
	MFG: DALTILE	COLOR: MODERN MEDIUM GRAY
	STYLE: FABRIC ART LINEAR ML-63	PATTERN: ALIGN WITH WALL TILE (T1)
PLASTIC LAMINATE		
PL1	MFG: FORMICA	COLOR: PECAN WOODLINE 5883-58
		LOWER CASEWORK
PL2	MFG: FORMICA	COLOR: WHITE DROPS 8824.58
		UPPER CASEWORK
PL3	MFG: FORMICA	COLOR: CITADEL WARP 5882-58
		TOILET PARTITIONS
PL4	MFG: WILSONART	COLOR: SATIN STAINLESS 4830K-18
		WINDOW SILLS
COUNTERTOPS		
SS1	MFG: FORMICA	THICKNESS: 1/2"
	COLOR: LUNA CONCRETE 781	EDGE: SQUARE EASED
WALL PROTECTION		
WP1	FIBER REINFORCED PANELS (FRP)	COLOR: WHITE 85
	MFG: CRANE COMPOSITES	TEXTURE: SMOOTH
	STYLE: GLASBORD-FSTM	FIRE RATING: CLASS A
	TRIM: CLEAR ANODIZED ALUMINUM	

MARK	DESCRIPTION	INSTALLATION
WALL PROTECTION		
WP2	STAINLESS STEEL CORNER GUARDS	SIZE: 82"H X 1-1/2" WING X 1/8" RADIUS
	MFG: IN-PRO CORPORATION	FINISH: NO. 4 SATIN FINISH
	STYLE: STANDARD TYPE 430 STAINLESS STEEL	INSTALLATION: ADHESIVE
PAINT		
P1	MFG: SHERWIN-WILLIAMS	WALLS & CEILINGS THROUGHOUT, U.N.O.
	COLOR: FROSTY WHITE SW6196	
P2	NOT USED	ACCENT PAINT
P3	NOT USED	ACCENT PAINT
P4	MFG: SHERWIN-WILLIAMS	ACCENT PAINT
	COLOR: MATCH PANTONE 3248 C (TEAL)	
P5	MFG: SHERWIN-WILLIAMS	ACCENT PAINT
	COLOR: MATCH PANTONE 575 C (GREEN)	
P6	MFG: SHERWIN-WILLIAMS	DOOR FRAMES
	COLOR: IRON ORE SW7069	
P7	MFG: SHERWIN-WILLIAMS	EXTERIOR OTC & OUTDOOR TRAINING UNITS
	COLOR: LOGGIA SW7506	
P8	MFG: SHERWIN-WILLIAMS	EXTERIOR CONTROL HOUSE
	COLOR: ROCK GARDEN SW6195	
P9	MFG: SHERWIN-WILLIAMS	EXTERIOR OTC
	COLOR: MATCH PANTONE 5473C (DARK TEAL)	
TILE		
T1	MFG: DALTILE	SIZE: 12" X 24"
	STYLE: FABRIC ART LINEAR ML-63	PATTERN: VERTICAL OFFSET
	COLOR: MODERN MEDIUM GRAY	
T2	BACKSPLASH	COLOR: 0190 WHITE
	MFG: DALTILE	SIZE: 3" X 6"
	STYLE: COLOR WHEEL	PATTERN: DIAGONAL RUNNING BOND
WOOD		
W1	AC PLYWOOD WAINSCOT	1/8" RADIUS ROUTED AT EDGE W/ EXPOSED FASTENERS
	8'H X 4'L X 5/8" THICK	PAINTED P1
W2	AC PLYWOOD WAINSCOT	PAINTED P1
	4'H X 8'L X 3/4" THICK	
W3	FIRE-RATED PLYWOOD WAINSCOT	PAINTED P1-LEAVE FIRE LABEL ON EACH PANEL EXPOSED
	4'H X 8'L X 3/4" THICK	
CEILINGS		
CL1	GYPSUM WALL BOARD	PAINTED, P1
CL2	ACOUSTIC CEILING TILE	SIZE 24" X 48"
	STYLE: ULTIMA HIGH NRC	GRID: SUPRAFINE
	TYPE: 15/16" BEVELED TEGULAR	COLOR: WHITE
CL3	FIBER CEMENT SOFFIT PANEL	
OTS	OPEN TO STRUCTURE	NOT PAINTED

FINISH PLAN NOTES

1. REFERNCE INTERIOR ELEVATIONS AND REFLECTED CEILING PLAN FOR SOFFIT PAINT COLORS AND CEILING FINISH NOTATIONS.
2. INTERIOR WALLS AND EXPOSED STEEL TO BE PAINTED P1 UNLESS NOTED OTHERWISE.
3. REFERENCE INTERIOR ELEVATIONS FOR ACCENT PAINT LOCATIONS.
4. DOOR FRAMES TO BE PAINTED P6 UNLESS NOTED OTHERWISE.
6. RUBBER BASE TO BE B1 UNLESS NOTED OTHERWISE.
7. ALL EXPOSED CORNERS AND END WALLS ARE TO RECEIVE CORNER GUARDS, WP2.
8. CONTRACTOR TO FOLLOW MANUFACTURER'S INSTRUCTIONS FOR ABUTTING DIFFERENT FLOOR MATERIALS AND THICKNESSES. TRANSISTION TO BE NO MORE THAN 1/4" HEIGHT DIFFERENCE.
9. WHERE DIFFERING FLOOR MATERIALS MEET, SUB-FLOOR TO BE PREPPED SO THAT WHEN MATERIALS MEET AT TRANSITION, THEY ARE FLUSH AND LEVEL. PROVIDE ADA UNDERLAYMENT SLOPE IF REQUIRED. VERIFY LOCATIONS WITH ARCHITECT.
10. TRANSITION CHANGE IN FLOORING AT CENTER OF DOORWAY UNLESS NOTED OTHERWISE. REFERENCE FLOORING TRANSITION LEGEND ON THIS SHEET.
11. VERTICAL GROUT JOINTS TO ALIGN WITH FLOOR TILE GROUT JOINTS.
12. REFERENCE INTERIOR ELEVATIONS FOR LOACATIONS OF FINISHES ON MILLWORK.
13. COORDINATE CASEWORK AND BLOCKING WITH OWNER PROVIDED FURNITURE, EQUIPMENT AND METAL SHELVING.
14. FOR AREAS THAT LIST MORE THAN ONE MATERIAL OR CAN'T BE SHOWN ON PLAN, REFERENCE INTERIOR ELEVATIONS, RCP AND FINISH PLAN FOR EXACT LOCATION AND EXTENT OF FINISHES.
15. CUT TILE MUST BE A REASONABLE SIZE. PLAN LAYOUTS TO ACCOMODATE.
16. CUT TILE SHALL HAVE NO BREAKS OR CHIPS ON FACE AND SHOULD BE REPLACED PRIOR TO GROUTING.

FINISH PLAN LEGEND



XX — CHANGE IN WALL FINISH

CHANGE IN FLOOR FINISH

MATERIAL INSTALLATION DIRECTION

(1) — WALL TO HAVE LEVEL 5 FINISH FOR OWNER TO INSTALL WALL GRAPHICS

TRANSITION LEGEND

TR1 CARPET TO SEALED CONCRETE
ROPPE-#38 GLUE DOWN CAEPET EDGE 1/4"
COLOR: CHARCOAL #123

TR2 VINYL TO SEALED CONCRETE
ROPPE-#21 REDUCER STRIP
COLOR: CHARCOAL #123

TR3 OUTSIDE TILE CORNER
SCHULTER-JOLLY
FIINISH: SATIN ANODIZED

TR4 EXPOSED TOP OF TILE WAINSCOTT
SCHLUTER-JOLLY-P
FINISH: SATIN ANODIZED

TR5 CONCRETE FLOOR TO TILE BASE (B2)
SCHLUTER-DILEX-AHKA
FINISH: SATIN ANODIZED

TR6 URETHANE CEMENT FLOOR TO CONCRETE FLOOR SLOPE TO FINISHED CONCRETE OR PROVIDE ADA COMPLIANT REDUCER TO ENSURE THERE IS NO TRIPPING HAZARD

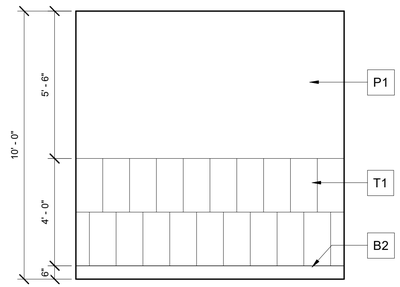

(1) WALL FINISH TYPE 1 (WF1)
3/8" = 1'-0"

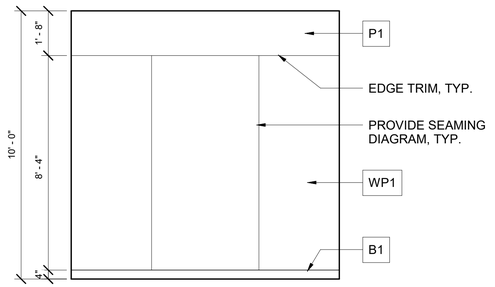

(2) WALL FINISH TYPE 2 (WF2)
3/8" = 1'-0"

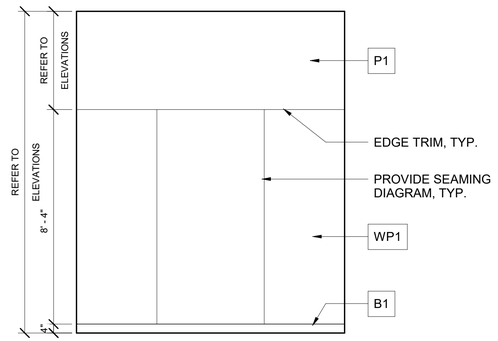

(3) WALL FINISH TYPE 3 (WF3)
3/8" = 1'-0"

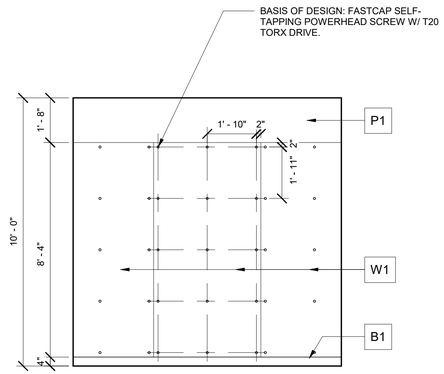

(4) WALL FINISH TYPE 4 (WF4)
3/8" = 1'-0"

PRCNC20240216

ZERVAS
209 PROSPECT STREET - BELLINGHAM, WA 98225
p.360.734.4744 - zervasgroup.com

9587 REGISTERED ARCHITECT
ANDREW J. KRZYSIEK
STATE OF WASHINGTON

City of Puyallup
Development & Permitting Services
ISSUED PERMIT
Building | Planning
Engineering | Public Works
Fire | Traffic

100% CD SET

REV	ISSUED FOR	DATE

NORTH. PLAN.

SCALE.
As indicated

PSE
OPERATIONAL
TRAINING
CENTER

FINISH SCHEDULE

PROJECT#. 202202.06
DRAWN. SD | CHECK. AK
ISSUED. 01/26/24

A5.01

202202.06
Autodesk Docs://7222 - 5111 - PSE North Bend Precon Design/PSE-OTC_Current.rvt

1/26/2024 2:15:24 PM

FINISH PLAN LEGEND

XX XX XX
- BASE
- FLOOR FINISH
- WALL FINISH

XX — CHANGE IN WALL FINISH

CHANGE IN FLOOR FINISH

MATERIAL INSTALLATION DIRECTION

1 — WALL TO HAVE LEVEL 5 FINISH FOR OWNER TO INSTALL WALL GRAPHICS

PRCNC20240216

ZERVAS
209 PROSPECT STREET - BELLINGHAM, WA 98225
p.360.734.4744 - zervasgroup.com

9587 REGISTERED ARCHITECT
ANDREW J. KRZYSIEK
STATE OF WASHINGTON

City of Puyallup
Development & Permitting Services
ISSUED PERMIT
Building | Planning
Engineering | Public Works
Fire | Traffic

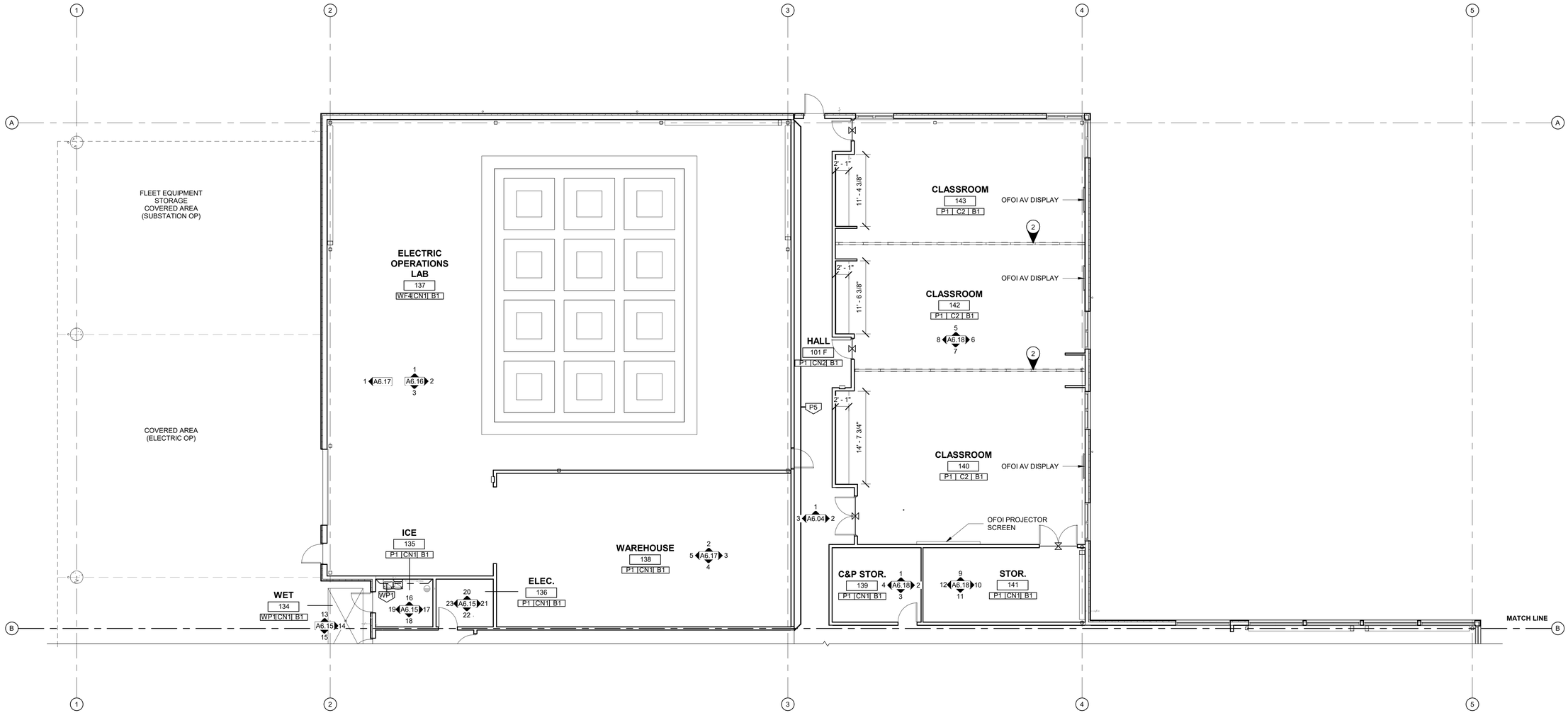

100% CD SET

REV	ISSUED FOR	DATE

NORTH. PLAN.

SCALE.
1/8" = 1'-0"

PSE OPERATIONAL TRAINING CENTER

OTC BUILDING ENLARGED FINISH PLAN

PROJECT#.	202202.06
DRAWN. DL	CHECK. MR
ISSUED.	01/26/24

A5.02

202202.06
Autodesk Docs://7222 - 5111 - PSE North Bend Precon Design/PSE-OTC_Current.rvt

1/26/2024 3:28:44 PM

FINISH PLAN LEGEND

XX | XX | XX
- BASE
- FLOOR FINISH
- WALL FINISH

XX — CHANGE IN WALL FINISH

CHANGE IN FLOOR FINISH

MATERIAL INSTALLATION DIRECTION

1 — WALL TO HAVE LEVEL 5 FINISH FOR OWNER TO INSTALL WALL GRAPHICS

PRCNC20240216

ZERVAS
209 PROSPECT STREET - BELLINGHAM, WA 98225
p.360.734.4744 - zervasgroup.com

9587 REGISTERED ARCHITECT
ANDREW J. KRZYSIEK
STATE OF WASHINGTON

City of Puyallup
Development & Permitting Services
ISSUED PERMIT
Building | Planning | Engineering | Public Works | Fire | Traffic

TOILET 132 WF2 CN1 B2
TOILET 131 WF2 CN1 B2
VEST. 133 P1 C1 B1
GAS OP TRAINING 129 WF4 CN1 B1
GAS WORKER LAB 130 P1 CN1 B1
HALL 101 E P1 CN2 B1
IDF 121 P1 CN1 B1
OFOI AV DISPLAY
COVERED AREA
HALL 101 D P1 CN2 B1
WOMENS 119 WF1 CN2 B2
SHOWER 120 WF1 CN2 B2
JAN. 116 WF3 CN1 B1
HALL 101 A P1 CN2 B1
MENS 117 WF1 CN2 B2
SHOWER 118 WF1 CN2 B2
OPEN OFFICE 114 P1 C2 B1
VEST. 128 P1 C1 B1
HALL 101 B P1 CN2 B1
MECH. 122 P1 CN1 B1
WORKROOM 110 P1 C2 B1
FOCUS 111 P1 C2 B1
OFOI AV DISPLAY
PC COVERED TRAINING AREA
FLOW LAB 126 WF4 CN1 B1
PC STORAGE 127 P1 CN1 B1
HALL 101 C P1 CN2 B1
MOTHER'S ROOM 115 P1 C2 B1
HUDDLE 113 P1 C2 B1
CONF. 112 P1 C2 B1
OFOI AV DISPLAY
OFOI 4' X 8' WHITE BOARD
VEST. 100 P1 C1 B1
FACILITIES 109 P1 C2 B1
HALL 101 P1 CN2 B1
SAFETY STOR. 105 P1 CN1 B1
VENDING AREA
BREAK ROOM 102 P1 CN2 B1
ELEC. 106 P1 CN1 B1
FITTING & INSTALLATION LAB 125 WF4 U1 B1
WAREHOUSE 124 P1 CN1 B1
APPLIANCE LAB 123 WF4 CN1 B1
4' - 7 1/2" TYP FIELD VERIFY PRIOR TO PARTITION INSTALLATION CONFIRM LOCATIONS WITH OWNER
MECH. 107 P1 CN1 B1
COMM ROOM 104 P1 V1 B1
SECURITY 103 P1 V1 B1
FIRE RISER 108 P1 CN1 B1
OFOI 80" MONITOR
PEG BOARD FOR FITTING DISPLAY
PEG BOARD FOR FITTING DISPLAY

100% CD SET

REV	ISSUED FOR	DATE

NORTH. PLAN.

SCALE.
1/8" = 1'-0"

PSE OPERATIONAL TRAINING CENTER

OTC BUILDING ENLARGED FINISH PLAN

PROJECT#.	202202.06
DRAWN. DL	CHECK. MR
ISSUED.	01/26/24

A5.03

202202.06
Autodesk Docs://7222 - 5111 - PSE North Bend Precon Design/PSE-OTC_Current.rvt

1/26/2024 2:15:34 PM

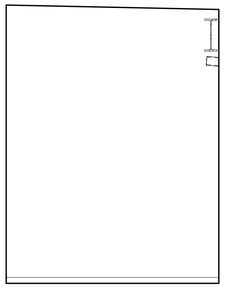

1 100 VESTIBULE - N
1/4" = 1'-0"

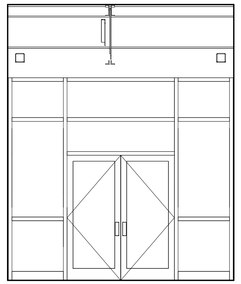

2 100 VESTIBULE - E
1/4" = 1'-0"

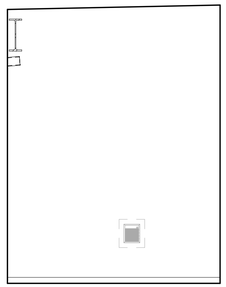

3 100 VESTIBULE - S
1/4" = 1'-0"

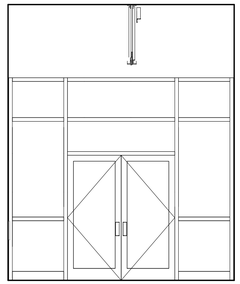

4 100 VESTIBULE - W
1/4" = 1'-0"

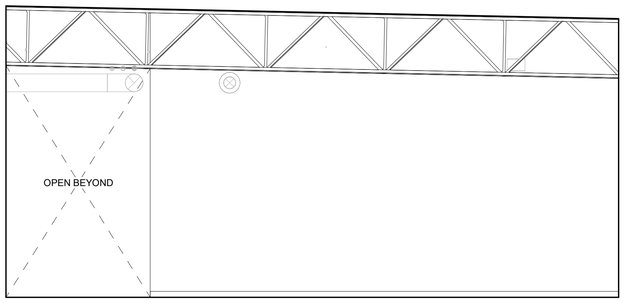

5 101 ENTRY - N
1/4" = 1'-0"

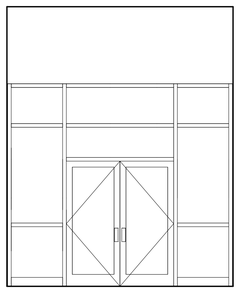

6 101 ENTRY - E
1/4" = 1'-0"

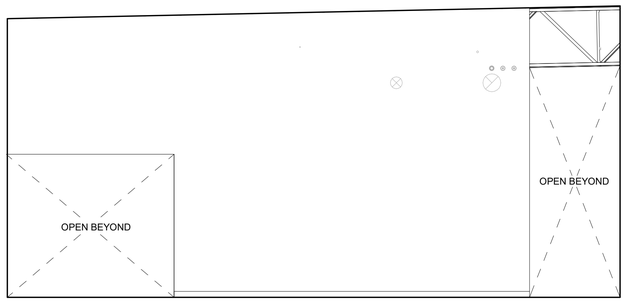

7 101 ENTRY - S
1/4" = 1'-0"

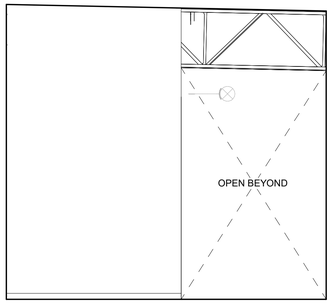

8 101A HALL - N
1/4" = 1'-0"

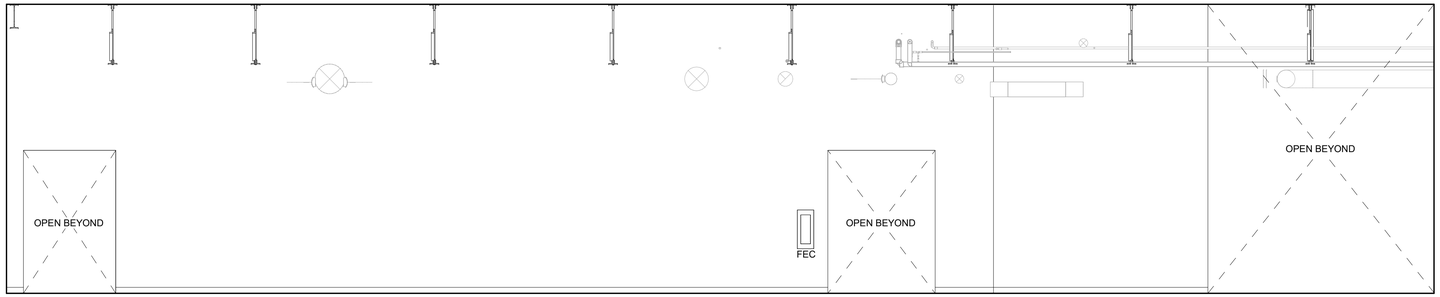

9 101A HALL - E
1/4" = 1'-0"

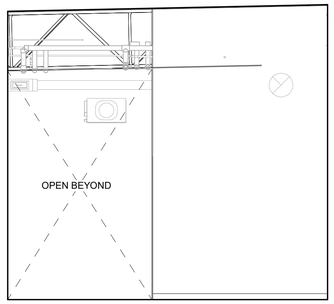

10 101A HALL - S
1/4" = 1'-0"

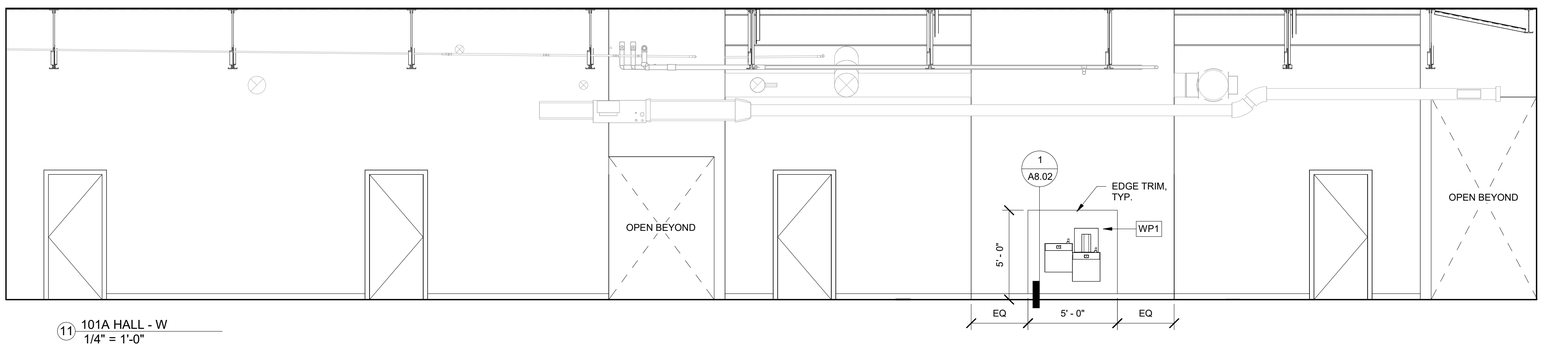

11 101A HALL - W
1/4" = 1'-0"

FINISH NOTES

IF NO FINISH CALLOUT IS PRESENT REFER TO NOTES ON SHEET A5.01 FOR SCHEDULED FINISHES.

PRCNC20240216

ZERVAS
209 PROSPECT STREET - BELLINGHAM, WA 98225
p.360.734.4744 - zervasgroup.com

9587 REGISTERED ARCHITECT
ANDREW J. KRZYSIEK
STATE OF WASHINGTON

City of Puyallup
Development & Permitting Services
ISSUED PERMIT
Building | Planning
Engineering | Public Works
Fire | Traffic

100% CD SET

REV	ISSUED FOR	DATE

NORTH. PLAN.
SCALE.
As indicated

PSE
OPERATIONAL
TRAINING
CENTER

INTERIOR
ELEVATIONS

PROJECT#.			202202.06
DRAWN.	DL	CHECK.	SD
ISSUED.			01/26/24

A6.01

202202.06
Autodesk Docs://7222 - 5111 - PSE North Bend Precon Design/PSE-OTC_Current.rvt

PRCNC20240216

FINISH NOTES

IF NO FINISH CALLOUT IS PRESENT REFER TO NOTES ON SHEET A5.01 FOR SCHEDULED FINISHES.

ZERVAS
209 PROSPECT STREET - BELLINGHAM, WA 98225
p.360.734.4744 - zervasgroup.com

9587 REGISTERED ARCHITECT
ANDREW J. KRZYSIEK
STATE OF WASHINGTON

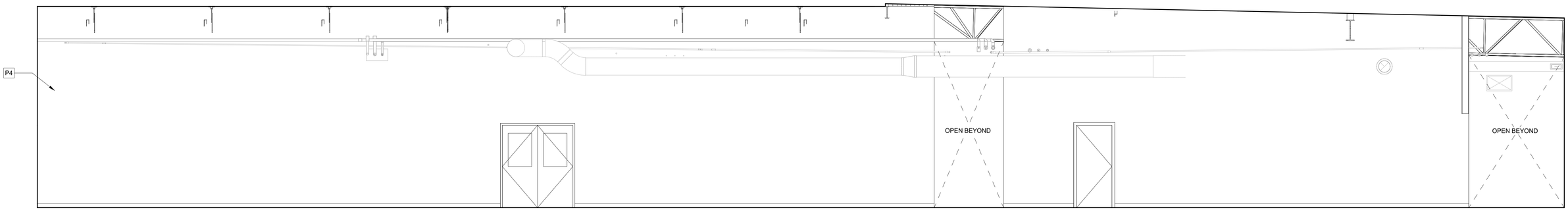

1 101B HALL - N
1/4" = 1'-0"

City of Puyallup
Development & Permitting Services
ISSUED PERMIT
Building | Planning
Engineering | Public Works
Fire | Traffic

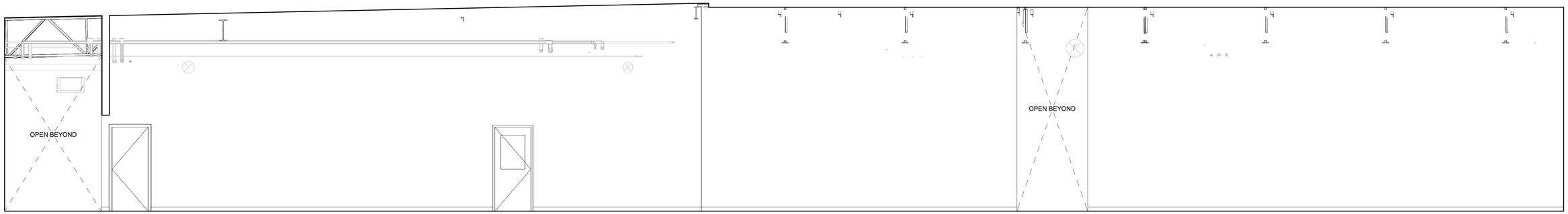

2 101B HALL - S
1/4" = 1'-0"

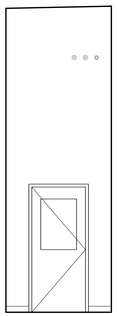

3 101B HALL - W
1/4" = 1'-0"

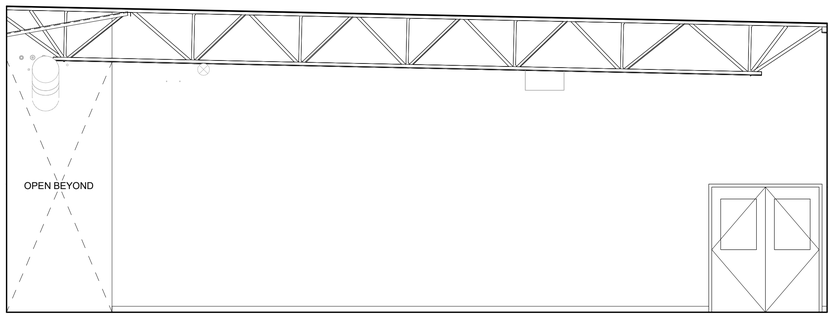

4 101C HALL - E
1/4" = 1'-0"

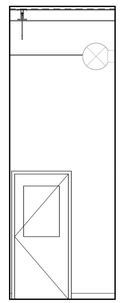

5 101C HALL - S
1/4" = 1'-0"



6 101C HALL - W
1/4" = 1'-0"

100% CD SET

REV	ISSUED FOR	DATE

NORTH. PLAN.

SCALE.
As indicated

PSE OPERATIONAL TRAINING CENTER

INTERIOR ELEVATIONS

PROJECT#.			202202.06
DRAWN.	DL	CHECK.	SD
ISSUED.			01/26/24

A6.02

1/26/2024 2:15:41 PM

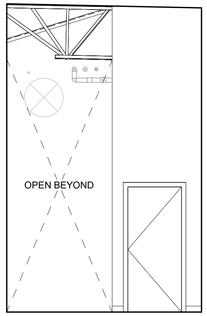

1 101D HALL - N
1/4" = 1'-0"

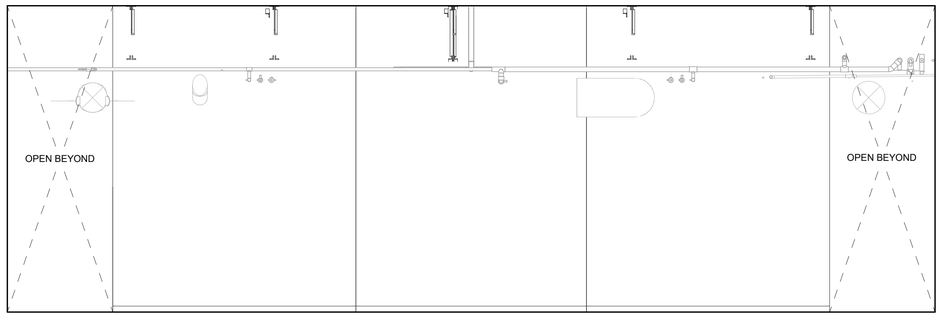

2 101D HALL - E
1/4" = 1'-0"

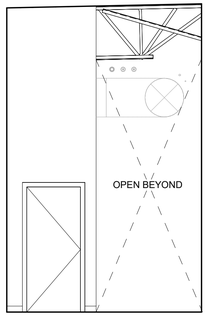

3 101D HALL - S
1/4" = 1'-0"

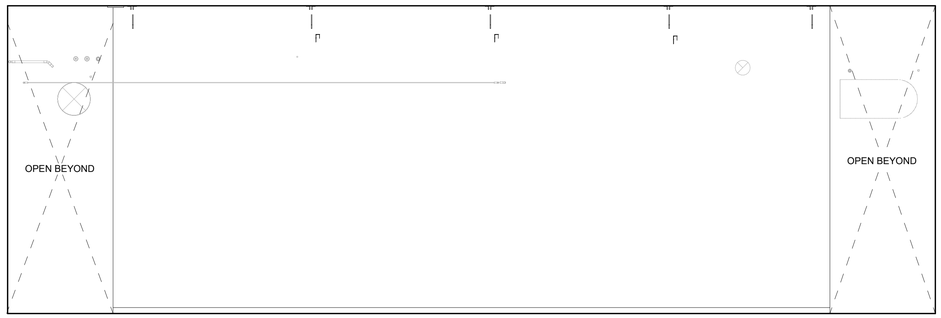

4 101D HALL - W
1/4" = 1'-0"

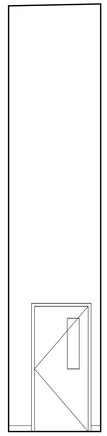

7 101E HALL - W
1/4" = 1'-0"

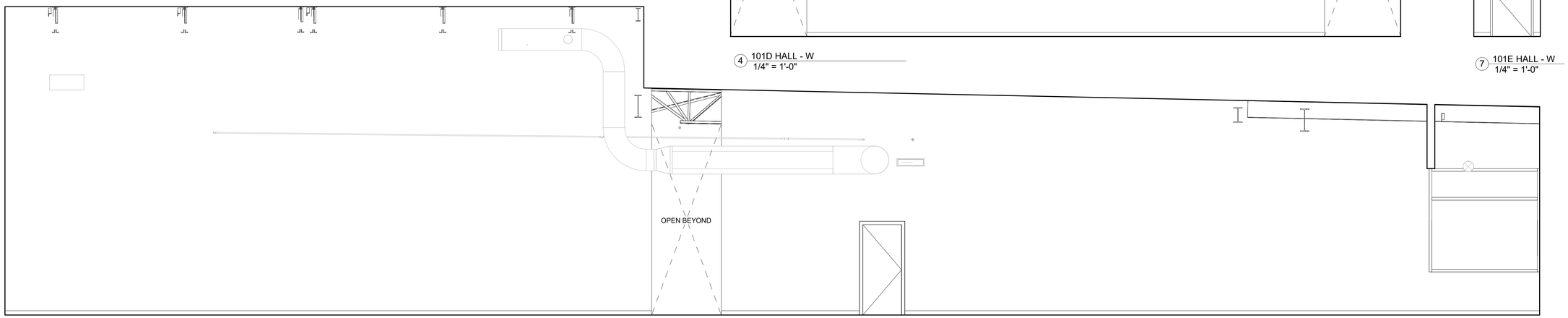

5 101E HALL - N
1/4" = 1'-0"

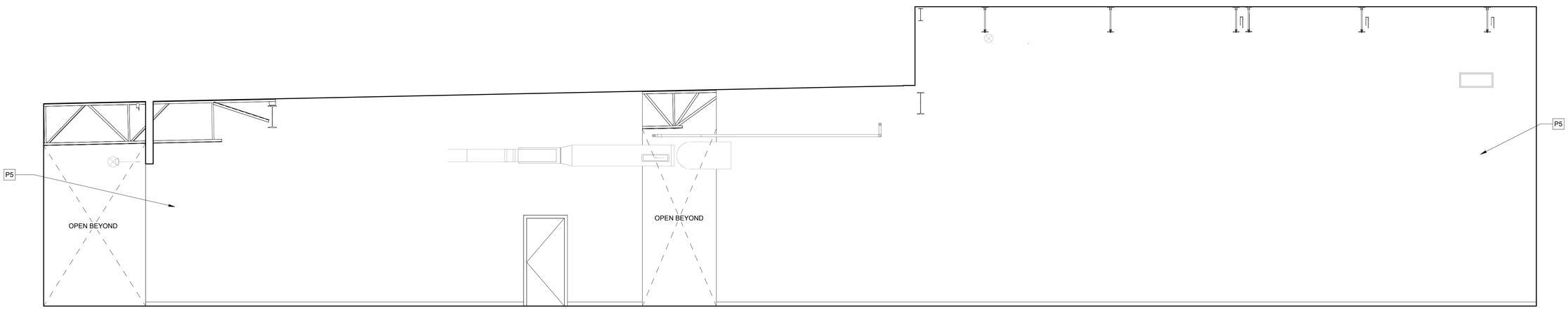

6 101E HALL - S
1/4" = 1'-0"

FINISH NOTES

IF NO FINISH CALLOUT IS PRESENT REFER TO NOTES ON SHEET A5.01 FOR SCHEDULED FINISHES.

PRCNC20240216

ZERVAS
209 PROSPECT STREET - BELLINGHAM, WA 98225
p.360.734.4744 - zervasgroup.com

9587 REGISTERED ARCHITECT
ANDREW J. KRZYSIEK
STATE OF WASHINGTON

City of Puyallup
Development & Permitting Services
ISSUED PERMIT

Building	Planning
Engineering	Public Works
Fire	Traffic

100% CD SET

REV	ISSUED FOR	DATE

NORTH. PLAN.

SCALE.
As indicated

PSE OPERATIONAL TRAINING CENTER

INTERIOR ELEVATIONS

PROJECT#. 202202.06
DRAWN. DL CHECK. SD
ISSUED. 01/26/24

A6.03

202202.06
Autodesk Docs://7222 - 5111 - PSE North Bend Precon Design/PSE-OTC_Current.rvt

1/26/2024 2:15:46 PM

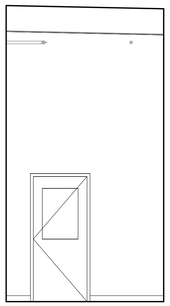

1 101F HALL - N
1/4" = 1'-0"

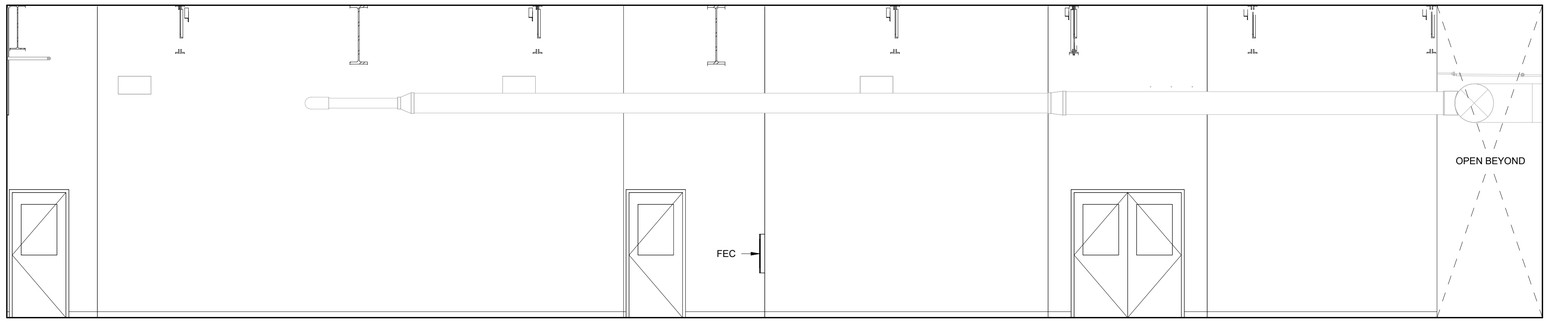

2 101F HALL - E
1/4" = 1'-0"

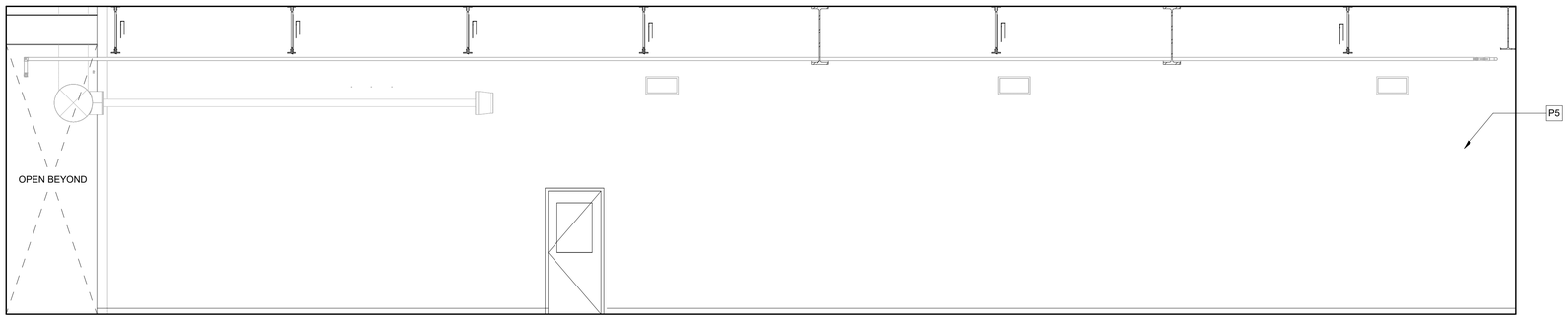

3 101F HALL - W
1/4" = 1'-0"

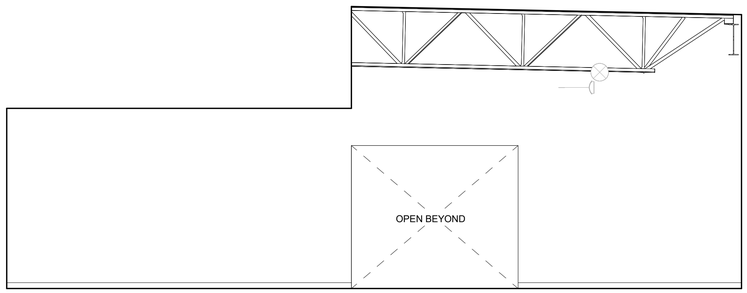

4 102 BREAK ROOM - N
1/4" = 1'-0"

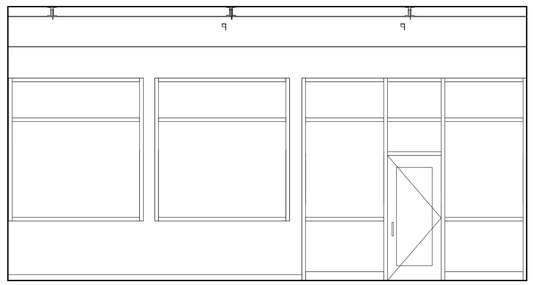

5 102 BREAK ROOM - E
1/4" = 1'-0"

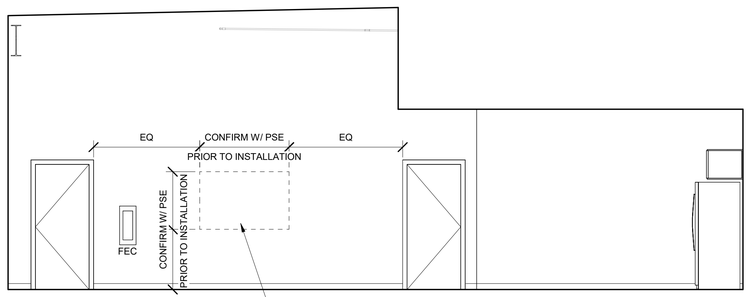

6 102 BREAK ROOM - S
1/4" = 1'-0"

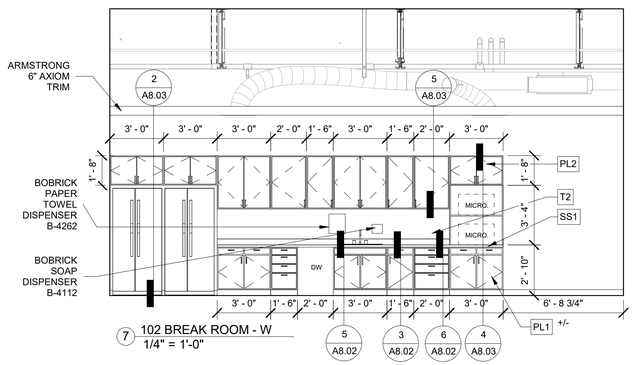

7 102 BREAK ROOM - W
1/4" = 1'-0"

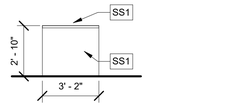

8 102 BREAK ROOM KITCHEN - N
1/4" = 1'-0"

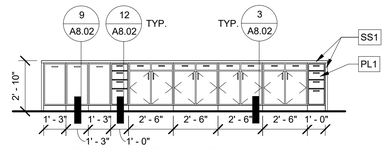

9 102 BREAK ROOM KITCHEN - E
1/4" = 1'-0"

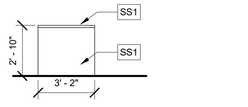

10 102 BREAK ROOM KITCHEN - S
1/4" = 1'-0"

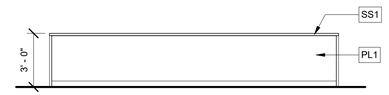

11 102 BREAK ROOM KITCHEN - W
1/4" = 1'-0"

FINISH NOTES

IF NO FINISH CALLOUT IS PRESENT REFER TO NOTES ON SHEET A5.01 FOR SCHEDULED FINISHES.

PRCNC20240216

ZERVAS
209 PROSPECT STREET - BELLINGHAM, WA 98225
p.360.734.4744 - zervasgroup.com

9587 REGISTERED ARCHITECT
ANDREW J. KRZYSIEK
STATE OF WASHINGTON

City of Puyallup
Development & Permitting Services
ISSUED PERMIT
Building | Planning | Engineering | Public Works | Fire | Traffic

100% CD SET

REV	ISSUED FOR	DATE

NORTH. PLAN.

SCALE.
As indicated

PSE
OPERATIONAL
TRAINING
CENTER

INTERIOR
ELEVATIONS

PROJECT#.	202202.06
DRAWN. DL	CHECK. SD
ISSUED.	01/26/24

A6.04

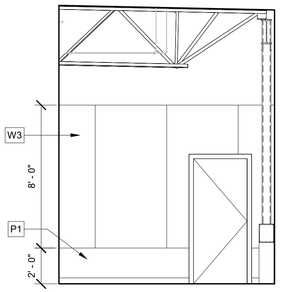

1 103 SECURITY - N
1/4" = 1'-0"

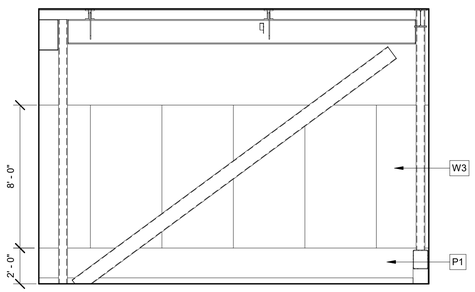

2 103 SECURITY - E
1/4" = 1'-0"

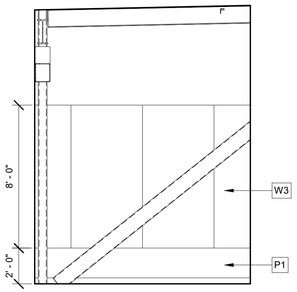

3 103 SECURITY - S
1/4" = 1'-0"

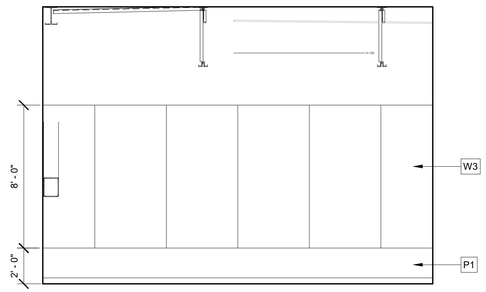

4 103 SECURITY - W
1/4" = 1'-0"

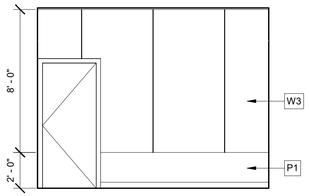

5 104 COMM ROOM - N
1/4" = 1'-0"

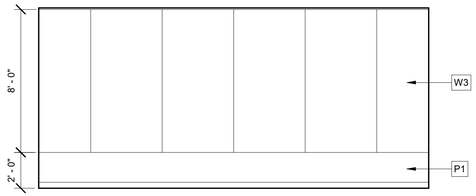

6 104 COMM ROOM - E
1/4" = 1'-0"

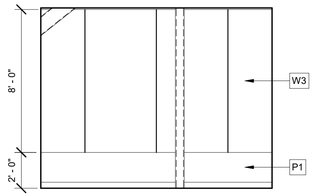

7 104 COMM ROOM - S
1/4" = 1'-0"

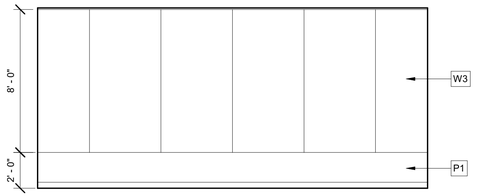

8 104 COMM ROOM - W
1/4" = 1'-0"

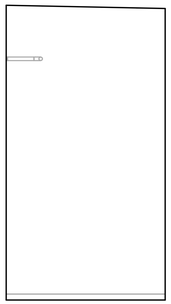

9 105 STORAGE - N
1/4" = 1'-0"

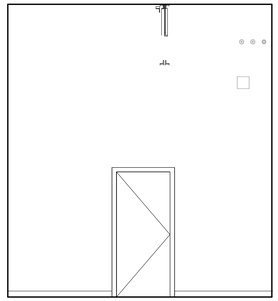

10 105 STORAGE - E
1/4" = 1'-0"

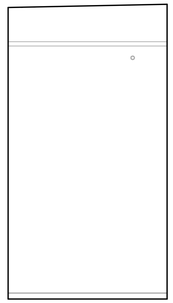

11 105 STORAGE - S
1/4" = 1'-0"

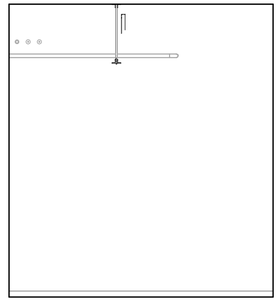

12 105 STORAGE - W
1/4" = 1'-0"

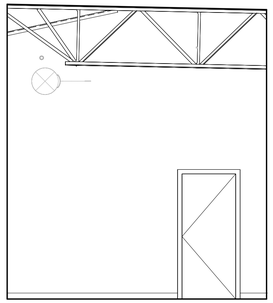

13 106 ELECTRICAL - N
1/4" = 1'-0"

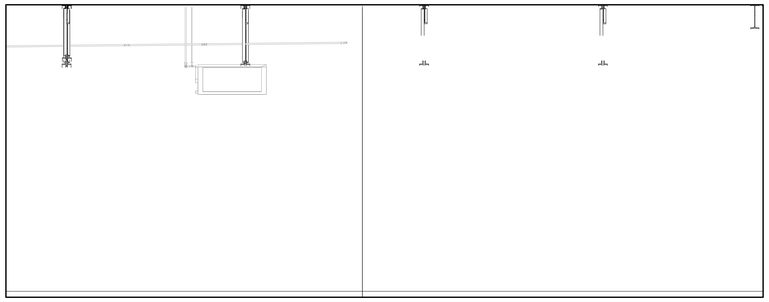

14 106 ELECTRICAL - E
1/4" = 1'-0"

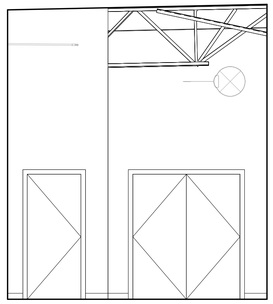

15 106 ELECTRICAL - S
1/4" = 1'-0"

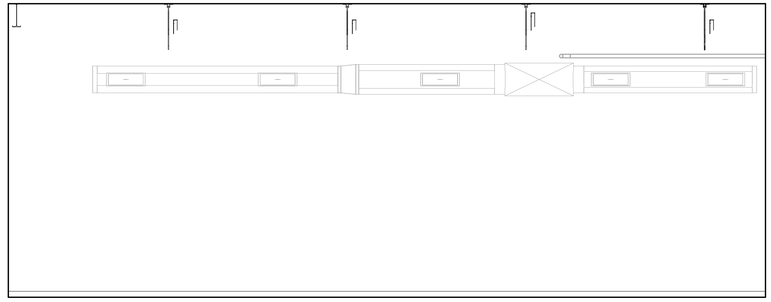

16 106 ELECTRICAL - W
1/4" = 1'-0"

FINISH NOTES

IF NO FINISH CALLOUT IS PRESENT REFER TO NOTES ON SHEET A5.01 FOR SCHEDULED FINISHES.

PRCNC20240216

ZERVAS
209 PROSPECT STREET - BELLINGHAM, WA 98225
p.360.734.4744 - zervasgroup.com

9587 REGISTERED ARCHITECT
ANDREW J. KRZYSIEK
STATE OF WASHINGTON

City of Puyallup
Development & Permitting Services
ISSUED PERMIT

Building	Planning
Engineering	Public Works
Fire	Traffic

100% CD SET

REV	ISSUED FOR	DATE

NORTH. PLAN.

SCALE.
As indicated

PSE OPERATIONAL TRAINING CENTER

INTERIOR ELEVATIONS

PROJECT#.	202202.06
DRAWN. DL	CHECK. SD
ISSUED.	01/26/24

A6.05

1/26/2024 2:15:59 PM

PRCNC20240216

FINISH NOTES

IF NO FINISH CALLOUT IS PRESENT REFER TO NOTES ON SHEET A5.01 FOR SCHEDULED FINISHES.

ZERVAS
209 PROSPECT STREET - BELLINGHAM, WA 98225
p.360.734.4744 - zervasgroup.com

9587 REGISTERED ARCHITECT
ANDREW J. KRZYSIEK
STATE OF WASHINGTON

City of Puyallup
Development & Permitting Services
ISSUED PERMIT
Building | Planning
Engineering | Public Works
Fire | Traffic

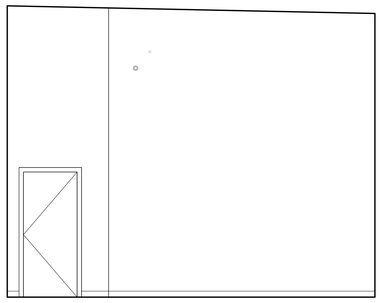

1 107 MECHICAL - N
1/4" = 1'-0"

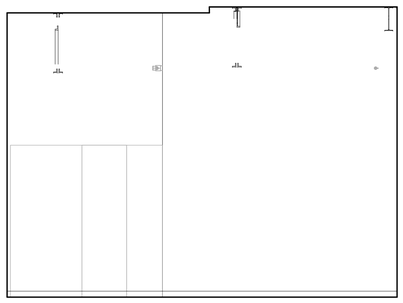

2 107 MECHICAL - E
1/4" = 1'-0"

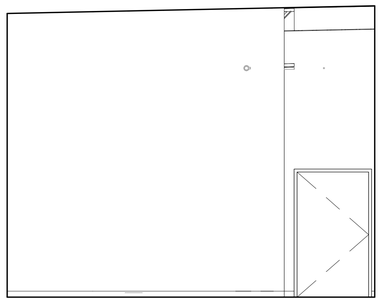

3 107 MECHICAL - S
1/4" = 1'-0"

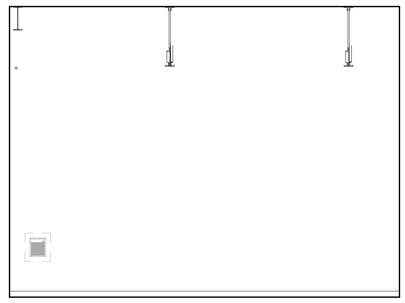

4 107 MECHICAL - W
1/4" = 1'-0"

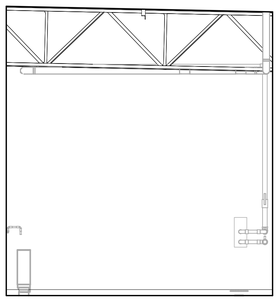

5 108 FIRE RISER / MECH - N
1/4" = 1'-0"

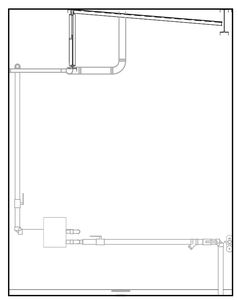

6 108 FIRE RISER / MECH - E
1/4" = 1'-0"

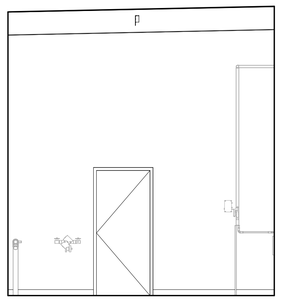

7 108 FIRE RISER / MECH - S
1/4" = 1'-0"

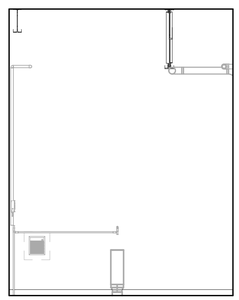

8 108 FIRE RISER / MECH - W
1/4" = 1'-0"

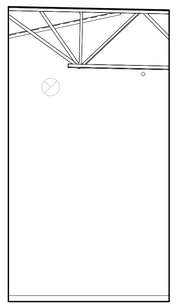

9 109 FACILITIES - N
1/4" = 1'-0"

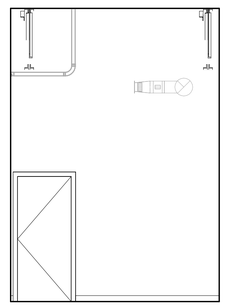

10 109 FACILITIES - E
1/4" = 1'-0"

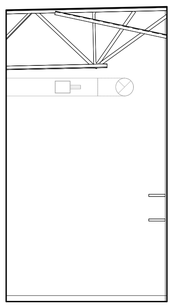

11 109 FACILITIES - S
1/4" = 1'-0"

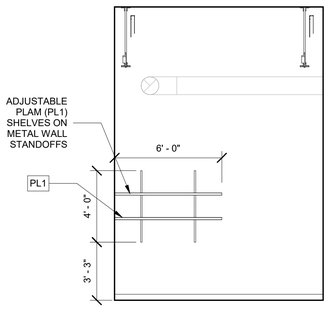

12 109 FACILITIES - W
1/4" = 1'-0"

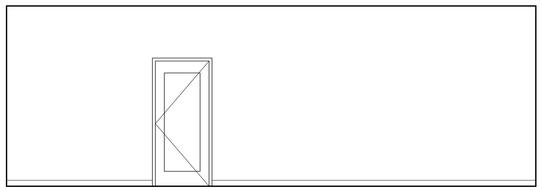

13 110 WORKROOM - N
1/4" = 1'-0"

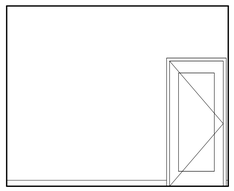

14 110 WORKROOM - E
1/4" = 1'-0"

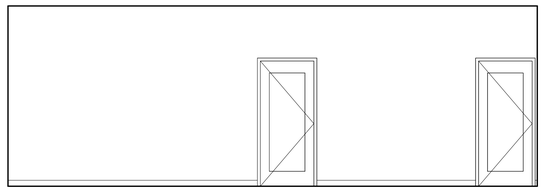

15 110 WORKROOM - S
1/4" = 1'-0"

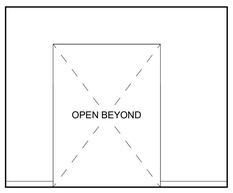

16 110 WORKROOM - W
1/4" = 1'-0"

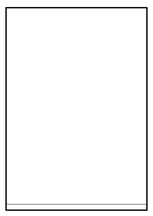

17 111 FOCUS - N
1/4" = 1'-0"

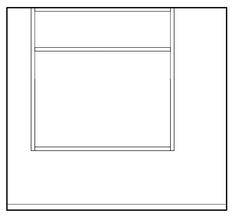

18 111 FOCUS - E
1/4" = 1'-0"

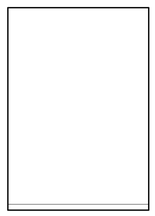

19 111 FOCUS - S
1/4" = 1'-0"

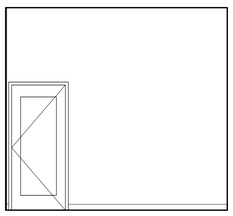

20 111 FOCUS - W
1/4" = 1'-0"

100% CD SET

REV	ISSUED FOR	DATE

NORTH. PLAN.

SCALE.
As indicated

PSE OPERATIONAL TRAINING CENTER

INTERIOR ELEVATIONS

PROJECT#.			202202.06
DRAWN.	DL	CHECK.	SD
ISSUED.			01/26/24

A6.06

202202.06
Autodesk Docs://7222 - 5111 - PSE North Bend Precon Design/PSE-OTC_Current.rvt

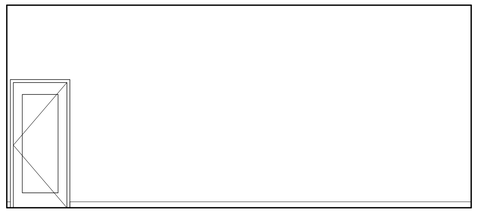

1 112 CONFRENCE - N
1/4" = 1'-0"

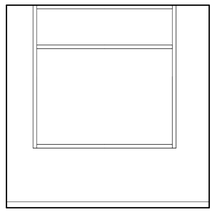

2 112 CONFRENCE - E
1/4" = 1'-0"

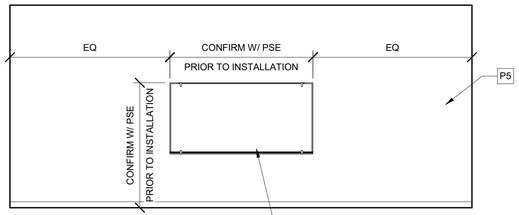

3 112 CONFRENCE - S
1/4" = 1'-0"

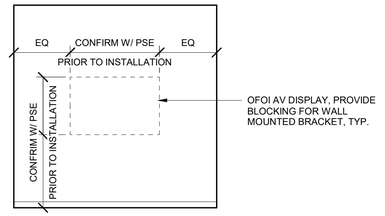

4 112 CONFRENCE - W
1/4" = 1'-0"

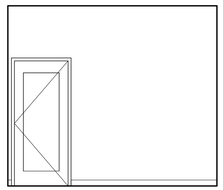

5 113 HUDDLE - N
1/4" = 1'-0"



6 113 HUDDLE - E
1/4" = 1'-0"

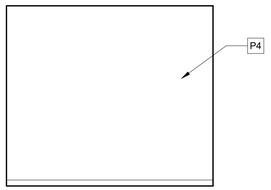

7 113 HUDDLE - S
1/4" = 1'-0"



8 113 HUDDLE - W
1/4" = 1'-0"

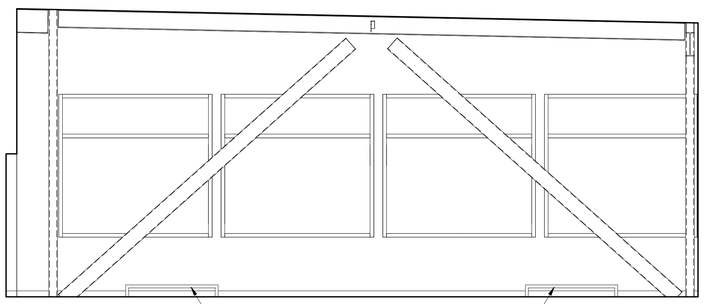

9 114 OPEN OFFICE - N
1/4" = 1'-0"

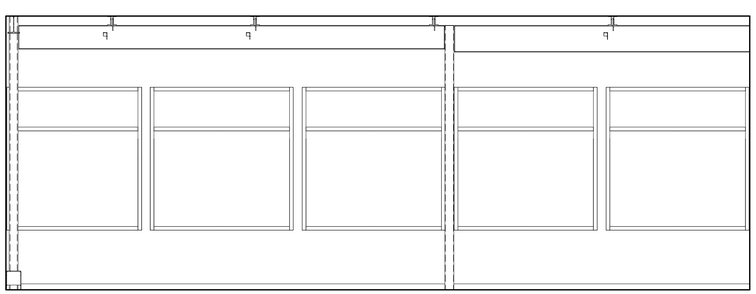

10 114 OPEN OFFICE - E
1/4" = 1'-0"



11 114 OPEN OFFICE - S
1/4" = 1'-0"

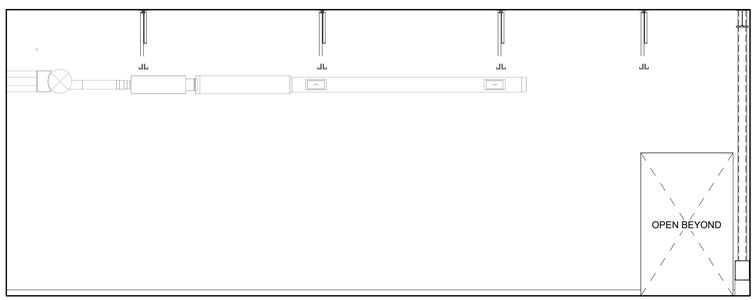

12 114 OPEN OFFICE - W
1/4" = 1'-0"

FINISH NOTES

IF NO FINISH CALLOUT IS PRESENT REFER TO NOTES ON SHEET A5.01 FOR SCHEDULED FINISHES.

PRCNC20240216

ZERVAS
209 PROSPECT STREET - BELLINGHAM, WA 98225
p.360.734.4744 - zervasgroup.com

9587 REGISTERED ARCHITECT
ANDREW J. KRZYSIEK
STATE OF WASHINGTON

City of Puyallup
Development & Permitting Services
ISSUED PERMIT

Building	Planning
Engineering	Public Works
Fire	Traffic

100% CD SET

REV	ISSUED FOR	DATE

NORTH. PLAN.

SCALE.
As indicated

PSE OPERATIONAL TRAINING CENTER

INTERIOR ELEVATIONS

PROJECT#. 202202.06
DRAWN. DL CHECK. SD
ISSUED. 01/26/24

A6.07

1/26/2024 2:16:12 PM

PRCNC20240216

ZERVAS
209 PROSPECT STREET - BELLINGHAM, WA 98225
p.360.734.4744 - zervasgroup.com

9587 REGISTERED ARCHITECT
ANDREW J. KRZYSIEK
STATE OF WASHINGTON

FINISH NOTES

IF NO FINISH CALLOUT IS PRESENT REFER TO NOTES ON SHEET A5.01 FOR SCHEDULED FINISHES.

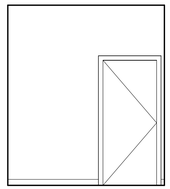

1 115 MOTHER'S ROOM - N
1/4" = 1'-0"

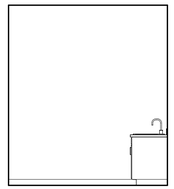

2 115 MOTHER'S ROOM - E
1/4" = 1'-0"

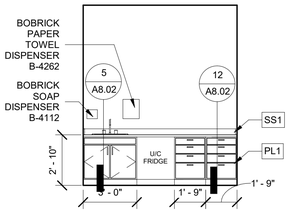

3 115 MOTHER'S ROOM - S
1/4" = 1'-0"

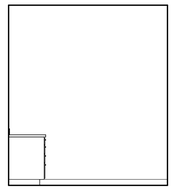

4 115 MOTHER'S ROOM - W
1/4" = 1'-0"

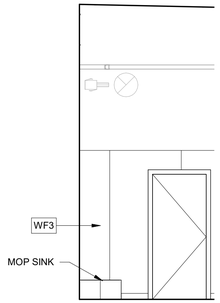

5 116 JANITOR - N
1/4" = 1'-0"

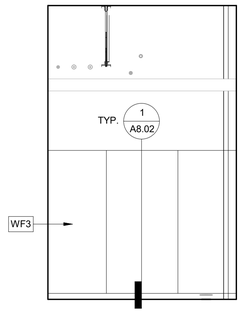

6 116 JANITOR - E
1/4" = 1'-0"

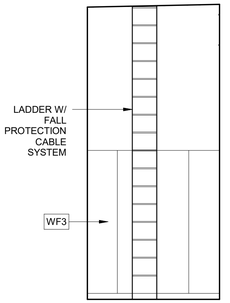

7 116 JANITOR - S
1/4" = 1'-0"

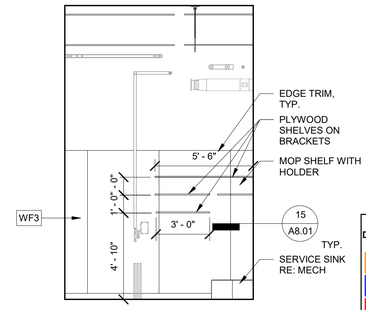

8 116 JANITOR - W
1/4" = 1'-0"

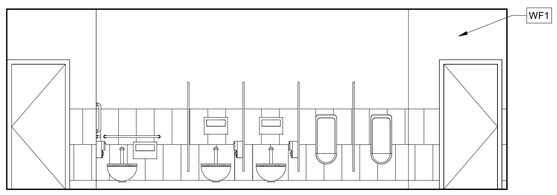

9 117 MENS - N
1/4" = 1'-0"

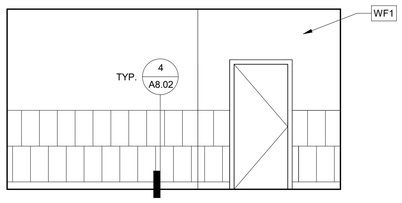

10 117 MENS - E
1/4" = 1'-0"

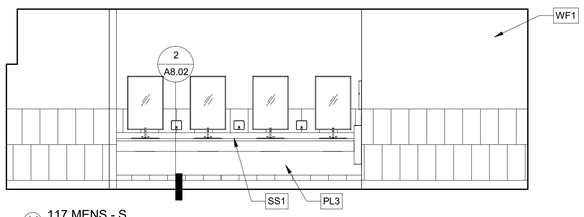

11 117 MENS - S
1/4" = 1'-0"

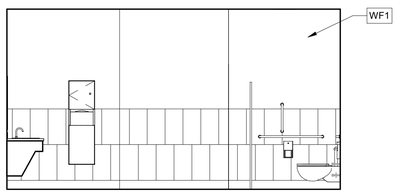

12 117 MENS - W
1/4" = 1'-0"

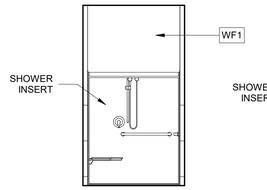

13 118 MENS SHOWER - N
1/4" = 1'-0"

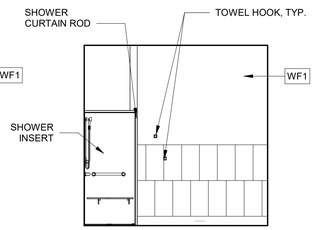

14 118 MENS SHOWER - E
1/4" = 1'-0"

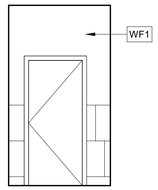

15 118 MENS SHOWER - S
1/4" = 1'-0"

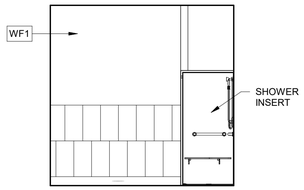

16 118 MENS SHOWER - W
1/4" = 1'-0"

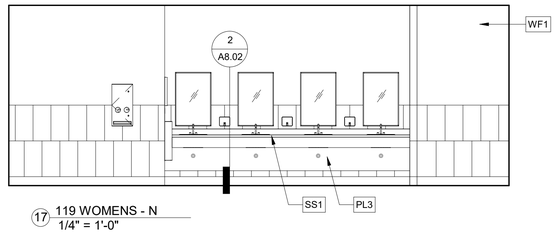

17 119 WOMENS - N
1/4" = 1'-0"

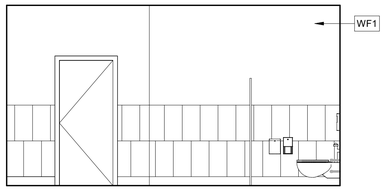

18 119 WOMENS - E
1/4" = 1'-0"

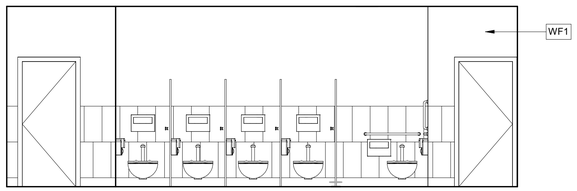

19 119 WOMENS - S
1/4" = 1'-0"

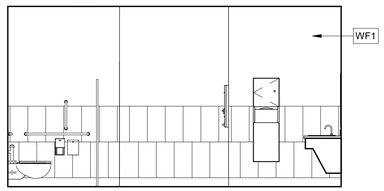

20 119 WOMENS - W
1/4" = 1'-0"

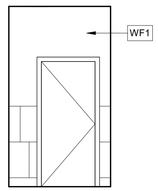

21 120 WOMENS SHOWER - N
1/4" = 1'-0"

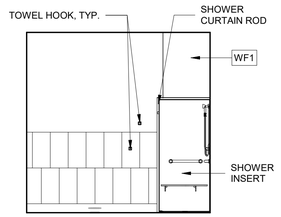

22 120 WOMENS SHOWER - E
1/4" = 1'-0"

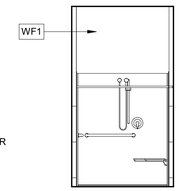

23 120 WOMENS SHOWER - S
1/4" = 1'-0"

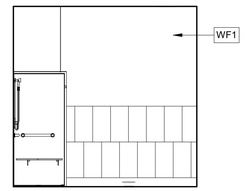

24 120 WOMENS SHOWER - W
1/4" = 1'-0"

City of Puyallup
Development & Permitting Services
ISSUED PERMIT
Building | Planning | Engineering | Public Works | Fire | Traffic

100% CD SET

REV	ISSUED FOR	DATE

NORTH. PLAN.

SCALE.
As indicated

PSE OPERATIONAL TRAINING CENTER

INTERIOR ELEVATIONS

PROJECT#.	202202.06
DRAWN.	DL
CHECK.	SD
ISSUED.	01/26/24

A6.08

202202.06
Autodesk Docs://7222 - 5111 - PSE North Bend Precon Design/PSE-OTC_Current.rvt

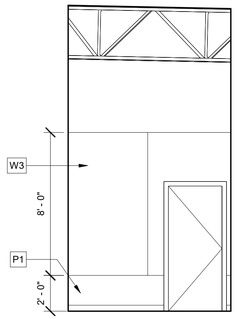

1 121 IDF - N
1/4" = 1'-0"

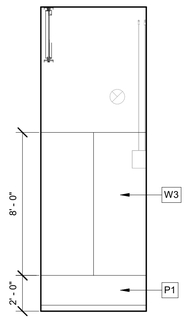

2 121 IDF - E
1/4" = 1'-0"

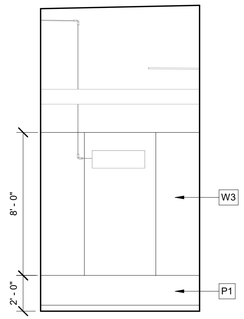

3 121 IDF - S
1/4" = 1'-0"

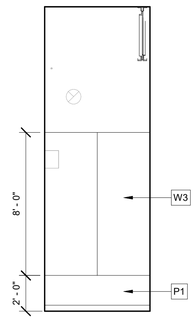

4 121 IDF - W
1/4" = 1'-0"

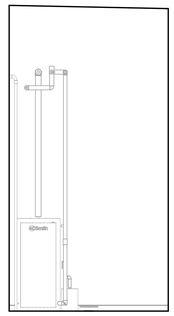

5 122 MECHANICAL - N
1/4" = 1'-0"

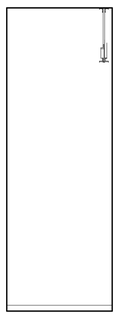

6 122 MECHANICAL - E
1/4" = 1'-0"

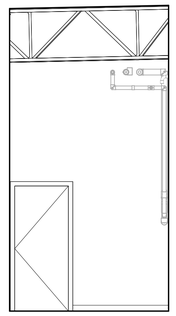

7 122 MECHANICAL - S
1/4" = 1'-0"

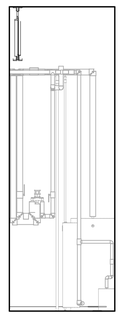

8 122 MECHANICAL - W
1/4" = 1'-0"

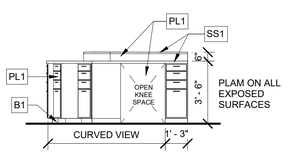

9 123 APPLIANCE LAB DESK_FRONT - E
1/4" = 1'-0"

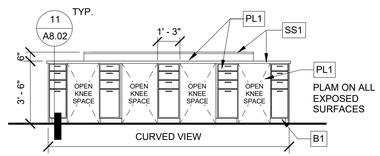

10 123 APPLIANCE LAB DESK_FRONT - S
1/4" = 1'-0"

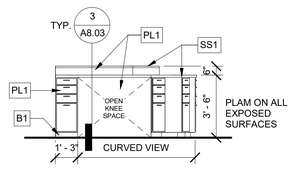

11 123 APPLIANCE LAB DESK_FRONT - W
1/4" = 1'-0"

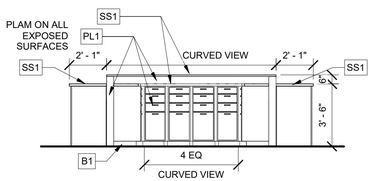

12 123 APPLIANCE LAB DESK_INTERIOR - N
1/4" = 1'-0"

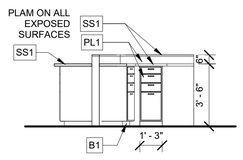

13 123 APPLIANCE LAB DESK_INTERIOR - E
1/4" = 1'-0"

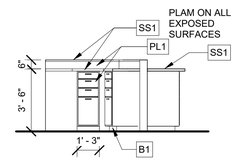

14 123 APPLIANCE LAB DESK_INTERIOR - W
1/4" = 1'-0"

FINISH NOTES

IF NO FINISH CALLOUT IS PRESENT REFER TO NOTES ON SHEET A5.01 FOR SCHEDULED FINISHES.

PRCNC20240216

ZERVAS
209 PROSPECT STREET - BELLINGHAM, WA 98225
p.360.734.4744 - zervasgroup.com

9587 REGISTERED ARCHITECT
ANDREW J. KRZYSIEK
STATE OF WASHINGTON

City of Puyallup
Development & Permitting Services
ISSUED PERMIT

Building	Planning
Engineering	Public Works
Fire	Traffic

100% CD SET

REV	ISSUED FOR	DATE
2	Redlines	Date 2

NORTH. PLAN.

SCALE.
As indicated

PSE OPERATIONAL TRAINING CENTER

INTERIOR ELEVATIONS

PROJECT#.			202202.06
DRAWN.	DL	CHECK.	SD
ISSUED.			01/26/24

A6.09

1/26/2024 2:16:22 PM

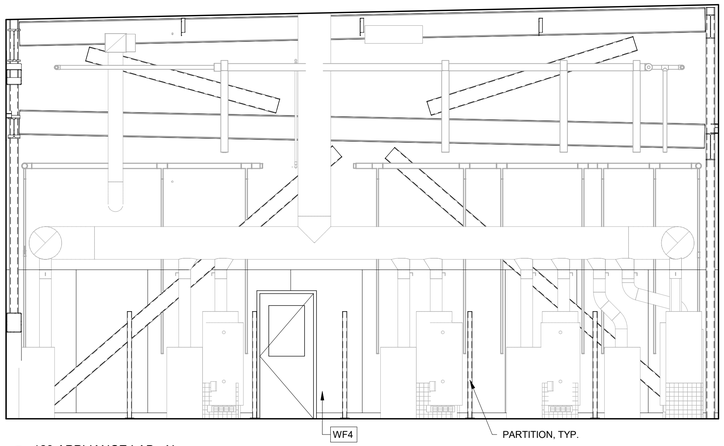

1 123 APPLIANCE LAB - N
1/4" = 1'-0"

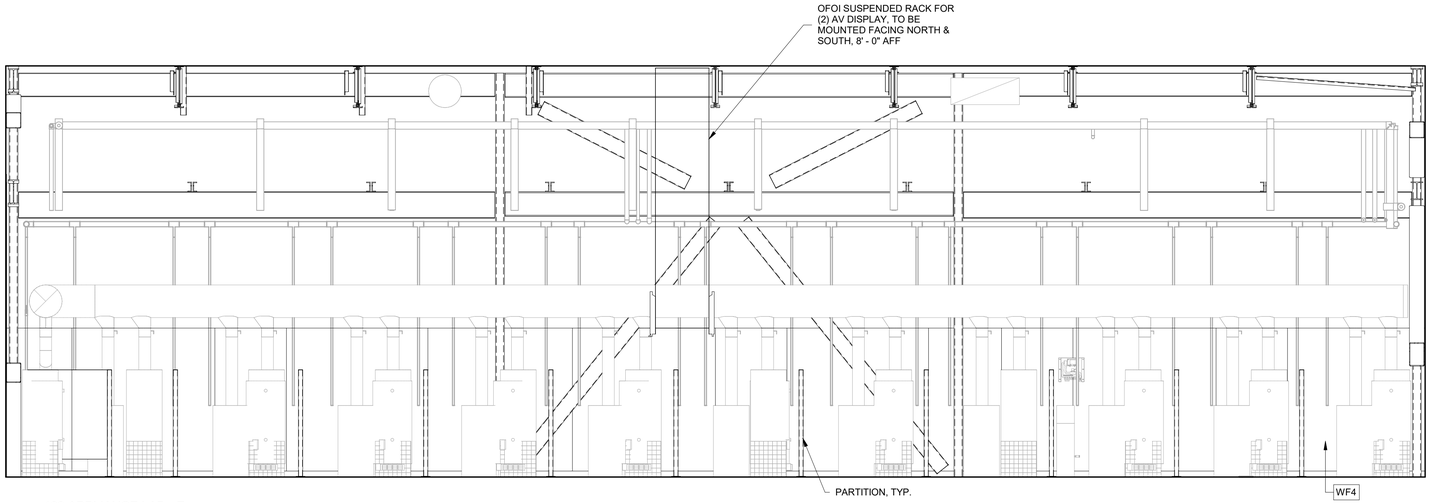

2 123 APPLIANCE LAB - E
1/4" = 1'-0"

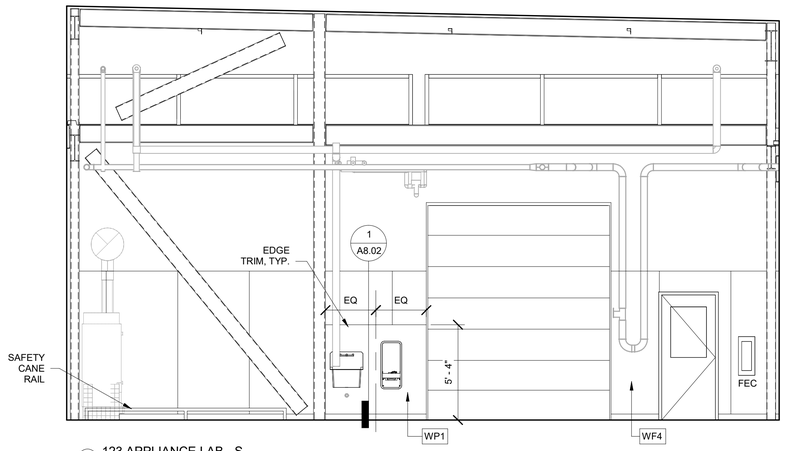

3 123 APPLIANCE LAB - S
1/4" = 1'-0"

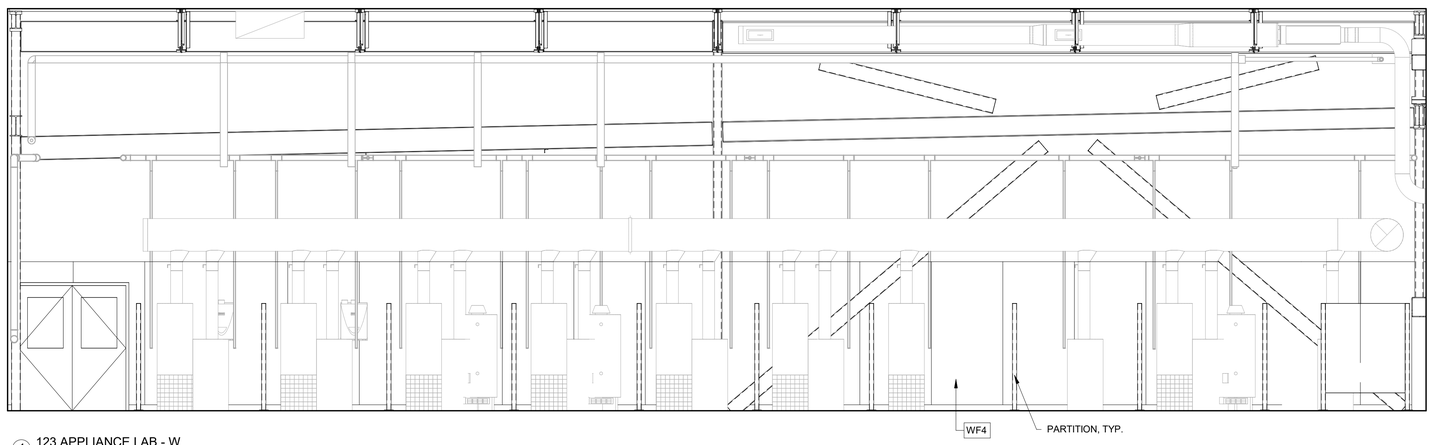

4 123 APPLIANCE LAB - W
1/4" = 1'-0"

FINISH NOTES

IF NO FINISH CALLOUT IS PRESENT REFER TO NOTES ON SHEET A5.01 FOR SCHEDULED FINISHES.

PRCNC20240216

ZERVAS
209 PROSPECT STREET - BELLINGHAM, WA 98225
p.360.734.4744 - zervasgroup.com

9587 REGISTERED ARCHITECT
ANDREW J. KRZYSIEK
STATE OF WASHINGTON

City of Puyallup
Development & Permitting Services
ISSUED PERMIT

Building	Planning
Engineering	Public Works
Fire	Traffic

100% CD SET

REV	ISSUED FOR	DATE

NORTH. PLAN.

SCALE.
As indicated

PSE OPERATIONAL TRAINING CENTER

INTERIOR ELEVATIONS

PROJECT#.	202202.06
DRAWN. DL	CHECK. SD
ISSUED.	01/26/24

A6.10

202202.06
Autodesk Docs://7222 - 5111 - PSE North Bend Precon Design/PSE-OTC_Current.rvt

1/26/2024 2:16:26 PM

PRCNC20240216

ZERVAS
209 PROSPECT STREET - BELLINGHAM, WA 98225
p.360.734.4744 - zervasgroup.com

9587 REGISTERED ARCHITECT
ANDREW J. KRZYSIEK
STATE OF WASHINGTON

FINISH NOTES

IF NO FINISH CALLOUT IS PRESENT REFER TO NOTES ON SHEET A5.01 FOR SCHEDULED FINISHES.

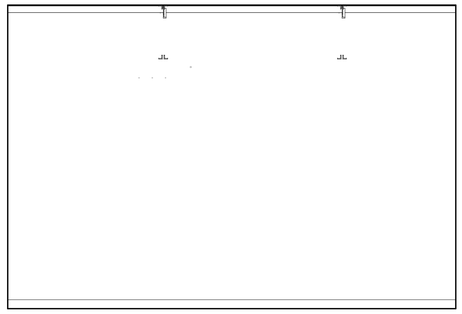

1 124 WAREHOUSE - N
1/4" = 1'-0"

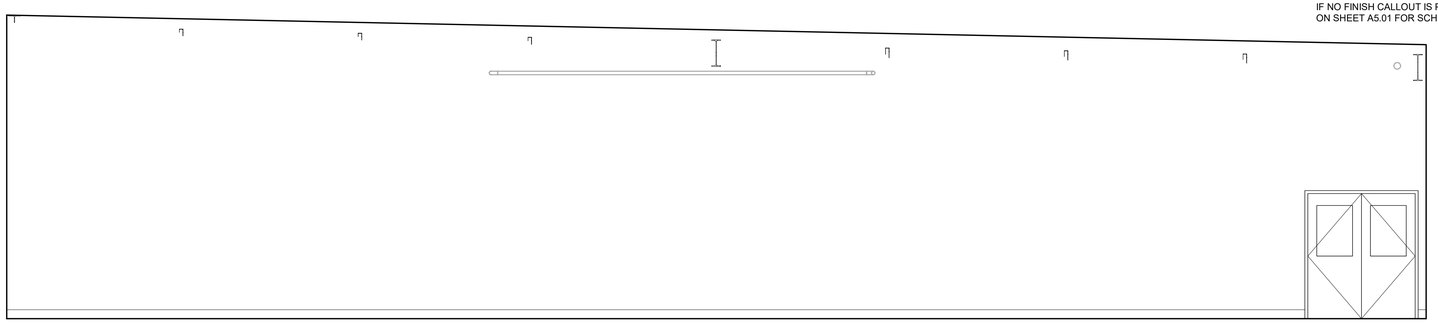

2 124 WAREHOUSE - E
1/4" = 1'-0"

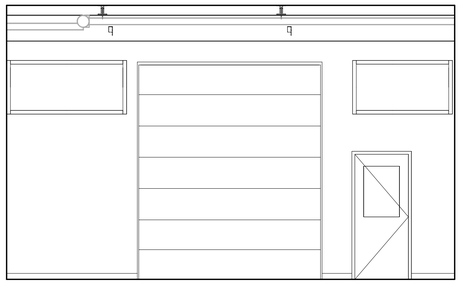

3 124 WAREHOUSE - S
1/4" = 1'-0"

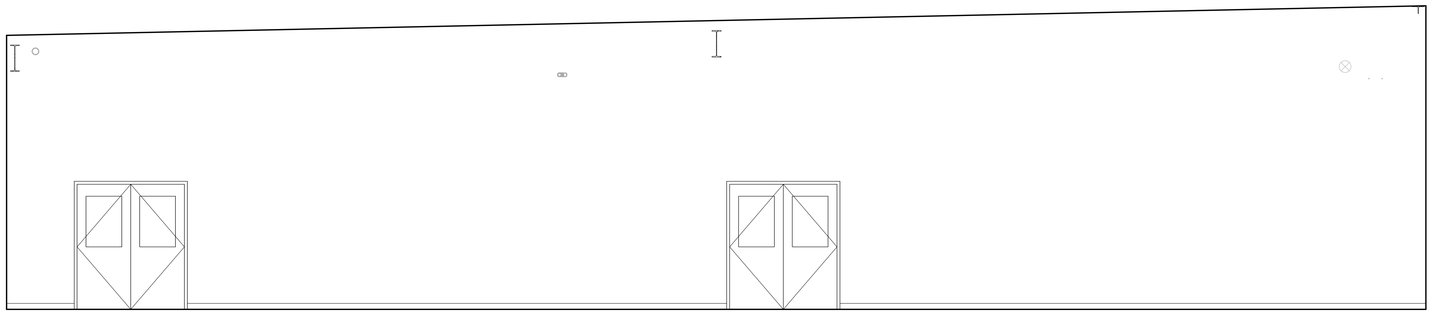

4 124 WAREHOUSE - W
1/4" = 1'-0"

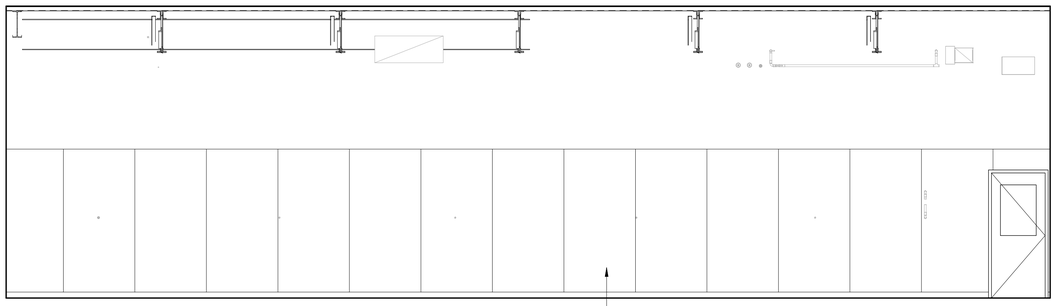

5 125 FITTING & INSTALLATION LAB - N
1/4" = 1'-0"

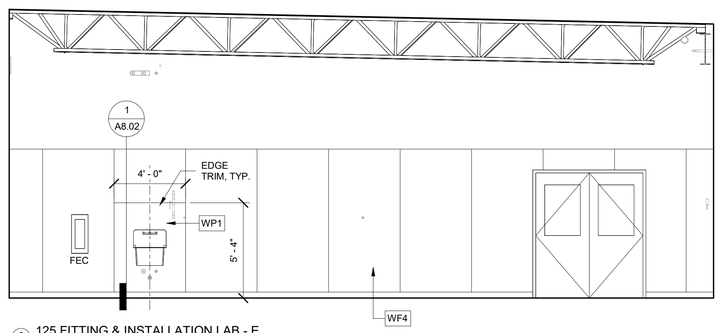

6 125 FITTING & INSTALLATION LAB - E
1/4" = 1'-0"

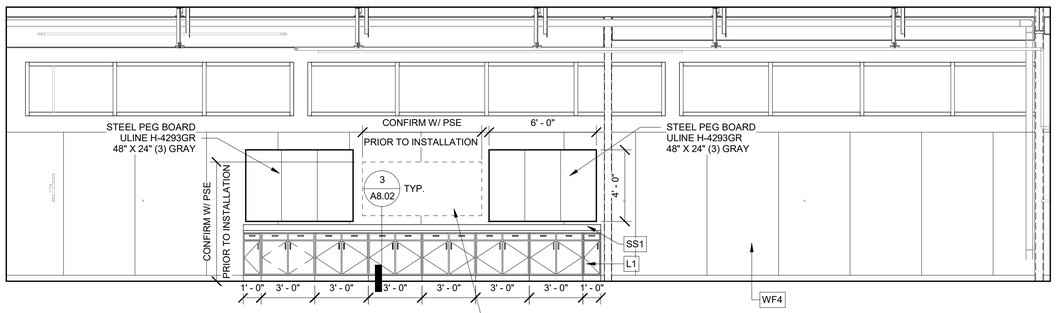

7 125 FITTING & INSTALLATION LAB - S
1/4" = 1'-0"

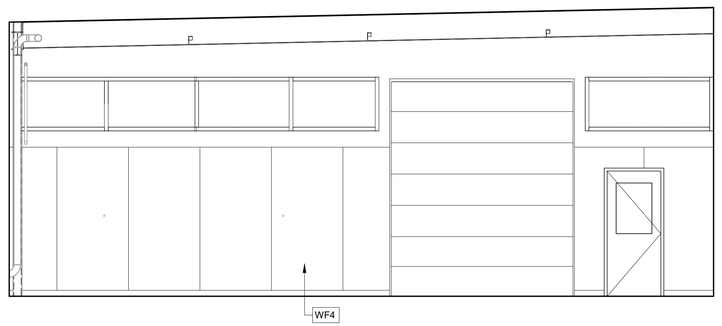

8 125 FITTING & INSTALLATION LAB - W
1/4" = 1'-0"

City of Puyallup
Development & Permitting Services
ISSUED PERMIT

Building	Planning
Engineering	Public Works
Fire	Traffic

100% CD SET

REV	ISSUED FOR	DATE

NORTH. PLAN.

SCALE.
As indicated

PSE
OPERATIONAL
TRAINING
CENTER

INTERIOR
ELEVATIONS

PROJECT#			202202.06
DRAWN.	DL	CHECK.	SD
ISSUED.			01/26/24

A6.11

202202.06
Autodesk Docs://7222 - 5111 - PSE North Bend Precon Design/PSE-OTC_Current.rvt

PRCNC20240216

ZERVAS
209 PROSPECT STREET - BELLINGHAM, WA 98225
p.360.734.4744 - zervasgroup.com

9587 REGISTERED ARCHITECT
ANDREW J. KRZYSIEK
STATE OF WASHINGTON

FINISH NOTES

IF NO FINISH CALLOUT IS PRESENT REFER TO NOTES ON SHEET A5.01 FOR SCHEDULED FINISHES.

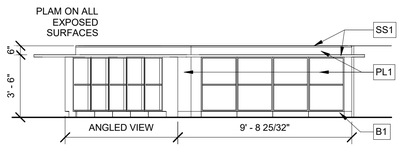

1 125 FITTING LAB DESK_FRONT VIEW - E
1/4" = 1'-0"

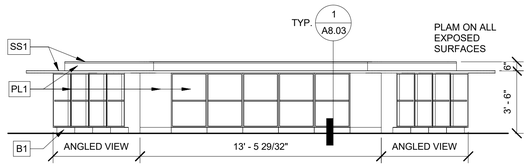

2 125 FITTING LAB DESK_FRONT VIEW - S
1/4" = 1'-0"

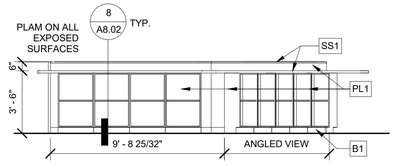

3 125 FITTING LAB DESK_FRONT VIEW - W
1/4" = 1'-0"

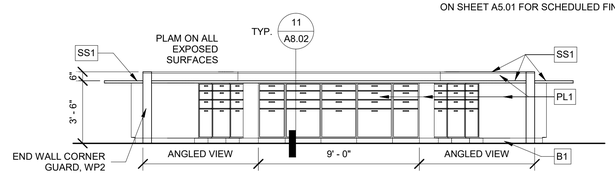

4 125 FITTING LAB DESK_INTERIOR VIEW - N
1/4" = 1'-0"

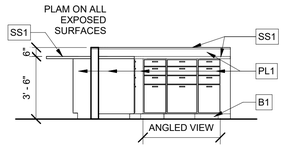

5 125 FITTING LAB DESK_INTERIOR VIEW - E
1/4" = 1'-0"

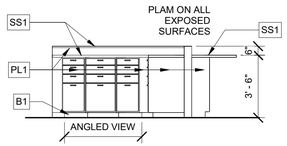

6 125 FITTING LAB DESK INTERIOR VIEW - W
1/4" = 1'-0"

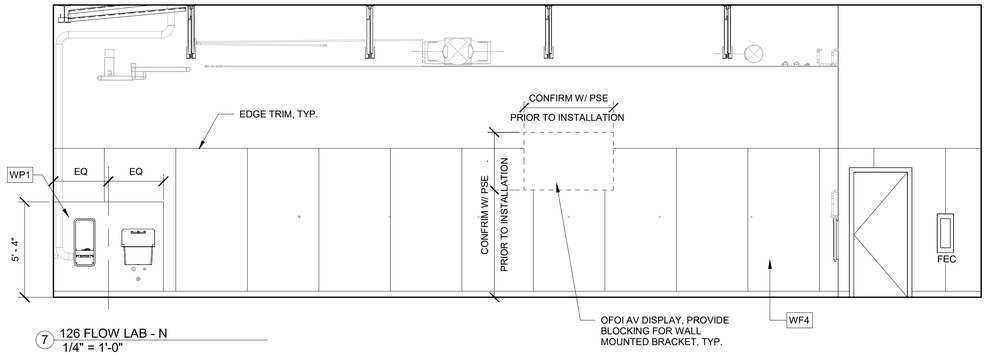

7 126 FLOW LAB - N
1/4" = 1'-0"

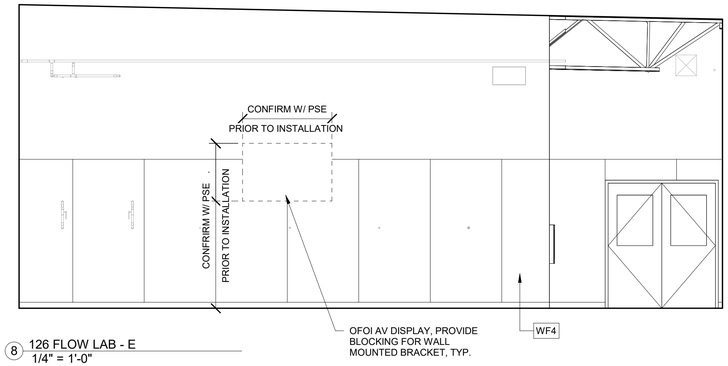

8 126 FLOW LAB - E
1/4" = 1'-0"

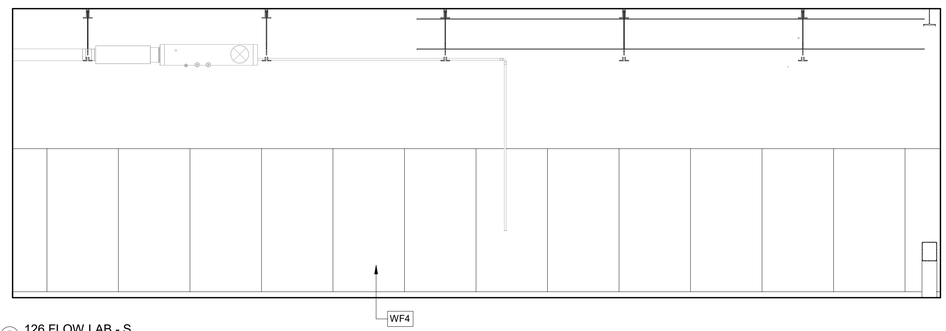

9 126 FLOW LAB - S
1/4" = 1'-0"

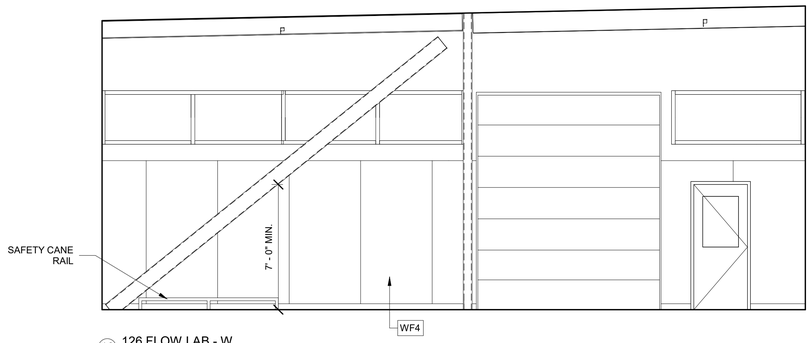

10 126 FLOW LAB - W
1/4" = 1'-0"

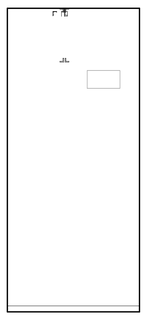

11 127 PC STORAGE - N
1/4" = 1'-0"

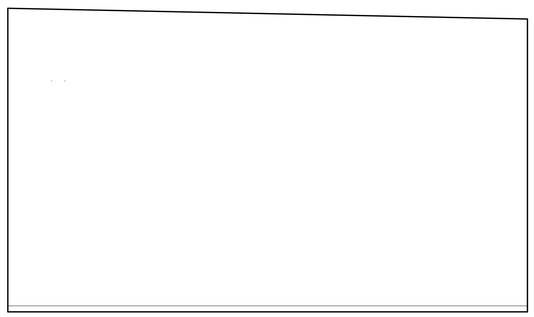

12 127 PC STORAGE - E
1/4" = 1'-0"

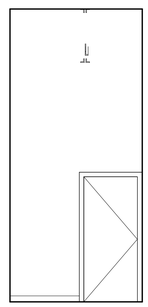

13 127 PC STORAGE - S
1/4" = 1'-0"

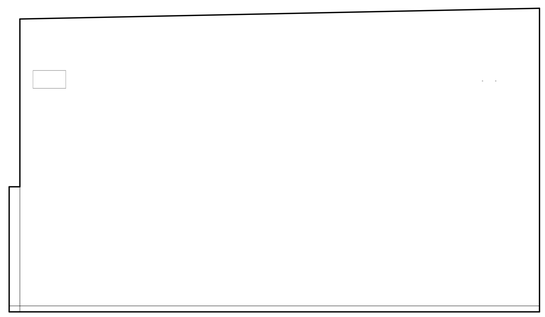

14 127 PC STORAGE - W
1/4" = 1'-0"

City of Puyallup
Development & Permitting Services
ISSUED PERMIT

Building	Planning
Engineering	Public Works
Fire	Traffic

100% CD SET

REV	ISSUED FOR	DATE
2	Redlines	Date 2

NORTH. PLAN.

SCALE.
As indicated

PSE OPERATIONAL TRAINING CENTER

INTERIOR ELEVATIONS

PROJECT#.			202202.06
DRAWN.	DL	CHECK.	SD
ISSUED.			01/26/24

A6.12

1/26/2024 2:16:37 PM

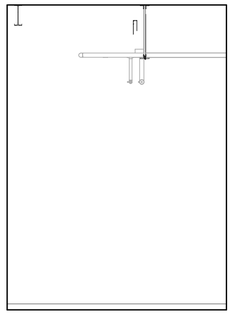

1 128 VESTIBULE - N
1/4" = 1'-0"

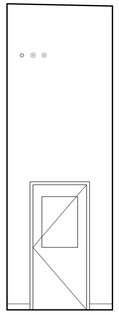

2 128 VESTIBULE - E
1/4" = 1'-0"

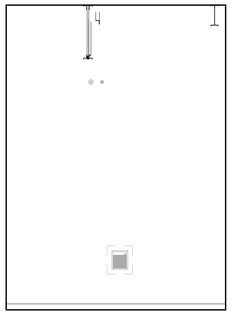

3 128 VESTIBULE - S
1/4" = 1'-0"

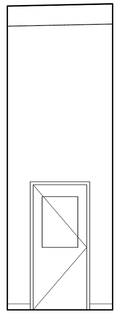

4 128 VESTIBULE - W
1/4" = 1'-0"

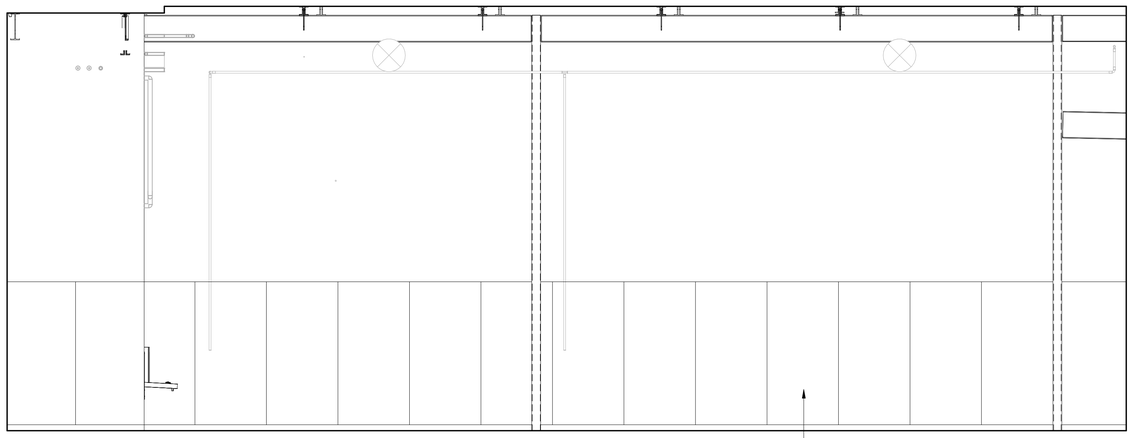

5 129 GAS OP TRAINING - N
1/4" = 1'-0"

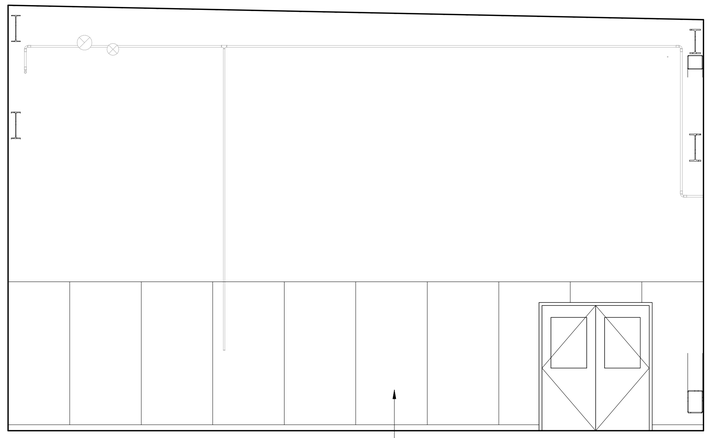

6 129 GAS OP TRAINING - E
1/4" = 1'-0"

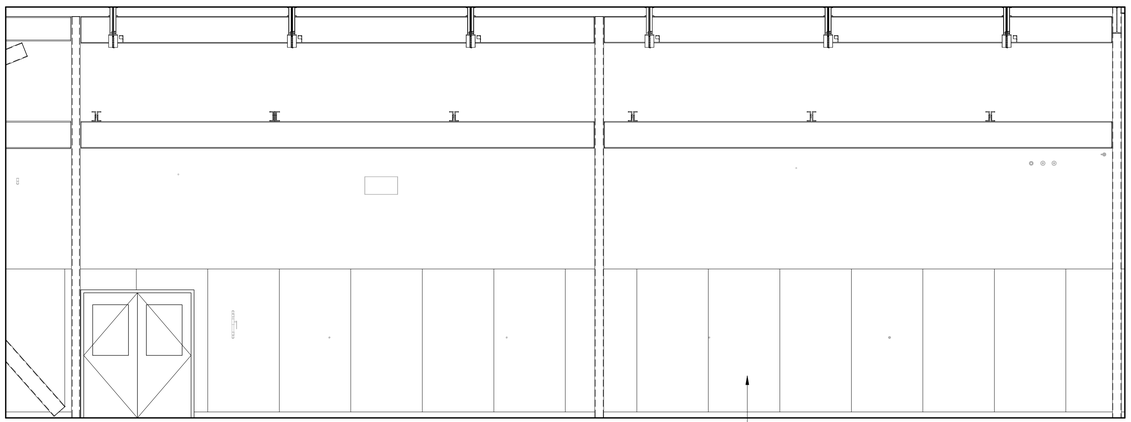

7 129 GAS OP TRAINING - S
1/4" = 1'-0"

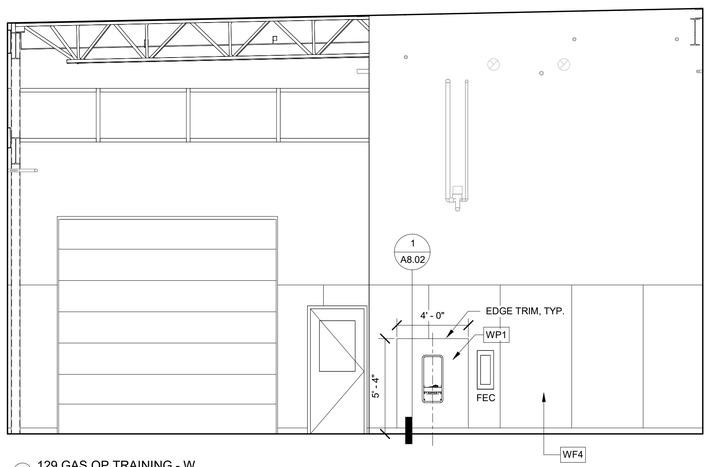

8 129 GAS OP TRAINING - W
1/4" = 1'-0"

FINISH NOTES

IF NO FINISH CALLOUT IS PRESENT REFER TO NOTES ON SHEET A5.01 FOR SCHEDULED FINISHES.

PRCNC20240216

ZERVAS
209 PROSPECT STREET - BELLINGHAM, WA 98225
p.360.734.4744 - zervasgroup.com

9587 REGISTERED ARCHITECT
ANDREW J. KRZYSIEK
STATE OF WASHINGTON

City of Puyallup
Development & Permitting Services
ISSUED PERMIT
Building | Planning
Engineering | Public Works
Fire | Traffic

100% CD SET

REV	ISSUED FOR	DATE
2	Redlines	Date 2

NORTH. PLAN.

SCALE.
As indicated

PSE OPERATIONAL TRAINING CENTER

INTERIOR ELEVATIONS

PROJECT#. 202202.06
DRAWN. DL CHECK. SD
ISSUED. 01/26/24

A6.13

202202.06
Autodesk Docs://7222 - 5111 - PSE North Bend Precon Design/PSE-OTC_Current.rvt

1/26/2024 2:16:39 PM

PRCNC20240216

ZERVAS
209 PROSPECT STREET - BELLINGHAM, WA 98225
p.360.734.4744 - zervasgroup.com

9587 REGISTERED ARCHITECT
ANDREW J. KRZYSIEK
STATE OF WASHINGTON

FINISH NOTES

IF NO FINISH CALLOUT IS PRESENT REFER TO NOTES ON SHEET A5.01 FOR SCHEDULED FINISHES.

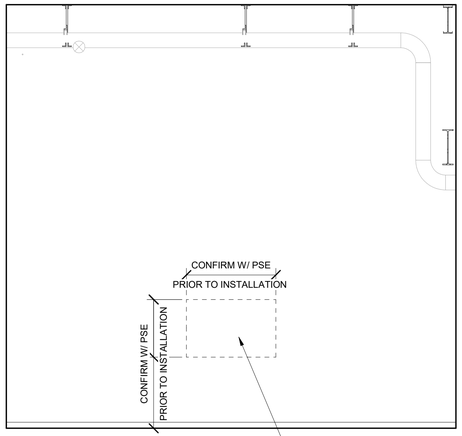

1 130 GAS WORKER LAB - N
1/4" = 1'-0"

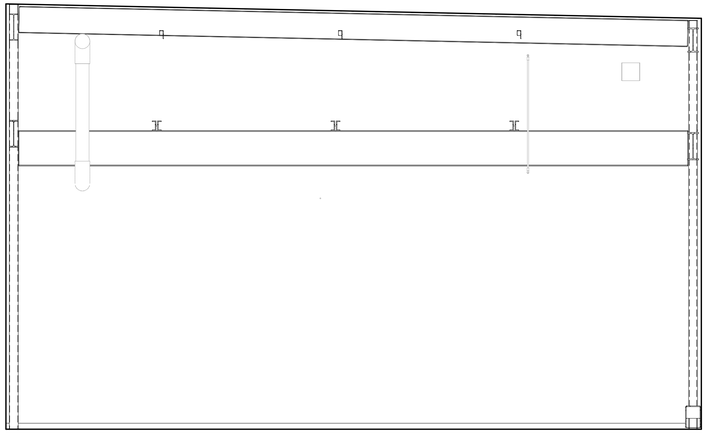

2 130 GAS WORKER LAB - E
1/4" = 1'-0"

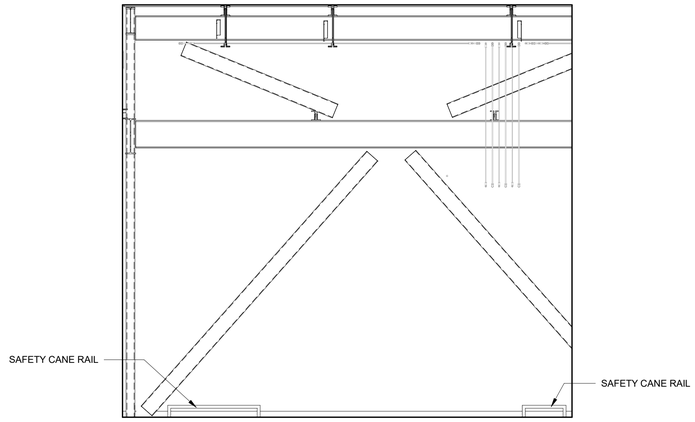

3 130 GAS WORKER LAB - S
1/4" = 1'-0"

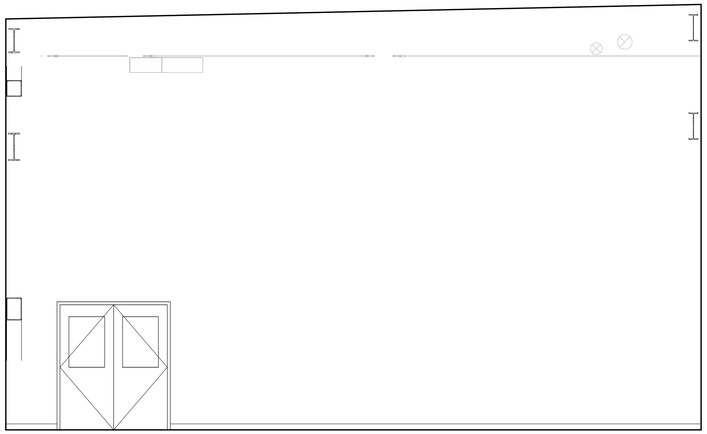

4 130 GAS WORKER LAB - W
1/4" = 1'-0"

City of Puyallup
Development & Permitting Services
ISSUED PERMIT
Building | Planning
Engineering | Public Works
Fire | Traffic

100% CD SET

REV	ISSUED FOR	DATE

NORTH. PLAN.

SCALE.
As indicated

PSE OPERATIONAL TRAINING CENTER

INTERIOR ELEVATIONS

PROJECT#.			202202.06
DRAWN.	DL	CHECK.	SD
ISSUED.			01/26/24

A6.14

202202.06
Autodesk Docs://7222 - 5111 - PSE North Bend Precon Design/PSE-OTC_Current.rvt

1/26/2024 2:16:45 PM

PRCNC20240216

ZERVAS
209 PROSPECT STREET - BELLINGHAM, WA 98225
p.360.734.4744 - zervasgroup.com

9587 REGISTERED ARCHITECT
ANDREW J. KRZYSIEK
STATE OF WASHINGTON

FINISH NOTES

IF NO FINISH CALLOUT IS PRESENT REFER TO NOTES ON SHEET A5.01 FOR SCHEDULED FINISHES.

City of Puyallup
Development & Permitting Services
ISSUED PERMIT
Building | Planning | Engineering | Public Works | Fire | Traffic

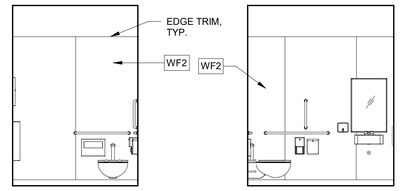

1 131 TOILET - N
1/4" = 1'-0"

2 131 TOILET - E
1/4" = 1'-0"

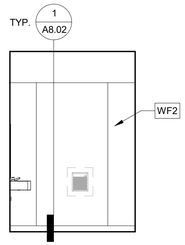

3 131 TOILET - S
1/4" = 1'-0"

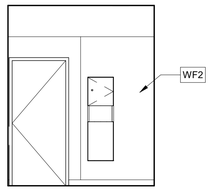

4 131 TOILET - W
1/4" = 1'-0"

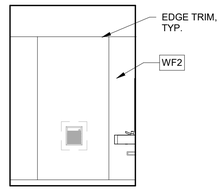

5 132 TOILET - N
1/4" = 1'-0"

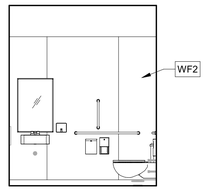

6 132 TOILET - E
1/4" = 1'-0"

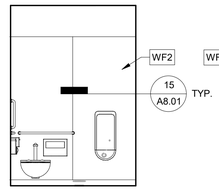

7 132 TOILET - S
1/4" = 1'-0"

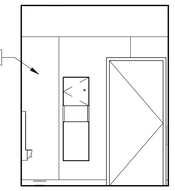

8 132 TOILET - W
1/4" = 1'-0"

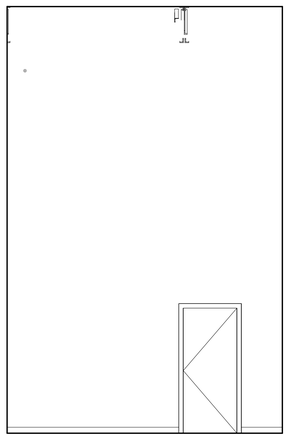

9 133 VESTIBULE - N
1/4" = 1'-0"

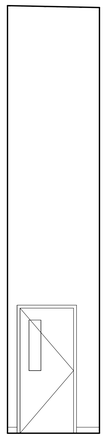

10 133 VESTIBULE - E
1/4" = 1'-0"

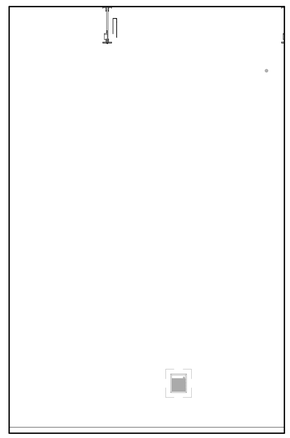

11 133 VESTIBULE - S
1/4" = 1'-0"

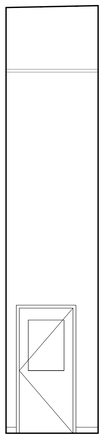

12 133 VESTIBULE - W
1/4" = 1'-0"

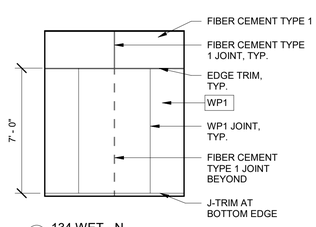

13 134 WET - N
1/4" = 1'-0"

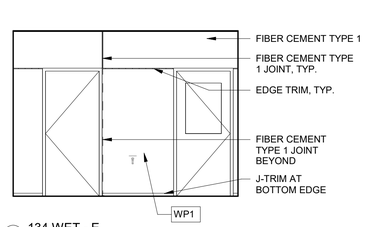

14 134 WET - E
1/4" = 1'-0"

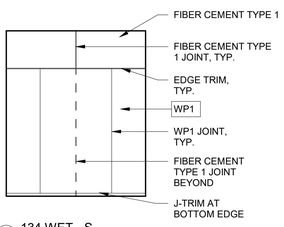

15 134 WET - S
1/4" = 1'-0"

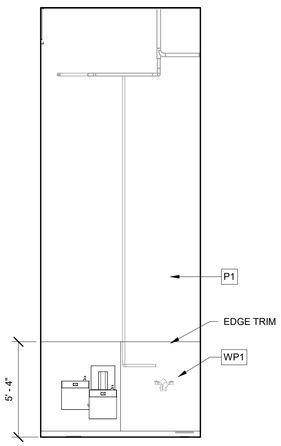

16 135 ICE - N
1/4" = 1'-0"

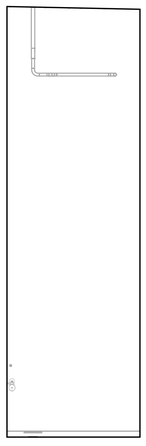

17 135 ICE - E
1/4" = 1'-0"

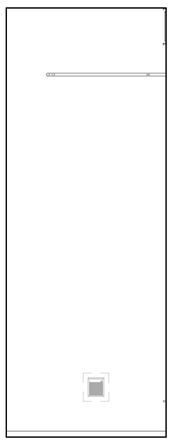

18 135 ICE - S
1/4" = 1'-0"

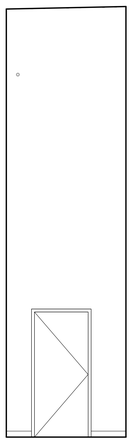

19 135 ICE - W
1/4" = 1'-0"

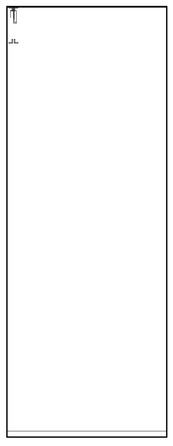

20 136 ELECTRICAL - N
1/4" = 1'-0"

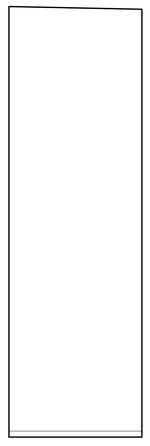

21 136 ELECTRICAL - E
1/4" = 1'-0"

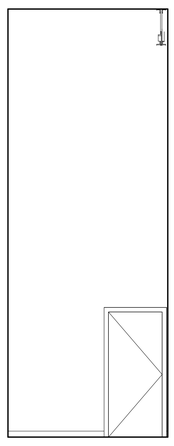

22 136 ELECTRICAL - S
1/4" = 1'-0"

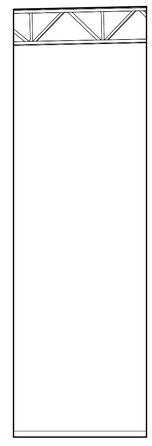

23 136 ELECTRICAL - W
1/4" = 1'-0"

100% CD SET

REV	ISSUED FOR	DATE

NORTH. PLAN.

SCALE.
As indicated

PSE
OPERATIONAL
TRAINING
CENTER

INTERIOR
ELEVATIONS

PROJECT#.			202202.06
DRAWN.	DL	CHECK.	SD
ISSUED.			01/26/24

A6.15

1/26/2024 2:16:46 PM

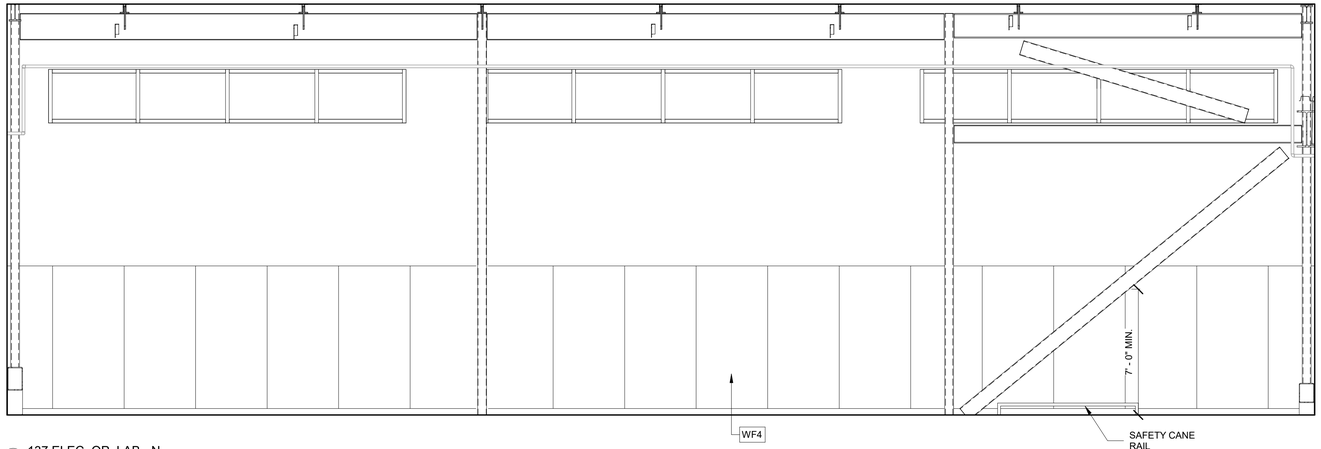

1 137 ELEC. OP. LAB - N
1/4" = 1'-0"

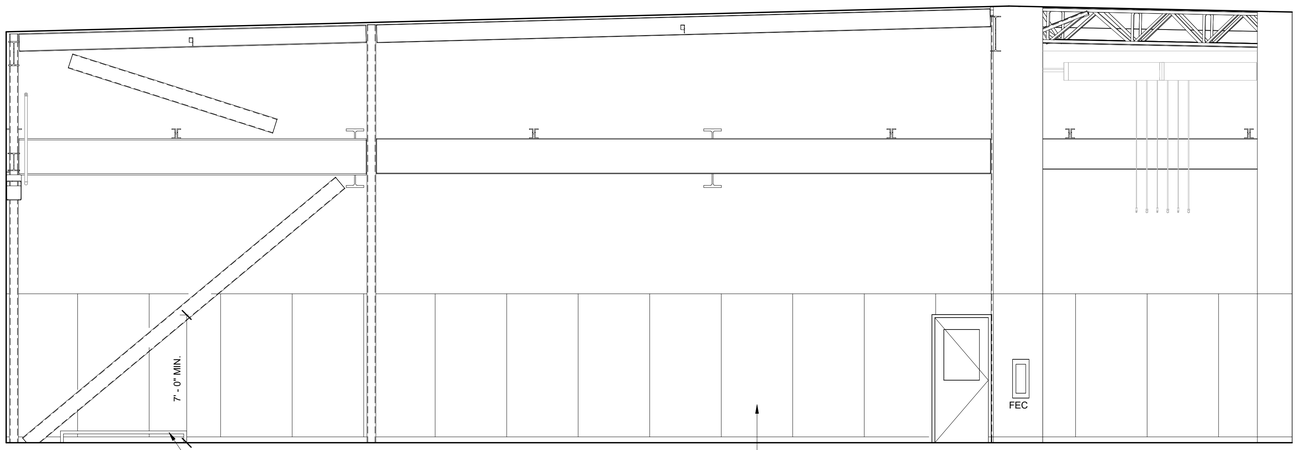

2 137 ELEC. OP. LAB - E
1/4" = 1'-0"

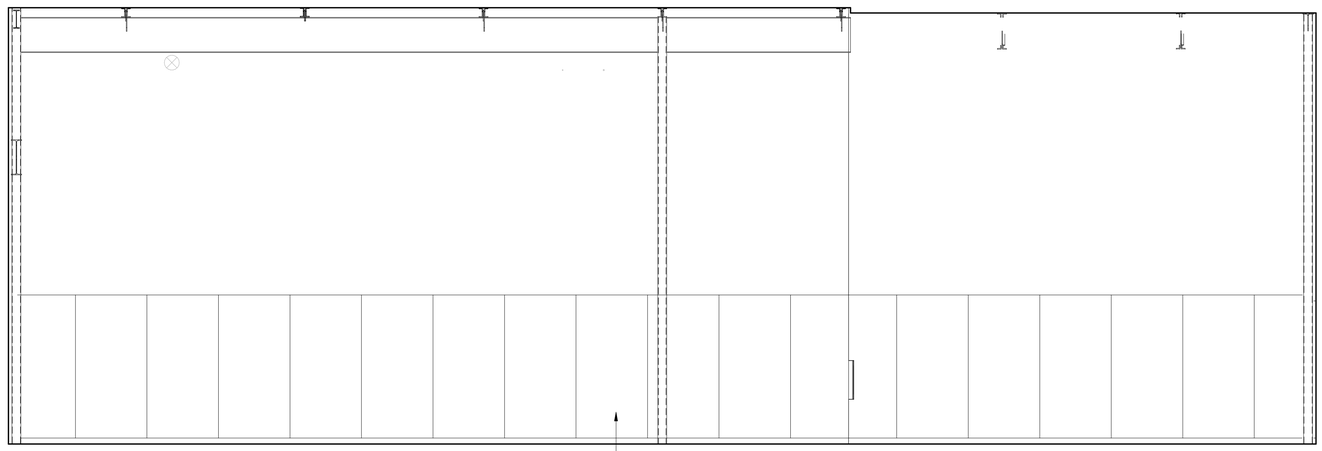

3 137 ELEC. OP. LAB - S
1/4" = 1'-0"

FINISH NOTES

IF NO FINISH CALLOUT IS PRESENT REFER TO NOTES ON SHEET A5.01 FOR SCHEDULED FINISHES.

PRCNC20240216

ZERVAS
209 PROSPECT STREET - BELLINGHAM, WA 98225
p.360.734.4744 - zervasgroup.com

9587 REGISTERED ARCHITECT
ANDREW J. KRZYSIEK
STATE OF WASHINGTON

City of Puyallup
Development & Permitting Services
ISSUED PERMIT

Building	Planning
Engineering	Public Works
Fire	Traffic

100% CD SET

REV.	ISSUED FOR	DATE
2	Redlines	Date 2

NORTH. PLAN.

SCALE.
As indicated

PSE
OPERATIONAL
TRAINING
CENTER

INTERIOR
ELEVATIONS

PROJECT#.			202202.06
DRAWN.	DL	CHECK.	SD
ISSUED.			01/26/24

A6.16

202202.06
Autodesk Docs://7222 - 5111 - PSE North Bend Precon Design/PSE-OTC_Current.rvt

1/26/2024 2:16:48 PM

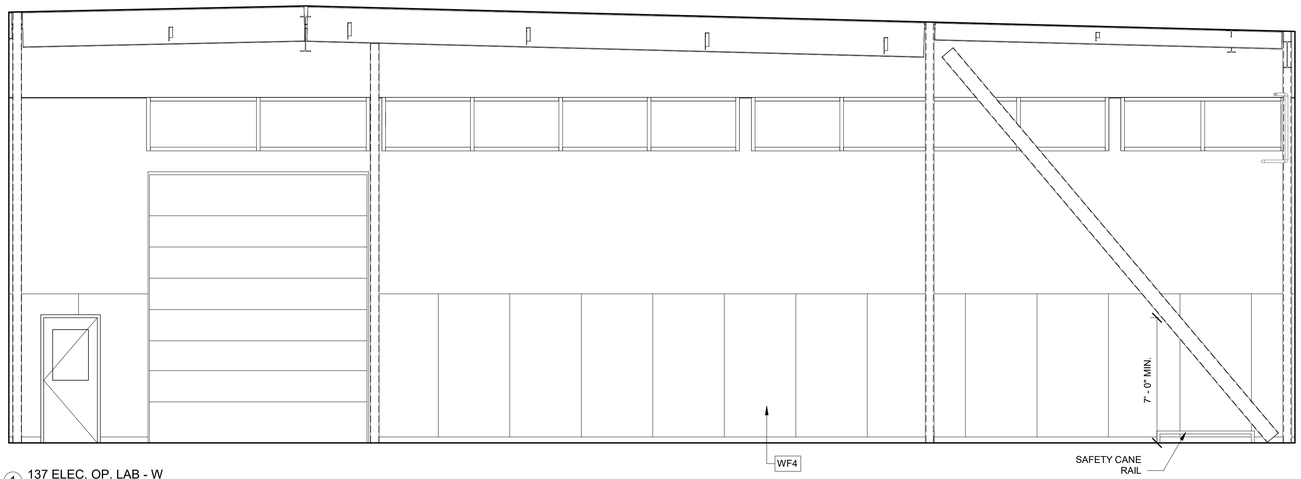

1 137 ELEC. OP. LAB - W
1/4" = 1'-0"

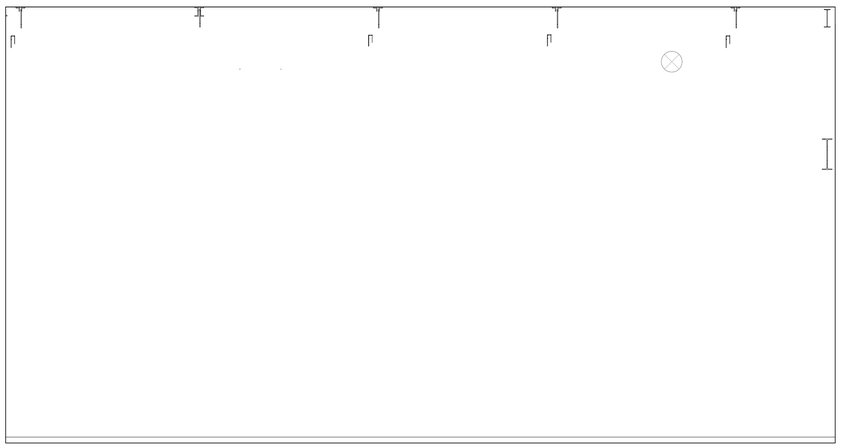

2 138 WAREHOUSE - N
1/4" = 1'-0"

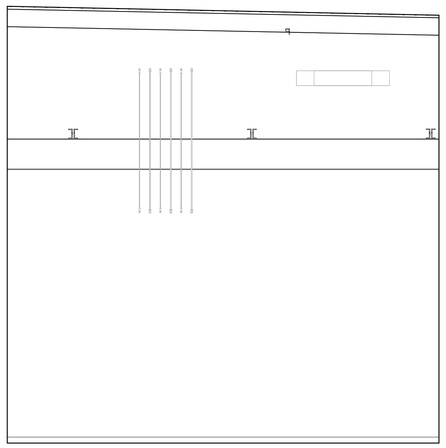

3 138 WAREHOUSE - E
1/4" = 1'-0"

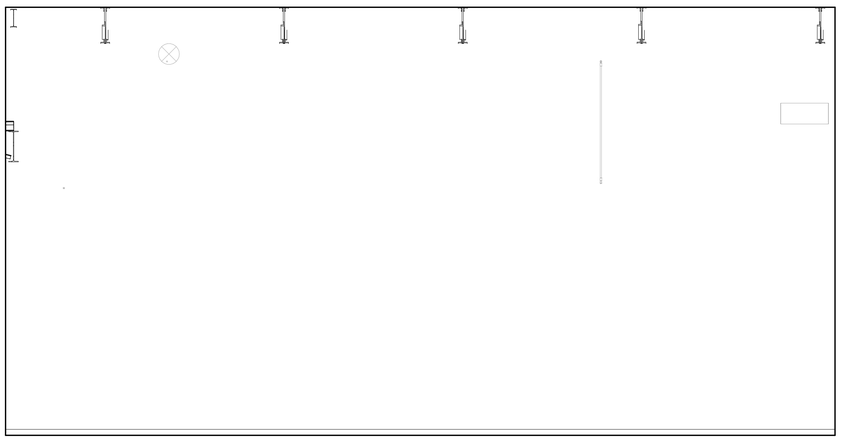

4 138 WAREHOUSE - S
1/4" = 1'-0"

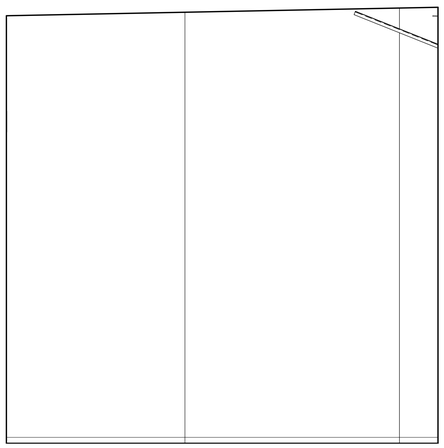

5 138 WAREHOUSE - W
1/4" = 1'-0"

FINISH NOTES

IF NO FINISH CALLOUT IS PRESENT REFER TO NOTES ON SHEET A5.01 FOR SCHEDULED FINISHES.

PRCNC20240216

ZERVAS
209 PROSPECT STREET - BELLINGHAM, WA 98225
p.360.734.4744 - zervasgroup.com

9587 REGISTERED ARCHITECT
ANDREW J. KRZYSIEK
STATE OF WASHINGTON

City of Puyallup
Development & Permitting Services
ISSUED PERMIT
Building | Planning
Engineering | Public Works
Fire | Traffic

100% CD SET

REV	ISSUED FOR	DATE
2	Redlines	Date 2

NORTH. PLAN.

SCALE.
As indicated

PSE
OPERATIONAL
TRAINING
CENTER

INTERIOR
ELEVATIONS

PROJECT#.			202202.06
DRAWN.	DL	CHECK.	SD
ISSUED.			01/26/24

A6.17

202202.06
Autodesk Docs://7222 - 5111 - PSE North Bend Precon Design/PSE-OTC_Current.rvt

1/26/2024 2:16:51 PM

PRCNC20240216

ZERVAS
209 PROSPECT STREET - BELLINGHAM, WA 98225
p.360.734.4744 - zervasgroup.com

9587 REGISTERED ARCHITECT
ANDREW J. KRZYSIEK
STATE OF WASHINGTON

FINISH NOTES

IF NO FINISH CALLOUT IS PRESENT REFER TO NOTES ON SHEET A5.01 FOR SCHEDULED FINISHES.

City of Puyallup
Development & Permitting Services
ISSUED PERMIT
Building | Planning
Engineering | Public Works
Fire | Traffic

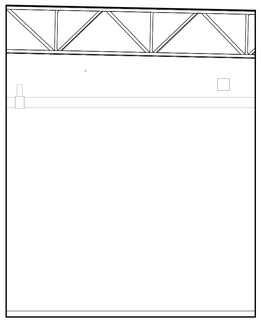

1 139 STORAGE - N
1/4" = 1'-0"

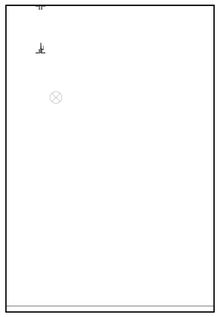

2 139 STORAGE - E
1/4" = 1'-0"

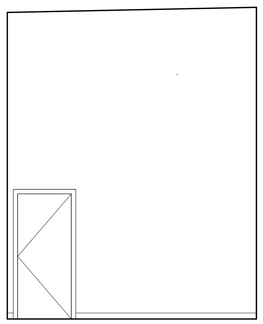

3 139 STORAGE - S
1/4" = 1'-0"

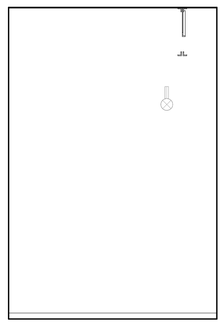

4 139 STORAGE - W
1/4" = 1'-0"

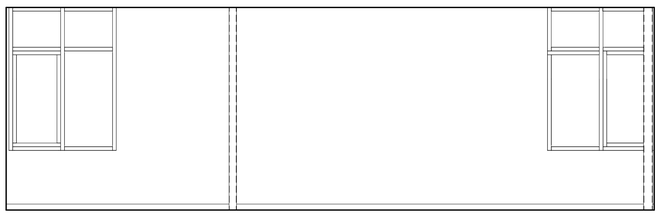

5 140,142,143 CLASSROOM - N
1/4" = 1'-0"

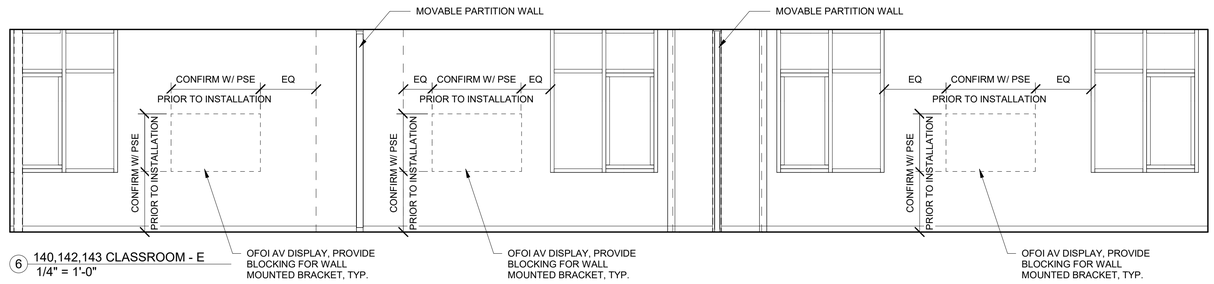

6 140,142,143 CLASSROOM - E
1/4" = 1'-0"

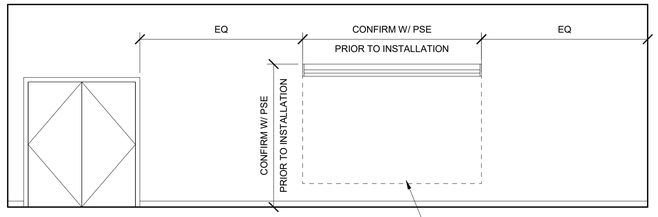

7 140,142,143 CLASSROOM - S
1/4" = 1'-0"

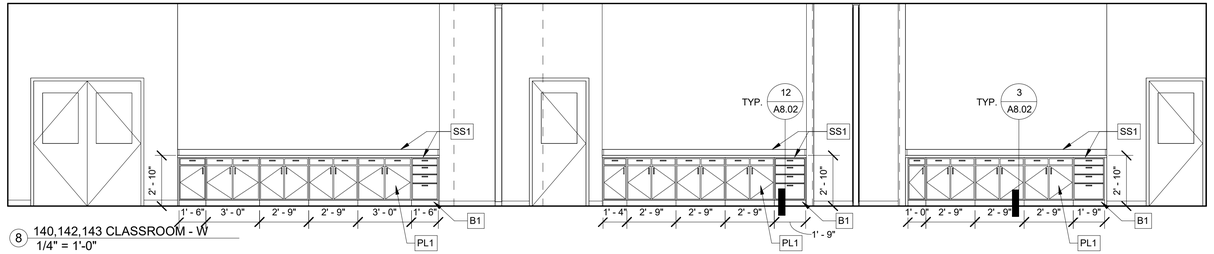

8 140,142,143 CLASSROOM - W
1/4" = 1'-0"

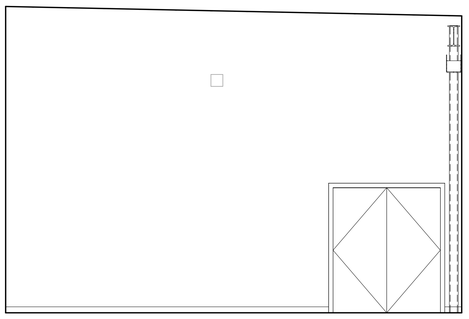

9 141 STORAGE - N
1/4" = 1'-0"

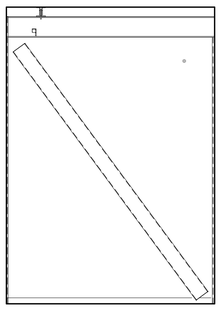

10 141 STORAGE - E
1/4" = 1'-0"

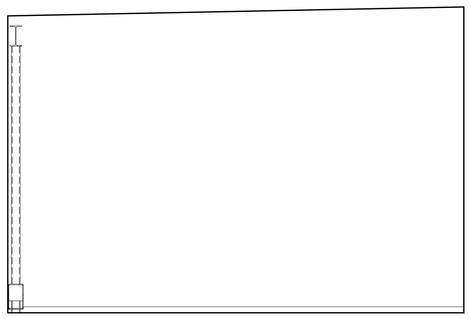

11 141 STORAGE - S
1/4" = 1'-0"

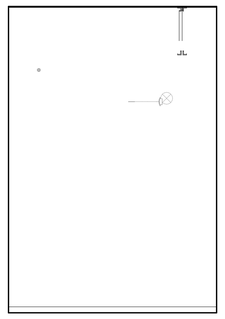

12 141 STORAGE - W
1/4" = 1'-0"

100% CD SET

REV	ISSUED FOR	DATE
2	Redlines	Date 2

NORTH. PLAN.

SCALE.
As indicated

PSE
OPERATIONAL
TRAINING
CENTER

INTERIOR
ELEVATIONS

PROJECT#.	202202.06
DRAWN.	DL
CHECK.	SD
ISSUED.	01/26/24

A6.18

202202.06
Autodesk Docs://7222 - 5111 - PSE North Bend Precon Design/PSE-OTC_Current.rvt

1/26/2024 2:16:54 PM

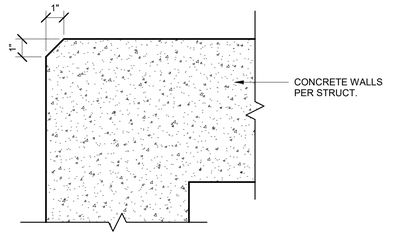

1 OUTSIDE CORNER @ CAST IN PLACE CONCRETE
3" = 1'-0"

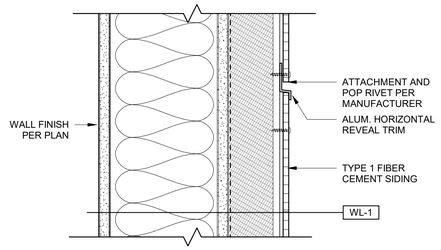

5 TYPE 1 FIBER CEMENT HORIZONTAL JOINT
3" = 1'-0"

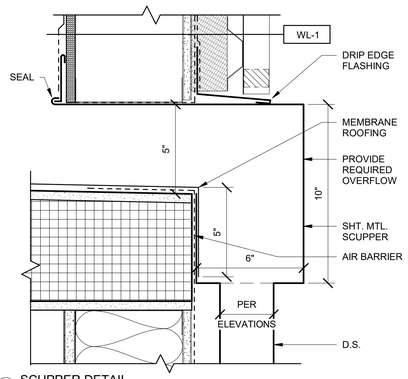

9 SCUPPER DETAIL
3" = 1'-0"

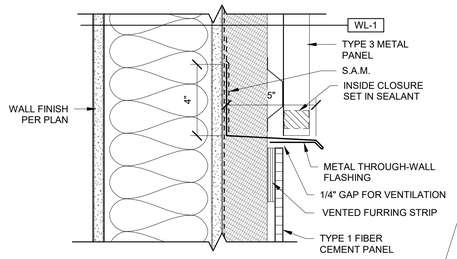

13 VERTICAL TRANSITION @ TYPE 1 AND TYPE 3 SIDING
3" = 1'-0"

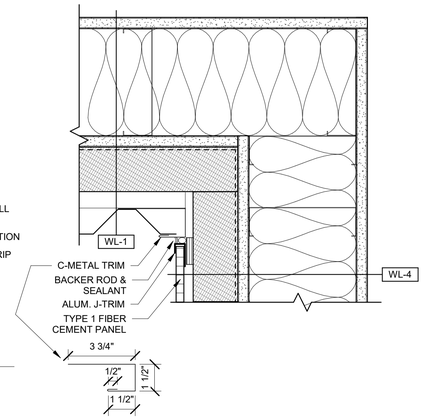

17 INSIDE CORNER @ FIBER CEMENT AND METAL SIDING
3" = 1'-0"

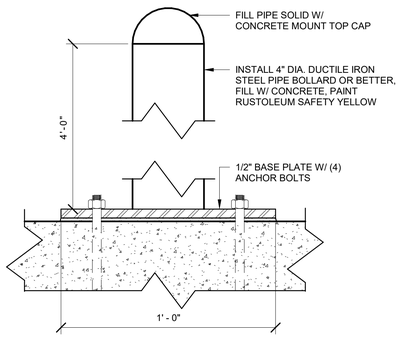

2 FIXED BOLLARD @ BLOCK DETAIL
3" = 1'-0"

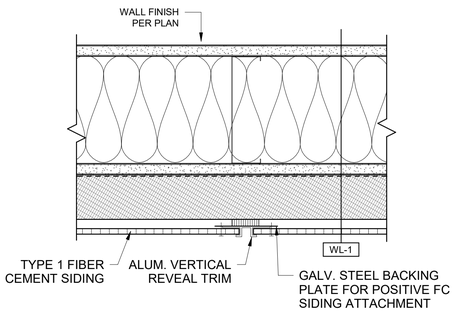

6 TYPE 1 FIBER CEMENT VERTICAL JOINT
3" = 1'-0"

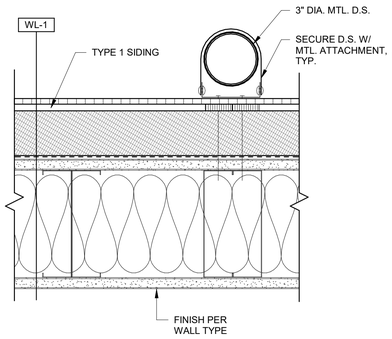

10 DOWNSPOUT @ FIBER CEMENT SIDING
3" = 1'-0"

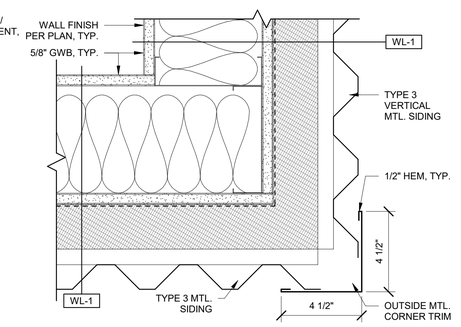

14 OUTSIDE CORNER @ TYPE 3 VERTICAL MTL. SIDING
3" = 1'-0"

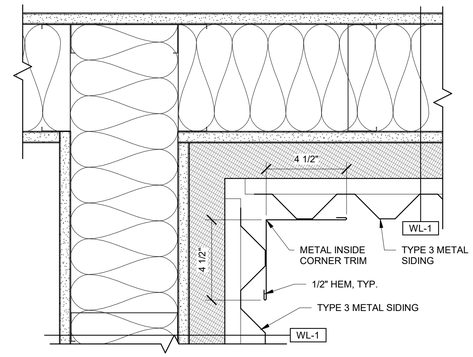

18 INSIDE CORNER @ VERTICAL SIDING TYPE 3
3" = 1'-0"

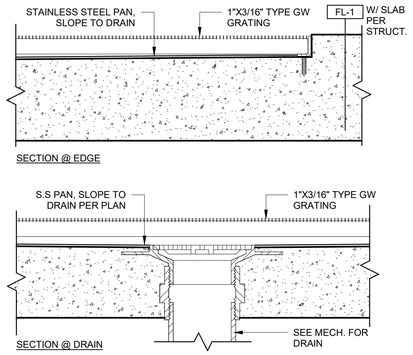

3 REMOVABLE BAR GRATE DETAIL
3" = 1'-0"

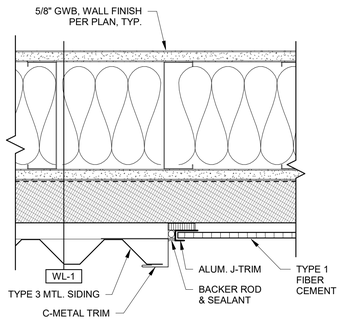

7 TYPE 1 FIBER CEMENT @ TYPE 3 MTL. SIDING
3" = 1'-0"

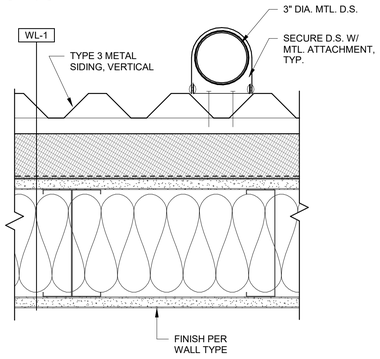

11 DOWNSPOUT @ METAL SIDING
3" = 1'-0"

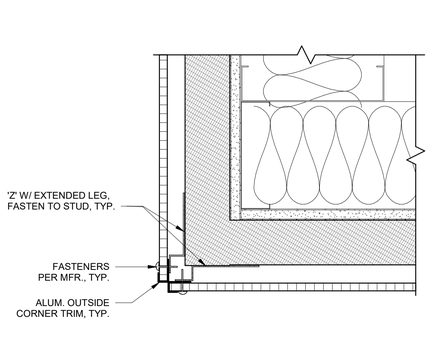

15 CORNER GUARD @ FIBER CEMENT OUTSIDE CORNER
3" = 1'-0"

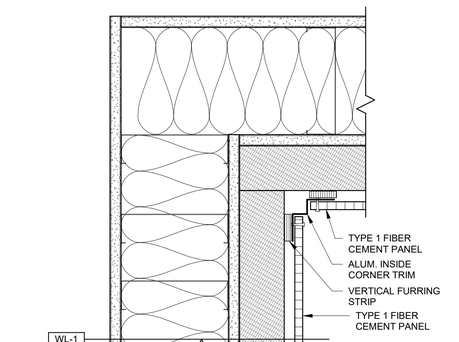

19 TYPE 1 FIBER CEMENT INSIDE CORNER
3" = 1'-0"

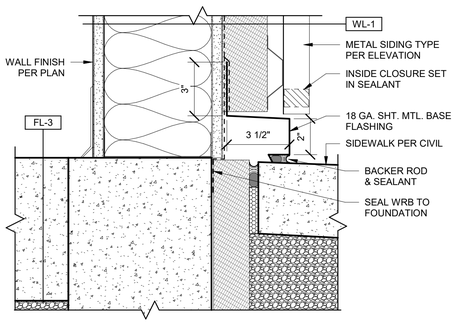

4 MTL. SIDING @ CONCRETE WALL/SLAB
3" = 1'-0"

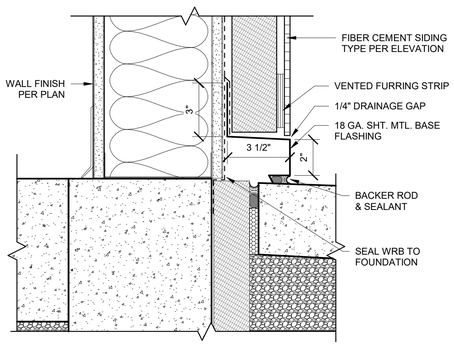

8 FIBER CEMENT BASE @ CONCRETE
3" = 1'-0"

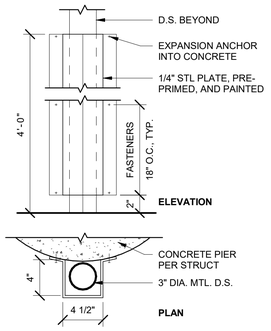

12 DOWNSPOUT @ CONCRETE PIER
1 1/2" = 1'-0"

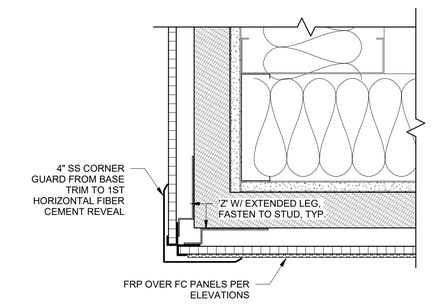

16 CORNER GUARD @ FIBER CEMENT OUTSIDE CORNER
3" = 1'-0"

PRCNC20240216

ZERVAS
209 PROSPECT STREET - BELLINGHAM, WA 98225
p.360.734.4744 - zervasgroup.com
9587 REGISTERED ARCHITECT
ANDREW J. KRZYSIEK
STATE OF WASHINGTON

City of Puyallup
Development & Permitting Services
ISSUED PERMIT
Building | Planning
Engineering | Public Works
Fire | Traffic

100% CD SET

REV	ISSUED FOR	DATE

NORTH. PLAN.

SCALE.
As indicated

PSE OPERATIONAL TRAINING CENTER

EXTERIOR DETAILS

PROJECT#.	202202.06
DRAWN. MR	CHECK. AK
ISSUED.	01/26/24

A7.01

202202.06
Autodesk Docs://7222 - 5111 - PSE North Bend Precon Design/PSE-OTC_Current.rvt

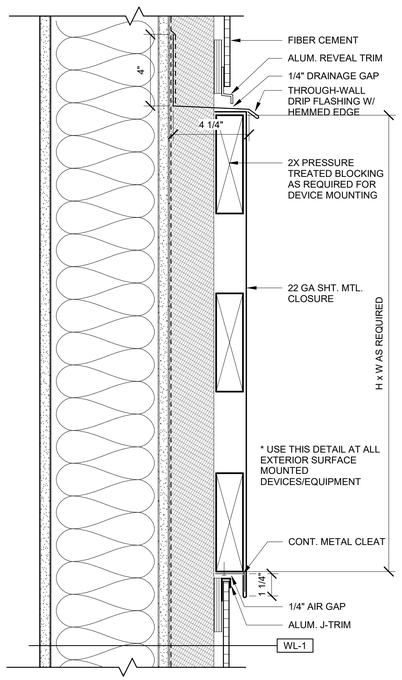

1 TYPICAL MOUNTING BLOCK @ FIBER CEMENT
3" = 1'-0"

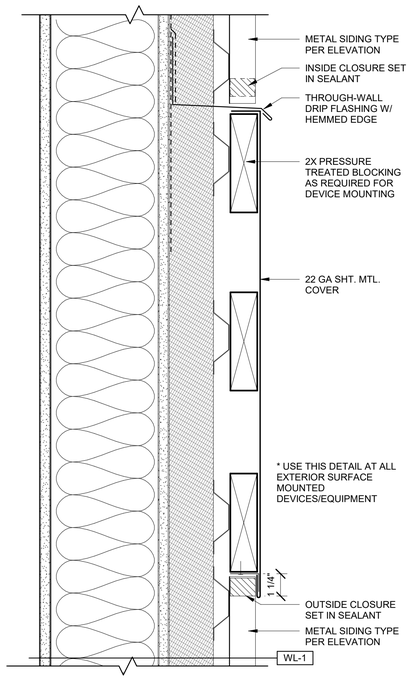

2 TYPICAL MOUNTING BLOCK @ MTL PANEL
3" = 1'-0"

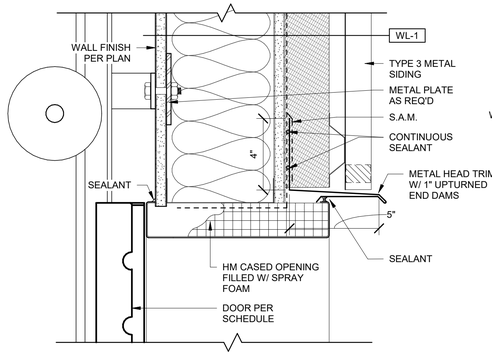

3 OVERHEAD DOOR HEAD @ TYPE 3 VERTICAL SIDING
3" = 1'-0"

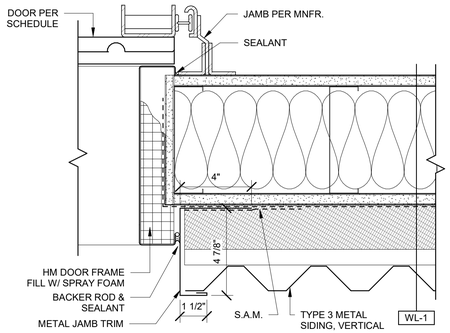

4 OVERHEAD DOOR JAMB @ TYPE 3 VERTICAL SIDING
3" = 1'-0"

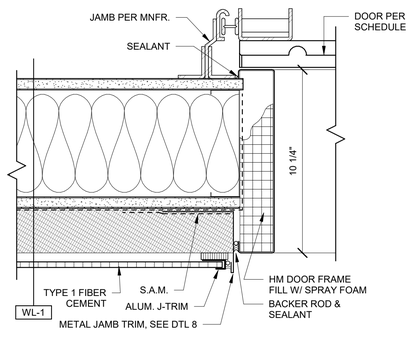

5 OVERHEAD DOOR JAMB @ TYPE 1 SIDING
3" = 1'-0"

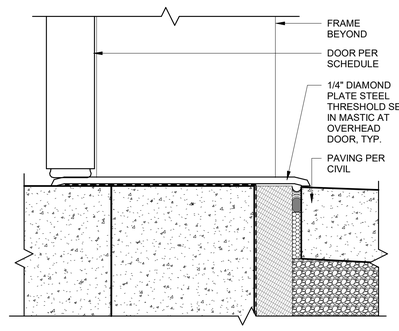

6 OVERHEAD DOOR SILL @ GRADE
3" = 1'-0"

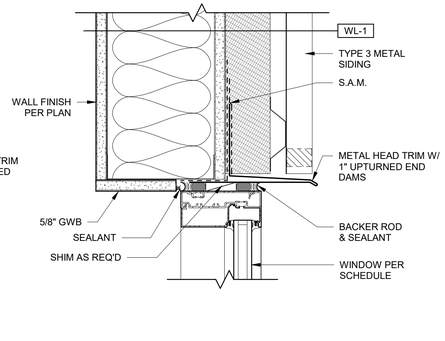

7 STOREFRONT HEAD @ TYPE 3 VERTICAL MTL. SIDING
3" = 1'-0"

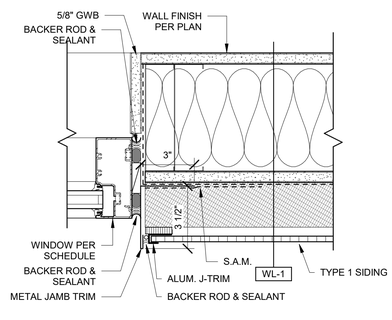

8 STOREFRONT JAMB @ TYPE 1 SIDING
3" = 1'-0"

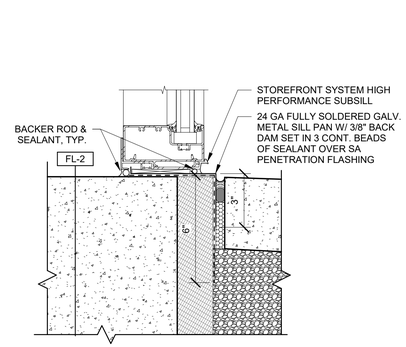

9 STOREFRONT SILL @ SLAB
3" = 1'-0"

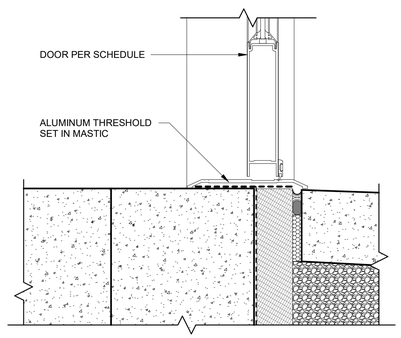

10 STOREFRONT DOOR SILL
3" = 1'-0"

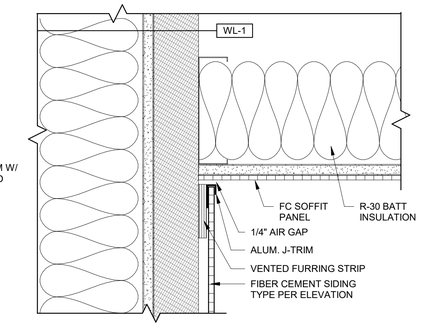

11 SOFFIT TRANSITION @ EAST WET ROOM WALL
3" = 1'-0"

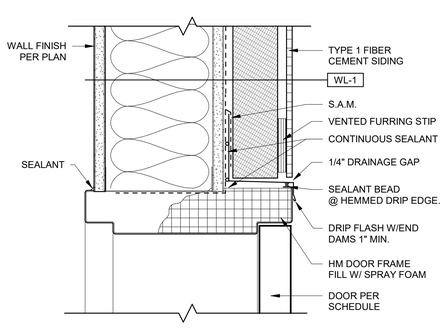

12 HM DOOR HEAD @ TYPE 1 FIBER CEMENT SIDING
3" = 1'-0"

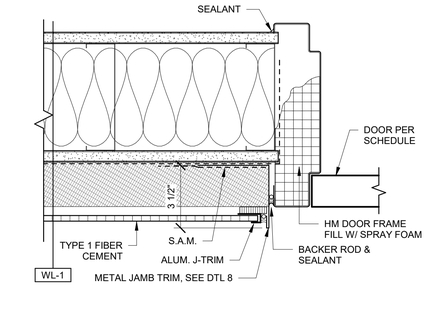

13 HM DOOR JAMB @ TYPE 1 SIDING
3" = 1'-0"

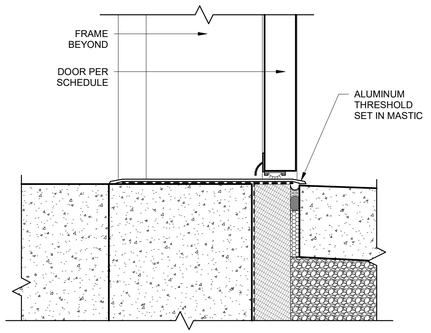

14 HM DOOR SILL @ GRADE
3" = 1'-0"

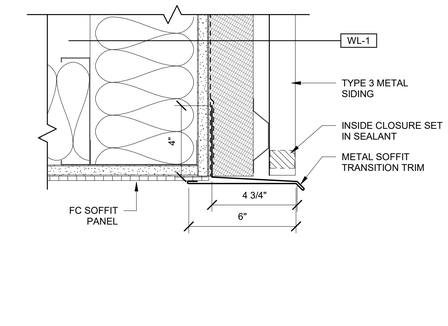

15 SOFFIT TRANSITION @ WET ROOM HEAD WALL
3" = 1'-0"

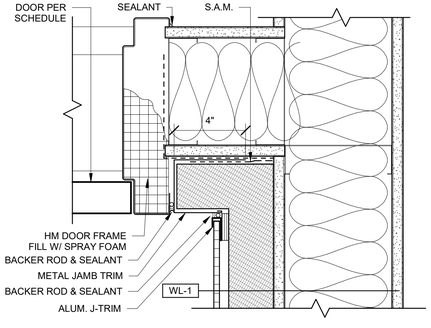

16 HM DOOR JAMB @ TYPE 1 FC INSIDE CORNER
3" = 1'-0"

PRCNC20240216

ZERVAS
209 PROSPECT STREET - BELLINGHAM, WA 98225
p.360.734.4744 - zervasgroup.com
9587 REGISTERED ARCHITECT
ANDREW J. KRZYSIEK
STATE OF WASHINGTON

City of Puyallup
Development & Permitting Services
ISSUED PERMIT
Building | Planning | Engineering | Public Works | Fire | Traffic

100% CD SET

REV	ISSUED FOR	DATE

NORTH. PLAN.

SCALE.
3" = 1'-0"

PSE OPERATIONAL TRAINING CENTER

EXTERIOR DETAILS

PROJECT#			202202.06
DRAWN.	MR	CHECK.	AK
ISSUED.			01/26/24

A7.02

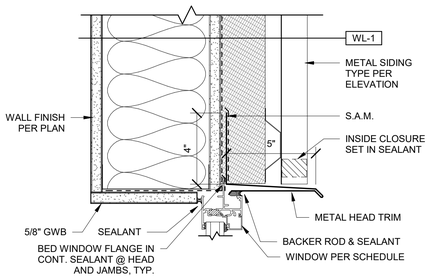

1 WINDOW HEAD @ MTL. SIDING
3" = 1'-0"

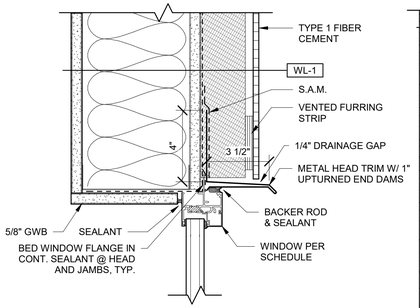

5 WINDOW HEAD @ TYPE 1 FIBER CEMENT
3" = 1'-0"

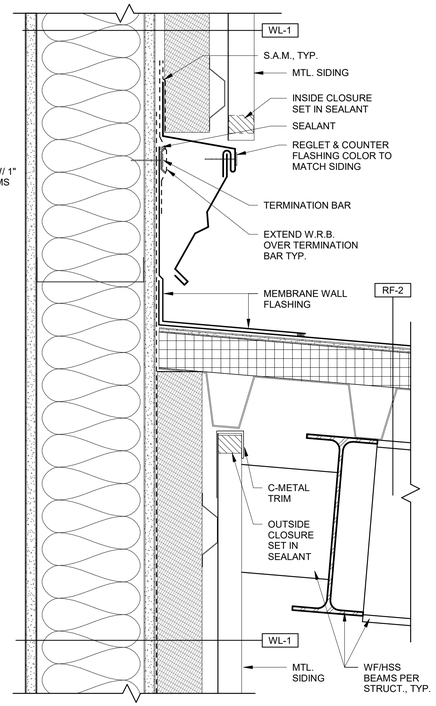

9 ENTRY CANOPY @ RF-2 HEADWALL
3" = 1'-0"

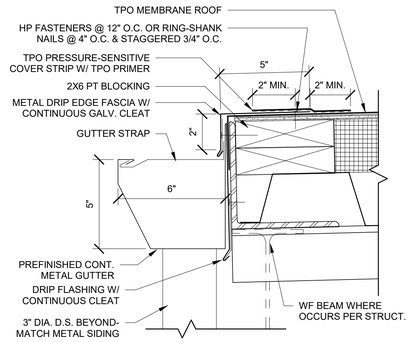

11 GUTTER @ COVERED AREA ROOF
3" = 1'-0"

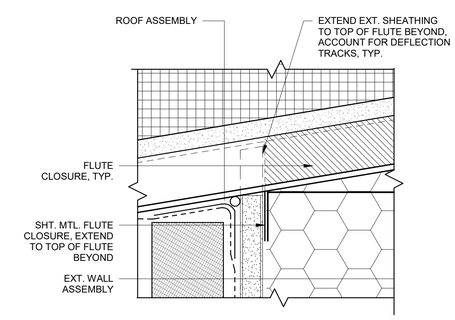

13 DECK FLUTE CLOSURE PERPENDICULAR TO EXT. WALL
6" = 1'-0"

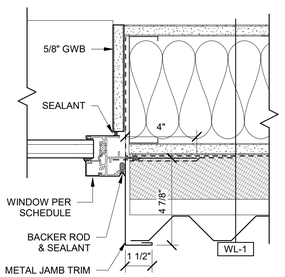

2 WINDOW JAMB @ MTL. SIDING
3" = 1'-0"

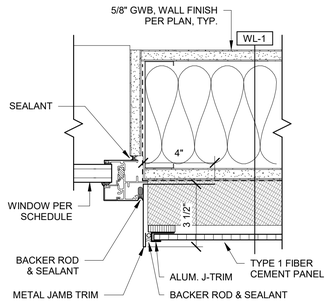

6 WINDOW JAMB @ FIBER CEMENT
3" = 1'-0"

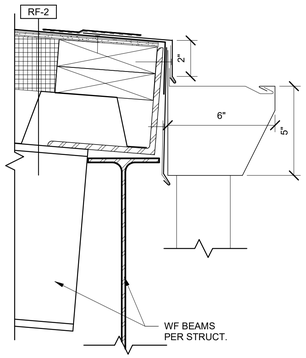

12 GUTTER @ ENTRY CANOPY EAVE
3" = 1'-0"

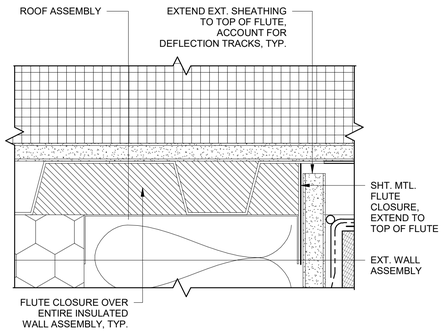

14 DECT FLUTE CLOSURE PARALELL TO EXT. WALL
6" = 1'-0"

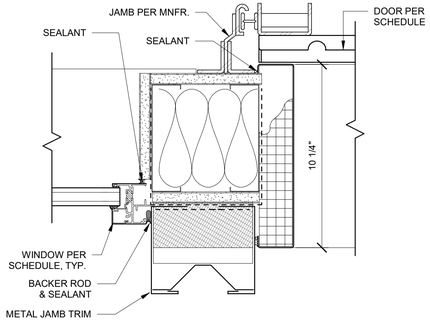

3 WINDOW JAMB @ OVERHEAD DOOR
3" = 1'-0"

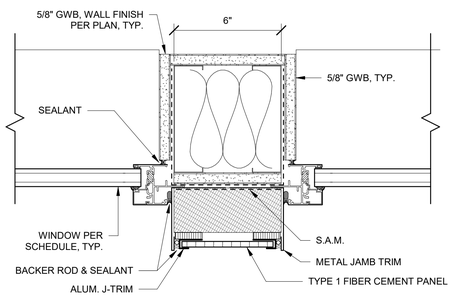

7 WINDOW JAMBS
3" = 1'-0"

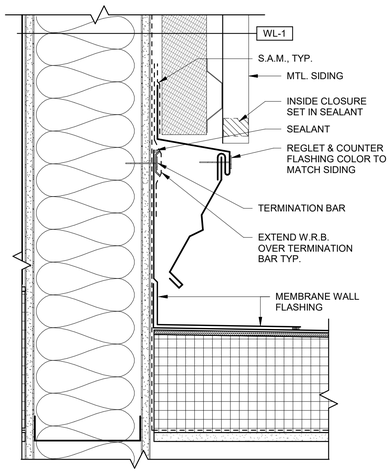

10 MEMBRANE ROOF @ HEADWALL
3" = 1'-0"

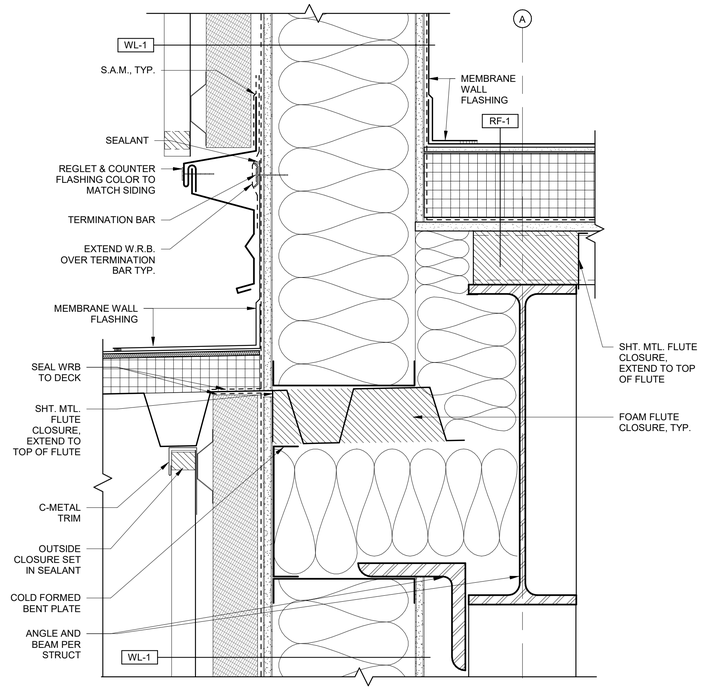

15 COVERED AREA ROOF @ HEADWALL
3" = 1'-0"

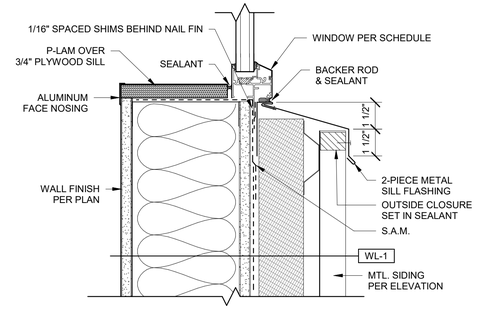

4 WINDOW SILL @ MTL. SIDING
3" = 1'-0"

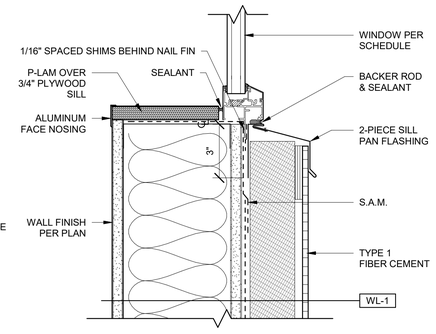

8 WINDOW SILL @ TYPE 1 FIBER CEMENT
3" = 1'-0"

ZERVAS
209 PROSPECT STREET - BELLINGHAM, WA 98225
p.360.734.4744 - zervasgroup.com
9587 REGISTERED ARCHITECT
ANDREW J. KRZYSIEK
STATE OF WASHINGTON

PRCNC20240216

City of Puyallup
Development & Permitting Services
ISSUED PERMIT
Building | Planning
Engineering | Public Works
Fire | Traffic

100% CD SET

REV	ISSUED FOR	DATE

NORTH. PLAN.

SCALE.
As indicated

PSE OPERATIONAL TRAINING CENTER

EXTERIOR DETAILS

PROJECT#.	202202.06
DRAWN. MR	CHECK. AK
ISSUED.	01/26/24

A7.03

1/26/2024 2:17:01 PM

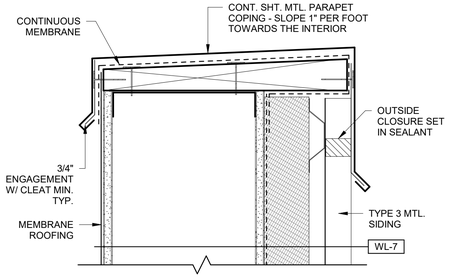

1 TYP. PARAPET CAP
3" = 1'-0"

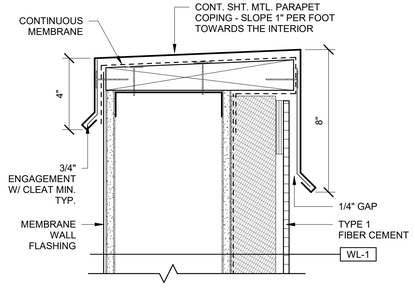

5 PARAPET CAP @ TYPE 1 FIBER CEMENT
3" = 1'-0"

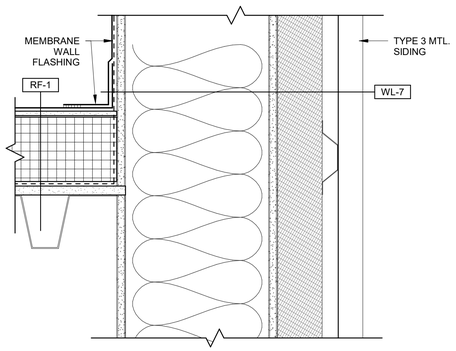

2 PARAPET @ ROOF
3" = 1'-0"

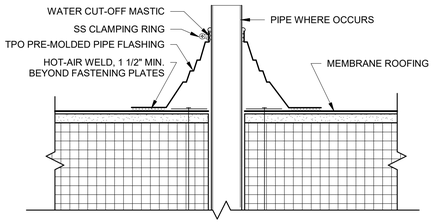

6 PIPE PENETRATION @ TPO ROOF
3" = 1'-0"

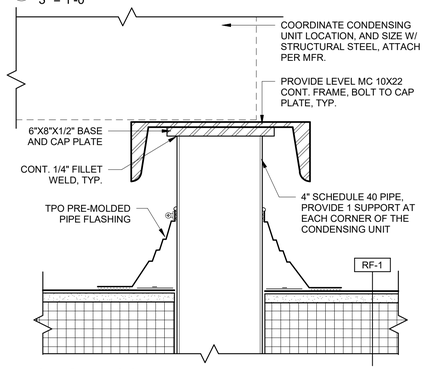

3 CU MOUNTING CURB
3" = 1'-0"

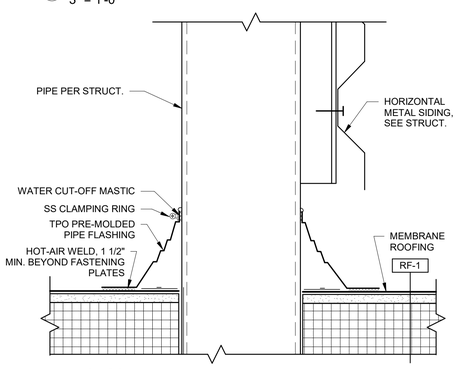

7 MECH SCREEN DETAIL
3" = 1'-0"

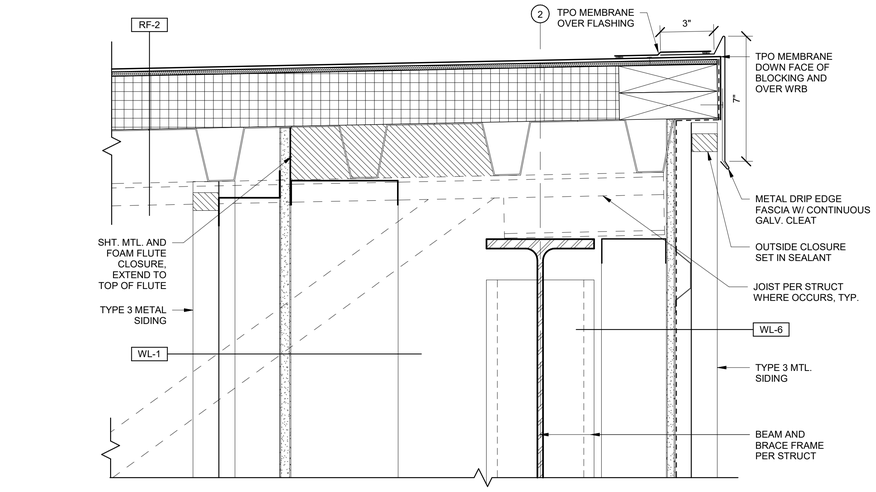

9 BRACE FRAME WALL @ CANOPY ROOF
3" = 1'-0"

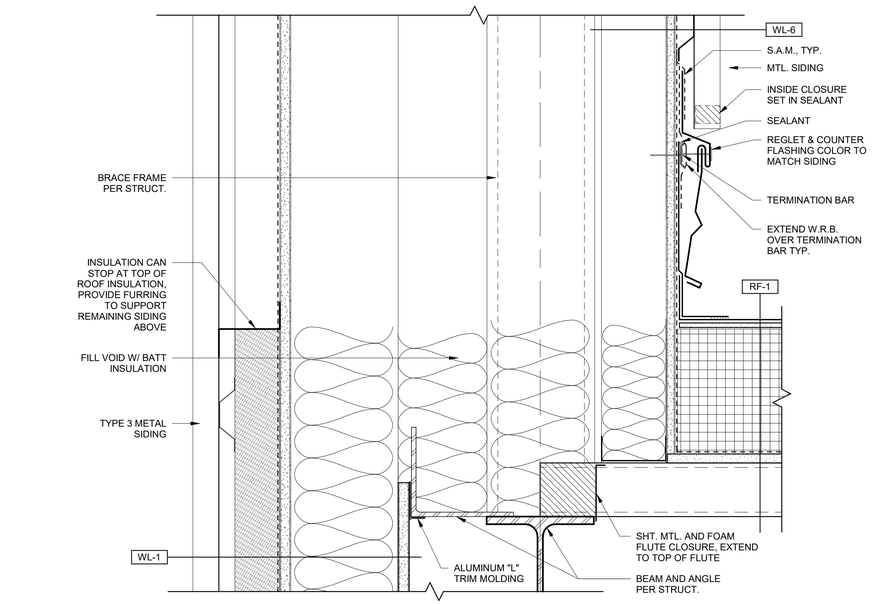

10 BRACE FRAME WALL @ ROOF
3" = 1'-0"

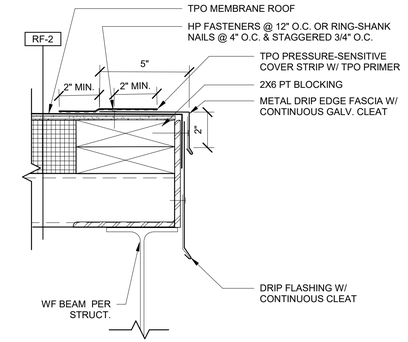

13 COVERED AREA RAKE EDGE
3" = 1'-0"

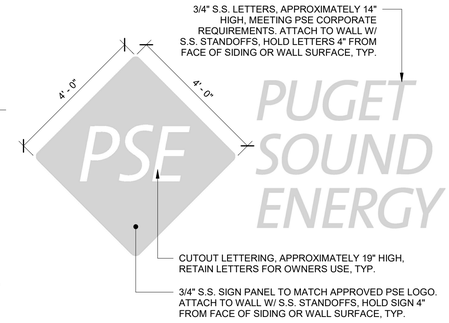

14 EXTERIOR LOGO SIGNAGE DETAIL
1/2" = 1'-0"

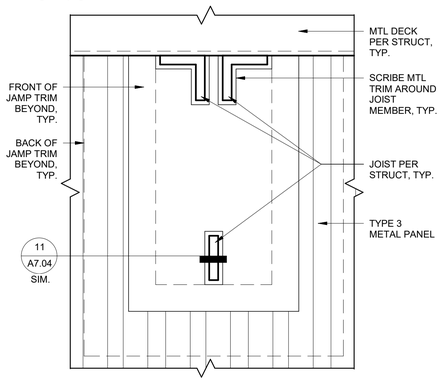

4 JOIST @ MTL SIDING
3" = 1'-0"

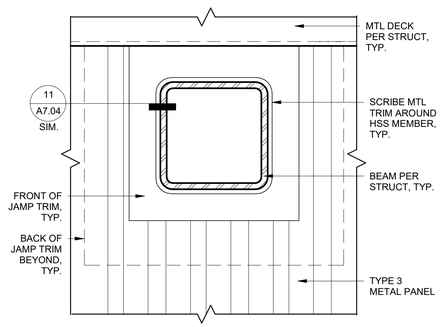

8 BEAM @ MTL SIDING
3" = 1'-0"

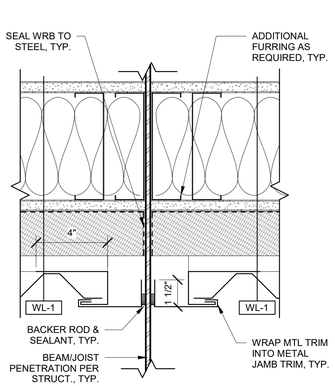

11 MTL TRIM @ BEAM
3" = 1'-0"

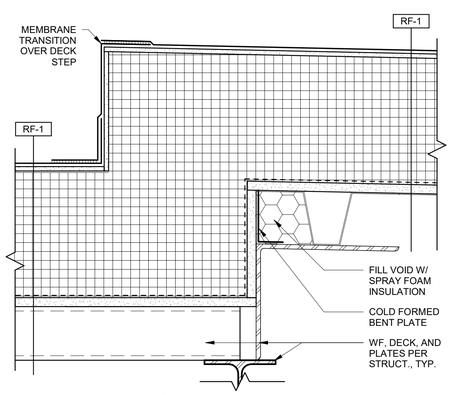

12 MEMBRANE DECK STEP
3" = 1'-0"

ZERVAS
209 PROSPECT STREET - BELLINGHAM, WA 98225
p.360.734.4744 - zervasgroup.com
9587 REGISTERED ARCHITECT
ANDREW J. KRZYSIEK
STATE OF WASHINGTON

PRCNC20240216

City of Puyallup
Development & Permitting Services
ISSUED PERMIT
Building | Planning
Engineering | Public Works
Fire | Traffic

100% CD SET

REV	ISSUED FOR	DATE

NORTH. PLAN.

SCALE.
As indicated

PSE OPERATIONAL TRAINING CENTER

EXTERIOR DETAILS

PROJECT#.	202202.06
DRAWN. MR	CHECK. AK
ISSUED.	01/26/24

A7.04

202202.06
Autodesk Docs://7222 - 5111 - PSE North Bend Precon Design/PSE-OTC_Current.rvt

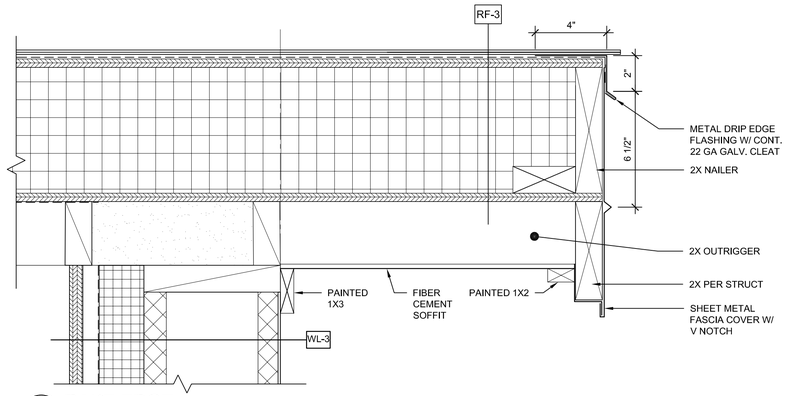

1 RAKE EDGE
SCALE: 3" = 1'-0"

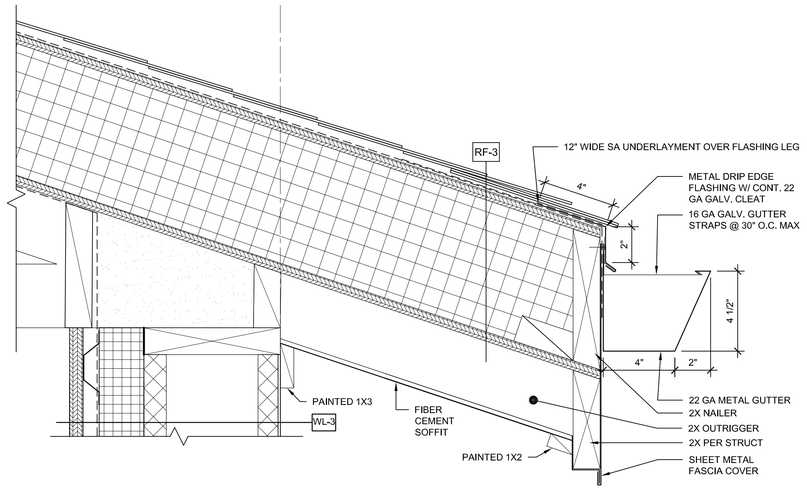

2 EAVE AND GUTTER
SCALE: 3" = 1'-0"

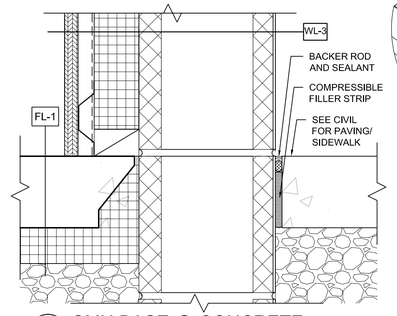

3 CMU BASE @ CONCRETE
SCALE: 3" = 1'-0"

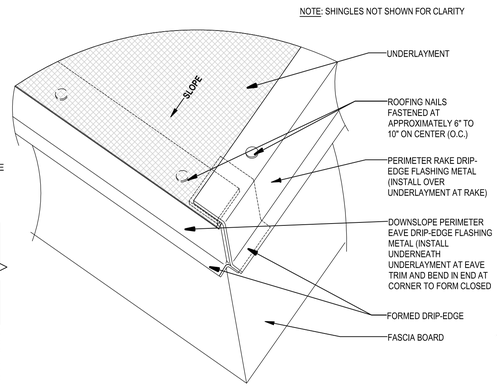

4 TYP. EDGE MTL @ RAKE/EAVE CORNER
SCALE: 1 1/2" = 1'-0"

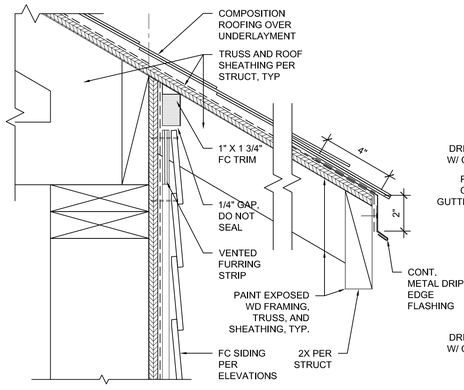

5 EAVE @ LAP SIDING
SCALE: 3" = 1'-0"

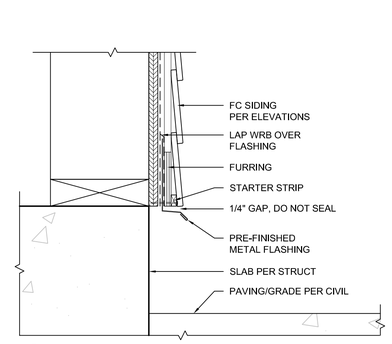

6 LAP SIDING @ COMPRESSOR BASE
SCALE: 3" = 1'-0"

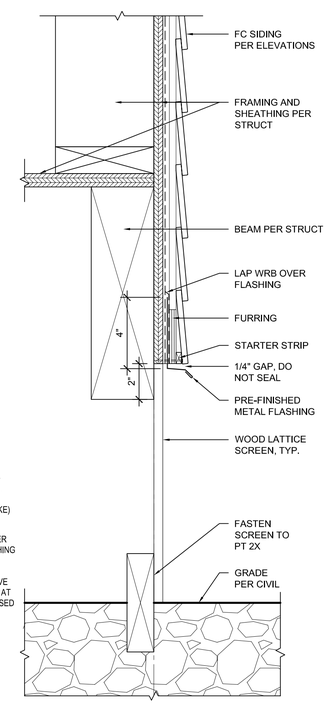

7 VILLAGE/4-PLEX LAP SIDING BASE
SCALE: 3" = 1'-0"

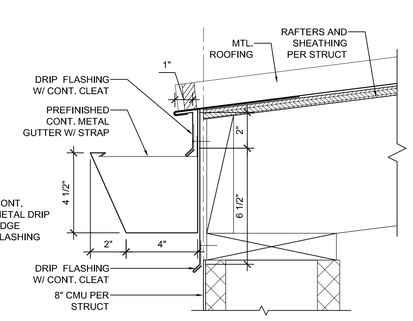

8 LOW EAVE TRASH ENCLOSURE
SCALE: 3" = 1'-0"

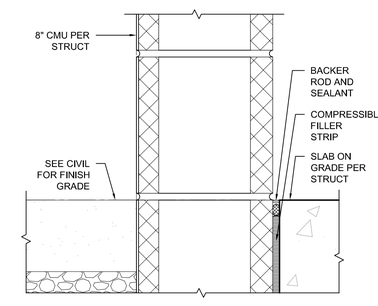

9 TRASH ENCLOSURE BASE
SCALE: 3" = 1'-0"

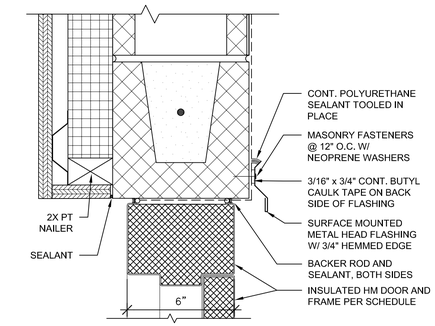

10 HM DOOR HEAD, JAMB SIM.
SCALE: 3" = 1'-0"

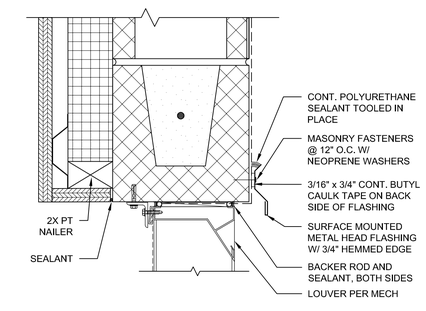

11 LOUVER HEAD, JAMB SIM.
SCALE: 3" = 1'-0"

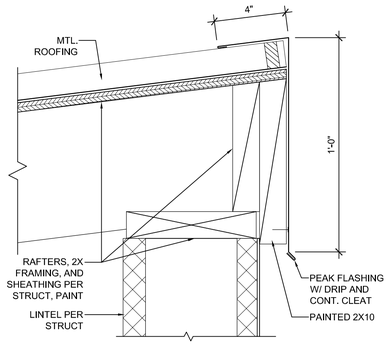

12 HIGH EAVE TRASH ENCLOSURE
SCALE: 3" = 1'-0"

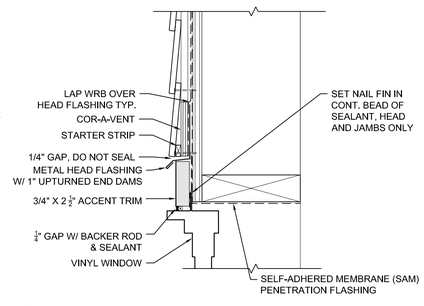

13 TYP. WINDOW HEAD @ LAP SIDING
SCALE: 3" = 1'-0"

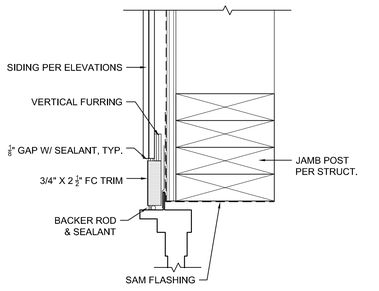

14 TYP. WINDOW JAMB @ LAP SIDING
SCALE: 3" = 1'-0"

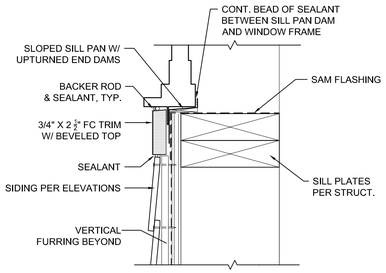

15 TYP. WINDOW SILL @ LAP SIDING
SCALE: 3" = 1'-0"

PRCNC20240216

ZERVAS
ARCHITECTURE | INTERIOR DESIGN
zervasgroup.com
209 Prospect Street
Bellingham, WA 98225
360.734.4744

9587 REGISTERED ARCHITECT
ANDREW J. KRZYSIEK
STATE OF WASHINGTON

City of Puyallup
Development & Permitting Services
ISSUED PERMIT
Building | Planning
Engineering | Public Works
Fire | Traffic

100% CD SET

REV	ISSUED FOR	DATE

PLAN NORTH | TRUE NORTH
SCALE: SEE DWG 0

PSE - OPERATIONAL TRAINING CENTER

EXTERIOR DETAILS - OUTDOOR TRAINING

PROJECT No:	202202.06
DRAWN BY:	MR
CHECKED BY:	AK
DATE ISSUED:	01/26/24

A7.05

© 2023

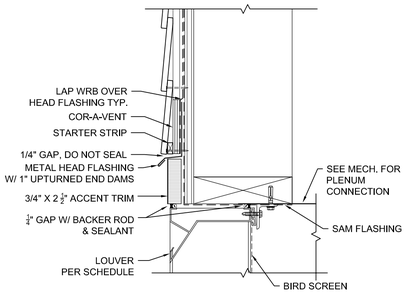

1 TYP. LOUVER HEAD @ LAP SIDING
SCALE: 3" = 1'-0"

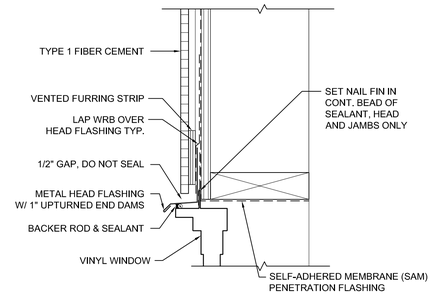

5 TYP. WINDOW HEAD @ TYPE 1 FC
SCALE: 3" = 1'-0"

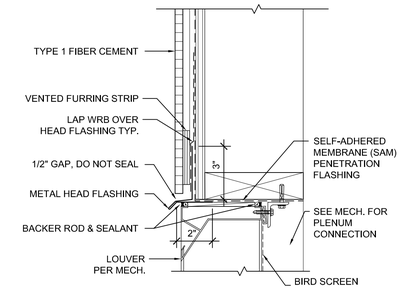

9 TYP. LOUVER HEAD @ TYPE 1 FC
SCALE: 3" = 1'-0"

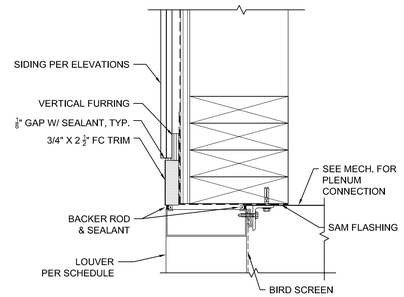

2 TYP. LOUVER JAMB @ LAP SIDING
SCALE: 3" = 1'-0"

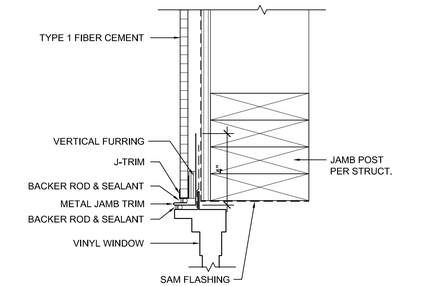

6 TYP. WINDOW JAMB @ TYPE 1 FC
SCALE: 3" = 1'-0"

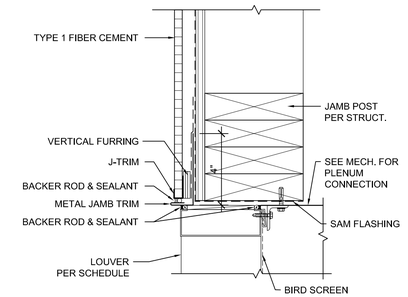

10 TYP. LOUVER JAMB @ TYPE 1 FC
SCALE: 3" = 1'-0"

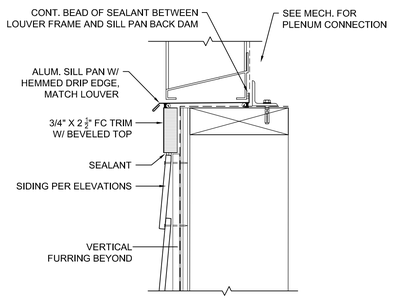

3 TYP. LOUVER SILL @ LAP SIDING
SCALE: 3" = 1'-0"

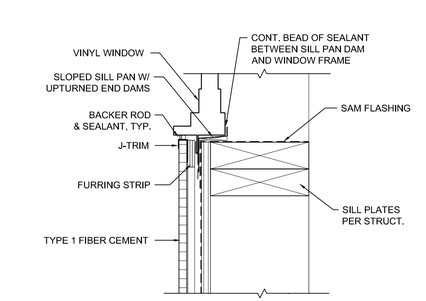

7 TYP. WINDOW SILL @ TYPE 1 FC
SCALE: 3" = 1'-0"

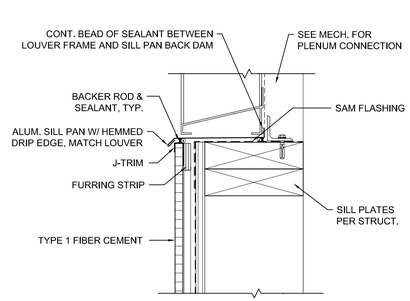

11 TYP. LOUVER SILL @ TYPE 1 FC
SCALE: 3" = 1'-0"

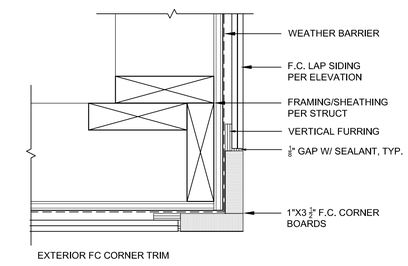

4 F.C. LAP SIDING TRIM DETAILS
SCALE: 3" = 1'-0"

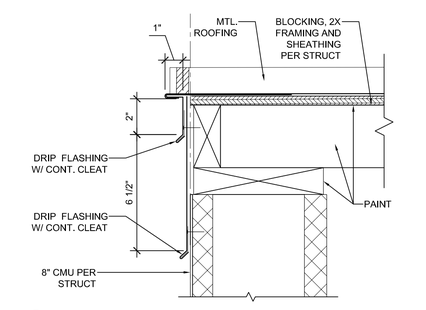

8 RAKE @ TRASH ENCLOSURE
SCALE: 3" = 1'-0"

12 NOT USED
SCALE: 3" = 1'-0"

PRCNC20240216

ZERVAS
ARCHITECTURE | INTERIOR DESIGN
zervasgroup.com
209 Prospect Street
Bellingham, WA 98225
360.734.4744

9587 REGISTERED ARCHITECT
ANDREW J. KRZYSIEK
STATE OF WASHINGTON

City of Puyallup
Development & Permitting Services
ISSUED PERMIT
Building | Planning
Engineering | Public Works
Fire | Traffic

100% CD SET

REV	ISSUED FOR	DATE

PLAN NORTH | TRUE NORTH
SCALE: SEE DWG

PSE - OPERATIONAL TRAINING CENTER

EXTERIOR DETAILS - OUTDOOR TRAINING

PROJECT No:	202202.06
DRAWN BY:	MR
CHECKED BY:	AK
DATE ISSUED:	01/26/24

A7.06

© 2023

1/26/2024 2:17:02 PM

PRCNC20240216

ZERVAS
209 PROSPECT STREET - BELLINGHAM, WA 98225
p.360.734.4744 - zervasgroup.com

9587 REGISTERED ARCHITECT
ANDREW J. KRZYSIEK
STATE OF WASHINGTON

City of Puyallup
Development & Permitting Services
ISSUED PERMIT
Building | Planning
Engineering | Public Works
Fire | Traffic

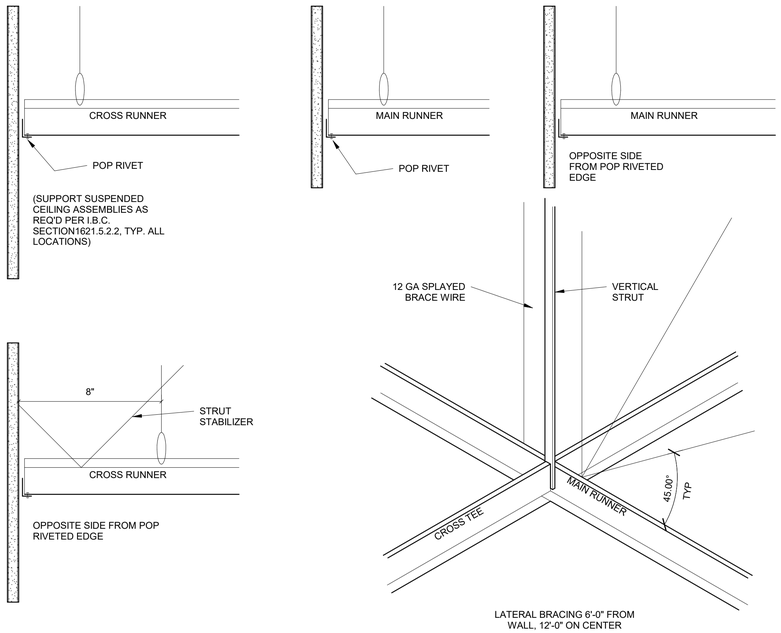

1 TYPICAL ACOUSTICAL CEILING BRACING
3" = 1'-0"

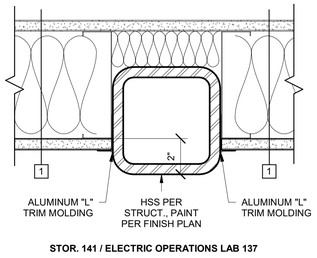

6 EXPOSED COLUMN @ STOR. 141
3" = 1'-0"

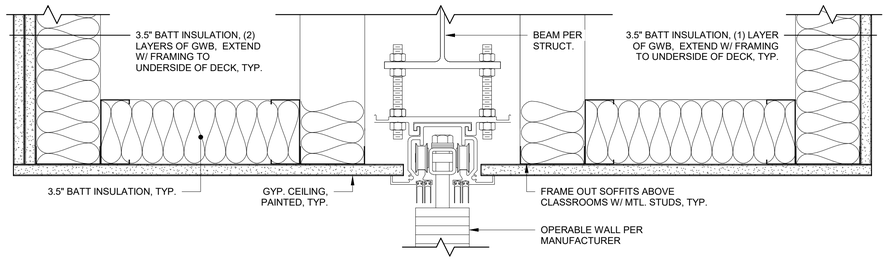

10 OPERABLE WALL @ CLASSROOMS
3" = 1'-0"

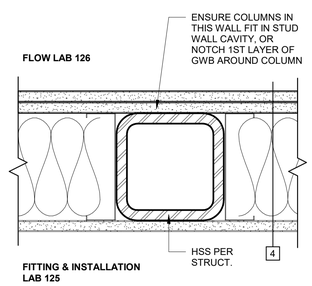

7 COLUMN @ INTERIOR WALL TYPE 4
3" = 1'-0"

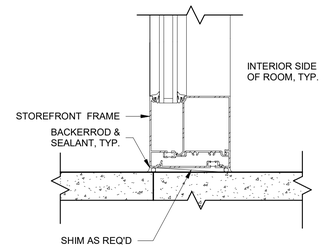

11 INTERIOR STOREFRONT SILL
3" = 1'-0"

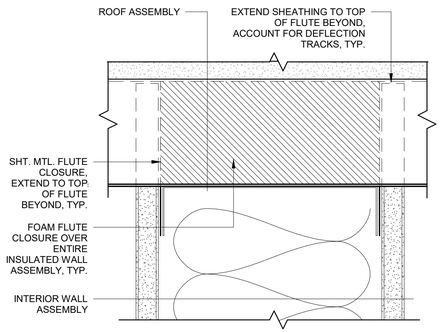

13 DECK FLUTE CLOSURE PERPENDICULAR TO WALL
6" = 1'-0"

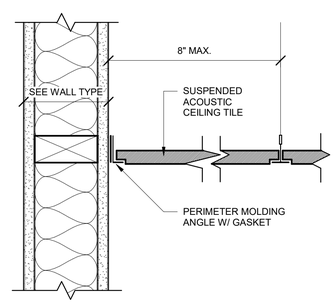

2 TYPICAL ACT SUSPENSION SYSTEM
3" = 1'-0"

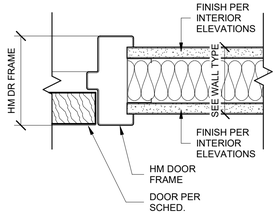

4 TYPICAL INTERIOR HM DOOR JAMB
3" = 1'-0"

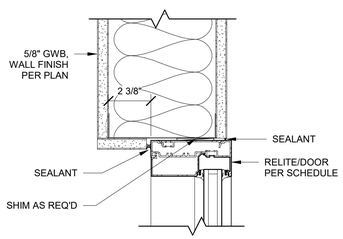

8 STOREFRONT HEAD @ ENTRY VESTIBULE
3" = 1'-0"

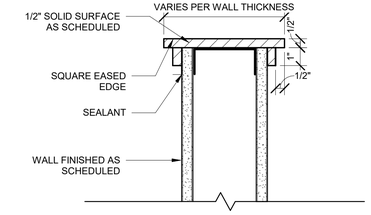

16 SOLID SURFACE WALL CAP, TYP.
3" = 1'-0"

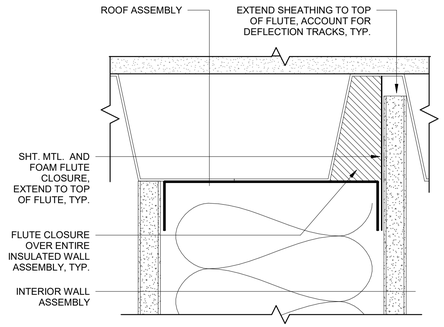

14 DECK FLUTE CLOSURE PARALLEL TO WALL
6" = 1'-0"

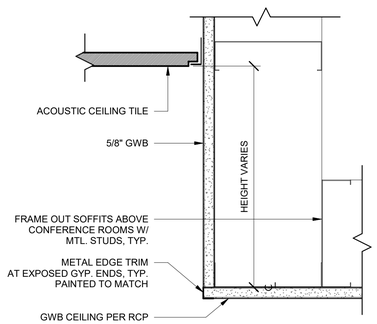

3 GWB TO ACT CEILING TRANSITION
3" = 1'-0"

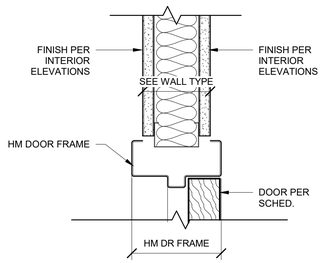

5 TYPICAL INTERIOR HM DOOR HEAD
3" = 1'-0"

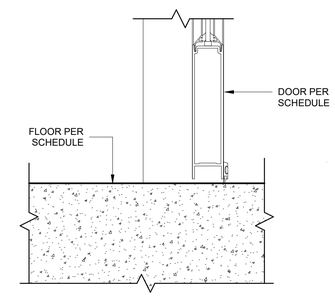

9 STOREFRONT DOOR SILL @ ENTRY VESTIBULE
3" = 1'-0"

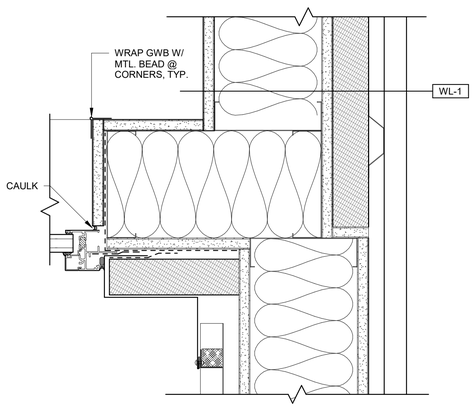

12 WINDOW JAMB @ INSIDE CORNER
3" = 1'-0"

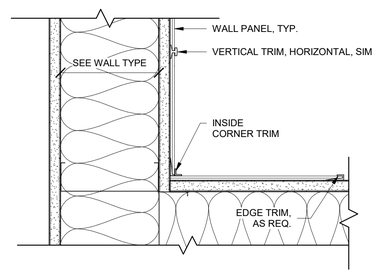

15 TYPICAL WALL PANEL JOINTS
3" = 1'-0"

100% CD SET

REV	ISSUED FOR	DATE

NORTH. PLAN.

SCALE.
As indicated

PSE OPERATIONAL TRAINING CENTER

INTERIOR DETAILS

PROJECT#.			202202.06
DRAWN.	Author	CHECK.	Checker
ISSUED.			01/26/24

A8.01

202202.06
Autodesk Docs://7222 - 5111 - PSE North Bend Precon Design/PSE-OTC_Current.rvt

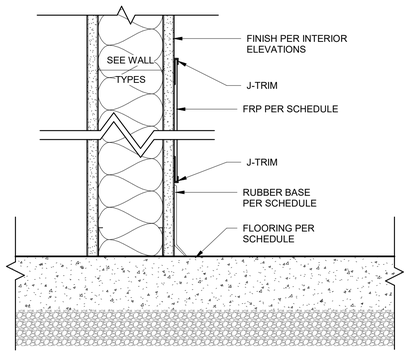

1 RUBBER BASE @ FRP
3" = 1'-0"

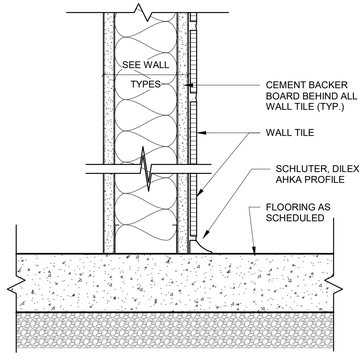

4 TILE BASE
3" = 1'-0"

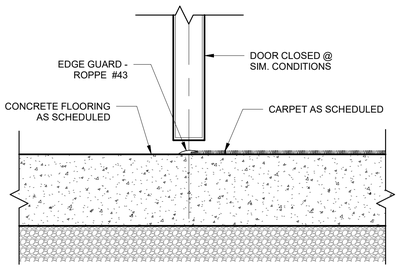

7 CARPET TO CONCRETE TRANSITION
3" = 1'-0"

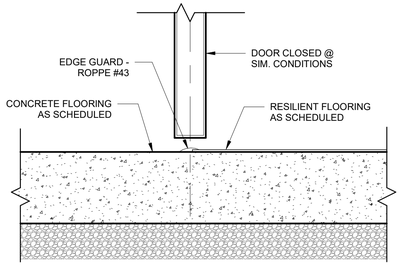

10 RESILIENT TO CONCRETE TRANSITION
3" = 1'-0"

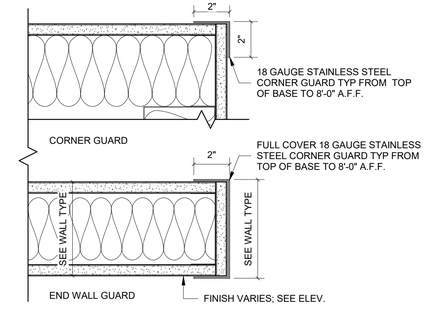

13 CORNER & WALL GUARD
3" = 1'-0"

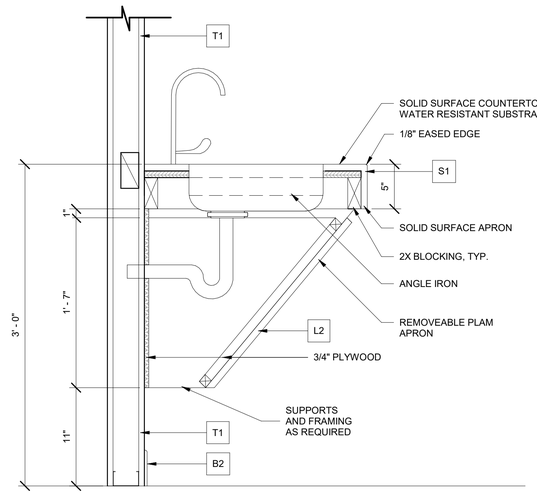

2 RESTROOM VANITY SECTION
1 1/2" = 1'-0"

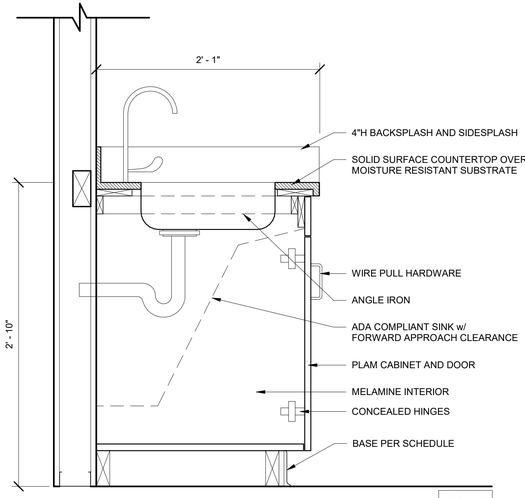

5 SINK BASE CABINET SECTION
1 1/2" = 1'-0"

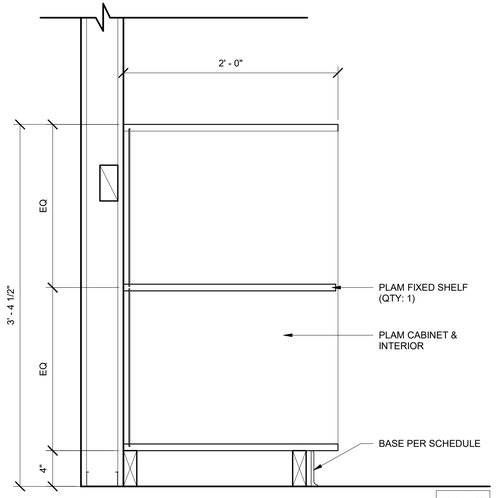

8 CUBBIE CABINET SECTION @ FITTING LAB DESK
1 1/2" = 1'-0"

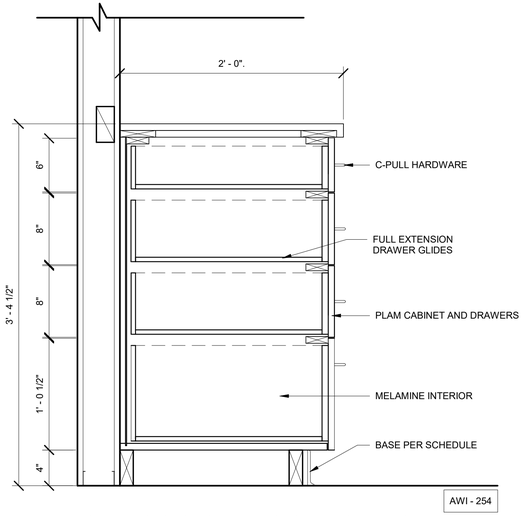

11 4 DRAWER CABINET SECTION @ APPLIANCE & FITTING LAB DESK
1 1/2" = 1'-0"

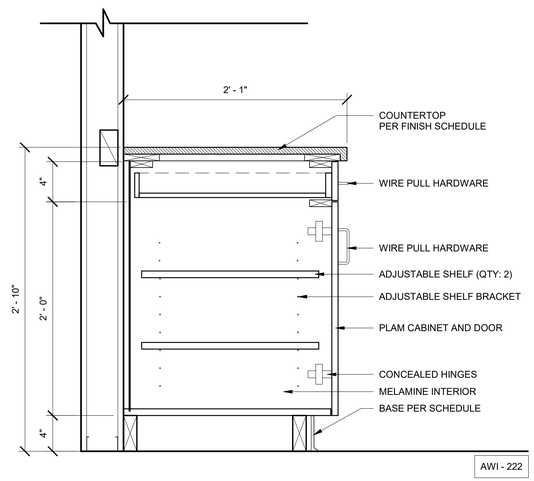

3 DRAWER & DOOR BASE CABINET SECTION
1 1/2" = 1'-0"

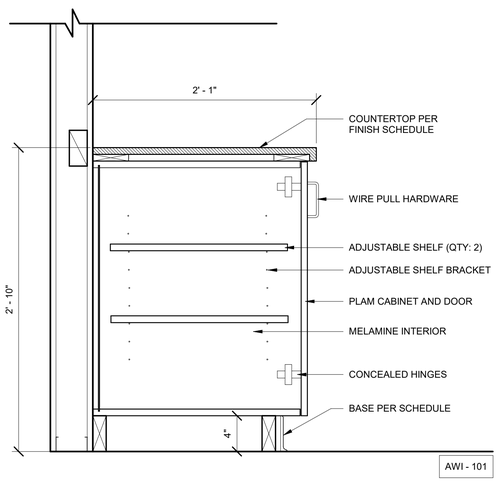

6 DOOR BASE CABINET SECTION
1 1/2" = 1'-0"

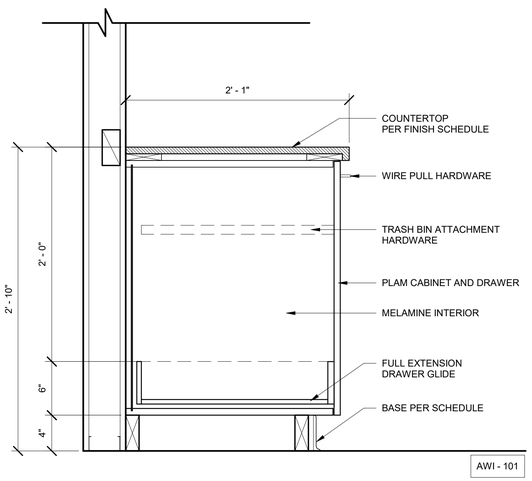

9 WASTE & RECYCLE BASE CABINET SECTION
1 1/2" = 1'-0"

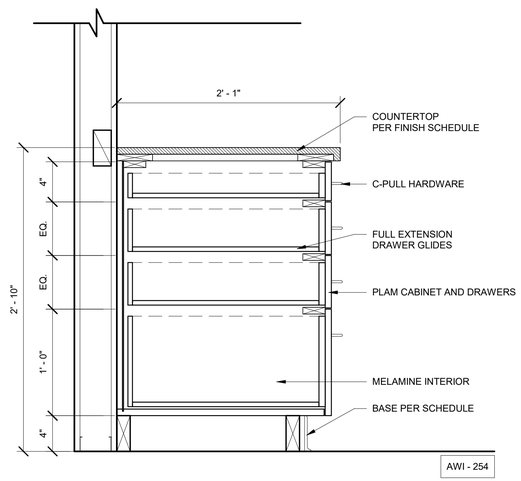

12 4 DRAWER BASE CABINET SECTION
1 1/2" = 1'-0"

ZERVAS
209 PROSPECT STREET - BELLINGHAM, WA 98225
p.360.734.4744 - zervasgroup.com

PRCNC20240216

9587 REGISTERED ARCHITECT
ANDREW J. KRZYSIEK
STATE OF WASHINGTON

City of Puyallup
Development & Permitting Services
ISSUED PERMIT
Building | Planning
Engineering | Public Works
Fire | Traffic

100% CD SET

REV	ISSUED FOR	DATE

NORTH. PLAN.
SCALE.
As indicated

PSE OPERATIONAL TRAINING CENTER

INTERIOR DETAILS

PROJECT#. 202202.06
DRAWN. Author CHECK. Checker
ISSUED. 01/26/24

A8.02

PRCNC20240216

ZERVAS
209 PROSPECT STREET - BELLINGHAM, WA 98225
p.360.734.4744 - zervasgroup.com



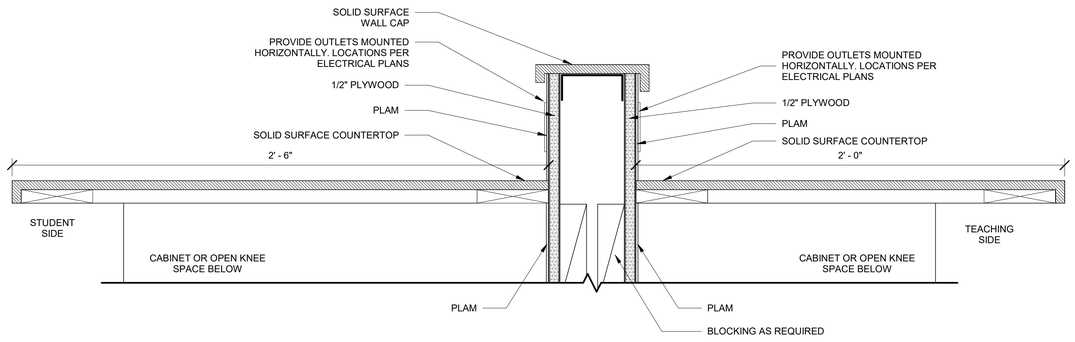

1 FITTING LAB S.S. COUNTER SECTION
3" = 1'-0"

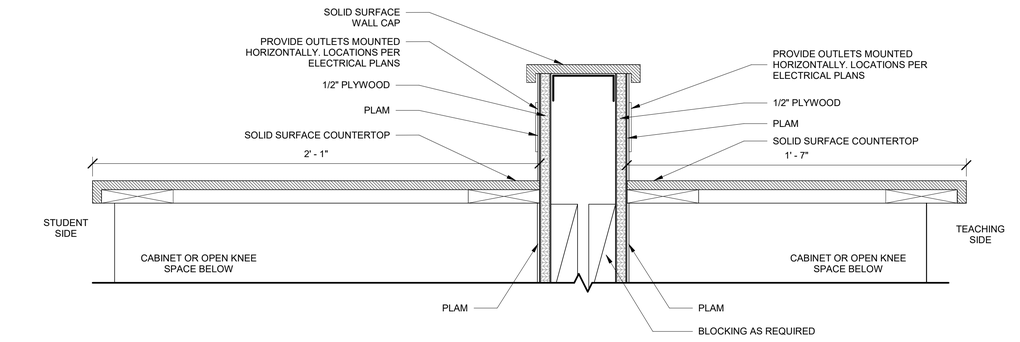

3 APPLIANCE LAB S.S. COUNTER SECTION
3" = 1'-0"

City of Puyallup
Development & Permitting Services
ISSUED PERMIT
Building | Planning
Engineering | Public Works
Fire | Traffic

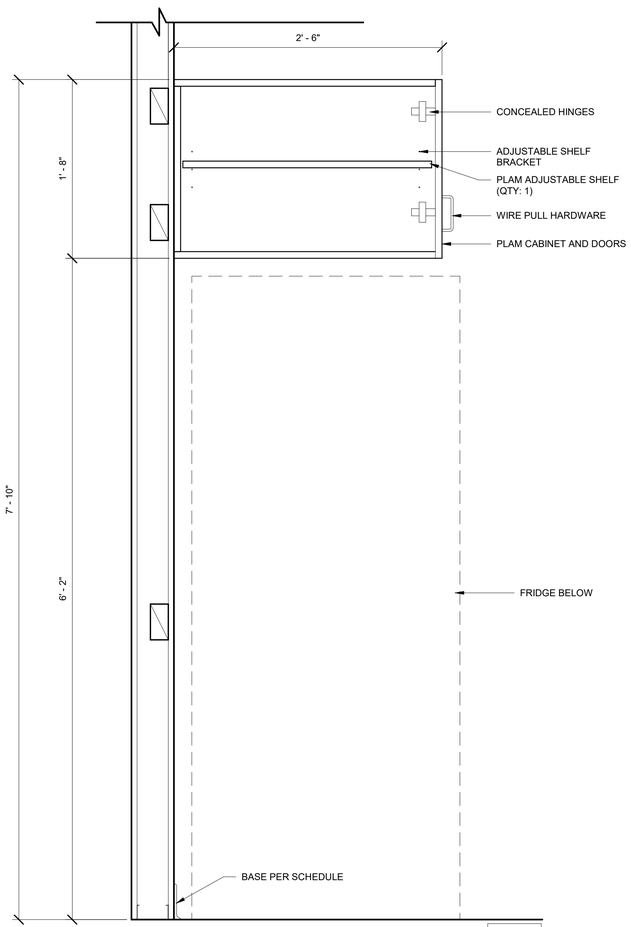

2 UPPER DOOR CABINET @ EQUIPMENT SECTION
1 1/2" = 1'-0"

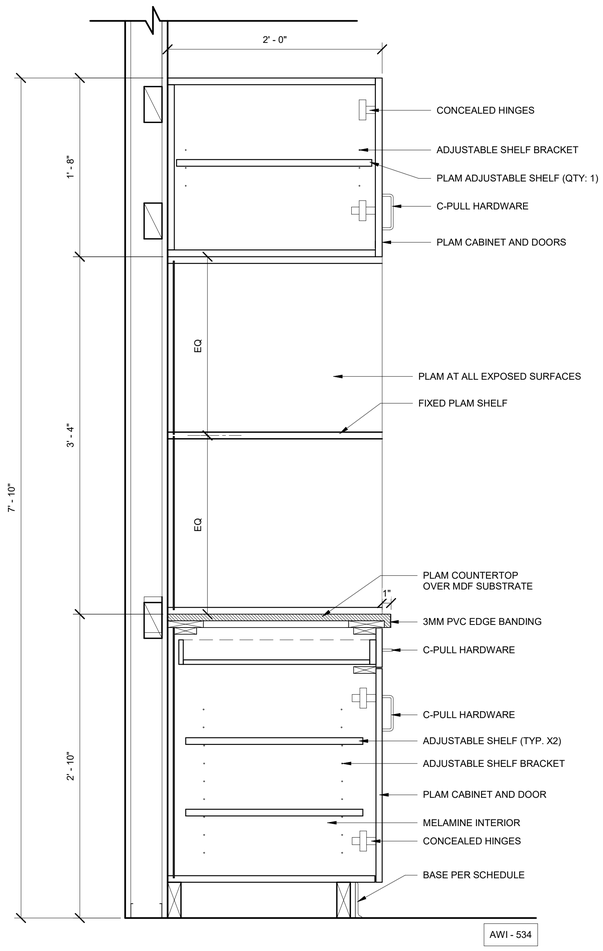

4 MICROWAVE CABINET SECTION
1 1/2" = 1'-0"

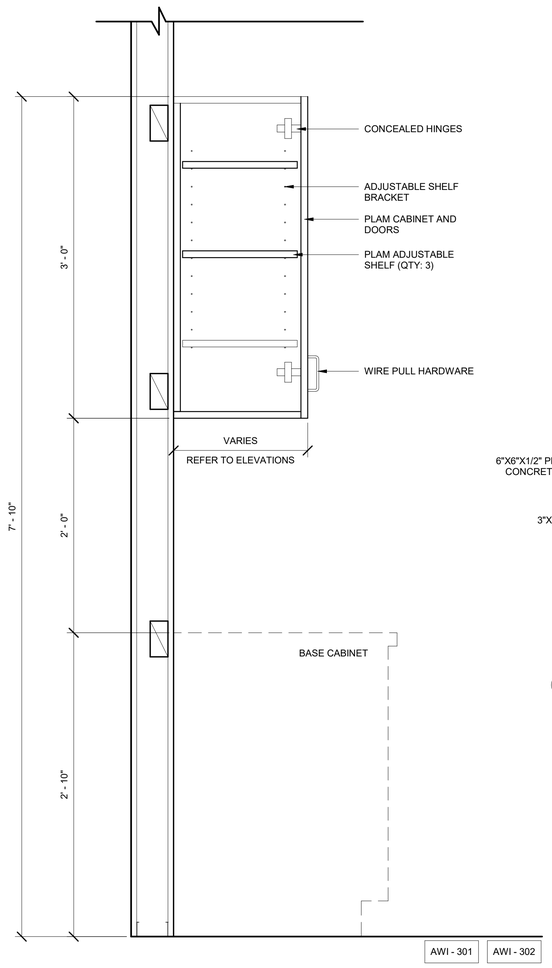

5 UPPER DOOR CABINET SECTION
1 1/2" = 1'-0"

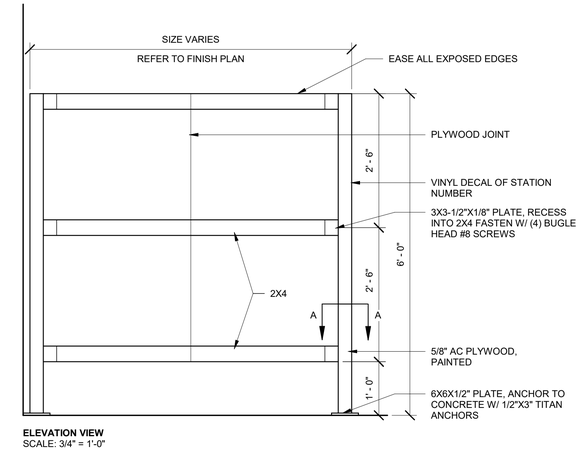

ELEVATION VIEW
SCALE: 3/4" = 1'-0"

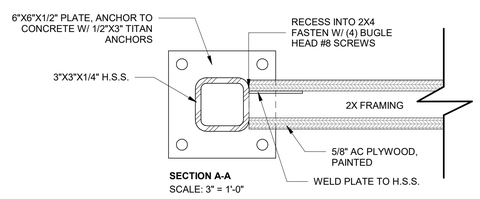

SECTION A-A
SCALE: 3" = 1'-0"

6 APPLIANCE LAB PARTITION
SCALE AS INDICATED

100% CD SET

REV	ISSUED FOR	DATE

NORTH. PLAN.

SCALE.
As indicated

PSE
OPERATIONAL
TRAINING
CENTER

INTERIOR
DETAILS

PROJECT#.	202202.06
DRAWN. SD	CHECK. AK
ISSUED.	01/26/24

A8.03

PRCNC20240216

1/22/2024 9:51:52 AM

-- GENERAL NOTES --

1 DESIGN BASIS: Designed in accordance with the 2018 International Building Code (IBC).
2 RISK CATEGORY: II (per IBC Table 1604.5)
3 DESIGN DEAD / LIVE LOADS
- Roof Dead Load: 23 PSF Typical (Incl. Framing and 5 PSF solar allowance)
- Roof Live Load: 20 PSF Typical
4 DESIGN SNOW LOADS (ASCE 7-16)
- Ground Snow Load: Pg = 20 PSF
- Flat Roof Snow Load: Pf = 20 PSF
- Uniform Roof Design Snow Load = 20 PSF
- Thermal Factor: Ct = 1.20 (unheated), 1.0 (heated) / Exposure Factor: Ce = 1.0 / Snow Load Importance Factor: Is = 1.0
- Snow Drift: See OWSJ load diagrams
5 DESIGN WIND LOADS (ASCE 7-16)
- V = 98 MPH / V(asd) = 76 MPH
- Exposure: B / Internal Pressure Coefficient: +/- 0.18
- Components & Cladding: Components and cladding-wind pressures to be used for the design of exterior components and cladding (by others) shall be determined in accordance with ASCE 7 and the IBC.
6 DESIGN SEISMIC LOADS (ASCE 7-16)
- Site Class = E
- Seismic Design Category = D / Importance Ie = 1.0
- Ss = 1.277 / S1 = 0.439
- Sds = 1.022 / Sd1 = 0.679
- Building System: Building Frame
- SFRS: Buckling Restrained Braced Frame
- Response Modification Factor Used: R = 8.0
- Seismic Response Coefficient: Cs = 0.128
- Design Base Shear: V = 189 kips
- Analysis Procedure: Equivalent Lateral Force Procedure
7 QUALITY: Contractor shall ensure high standards of workmanship throughout, with strict adherence to the contract documents and all governing codes and standards.
8 DESIGN RESPONSIBILITY: Kingworks is responsible only for the design of the primary structural system as shown in the contract documents. Design of all secondary structure or non-structural elements are by others.
9 DISCREPANCIES: Notify the Architect immediately of any discrepancies between these notes, the contract drawings, the specification, or the governing code. The Architect shall reply in writing. Any related work performed by the Contractor prior to receiving a reply from the Architect is at the Contractor's sole risk. For purposes of bidding, the most stringent of the conflicting documents shall apply.
10 VERIFICATIONS: Verify all existing conditions; verify all dimensions in the field; verify architectural, mechanical and electrical openings for size, location and number; notify the Architect of any discrepancies, substandard existing conditions, or conditions not included in or contrary to the Contract Documents prior to shop drawing submittal or construction.
11 DRAWING COORDINATION: Coordinate the structural drawings with drawings from all other disciplines (including but not limited to Architectural, Civil, Mechanical, and Electrical).
12 COMPLETED FORM: The structure shown in these drawings is designed to be stable and to resist the loads above only in a fully completed form. Contractor shall ensure that the structure is adequately braced and shored during construction for all temporary loads until all elements are in place, and shall ensure that temporary loadings do not exceed the allowable capacity of any structural elements both before and after these elements are in place.
13 MEANS AND METHODS: Contractor is solely responsible for site safety, coordination, procedures, construction methodology, shoring, bracing, sequencing, and all other "means and methods" of construction except where specifically shown in the Contract Documents.
14 PROTECTION AND BRACING: Contractor is solely responsible for the protection of existing buildings, utilities, streets, equipment, etc. during construction. Provide temporary bracing and protection as required.
15 SCALING: Do not scale drawings. See architectural drawings for dimensions, and notify the Architect of any discrepancies.
16 ALTERATIONS: Any holes or other alterations to the structure which are not specifically detailed on the Contract Drawings shall be submitted to the engineer for approval.
17 LOAD COORDINATION: The design of all pre-engineered components shall include provisions for precise locations and weights of all mechanical units and other concentrated loads. Concentrated loads are not necessarily indicated on the Structural Drawings, and must be coordinated by the General Contractor, who shall also inform the Architect of any significant loads not shown in the contract documents. The Contractor shall assume full responsibility for coordination of weights, locations, hanger spacings, methods of attachment and seismic bracing of all mechanical units, sprinklers, pipes, ductwork, and other miscellaneous MEP assemblies.
18 MEP CONNECTIONS TO STRUCTURE: Unless specifically shown otherwise in the Contract Documents, all anchorage, support, and seismic bracing of mechanical and electrical equipment, piping, ceilings, fixtures and other non-structural components shall be designed by a Washington State Licensed Professional Engineer and installed by the Contractor. The engineer shall be retained by the Contractor, and the Contractor is responsible for all associated engineering, component, and installation costs. Design shall be per ASCE 7 Chapter 13.
19 DELIVERY, STORAGE AND HANDLING: All products shall be delivered, stored, and handled according to the Manufacturer's recommendations and installation instructions. Protect all items from damage, moisture, corrosion, or other deterioration before, during and after installation.
20 COPYRIGHT: These drawings, and all designs shown within these drawings, are copyrighted by Kingworks Structural Engineers. Duplication is not permitted without written permission. The designs shown herein are intended for this project only and may not be used on any other project or for any other purpose.

-- SUBMITTALS --

1 GENERAL: Provide PDF of all submittals to the Architect. Allow two weeks for review. Submittals will be reviewed for general conformance to the contract documents. Responsibility for adherence to the contract documents lies solely with the Contractor, including but not limited to dimensions, sizes, connections, and quantities.
2 CONTRACTOR REVIEW: Contractor shall review, mark, and stamp all submittals before submittal to the Architect. Unreviewed or unstamped submittals will be returned to the Contractor without review.
3 RESUBMITTALS: Resubmittals shall have all revisions clearly identified with "drawing clouds" and revision dates. KW shall not be responsible for review of any unmarked revisions.
4 SHOP DRAWINGS: To include typical and unique conditions and all connections, shall be submitted to the Structural Engineer of Record for the following products prior to fabrication. Shop drawings shall clearly demonstrate the Contractor's understanding of the contract documents. The following shall be considered minimum structural submittals for this project:
- Concrete / Masonry Reinforcing Steel (incl. wall elevations)
- Concrete / Grout Mix Designs (confirm f'c & f'm prior to construction)
- Slab-on-Grade Jointing Plan
- Structural Steel
- Metal Roof Deck (Layout and Material Specification)
- Metal Roof Deck Fasteners (Plan and Material Specification)
- Fiberglass Trench Grate
- Non-Shrink Grout Material Specification and MFR Installation Recommendations
5 DEFERRED SUBMITTALS: Shall be designed by a Specialty Component Engineer (SCE) retained by the Contractor. SCE shall be a licensed Professional Engineer in the State of Washington, with 5-years minimum experience in design of the components included in the deferred submittal. Submittals shall clearly indicate all loads and reactions to be imposed on the primary structure. Submittals shall include all components and connections required to perform the work. Where the Contract Documents indicate member or connection qualities and/or quantities, these shall be considered a minimum and remain the design responsibility of the SCE to increase as required to satisfy load and deflection requirements. Deferred submittals shall include calculation set. Both the calculation set and all related shop drawings of the deferred submittal shall be sealed prior to submission. The Architect shall forward deferred submittals to the Building Official where required. The following shall be considered Deferred Submittals on this project:
- Buckling Restrained Braces
- Open Web Steel Joists (OWSJ)
- Cold Formed Steel Framing - Interior and Exterior
- Metal Plate Connected Wood Trusses (MPCWTs)
6 SUBMITTAL REVIEW COMMENTS: Engineer marks and comments on shop drawings and other submittals are a normal and expected part of the submittal process, and are not to be used as a basis for change orders except in cases where these marks result in or derive from substantial changes to the Contract Drawings. Time required to revise and resubmit any submittal shall be considered inherent to the submittal review process and shall not be deemed a change order. If discrepancies are discovered between the submittals and the Contract Documents (either before, during, or after submittal review), the Contract Documents shall govern and be implemented unless specifically directed otherwise.

-- SPECIAL INSPECTIONS, TESTING, AND STRUCTURAL OBSERVATION --

1 GENERAL: A special inspection agency shall be retained by the owner to perform inspections according to IBC Chapter 17. The following scheduled structural special inspection and testing regimen shall be cross-referenced with the IBC and its referenced standards for more specific requirements and exceptions. Special inspection and test reports shall be submitted to the Building Official, Architect and Structural Engineer in accordance with IBC 1704.2.4.
2 NONSTRUCTURALCOMPONENTS: Nonstructural components are also subject to special inspection for conformance to the Seismic Design Requirements of ASCE 7-16 Chapter 13. The support and seismic bracing of nonstructural components shall be designed by a Washington State Licensed Engineer, who shall be retained by the Contractor. Nonstructural components subject to seismic design and periodic special inspection requirements of ASCE 7-16 and IBC Chapter 17 include (but are not limited to) the following:
- Architectural components (IBC 1705.12.5)
- Nonstructural components (IBC 1705.13.2)
- MEP Components (IBC 1705.12.6)
- Reference the architectural, electrical, and mechanical drawings and/or specifications for additional special inspection and testing requirements.
3 STRUCTURAL OBSERVATION: Kingworks will perform Structural Observations in accordance with IBC Section 1704.6 if/as required. These observations provide intermittent checks of general conformance to the design intent and are in addition to (not replacing) the third-party special inspection regimen. It shall be the Contractor's responsibility to keep the Structural Engineer apprised of the general schedule of construction, such that observations may be made at appropriate stages before significant structural components (such as reinforcing bars, framing members, or wall holdowns) are obscured.

-- STRUCTURAL SPECIAL INSPECTION SCHEDULE --

	STRUCTURAL ITEM	FREQUENCY (C=continuous, P=periodic)	REFERENCE (2018 IBC Section, uon)
1	STEEL		1705.2, 1705.12.1
	- Material Verification - Steel Members	P	AISC 360-16 Chap N
	- High Strength Bolting - Material Verification & Installation	P	AISC 360-16 Chap N
	- Weld Filler Material Verification	P	AISC 360-16 Chap N
	- Complete Joint Penetration and Partial Joint Penetration Groove Welds	C	AISC 360-16 Chap N
	- Multipass Fillet Welds	C	AISC 360-16 Chap N
	- Single Pass Fillet Welds > 5/16	C	AISC 360-16 Chap N
	- Plug and Slot Welds	C	AISC 360-16 Chap N
	- Single Pass Fillet Welds ≤ 5/16	P	AISC 360-16 Chap N
	- Field-Installed Welded Studs	P	AISC 360-16 Chap N
	- Welding of Stairs and Railing Systems	P	AISC 360-16 Chap N
	- Cold-Formed Steel	P	1705.11.2, 1705.12.3, AWS D1.3
	- Nonstructural Steel	Varies	1705.13.2
	- SFRS Steel	Varies	AISC 360-16 Chap N, AISC 341-16 Appx Q,1705.13
	- Open Web Steel Joists/Girders	P	Table 1705.2.3
	- Steel Deck	P	1705.2.2
2	CONCRETE		1705.3, ACI 318-14 26.13
	- Reinf Welding	P (C for shearwall or other shear reinf)	1705.3.1, Table 1705.3
	- Reinf Placement	P (and prior to all pours)	Table 1705.3, ACI 318-14 26.6.2
	- Anchor Placement	P (and prior to all pours)	Table 1705.3
	- Concrete Placement	C	Table 1705.3
	- Concrete Testing	Per ACI 318-14 26.12	Table 1705.3
	- Formwork & Curing	P	Table 1705.3
3	MASONRY	"Level B" QA (not req'd for veneer)	1705.4, 2105, TMS 402/602
	- Mortar Proportions & Joints	P	TMS 402-16 Table 3.1.2
	- Reinf Placement	P (and prior to grouting)	TMS 402-16 Table 3.1.2
	- Type/Size/Location (Elements)	P	TMS 402-16 Table 3.1.2
	- Type/Size/Location (Anchors)	P (and prior to grouting)	TMS 402-16 Table 3.1.2
	- Cold Weather Measures	P	TMS 402-16 Table 3.1.2
	- Grout Placement	C	TMS 402-16 Table 3.1.2
	- Prism Testing	P (not req'd for Unit Strength Method)	2105, ACI 530.13 Table 3.1.2
5	POST-INSTALLED ANCHORS		Table 1705.3
	- Epoxy or Adhesive Anchors Used in Horizontal or Overhead Position	C	See ICC-ES report
	- All Other Anchors Installed in Hardened Concrete or Masonry	P (except where C req'd by ICC-ES report)	See ICC-ES report
6	SOILS & FOUNDATIONS		1705.6, Table 1705.6, Geotech Report
	- Subgrade Adequacy	P (beneath fill and/or foundations)	Table 1705.6
	- Excavation Depth	P	Table 1705.6
	- Fill Materials	P	Table 1705.6
	- Fill Placement & Compaction	C	Table 1705.6

-- FOUNDATIONS & SUBGRADE --

1 SOIL ALLOWABLE BEARING PRESSURE: 2500 PSF (x 1.33 when subjected to wind or seismic loadings).
2 GEOTECHNICAL REPORT: Reference Terra Associates geotechnical report dated April 6, 2023 for subgrade preparation, backfill, surcharge program, compaction, wet weather work, and other recommendations. All provisions of the geotechnical report shall be enacted by the Contractor.
3 GEOTECHNICAL VERIFICATION: The Owner shall retain a geotechnical inspection agency to inspect the excavations and confirm that the provisions of the Geotechnical Report are followed. All recommendations of the geotechnical inspector shall be followed and communicated with the design team via inspection report. Contractor shall coordinate this inspection effort with the Owner.
4 UTILITIES: Utilities are not to pass through or beneath footings, stemwalls, and other concrete work on grade except as shown in specific details.
5 MISCELLANEOUS VERIFICATIONS: Verify sizes, slopes and locations of tunnels, electrical cells, pits, pipes, floor drains, trenches and floor recesses with architectural, mechanical and electrical contractors.
6 ALIGNMENT: All footings shall be centered below columns and walls, unless dimensioned otherwise.
7 BACKFILL: Do not backfill against below-grade walls until strength has been achieved and floor framing is in place.
8 FROST PROTECTION: Maintain minimum 1'-6" soil cover, measured from finished grade to the bottom of the footing, for perimeter wall foundations and isolated exterior foundations.
9 EXCAVATION SLOPE: Excavation slope shall not exceed that permitted by local regulation, except as specifically approved by the geotechnical engineer.

-- REINFORCED CONCRETE --

1 REFERENCED STANDARDS: Reinforced concrete shall conform to the requirements of the following documents, except as modified in these drawings.
- ACI 301-16 "Standards Specifications for Structural Concrete"
- ACI 318-14 "Building Code Requirements for Structural Concrete"

-- CONCRETE MATERIAL SCHEDULE --

	f'c (PSI)	W/CM (MAX)	COARSE AGG (MAX)	AIR ENT	MIN FLY ASH AND/OR SLAG	MAX FLY ASH AND/OR SLAG
CONTROLLED DENSITY FILL	1000	-	SAND	-	-	
FOUNDATIONS / STEMWALLS (1'-7" OR MORE BELOW GRADE)	3500	0.55	1"	-	30%	50%
FOUNDATIONS / STEMWALLS (1'-6" OR LESS BELOW GRADE)	4500	0.45	1"	6%	20%	40%
SLAB ON GRADE (EXTERIOR)	4500	0.45	3/4"	6%	20%	40%
SLAB ON GRADE (INTERIOR - 6+ INCHES)	4000	0.50	3/4"	-	20%	40%
SLAB ON GRADE (INTERIOR - 4-5 INCHES)	3500	0.55	3/4"	-	30%	50%
PILASTERS/PIERS	4500	0.45	3/4"	6%	20%	40%

-- REINFORCED CONCRETE --

2 MATERIALS
- Required concrete strength "f'c" shall be evaluated at 28 days (56 days OK for fly ash or slag concrete).
- Conform to following concrete material schedule requirements.
- Cementitious Materials: Provide Type I or II Cement per ASTM C150 (Type III OK for Precast) or Type IL Blended Hydraulic Cement per ASTM C595. Cementitious materials for use in concrete exposed to soil or weather must meet or exceed the S1 exposure class per ACI 318-14 Table 19.3.2.1.
- Fly Ash: Class F per ASTM C618.
- Slag: GGBF Slag per ASTM C989, Grade 100 minimum.
- Air Entrainment: Provide air entrainment per concrete mix table +/- 1.5%, all other locations exposed to weather shall have air entrainment of 6% (+/- 1.5%).
- All 8-inch thick slabs shall have 28-day maximum shrinkage of 0.050%. Submit test data for a minimum of 3 specimens of the proposed mix in conformance with ASTM C157 for review.
- Typical Reinforcing Steel: ASTM A615, Grade 60
- Weldable Reinforcing Steel: ASTM A706, Grade 60
- Welded Wire Fabric: ASTM A185
3 SPLICES: All reinforcing steel lap splices are to be per typical schedule unless noted otherwise. All welded wire reinforcement lap slices shall be the greater of one space plus 2 inches or 6 inches, unless otherwise noted.
4 CONTINUITY: Horizontal reinforcing steel in walls and wall footings shall be continuous around corners, same size and spacing. At intersections of walls or footings, extend all bars as far as possible into continuous element and terminate with standard hook.
5 CLEAR COVER: Provide clear cover from outermost reinforcing to surface of concrete in accordance with the following:
- Elements cast against and permanently exposed to earth: 3" clr
- Elements formed and exposed to earth or weather: 2" clr (#6-#18), 1 1/2" clr (#3-#5)
- Slabs, Walls, Joists NOT exposed to weather or in contact w/ ground: 3/4" clr (#3-#11)
- Columns, Pilasters, Piers (longitudinal, hoops, ties, stirrups, spirals): 1 1/2" clr
6 INTEGRAL COLUMN & WALL FOOTINGS: Where column footings are shown integral with wall strip footings, transverse wall footing bars need not continue through width of column footing. Longitudinal wall footing bars shall extend continuous through column footing, in addition to column footing bars per typical detail.
7 ACCESSORIES: Provide all accessories, chairs, spacer bars and supports necessary to secure steel In accordance with ACI Code of Standard Practice.
8 CHAMFER: Chamfer all exposed corners and edges above grade per the Architect.
9 FORM STRIPPING: Do not strip forms until concrete has reached adequate strength.
10 SLEEVES / OPENINGS: Furnish and place all sleeves and openings as shown on the drawings or as specified.
11 REINFORCING FABRICATION: All reinforcing shall be shop fabricated. Exception: #3 or #4 bars may be field bent one time in any location, do not rebend or restraighten.
12 HOOKS: All hooked bars shall be a standard shop fabricated hook with bend radii and length per ACI 318, UON.
13 TESTING: Test cylinders shall be taken by qualified personnel according to ACI 318-14 Section 26.12
14 MEMBRANE: Provide vapor barrier (per spec) directly below slab-on-grade (above compacted fill), reinforce all seams and repair tears as necessary.
15 WEATHER PROVISIONS: Observe all ACI recommendations for hot or cold weather concreting cure slabs using an approved curing compound or wet cure system per ACI recommendations, with special consideration for slag and fly ash concrete as appropriate.
16 CONSTRUCTION JOINTS: All construction joint locations shall be submitted to the Architect for approval. Roughen joints to 1/4-inch minimum amplitude, remove all laitance. Soak joint continuously for 2 hours minimum, then remove all standing water, immediately prior to second pour. Unless noted otherwise, all reinforcing shall be spliced/continuous across the construction joints.
17 FIBER REINFORCEMENT: See spec for requirements.

-- STRUCTURAL MASONRY --

1 SPECIFICATION: Masonry construction and materials shall conform to all requirements of "Specification for Masonry Structures" (TMS 602-16), unless noted otherwise.
2 UNIT STRENGTH: The concrete masonry design is based on a specified compressive strength of masonry (f'm) of 1500 psi at 28 days. The compressive strength of masonry shall be determined by the unit strength method in accordance with TMS 602-16.
3 MATERIALS
- Hollow concrete masonry units: ASTM C90, Grade N, Type I, normal weight units, net area compressive strength of masonry units = 2150 psi
- Mortar: ASTM C270, Type S portland cement/lime mortar
- Grout: maximum aggregate size of 3/8", compressive strength equal or greater than the strength of masonry units at 28 days (AND not less than 2000 psi in any case)
- Reinforcing Steel: ASTM A615, Grade 60 typical (A706 for weldable bars)
- Portland Cement: Cement in mortar and grout shall contain 0.6% or less alkali by weight
4 BELOW GRADE: All masonry below grade shall be grouted solid.
5 DEVELOPMENT: All masonry reinforcing shall be developed and lapped in solid grout per typical schedule.
6 WALL GROUTING: Walls indicated as partially grouted on the structural drawings may not be fully grouted without written approval from the Structural Engineer.
7 POUR AND LIFT HEIGHTS: Maximum "pour height" shall not exceed 12'-0". Each "pour height" shall be divided into separate "lift heights" not to exceed 5'-4" each. Each "lift height" shall be individually consolidated (vibrated), including consolidation penetrating into the lower uncured lifts..
8 CLEANOUTS: Cleanouts are required in the bottom course of masonry for each grout pour when the "pour height" exceeds 5'-4". Cleanouts shall meet the criteria of TMS 602-16 Section 3.2F.
9 REINFORCEMENT ALIGNMENT: Vertical reinforcement shall be centered within cells unless noted otherwise. Use approved spacers to ensure alignment within cells. See details for other bar alignment criteria.
10 HORIZONTAL REINFORCEMENT: Horizontal reinforcement shall be tied to vertical reinforcement, continuous, and terminate with standard 180-degree hook around vertical bar at wall ends or jambs, or 90-degree bends extending one lap length at wall corners. Where CMU wall intersects with concrete wall, dowel all horizontal bars similar to typical corner or tee details.
11 STOPPAGE KEYS: When the grouting is stopped for one hour or longer, horizontal construction joints shall be formed by stopping the grout pour 1-1/2" below the top of the uppermost unit.
12 BOND BEAM MINIMUM REINFORCEMENT: Reinforce all bond beams with (2) #4 continuous bars, unless noted otherwise.
13 CLEAR COVER: Minimum clear cover from face of masonry to face of reinforcing shall be 1-1/2" minimum for #5 bars or smaller, and 2" minimum for #6 bars or larger. See details for typical reinforcement alignment.
14 CONTROL JOINTS: Refer to architectural and structural drawings for locations and details of vertical control joints. Verify all joint locations with Architect.
15 HOOKS: All hooked bars shall be a standard shop fabricated hook with bend radii and extension per TMS 402-16 Table 6.1.8

STRUCTURAL SHEET LIST

S0.01	STRUCTURAL NOTES
S0.02	STRUCTURAL NOTES
S0.03	STRUCTURAL MISC
S0.04	SEISMIC QC/QA REQMTS
S1.00	OUTDOOR TRAINING SITE STRUCTURES - OVERVIEW PLAN
S1.01	SITE STRUCTURES
S1.02	SITE STRUCTURES
S1.03	SITE STRUCTURES
S2.01	FOUNDATION and MAIN FLOOR FRAMING PLAN - SOUTH
S2.02	FOUNDATION and MAIN FLOOR FRAMING PLAN - NORTH
S2.03	ROOF FRAMING PLAN - SOUTH
S2.04	ROOF FRAMING PLAN - NORTH
S3.01	BRACED FRAME ELEVATIONS
S3.02	BRACED FRAME ELEVATIONS
S3.03	BRACED FRAME ELEVATIONS
S4.01	FOUNDATION DETAILS
S4.02	FOUNDATION DETAILS
S4.03	FOUNDATION DETAILS
S4.04	FOUNDATION DETAILS
S4.05	STEEL DETAILS
S4.06	ROOF DETAILS
S4.07	ROOF DETAILS
S4.08	ROOF DETAILS
S4.09	MISC DETAILS
S4.10	SFRS DETAILS
S4.11	SFRS DETAILS
S5.01	SITE STRUCTURE DETAILS
S5.02	SITE STRUCTURE DETAILS
S5.03	SITE STRUCTURE DETAILS
S5.04	SITE STRUCTURE DETAILS
S6.01	EQUIPMENT PADS - FOUNDATION / ELEVATIONS AND DETAILS
S6.02	EQUIPMENT PADS - FOUNDATION / ELEVATIONS AND DETAILS
S6.03	EQUIPMENT PADS - FOUNDATION / ELEVATIONS AND DETAILS
S6.04	EQUIPMENT PADS - FOUNDATION / ELEVATIONS AND DETAILS

ZERVAS
ARCHITECTURE | INTERIOR DESIGN
zervasgroup.com
209 Prospect Street
Bellingham, WA 98225
360.734.4744

KINGWORKS STRUCTURAL ENGINEERS
600 Dupont St, Suite B
Bellingham, WA 98225
360.714.8260
www.king-works.com

DANIEL DAVIS LINKHART — STATE OF WASHINGTON — 41390 — STRUCTURAL ENGINEER — PROFESSIONAL ENGINEER — 1/26/24

DIGITAL SEAL ON PDF FILE

City of Puyallup
Development & Permitting Services
ISSUED PERMIT
Building | Planning | Engineering | Public Works | Fire | Traffic

100% CD SET

REV	ISSUED FOR	Date

PLAN NORTH

SCALE:

PSE - OPERATIONAL TRAINING CENTER

STRUCTURAL NOTES

PROJECT#.	21239
DRAWN BY:	GK
CHECKED BY:	DL
DATE ISSUED:	1/26/24

S0.01

PRINT. 1/22/2024 9:51:52 AM

© 2024

21239

Autodesk Docs://7222 - 5111 - PSE North Bend Precon Design/23073IKW21239 Zervas PSE OTC - Struct - r22.rvt

1/22/2024 9:51:55 AM

Prior to installation:
Review anchor manufacturer's ESR report and install the product per the evaluation. If special inspection(s) are required - the final special inspection report must be on site during City inspections.

-- ANCHORAGE TO CONCRETE OR MASONRY --

1 MATERIALS (unless noted otherwise in the drawings)
- Concrete or grout must cure for a minimum of 21 days prior to drilling any holes or placing post-installed anchors.
- Anchor type shall be according to the drawings. All post-installed anchors installed in concrete shall have ICC-ES reports demonstrating IBC compliance for use in cracked concrete and for seismic loading. Substitutions not permitted without written permission by KW.
- Pre-approved Epoxy for post-installed threaded rod or reinforcing in concrete base material: HILTI HIT-RE 500 V3 or Simpson SET-3G.
- Pre-approved Epoxy for post-installed threaded rod or reinforcing in solid grouted CMU base material: HILTI-HY 70.
- Pre-approved "Expansion Anchors" in concrete base material: HILTI Kwik-Bolt TZ or Simpson Strong-Bolt 2, or DEWALT/Powers Power-Stud+ SD2.
- Pre-approved "Expansion Anchors" in solid grouted CMU base material: HILTI Kwik-Bolt TZ or Simpson Strong-Bolt 2, or DEWALT/Powers Power-Stud+ SD1.
- Pre-approved "Screw Anchors" in concrete base material: HILTI HUS-EZ or Simpson Titen HD or DEWALT/Powers Screw-Bolt+.
- Pre-approved "Screw Anchors" in solid grouted CMU base material: HILTI HUS-EZ or Simpson Titen HD or DEWALT/Powers Wedge-Bolt+.
- Pre-approved "Powder Actuated Fasteners" in concrete or CMU base material: HILTI or approved equal, with diameter/type per the Structural Drawings (0.145"Ø UON).
- Post-installed or Cast-in-Place Threaded Rod (Anchor): ASTM A36
- Post-installed Reinforcing: ASTM A615 Grade 60

2 EMBEDMENT: Anchor embedment in base material shall be per the drawings, which shall govern over the typical values shown below. Where not otherwise indicated, provide embedment as follows:
- Epoxy to Concrete: Min Embed = 12 x (Rod/Bar Ø) for 5/8"Ø (#5) or smaller, 14 x (Rod/Bar Ø) for 3/4"Ø (#6) or larger
- Epoxy to Solid-Grouted CMU: Min Embed = 9 x (Rod/Bar Ø)
- Expansion Anchor to Concrete: Min Embed = 8 x (Anchor Ø)
- Expansion Anchor to Solid-Grouted CMU: Min Embed = 7.5 x (Anchor Ø)
- Screw Anchor to Concrete: Min Embed = 9 x (Anchor Ø)
- Screw Anchor to Solid-Grouted CMU: Min Embed = 7.5 x (Anchor Ø)
- PAF to Concrete or CMU: Min Embed = 1 1/4", Min Edge Distance = 3"
- PAF to Structural Steel: Point of PAF shall penetrate through base steel where base steel thickness is 1/2-inch or less. Where base steel thickness is greater than 1/2-inch, point penetration shall be 1/2-inch minimum.
- Cast-In-Place Anchor: Min Embed = 9" to top of embedded washer or hook

3 INSTALLATION: Post-installed anchor hole diameter, drilling depth, cleaning and installation procedure shall be in accordance with the current Manufacturer's Printed Installation Instructions (MPII) provided in the ICC/ES report. Holes shall be drilled with rotohammer equipment. Core-drilled holes are not permitted unless specifically noted otherwise.

4 COLD-WEATHER INSTALLATION: Do not use epoxy or adhesive anchors outside of their rated temperature range. Contact the Structural Engineer for alternate if the base material temperature may be less than 40 degrees during installation or curing.

5 CAST-IN-PLACE ANCHORS: Cast-in-place anchors shall have nut and washer at embedded end, UON. Anchors shall be affixed to the form to prevent movement during pouring, vibration, or set-up and shall not be “stabbed” into wet concrete or grout. Verify adequate length of exposed thread to fully engage all attached work.

6 FINISHES: All anchors used at exterior, or where subject to moisture, or where in contact with pressure treated wood, shall be hot-dip galvanized per ASTM A153 or stainless steel, including matching washers and nuts.

7 ANCHOR PLACEMENT IN CMU BASE MATERIAL: Where anchors are installed in face-of-wall condition, no holes shall be permitted within vertical (head) joints nor within 1 1/2" horizontal each way of head joints (exception: HILTI HIT-HY 70 may be used in or near fully-mortared head joints). Where anchors installed in top-of-wall condition, holes shall be drilled into grouted cores only (do not drill into head joints or block shell). Notify KW of any potential conflicts with head joints prior to shop drawing submittal. Anchors in hollow (ungrouted) CMU cells are not permitted UON.

8 REINFORCEMENT LOCATIONS: All post-installed anchors shall be located to avoid drilling into reinforcement, unless specifically approved by the Engineer. Reinforcement shall be placed with consideration for locations of post-installed anchors. Do not damage reinforcing during drilling operations.

-- STRUCTURAL STEEL --

1 REFERENCED STANDARDS: Fabrication, erection and dimensional tolerances of structural steel members shall be in accordance with AISC 303-16 “Code of Standard Practice for Steel Buildings and Bridges" and ASTM A6.

2 MATERIALS (unless otherwise noted on drawings)
- Wide Flange and WT shapes: ASTM A992, fy=50 ksi.
- Hollow Structural Sections (HSS): A500 Grade B, Rectangular fy=46 ksi, Round fy=42 ksi.
- Pipe Sections: A53 Grade B, fy=35 ksi.
- Bolts: A325(-X or -N or -SC per details) Type 1 high strength bolts with A563 nuts and F436 washers unless noted otherwise.
- Welding Electrodes: E70XX
- Anchor Rods: ASTM F1554 Grade 36 (see drawings for braced frame anchor rods)
- Headed Studs: ASTM A108 Grade 1010 - 1020 (Type 2, Fu=60 ksi min)
- Angles / Channels / Plates / Rods / Miscellaneous: ASTM A36

3 WELDING: All welding to be performed by qualified welders and shall conform to A.W.S. D1.1.

4 GALVANIZING: All steel elements and fasteners exposed to the exterior shall be hot-dip galvanized in accordance with ASTM A153/A123, except where a suitable exterior-grade paint system is indicated by the Architect.

5 GALVANIZING REPAIR: Repair all damage to hot-dip galvanized coating by hot-stick or high-zinc paint method in accordance with ASTM A780. Where welding of galvanized steel is required, all galvanizing on the area of steel to be welded, plus 3/4-inch each side of the welded area, shall be ground off prior to welding; affected area shall be repaired per ASTM A780.

-- STRUCTURAL STEEL --

6 PRIMING: All structural steel and miscellaneous metals shall be prime painted with minimum one (1) shop coat of primer (zinc-rich primer at exterior applications), except where hot-dip galvanized or specified otherwise by the architect. Touch up all disturbed areas.

7 PAINT SYSTEM: Paint system, where required, shall be per the Architect. Touch up all disturbed areas.

8 ERECTION: Contractor shall comply with all current OSHA/WISHA requirements concerning steel erection. This may require additional bolts, shims, guys, bracing, and other elements that are not detailed in the Contract Documents but remain the Contractor's responsibility to implement.

9 AESS: All steel designated as "AESS" (Architecturally Exposed Structural Steel) shall conform to Section 10 of the AISC Code of Standard Practice for Steel Buildings and Bridges.

10 BOLT SPECIFICATION: All bolted connections shall conform to the current "RCSC Specification for Structural Joints Using High-Strength Bolts". "-SC" bolts shall be approved twist-off tension-control type per ASTM F1852 or shall utilize compressible-washer-type direct tension indicators per ASTM F959.

11 BOLT INSTALLATION: Bolts shall be snug-tightened (-ST) unless noted as "-SC". "-ST" bolts shall be tightened as needed to bring all plies of the connection into firm contact, achieved by a few impacts of an impact wrench or the full effort of an iron worker using an ordinary spud wrench. "-SC" bolts shall be pretensioned with Class A faying surfaces per the RCSC Spec.

12 BOLT HOLES: Bolt holes in steel shall be 1/16" larger than bolt diameter, except where specifically detailed otherwise.

13 GROUT: Grout for baseplates, sleeves, and embedded steel shall be an approved nonshrink cementitious grout containing natural aggregates delivered to the job site in factory prepackaged containers requiring only the addition of water. The minimum 28-day compressive strength shall be at least 1000 psi higher than the supporting concrete strength, UON. Grout shall be mixed, applied, and cured strictly in accordance with the manufacturer's printed instructions. For grouting under base plates, grout shall be proportioned as a flowable mix. When a flowable mix does not provide the required strength, an epoxy grout shall be used. Grout thickness shall be per the typical details.

-- SEISMIC FORCE RESISTING SYSTEM (STEEL) --

1 SCOPE: The Seismic Force Resisting System (SFRS) includes all buckling-restrained braces (BRBs), columns and beams connected to BRBs, Drag Struts (DS), and any other members indicated as SFRS on the drawings. All connections between these elements shall also be considered part of the SFRS.

2 REFERENCED STANDARDS: SFRS steel members and connections shall comply with ANSI/AISC 341-16 (and 358-16 where applicable).

3 WELDS: All welds used in the SFRS shall be considered "demand critical" and shall be performed in strict adherence to ANSI/AISC 341-16 (and 358-16 where applicable), including but not limited to conformance to a written welding procedure specification (WPS) per AWS D1.1.

4 QUALITY ASSURANCE PLAN: Contractor and special inspection agency shall conform to all requirements of ANSI/AISC 341-16 Chapter J.

5 PROTECTED ZONES: See the drawings for portions of steelwork classified as "protected zones". Within the protected zone, discontinuities created by fabrication or erection operations, such as tack welds, erection aids, air-arc gouging and thermal cutting shall be repaired as required by the engineer of record. Welded, bolted, screwed or shot in attachments for perimeter edge angles, non-bearing walls, exterior facades, duct work, piping, or other construction shall not be placed within the protected zone except as specifically indicated.

-- OPEN WEB STEEL JOISTS (OWSJ's) --

1 REFERENCED STANDARD: Open web steel joists shall conform to SJI 100-2015 Standard Specifications, 44th ed.

2 BRIDGING: Design, provide, and install bridging in accordance with the SJI Standard Specification. Provide and install anchorage of each bridging line to structural wall per the typical details. Provide and install diagonal bridging where required. All bridging lines and bridging anchorage shall be clearly indicated in the submitted shop drawings.

3 BRIDGING LOCATIONS: Bridging is not shown on the structural plans; bridging locations shall be per the supplier. Where bridging lines are indicated on the structural drawings, locations and quantity shown are approximate. Final locations, sizes, and quantities shall be per the supplier in accordance with the SJI Standard Specifications.

4 ROOF OPENINGS: See drawings for typical requirements at roof openings. All roof opening locations shall be per the structural drawings, or where not specifically shown, shall be submitted to the Architect for approval.

5 DEFLECTION: Deflection of joists due to design snow load shall not exceed the criteria shown in the drawings.

6 ERECTION: Erection stability and handling shall be the sole responsibility of the contractor, and shall be performed in accordance with state regulations and the SJI Standard Specifications. Contractor shall comply with all OSHA/WISHA requirements for steel erection. This may require erection bolts and other miscellaneous items that are not shown on the Contract Drawings but remain the Contractor's sole responsibiilty.

7 BOLT HOLE COORDINATION: Where OWSJ's utilize bolted end connections (for erection purposes or otherwise), Contractor shall coordinate all bolt hole locations and sizes prior to the structural steel submittal.

8 MEP COORDINATION: See General Notes for Contractor responsibilities. Joist web layout shall remain consistent along each run of joists as required to facilitate straight runs of ductwork occurring within the web clear space.

9 CAMBER: Typical joists shall have SJI-specified camber. Where "Reduced Camber" [RC] is indicated on the plans, the OWSJ camber shall be two-thirds (2/3) the SJI-specified camber.

-- STEEL DECK --

1 REFERENCED STANDARD: Deck shall be fabricated and installed in accordance with SDI Short Form Specifications and SDI Code of Standard Practice (COSP17)

2 MATERIALS
- Exposed metal roof deck shall be AEP Span HR-36 with gage per the drawings.
- 3" steel roof deck shall be Type N with 24-inch wide typical profile (Verco N-24 or approved equal) and gage per the drawings.
- All deck shall conform to ASTM A446 with minimum yield strength of 33 ksi.

3 FINISHES: Deck shall be painted or galvanized as specified by the Architect. Where the decking is exposed to exterior humidity and/or moisture, finish shall be galvanized G90.

4 ALTERNATES: Alternate deck products submitted for approval shall meet or exceed the span and diaphragm strength and stiffness properties of the referenced (basis of design) Verco products.

5 CONTINUITY: Deck shall be installed with minimum 2-span condition for any piece, uon.

6 END SUPPORT: Ends of each decking piece shall occur over structural supports as indicated in the drawings. Provide 2" minimum end and edge overlap over structural support, uon.

7 FASTENING: Fastening at supports and sidelaps shall be per the typical details.

8 WELDING: All welding to be performed by qualified welders in conformance to AWS D1.3.

9 CONSTRUCTION LOADS: Composite deck is designed to support the indicated loads only after concrete has reached design strength. Ensure that construction loads do not exceed the capacity recommended by the deck manufacturer for an unshored non-composite (prior to concrete achieving design strength) condition, or provide temporary shoring as required to support loads that exceed this capacity. Under no circumstances shall any loads be applied that exceed the rated capacity of the floor or roof deck.

10 BURN-THROUGHS: Contractor shall review the deck installation and notify the Architect and joist supplier of any burn-throughs of OWSJ top chords. Repair all burn-throughs per OWSJ manufacturer’s recommendations.

-- COLD-FORMED STEEL FRAMING - CONTRACTOR DESIGNED --

1 REFERENCED STANDARD:All work shall conform to AISI S100-16.

2 SCOPE AND GENERAL REQUIREMENTS: All cold-formed steel elements on this project are Contractor-designed. Exterior studs are non-bearing and shall be 6-inch depth unless noted otherwise. Interior studs are non-bearing and shall be of depth indicated by the Architect.

3 DESIGN RESPONSIBILITY: The Contractor shall retain a Specialty Component Engineer (SCE) for design of all exterior and interior cold-formed steel stud walls, parapets, soffits, and ceilings. Design shall include all components required for load resistance and stability, including but not limited to: bracing, bridging, bridging anchorage, accommodation of openings and special conditions, and connections to primary structure. See the "Deferred Submittals" section of these notes for additional requirements.

4 DESIGN LOADS: Exterior wall component and cladding wind pressures are indicated elsewhere in these drawings. Seismic loads shall be determined per ASCE 7-16. Interior walls shall be designed for 5 PSF (ASD) minimum horizontal pressure for typical walls, 7.5 PSF (ASD) for elevator shafts. Other loads may be indicated elsewhere in these drawings. Any MEP, fixture, or other miscellaneous loads to be supported by steel stud walls shall be coordinated by the Contractor. In all cases, meet or exceed the load requirements of ASCE 7-16.

5 DEFLECTION CRITERIA: Wind or seismic deflection shall not exceed span times (1/360) where brittle finishes occur, (1/240) elsewhere.

6 CONNECTIONS: Connections of cold-formed steel to primary structure shall satisfy the following requirements:
- Account for vertical structural deflection of 1.0 inches maximum downward and 1.0 inches maximum upward due to live, snow, and/or wind loading. Install after all dead loads are in place to account for construction tolerances.
- Wall connections accounting for vertical structural deflection shall utilize slotted tracks and/or slotted clips as required and in accordance with any schematic details shown in the Structural Drawings.
- At exterior walls only, account for horizontal structural drift of 1.0 inches each direction due to seismic loads. “Drift type” connections with slotted holes parallel to roof edge shall be used according to manufacturer instructions.
- Wall connections shall not induce torsional or unbalanced stresses in structural members unless specifically detailed as such in the Structural Drawings. Braces, reinforcing, and/or ties shall be designed and supplied by the Contractor, as required to resolve all load eccentricities and negate torsional effects in all structural members.
- Horizontal and vertical reactions from all wall connections and related work shall be clearly indicated in the submittal package for review by the Structural Engineer for effects on the primary structure. Contractor shall also coordinate these reactions with the designs of any other Deferred Submittal components.

7 SCREWS: All screws shall be self-tapping and self-drilling in compliance with ASTM C1513, SAEJ78, and ICC-ES AC118.
- Screws shall have a Type II coating in accordance with ASTM B633 and have tested resistance to hydrogen embrittlement.
- Steel-to-steel screws shall have a minimum projection of 3 threads through the last joined ply of material. No gap shall be permitted between joined plies.
- Screws shall have a minimum center to center spacing and edge distance of three times the screw diameter unless noted otherwise on the drawings.
- Tighten screws per manufacturer recommendations. Stripped screws or holes are to be considered ineffective and shall be replaced with screws of the next larger diameter.

-- WOOD FRAMING --

1 REFERENCED STANDARD: All work shall conform to 2018 IBC unless otherwise indicated.

2 MATERIALS (unless otherwise noted in the drawings)
- Posts / Beams: Hem Fir #1
- Solid Sawn Studs: Hem Fir #2
- Sills / Plates: Equal to stud grade
- Joists / Rafters: Hem Fir #2
- Rimboard: LSL or LVL, 1.5E min
- Blocking / Bridging: Hem Fir 'Stud'
- Glulam Beam (GLB): 24F-1.8E (-V4 Typical, -V8 at Cantilever or Continuous only) per AITC 117
- Glulam Post or Column: Combination 3 per AITC 117
- Laminated Veneer Lumber (LVL): 2.0E min (1 3/4" thickness), 1.8E min (1 1/2" thickness), 1.5E min (1 1/4" thickness)
- Bolts / Lags: ASTM A36 or A307, hex-head, washer under head & nut

3 MOISTURE CONTENT: All sawn lumber, including heavy timber, shall be kiln-dried to a maximum moisture content of 19%. For pressure-treated framing, kiln-drying shall occur after treatment.

4 NAILS: Nail sizes shown are 'common' (not 'box') uon. 8d = 0.131"x2.5", 10d = 0.148"x3", 12d = 0.148"x3.25", 16d = 0.162"x3.5". Typical nailing not otherwise shown in the drawings shall be per IBC Table 2304.10.1. Where nailing occurs in two or more rows, the on-center spacing indicated in the drawings shall be for each row. Where on-center nail spacing for a single row is less than 6" (for 12d and larger) or less than 4" (for 10d and smaller), stagger each row of nails into two rows offset by 1/2" min. All nails shall maintain 3/8" min to framing or sheathing edges.

5 HOLES: Bolt holes in wood for through-bolt connections shall equal bolt diameter plus 1/16" maximum, 1/32" minimum. Bolt holes in steel fixtures shall be per the steel section of these notes. Wood screws and lag screws (lag bolts) shall be hex head and shall have predrilled pilot holes equal to approximately 60% of the fastener diameter (70% for 7/8" and larger lag screws) and shall be installed by turning; do not hammer into hole. Soap lubrication on threads is acceptable. Provide cut washer beneath all hex heads and nuts uon.

6 SPLITTING: Though very tight nail and screw spacings are used in many locations on this project, splitting of wood members by driving nails or screws is not acceptable. If splitting occurs, or if splitting may occur as wood dries in place, predrill all holes as required to approximately 60% of the nail or screw diameter. Omission of predrilling for fasteners is at the Contractor's sole risk, and as such, all split members shall be replaced at the Contractor's sole expense.

7 ALTERATIONS: Do not notch any structural wood members. See typical detail for allowable hole locations and sizes (for mechanical or electrical utility passage).

8 STUD WALLS: All stud walls shown on the structural plans are structural walls and shall be constructed per the structural notes and details of these drawings. Typical structural walls are 2x6@16" on center, unless noted otherwise. Typical structural walls are constructed with single sill and double top plate.

9 STUD WALL BRACING: All bearing walls rely on GWB and/or sheathing to brace the studs against buckling. Where GWB or sheathing is not provided on at least one face of studs, provide full depth blocking at 4'-0" max on-center in each stud bay, in addition to diagonal bracing for full length of wall (Simpson WB in "X"-configuration at approximately 45-deg, install per catalog, typ uon).

10 SISTERING (BUILT-UP MULTIPLE STUDS AND BLOCKING): Where multiple 2x studs or blocking occur, each added ply after the first shall be sistered to the previous plies by face nailing. At shearwalls, sistering nails for studs or blocking shall be 0.148"x3" at spacing equal to 'EN' per schedule. At non-shearwall multiple studs, sistering nails shall be 0.148"x3" at 12" on-center, uon. Sistering nails shall be staggered in all instances.

11 RAFTERS/JOISTS: Provide full-depth blocking or bridging lines at no less than 8'-0" on center between supports. At bearing supports bear rafters and joists 2" minimum on plates or beams, uon. At other supports provide hangers per the typical details. Where no detail applies use as a minimum Simpson LU series face mount hangers. Provide a doubled joist (minimum) beneath each parallel wall, including partition walls.

12 BEAMS: Bear beams full length and width on supporting wall plates and/or posts, unless shown otherwise per typical details. Provide glulam beam camber equal to 3500-foot radius for all simple span beams, except where special camber is indicated on the plans; install with upward curvature (highest at midspan). Do not camber cantilever beams unless specifically noted. Beams exposed to view shall be Architectural Appearance grade in accordance with AITC 110, with finish per the Architect.

13 POSTS: Unless noted otherwise, provide Simpson BC or AC caps at all post to beam and post to beam (below) connections. At post to concrete provide Simpson ABU or CB post bases, uon. Posts in walls may bear on the sill with connection hardware per typical details. At wood or steel posts/columns continuous through floor framing, block tight all-around at floor to prevent lateral movement or buckling.

14 CONNECTORS: Connectors and/or fasteners called out by letters & numbers in the drawings shall be manufactured by Simpson Strong-Tie, or approved equal. All connecting hardware shall be installed per the Manufacturer’s recommendations and requirements, as per current catalog and related publications. Fill all fastener holes with the fastener type (diameter and length) indicated by the Manufacturer, uon. Where light-gage connector occurs at steel column, weld 1/8" all-around, uon.

15 PRESSURE TREATMENT: Except where specifically noted otherwise, the following member types shall be pressure treated in accordance with the following guidelines, in addition to any such members noted in the plans or details. Treatment shall be with waterborne preservatives in accordance with AWPA Standard U1 to the requirements of the "Use Category" as described below. Treatment shall be required regardless of use of sill seal or flashings.
- Interior wood against concrete or masonry: AWPA UC2
- Wood exposed to exterior, humidity, or within 8” of soil: AWPA UC3B
- Wood in contact with ground: AWPA UC4B
- Laminated Veneer Lumber: Pacific Woodtech PWT LVL UCB3
- Borate-treated lumber is acceptable in locations where protected from rainfall or other potential repeated moisture, such as sill plates in an enclosed wall cavity and interior ledgers.

16 FIELD TREATMENT: Field treat all cuts, ends, and holes in pressure treated lumber with copper naphthenate applied per manufacturer’s recommendations.

17 EXTERIOR WOOD PROTECTION: Provide flashings, sealants and finishes per the Architect in order to protect all exterior wood surfaces and post/beam ends from moisture.

18 GALVANIZING: All steel components, hardware, or fasteners for wood framing members exposed to moisture, high humidity, or in contact with pressure treated lumber shall be hot-dip galvanized per ASTM A153. Light gage connectors shall be galvanized per ASTM A653, G185 minimum (Simpson “Z-max” or approved equal). The above described galvanizing requirements specifically include, but are not limited to: nails, screws, bolts, washers, nuts, anchor bolts, threaded rods, cast-in-place and post-installed anchors, Simpson hardware, and weldments. (Exception: not required for SBX/DOT borate-treated wood protected from weather.)

-- WOOD FRAMING --

19 MEMBRANE PROTECTION: Where specified steel hardware in contact with pressure treated wood is unavailable in HDG or G185 finish, Grace Vycor (or approved eq) membrane shall be placed per manufacturer's recommendations to isolate the hardware from the treated wood. HDG fasteners shall be used in such instances.

20 SHEATHING: Place roof and floor sheathing with face grain oriented in the direction of span. Offset adjacent rows of sheathing panels by 24" minimum, with all panel ends bearing on joists, beams, trusses or walls. Place cants or crickets over continuous basic roof sheathing with drilled vent holes per the Architect. Install wall sheathing in either the horizontal or up-right orientation. Adjust all sheathing layouts so that no panel is less than 24" in length or width. Where edges are not required to be blocked per schedule, provide Simpson PSCA clips at spacing per catalog recommendation. All sheathing shall be APA rated, with type/blocking/fastening per the following schedule. Provide 1/8" gaps between abutting sheet edges, typical.

21 SHEATHING FASTENING: Minimum nailing per the following schedule shall apply at all locations, except where larger nails and/or smaller spacing are required by plans or details. Shearwall nailing is shown by schedule on the plans. Where “boundary nailing” (BN) and/or “edge nailing” (EN) are referenced in these drawings, panel edge values per the schedule shall apply. Blocking for edges shall be 2x4 flat, minimum, unless a greater size is required to avoid splitting. See plans for zones of special nailing requirements.

-- WOOD SHEATHING SCHEDULE --

USE	TYPE	BLOCK EDGES	MIN EDGE NAILING	MIN FIELD NAILING
Shearwalls	15/32" PLY or OSB	Yes	Per SW Sched (EN)	10d @ 12"
Other Sheathed Walls	15/32" PLY or OSB	No	8d @ 6"	8d @ 12"
Floor	23/32" T&G PLY	Yes	10d @ 6" (BN)	10d @ 12"
Roof	15/32" PLY	Yes	8d @ 6" (BN)	8d @ 12"

-- METAL PLATE CONNECTED WOOD TRUSSES (MPCWT's) --

1 REFERENCED STANDARDS: The design, manufacture, and quality assurance of MPCWT shall be in accordance with ANSI/TPI 1-14. In addition, all requirements of 2018 IBC Section 2303.4 shall be satisfied.

2 SUBMITTAL PACKAGE: The truss submittal package provided by the manufacturer shall consist of individual truss design drawings (including cricket overframing), a truss placement diagram, truss member permanent bracing plan and details, any other structural details germane to the trusses, and sealed cover sheet/truss index sheet.

3 DESIGN / PLACEMENT DRAWINGS: The truss design drawings for each individual truss shall include all information required by IBC Section 2303.4.1.1. The truss placement diagram shall be in accordance with IBC Section 2303.4.2.

4 LOADS: Trusses shall be designed by the manufacturer for the following minimum non-superimposed loads, in addition to roof live, snow, seismic and/or wind loads indicated elsewhere in these drawings or notes: Top Chord Dead Load = 15 psf, Bottom Chord Dead Load = 15 psf, Bottom Chord Live Load = 10 psf. See plan and details for additional special loads. Contractor shall coordinate locations and amplitudes of special loads prior to shop drawing submittal.

5 COMPONENT / CONNECTION DESIGN: The Specialty Component Engineer (SCE) is responsible for all the design of all truss components and connections as required to form a fully functional roof system, except where specifically detailed in these drawings.

6 TOP CHORD: Top chord depth shall be no less than indicated in the architectural or structural drawings.

7 DEFLECTION: Deflection of roof trusses shall not exceed L/360 or 1 inch for live or snow load, nor L/240 for total load.

8 PERMANENT BRACING: Truss manufacturer shall design and provide all components required for permanent bracing of the truss system. Permanent bracing shall conform to IBC Section 2303.4.1.2 and the WTCA/TPI “Building Component Safety Information” (BCSI) guide, current edition. The bracing design shall include, but not be limited to: plan layout, bracing sizes, “scabs” or other reinforcement, connections of braces to chords, web members, and supporting structure. The bracing design shall be clearly indicated in the truss submittal package.

9 SPACING: MPCWT spacing indicated on plans shall be considered to be a maximum allowable and shall be decreased as required to meet zones of higher loading (including but not limited to snow drift or mechanical unit loads).

10 MULTI-PLY TRUSSES: Multiple ply (girder) trusses, where required by plan and/or by the manufacturer's engineer, shall be sistered per the manufacturer to ensure equal load distribution between members.

11 MEP COORDINATION: See Specifications and Mechanical Drawings for critical duct locations/sizes that may affect truss profiles and design parameters. General Contractor shall coordinate all such requirements and all special circumstances shall be clearly indicated in the truss submittal package. See General Notes for additional coordination responsibilities.

ZERVAS
ARCHITECTURE | INTERIOR DESIGN
zervasgroup.com
209 Prospect Street
Bellingham, WA 98225
360.734.4744

KINGWORKS STRUCTURAL ENGINEERS
600 Dupont St, Suite B
Bellingham, WA 98225
360.714.8260
www.king-works.com

DANIEL DAVIS LINKHART — STATE OF WASHINGTON — 41390 — REGISTERED PROFESSIONAL ENGINEER — 1/22/24
DIGITAL SEAL ON PDF FILE

City of Puyallup
Development & Permitting Services
ISSUED PERMIT
Building | Planning | Engineering | Public Works | Fire | Traffic

100% CD SET

REV	ISSUED FOR	Date

PLAN NORTH

SCALE:

PSE - OPERATIONAL TRAINING CENTER

STRUCTURAL NOTES

PROJECT#.	21239
DRAWN BY:	GK
CHECKED BY:	DL
DATE ISSUED:	1/26/24

S0.02

PRINT: 1/22/2024 9:51:55 AM

© 2024

PRCNC20240216

1/22/2024 9:51:56 AM

- STRUCTURAL ABBREVIATIONS -

AA	ALL AROUND
AB	ANCHOR BOLT
ADDL	ADDITIONAL
ALT	ALTERNATE
ANCH	ANCHOR (ANCHORAGE)
ARCH	ARCHITECT, ARCHITECTURAL
ATR	ALL-THREAD ROD
BB	BOND BEAM
BCX	BOTTOM CHORD EXTENSION
BF	BOUNDARY FASTENING (PER DTL/SCHED)
BFE	BOTTOM OF FOOTING ELEVATION
BLDG	BUILDING
BLKG	BLOCKING
BM	BEAM
BN	FLOOR/ROOF BOUNDARY NAILING
BOD	BOTTOM OF DECK
BOT	BOTTOM
BRG	BEARING
BSMT	BASEMENT
BTWN	BETWEEN
C-C or C/C	CENTER-TO-CENTER
CANT	CANTILEVER
CBORE	COUNTERBORE
CFS	COLD FORMED STEEL
CIP	CAST IN PLACE
CJ or CJT	CONTROL JOINT
CJP	COMPLETE JOINT PENETRATION
CL	CENTERLINE
CLG	CEILING
CLR	CLEAR
CMU	CONCRETE MASONRY UNIT
COL	COLUMN
COMP	COMOSITE
CONC	CONCRETE
CONN	CONNECTION
CONSTR	CONSTRUCTION
CONSTR JT	CONSTRUCTION JOINT
CONT	CONTINUOUS, CONTINUED
CONTR	CONTRACTOR
CSINK	COUNTERSINK
CTR	CENTER
D	DEPTH
DAHB	DOWEL ALL HORIZONTAL BARS
DAVB	DOWEL ALL VERTICAL BARS
DBL	DOUBLE
DEG	DEGREES
DET or DTL	DETAIL
DIA	DIAMETER
DIAG	DIAGONAL
DIAPH	DIAPHRAGM
DIM	DIMENSION
DL	DEAD LOAD
DLC	DEAD LOAD CAMBER
DN	DOWN
DO	DITTO (SAME AS ABOVE or ADJACENT)
DS	DRAG STRUT
DWG	DRAWING
DWLS	DOWELS
E	EAST
(E) or EXIST	EXISTING
EA	EACH
EA END	EACH END
EF	EDGE FASTENING (PER SCHED)
EL or ELEV	ELEVATION (or ELEVATOR)
ELEC	ELECTRICAL
EN	WALL EDGE NAILING
EOS or E.O.S.	EDGE OF STEEL
EPS	EXPANDED POLYSTYRENE
EQ	EQUAL
EQ SP	EQUALLY SPACED
EQUIP	EQUIPMENT
ERECT	ERECTION
EW	EACH WAY
EXP	EXPANSION
EXP ANCH	EXPANSION ANCHOR
EXP BOLT	EXPANSION BOLT

- STRUCTURAL ABBREVIATIONS -

EXP JT or EJ	EXPANSION JOINT
EXT	EXTERIOR
FB	FLAT BAR
FD	FLOOR DRAIN
FDN	FOUNDATION
FF	FIELD FASTENING (PER SCHED)
-	or FINISHED FLOOR
FIN	FINISH
FLR	FLOOR
FMG or FRMG	FRAMING
FOC	FACE OF CONCRETE
FOS	FACE OF STEEL (or STUD)
FS	FAR SIDE
FT	FOOT (FEET)
FTG	FOOTING
FV	FIELD VERIFY
GA	GAUGE
GALV	GALVANIZED
GB	GRADE BEAM
GC	GENERAL CONTRACTOR
GEO	GEOTECHNICAL ENGINEER
GL	GLULAM
GLB	GLULAM BEAM
GS	GRIND SMOOTH
GWB	GYPSUM WALL BOARD
HDG	HOT-DIP GALVANIZED
HDR	HEADER
HK	HOOK
HNGR	HANGER
HORIZ or (H)	HORIZONTAL
HSS	HOLLOW STRUCTURAL SECTIONS
HT or H	HEIGHT
ID	INSIDE DIAMETER
IF	INSIDE FACE
IN	INCH (INCHES)
INT	INTERIOR
JBE	JOIST BEARING ELEVATION
JH	JOIST HEADER
JST	JOIST
JT or JNT	JOINT
K	KIP (1000 POUNDS)
KO	KNOCK OUT
KW	KING-WORKS
L	ANGLE
LB	POUND
LG	LENGTH, LONG
LGS	LIGHT GAGE STEEL
LL	LIVE LOAD
LLBB	LONG LEG BACK-TO-BACK
LLH	LONG LEG HORIZONTAL
LLV	LONG LEG VERTICAL
LOC	LOCATION
LONG	LONGITUDINAL
LSL	LONG SLOTTED (HOLE)
-	or LAMINATED STRAND LUMBER
LT WT	LIGHT WEIGHT
LVL	LAMINATED VENEER LUMBER
LW	LONG WAY
MAS	MASONRY
MAX	MAXIMUM
MCJ	MASONRY CONTROL JOINT
MECH	MECHANICAL
MEMB	MEMBRANE
MEZZ	MEZZANINE
MFR	MANUFACTURER
MIN	MINIMUM
MISC	MISCELLANEOUS
MONO	MONOLITHIC
MPCWT	METAL PLATE CONNECTED WOOD TRUSS
MTL	METAL
(N)	NEW
N	NORTH
NIC	NOT IN CONTRACT
NO	NUMBER
NS	NEAR SIDE

- STRUCTURAL ABBREVIATIONS -

NS/HS	NON-SHRINK HIGH STRENGTH
NTS	NOT TO SCALE
OC or O/C	ON CENTER
OCBF	ORDINARY CONCENTRIC BRACED FRAME
OD	OUTSIDE DIAMETER
OF	OUTSIDE FACE
OH	OVERHEAD
OMF	ORDINARY MOMENT FRAME
OOP	OUT-OF-PLANE
OPP	OPPOSITE
OSB	ORIENTED STRAND BOARD
OVS	OVERSIZE
OWJ	OPEN WEB WOOD CHORD JOIST
PAF	POWDER ACTUATED FASTENER
PAR	PARALLEL
PC	PRECAST or PIECE
PERP	PERPENDICULAR
PL	PLATE
PN	WALL PLATE ATTACHMENT
PROJ	PROJECT
PS-B	PANEL SCREWS - TYP BEARING
PS-D	PANEL SCREWS - DIAPH EDGE
PSF	POUNDS PER SQUARE FOOT
PSI	POUND PER SQUARE INCH
PSL	PARALLEL STRAND LUMBER
PT	PRESSURE TREATED or POINT or POST-TENSIONED
PVC	POLYVINYL CHLORIDE
R	RADIUS, REACTION
RC	REDUCED CAMBER
R/W	REINFORCED WITH
RD	ROOF DRAIN
REF	REFERENCE
REINF	REINFORCEMENT
REQD	REQUIRED
REV	REVERSE, REVISION
RF	ROOF
RO	ROUGH OPENING
RTU	ROOF TOP UNIT
S	SOUTH
SC	SLIP CONTROL
SCHED	SCHEDULE
SECT	SECTION
SF	SQUARE FOOT/FEET
SHT	SHEET
SHTG	SHEATHING
SIM	SIMILAR
SIP	STRUCTURAL INSULATED PANEL
SL	SNOW LOAD or SLOPING
SLBB	SHORT LEG BACK-TO-BACK
SN	STRUCTURAL NOTES
SOG	SLAB ON GRADE
SP @	SPACED AT
SPA	SPACES
SPEC	SPECIFICATIONS
SPECD	SPECIFIED
SCE	SPECIALTY COMPONENT ENGINEER
SSL	SHORT SLOTTED (HOLE)
STD	STANDARD
STIFF	STIFFENER
STIR	STIRRUPS
STL	STEEL
STL JST	STEEL JOIST
STRUCT	STRUCTURAL
SW	SHEARWALL
SWEP	SHEARWALL ENDPOST
SYM	SYMMETRICAL
T&B	TOP & BOTTOM
TBE	TOP OF BEAM ELEVATION
TCX	TOP CHORD EXTENSION
TEMP STL	TEMPERATURE STEEL
TF	TRACK FASTENING (PER TYP DTL)
TFE	TOP OF FOOTING ELEVATION
TL	TOTAL LOAD
TO or T/	TOP OF
TOB	TOP OF BEAM
TOS	TOP OF SLAB

- STRUCTURAL ABBREVIATIONS -

TOW	TO OF WALL
TRANS	TRANSVERSE
TSE	THICKENED SLAB EDGE
TYP	TYPICAL
UNO or UON	UNLESS NOTED OTHERWISE
VERT or (V)	VERTICAL
VNR	VENEER
W	WIDTH OR WEST
W/	WITH
W/O	WITHOUT
WF	WIDE FLANGE
WHS	WELDED HEADED STUDS
WL	WIND LOAD
WP	WORK POINT
WPA	WATER PROOFING ADMIXTURE
WT	WEIGHT
WWF	WELDED WIRE FABRIC
<	LESS THAN
≤	EQUAL TO OR LESS THAN
>	GREATER THAN
=	EQUAL TO

LEGEND

FX — FOUNDATION MEMBER PER SCHED

ELEVATION STEP ARCH & PER TYP DTLS

HSS8X8X5/8 — COLUMN INITIATING AT THIS LEVEL

CONTD — COLUMN CONTINUING THROUGH THIS LEVEL

COLUMN TERMINATING AT THIS LEVEL

COLUMN ABOVE, LOCATION SHOWN FOR REFERENCE TO FOUNDATION ELEMENTS

BRACE MEMBER EXTENDING UP AND/OR DOWN FROM PLAN LEVEL WHERE SHOWN, SEE ELEVATIONS

BF-X — BUCKLING RESTRAINED BRACED FRAME PER ELEVATIONS

W24X76 (c+Y") [-Q"] / <Z>

BEAM/JOIST
'Y' = INCHES POSITIVE CAMBER AT MIDSPAN
'Q' = TOP OF BEAM TO BOT OF DECK AT CL OF BM - WHERE NOT INDICATED, Q = 6 1/2" AT FLAT BMS, Q= 0" AT SLOPING BMS
'Z' = TOP OF BEAM ELEVATION (NOT SHOWN WHERE SLOPING)

TYP BEAM-TO-COL SHEAR CONNECTION PER 2/S4.05

HIGH LOAD BEAM-TO-COL CONNECTION PER (SFRS) - UPPER ROOF LEVEL 2/S4.11

HIGH LOAD BEAM-TO-COL CONNECTION PER (SFRS) - LOWER ROOF LEVEL 2/S4.11

BEAM-TO-BEAM SHEAR CONNECTION PER 3/S4.05

CANT OR CONT BM OR JST OVER BM PER TYP DTLS

CANT OR CONT BM OR JST OVER COL PER TYP DTLS

BEAM MOMENT CONNECTION PER TYP DTLS

BOT FLANGE BM BRACE PER (SFRS WHERE CONNECTED TO BRBF BEAM)

[1.2k] — MECH UNIT OR OTHER MACHINERY BY OTHERS, CONFIRM SIZE, LOCATION, AND MAX WT.

3 LEGEND
1/4" = 1'-0"

MAX OWSJ DEFLECTION DUE TO LIVE/SNOW/WIND/EQ LOAD (CONSIDERING ASD COMBINATIONS)
L/180, NOT TO EXCEED 2.0"
L/180, NOT TO EXCEED 1.0"

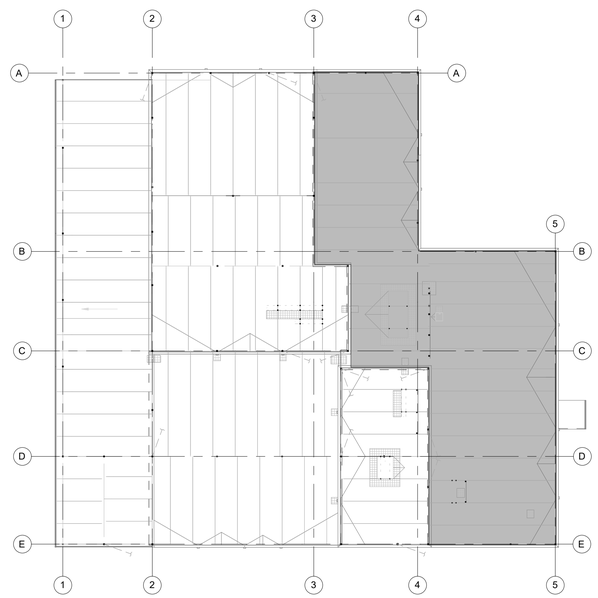

2 ROOF KEY PLAN - DEFLECTION ZONES
1/32" = 1'-0"

WIND KEY PLAN NOTES
1. COMPONENT AND CLADDING WIND PRESSURES SHOWN ARE 0.9D+ 1.0W ("NET LRFD-LEVEL") IN ACCORDANCE WITH ASCE 7-16. MULTIPLY BY 0.6 FOR "ASD-LEVEL" DESIGN PRESSURES.
2. A TRIBUTARY AREA OF 10 SQ FT HAS BEEN ASSUMED IN THE CALCULATION OF THESE PRESSURES. FOR ELEMENTS W/ LARGER TRIBUTARY AREAS, PRESSURES MAY BE REDUCED ACCORDING TO ASCE 7-16.
3. ALL EXTERIOR COMPONENTS AND CLADDING SHALL BE DESIGNED TO ACCOMMODATE THE WORST CASE WIND PRESSURES SHOWN, IN COMBINATION WITH OTHER LOADS INDICATED ELSEWHERE, AS APPROPRIATE PER ASCE 7-16.
4. HIGHER ROOF AND WALL EDGE PRESSURES SHOWN SHALL APPLY AT ALL CORNERS, ROOF EDGES, RIDGES, AND OTHER DISCONTINUITIES.

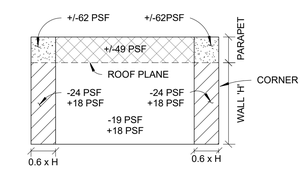

TYP WALL ELEVATION AT PARAPET-
COMPONENT AND CLADDING WIND PRESSURES

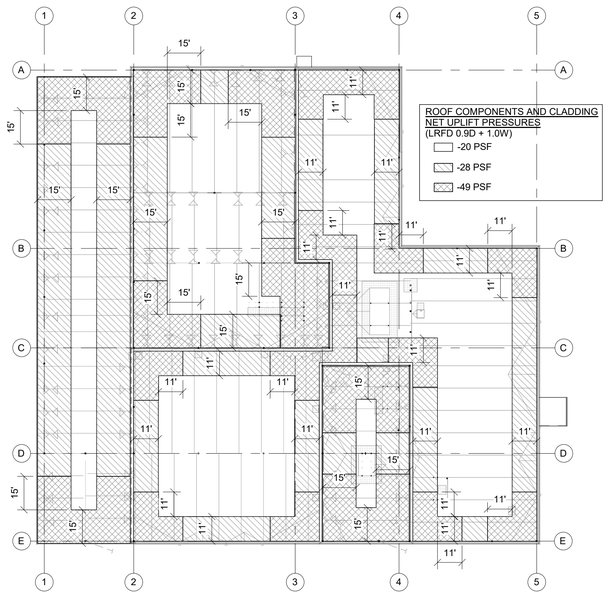

1 COMPONENT & CLADDING WIND UPLIFT KEY PLAN
1/32" = 1'-0"

ZERVAS
ARCHITECTURE | INTERIOR DESIGN
zervasgroup.com
209 Prospect Street
Bellingham, WA 98225
360.734.4744

KINGWORKS STRUCTURAL ENGINEERS
600 Dupont St, Suite B
Bellingham, WA 98225
360.714.8260
www.king-works.com

DANIEL DAVIS LINKHART — STATE OF WASHINGTON — 41390 — STRUCTURAL ENGINEER — PROFESSIONAL ENGINEER — 1/26/24

DIGITAL SEAL ON PDF FILE

City of Puyallup
Development & Permitting Services
ISSUED PERMIT
Building | Planning | Engineering | Public Works | Fire | Traffic

100% CD SET

REV	ISSUED FOR	Date

PLAN NORTH

SCALE: As indicated

PSE - OPERATIONAL TRAINING CENTER

STRUCTURAL MISC

PROJECT#.	21239
DRAWN BY:	GK
CHECKED BY:	DL
DATE ISSUED:	1/26/24

S0.03

PRINT. 1/22/2024 9:51:56 AM

© 2024

21239

Autodesk Docs://7222 - 5111 - PSE North Bend Precon Design/230731KW21239 Zervas PSE OTC - Struct - r22.rvt

1/22/2024 9:51:56 AM

CHAPTER J

QUALITY CONTROL AND QUALITY ASSURANCE

This chapter addresses requirements for quality control and quality assurance.

User Note: All requirements of *Specification* Chapter N also apply, unless specifically modified by these Provisions.

The chapter is organized as follows:

J1. Scope
J2. Fabricator and Erector Documents
J3. Quality Assurance Agency Documents
J4. Inspection and Nondestructive Testing Personnel
J5. Inspection Tasks
J6. Welding Inspection and Nondestructive Testing
J7. Inspection of High-Strength Bolting
J8. Other Steel Structure Inspections
J9. Inspection of Composite Structures
J10. Inspection of Piling

J1. SCOPE

Quality Control (QC) as specified in this chapter shall be provided by the fabricator, erector or other responsible contractor as applicable. Quality Assurance (QA) as specified in this chapter shall be provided by others when required by the authority having jurisdiction (AHJ), applicable building code (ABC), purchaser, owner or engineer of record (EOR). Nondestructive testing (NDT) shall be performed by the agency or firm responsible for Quality Assurance, except as permitted in accordance with *Specification* Section N6.

User Note: The quality assurance plan of this section is considered adequate and effective for most seismic force-resisting systems and should be used without modification. The quality assurance plan is intended to ensure that the seismic force resisting system is significantly free of defects that would greatly reduce the ductility of the system. There may be cases (for example, nonredundant major transfer members, or where work is performed in a location that is difficult to access) where supplemental testing might be advisable. Additionally, where the fabricator's or erector's quality control program has demonstrated the capability to perform some tasks this plan has assigned to quality assurance, modification of the plan could be considered.

J2. FABRICATOR AND ERECTOR DOCUMENTS

1. Documents to be Submitted for Steel Construction

In addition to the requirements of *Specification* Section N3.1, the following documents shall be submitted for review by the EOR or the EOR's designee, prior to fabrication or erection of the affected work, as applicable:

(a) Welding procedure specifications (WPS)

(b) Copies of the manufacturer's typical certificate of conformance for all electrodes, fluxes and shielding gasses to be used

(c) For demand critical welds, applicable manufacturer's certifications that the filler metal meets the supplemental notch toughness requirements, as applicable. When the filler metal manufacturer does not supply such supplemental certifications, the fabricator or erector, as applicable, shall have the necessary testing performed and provide the applicable test reports

(d) Manufacturer's product data sheets or catalog data for shielded metal arc welding (SMAW), flux cored arc welding (FCAW), and gas metal arc welding (GMAW) composite (cored) filler metals to be used

(e) Bolt installation procedures

(f) Specific assembly order, welding sequence, welding technique, or other special precautions for joints or groups of joints where such items are designated to be submitted to the engineer of record

2. Documents to be Available for Review for Steel Construction

Additional documents as required by the EOR in the contract documents shall be available by the fabricator and erector for review by the EOR or the EOR's designee prior to fabrication or erection, as applicable.

The fabricator and erector shall retain their document(s) for at least one year after substantial completion of construction.

3. Documents to be Submitted for Composite Construction

The following documents shall be submitted by the responsible contractor for review by the EOR or the EOR's designee, prior to concrete production or placement, as applicable:

(a) Concrete mix design and test reports for the mix design

(b) Reinforcing steel shop drawings

(c) Concrete placement sequences, techniques and restriction

4. Documents to be Available for Review for Composite Construction

The following documents shall be available from the responsible contractor for review by the EOR or the EOR's designee prior to fabrication or erection, as applicable, unless specified to be submitted:

(a) Material test reports for reinforcing steel

(b) Inspection procedures

(c) Nonconformance procedure

(d) Material control procedure

(e) Welder performance qualification records (WPQR) as required by *Structural Welding Code—Reinforcing Steel* (AWS D1.4/D1.4M)

(f) QC Inspector qualifications

The responsible contractor shall retain their document(s) for at least one year after substantial completion of construction.

J3. QUALITY ASSURANCE AGENCY DOCUMENTS

The agency responsible for quality assurance shall submit the following documents to the authority having jurisdiction, the EOR, and the owner or owner's designee:

(a) QA agency's written practices for the monitoring and control of the agency's operations. The written practice shall include:

(1) The agency's procedures for the selection and administration of inspection personnel, describing the training, experience and examination requirements for qualification and certification of inspection personnel; and

(2) The agency's inspection procedures, including general inspection, material controls, and visual welding inspection

(b) Qualifications of management and QA personnel designated for the project

(c) Qualification records for inspectors and NDT technicians designated for the project

(d) NDT procedures and equipment calibration records for NDT to be performed and equipment to be used for the project

(e) For composite construction, concrete testing procedures and equipment

J4. INSPECTION AND NONDESTRUCTIVE TESTING PERSONNEL

In addition to the requirements of *Specification* Sections N4.1 and N4.2, visual welding inspection and NDT shall be conducted by personnel qualified in accordance with AWS D1.8/D1.8M clause 7.2. In addition to the requirements of *Specification* Section N4.3, ultrasonic testing technicians shall be qualified in accordance with AWS D1.8/D1.8M clause 7.2.4.

User Note: The recommendations of the International Code Council *Model Program for Special Inspection* should be considered a minimum requirement to establish the qualifications of a bolting inspector.

J5. INSPECTION TASKS

Inspection tasks and documentation for QC and QA for the seismic force-resisting system (SFRS) shall be as provided in the tables in Sections J6, J7, J8, J9 and J10. The following entries are used in the tables:

1. Observe (O)

The inspector shall observe these functions on a random, daily basis. Operations need not be delayed pending observations.

2. Perform (P)

These inspections shall be performed prior to the final acceptance of the item.

3. Document (D)

The inspector shall prepare reports indicating that the work has been performed in accordance with the contract documents. The report need not provide detailed measurements for joint fit-up, WPS settings, completed welds, or other individual items listed in the tables. For shop fabrication, the report shall indicate the piece mark of the piece inspected. For field work, the report shall indicate the reference grid lines and floor or elevation inspected. Work not in compliance with the contract documents and whether the noncompliance has been satisfactorily repaired shall be noted in the inspection report.

4. Coordinated Inspection

Where a task is stipulated to be performed by both QC and QA, coordination of the inspection function between QC and QA is permitted in accordance with *Specification* Section N5.3.

J6. WELDING INSPECTION AND NONDESTRUCTIVE TESTING

Welding inspection and nondestructive testing shall satisfy the requirements of the *Specification*, this section and AWS D1.8/D1.8M.

User Note: AWS D1.8/D1.8M was specifically written to provide additional requirements for the welding of seismic force resisting systems, and has been coordinated when possible with these Provisions. AWS D1.8/D1.8M requirements related to inspection and nondestructive testing are organized as follows, including normative (mandatory) annexes:

1. General Requirements
7. Inspection
Annex F. Supplemental Ultrasonic Technician Testing
Annex G. Supplemental Magnetic Particle Testing Procedures
Annex H. Flaw Sizing by Ultrasonic Testing

TABLE J6.1
Visual Inspection Tasks Prior to Welding

Visual Inspection Tasks Prior to Welding	QC Task	QC Doc.	QA Task	QA Doc.
Material identification (Type/Grade)	O	—	O	—
Welder identification system	O	—	O	—
Fit-up of Groove Welds (including joint geometry) –Joint preparation –Dimensions (alignment, root opening, root face, bevel) –Cleanliness (condition of steel surfaces) –Tacking (tack weld quality and location) –Backing type and fit (if applicable)	P/O**	—	O	—
Configuration and finish of access holes	O	—	O	—
Fit-up of Fillet Welds –Dimensions (alignment, gaps at root) –Cleanliness (condition of steel surfaces) –Tacking (tack weld quality and location)	P/O**	—	O	—

** Following performance of this inspection task for ten welds to be made by a given welder, with the welder demonstrating understanding of requirements and possession of skills and tools to verify these items, the Perform designation of this task shall be reduced to Observe, and the welder shall perform this task. Should the inspector determine that the welder has discontinued performance of this task, the task shall be returned to Perform until such time as the Inspector has re-established adequate assurance that the welder will perform the inspection tasks listed.

TABLE J6.2
Visual Inspection Tasks During Welding

Visual Inspection Tasks During Welding	QC Task	QC Doc.	QA Task	QA Doc.
WPS followed –Settings on welding equipment –Travel speed –Selected welding materials –Shielding gas type/flow rate –Preheat applied –Interpass temperature maintained (min/max.) –Proper position (F, V, H, OH) –Intermix of filler metals avoided unless approved	O	—	O	—
Use of qualified welders	O	—	O	—
Control and handling of welding consumables –Packaging –Exposure control	O	—	O	—
Environmental conditions –Wind speed within limits –Precipitation and temperature	O	—	O	—
Welding techniques –Interpass and final cleaning –Each pass within profile limitations –Each pass meets quality requirements	O	—	O	—
No welding over cracked tacks	O	—	O	—

1. Visual Welding Inspection

All requirements of the *Specification* shall apply, except as specifically modified by AWS D1.8/D1.8M.

Visual welding inspection shall be performed by both quality control and quality assurance personnel. As a minimum, tasks shall be as listed in Tables J6.1, J6.2 and J6.3.

2. NDT of Welded Joints

In addition to the requirements of *Specification* Section N5.5, nondestructive testing of welded joints shall be as required in this section.

2a. CJP Groove Weld NDT

Ultrasonic testing (UT) shall be performed on 100% of complete-joint-penetration (CJP) groove welds in materials 5⁄16 in. (8 mm) thick or greater. UT in materials less than 5⁄16 in. (8 mm) thick is not required. Weld discontinuities shall be accepted or rejected on the basis of AWS D1.1/D1.1M Table 6.2. Magnetic particle testing (MT) shall be performed on 25% of all beam-to-column CJP groove welds. The rate of UT and MT is permitted to be reduced in accordance with Sections J6.2g and J6.2h, respectively.

Exception: For ordinary moment frames in structures in risk categories I or II, UT and MT of CJP groove welds are required only for demand critical welds.

User Note: For structures in risk category III or IV, *Specification* Section N5.5b requires that the UT be performed by QA on all CJP groove welds subject to transversely applied tension loading in butt, T- and corner joints, in material 5⁄16 in. (8 mm) thick or greater.

2b. Column Splice and Column to Base Plate PJP Groove Weld NDT

UT shall be performed by QA on 100% of partial-joint-penetration (PJP) groove welds in column splices and column to base plate welds. The rate of UT is permitted to be reduced in accordance with Section J6.2g.

UT shall be performed using written procedures and UT technicians qualified in accordance with AWS D1.8/D1.8M. The weld joint mock-ups used to qualify procedures and technicians shall include at least one single-bevel PJP groove welded joint and one double-bevel PJP groove welded joint, detailed to provide transducer access limitations similar to those to be encountered at the weld faces and by the column web. Rejection of discontinuities outside the groove weld throat shall be considered false indications in procedure and personnel qualification. Procedures qualified using mock-ups with artificial flaws 1⁄16 in. (1.5 mm) in their smallest dimension are permitted.

TABLE J6.3
Visual Inspection Tasks After Welding

Visual Inspection Tasks After Welding	QC Task	QC Doc.	QA Task	QA Doc.
Welds cleaned	O	—	O	—
Size, length, and location of welds	P	—	P	—
Welds meet visual acceptance criteria –Crack prohibition –Weld/base-metal fusion –Crater cross section –Weld profiles and size –Undercut –Porosity	P	D	P	D
k-area[1]	P	D	P	D
Placement of reinforcing or contouring fillet welds (if required)	P	D	P	D
Backing removed, weld tabs removed and finished, and fillet welds added (if required)	P	D	P	D
Repair activities	P	—	P	D

[1] When welding of doubler plates, continuity plates or stiffeners has been performed in the *k*-area, visually inspect the web *k*-area for cracks within 3 in. (75 mm) of the weld. The visual inspection shall be performed no sooner than 48 hours following completion of the welding.

UT examination of welds using alternative techniques in compliance with AWS D1.1/D1.1M Annex Q is permitted.

Weld discontinuities located within the groove weld throat shall be accepted or rejected on the basis of criteria of AWS D1.1/D1.1M Table 6.2, except when alternative techniques are used, the criteria shall be as provided in AWS D1.1/D1.1M Annex Q.

2c. Base Metal NDT for Lamellar Tearing and Laminations

After joint completion, base metal thicker than 1½ in. (38 mm) loaded in tension in the through-thickness direction in T- and corner-joints, where the connected material is greater than ¼ in. (19 mm) and contains CJP groove welds, shall be ultrasonically tested for discontinuities behind and adjacent to the fusion line of such welds. Any base metal discontinuities found within *t*/4 of the steel surface shall be accepted or rejected on the basis of criteria of AWS D1.1/D1.1M Table 6.2, where *t* is the thickness of the part subjected to the through-thickness strain.

2d. Beam Cope and Access Hole NDT

At welded splices and connections, thermally cut surfaces of beam copes and access holes shall be tested using magnetic particle testing or penetrant testing, when the flange thickness exceeds 1½ in. (38 mm) for rolled shapes, or when the web thickness exceeds 1½ in. (38 mm) for built-up shapes.

2e. Reduced Beam Section Repair NDT

MT shall be performed on any weld and adjacent area of the reduced beam section (RBS) cut surface that has been repaired by welding, or on the base metal of the RBS cut surface if a sharp notch has been removed by grinding.

2f. Weld Tab Removal Sites

At the end of welds where weld tabs have been removed, MT shall be performed on the same beam-to-column joints receiving UT as required under Section J6.2a. The rate of MT is permitted to be reduced in accordance with Section J6.2h. MT of continuity plate weld tab removal sites is not required.

2g. Reduction of Percentage of Ultrasonic Testing

The reduction of percentage of UT is permitted to be reduced in accordance with *Specification* Section N5.5e, except no reduction is permitted for demand critical welds.

2h. Reduction of Percentage of Magnetic Particle Testing

The amount of MT on CJP groove welds is permitted to be reduced if approved by the engineer of record and the authority having jurisdiction. The MT rate for an individual welder or welding operator is permitted to be reduced to 10%, provided the reject rate is demonstrated to be 5% or less of the welds tested for the welder or welding operator. A sampling of at least 20 completed welds for a job shall be made for such reduction evaluation. Reject rate is the number of welds containing rejectable defects divided by the number of welds completed. This reduction is prohibited on welds in the *k*-area, at repair sites, backing removal sites, and access holes.

J7. INSPECTION OF HIGH-STRENGTH BOLTING

Bolting inspection shall satisfy the requirements of *Specification* Section N5.6 and this section. Bolting inspection shall be performed by both quality control and quality assurance personnel. As a minimum, the tasks shall be as listed in Tables J7.1, J7.2 and J7.3.

J8. OTHER STEEL STRUCTURE INSPECTIONS

Other inspections of the steel structure shall satisfy the requirements of *Specification* Section N5.8 and this section. Such inspections shall be performed by both quality control and quality assurance personnel. Where applicable, the inspection tasks listed in Table J8.1 shall be performed.

User Note: The protected zone should be inspected by others following completion of the work of other trades, including those involving curtainwall, mechanical, electrical, plumbing and interior partitions. See Section A4.1.

TABLE J7.1
Inspection Tasks Prior To Bolting

Inspection Tasks Prior To Bolting	QC Task	QC Doc.	QA Task	QA Doc.
Proper fasteners selected for the joint detail	O	—	O	—
Proper bolting procedure selected for joint detail	O	—	O	—
Connecting elements, including the faying surface condition and hole preparation, if specified, meet applicable requirements	O	—	O	—
Pre-installation verification testing by installation personnel observed for fastener assemblies and methods used	P	D	O	D
Proper storage provided for bolts, nuts, washers and other fastener components	O	—	O	—

TABLE J7.2
Inspection Tasks During Bolting

Inspection Tasks During Bolting	QC Task	QC Doc.	QA Task	QA Doc.
Fastener assemblies placed in all holes and washers (if required) are positioned as required	O	—	O	—
Joint brought to the snug tight condition prior to the pretensioning operation	O	—	O	—
Fastener component not turned by the wrench prevented from rotating	O	—	O	—
Bolts are pretensioned progressing systematically from the most rigid point toward the free edges	O	—	O	—

TABLE J7.3
Inspection Tasks After Bolting

Inspection Tasks After Bolting	QC Task	QC Doc.	QA Task	QA Doc.
Document accepted and rejected connections	P	D	P	D

TABLE J8.1
Other Inspection Tasks

Other Inspection Tasks	QC Task	QC Doc	QA Task	QA Doc.
RBS requirements, if applicable –Contour and finish –Dimensional tolerances	P	D	P	D
Protected zone—no holes and unapproved attachments made by fabricator or erector, as applicable	P	D	P	D

PRCNC20240216

ZERVAS
ARCHITECTURE | INTERIOR DESIGN
zervasgroup.com
209 Prospect Street
Bellingham, WA 98225
360.734.4744

KINGWORKS STRUCTURAL ENGINEERS
600 Dupont St, Suite B
Bellingham, WA 98225
360.714.8260
www.king-works.com

DANIEL DAVIS LINKHART
STATE OF WASHINGTON
41390
STRUCTURAL ENGINEER
PROFESSIONAL ENGINEER
1/22/24
DIGITAL SEAL ON PDF FILE

City of Puyallup
Development & Permitting Services
ISSUED PERMIT
Building | Planning | Engineering | Public Works | Fire | Traffic

100% CD SET

REV	ISSUED FOR	Date

PLAN NORTH

SCALE: 6" = 1'-0"

PSE - OPERATIONAL TRAINING CENTER

SEISMIC QC/QA REQMTS

PROJECT#.	21239
DRAWN BY:	GK
CHECKED BY:	DL
DATE ISSUED:	1/26/24

S0.04

PRINT: 1/22/2024 9:51:56 AM
© 2024

Autodesk Docs://7222 - 5111 - PSE North Bend Precon Design/230731KW21239 Zervas PSE OTC - Struct - r22.rvt
21239

1 AISC 341 - QUALITY CONTROL AND QUALITY ASSURANCE REQUIREMENTS
6" = 1'-0"

PRCNC20240216

1/22/2024 9:51:57 AM

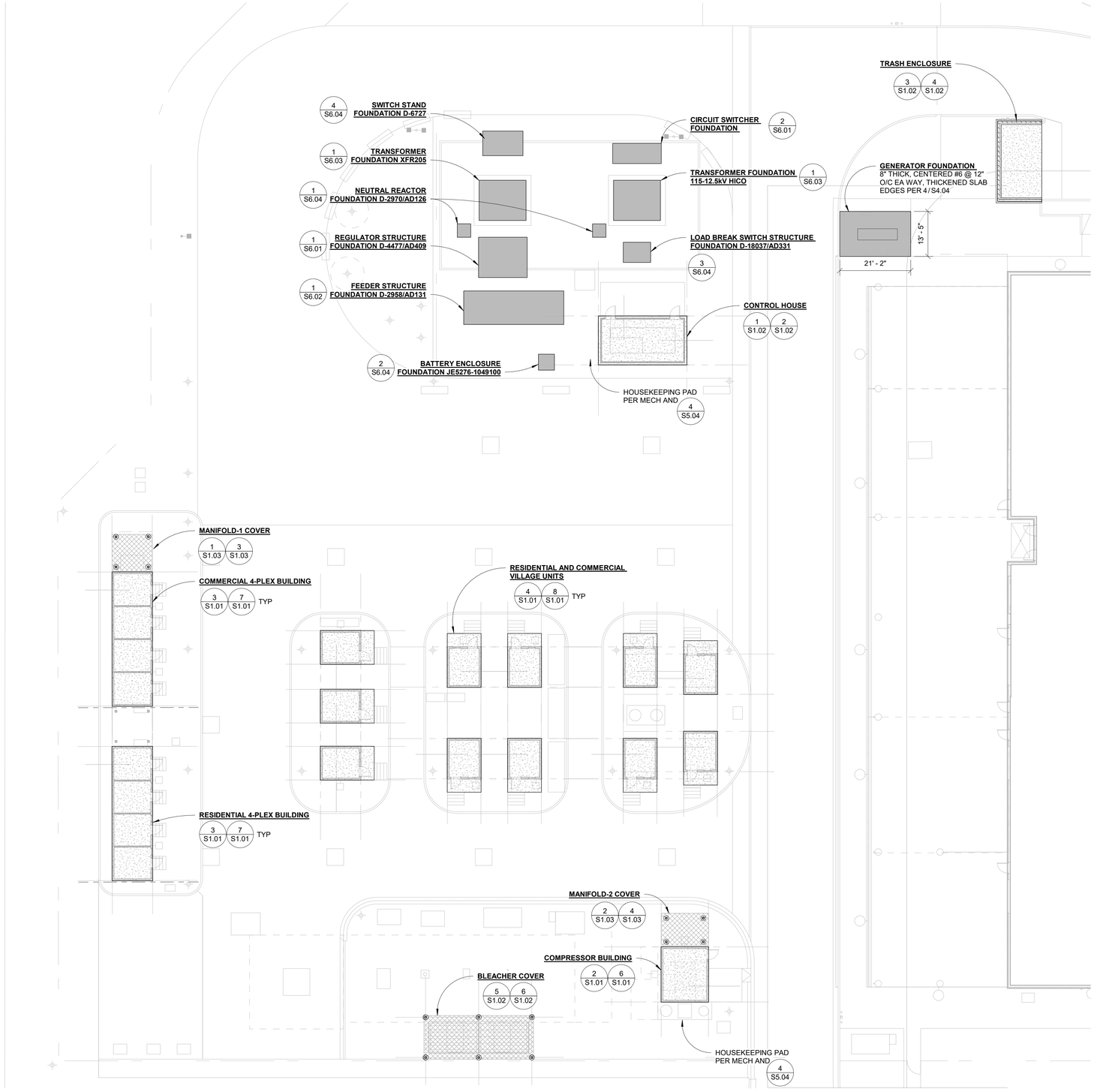

1 OUTDOOR TRAINING SITE STRUCTURES - FOUNDATION PLAN
1/16" = 1'-0"

ZERVAS
ARCHITECTURE | INTERIOR DESIGN
zervasgroup.com
209 Prospect Street
Bellingham, WA 98225
360.734.4744

KINGWORKS STRUCTURAL ENGINEERS
600 Dupont St, Suite B
Bellingham, WA 98225
360.714.8260
www.king-works.com

DANIEL DAVIS LINKHART — STATE OF WASHINGTON — 41390 — STRUCTURAL ENGINEER — PROFESSIONAL ENGINEER — 1/22/24

DIGITAL SEAL ON PDF FILE

City of Puyallup
Development & Permitting Services
ISSUED PERMIT

Building	Planning
Engineering	Public Works
Fire	Traffic

100% CD SET

REV	ISSUED FOR	Date

PLAN NORTH

SCALE: 1/16" = 1'-0"

PSE - OPERATIONAL TRAINING CENTER

OUTDOOR TRAINING SITE STRUCTURES - OVERVIEW PLAN

PROJECT#.	21239
DRAWN BY:	GK
CHECKED BY:	DL
DATE ISSUED:	1/26/24

S1.00

PRINT: 1/22/2024 9:51:57 AM

© 2024

21239

Autodesk Docs://7222 - 5111 - PSE North Bend Precon Design/230731KW21239 Zervas PSE OTC - Struct - r22.rvt

1/22/2024 9:51:59 AM

SHEAR WALL SCHEDULE (15/32" SHEATHING W/ HF OR SPF STUDS & 10d FASTENERS)							
WALL TYPE	WALL SHEATHING APA-RATED STRUCTURAL-1 [1,2,13,14]	NAIL SPACING @ ALL SHEATHING EDGES [4,5,6,12]	BLOCKING AND STUD SIZE @ ADJOINING SHEATHING EDGES [3,7,14]	RIM JOIST OR BLOCKING CONN. TO TOP PLATE BELOW [8,9,10]	WALL BOTTOM PLATE & ATTACHMENT TO WOOD STRUCTURE BELOW [16]	WALL MUD SILL PLATE AND ATTACHMENT TO CONCRETE STRUCTURE BELOW	ASD CAPACITY
W6	15/32	6" O/C	2x	CLIP @ 16" O/C	.22x5 SDWS SCREW AT 12" O/C	2x PLATE 5/8" AB @ 48" O/C	315 PLF

SHEAR WALL NOTES:

1. INSTALL SHEATHING EITHER HORIZONTALLY OR VERTICALLY. PROVIDE 1/8" GAP BETWEEN ALL ABUTTING PANEL EDGES.
2. WHERE SHEATHING IS APPLIED ON BOTH FACES, PANEL LAYOUT SHALL BE OFFSET SUCH THAT THE ABUTTING PANEL JOINTS ON EACH FACE DO NOT OCCUR OVER A COMMON (SHARED) STUD OR DOUBLE STUD. OFFSET VERT PANEL JOINTS ON EACH FACE BY 16" HORIZONTAL, MIN.
3. BLOCKING IS REQUIRED AT ALL SHEATHING EDGES. SEE SCHEDULE FOR SIZE MINIMUM.
4. PROVIDE SHEAR WALL SHEATHING AND NAILING FOR THE ENTIRE LENGTH OF THE WALLS INDICATED ON THE PLANS. ENDS OF FULL HEIGHT WALLS ARE DESIGNATED BY WINDOWS, DOORWAYS OR AS DESIGNATED ON PLANS. REFERENCE PLANS FOR HOLDOWN LOCATION AND SIZE.
5. SHEATHING EDGE NAILING IS REQUIRED AT ALL SHEAR WALL END POSTS. WHERE END POST IS COMPRISED OF MULTIPLE 2x MEMBERS, STAGGER EDGE NAILING EQUALLY TO EACH MEMBER; IN ADDITION, SISTER EACH MEMBER PER SHEAR WALL NOTE [14].
6. NAIL SIZE TO BE 0.148"Ø (OR 0.128"Ø IF HDG) WITH MINIMUM 1-1/2" PENETRATION IN STUD. STAGGER NAILING AT SHEATHING EDGES WHEN NAILS ARE SPACED AT LESS THAN 4".
7. INTERMEDIATE FRAMING SHALL BE 2x MINIMUM MEMBERS, UNLESS LARGER SIZES ARE INDICATED ON PLAN. ATTACH SHEATHING TO INTERMEDIATE FRAMING WITH 0.148"Ø x3" NAILS AT 12" O/C WHERE STUDS ARE SPACED AT 16" O/C AND 0.148"Ø x3" NAILS AT 6" O/C WHERE STUDS ARE SPACED AT 24" O/C.
8. BASED ON 0.131"Ø x1-1/2" NAILS USED TO ATTACH FRAMING CLIPS DIRECTLY TO FRAMING. USE 0.131"Ø x2-1/2" NAILS WHERE INSTALLED OVER SHEATHING.
9. FRAMING CLIPS: SIMPSON A35 OR LTP4 (INSTALLED LONG SIDE HORIZONTAL) OR APPROVED EQUIVALENT, SEE DETAILS.
10. WHERE BOTTOM PLATE ATTACHMENT SPECIFIES (2) ROWS OF NAILS, PROVIDE DOUBLE JOIST, RIM JOIST OR EQUAL BELOW. STAGGER NAILS IN ROWS 1-1/2" APART MINIMUM.
11. TYPICAL SILL ANCHORS AND PLATE WASHERS SHALL BE PER TYPICAL DETAIL.
12. PRESSURE TREATED MATERIAL CAN CAUSE EXCESSIVE CORROSION IN THE FASTENERS. PROVIDE HOT-DIPPED GALVANIZED (ELECTRO-PLATING IS NOT ACCEPTABLE) NAILS AND CONNECTOR PLATES (FRAMING ANGLES, ETC.) FOR ALL CONNECTORS IN CONTACT WITH PRESSURE TREATED FRAMING MEMBERS AND/OR WHERE EXPOSED TO MOISTURE/HUMIDITY.
13. DO NOT APPLY WOOD SHEATHING OVER GYPSUM BOARD.
14. AT ADJOINING SHEATHING EDGES, DOUBLE 2x STUDS NAILED TOGETHER MAY BE USED IN PLACE OF A SINGLE 3x STUD. FASTEN DOUBLE 2x STUDS TOGETHER WITH 3" LONG NAILS WITH THE SAME DIAMETER AND AT THE SAME SPACING AS THE EDGE NAILING. ALL BUILT-UP END POSTS SHALL BE NAILED SIMILARLY.
15. SEE STRUCTURAL NOTES FOR SPECIAL INSPECTION REQUIREMENTS.
16. WHERE SHEATHING OCCURS ON BOTH SIDES OF WALL, PROVIDE DOUBLE RIM OR BLOCKING IN ACCORDANCE WITH DETAILS) AND ONE ROW OF PLATE NAILING TO EACH PLY.

SHEARWALL SCHEDULE NOTES 10d
12" = 1'-0"

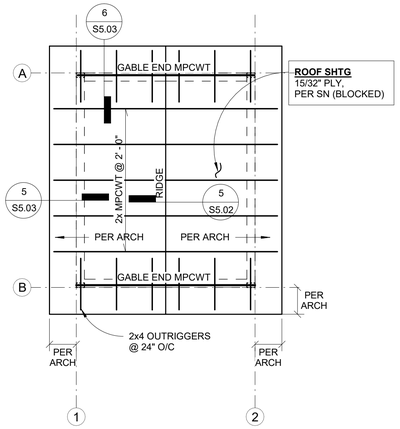

8 VILLAGE UNIT - ROOF FRAMING PLAN
1/4" = 1'-0"

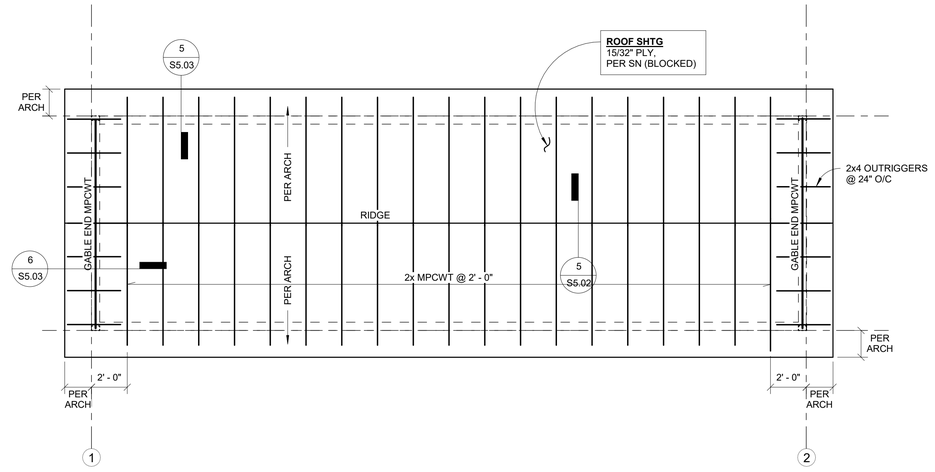

7 TYP 4-PLEX - ROOF FRAMING PLAN
1/4" = 1'-0"

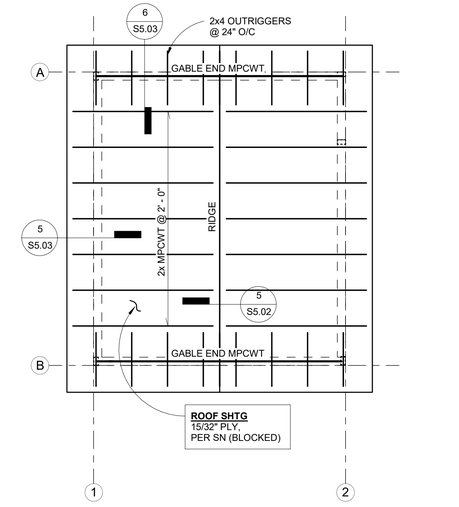

6 COMPRESSOR BLDG - ROOF FRAMING PLAN
1/4" = 1'-0"

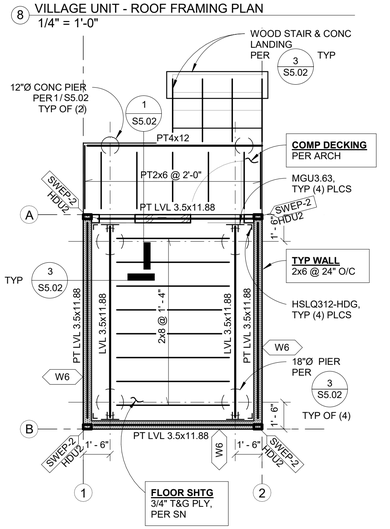

4 VILLAGE UNIT - FOUNDATION PLAN
1/4" = 1'-0"

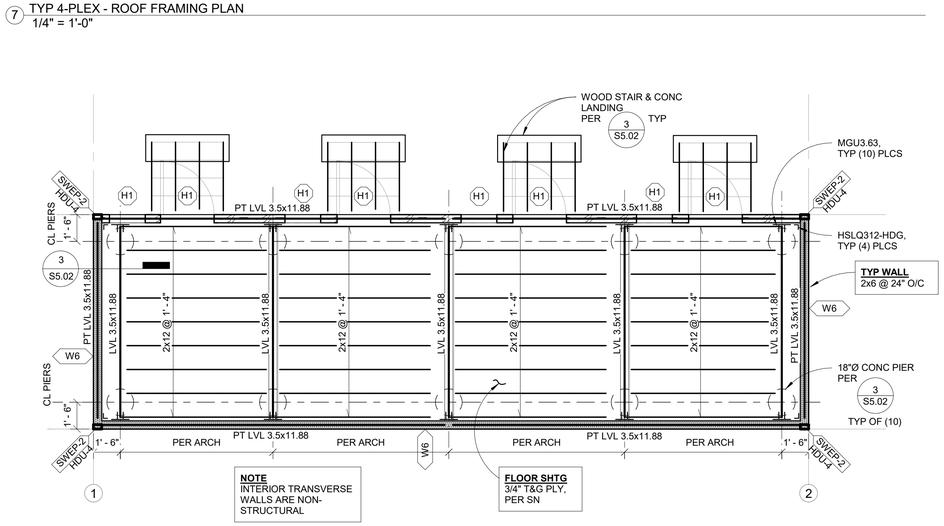

3 TYP 4-PLEX - FOUNDATION PLAN
1/4" = 1'-0"

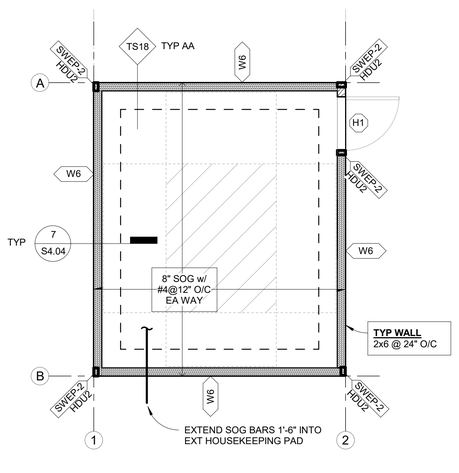

2 COMPRESSOR BLDG - FOUNDATION PLAN
1/4" = 1'-0"

ZERVAS
ARCHITECTURE | INTERIOR DESIGN
zervasgroup.com
209 Prospect Street
Bellingham, WA 98225
360.734.4744

KINGWORKS STRUCTURAL ENGINEERS
600 Dupont St, Suite B
Bellingham, WA 98225
360.714.8260
www.king-works.com

DANIEL DAVIS LINKHART
STATE OF WASHINGTON
41390
STRUCTURAL ENGINEER
PROFESSIONAL ENGINEER
1/22/24
DIGITAL SEAL
ON PDF FILE

City of Puyallup
Development & Permitting Services
ISSUED PERMIT
Building | Planning | Engineering | Public Works | Fire | Traffic

100% CD SET

REV	ISSUED FOR	Date

PLAN NORTH

SCALE:
As indicated

PSE -
OPERATIONAL
TRAINING CENTER

SITE STRUCTURES

PROJECT#.	21239
DRAWN BY:	GK
CHECKED BY:	DL
DATE ISSUED:	1/26/24

S1.01

PRINT: 1/22/2024 9:51:59 AM

© 2024

21239

Autodesk Docs://7222 - 5111 - PSE North Bend Precon Design/23073KW21239 Zervas PSE OTC - Struct - r22.rvt

1/22/2024 9:52:00 AM

PRCNC20240216

ZERVAS
ARCHITECTURE | INTERIOR DESIGN
zervasgroup.com
209 Prospect Street
Bellingham, WA 98225
360.734.4744

KINGWORKS STRUCTURAL ENGINEERS
600 Dupont St, Suite B
Bellingham, WA 98225
360.714.8260
www.king-works.com

DANIEL DAVIS LINKHART — STATE OF WASHINGTON — 41390 — STRUCTURAL ENGINEER — PROFESSIONAL ENGINEER — 1/22/24

DIGITAL SEAL ON PDF FILE

City of Puyallup
Development & Permitting Services
ISSUED PERMIT

Building	Planning
Engineering	Public Works
Fire	Traffic

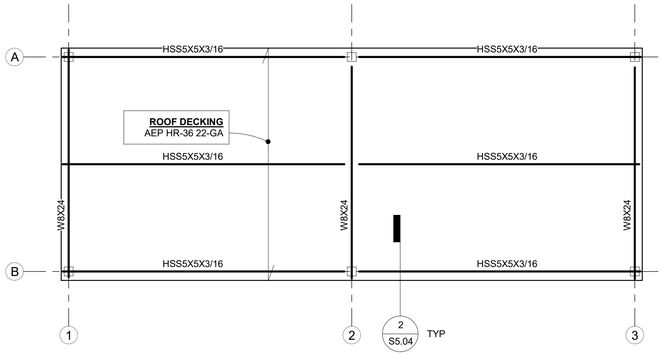

6 BLEACHER COVER - ROOF FRAMING PLAN
1/4" = 1'-0"

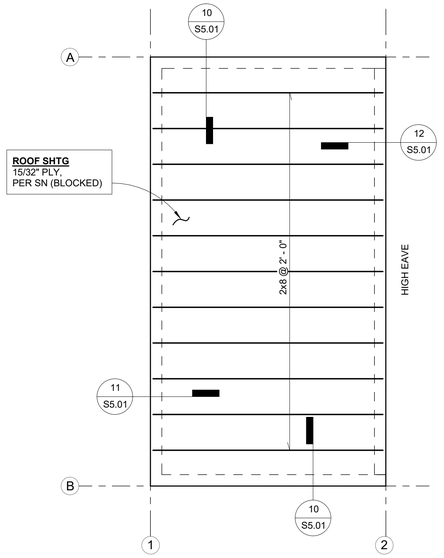

4 TRASH ENCLOSURE - ROOF FRAMING PLAN
1/4" = 1'-0"

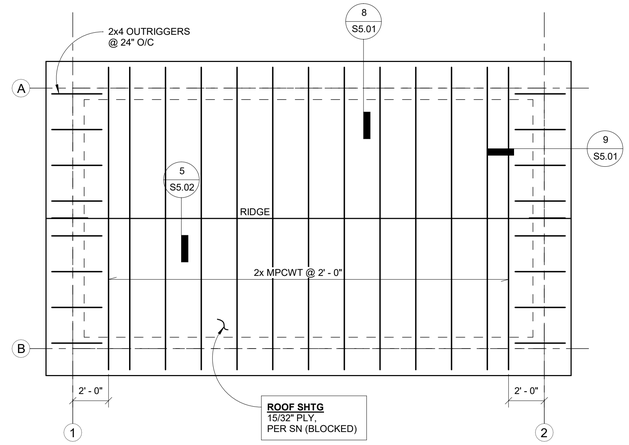

2 CONTROL HOUSE - ROOF FRAMING PLAN
1/4" = 1'-0"

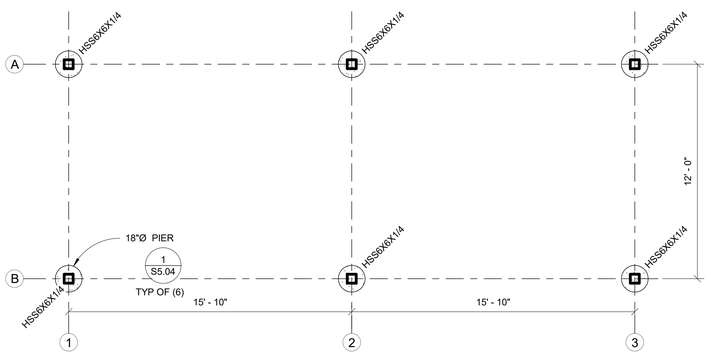

5 BLEACHER COVER - FOUNDATION PLAN
1/4" = 1'-0"

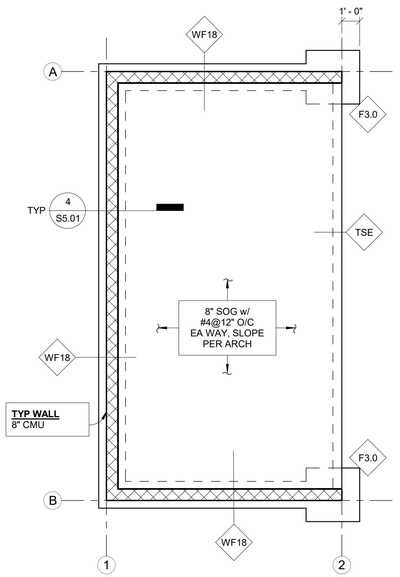

3 TRASH ENCLOSURE - FOUNDATION PLAN
1/4" = 1'-0"

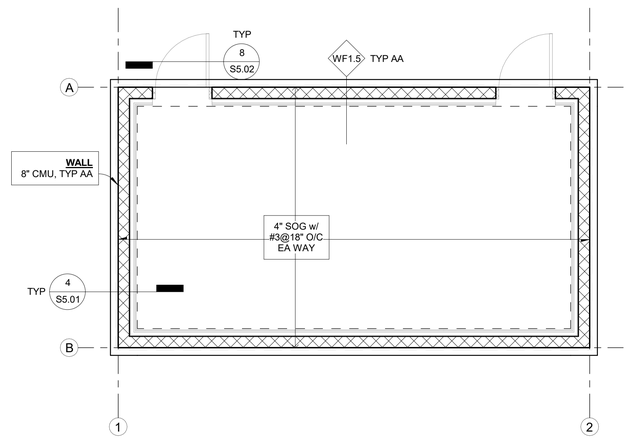

1 CONTROL HOUSE - FOUNDATION PLAN
1/4" = 1'-0"

100% CD SET

REV	ISSUED FOR	Date

PLAN NORTH

SCALE:
1/4" = 1'-0"

PSE - OPERATIONAL TRAINING CENTER

SITE STRUCTURES

PROJECT#.	21239
DRAWN BY:	GK
CHECKED BY:	DL
DATE ISSUED:	1/26/24

S1.02

PRINT. 1/22/2024 9:52:00 AM

© 2024

Autodesk Docs://7222 - 5111 - PSE North Bend Precon Design/230731KW21239 Zervas PSE OTC - Struct - r22.rvt

21239

1/22/2024 9:52:01 AM

Autodesk Docs://7222 - 5111 - PSE North Bend Precon Design/230731KW21239 Zervas PSE OTC - Struct - r22.rvt

21239

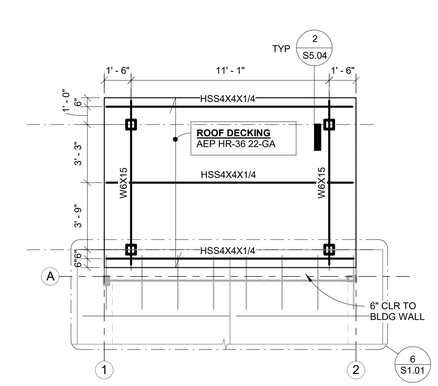

4 MANIFOLD-2 COVER - ROOF FRAMING PLAN
1/4" = 1'-0"

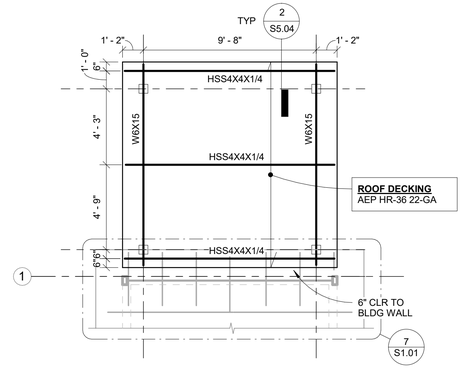

3 MANIFOLD-1 COVER - ROOF FRAMING PLAN
1/4" = 1'-0"

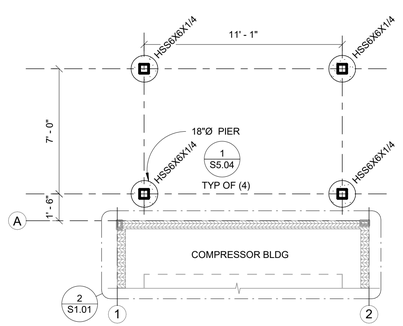

2 MANIFOLD-2 COVER - FOUNDATION PLAN
1/4" = 1'-0"

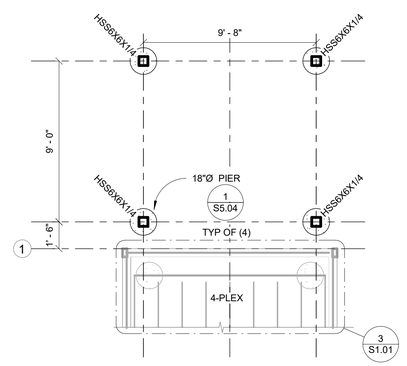

1 MANIFOLD-1 COVER - FOUNDATION PLAN
1/4" = 1'-0"

PRCNC20240216

ZERVAS

ARCHITECTURE | INTERIOR DESIGN
zervasgroup.com
209 Prospect Street
Bellingham, WA 98225
360.734.4744

KINGWORKS STRUCTURAL ENGINEERS
600 Dupont St, Suite B
Bellingham, WA 98225
360.714.8260
www.king-works.com

DANIEL DAVIS LINKHART
STATE OF WASHINGTON
41390
STRUCTURAL ENGINEER
PROFESSIONAL ENGINEER
1/26/24

DIGITAL SEAL
ON PDF FILE

City of Puyallup
Development & Permitting Services
ISSUED PERMIT

Building	Planning
Engineering	Public Works
Fire	Traffic

100% CD SET

REV	ISSUED FOR	Date

PLAN NORTH

SCALE:
1/4" = 1'-0"

PSE - OPERATIONAL TRAINING CENTER

SITE STRUCTURES

PROJECT#:	21239
DRAWN BY:	GK
CHECKED BY:	DL
DATE ISSUED:	1/26/24

S1.03

PRINT: 1/22/2024 9:52:01 AM

© 2024

PRCNC20240216

1/22/2024 9:52:02 AM

FOOTING SCHEDULE

MARK	WIDTH	DEPTH	REINFORCING	DESCRIPTION
F3.0	3'-0"x3'-0"	1'-0"	(5) #4 EACH WAY, CENTER IN DEPTH	SPREAD FOOTING
F4.0a	4'-0"x4'-0"	1'-0"	(5) #6 BOT EA WAY	SPREAD FOOTING
F4.0b	4'-0"x4'-0"	1'-6"	(6) #6 BOT EA WAY	SPREAD FOOTING
F5.0a	5'-0"x5'-0"	1'-0"	(5) #6 BOT EA WAY	SPREAD FOOTING
F5.0b	5'-0"x5'-0"	1'-6"	(7) #6 BOT EA WAY (+ (7) #4 TOP EA WAY AT EXT PLINTH ONLY)	SPREAD FOOTING
F6.0	6'-0"x6'-0"	1'-6"	(8) #6 BOT EA WAY	SPREAD FOOTING
GB-32	3'-0"	2'-0"	CONT (4) #6 TOP + (6) #6 BOT, 2-LEG #4 STIRRUPS @ 9" O/C	GRADE BEAM
GB-32b	3'-0"	2'-0"	CONT (8) #6 TOP + (13) #8 BOT, 2-LEG #4 STIRRUPS @ 9" O/C	GRADE BEAM
GB-33	3'-0"	3'-0"	CONT (6) #8 TOP + (14) #6 BOT, 2-LEG #4 STIRRUPS @ 12" O/C	GRADE BEAM
GB-44	4'-0"	4'-0"	CONT (6) #6 TOP + (6) #8 BOT, 2-LEG #4 STIRRUPS @ 18" O/C	GRADE BEAM
GB-64	6'-0"	4'-0"	CONT (6) #6 TOP + (7) #6 BOT, 4-LEG #4 STIRRUPS @ 18" O/C	GRADE BEAM
TB12	1'-0"	1'-0"	(3)#5 CONT T&B, #3 CLOSED TIES AT 6" O/C	TIE BEAM
TB18	1'-6"	1'-6"	(3)#7 CONT T&B, #4 CLOSED TIES AT 9" O/C	TIE BEAM
TS18	1'-6"	PER DETAIL	PER DETAIL	CONT THICKENED SLAB FOOTING
TSE	PER DETAIL	PER DETAIL	PER DETAIL	CONT THICKENED SLAB EDGE
WF1.5	1'-6"	1'-0"	(3)#4 CONT LONGITUDINAL	CONT STEMWALL FOOTING
WF18	1'-6"	1'-0"	(3)#4 CONT LONGITUDINAL	CONT STEMWALL FOOTING

NOTES
1. ELEVATIONS ARE TOP-OF-FOOTING (TFE) UNLESS OTHERWISE NOTED.
2. UNDERLINED DIMENSIONS INDICATE EXT FACE OF STEM TO GRID.

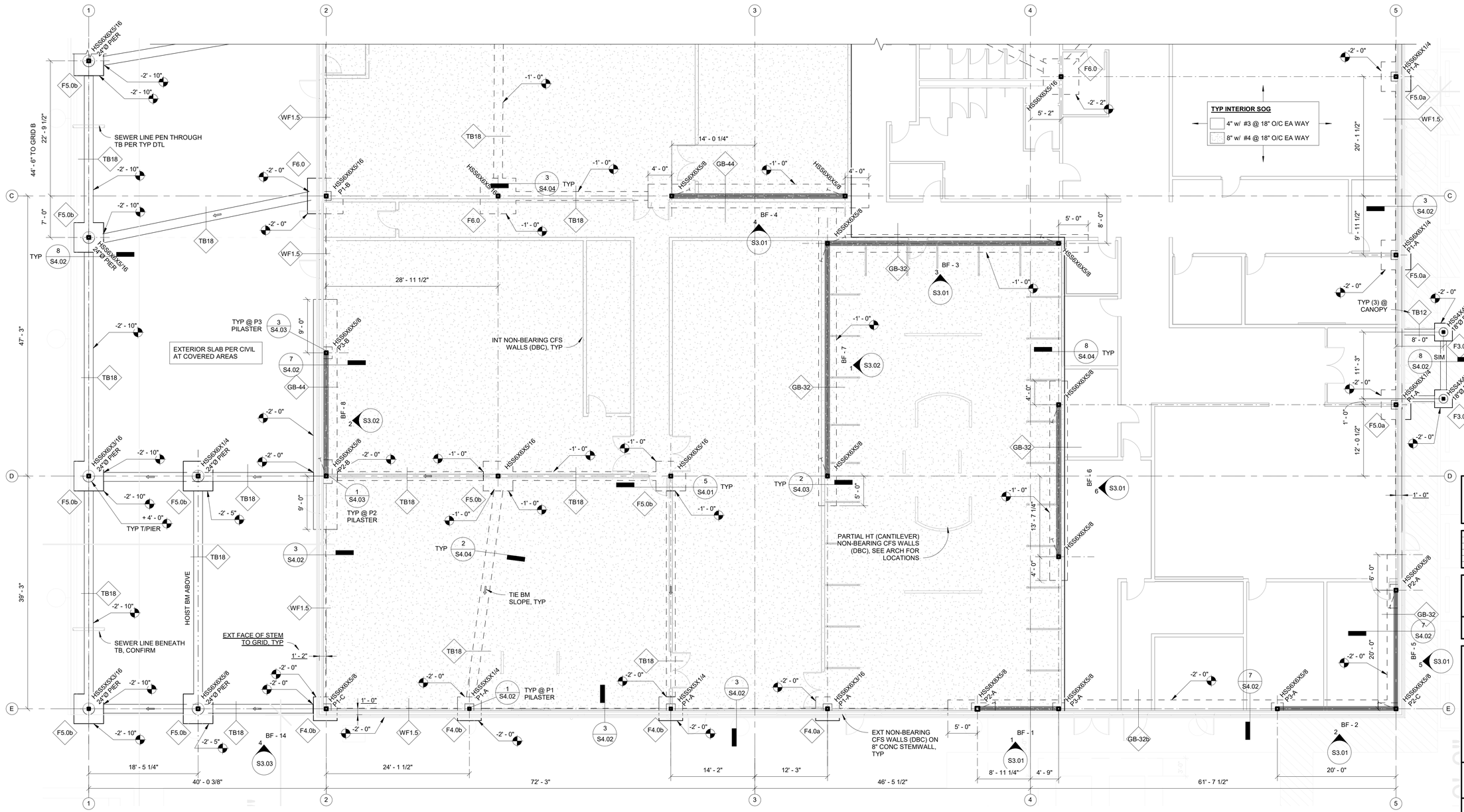

1 FOUNDATION & MAIN FLOOR FRAMING PLAN - SOUTH
1/8" = 1'-0"

ZERVAS
ARCHITECTURE | INTERIOR DESIGN
zervasgroup.com
209 Prospect Street
Bellingham, WA 98225
360.734.4744

KINGWORKS STRUCTURAL ENGINEERS
600 Dupont St, Suite B
Bellingham, WA 98225
360.714.8260
www.king-works.com

DANIEL DAVIS LINKHART — STATE OF WASHINGTON — 41390 — STRUCTURAL ENGINEER — PROFESSIONAL ENGINEER — 1/26/24

DIGITAL SEAL ON PDF FILE

City of Puyallup
Development & Permitting Services
ISSUED PERMIT

Building	Planning
Engineering	Public Works
Fire	Traffic

100% CD SET

REV	ISSUED FOR	Date

PLAN NORTH | TRUE NORTH

SCALE: 1/8"=1'-0"

PSE - OPERATIONAL TRAINING CENTER

FOUNDATION and MAIN FLOOR FRAMING PLAN - SOUTH

PROJECT#:	21239
DRAWN BY:	GK
CHECKED BY:	DL
DATE ISSUED:	1/26/24

S2.01

PRINT: 1/22/2024 9:52:02 AM

© 2024

21239

Autodesk Docs://7222 - 5111 - PSE North Bend Precon Design/230731KW21239 Zervas PSE OTC - Struct - r22.rvt

PRCNC20240216

1/22/2024 9:52:04 AM

NOTES
1. ELEVATIONS ARE TOP-OF-FOOTING (TFE) UNLESS OTHERWISE NOTED.
2. UNDERLINED DIMENSIONS INDICATE EXT FACE OF STEM TO GRID.

FOOTING SCHEDULE

MARK	WIDTH	DEPTH	REINFORCING	DESCRIPTION
F3.0	3'-0"x3'-0"	1'-0"	(5) #4 EACH WAY, CENTER IN DEPTH	SPREAD FOOTING
F4.0a	4'-0"x4'-0"	1'-0"	(5) #6 BOT EA WAY	SPREAD FOOTING
F4.0b	4'-0"x4'-0"	1'-6"	(6) #6 BOT EA WAY	SPREAD FOOTING
F5.0a	5'-0"x5'-0"	1'-0"	(5) #6 BOT EA WAY	SPREAD FOOTING
F5.0b	5'-0"x5'-0"	1'-6"	(7) #6 BOT EA WAY (+ (7) #4 TOP EA WAY AT EXT PLINTH ONLY)	SPREAD FOOTING
F6.0	6'-0"x6'-0"	1'-6"	(8) #6 BOT EA WAY	SPREAD FOOTING
GB-32	3'-0"	2'-0"	CONT (4) #6 TOP + (6) #6 BOT, 2-LEG #4 STIRRUPS @ 9" O/C	GRADE BEAM
GB-32b	3'-0"	2'-0"	CONT (8) #6 TOP + (13) #8 BOT, 2-LEG #4 STIRRUPS @ 9" O/C	GRADE BEAM
GB-33	3'-0"	3'-0"	CONT (6) #8 TOP + (14) #6 BOT, 2-LEG #4 STIRRUPS @ 12" O/C	GRADE BEAM
GB-44	4'-0"	4'-0"	CONT (6) #6 TOP + (6) #8 BOT, 2-LEG #4 STIRRUPS @ 18" O/C	GRADE BEAM
GB-64	6'-0"	4'-0"	CONT (6) #6 TOP + (7) #6 BOT, 4-LEG #4 STIRRUPS @ 18" O/C	GRADE BEAM
TB12	1'-0"	1'-0"	(3)#5 CONT T&B, #3 CLOSED TIES AT 6" O/C	TIE BEAM
TB18	1'-6"	1'-6"	(3)#7 CONT T&B, #4 CLOSED TIES AT 9" O/C	TIE BEAM
TS18	1'-6"	PER DETAIL	PER DETAIL	CONT THICKENED SLAB FOOTING
TSE	PER DETAIL	PER DETAIL	PER DETAIL	CONT THICKENED SLAB EDGE
WF1.5	1'-6"	1'-0"	(3)#4 CONT LONGITUDINAL	CONT STEMWALL FOOTING
WF18	1'-6"	1'-0"	(3)#4 CONT LONGITUDINAL	CONT STEMWALL FOOTING

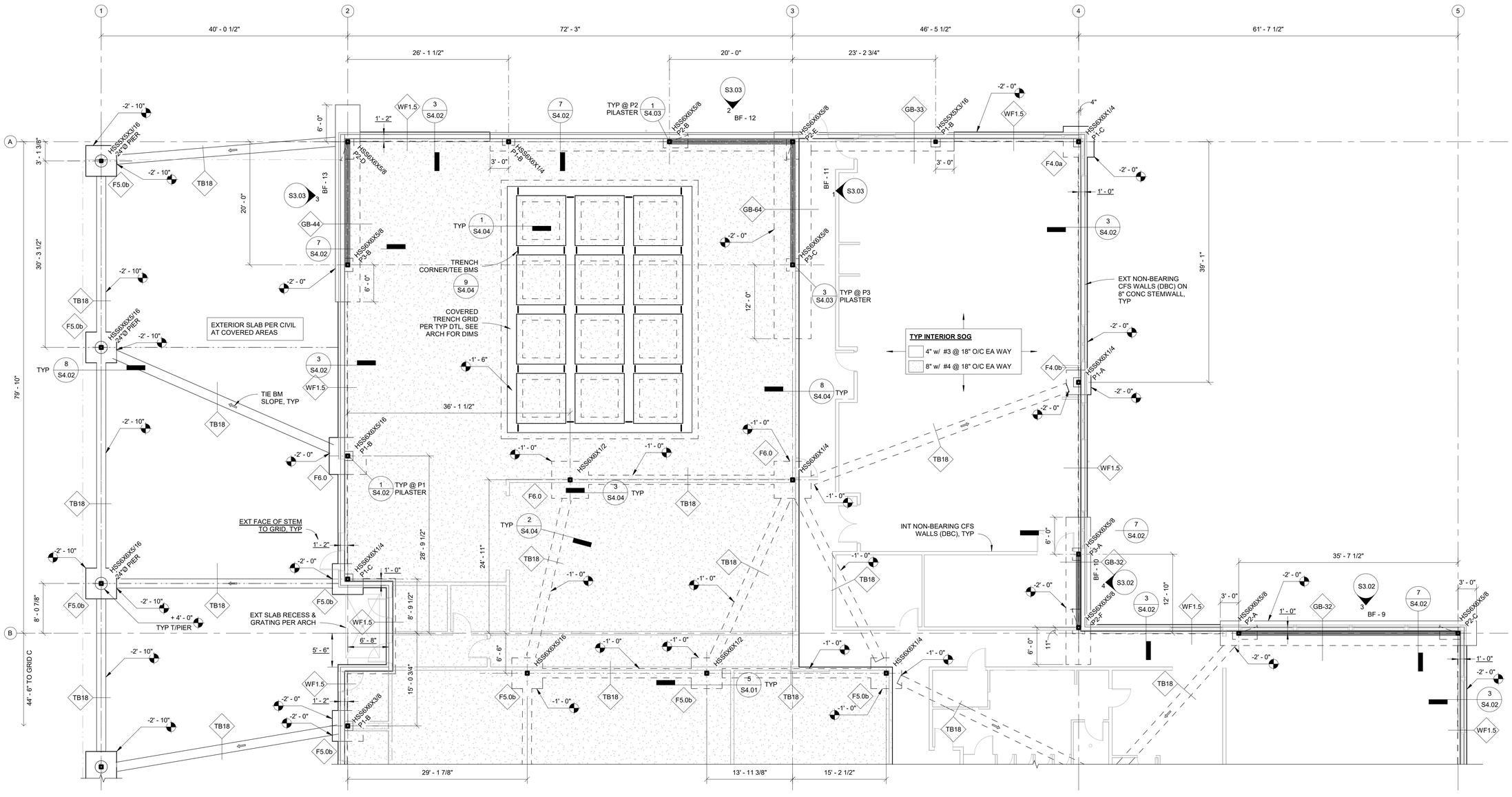

1 FOUNDATION & MAIN FLOOR FRAMING PLAN - NORTH
1/8" = 1'-0"

ZERVAS
ARCHITECTURE | INTERIOR DESIGN
zervasgroup.com
209 Prospect Street
Bellingham, WA 98225
360.734.4744

KINGWORKS STRUCTURAL ENGINEERS
600 Dupont St, Suite B
Bellingham, WA 98225
360.714.8260
www.king-works.com

DANIEL DAVIS LINKHART — STATE OF WASHINGTON — 41390 — STRUCTURAL ENGINEER — PROFESSIONAL ENGINEER — 1/26/24

DIGITAL SEAL ON PDF FILE

City of Puyallup
Development & Permitting Services
ISSUED PERMIT
Building | Planning | Engineering | Public Works | Fire | Traffic

100% CD SET

REV	ISSUED FOR	Date

PLAN NORTH | TRUE NORTH

SCALE: 1/8"=1'-0"

PSE - OPERATIONAL TRAINING CENTER

FOUNDATION and MAIN FLOOR FRAMING PLAN - NORTH

PROJECT#.	21239
DRAWN BY:	GK
CHECKED BY:	DL
DATE ISSUED:	1/26/24

S2.02

PRINT: 1/22/2024 9:52:04 AM

© 2024

21239

Autodesk Docs://7222 - 5111 - PSE North Bend Precon Design/23073IKW21239 Zervas PSE OTC - Struct - r22.rvt

PRCNC20240216

1/22/2024 9:52:07 AM

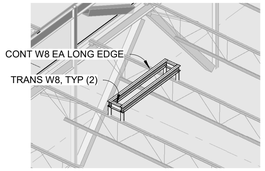

6 RTU FRAME SCHEMATIC - CU-R-05

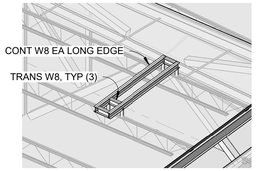

5 RTU FRAME SCHEMATIC - CU-R-03

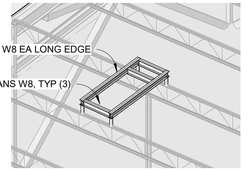

4 RTU FRAME SCHEMATIC - MUA-R-01

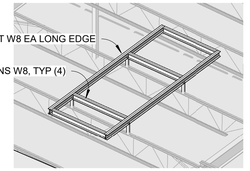

3 RTU FRAME SCHEMATIC - DOAS-R-01

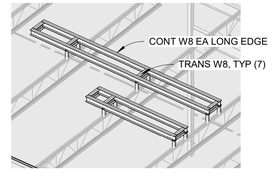

2 RTU FRAME SCHEMATIC - CU-R-01/04

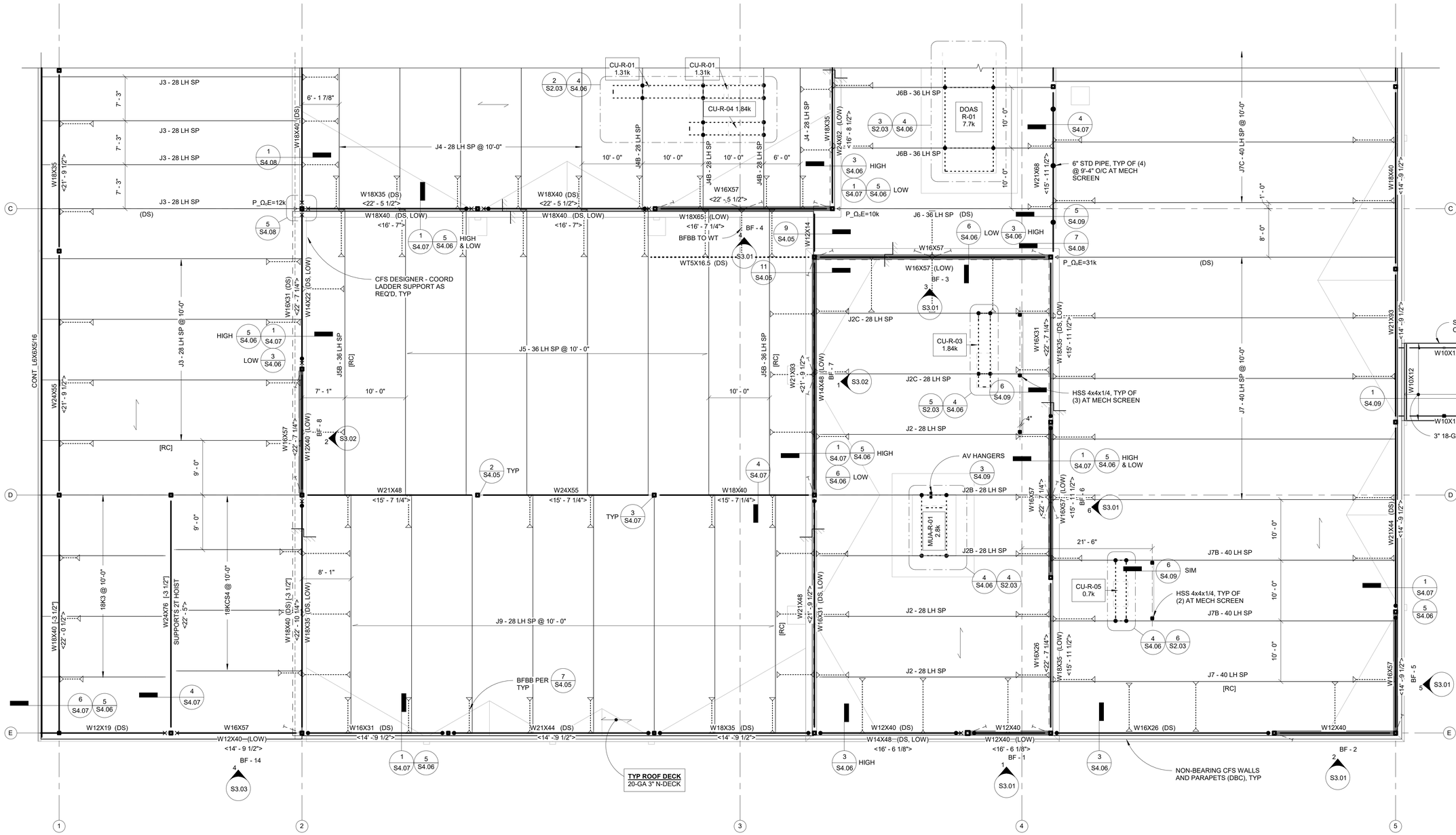
CU-R-01 1.31k
CU-R-01 1.31k
CU-R-04 1.84k
DOAS R-01 7.7k
CU-R-03 1.84k
CU-R-03 1.84k
MUA-R-01 2.6k
CU-R-05 0.7k
J3 - 28 LH SP @ 10'-0"
J4 - 28 LH SP @ 10'-0"
J5 - 36 LH SP @ 10' - 0"
J9 - 28 LH SP @ 10' - 0"
J6B - 36 LH SP
J6 - 36 LH SP (DS)
J7 - 40 LH SP @ 10'-0"
J7C - 40 LH SP @ 10'-0"
J2C - 28 LH SP
J2 - 28 LH SP
J2B - 28 LH SP
J7B - 40 LH SP
J7 - 40 LH SP
W18X35 <21' - 9 1/2">
W18X40 (DS) <16' - 7">
W18X40 (DS, LOW) <16' - 7">
W18X35 (DS) <22' - 5 1/2">
W18X40 (DS) <22' - 5 1/2">
W16X57 <22' - 5 1/2">
W18X65 (LOW) <16' - 7 1/4">
WT5X16.5 (DS)
W12X14
W24X62 (LOW) <16' - 8 1/2">
W21X68 <15' - 11 1/2">
W16X57
W16X57 (LOW)
W16X31 (DS) <22' - 7 1/4">
W14X22 (DS, LOW)
W24X55 <21' - 9 1/2">
W16X57 <22' - 7 1/4">
W12X40 (LOW)
W14X48 (LOW)
W16X31 <22' - 7 1/4">
W18X35 (DS, LOW) <15' - 11 1/2">
W21X93 <21' - 9 1/2">
W18X40 <14' - 9 1/2">
W21X93 <14' - 9 1/2">
W21X44 (DS) <14' - 9 1/2">
W18X40 [-3 1/2"] <22' - 0 1/2">
W24X76 [-3 1/2"] SUPPORTS 2T HOIST <22' - 5">
W18X40 (DS) [-3 1/2"] <22' - 10 1/4">
W18X35 (DS, LOW)
W21X48 <21' - 9 1/2">
W16X31 <22' - 7 1/4">
W16X35 (DS, LOW) <15' - 11 1/2">
W16X57 <22' - 7 1/4">
W16X57 (LOW) <15' - 11 1/2">
W16X26 <22' - 7 1/4">
W18X35 (LOW) <15' - 11 1/2">
W21X48 <15' - 7 1/4">
W24X55 <15' - 7 1/4">
W18X40 <15' - 7 1/4">
W21X48 <15' - 7 1/4">
W12X19 (DS)
W16X57
W12X40 (LOW) <14' - 9 1/2">
W16X31 (DS) <14' - 9 1/2">
W21X44 (DS) <14' - 9 1/2">
W18X35 (DS) <14' - 9 1/2">
W12X40 (DS) <14' - 9 1/2">
W14X48 (DS, LOW) <16' - 6 1/8">
W12X40 (LOW) <16' - 6 1/8">
W12X40
W16X26 (DS)
W12X40
W16X57 <14' - 9 1/2">
W21X44 (DS) <14' - 9 1/2">
W10X12
W10X12
W10X12
W10X12
CONT L6X6X5/16
W24X55 <21' - 9 1/2">
18K3 @ 10'-0"
18KCS4 @ 10'-0"
6" STD PIPE, TYP OF (4) @ 9'-4" O/C AT MECH SCREEN
HSS 4x4x1/4, TYP OF (3) AT MECH SCREEN
HSS 4x4x1/4, TYP OF (2) AT MECH SCREEN
SEE ARCH FOR CANOPY BM ELEVS
3" 18-GA N-DECK
AV HANGERS
SIM
HIGH
LOW
HIGH & LOW
P_Ω,E=12k
P_Ω,E=10k
P_Ω,E=31k
BF - 4
BF - 3
BF - 14
BF - 7
BF - 8
BF - 6
BF - 5
BF - 1
BF - 2
BFBB TO WT
BFBB PER TYP
CFS DESIGNER - COORD LADDER SUPPORT AS REQ'D, TYP
TYP ROOF DECK 20-GA 3" N-DECK
NON-BEARING CFS WALLS AND PARAPETS (DBC), TYP
6' - 1 7/8"
7' - 3"
7' - 1"
8' - 1"
9' - 0"
10' - 0"
6' - 0"
4"
21' - 6"
1' - 0"
8' - 0"
[RC]
(DS)
(LOW)
TYP
1 S4.08
2 S2.03
3 S2.03
4 S4.06
5 S4.08
6 S4.07
7 S4.05
8 S4.09
9 S4.05
10 S3.01
11 S4.05
1 S3.02
2 S3.02
1 S3.01
2 S3.01
3 S3.01
4 S3.03
1 S4.09
2 S4.05
3 S4.07
4 S4.07
5 S4.09
6 S4.09
1 S4.07
5 S4.06
1 S4.07
5 S4.06
3 S4.06
4 S4.06
5 S4.06
6

PRCNC20240216

1/22/2024 9:52:08 AM

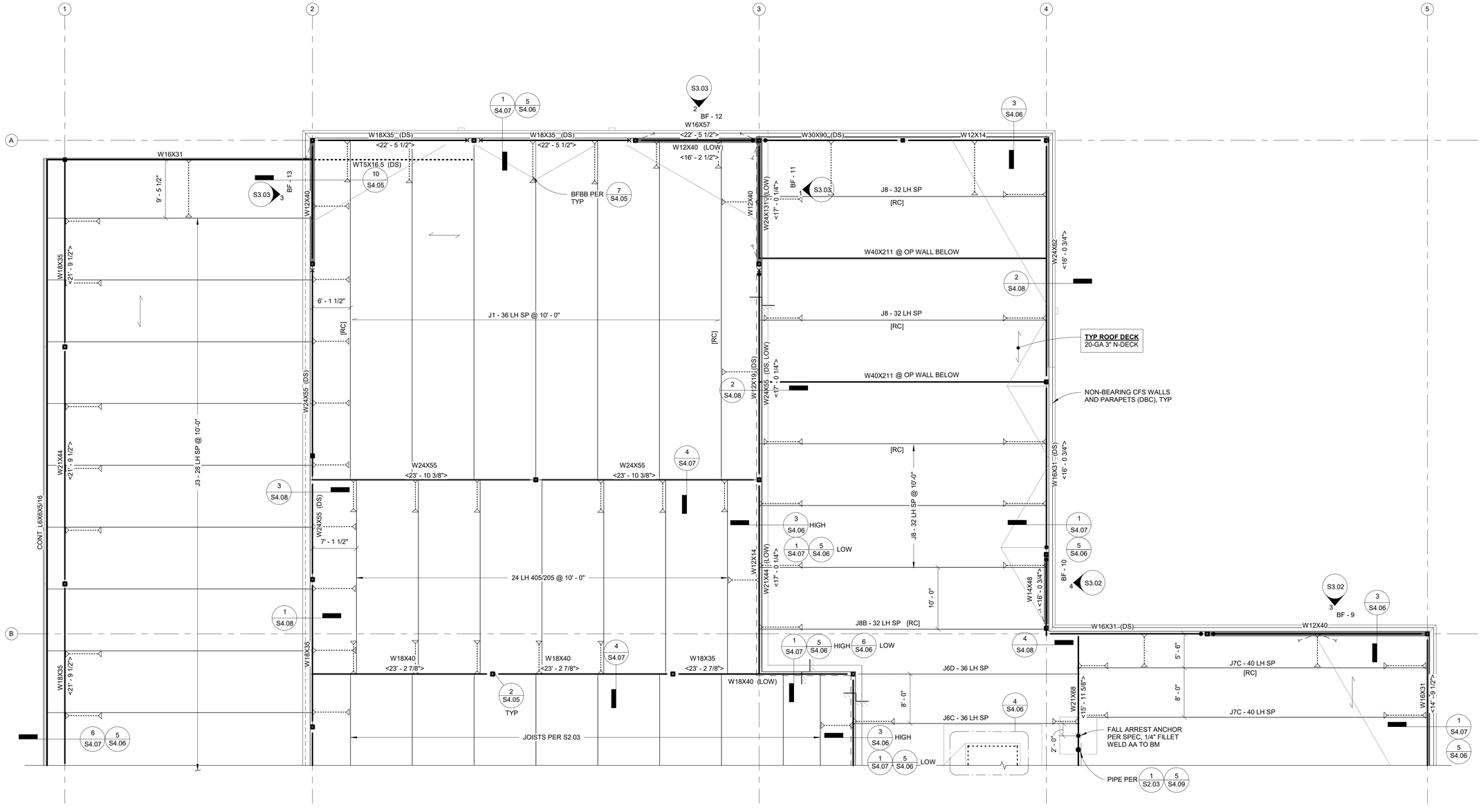

1 ROOF FRAMING PLAN - NORTH
1/8" = 1'-0"

ZERVAS

ARCHITECTURE | INTERIOR DESIGN
zervasgroup.com
209 Prospect Street
Bellingham, WA 98225
360.734.4744

KINGWORKS STRUCTURAL ENGINEERS
600 Dupont St, Suite B
Bellingham, WA 98225
360.714.8260
www.king-works.com

DANIEL DAVIS LINKHART
STATE OF WASHINGTON
41390
STRUCTURAL ENGINEER
PROFESSIONAL ENGINEER
1/22/24

DIGITAL SEAL
ON PDF FILE

City of Puyallup
Development & Permitting Services
ISSUED PERMIT

Building	Planning
Engineering	Public Works
Fire	Traffic

100% CD SET

REV	ISSUED FOR	Date

PLAN NORTH
TRUE NORTH

SCALE: 1/8"=1'-0"

PSE - OPERATIONAL TRAINING CENTER

ROOF FRAMING PLAN - NORTH

PROJECT#.	21239
DRAWN BY:	GK
CHECKED BY:	DL
DATE ISSUED:	1/26/24

S2.04

PRINT: 1/22/2024 9:52:08 AM

© 2024

21239

Autodesk Docs://7222 - 5111 - PSE North Bend Precon Design/230731KW21239 Zervas PSE OTC - Struct - r22.rvt

PRCNC20240216

1/22/2024 9:52:11 AM

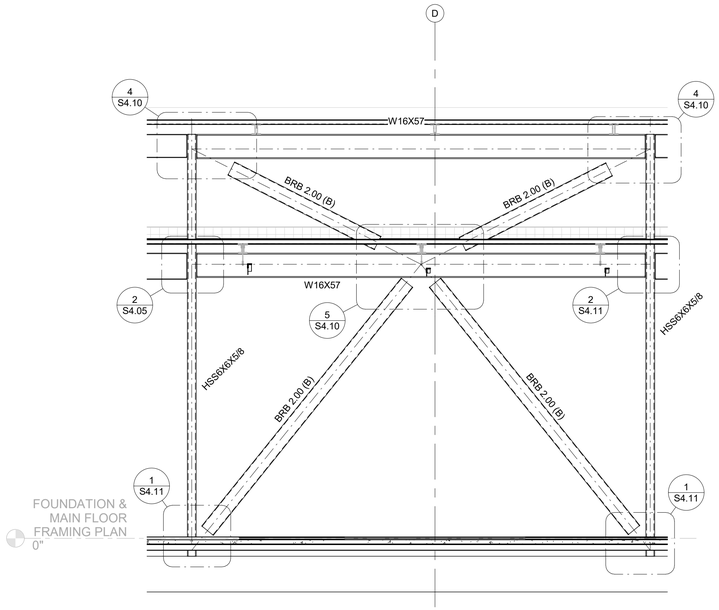

6 BF - 6
1/4" = 1'-0"

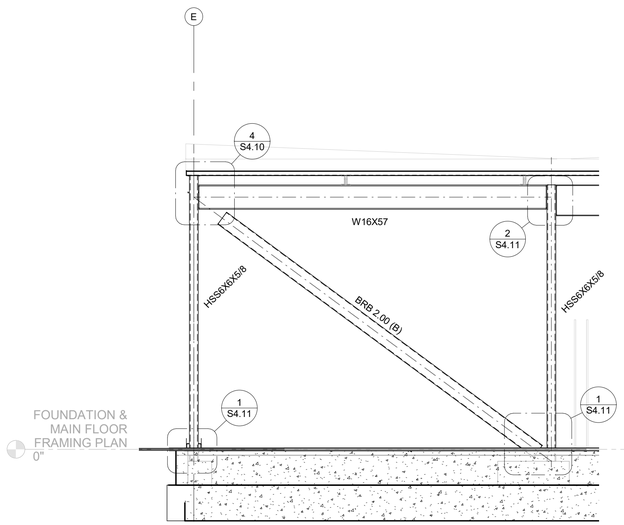

5 BF - 5
1/4" = 1'-0"

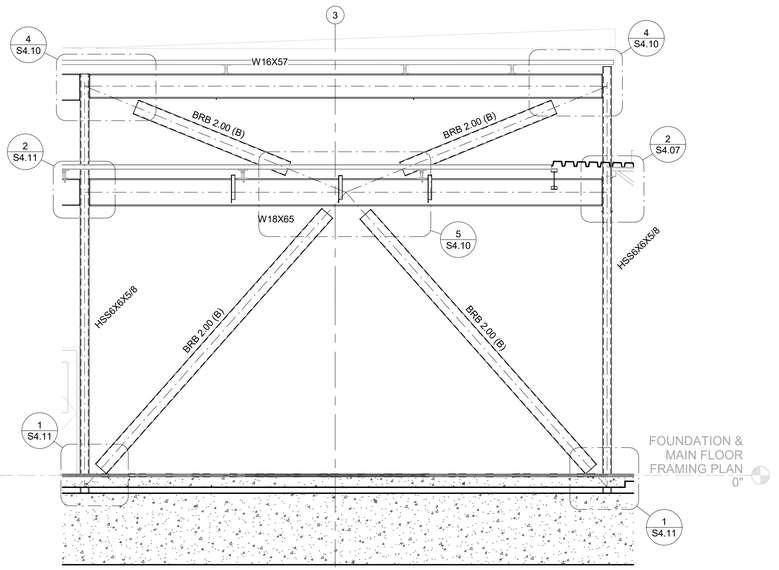

4 BF - 4
1/4" = 1'-0"

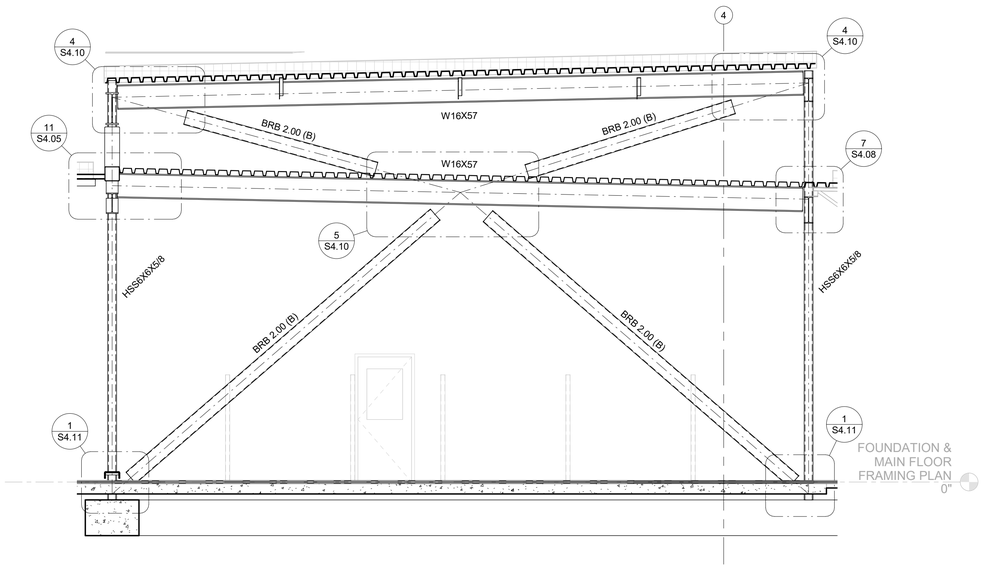

3 BF - 3
1/4" = 1'-0"

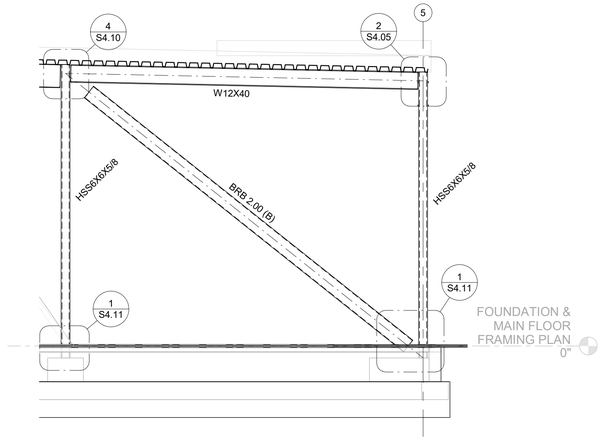

2 BF - 2
1/4" = 1'-0"

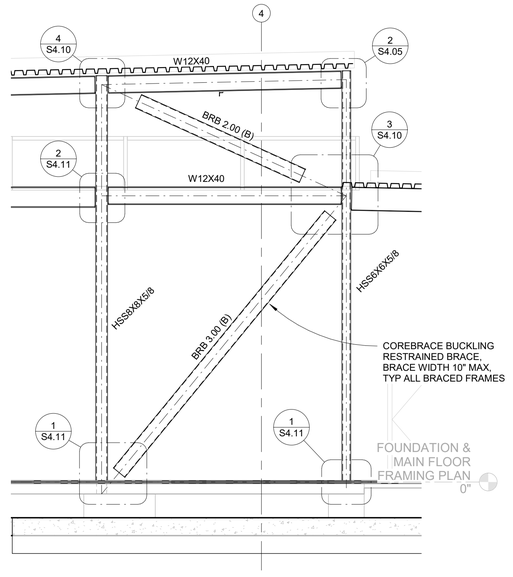

1 BF - 1
1/4" = 1'-0"

ZERVAS
ARCHITECTURE | INTERIOR DESIGN
zervasgroup.com
209 Prospect Street
Bellingham, WA 98225
360.734.4744

KINGWORKS STRUCTURAL ENGINEERS
600 Dupont St, Suite B
Bellingham, WA 98225
360.714.8260
www.king-works.com

DANIEL DAVIS LINKHART
STATE OF WASHINGTON
41390
STRUCTURAL ENGINEER
PROFESSIONAL ENGINEER
1/26/24
DIGITAL SEAL ON PDF FILE

City of Puyallup
Development & Permitting Services
ISSUED PERMIT
Building | Planning
Engineering | Public Works
Fire | Traffic

100% CD SET

REV	ISSUED FOR	Date

PLAN NORTH

SCALE:
1/4" = 1'-0"

PSE - OPERATIONAL TRAINING CENTER

BRACED FRAME ELEVATIONS

PROJECT#.	21239
DRAWN BY:	GK
CHECKED BY:	DL
DATE ISSUED:	1/26/24

S3.01

PRINT: 1/22/2024 9:52:11 AM

© 2024

21239

Autodesk Docs://7222 - 5111 - PSE North Bend Precon Design/230731KW21239 Zervas PSE OTC - Struct - r22.rvt

1/22/2024 9:52:12 AM

PRCNC20240216

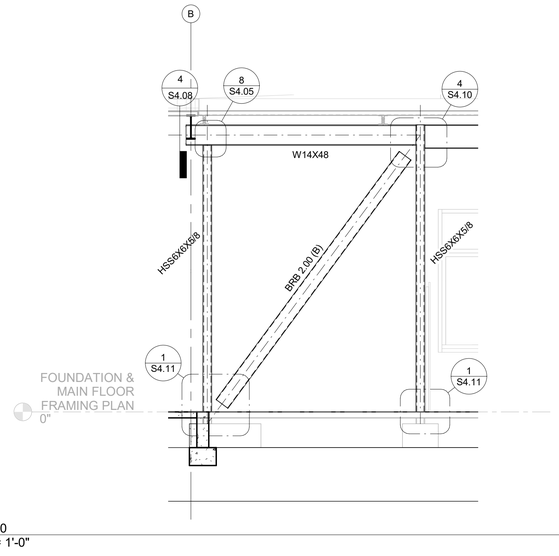

4 BF - 10
1/4" = 1'-0"

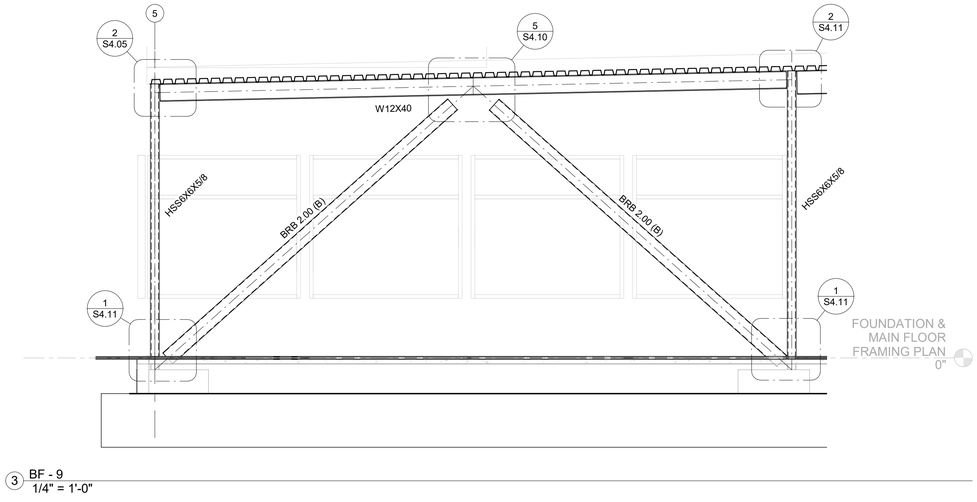

3 BF - 9
1/4" = 1'-0"

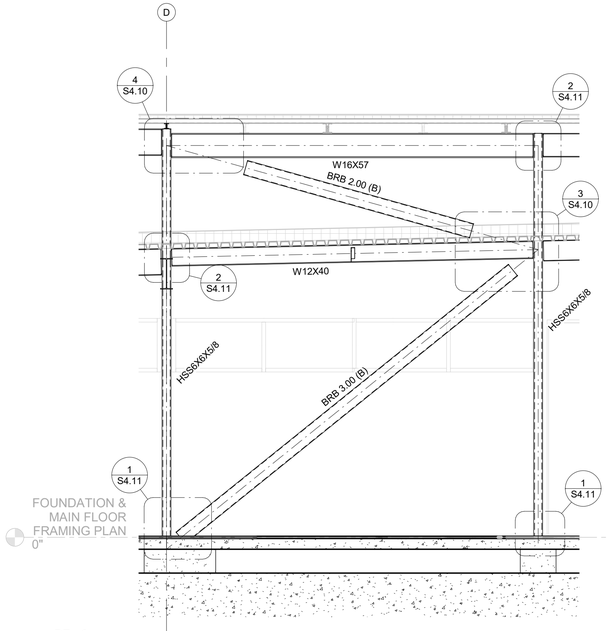

2 BF - 8
1/4" = 1'-0"

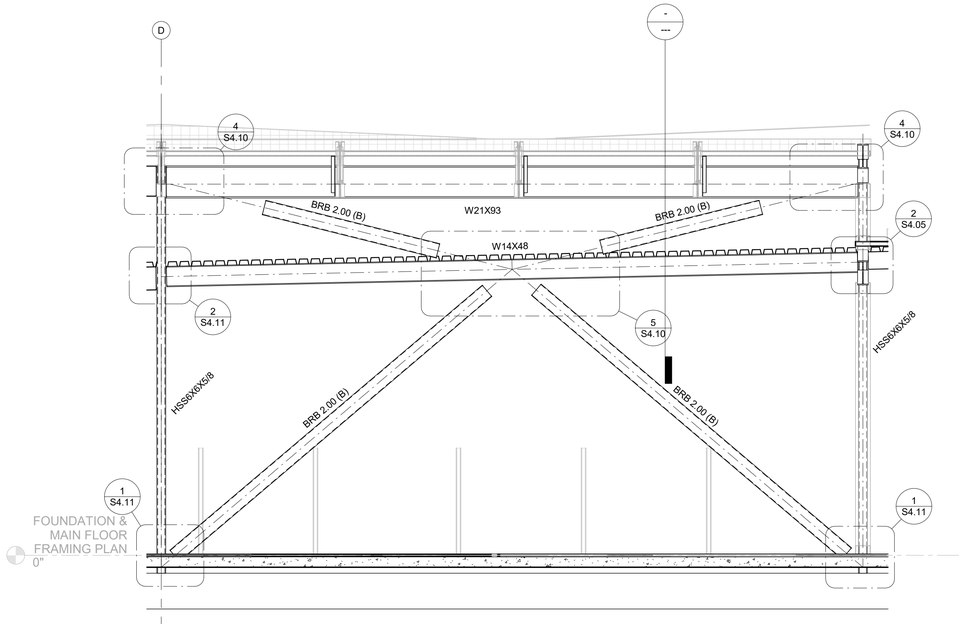

1 BF - 7
1/4" = 1'-0"

ZERVAS
ARCHITECTURE | INTERIOR DESIGN
zervasgroup.com
209 Prospect Street
Bellingham, WA 98225
360.734.4744

KINGWORKS STRUCTURAL ENGINEERS
600 Dupont St, Suite B
Bellingham, WA 98225
360.714.8260
www.king-works.com

DANIEL DAVIS LINKHART
STATE OF WASHINGTON
41390
STRUCTURAL ENGINEER
PROFESSIONAL ENGINEER
1/22/24

DIGITAL SEAL
ON PDF FILE

City of Puyallup
Development & Permitting Services
ISSUED PERMIT
Building | Planning
Engineering | Public Works
Fire | Traffic

100% CD SET

REV	ISSUED FOR	Date

PLAN NORTH

SCALE:
1/4" = 1'-0"

PSE - OPERATIONAL TRAINING CENTER

BRACED FRAME ELEVATIONS

PROJECT#.	21239
DRAWN BY:	GK
CHECKED BY:	DL
DATE ISSUED:	1/26/24

S3.02

PRINT: 1/22/2024 9:52:12 AM

© 2024

21239
Autodesk Docs://7222 - 5111 - PSE North Bend Precon Design/23073IKW21239 Zervas PSE OTC - Struct - r22.rvt

1/22/2024 9:52:14 AM

PRCNC20240216

BUCKLING RESTRAINED BRACE SCHEDULE						
BRACED FRAME	BRACE(S)	CORE AREA	MAX CASING	STIFFNESS FACTOR	ADJUSTMENT FACTORS	
		[in2]	[in]	KF	β	ω
BF-1	LEVEL 2	2.00	8.0	1.60	1.13	1.36
	LEVEL 1	3.00	8.0	1.25	1.17	1.24
BF-2	LEVEL 1	2.00	8.0	1.20	1.11	1.32
BF-3	LEVEL 2	2.00	8.0	1.80	1.11	1.32
	LEVEL 1	2.00	8.0	1.20	1.11	1.32
BF-4	LEVEL 2	2.00	8.0	2.00	1.15	1.37
	LEVEL 1	2.00	8.0	1.25	1.11	1.33
BF-5	LEVEL 1	2.00	8.0	1.25	1.11	1.32
BF-6	LEVEL 2	2.00	8.0	1.85	1.18	1.38
	LEVEL 1	2.00	8.0	1.30	1.11	1.34
BF-7	LEVEL 2	2.00	8.0	1.95	1.11	1.33
	LEVEL 1	2.00	8.0	1.20	1.11	1.32
BF-8	LEVEL 2	2.00	8.0	1.80	1.11	1.31
	LEVEL 1	3.00	8.0	1.20	1.17	1.19
BF-9	LEVEL 1	2.00	8.0	1.20	1.11	1.33
BF-10	LEVEL 1	2.00	8.0	1.25	1.11	1.33
BF-11	LEVEL 2	2.00	8.0	1.85	1.11	1.33
	LEVEL 1	2.00	8.0	1.25	1.11	1.33
BF-12	LEVEL 2	3.50	8.0	1.55	1.11	1.31
	LEVEL 1	2.50	8.0	1.20	1.17	1.20
BF-13	LEVEL 1-2	2.50	8.0	1.15	1.11	1.31
BF-14	LEVEL 2	2.00	8.0	1.65	1.18	1.38

BRB SCHEDULE NOTES

1. CORE MATERIAL SHALL BE ASTM A36 MATERIAL SELECTED TO PROVIDE A MINIMUM TENSILE YIELD STRENGTH OF 38 ksi AND A MAXIMUM TENSILE YIELD STRENGTH OF 46 ksi
2. BRB SUPPLIER SHALL DESIGN BRACE CONNECTIONS IN ACCORDANCE WITH AISC 360-16 & 341-16.
3. BRB SUPPLIER SHALL PROVIDE TEST RESULTS FOR SIMILAR BRACES IN ACCORDANCE WITH AISC 341-16.
4. BRB SUPPLIER SHALL PROVIDE TESTED MATERIAL ADJUSTMENT FACTORS FOR COMPRESSION STRENGTH (β) AND STRAIN HARDENING (ω) PER THE TABLE ABOVE. OVERSTRENGTH FACTORS TO BE DETERMINED AT THE GREATER OF 2x DESIGN STORY DRIFT AND 2% STORY DRIFT PER AISC 341-16.
5. STIFFNESS MODIFICATION FACTORS (Kf) ARE DESIGN VALUES. ACTUAL VALUES TO BE WITHIN ±10%.. ACTUAL STIFFNESS WP TO WP (Keff) CALCULATED AS: Keff = Kf*Asc*E/Lwp WHERE Lwp IS THE WP TO WP LENGTH AND Asc IS THE SPECIFIED CORE AREA.
6. MINIMUM STROKE = 3.0 INCHES FOR ALL BRACES, TO OCCUR AT EACH END OF BRACE IN TENSION AND COMPRESSION DIRECTIONS. CORE EXTENSION TO REMAIN STABLE OVER 2X THIS LENGTH.
7. ALL BRB'S SHALL HAVE FIELD BOLTED END CONNECTIONS.

5 BUCKLING RESTRAINED BRACE SCHEDULE
1/2" = 1'-0"

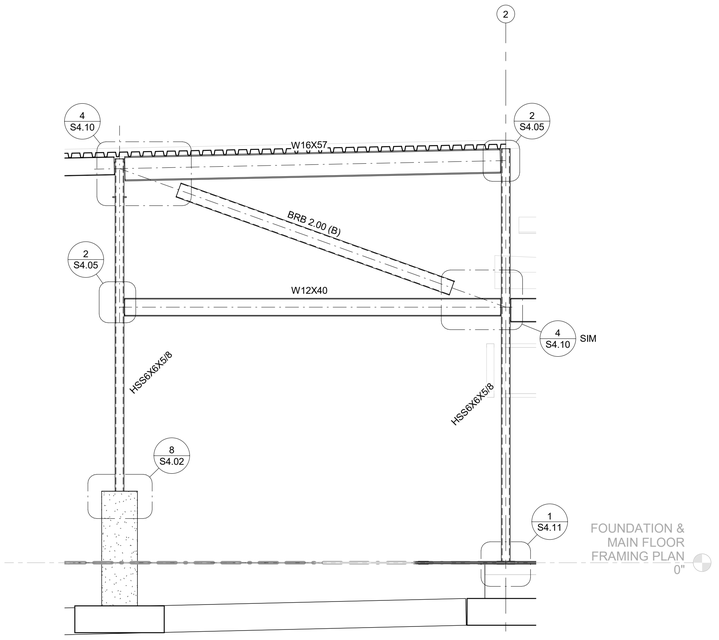

4 BF - 14
1/4" = 1'-0"

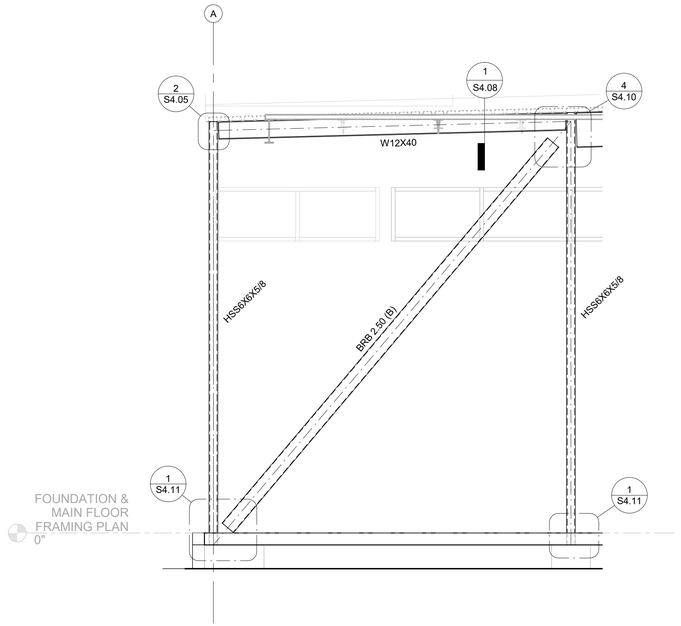

3 BF - 13
1/4" = 1'-0"

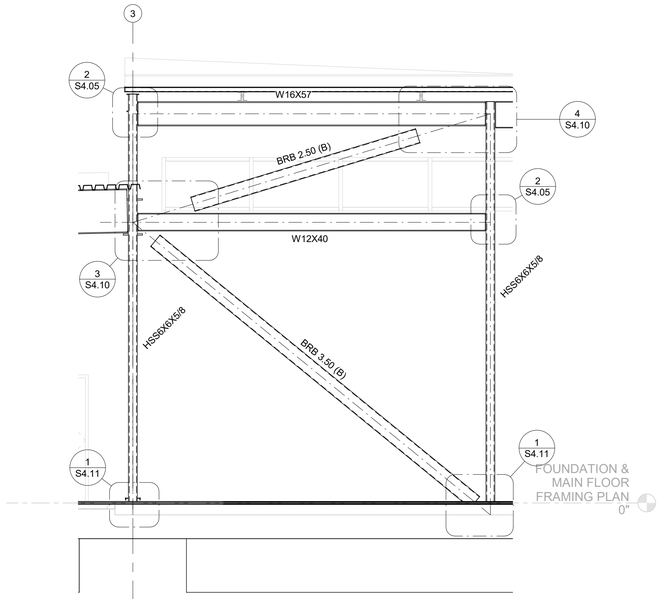

2 BF - 12
1/4" = 1'-0"

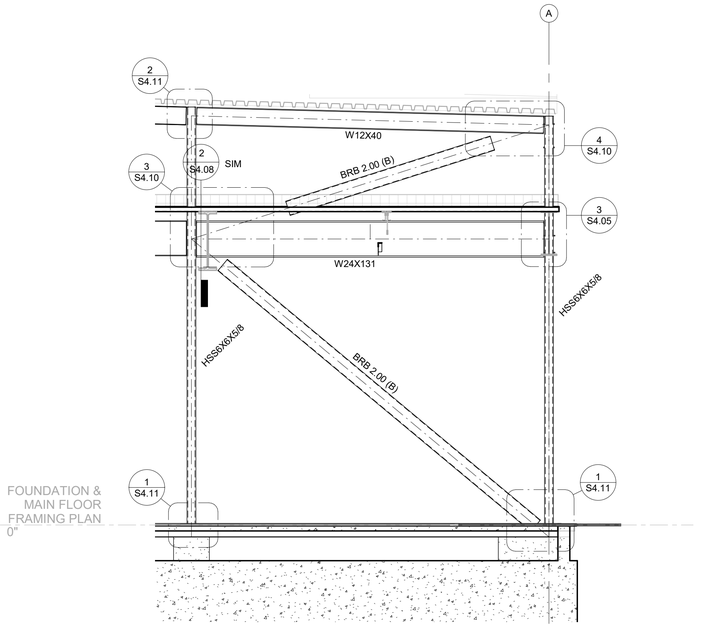

1 BF - 11
1/4" = 1'-0"

ZERVAS
ARCHITECTURE | INTERIOR DESIGN
zervasgroup.com
209 Prospect Street
Bellingham, WA 98225
360.734.4744

KINGWORKS STRUCTURAL ENGINEERS
600 Dupont St, Suite B
Bellingham, WA 98225
360.714.8260
www.king-works.com

DANIEL DAVIS LINKHART
STATE OF WASHINGTON
41390
STRUCTURAL ENGINEER
PROFESSIONAL ENGINEER
1/22/24

DIGITAL SEAL
ON PDF FILE

City of Puyallup
Development & Permitting Services
ISSUED PERMIT
Building | Planning
Engineering | Public Works
Fire | Traffic

100% CD SET

REV	ISSUED FOR	Date

PLAN NORTH

SCALE:
As indicated

PSE - OPERATIONAL TRAINING CENTER

BRACED FRAME ELEVATIONS

PROJECT#.	21239
DRAWN BY:	GK
CHECKED BY:	DL
DATE ISSUED:	1/26/24

S3.03

PRINT: 1/22/2024 9:52:14 AM

© 2024

21239
Autodesk Docs://7222 - 5111 - PSE North Bend Precon Design/230731KW21239 Zervas PSE OTC - Struct - r22.rvt

PRCNC20240216

1/22/2024 9:52:14 AM

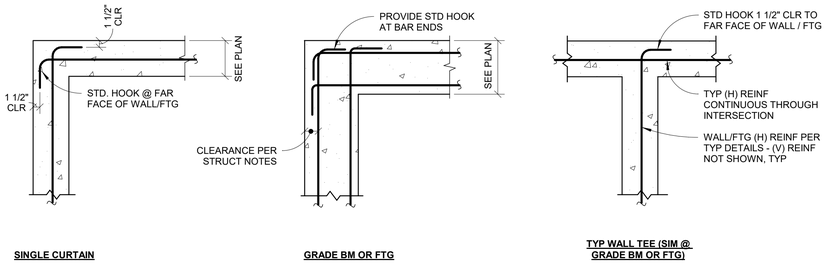

SINGLE CURTAIN | **GRADE BM OR FTG** | **TYP WALL TEE (SIM @ GRADE BM OR FTG)**

6 TYP CONC REINF AT CORNERS/TEES
3/4" = 1'-0"

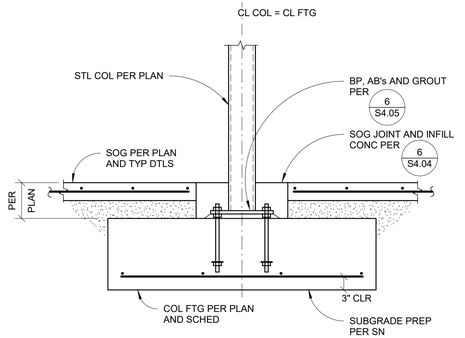

5 TYP INT STL COLUMN FTG
3/4" = 1'-0"

f'c ≤ 3,500 PSI CONCRETE

BAR SIZE	DEVELOPMENT LENGTHS (Ld) TOP	DEVELOPMENT LENGTHS (Ld) OTHER	LAP SPLICE LENGTHS (Ls) TOP	LAP SPLICE LENGTHS (Ls) OTHER
#3	16 in	12 in	18 in	16 in
#4	22 in	18 in	28 in	22 in
#5	32 in	24 in	42 in	32 in
#6	43 in	33 in	56 in	43 in
#7	69 in	53 in	90 in	69 in
#8	86 in	66 in	111 in	86 in
#9	103 in	80 in	135 in	103 in
#10	124 in	96 in	162 in	124 in
#11	146 in	112 in	190 in	146 in

f'c ≥ 4,000 PSI CONCRETE

BAR SIZE	DEVELOPMENT LENGTHS (Ld) TOP	DEVELOPMENT LENGTHS (Ld) OTHER	LAP SPLICE LENGTHS (Ls) TOP	LAP SPLICE LENGTHS (Ls) OTHER
#3	16 in	12 in	18 in	16 in
#4	20 in	15 in	24 in	20 in
#5	28 in	22 in	36 in	28 in
#6	38 in	30 in	50 in	38 in
#7	60 in	46 in	78 in	60 in
#8	74 in	57 in	96 in	74 in
#9	90 in	69 in	116 in	90 in
#10	108 in	83 in	140 in	108 in
#11	126 in	97 in	164 in	126 in

NOTES
1. TABULATED VALUES ARE APPLICABLE FOR GRADE 60 UNCOATED REINF BARS.
2. BAR C/C SPACING MUST BE GREATER THAN TWICE THE BAR DIAMETER AND COVER GREATER THAN ONE BAR DIAMETER.
3. "TOP" BARS ARE DEFINED AS HORIZONTAL BARS WITH MORE THAN 12 INCHES OF FRESH CONCRETE CAST BELOW THE BARS, INCLUDING WALL HORIZONTALS.
4. AT LOCATIONS WHERE Ld IS CALLED OUT BUT CANNOT BE ACHIEVED, EXTEND BAR AS FAR AS POSSIBLE AND PROVIDE STANDARD HOOK PER TYP DETAIL.

3 TYP CONC REINF DEVELOPMENT/SPLICE LENGTHS
3/4" = 1'-0"

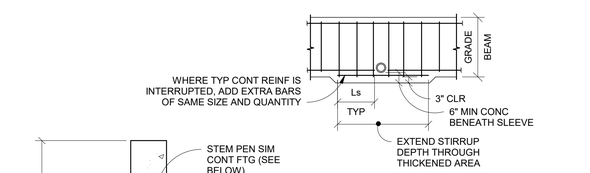

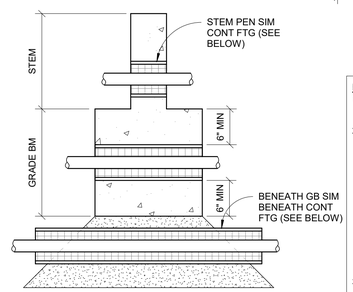

ALLOWABLE PENETRATIONS AT GRADE BEAM

NOTE
1. PROVIDE SLEEVES w/ ID 2" LARGER THAN PIPE OD. CENTER PIPE AND WRAP w/ COMPRESSIBLE MATERIAL.
2. ADJACENT PENETRATIONS THROUGH STEMWALL SHALL BE SPACED TO PERMIT 6" MIN REMAINING CONCRETE BETWEEN THEM. IF CLOSER PENETRATION SPACING IS REQUIRED, OR IF ANY TYP REINF REQUIRES INTERRUPTION, SUCH LOCATIONS SHALL BE CLEARLY INDICATED ON THE SUBMITTED REINFORCING SHOP DRAWINGS; THE ENGINEER SHALL REVIEW THE SHOP DRAWING FOR ADEQUACY AND ADD REINFORCING AS REQUIRED. FOR BIDDING PURPOSES ONLY, INCLUDE (2) ADD'L #4 x 6'-0" ON EACH SIDE OF EACH MULTIPLE-PIPE PENETRATION.
3. FIGURE BELOW SHOWS ACCEPTABLE PENETRATION LOCATIONS THROUGH STEM OR BELOW FTG:

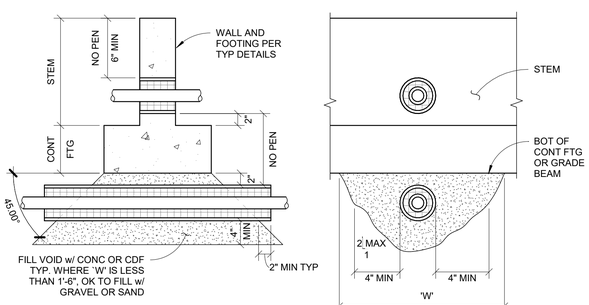

ALLOWABLE PENETRATIONS AT CONT FOOTING

2 TYP UTILITIES AT FOUNDATIONS
1" = 1'-0"

NOTE
STRUCTURAL FILL BENEATH ALL FOUNDATIONS SHALL BE AS RECOMMENDED BY THE GEOTECH AFTER INSPECTION OF THE EXCAVATION, BUT NOT LESS THAN DIMENSIONS SHOWN BELOW

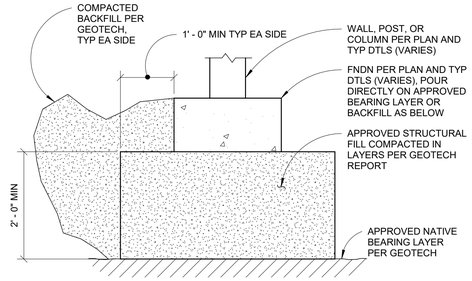

7 TYP STRUCTURAL FILL BELOW FTGS
3/4" = 1'-0"

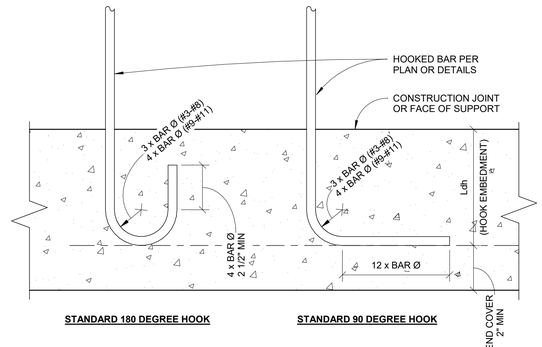

STANDARD 180 DEGREE HOOK | **STANDARD 90 DEGREE HOOK**

BAR SIZE	STANDARD HOOK EMBEDMENT (Ldh) CONC DESIGN STRENGTH (f'c) 3,000 PSI	4,000 PSI	5,000 PSI	6,000 PSI
#3	6"	6"	6"	6"
#4	8"	7"	6"	6"
#5	10"	9"	8"	7"
#6	12"	10"	9"	9"
#7	14"	12"	11"	10"
#8	16"	14"	12"	11"
#9	18"	15"	14"	13"
#10	20"	17"	16"	14"
#11	22"	19"	17"	16"

NOTES
1. FOR CONC STRENGTHS NOT INDICATED, USE NEXT LOWEST TABULATED f'c VALUE.
2. PROVIDE 2 1/2" SIDE COVER AND 2" END COVER FOR HOOKS.
3. TABULATED VALUES ARE APPLICABLE FOR GRADE 60 UNCOATED REINF BARS.

4 TYP REINFORCING - STANDARD HOOKS
3" = 1'-0"

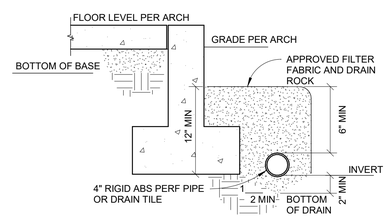

- INVERT MUST BE BELOW FLOOR LEVEL.
- BOTTOM OF DRAIN MUST BE BELOW BOTTOM OF BASE.

PERIMETER FOUNDATION DRAIN NOTES
1. DRAIN PIPES ABOVE MUST DISCHARGE BY GRAVITY OR MECHANICAL MEANS TO AN APPROVED DRAINAGE SYSTEM THAT COMPLIES WITH THE INTERNATIONAL PLUMBING CODE
2. MINIMUM SLOPE FOR DRAIN PIPE RUNS IS 0.25%
3. DO NOT CONNECT FOUNDATION DRAIN SYSTEMS TO RAIN LEADERS OR DOWN SPOUTS.
4. PROVIDE APPROVED CLEANOUTS FOR ALL DRAIN PIPE AT ENDS, CORNERS, AND NO MORE THAN 120' ON CENTER.
5. SEE CIVIL DRAWINGS FOR GRADES AND DISCHARGE POINTS. SEE GEOTECHNICAL REPORT FOR ADDITIONAL REQUIREMENTS.
6. SUBMIT A FOUNDATION DRAINAGE PLAN TO THE ARCHITECT FOR REVIEW.
7. DRAIN ROCK/BASE MATERIAL CONSISTS OF GRAVEL OR STONE WITH LESS THAN 10% OF MATERIAL PASSING THROUGH A NUMBER 4 SIEVE.

1 TYP PERIMETER FOUNDATION DRAINS
1" = 1'-0"

ZERVAS
ARCHITECTURE | INTERIOR DESIGN
zervasgroup.com
209 Prospect Street
Bellingham, WA 98225
360.734.4744

KINGWORKS STRUCTURAL ENGINEERS
600 Dupont St, Suite B
Bellingham, WA 98225
360.714.8260
www.king-works.com

DANIEL DAVIS LINKHART — STATE OF WASHINGTON — 41390 — STRUCTURAL ENGINEER — PROFESSIONAL ENGINEER — 1/22/24

DIGITAL SEAL ON PDF FILE

City of Puyallup
Development & Permitting Services
ISSUED PERMIT

Building	Planning
Engineering	Public Works
Fire	Traffic

100% CD SET

REV	ISSUED FOR	Date

PLAN NORTH

SCALE: As indicated

PSE - OPERATIONAL TRAINING CENTER

FOUNDATION DETAILS

PROJECT#.	21239
DRAWN BY:	GK
CHECKED BY:	DL
DATE ISSUED:	1/26/24

S4.01

PRINT. 1/22/2024 9:52:14 AM

© 2024

21239

Autodesk Docs://7222 - 5111 - PSE North Bend Precon Design/230731KW21239 Zervas PSE OTC - Struct - r22.rvt

1/22/2024 9:52:15 AM

Welding to be done by an individual or fabricator who is WABO certified or approved by the Building Official to perform the work. All welds must be inspected and approved by a WABO certified special inspector.

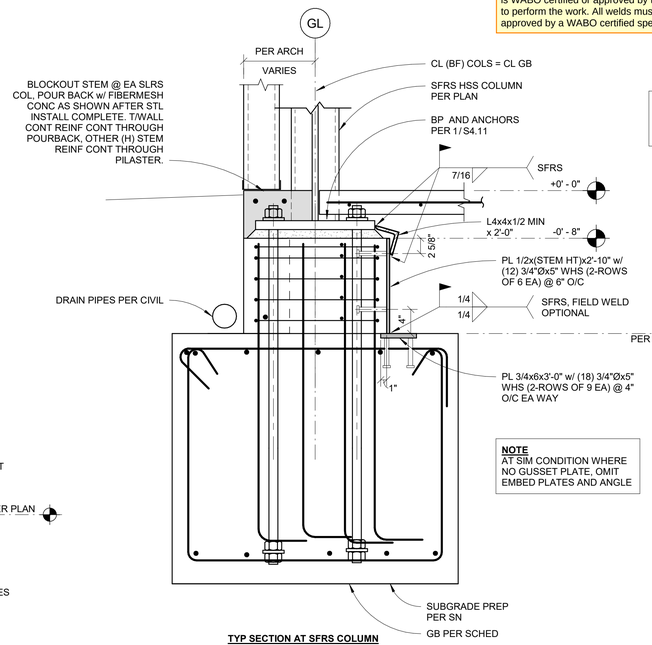

NOTE
AT SIM CONDITION WHERE NO GUSSET PLATE, OMIT EMBED PLATES AND ANGLE

TYP SECTION AT SFRS COLUMN

NOTE
SEE 3/S4.02 FOR BALANCE OF INFO

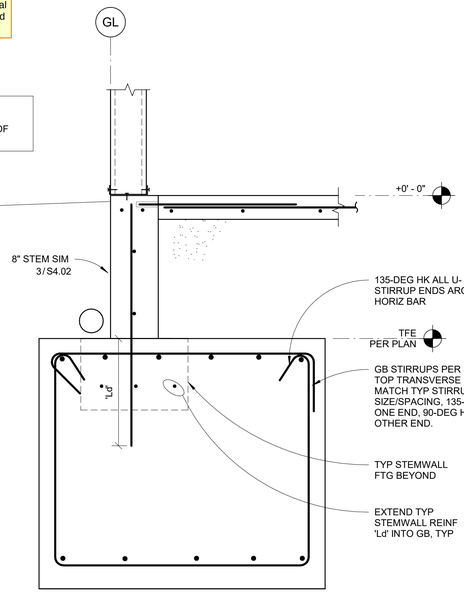

TYP WALL SECTION AT GB (2-LEG CLOSED STIRRUP CONFIGURATION SHOWN)

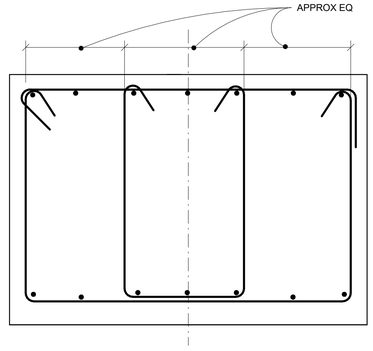

SIM @ 4-LEG CLOSED STIRRUP CONFIGURATION

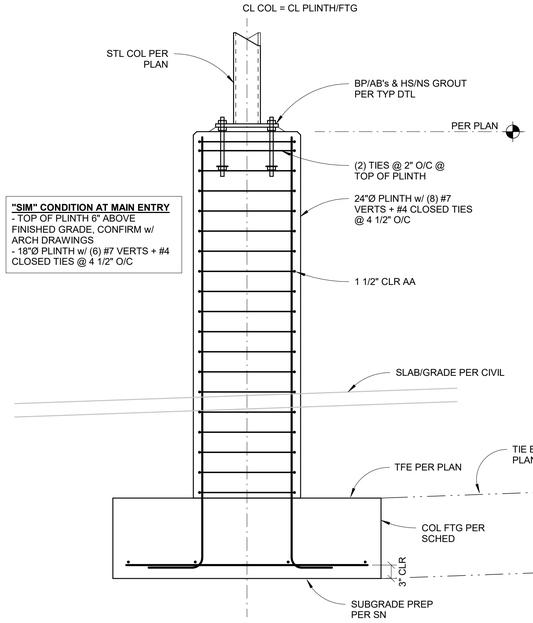

"SIM" CONDITION AT MAIN ENTRY
- TOP OF PLINTH 6" ABOVE FINISHED GRADE, CONFIRM w/ ARCH DRAWINGS
- 18"Ø PLINTH w/ (6) #7 VERTS + #4 CLOSED TIES @ 4 1/2" O/C

7 TYP PERIMETER SECTION AT GRADE BEAM
1" = 1'-0"

8 TYP EXTERIOR STL COL ON PLINTH FTG
3/4" = 1'-0"

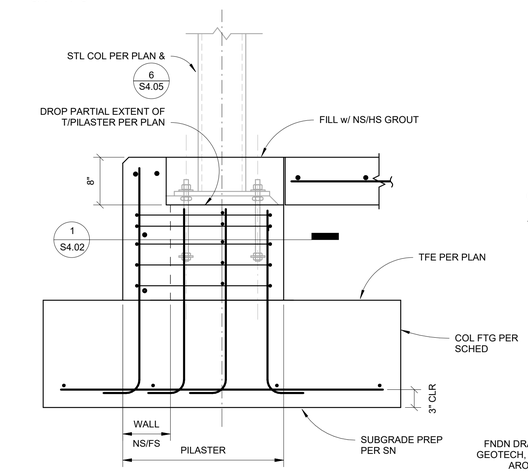

4 TYP SECTION AT PILASTER
1" = 1'-0"

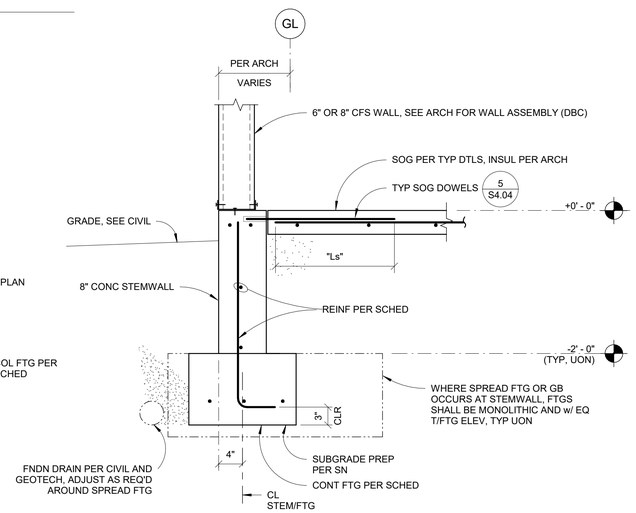

3 TYP PERIMETER STEMWALL AND FTG
1" = 1'-0"

NOTE
AT CROSS-TIES, ALTERNATE 135° HK ENDS IN EA SUCCESSIVE LAYER

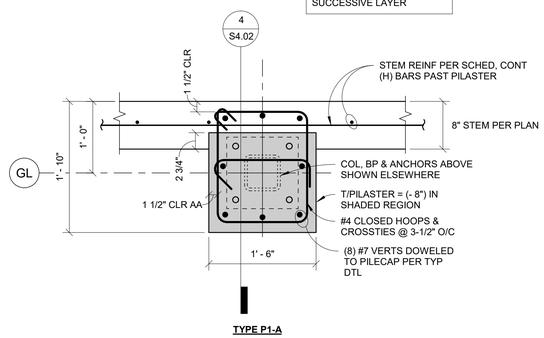

TYPE P1-A

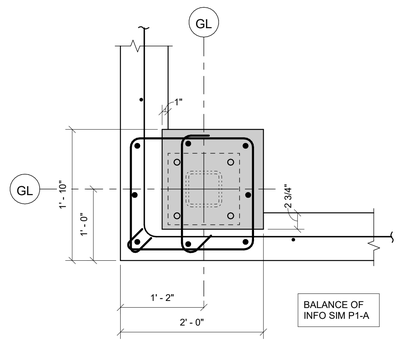

TYPE P1-C

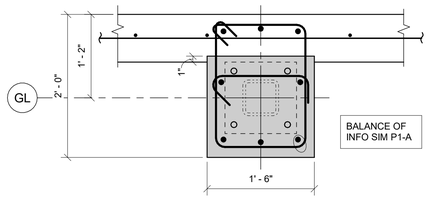

TYPE P1-B

1 TYP PILASTER - TYPE 'P1'
1" = 1'-0"

ZERVAS
ARCHITECTURE | INTERIOR DESIGN
zervasgroup.com
209 Prospect Street
Bellingham, WA 98225
360.734.4744

KINGWORKS STRUCTURAL ENGINEERS
600 Dupont St, Suite B
Bellingham, WA 98225
360.714.8260
www.king-works.com

DANIEL DAVIS LINKHART
STATE OF WASHINGTON
41390
STRUCTURAL ENGINEER
PROFESSIONAL ENGINEER
1/22/24
DIGITAL SEAL ON PDF FILE

City of Puyallup
Development & Permitting Services
ISSUED PERMIT
Building | Planning | Engineering | Public Works | Fire | Traffic

100% CD SET

REV	ISSUED FOR	Date

PLAN NORTH

SCALE: As indicated

PSE - OPERATIONAL TRAINING CENTER

FOUNDATION DETAILS

PROJECT#.	21239
DRAWN BY:	GK
CHECKED BY:	DL
DATE ISSUED:	1/26/24

S4.02

PRINT. 1/22/2024 9:52:15 AM

© 2024

Autodesk Docs://7222 - 5111 - PSE North Bend Precon Design/21239731KW21239 Zervas PSE OTC - Struct - r22.rvt

PRCNC20240216

1/22/2024 9:52:16 AM

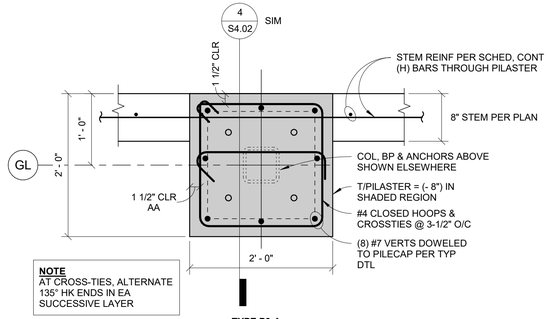

TYPE P3-A

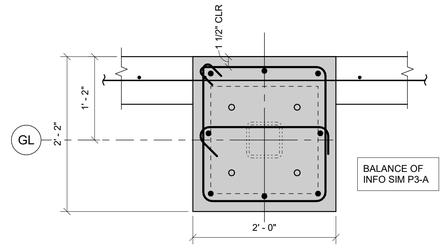

TYPE P3-B

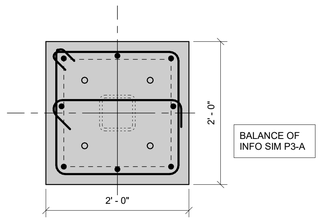

TYPE P3-C

3 TYP PILASTER - TYPE 'P3'
1" = 1'-0"

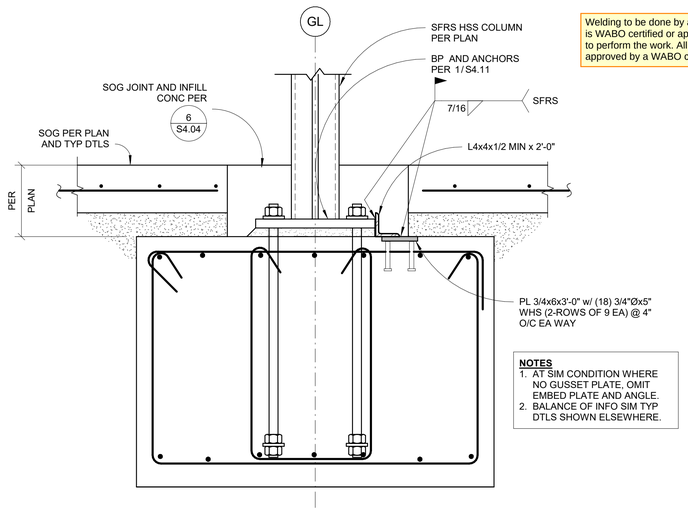

Welding to be done by an individual or fabricator who is WABO certified or approved by the Building Official to perform the work. All welds must be inspected and approved by a WABO certified special inspector.

2 TYP INTERIOR BRBF COL AT GRADE BEAM
1" = 1'-0"

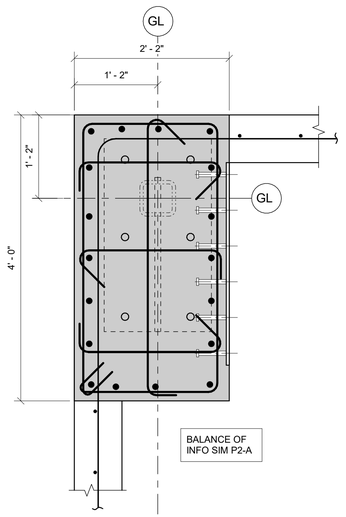

TYPE P2-D

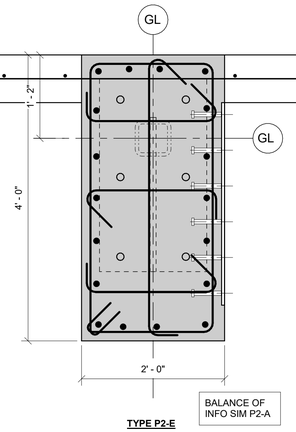

TYPE P2-E

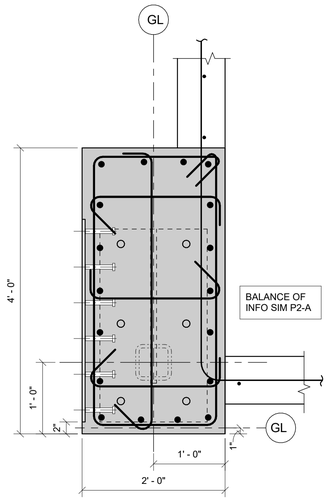

TYPE P2-F

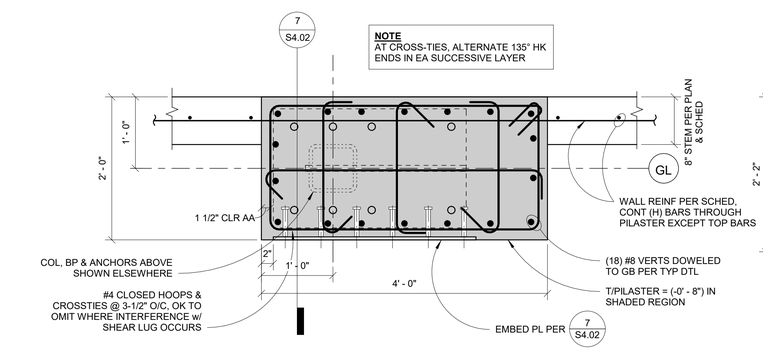

TYPE P2-A

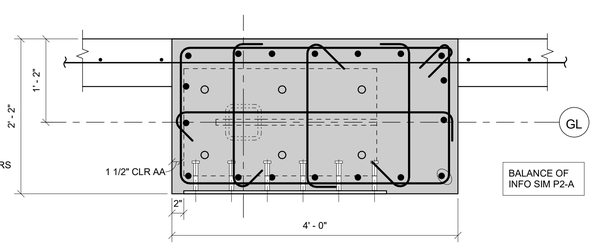

TYPE P2-B

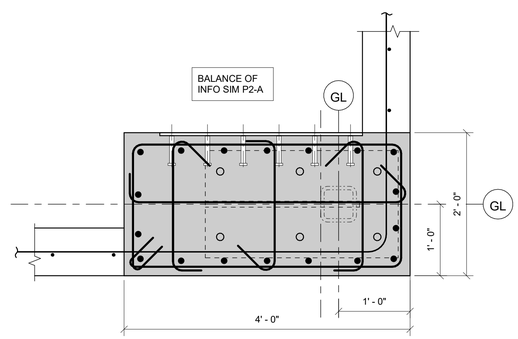

TYPE P2-C

1 TYP PILASTER - TYPE 'P2'
1" = 1'-0"

ZERVAS
ARCHITECTURE | INTERIOR DESIGN
zervasgroup.com
209 Prospect Street
Bellingham, WA 98225
360.734.4744

KINGWORKS STRUCTURAL ENGINEERS
600 Dupont St, Suite B
Bellingham, WA 98225
360.714.8260
www.king-works.com

DANIEL DAVIS LINKHART
STATE OF WASHINGTON
41390
STRUCTURAL ENGINEER
PROFESSIONAL ENGINEER
1/26/24
DIGITAL SEAL ON PDF FILE

City of Puyallup
Development & Permitting Services
ISSUED PERMIT

Building	Planning
Engineering	Public Works
Fire	Traffic

100% CD SET

REV	ISSUED FOR	Date

PLAN NORTH

SCALE:
1" = 1'-0"

PSE - OPERATIONAL TRAINING CENTER

FOUNDATION DETAILS

PROJECT#:	21239
DRAWN BY:	GK
CHECKED BY:	DL
DATE ISSUED:	1/26/24

S4.03

PRINT: 1/22/2024 9:52:16 AM

© 2024

21239

Autodesk Docs://7222 - 5111 - PSE North Bend Precon Design/230731KW21239 Zervas PSE OTC - Struct - r22.rvt

1/22/2024 9:52:17 AM

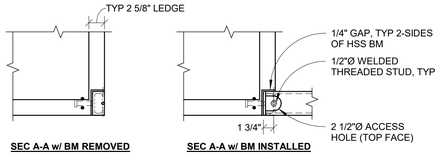

9 TRENCH GRID - TYP BEAMS AT CORNERS/TEES
1" = 1'-0"

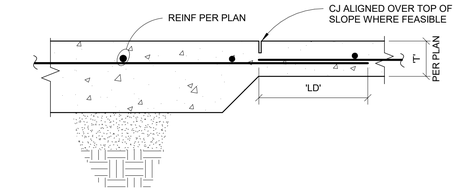

8 TYP SOG DEPTH TRANSITION
1 1/2" = 1'-0"

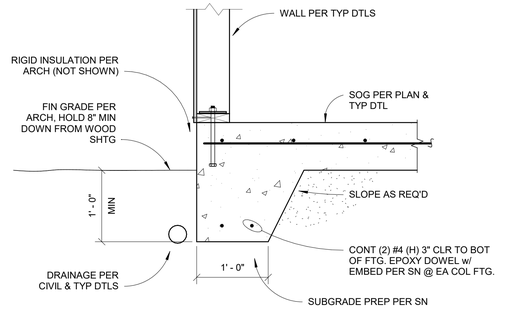

7 TYP PERIMETER WOOD WALL AT TSE
1" = 1'-0"

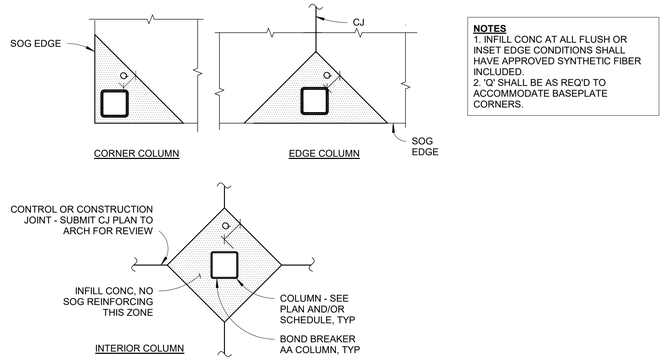

NOTES
1. INFILL CONC AT ALL FLUSH OR INSET EDGE CONDITIONS SHALL HAVE APPROVED SYNTHETIC FIBER INCLUDED.
2. 'O' SHALL BE AS REQ'D TO ACCOMMODATE BASEPLATE CORNERS.

6 TYP SOG JOINTS @ COLUMNS
3/4" = 1'-0"

NOTE
LOCATE STEM REINF TO AVOID DRILLING CONFLICT.

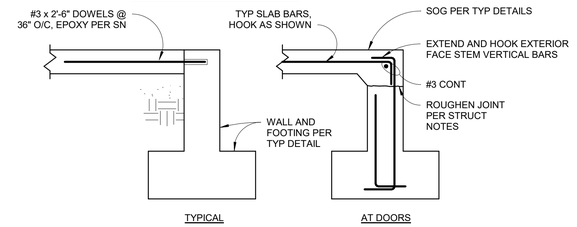

5 TYP SLAB TO STEM DOWELS
1" = 1'-0"

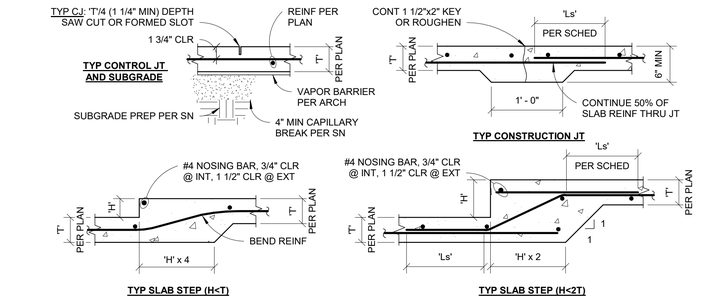

NOTE
1. PLACE CONTROL JOINTS AND CONST JOINTS AT NO MORE THAN 12'-0" O/C, EW. ALIGN JOINTS WITH COLS AND SLAB CORNERS WHERE POSSIBLE.
2. CUT CJ's AFTER CONC HAS SUFFICIENTLY HARDENED TO PREVENT SPALLING OR TEARING BUT NO MORE THAN 12 HOURS AFTER POUR.
3. SUBMIT A SLAB PLAN SHOWING CONTROL & CONSTRUCTION JOINT LAYOUT AND POUR SEQUENCE FOR APPROVAL.
4. THE SUBGRADE SHOWN ABOVE SHALL BE THE MINIMUM REQUIRED AT ANY LOCATION, AND SHALL BE INCREASED OR MODIFIED AS RECOMMENDED IN THE GEOTECH. REPORT.
5. SEE SPEC AND ARCH/MECH/CIVIL DRAWINGS FOR SLAB EXTENTS, SLOPES, STEPS, DRAINS, ELEVATIONS, CHAMFERS, FINISHES AND OTHER RELATED INFORMATION. MAINTAIN MIN THICKNESS PER PLAN THROUGHOUT.
6. WHERE SINGLE PENETRATION (OR COMBINED GROUPING OF MULTIPLE PENETRATIONS, SUCH AS AT GROUPS OF PIPES OR CONDUIT) LARGER THAN 10" ANY DIRECTION, PROVIDE ADD'L #3 EA SIDE EXTENDING 18" MIN BEYOND THE PENETRATION EXTENTS.
7. AT INT CORNERS, PROVIDE (2) ADD'L #3x36" @ 2" O/C, PLACED AT 45-DEG AND 2" CLR TO THE INT CORNER OF SOG.
8. EXTERIOR SOG OR SIDEWALK - SEE CIVIL DRAWINGS.

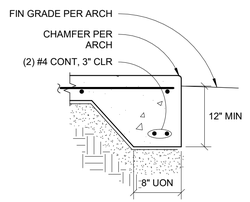

TYP THICKENED SLAB EDGE

4 TYP SLAB-ON-GRADE DETAILS
1" = 1'-0"

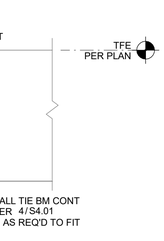

3 TYP TIE BEAM AT FTG OR GRADE BM
1" = 1'-0"

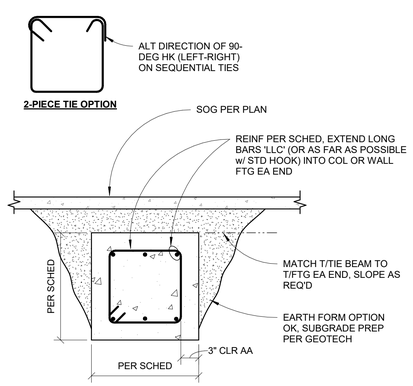

2 TYP FOUNDATION TIE BEAM
1" = 1'-0"

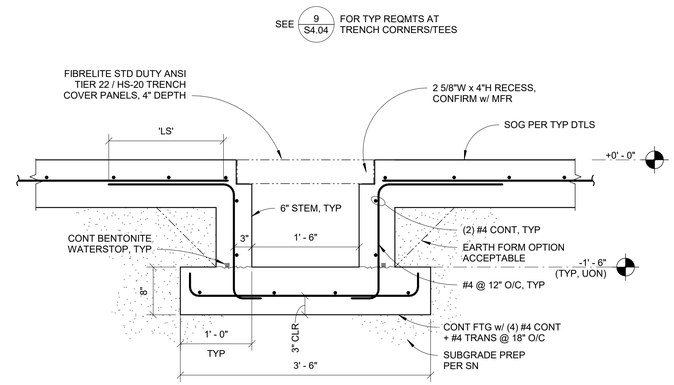

1 TRENCH GRID SECTION
1" = 1'-0"

ZERVAS
ARCHITECTURE | INTERIOR DESIGN
zervasgroup.com
209 Prospect Street
Bellingham, WA 98225
360.734.4744

KINGWORKS STRUCTURAL ENGINEERS
600 Dupont St, Suite B
Bellingham, WA 98225
360.714.8260
www.king-works.com

DANIEL DAVIS LINKHART — STATE OF WASHINGTON — 41390 — STRUCTURAL ENGINEER — PROFESSIONAL ENGINEER — 1/22/24
DIGITAL SEAL ON PDF FILE

City of Puyallup
Development & Permitting Services
ISSUED PERMIT
Building | Planning | Engineering | Public Works | Fire | Traffic

100% CD SET

REV	ISSUED FOR	Date

PLAN NORTH

SCALE:
As indicated

PSE - OPERATIONAL TRAINING CENTER

FOUNDATION DETAILS

PROJECT#:	21239
DRAWN BY:	GK
CHECKED BY:	DL
DATE ISSUED:	1/26/24

S4.04

PRINT: 1/22/2024 9:52:17 AM

© 2024

21239
Autodesk Docs://7222 - 5111 - PSE North Bend Precon Design/230731KW21239 Zervas PSE OTC - Struct - r22.rvt

PRCNC20240216

1/22/2024 9:52:18 AM

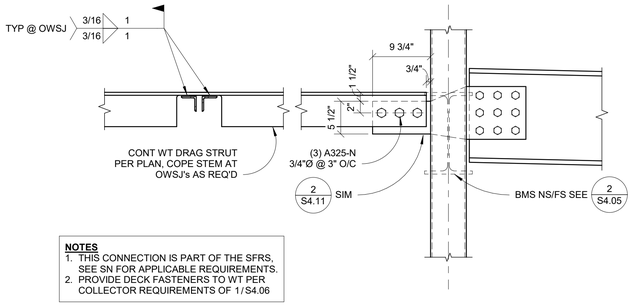

NOTES
1. THIS CONNECTION IS PART OF THE SFRS, SEE SN FOR APPLICABLE REQUIREMENTS.
2. PROVIDE DECK FASTENERS TO WT PER COLLECTOR REQUIREMENTS OF 1/S4.06

11 DRAG STRUT CONN @ GRIDS 3.1 & C.1
1" = 1'-0"

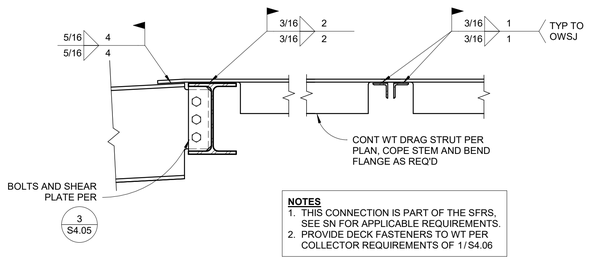

NOTES
1. THIS CONNECTION IS PART OF THE SFRS, SEE SN FOR APPLICABLE REQUIREMENTS.
2. PROVIDE DECK FASTENERS TO WT PER COLLECTOR REQUIREMENTS OF 1/S4.06

10 DRAG STRUT CONN @ GRIDS 2 & A.1
1" = 1'-0"

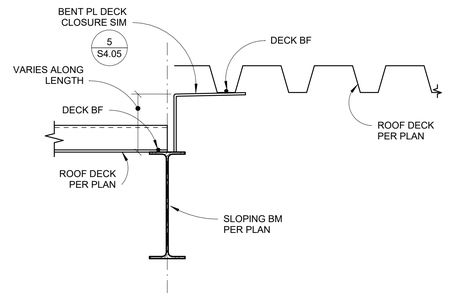

9 DECK STEP AT LOW ROOF
1 1/2" = 1'-0"

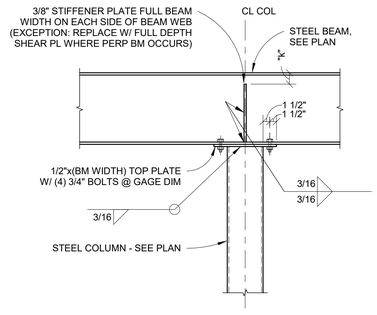

8 TYP CONT BEAM OVER COLUMN
3/4" = 1'-0"

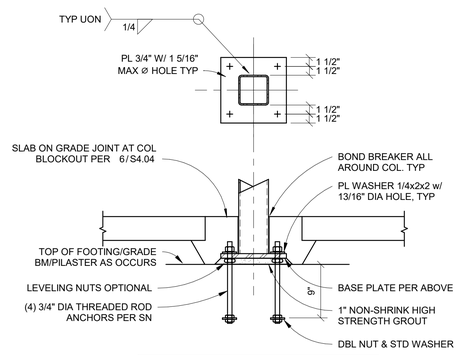

NOTE
THIS DETAIL DOES NOT APPLY TO BRACED FRAME OR VILLAGE STRUCTURE BASEPLATES, SEE DETAILS ELSEWHERE.

6 TYP COL BASE ON SPREAD FTG (NON-SLRS)
1" = 1'-0"

Welding to be done by an individual or fabricator who is WABO certified or approved by the Building Official to perform the work. All welds must be inspected and approved by a WABO certified special inspector.

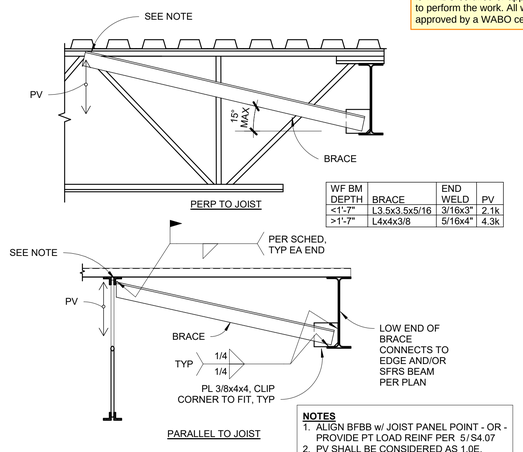

WF BM DEPTH	BRACE	END WELD	PV
<1'-7"	L3.5x3.5x5/16	3/16x3"	2.1k
>1'-7"	L4x4x3/8	5/16x4"	4.3k

NOTES
1. ALIGN BFBB w/ JOIST PANEL POINT - OR - PROVIDE PT LOAD REINF PER 5/S4.07
2. PV SHALL BE CONSIDERED AS 1.0E, 1.0W, OR 1.6S, WHICHEVER HAS THE GREATEST EFFECT
3. SIM WHERE UPPER END OF BFBB CONNECTS TO WT SECTION.

7 TYP BOTTOM FLANGE BEAM BRACING (BFBB)
1" = 1'-0"

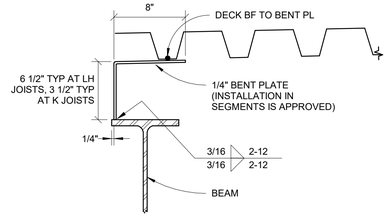

NOTES
1. THIS DETAIL IS FOR USE WHERE TOP OF STEEL BEAMS ARE NOT AT BOTTOM OF DECK. ORIENTATION AND POSITION ON FLANGE MAY VARY AS NEEDED TO FACILITATE ERECTION.
2. LAYOUT DECK TO ENSURE 2" MIN DECK BEARING AT ALL SUPPORTS AND CLOSURE PLATES.
3. WHERE BENT PL IS INSTALLED IN SEGMENTS BETWEEN OWSJ's OR OTHER FRAMING MEMBERS, PROVIDE 2" MAX GAP EA END BETWEEN BENT PL & MEMBERS.
4. ADJUST HEIGHT OR WIDTH OF PLATE AS REQ'D, SUBMIT FOR REVIEW.

5 TYP BENT PLATE DECK CLOSURE
1 1/2" = 1'-0"

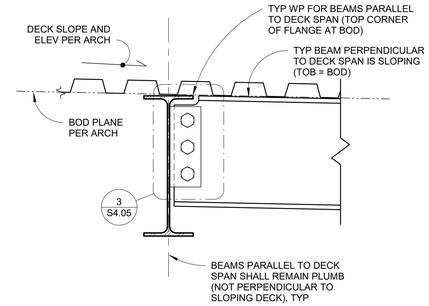

4 TYP ROOF BEAM ORIENTATION AND ALIGNMENT
1 1/2" = 1'-0"

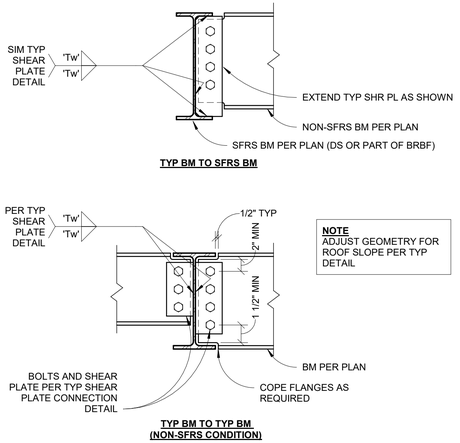

NOTE
ADJUST GEOMETRY FOR ROOF SLOPE PER TYP DETAIL

3 TYP SHEAR PLATE - WF TO WF
1" = 1'-0"

NOTE
ADJUST GEOMETRY FOR ROOF SLOPE AS REQ'D

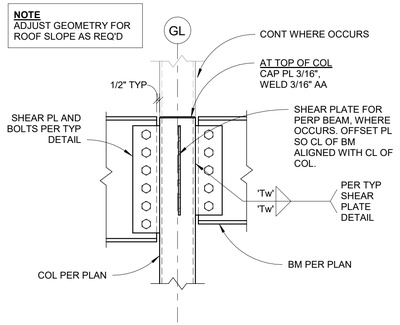

2 TYP SHEAR PLATE - WF TO COL
1" = 1'-0"

SUPPORTED BEAM SIZE	'Tp'	E	'Tw'	NO OF BOLTS (n)	TYPE
C8/W8	1/4"	1 1/4"	3/16"	(2)	3/4"Ø A325-N
C10/W10	1/4"	1 1/4"	3/16"	(2)	3/4"Ø A325-N
C12/W12	1/4"	1 1/4"	3/16"	(3)	3/4"Ø A325-N
W14-W16	1/4"	1 1/4"	3/16"	(3)	3/4"Ø A325-N
W18-W21	1/4"	1 1/4"	3/16"	(4)	3/4"Ø A325-N
W24	1/4"	1 1/4"	3/16"	(5)	3/4"Ø A325-N
W27	1/4"	1 1/4"	3/16"	(6)	3/4"Ø A325-N
W30	1/4"	1 1/4"	3/16"	(6)	3/4"Ø A325-N
W40	1/4"	1 1/4"	3/16"	(6)	3/4"Ø A325-N

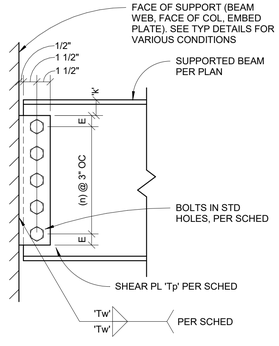

1 TYP SHEAR PLATE CONNECTION
1 1/2" = 1'-0"

ZERVAS
ARCHITECTURE | INTERIOR DESIGN
zervasgroup.com
209 Prospect Street
Bellingham, WA 98225
360.734.4744

KINGWORKS STRUCTURAL ENGINEERS
600 Dupont St, Suite B
Bellingham, WA 98225
360.714.8260
www.king-works.com

DANIEL DAVIS LINKHART — STATE OF WASHINGTON — 41390 — STRUCTURAL ENGINEER — PROFESSIONAL ENGINEER — 1/22/24

DIGITAL SEAL ON PDF FILE

City of Puyallup
Development & Permitting Services
ISSUED PERMIT

Building	Planning
Engineering	Public Works
Fire	Traffic

100% CD SET

REV	ISSUED FOR	Date

PLAN NORTH

SCALE: As indicated

PSE - OPERATIONAL TRAINING CENTER

STEEL DETAILS

PROJECT#.	21239
DRAWN BY:	GK
CHECKED BY:	DL
DATE ISSUED:	1/26/24

S4.05

PRINT. 1/22/2024 9:52:18 AM

© 2024

21239

Autodesk Docs://7222 - 5111 - PSE North Bend Precon Design/23073IKW21239 Zervas PSE OTC - Struct - r22.rvt

PRCNC20240216

1/22/2024 9:52:19 AM

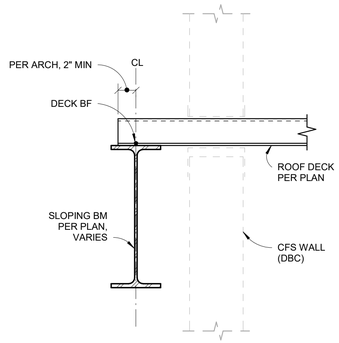

6 TYP INTERIOR LOW ROOF EDGE AT PERPENDICULAR DECK
1 1/2" = 1'-0"

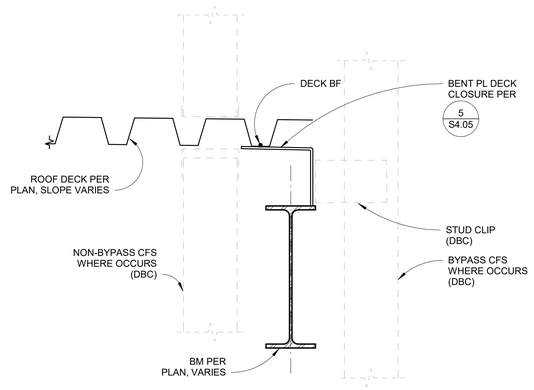

5 TYP ROOF EDGE AT PARALLEL DECK
1 1/2" = 1'-0"

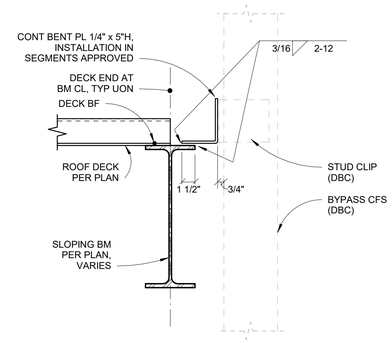

3 TYP EXTERIOR ROOF EDGE AT PERPENDICULAR DECK
1 1/2" = 1'-0"

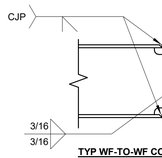

TYP WF-TO-WF CONNECTION

SCHEDULE

FRAME	WF	LEGS
DOAS	W8x18	4" SCH 40
OTHER	W8x10	3" SCH 40

NOTES
1. FRAME SHALL BE HDG AFTER FABRICATION, REMOVE HDG AT FIELD WELD REGION ACCORDING TO S0.01.
2. DIMENSIONS OF FRAME SHALL BE COORDINATED w/ THE RTU SUBMITTALS AND CONFIRMED BY GC PRIOR TO FABRICATION.
3. INSTALL (4) DECK FASTENERS EACH SIDE OF EACH PIPE STANCHION AT NEAREST BOTTOM RIB.
4. WF FRAME SHALL BE INSTALLED FLAT & LEVEL, ADJUST PIPE LEG LENGTHS AS REQ'D.

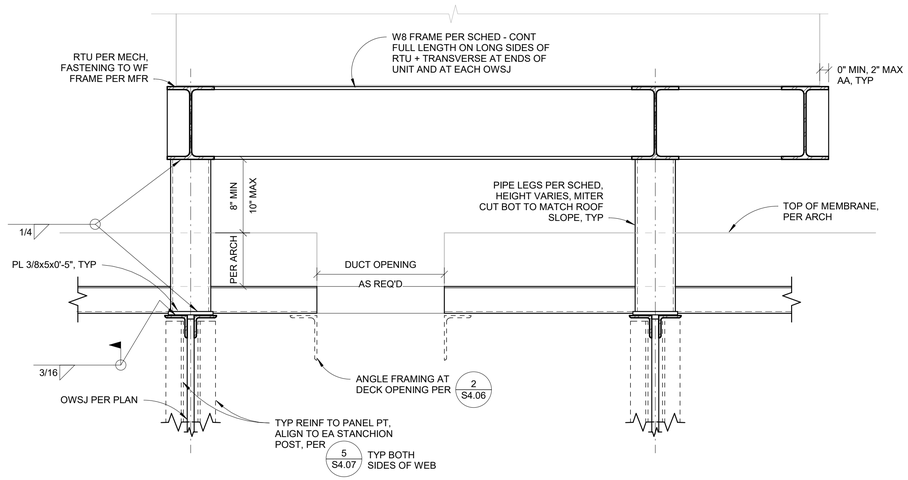

4 TYP RTU SUPPORT OVER 3" N-DECK
1 1/2" = 1'-0"

Welding to be done by an individual or fabricator who is WABO certified or approved by the Building Official to perform the work. All welds must be inspected and approved by a WABO certified special inspector.

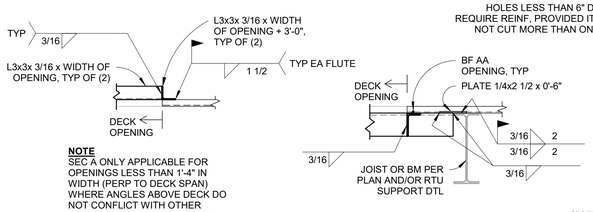

NOTE
SEC A ONLY APPLICABLE FOR OPENINGS LESS THAN 1'-4" IN WIDTH (PERP TO DECK SPAN) WHERE ANGLES ABOVE DECK DO NOT CONFLICT WITH OTHER WORK. OTHERWISE USE SEC B TYPE FRAMING.

SECTION A

SECTION B

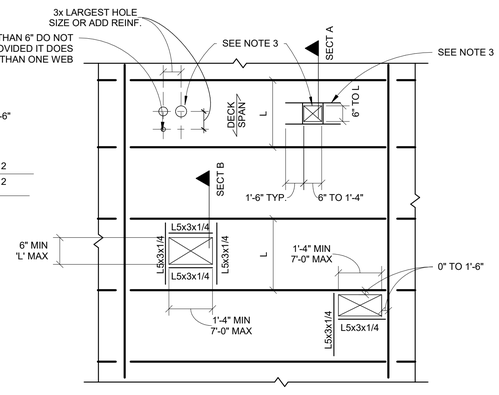

PLAN

NOTES:
1. INSTALL REINFORCING BEFORE CUTTING HOLES.
2. CONTRACTOR SHALL COORDINATE OPENING SIZES AND LOCATIONS WITH MECHANICAL AND ELECTRICAL DRAWINGS AND SUBCONTRACTORS. NOT ALL OPENINGS ARE INDICATED ON THE STRUCTURAL PLANS, BUT SHALL BE CLEARLY INDICATED ON THE SUBMITTED STEEL DECK AND STEEL FRAMING SHOP DRAWINGS.
3. OPENINGS LESS THAN 1'-4" IN WIDTH REQUIRE A CLEAR SPACING FROM ADJACENT OPENINGS OF THREE TIMES MAXIMUM OPENING DIMENSION. IF REQ'D LAYOUT CANNOT CONFORM TO THE REQUIREMENTS, REINFORCE GROUP AS IF ONE COMBINED PENETRATION.
4. THIS DETAIL APPLIES TO DECK OPENINGS ONLY; SEE DTL ELSEWHERE FOR SECONDARY FRAMING BENEATH MECHANICAL UNITS, WHICH ARE REQUIRED IN ADDITION TO THIS DETAIL.

OPENINGS 7'-0" AND LESS

2 TYP ROOF DECK OPENINGS
3/4" = 1'-0"

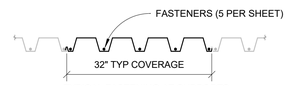

TYPICAL FASTENING AT SUPPORTS

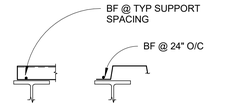

TYPICAL FASTENING AT ROOF DECK EDGES

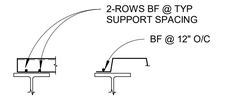

TYPICAL FASTENING AT BRBF BEAMS, DRAG STRUTS (DS) AND COLLECTORS

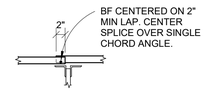

TYP SHEET SPLICE OVER SUPPORT



TYPICAL FASTENING AT SIDELAPS

NOTE
DECK WELDS ARE NOT PERMITTED ON THIS PROJECT DUE TO AESTHETIC CONCERNS.

NOTES
1. SUPPORT FASTENERS TO STRUCTURAL STEEL WITH THICKNESS BETWEEN 1/8" AND 1/4" SHALL BE HILTI X-HSN 24 OR APPROVED EQ.
2. SUPPORT FASTENERS TO STRUCTURAL STEEL WITH THICKNESS BETWEEN 1/4" AND 3/8" SHALL BE HILTI X-HSN 24 OR X-ENP 19 OR APPROVED EQ.
3. SUPPORT FASTENERS TO STRUCTURAL STEEL WITH GREATER THAN 3/8" THICKNESS SHALL BE HILTI X-ENP 19 OR APPROVED EQ.
4. SIDELAP FASTENING SHALL BE VERCO VSC2 (SIDELAP CLINCHING SYSTEM) OR APPROVED EQ.
5. DECK SIDELAPS SHALL BE STANDARD INTERLOCKING TYPE. NESTED OR OVERLAPPING SIDELAPS ARE NOT PERMITTED EXCEPT WHERE SPECIFICALLY INDICATED.
6. ROOF DECK "BOUNDARY FASTENING" (BF) INDICATED IN DETAILS ELSEWHERE SHALL EQUAL EDGE & COLLECTOR SPACING SHOWN ABOVE.
7. SUBMIT PLAN FOR REVIEW SHOWING PROPOSED FASTENERS AND LAYOUT FOR SUPPORTS, SIDELAPS, EDGES, MARGINS & COLLECTORS. PROPOSED DEVIATIONS FROM THE FASTENER TYPES AND/OR SPACINGS SHOWN ABOVE ARE SUBJECT TO EOR APPROVAL AND SHALL PROVIDE EQUIVALENT OR BETTER PERFORMANCE THAN THE TYPE SHOWN ABOVE.
8. SUPPORT ALL DECK EDGES AT OPENINGS AND ENDS WITH MINIMUM L2.5x2.5x3/16 WHERE NO OTHER SUPPORT IS SHOWN.

1 TYP 3-IN ROOF DECK FASTENING
3/4" = 1'-0"

ZERVAS
ARCHITECTURE | INTERIOR DESIGN
zervasgroup.com
209 Prospect Street
Bellingham, WA 98225
360.734.4744

KINGWORKS STRUCTURAL ENGINEERS
600 Dupont St, Suite B
Bellingham, WA 98225
360.714.8260
www.king-works.com



DIGITAL SEAL ON PDF FILE

City of Puyallup
Development & Permitting Services
ISSUED PERMIT

Building	Planning
Engineering	Public Works
Fire	Traffic

100% CD SET

REV	ISSUED FOR	Date

PLAN NORTH

SCALE:
As indicated

PSE - OPERATIONAL TRAINING CENTER

ROOF DETAILS

PROJECT#:	21239
DRAWN BY:	GK
CHECKED BY:	DL
DATE ISSUED:	1/26/24

S4.06

PRINT: 1/22/2024 9:52:19 AM

© 2024

21239

Autodesk Docs://7222 - 5111 - PSE North Bend Precon Design/230731KW21239 Zervas PSE OTC - Struct - r22.rvt

1/22/2024 9:52:21 AM

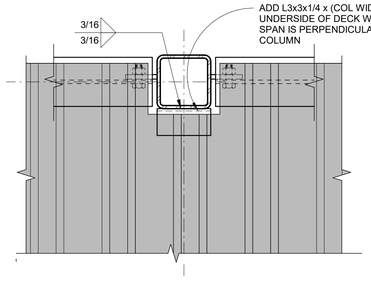

10 TYP DECK SUPPORT AT NOTCH CONDITIONS
1 1/2" = 1'-0"

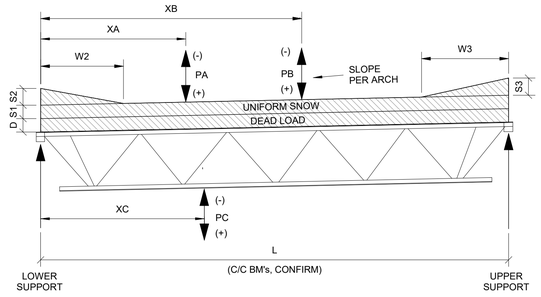

9 TYP OWSJ LOAD DIAGRAM
1/4" = 1'-0"

			POINT LOADS												
			DISTRIBUTED LOADS						PA			PB			PC	
NAME	TYPE	L	D (PLF)	S1 (PLF)	S2 (PLF)	W2	S3 (PLF)	W3	1.0D	1.0(W or E)	XA	1.0D	1.0(W or E)	XB	1.0D	XC
J1	36 LH	54'-11"	205	200	420	11'-0"	-	-	-	-	-	-	-	-	-	-
J2	28 LH	38'-11 1/2"	205	200	150	7'-0"	150	7'-0"	-	-	-	-	-	-	-	-
J2B	28 LH	38'-11 1/2"	205	200	150	7'-0"	150	7'-0"	1.0k	±1.6k	17'-7"	1.0k	±1.6k	21'-11"	0.7k	19'-3"
J2C	28 LH	38'-11 1/2"	205	200	150	7'-0"	150	7'-0"	0.7k	±3.7k	9'-11"	0.7k	±3.7k	11'-10"	-	-
J3	28 LH	40'-0 3/8"	205	200	-	-	500	12'-0"	-	-	-	-	-	-	-	-
J4	28 LH	38'-0"	205	200	420	11'-0"	-	-	-	-	-	-	-	-	-	-
J4B	28 LH	38'-0"	205	200	420	11'-0"	-	-	0.7k	±3.7k	12'-2"	0.7k	±3.7k	14'-3"	-	-
									0.6k	±3.7k	18'-3"	0.6k	±3.7k	20'-4"	-	-
J5	36 LH	47'-3"	205	200	-	-	600	14'-0"	-	-	-	-	-	-	-	-
J5B	36 LH	47'-3"	177	289	-	-	400	14'-0"	-	-	-	-	-	-	-	-
J6	36 LH	36'-5"	184	289	-	-	147	15'-0"	1.0k	±1.4k	9'-11"	1.0k	±1.4k	17'-10"	-	-
J6B	36 LH	36'-5"	205	200	-	-	600	15'-0"	3.1k	-6.1k/+3.0k	9'-11"	3.1k	-6.1k/+3.0k	17'-10"	-	-
J6C	36 LH	36'-5"	184	180	-	-	540	15'-0"	1.0k	±1.4k	9'-11"	1.0k	±1.4k	17'-10"	-	-
J6D	36 LH	36'-5"	159	177	-	-	326	15'-0"	-	-	-	-	-	-	-	-
J7	40 LH	56'-10 1/2"	205	200	300	13'-0"	350	8'-0"	-	-	-	-	-	-	-	-
J7B	40 LH	56'-10 1/2"	205	200	300	13'-0"	350	8'-0"	0.3k	±1.3k	44'-5"	0.3k	±1.3k	46'-2"	-	-
J7C	40 LH	56'-5 1/2"	205	200	300	15'-0"	-	-	-	-	-	-	-	-	-	-
J8	32 LH	46'-5 1/2"	205	200	150	7'-0"	570	14'-0"	-	-	-	-	-	-	-	-
J8B	32 LH	46'-5 1/2"	177	248	25	7'-0"	442	14'-0"	-	-	-	-	-	-	-	-
J9	28 LH	39'-3"	205	200	300	7'-0"	-	-	-	-	-	-	-	-	-	-

8 OWSJ LOAD SCHEDULE
12" = 1'-0"

NOTES
1. ALL DIMENSIONS PROVIDED ARE MEASURED FROM THE LOW END OF SLOPING JOIST (SEE DIAGRAM).
2. 'L' IS THE HORIZONTAL DIMENSION BETWEEN CENTERLINE OF SUPPORTING BEAMS AND COLUMNS, GC TO CONFIRM. END-TO-END LENGTH AND CLEAR LENGTH SHALL BE DETERMINED BY OWSJ DESIGNER AND COORDINATED WITH THE FINAL STRUCTURAL STEEL SHOP DRAWINGS.
3. 'XA' AND 'XB' DIMENSIONS PROVIDED ARE APPROXIMATE. GC TO COORDINATE/CONFIRM LOCATIONS OF RTUs AND RESPECTIVE SUPPORT FRAMING w/ KW AND OWSJ DESIGNER.
4. '+/-' WIND AND SEISMIC LOADS SHALL IN OCCUR SIMULTANEOUSLY IN OPPOSITE DIRECTIONS (DOWNWARD 'PA' CONCURRENT WITH UPWARD 'PB' AND VICE VERSA). ADDITIONALLY, LOADS SHALL BE APPLIED SIMULTANEOUSLY IN SAME DIRECTION, BUT SHALL BE MULTIPLIED BY 0.40 FOR THIS CONDITION.
5. UNFACTORED LOADS ARE PROVIDED, LOAD COMBINATIONS SHALL BE PERFORMED BY JOIST DESIGNER IN ACCORDANCE WITH ASCE 7-16.
6. JOIST 'J4B' HAS TWO PAIRS OF POINT LOADS (PER SCHEDULE) OCCURRING SIMULTANEOUSLY, EACH PAIR ACTING AS DESCRIBED ABOVE (OPPOSITE LOAD DIRECTIONS).
7. JOISTS SUPPORTING MECHANICAL SCREEN POSTS - SEE DETAIL ELSEWHERE FOR LOADS.
8. AXIAL DRAG/COLLECTOR LOADS ARE NOT SHOWN ON SCHEDULE, SEE PLAN FOR LOAD MAGNITUDES AND DETAILS FOR ECCENTRICITIES. AXIAL LOADS SHOWN ON DRAWINGS ARE 1.0E (LRFD).
9. SEE COMPONENTS & CLADDING WIND UPLIFT DIAGRAM ELSEWHERE FOR NET UPLIFT PRESSURES.

ZERVAS
ARCHITECTURE | INTERIOR DESIGN
zervasgroup.com
209 Prospect Street
Bellingham, WA 98225
360.734.4744

KINGWORKS STRUCTURAL ENGINEERS
600 Dupont St, Suite B
Bellingham, WA 98225
360.714.8260
www.king-works.com



DIGITAL SEAL ON PDF FILE

City of Puyallup
Development & Permitting Services
ISSUED PERMIT

Building	Planning
Engineering	Public Works
Fire	Traffic

NOTES
1. JOISTS SHALL BE FABRICATED TO ALLOW FOR FIELD BOLTING TO THE SUPPORTING STRUCTURE IN ACCORDANCE WITH OSHA/WISHA REQUIREMENTS.
2. SNUG-TIGHTENED BOLTS SHALL REMAIN IN THE BEARING SEAT SLOTS AFTER FINAL CONNECTION IS MADE VIA WELDING.
3. IF BOLTS ARE NOT USED, OR IF THE BOLTS ARE REMOVED AFTER ERECTION, JOIST SEATS MUST BE WELDED ALONG THE INSIDE EDGE OF SEAT SLOTS IN ADDITION TO TYP EDGE WELDS.
4. WELDS SHALL BE DOWNSIZED TO 3/16"x2" AT K-SERIES JOISTS.

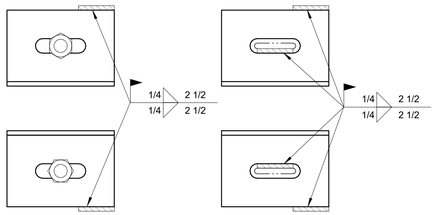

7 TYP OWSJ WELDS AT BEARING SEATS
3" = 1'-0"

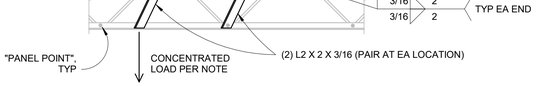

NOTES
1. WHERE CONCENTRATED LOADS ARE SUPPORTED BY OWSJ's, ALIGN LOADS DIRECTLY w/ PANEL POINTS WHERE FEASIBLE.
2. WHERE ALIGNMENT TO PANEL POINTS IS NOT FEASIBLE AND LOAD EXCEEDS CRITERIA BELOW, WELD ANGLE REINFORCING MEMBERS, ONE EACH SIDE, FROM POINT OF CONCENTRATED LOAD TO NEAREST PANEL POINT ON OPPOSITE CHORD OF THE JOIST. REINFORCING ANGLES SHALL BE SUPPLIED BY GENERAL CONTRACTOR, AND INSTALLED BY STEEL ERECTOR.
3. ANGLE REINFORCING MEMBERS SHALL BE REQUIRED WHEN THE CONCENTRATED LOAD EXCEEDS THE GREATER OF:
   A. 100 LBS
   B. SPECIFIED ADLOAD (IF SHOWN ELSEWHERE)

5 TYP OWSJ REINFORCEMENT AT CONCENTRATED LOADS
3/4" = 1'-0"

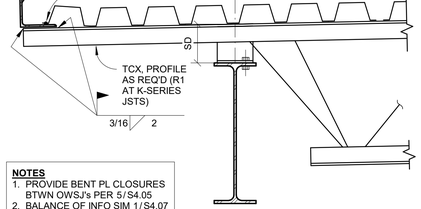

NOTES
1. PROVIDE BENT PL CLOSURES BTWN OWSJ's PER 5/S4.05
2. BALANCE OF INFO SIM 1/S4.07
3. 'SD' SEAT DEPTH = 6 1/2" AT LH JOISTS, 3 1/2" AT K JOISTS

6 TYP OWSJ w/ TOP CHORD EXTENSION
1" = 1'-0"

Welding to be done by an individual or fabricator who is WABO certified or approved by the Building Official to perform the work. All welds must be inspected and approved by a WABO certified special inspector.

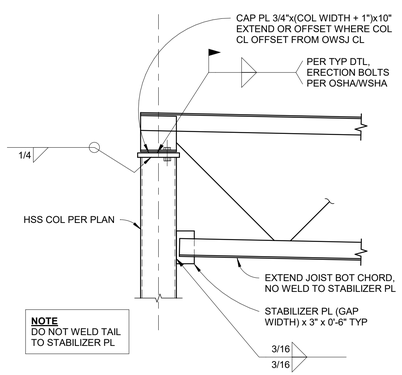

3 TYP OWSJ BEARING AT TOP-OF-COLUMN
1" = 1'-0"

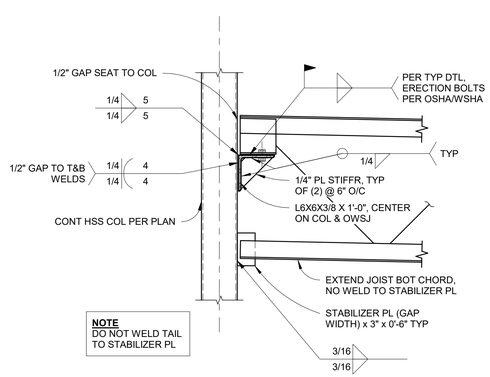

2 TYP OWSJ BEARING AT CONT COL
1" = 1'-0"

NOTES
1. BALANCE OF INFO SIM 1/S4.07
2. SIM AT RIDGE CONDITION WHERE JOIST SLOPES DOWN EA SIDE OF BEAM.
3. BENT PL CLOSURES NOT REQ'D BETWEEN OWSJ's UNLESS OTHERWISE NOTED.

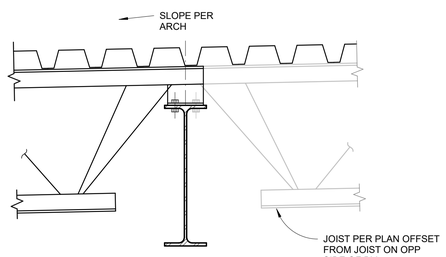

4 TYP OWSJ BRG EA SIDE OF BM
1" = 1'-0"

NOTES
1. PROVIDE BENT PL CLOSURES BTWN OWSJ's PER 5/S4.05
2. UPPER END OF JOIST SHOWN, SIM AT LOWER END OF JOIST.
3. 'SD' SEAT DEPTH = 6 1/2" AT LH JOISTS, 3 1/2" AT K JOISTS

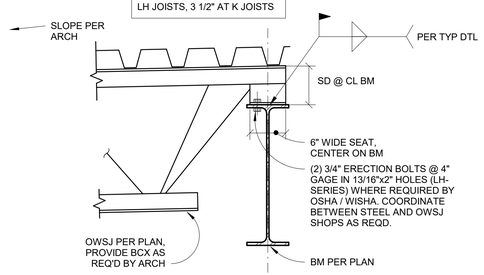

1 TYP OWSJ BRG AT EDGE BM
1" = 1'-0"

100% CD SET

REV	ISSUED FOR	Date

PLAN NORTH

SCALE:
As indicated

PSE - OPERATIONAL TRAINING CENTER

ROOF DETAILS

PROJECT#.	21239
DRAWN BY:	GK
CHECKED BY:	DL
DATE ISSUED:	1/26/24

S4.07

PRINT. 1/22/2024 9:52:21 AM
© 2024

21239
Autodesk Docs://7222 - 5111 - PSE North Bend Precon Design/230731KW21239 Zervas PSE OTC - Struct - r22.rvt

PRCNC20240216

1/22/2024 9:52:22 AM

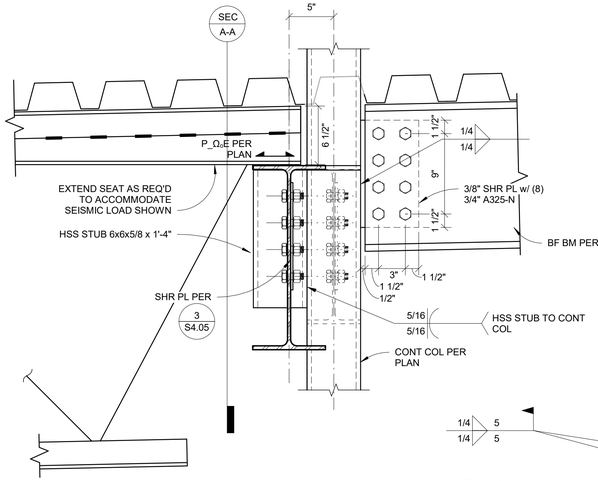

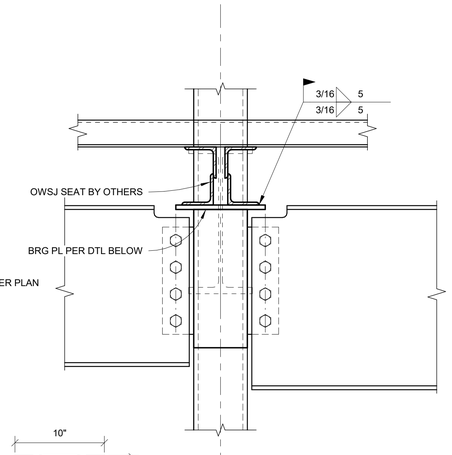

SEC A-A

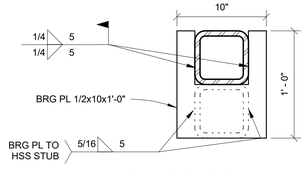

BRG PLATE CONNECTIONS

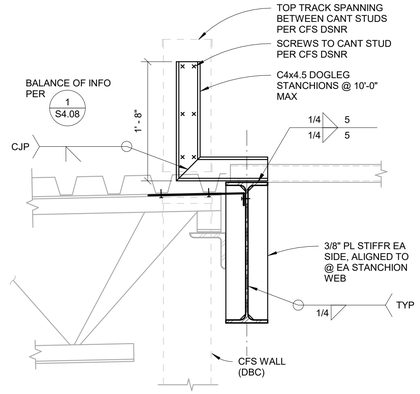

6 GRID 2 TYP PARAPET STANCHIONS
1" = 1'-0"

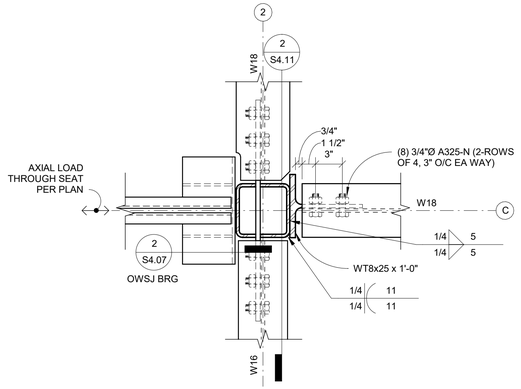

5 ROOF FRAMING AT GRID C & 2 COLUMN
1 1/2" = 1'-0"

ZERVAS
ARCHITECTURE | INTERIOR DESIGN
zervasgroup.com
209 Prospect Street
Bellingham, WA 98225
360.734.4744

KINGWORKS STRUCTURAL ENGINEERS
600 Dupont St, Suite B
Bellingham, WA 98225
360.714.8260
www.king-works.com

DANIEL DAVIS LINKHART
STATE OF WASHINGTON
41390
STRUCTURAL ENGINEER
PROFESSIONAL ENGINEER
1/22/24
DIGITAL SEAL ON PDF FILE

City of Puyallup
Development & Permitting Services
ISSUED PERMIT
Building | Planning
Engineering | Public Works
Fire | Traffic

Welding to be done by an individual or fabricator who is WABO certified or approved by the Building Official to perform the work. All welds must be inspected and approved by a WABO certified special inspector.

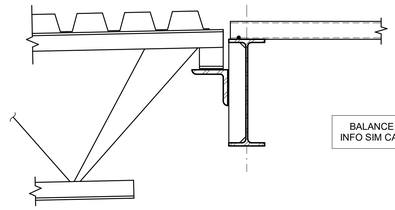

BALANCE OF INFO SIM CASE A

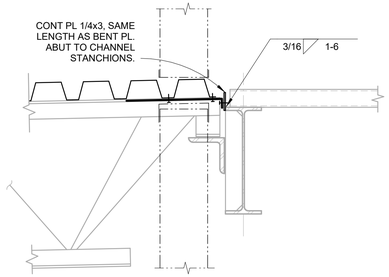

CASE C AT JOIST BEARING

CASE C BETWEEN JOIST BEARINGS

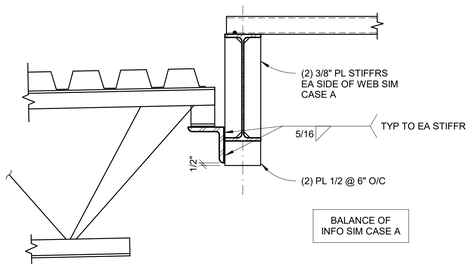

BALANCE OF INFO SIM CASE A

CASE B AT JOIST BEARING

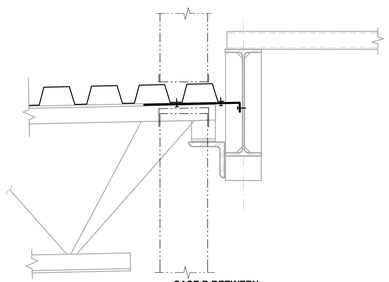

CASE B BETWEEN JOIST BEARINGS

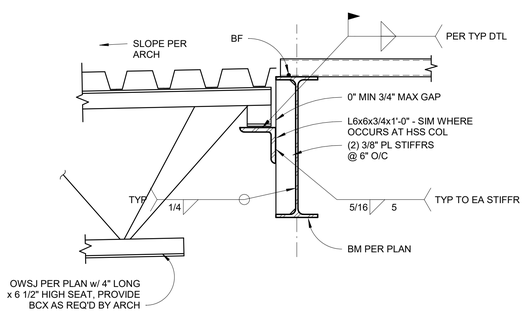

CASE A AT JOIST BEARING

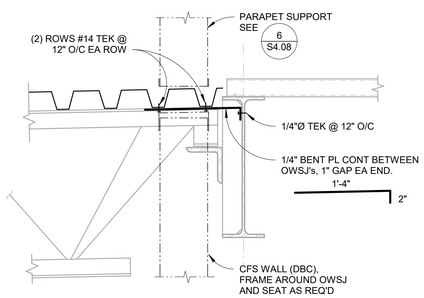

CASE A BETWEEN JOIST BEARINGS

7 CONN AT GRID C.1 & 4.1
1 1/2" = 1'-0"

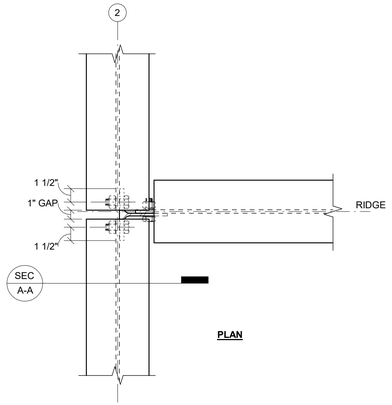

PLAN

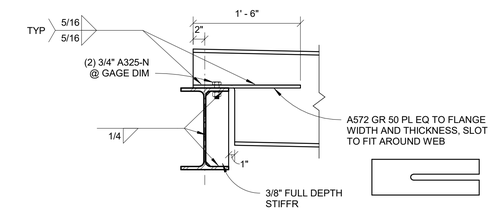

4 OFFSET BM-TO-BM CONNECTION
1" = 1'-0"

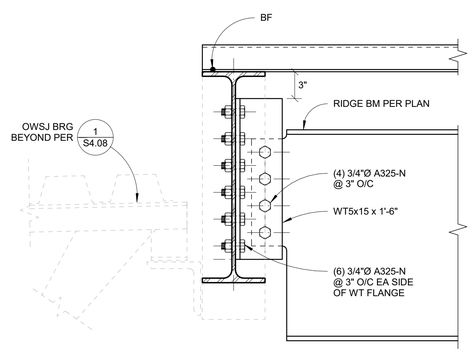

SECTION A-A

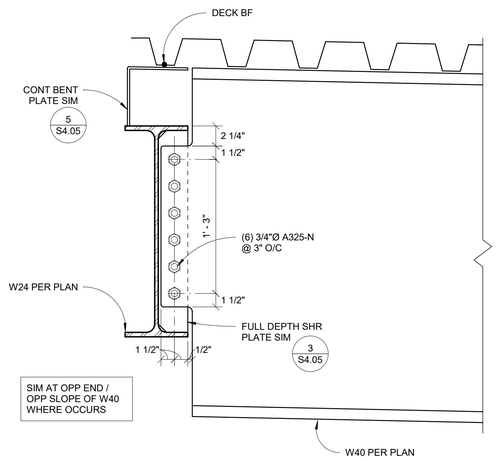

3 RIDGE BEAM AT GRID 2
1 1/2" = 1'-0"

2 W40 BM AT W24
1 1/2" = 1'-0"

1 GRID 2 ROOF SECTIONS
1" = 1'-0"

100% CD SET

REV	ISSUED FOR	Date

PLAN NORTH

SCALE:
As indicated

PSE - OPERATIONAL TRAINING CENTER

ROOF DETAILS

PROJECT#.	21239
DRAWN BY:	GK
CHECKED BY:	DL
DATE ISSUED:	1/26/24

S4.08

PRINT: 1/22/2024 9:52:22 AM

© 2024

21239

Autodesk Docs://7222 - 5111 - PSE North Bend Precon Design/23073IKW21239 Zervas PSE OTC - Struct - r22.rvt

1/22/2024 9:52:23 AM

PRCNC20240216

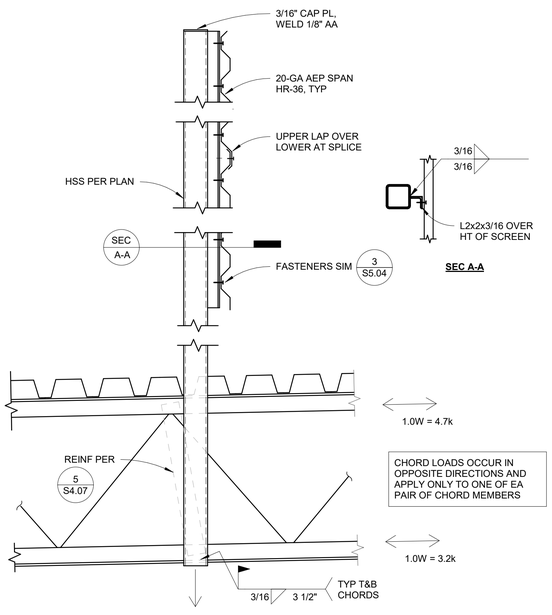

6 SECTION AT MECH UNIT SCREEN - GRID 4 - UPPER ROOF
1" = 1'-0"

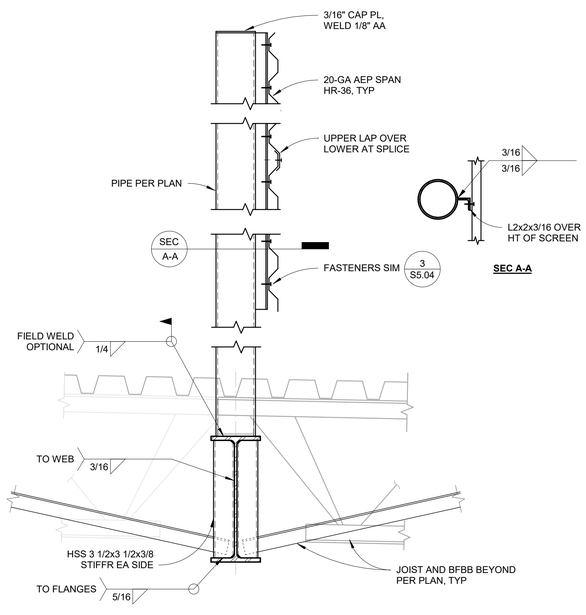

5 SECTION AT MECH UNIT SCREEN - GRID 4.2 - LOW ROOF
1" = 1'-0"

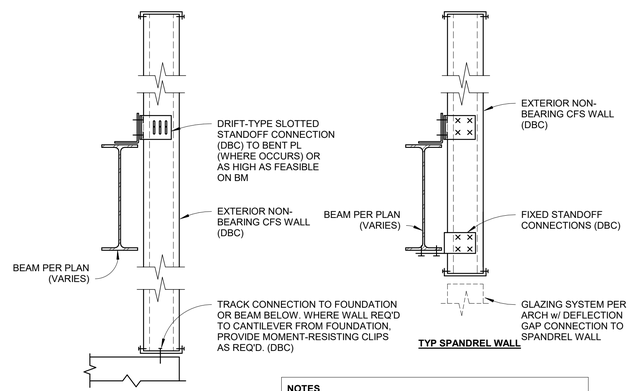

NOTES
1. SEE SPEC AND STRUCTURAL NOTES FOR WALL DESIGN CRITERIA.
2. COLD-FORMED STEEL WALLS WITH THEIR WEIGHT SUPPORTED BY FIXED CONNECTIONS TO BEAMS OR DECKS (SUCH AS AT SPANDREL WALLS) SHALL HAVE VERTICAL ISOLATION JOINTS EACH END PER ARCH, AS REQUIRED TO PERMIT ANTICIPATED MAXIMUM BEAM DEFLECTIONS WITHOUT RESISTANCE FROM OR DAMAGE TO ADJACENT FOUNDATION-SUPPORTED WALLS OR FINISHES.

4 TYP BYPASS CFS WALL
1" = 1'-0"

ZERVAS
ARCHITECTURE | INTERIOR DESIGN
zervasgroup.com
209 Prospect Street
Bellingham, WA 98225
360.734.4744

KINGWORKS STRUCTURAL ENGINEERS
600 Dupont St, Suite B
Bellingham, WA 98225
360.714.8260
www.king-works.com

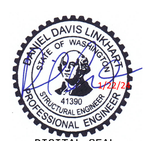

DIGITAL SEAL

City of Puyallup
Development & Permitting Services
ISSUED PERMIT
Building | Planning
Engineering | Public Works
Fire | Traffic

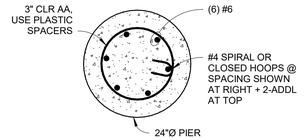

SECTION A-A
(NTS)

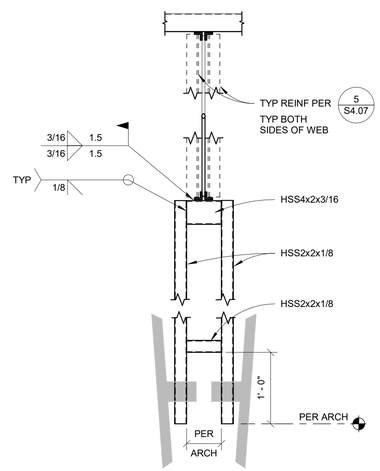

3 AV MASTS AT APPLIANCE LAB
1" = 1'-0"

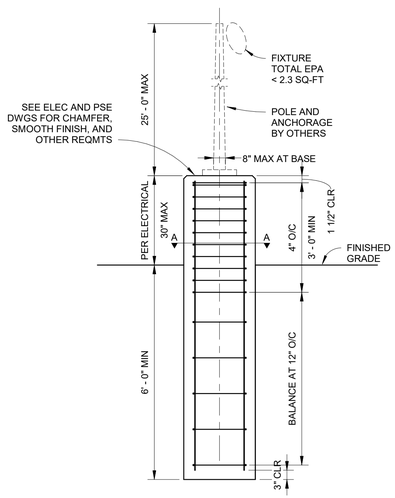

2 TYP LIGHT AND SECURITY CAMERA POLE FOUNDATION
1/2" = 1'-0"

Welding to be done by an individual or fabricator who is WABO certified or approved by the Building Official to perform the work. All welds must be inspected and approved by a WABO certified special inspector.

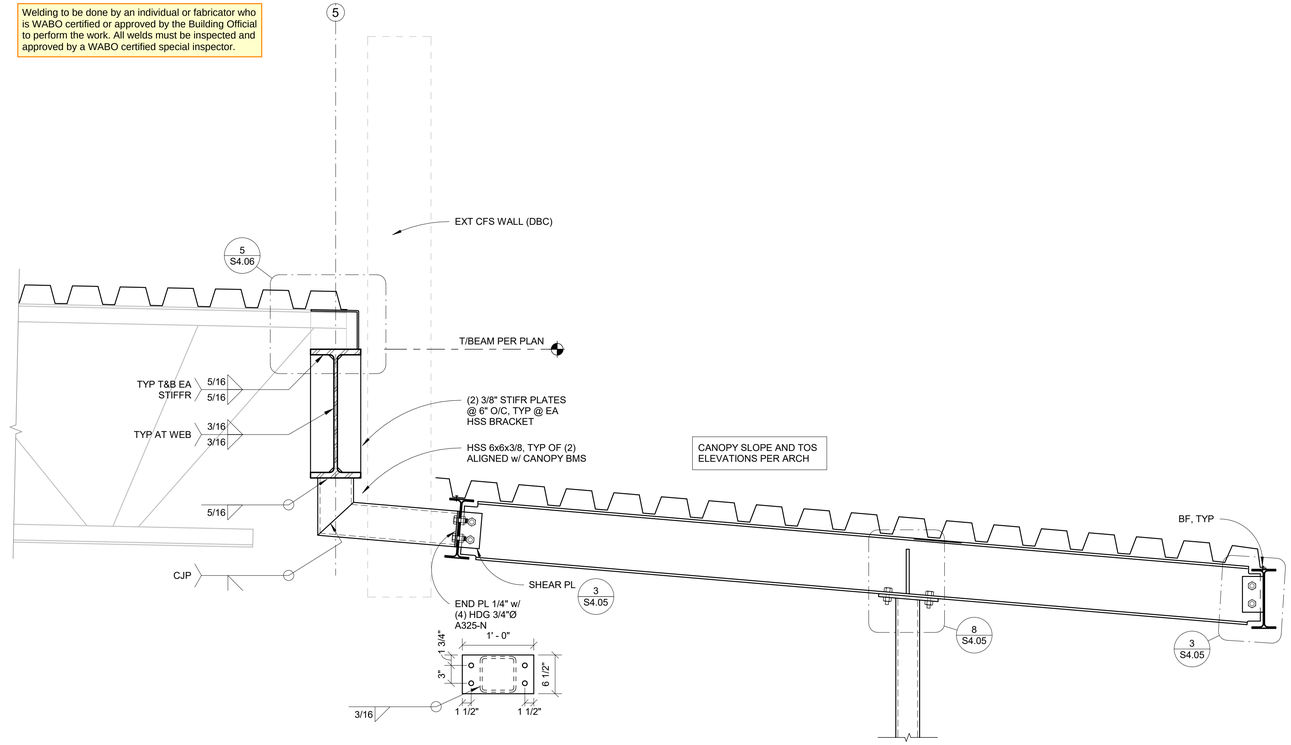

1 ROOF SECTION AT ENTRY CANOPY
1" = 1'-0"

100% CD SET

REV	ISSUED FOR	Date

PLAN NORTH

SCALE:
As indicated

PSE - OPERATIONAL TRAINING CENTER

MISC DETAILS

PROJECT#.	21239
DRAWN BY:	GK
CHECKED BY:	DL
DATE ISSUED:	1/26/24

S4.09

PRINT: 1/22/2024 9:52:23 AM

© 2024

Autodesk Docs://7222 - 5111 - PSE North Bend Precon Design/23073KW21239 Zervas PSE OTC - Struct - r22.rvt

21239

1/22/2024 9:52:24 AM

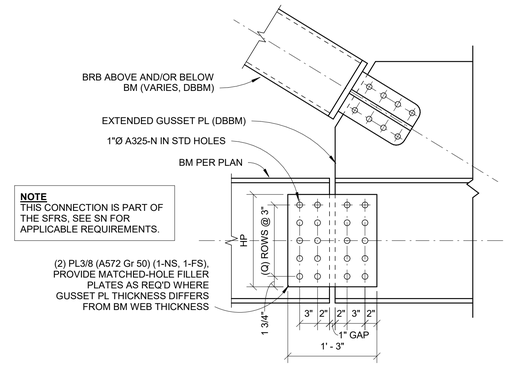

BRBF BM SPLICE SCHEDULE

BF #	ROOF LEVEL	NOM BM DEPTH	SIDE PLATE THICK	# HORIZ BOLT ROWS	BOLTS PER ROW (EA SIDE OF SPLICE)	BOLT TYPE
BF-1	LOWER	12	1/4	3	2	3/4" A325-N
	UPPER	12	1/4	3	2	3/4" A325-N
BF-2	LOWER	12	1/4	3	2	3/4" A325-N
BF-3	UPPER	16	1/4	4	2	3/4" A325-N
BF-4	UPPER	16	1/4	4	2	3/4" A325-N
BF-5	LOWER	16	1/4	4	2	3/4" A325-N
BF-6	UPPER	16	1/4	4	2	3/4" A325-N
BF-7	UPPER	21	1/4	6	2	3/4" A325-N
BF-8	LOWER	12	1/4	3	2	3/4" A325-N
	UPPER	16	3/8	4	2	1" A325-N
BF-10	LOWER	14	1/4	3	2	3/4" A325-N
BF-11	LOWER	24	1/4	6	2	3/4" A325-N
	UPPER	12	1/4	3	2	3/4" A325-N
BF-12	LOWER	12	1/4	3	2	3/4" A325-N
	UPPER	16	3/8	4	2	1" A325-N
BF-13	UPPER	12	1/4	3	2	3/4" A325-N
BF-14	LOWER	12	1/4	3	2	3/4" A325-N
	UPPER	16	1/4	3	2	3/4" A325-N

7 TYP BRBF BM SPLICE AT GUSSET PL
1" = 1'-0"

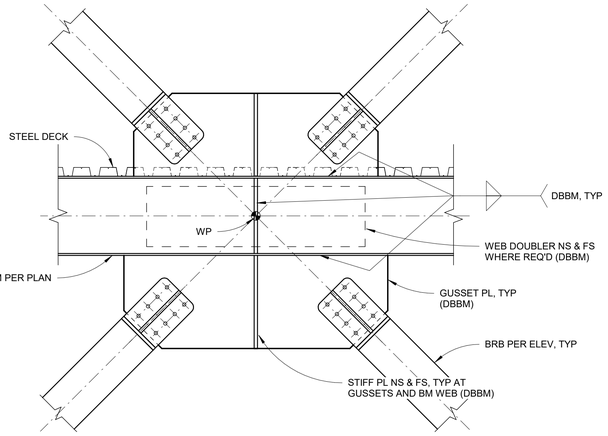

NOTES
1. WP TO END OF BRB & BRB LENGTH TO BE PROVIDED BY THE BRB MFR.
2. ALL PLATES A572 Gr 50, UON.
3. WHERE PERPENDICULAR BEAM ALIGNS w/ CENTER STIFF PL, OFFSET PL SLIGHTLY TO ALLOW SIM TYP SHEAR CONN FROM BM TO STIFF PL.
4. SIM AT ROOF CONDITION, NO BRBs OR PLATES ABOVE BEAM.
5. THIS CONNECTION IS PART OF THE SFRS, SEE SN FOR APPLICABLE REQUIREMENTS.

5 TYP CHEVRON BRB AT MID-BEAM CONDITION
3/4" = 1'-0"

ZERVAS
ARCHITECTURE | INTERIOR DESIGN
zervasgroup.com
209 Prospect Street
Bellingham, WA 98225
360.734.4744

KINGWORKS STRUCTURAL ENGINEERS
600 Dupont St, Suite B
Bellingham, WA 98225
360.714.8260
www.king-works.com



DIGITAL SEAL ON PDF FILE

City of Puyallup
Development & Permitting Services
ISSUED PERMIT

Building	Planning
Engineering	Public Works
Fire	Traffic

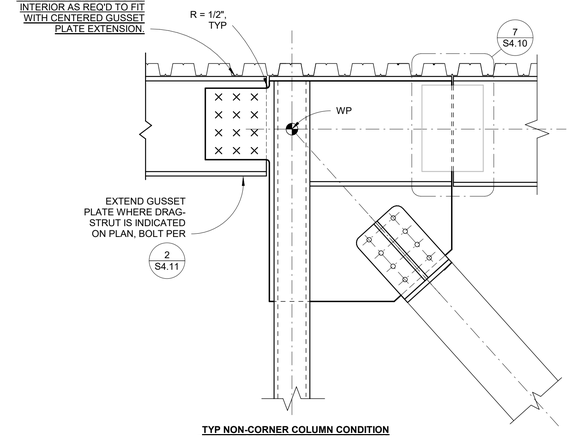

TYP NON-CORNER COLUMN CONDITION
BALANCE OF INFO SIM DTL AT RIGHT, UON

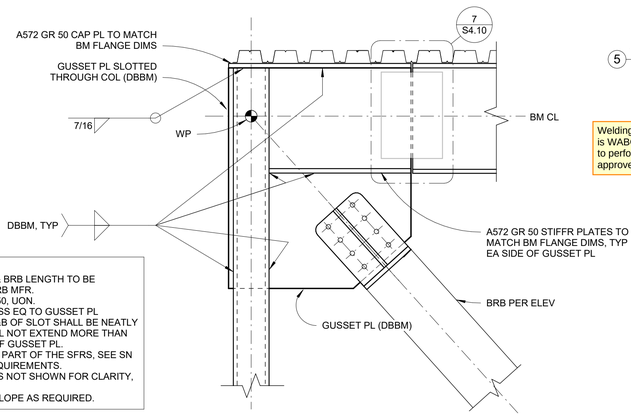

NOTES
1. WP TO END OF BRB & BRB LENGTH TO BE PROVIDED BY THE BRB MFR.
2. ALL PLATES A572 Gr 50, UON.
3. PROVIDE SLOTS IN HSS EQ TO GUSSET PL THICKNESS +1/16". T&B OF SLOT SHALL BE NEATLY RADIUSED AND SHALL NOT EXTEND MORE THAN 1" BEYOND EA END OF GUSSET PL.
4. THIS CONNECTION IS PART OF THE SFRS, SEE SN FOR APPLICABLE REQUIREMENTS.
5. PERPENDICULAR BMS NOT SHOWN FOR CLARITY, TYP.
6. ADJUST FOR ROOF SLOPE AS REQUIRED.

TYP CORNER COLUMN CONDITION

Welding to be done by an individual or fabricator who is WABO certified or approved by the Building Official to perform the work. All welds must be inspected and approved by a WABO certified special inspector.

4 TYP BRB BELOW BEAM
1" = 1'-0"

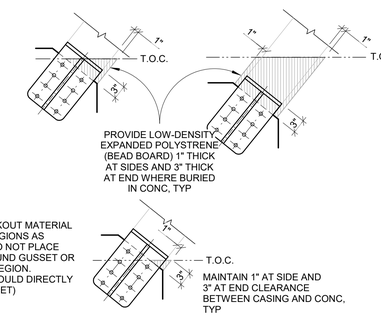

NOTE
PROVIDE BLOCKOUT MATERIAL IN HATCHED REGIONS AS SHOWN, BUT DO NOT PLACE MATERIAL AROUND GUSSET OR CONNECTION REGION. (CONCRETE SHOULD DIRECTLY CONTACT GUSSET)

2 TYP BRB CASING BURIED IN CONC
3/4" = 1'-0"

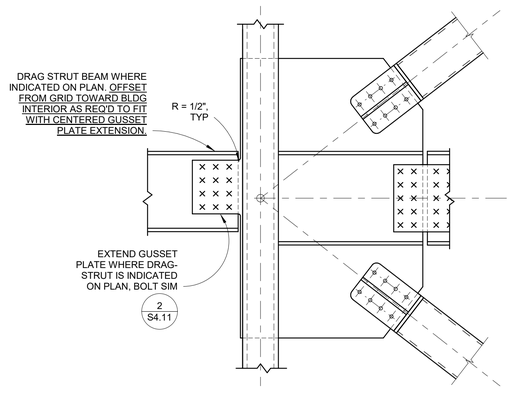

TYP CONDITION @ NON CORNER COLUMNS
(BALANCE OF INFO SIM DTL AT RIGHT)

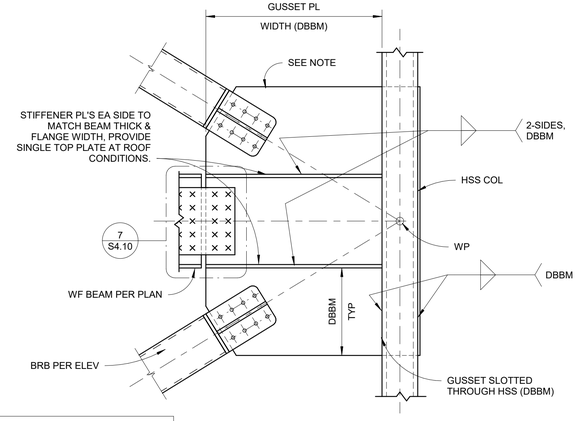

TYP CONDITION @ CORNER COLUMN

NOTES
1. GUSSET PLATES, STIFFENERS, WELDS, AND ALL OTHER BRB APPURTENANCES NOT SPECIFICALLY INDICATED SHALL BE DESIGNED BY THE BRB MFR.
2. ALL PLATES REQUIRED FOR THESE CONNECTIONS SHALL BE ASTM A572 GR. 50
3. THIS CONNECTION IS PART OF THE SFRS, SEE SN FOR APPLICABLE REQUIREMENTS.

3 TYP BRB AT ABOVE AND BELOW BEAM AT COL
3/4" = 1'-0"

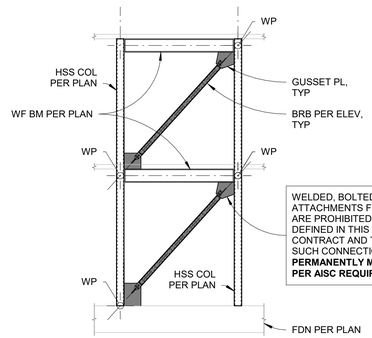

TYP BRBF (SIM AT ALT CONFIGURATIONS)

1 TYP BRBF PROTECTED ZONES
1/8" = 1'-0"

100% CD SET

REV	ISSUED FOR	Date

PLAN NORTH

SCALE:
As indicated

PSE - OPERATIONAL TRAINING CENTER

SFRS DETAILS

PROJECT#.	21239
DRAWN BY:	GK
CHECKED BY:	DL
DATE ISSUED:	1/26/24

S4.10

PRINT: 1/22/2024 9:52:24 AM

© 2024

21239

Autodesk Docs://7222 - 5111 - PSE North Bend Precon Design/23073IKW21239 Zervas PSE OTC - Struct - r22.rvt

1/22/2024 9:52:25 AM

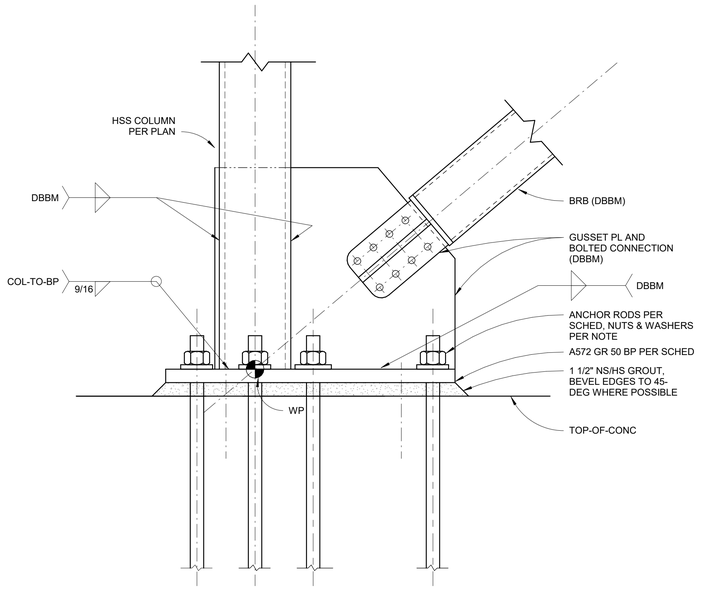

TYP ELEVATION AT BRBF BASEPLATE w/ GUSSET PL

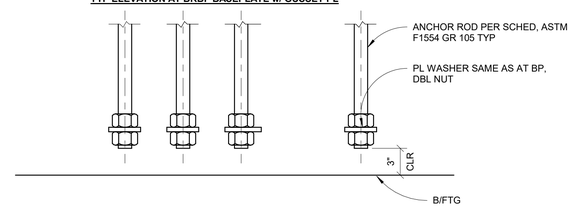

TYP ELEVATION AT ANCHOR BOT

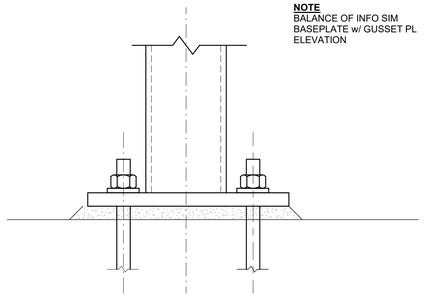

NOTE
BALANCE OF INFO SIM BASEPLATE w/ GUSSET PL ELEVATION

TYP ELEVATION AT BRBF BASEPLATE w/ NO GUSSET PL

1 TYP BRBF BASES
1 1/2" = 1'-0"

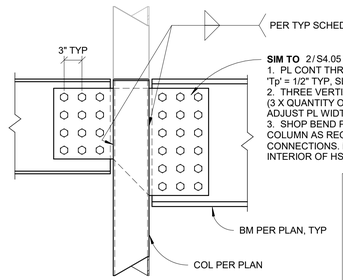

NOTES
1. THIS CONNECTION IS PART OF THE SFRS, SEE SN FOR APPLICABLE REQUIREMENTS.
2. ADJUST GEOMETRY FOR ROOF SLOPE AS REQ'D
3. WHERE BM OFFSET FROM CL OF COL IS DIFFERENT FOR THE TWO CONNECTED BMS, PROVIDE 2 BENDS IN PL (ONE AT EA COL FACE) TO ACCOMMODATE.

NOTE
THIS DETAIL SHALL APPLY WHERE ——✕ OR ——● INDICATED AT BEAM END ON PLAN, OTHERWISE USE TYP BM-COL DETAIL 2/S4.05

2 TYP DRAG STRUT WF BM AT COLUMN
1" = 1'-0"

Welding to be done by an individual or fabricator who is WABO certified or approved by the Building Official to perform the work. All welds must be inspected and approved by a WABO certified special inspector.

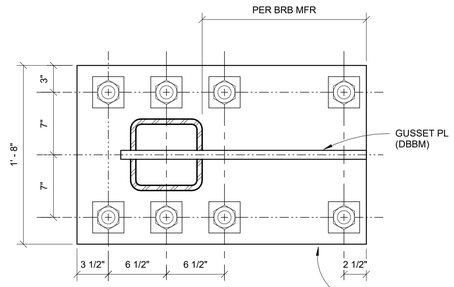

BP-G88
(TYP HSS8X8 w/ GUSSET PL, 8 ANCHORS)

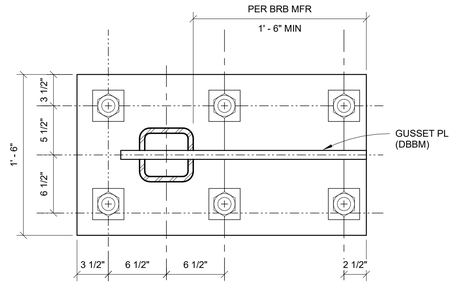

BP-G66
(TYP HSS6X6 w/ GUSSET PL, 6 ANCHORS)

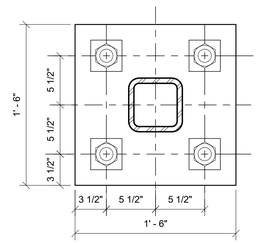

BP-X64
(TYP HSS 6X6 w/o GUSSET PL, 4 ANCHORS)

BRBF COL BASE SCHEDULE

BF #	BRACE END AT BP	COL	BP TYPE	BP MIN THICKNESS (IN)	ANCHORS (#)	ANCHOR DIA (IN)
1	YES	HSS 8X8X5/8	BP-G88	1 1/2	8	1
	NO	HSS 6X6X5/8	BP-X64	1 1/4	4	1
2	YES	HSS 6X6X5/8	BP-G66	1 1/4	6	1
	NO	HSS 6X6X5/8	BP-X64	1	4	3/4
3	YES	HSS 6X6X5/8	BP-G66	1 1/4	6	1
4	YES	HSS 6X6X5/8	BP-G66	1 1/4	6	1
5	YES	HSS 6X6X5/8	BP-G66	1	6	3/4
	NO	HSS 6X6X5/8	BP-X64	1	4	3/4
6	YES	HSS 6X6X5/8	BP-G66	1 1/4	6	1
7	YES	HSS 6X6X5/8	BP-G66	1 1/4	6	1
8	YES	HSS 6X6X5/8	BP-G66	1 1/4	6	1
	NO	HSS 6X6X5/8	BP-X64	1 1/4	4	1
9	YES	HSS 6X6X5/8	BP-G66	1	6	3/4
10	YES	HSS 6X6X5/8	BP-G66	1 1/4	6	1
	NO	HSS 6X6X5/8	BP-X64	1	4	3/4
11	YES	HSS 6X6X5/8	BP-G66	1 1/2	6	1 1/4
	NO	HSS 6X6X5/8	BP-X64	1	4	3/4
12	YES	HSS 6X6X5/8	BP-G66	1 1/2	6	1
	NO (SEE BF-11)	-	-	-	-	-
13	YES	HSS 6X6X5/8	BP-G66	1 1/4	6	1
	NO	HSS 6X6X5/8	BP-X64	1	4	3/4
14	NO	HSS 6X6X5/8	TYP	3/4	4	3/4

NOTES
1. WP TO END OF BRB & BRB LENGTH TO BE PROVIDED BY THE BRB MFR.
2. ALL PLATES A572 Gr 50, UON.
3. PROVIDE SLOTS IN HSS EQ TO GUSSET PL THICKNESS +1/16". T&B OF SLOT SHALL BE NEATLY RADIUSED AND SHALL NOT EXTEND MORE THAN 1" BEYOND EA END OF GUSSET PL.
4. ALL COMPONENTS SHOWN ON THIS DRAWING SHALL BE CONSIDERED PART OF THE SFRS.

BRBF BASEPLATE NOTES
1. TYP ANCHOR HOLES IN BP SHALL BE NO LARGER THAN PERMITTED PER AISC STEEL CONSTRUCTION MANUAL TABLE 14-2.
2. TYP ANCHOR ROD SHALL BE ASTM F1554 GR 105.
3. TYP HEAVY HEX NUT SHALL BE WRENCH-TIGHTENED PER AISC.
4. TYP WASHER SHALL BE PL 1/2x3 1/2x3 1/2 GR 50 w/ CENTER HOLE EQ TO ROD DIA PLUS 1/16".
5. ALL WELDS SHOWN ARE 'DEMAND-CRITICAL' AND SHALL SATISFY THE REQUIREMENTS OF AISC 341-16 SEC A3.4b AND I2.3.

ZERVAS
ARCHITECTURE | INTERIOR DESIGN
zervasgroup.com
209 Prospect Street
Bellingham, WA 98225
360.734.4744

KINGWORKS STRUCTURAL ENGINEERS
600 Dupont St, Suite B
Bellingham, WA 98225
360.714.8260
www.king-works.com

DANIEL DAVIS LINKHART — STATE OF WASHINGTON — 41390 — STRUCTURAL ENGINEER — PROFESSIONAL ENGINEER — 1/22/24
DIGITAL SEAL ON PDF FILE

City of Puyallup
Development & Permitting Services
ISSUED PERMIT
Building | Planning | Engineering | Public Works | Fire | Traffic

100% CD SET

REV	ISSUED FOR	Date

PLAN NORTH

SCALE:
As indicated

PSE - OPERATIONAL TRAINING CENTER

SFRS DETAILS

PROJECT#:	21239
DRAWN BY:	GK
CHECKED BY:	DL
DATE ISSUED:	1/26/24

S4.11

PRINT: 1/22/2024 9:52:25 AM

© 2024

Autodesk Docs://7222 - 5111 - PSE North Bend Precon Design/230731KW21239 Zervas PSE OTC - Struct - r22.rvt

1/22/2024 9:52:26 AM

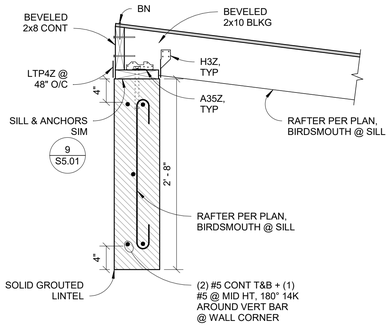

12 TRASH ENCLOSURE - HIGH EAVE
1" = 1'-0"

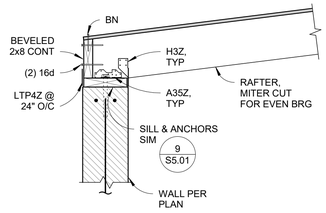

11 TRASH ENCLOSURE - LOW EAVE
1" = 1'-0"

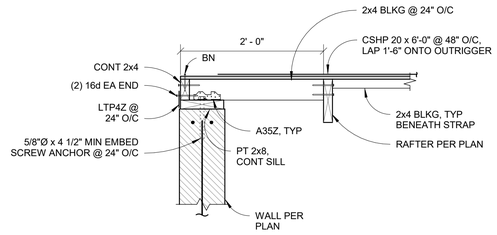

10 TRASH ENCLOSURE - TYP RAKE EDGE @ ROOF
1" = 1'-0"

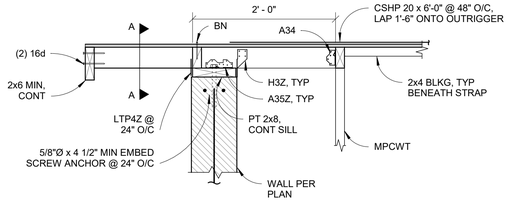

9 CONTROL HOUSE - TYP RAKE EDGE @ ROOF
1" = 1'-0"

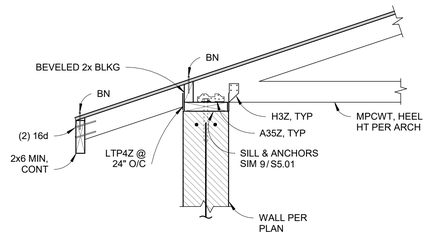

8 CONTROL HOUSE - TYP EAVE @ ROOF
1" = 1'-0"

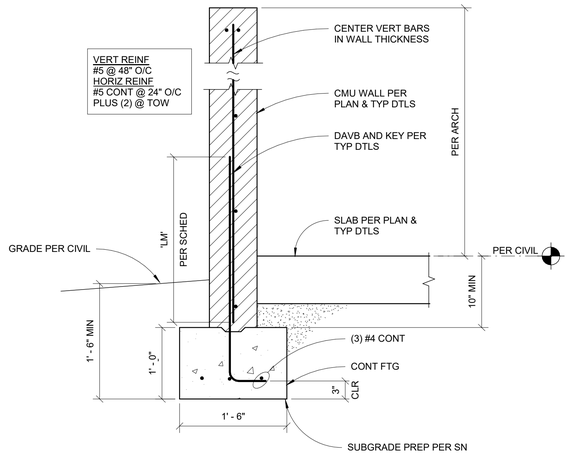

4 TYP SECTION AT CMU WALL FOOTING
1" = 1'-0"

NOTE
1. ALL MASONRY SHALL BE RUNNING BOND UNO ON PLANS.
2. ALL CMU WALLS SHALL BE GROUTED SOLID (ALL CELLS).
3. TYPICAL REINF SHOWN IS MINIMUM FOR ALL CMU WALLS. WHERE GREATER SIZE OR QUANTITY OF REINF PER DETAILS ELSEWHWERE ARE SHOWN, THOSE SHALL GOVERN OVER TYP REINF.
4. ALL BARS CONTINUOUS UNO.
5. TERMINATE (H) BARS w/ 180° HOOKS AROUND (V) BARS AT JAMBS & WHERE WALL END DOES NOT INTERSECT ANOTHER WALL.
6. PROVIDE ADD'L REINFORCING AT OPENINGS IN WALLS PER TYPICAL WALL OPENING DETAILS.
7. HORIZ AND VERT BAR SPACING SHALL NOT EXCEED 'L'/3, WHERE 'L' = LENGTH OF WALL PIER BETWEEN OPENINGS OR FROM OPENING TO END OF WALL OR CORNER.

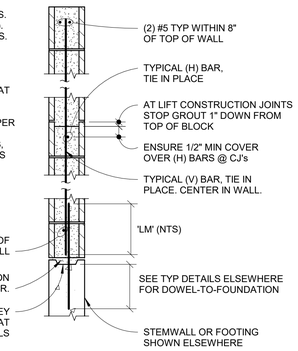

6 TYP CMU WALL SECTION
3/4" = 1'-0"

NOTE
REINF SHOWN ARE MINIMUMS, AND ARE IN ADDITION TO REINF REQ'D BY SCHEDULE, ELEVATION, OR DETAIL SHOWN ELSEWHERE.

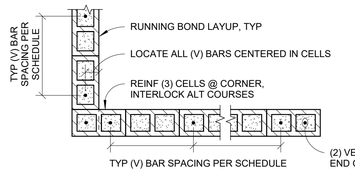

5 TYP CMU VERT REINFORCING LAYOUT
3/4" = 1'-0"

MASONRY LAP SPLICE LENGTH / DEVELOPMENT LENGTH 'LM' (INCHES)						
BAR SIZE	SMALLER OF BAR COVER TO NEAREST SIDE (INCLUDING MASONRY UNIT WALL) OR BAR CLEAR SPACING					
	1.5	2	2.5	3.5	4.5	5.5
#3	19	15	15	15	15	15
#4	34	25	20	20	20	20
#5	52	39	31	25	25	25

NOTES
1. POSITION ALL BARS IN WALLS PER DETAILS.
2. ENSURE 1/2" MIN GROUT COVER BETWEEN REBAR AND MASONRY UNIT WALL.
3. PROVIDE MINIMUM 1 1/2" COVER FROM OUTSIDE FACE OF MASONRY.
4. PROVIDE 1 1/2" MINIMUM CLEAR SPACE BETWEEN PARALLEL BARS.

7 TYP MASONRY LAP SCHEDULE
1 1/2" = 1'-0"

NOTES
1. VERTICAL JTS SHALL BE SPACED AND ALIGNED PER ARCH, BUT SHALL NOT EXCEED SPACING PER SCHEDULE, NOR EXCEED 15-FT FROM A CORNER, WHERE NOT OTHERWISE INDICATED.
2. AT WALL SURFACES AGAINST EARTH, PROVIDE FLEXIBLE WATERPROOF JOINT COVER PER ARCH.
3. PROVIDE WATERSTOP PER ARCH AT ALL JOINTS (NOT SHOWN).
4. PROVIDE CJ SUBMITTAL INDICATING PROPOSED LOCATIONS AND MATERIALS TO ARCH FOR REVIEW.

'TW'	8"
A	1 1/4"
B	PER ARCH, 3/4" MIN

WALL HT 'H'	H<3'-0"
MAX JT SPCG	9'-0"

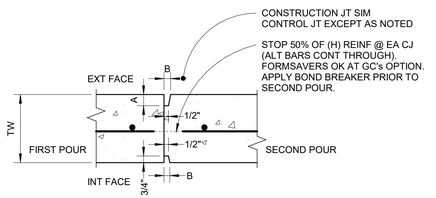

3 TYP CONC WALL CONTROL AND CONSTR JOINTS
1 1/2" = 1'-0"

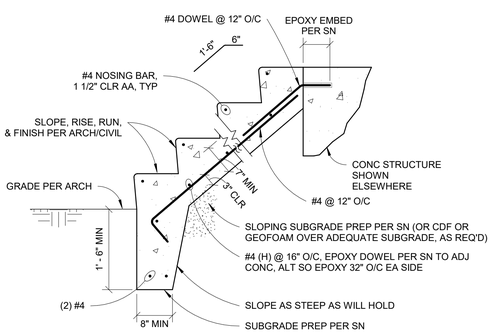

2 TYP CONC STAIR ON GRADE
3/4" = 1'-0"

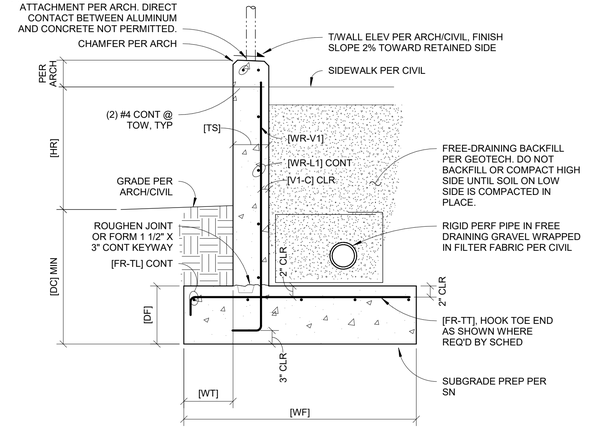

TYPE	[TS]	[HR]	[WF]	[WT]	[DF]	[DC]	[FR-TT]	[FR-TT] TOE HK?	[FR-TL]	[WR-V1]	[V1-C]	[WR-L1]
TYP	8"	<2'-6"	3'-0"	1'-0"	10"	1'-6"	#4@18"	N	(3)#4	#4@18"	2"	#4@12"

1 TYP RETAINING WALL
3/4" = 1'-0"

ZERVAS
ARCHITECTURE | INTERIOR DESIGN
zervasgroup.com
209 Prospect Street
Bellingham, WA 98225
360.734.4744

KINGWORKS STRUCTURAL ENGINEERS
600 Dupont St, Suite B
Bellingham, WA 98225
360.714.8260
www.king-works.com

DANIEL DAVIS LINKHART — STATE OF WASHINGTON — 41390 — STRUCTURAL ENGINEER — PROFESSIONAL ENGINEER — 1/22/24
DIGITAL SEAL ON PDF FILE

City of Puyallup
Development & Permitting Services
ISSUED PERMIT
Building | Planning
Engineering | Public Works
Fire | Traffic

100% CD SET

REV	ISSUED FOR	Date

PLAN NORTH

SCALE: As indicated

PSE - OPERATIONAL TRAINING CENTER

SITE STRUCTURE DETAILS

PROJECT#.	21239
DRAWN BY:	GK
CHECKED BY:	DL
DATE ISSUED:	1/26/24

S5.01

PRINT: 1/22/2024 9:52:26 AM

© 2024

Autodesk Docs://7222 - 5111 - PSE North Bend Precon Design/23073KW21239 Zervas PSE OTC - Struct - r22.rvt

1/22/2024 9:52:27 AM

PRCNC20240216

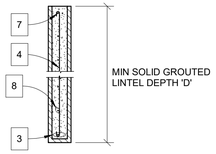

SECT A-A

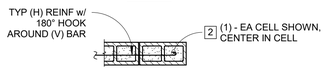

SECT B-B

NOTE
ALL REINF SHOWN IS MINIMUM @ OPENINGS ONLY, SEE ELEVATIONS AND DETAILS FOR OTHER WALL REINF REQ'D.

SCHEDULE

'W1'	MIN REQ'D 'D'	2 JAMB REINF	3 LINTEL REINF	4 LINTEL STIRRUPS	8 (H) LINTEL REINF
<4'-0"	16"	(1)#5 EA CELL	(1)#5	#4@16" O/C	#5@24" O/C

1 DOWEL ALL (V) BARS, LAP PER SCHEDULE.

2 JAMB REINF PER SCHED AND SECT B-B. AT DOOR OPENINGS EXTEND JAMB REINF FULL STORY HT OR AS FAR AS POSSIBLE TERMINATING IN 180° HOOK.

3 LINTEL FLEXURAL REINF PER SCHED AND SECT A-A.

4 LINTEL SHEAR REINF PER SCHED AND SECT A-A, IN ADDITION TO TYP FULL HT (V) REINF (NOT SHOWN). USE (1) LEG STIRRUP FOR 8" WALLS.

5 EXTEND (1) LAP LENGTH BEYOND RO OR AS FAR AS POSSIBLE w/ 180° HOOK AROUND (V) END / CORNER BAR, TYP.

6 (1)#5(H) MIN WITHIN 8" OF BOT OF RO.

7 TOP OF WALL CONT REINF

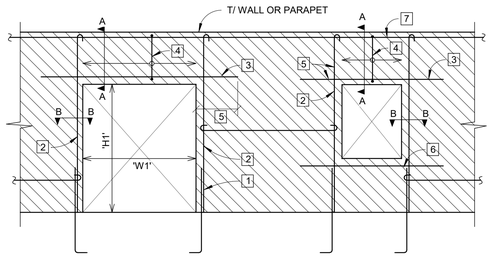

8 TYP REINF AT CMU WALL OPENINGS
1/4" = 1'-0"

NOTES
1. ALIGN HOLDOWNS TO CONTINUOUS FULL HT KING STUDS - DO NOT LAP ONTO JACK STUDS. SEE HEADER DETAIL FOR ADD'L INFO.
2. HOLDOWN SHIM, IF/WHERE REQ'D FOR ALIGNMENT, SHALL CONSIST OF 6'-0" MIN LENGTH OF 2x6. SISTER SHIM TO OTHER PLIES w/ NAILS EQ TO 'EN'. HOLDOWN SCREW LENGTHS SHALL BE INCREASED BY THE SHIM THICKNESS.

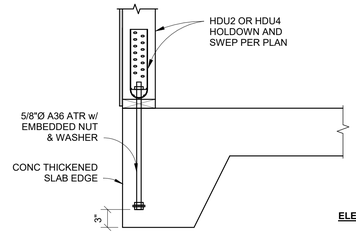

THICKENED SLAB EDGE CONDITION

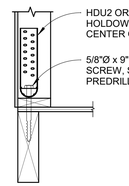

ELEVATED FRAMING CONDITION

7 TYP SHEARWALL HOLDOWNS
1" = 1'-0"

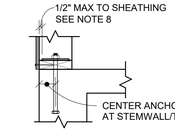

WASHER REQUIREMENTS
1. SHEARWALL AT STEMWALL OR TSE: HDG SIMPSON BPS 5/8-6
2. SHEARWALL AT TSF: HDG 3"x3"x0.229" MIN (OFFSET ANCHOR FROM STUD CL SO WASHER MEETS EDGE DIST REQMT PER NOTE 8)
3. NON-SHEARWALL: HDG FENDER WASHER

TYP SECTION AT STEMWALL

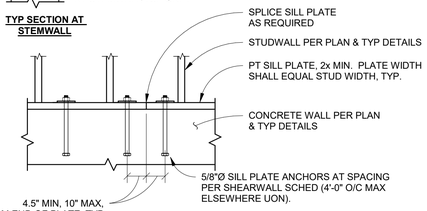

SILL ANCHOR OPTIONS
OPTION 1: CAST-IN-PLACE ANCHOR RODS; 7" MIN EMBEDMENT WITH 2" HOOK OR HEADED BOLT.
OPTION 2: MECH GALV SIMPSON TITEN HD ANCHORS, 3 1/2" MIN EMBEDMENT
OPTION 3: EPOXY ANCHORS PER SN, 5" MIN EMBEDMENT

NOTES
1. SET SILL PLATE FOR EVEN BEARING. PLACE MORTAR UNDER PLATE WHEN GAP EXCEEDS 1/8".
2. SEE SHEAR WALL SCHEDULE FOR ANCHOR SPACING AT SHEAR WALLS.
3. USE ONLY HOT DIP GALVANIZED SILL ANCHORS, WASHERS, CONNECTORS AND FASTENERS IN PRESSURE TREATED WOOD EXCEPT WHERE BORATE TREATED SILLS ARE USED. SEE STRUCTURAL NOTES FOR ADD'L INFORMATION.
4. THIS DETAIL DOES NOT APPLY TO HOLDOWN ANCHORS, SEE DETAIL ELSEWHERE.
5. POST-INSTALLED ANCHORS SHALL BE INSTALLED PER MFR's RECOMMENDATIONS AND REQUIRE SPECIAL INSPECTION. SEE STRUCTURAL NOTES FOR ADDITIONAL REQUIREMENTS.
6. HOLE Ø IN SILL PLATE SHALL BE 1/16" MAX LARGER THAN THE ANCHOR Ø.
7. HOLE IN PL WASHER MAY BE 1/16" MAX LARGER THAN THE ANCHOR Ø OR DIAGONALLY SLOTTED WITH MAX SLOT LENGTH OF 1 3/4", PROVIDED A STANDARD CUT WASHER IS PLACED BETWEEN PLATE WASHER AND NUT.
8. ALL PLATE WASHERS AT SHEARWALLS SHALL EXTEND TO WITHIN 1/2" OF THE EDGE OF THE BOTTOM PLATE ON THE SHEATHED SIDE(S).

6 TYP WALL SILL ANCHORS AT CONCRETE
1" = 1'-0"

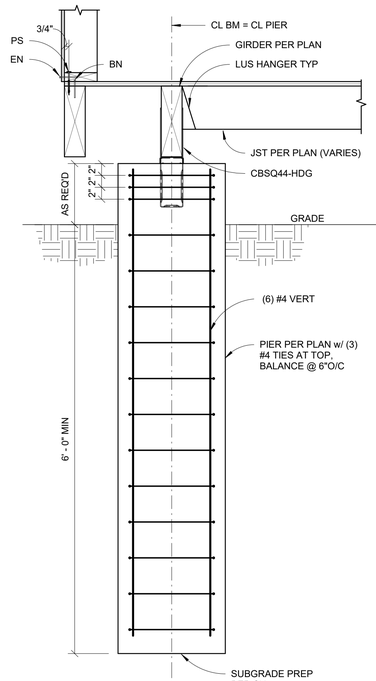

3 VILLAGE - TYP SECTION AT PIER BENEATH BUILDING
1" = 1'-0"

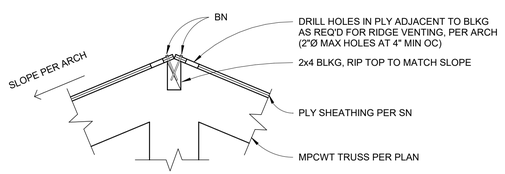

5 TYP ROOF RIDGE BLOCKING
1 1/2" = 1'-0"

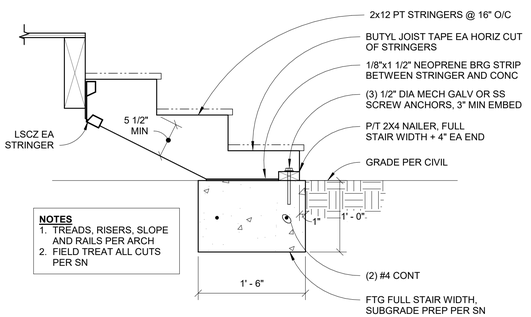

NOTES
1. TREADS, RISERS, SLOPE AND RAILS PER ARCH
2. FIELD TREAT ALL CUTS PER SN

2 VILLAGE - TYP WOOD STAIRS
1" = 1'-0"

TYP RIM BEAMS AT CORNER

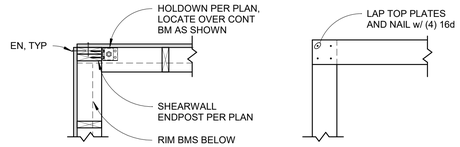

TYP WALL FRAMING AT CORNER

TYP TOP PLATES AT CORNER

4 VILLAGE - TYP FLOOR AND WALL CORNER FRAMING
3/4" = 1'-0"

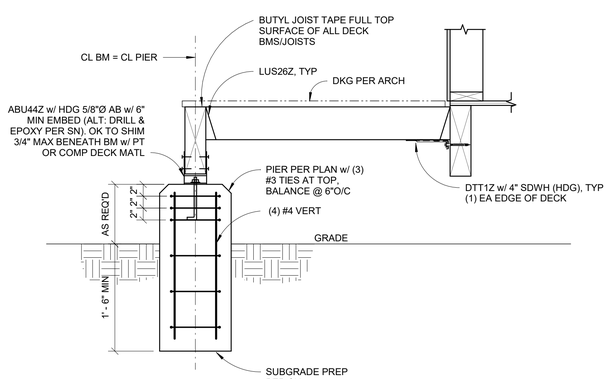

1 VILLAGE - TYP DECK SECTION
1" = 1'-0"

ZERVAS
ARCHITECTURE | INTERIOR DESIGN
zervasgroup.com
209 Prospect Street
Bellingham, WA 98225
360.734.4744

KINGWORKS STRUCTURAL ENGINEERS
600 Dupont St, Suite B
Bellingham, WA 98225
360.714.8260
www.king-works.com



DIGITAL SEAL ON PDF FILE

City of Puyallup
Development & Permitting Services
ISSUED PERMIT

Building	Planning
Engineering	Public Works
Fire	Traffic

100% CD SET

REV	ISSUED FOR	Date

PLAN NORTH

SCALE:
As indicated

PSE - OPERATIONAL TRAINING CENTER

SITE STRUCTURE DETAILS

PROJECT#.	21239
DRAWN BY:	GK
CHECKED BY:	DL
DATE ISSUED:	1/26/24

S5.02

PRINT: 1/22/2024 9:52:27 AM

© 2024

Autodesk Docs://7222 - 5111 - PSE North Bend Precon Design/23073KW21239 Zervas PSE OTC - Struct - r22.rvt

21239

1/22/2024 9:52:27 AM

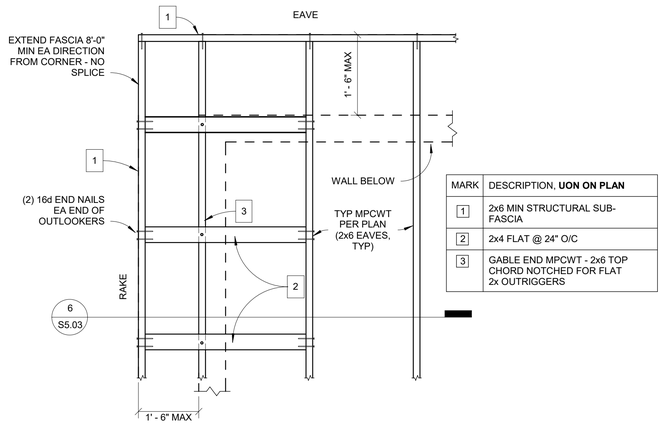

MARK	DESCRIPTION, **UON ON PLAN**
1	2x6 MIN STRUCTURAL SUB-FASCIA
2	2x4 FLAT @ 24" O/C
3	GABLE END MPCWT - 2x6 TOP CHORD NOTCHED FOR FLAT 2x OUTRIGGERS

7 WOOD FRAMING - TYP ROOF EAVE CORNERS
3/4" = 1'-0"

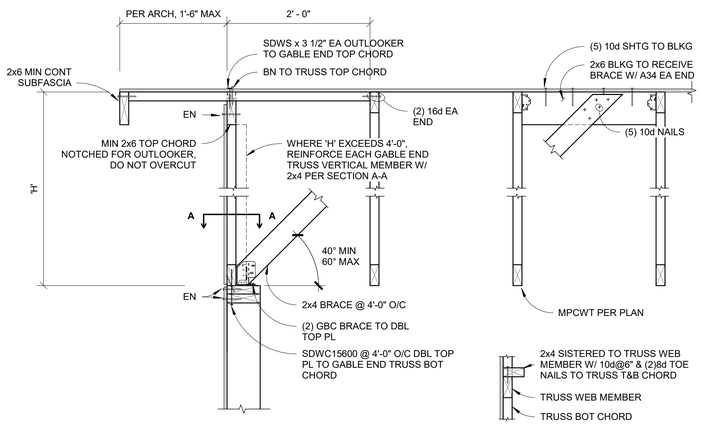

SECTION A-A

6 TYP GABLE END BRACING AT WOOD WALL
1" = 1'-0"

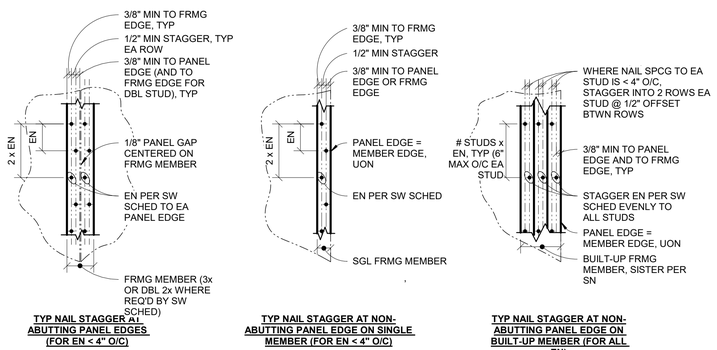

NOTE
VERTICAL (STUD) CONFIGURATIONS SHOWN; STAGGER AT HORIZONTAL (PLATE OR BLKG) CONFIGURATIONS SHALL BE SIMILAR

3 TYP SHEARWALL NAIL STAGGER
1 1/2" = 1'-0"

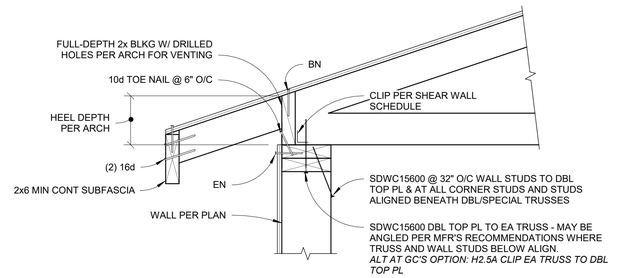

5 TYP MPCWT BEARING
1 1/2" = 1'-0"

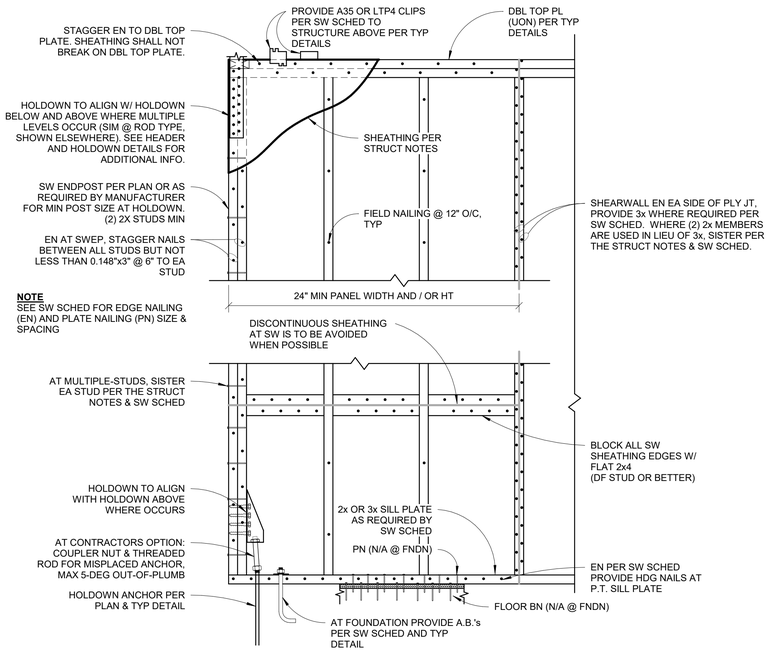

NOTE
SEE SW SCHED FOR EDGE NAILING (EN) AND PLATE NAILING (PN) SIZE & SPACING

2 TYP SHEARWALL CONSTRUCTION
1" = 1'-0"

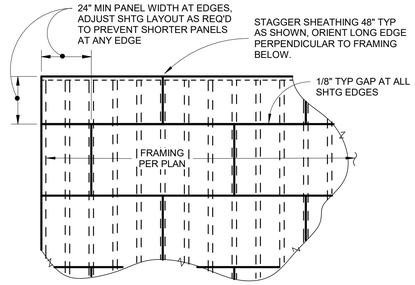

NOTES
1. SEE SN AND PLANS FOR SHEATHING THICKNESS AND NAILING.
2. SEE SN AND TYP NAIL STAGGER DETAIL FOR BOUNDARY NAILING (BN). BN APPLIES TO ALL PANEL EDGES, DRAG STRUTS, OR WHERE OTHERWISE INDICATED ON PLAN OR DETAILS.
3. MINIMUM PANEL EDGE DISTANCE FOR NAILS IS 1/2".

4 TYP ROOF SHEATHING LAYOUT
1/4" = 1'-0"

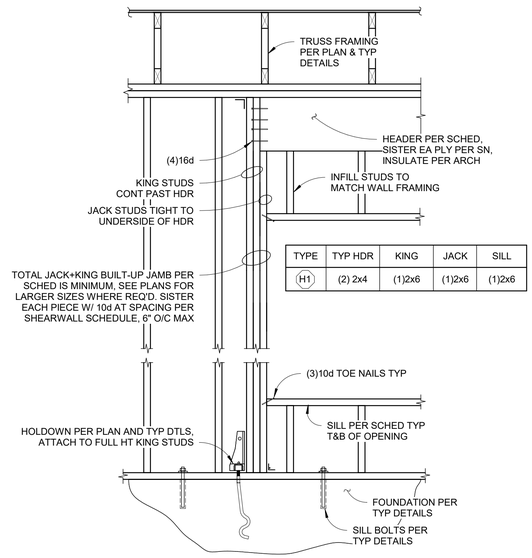

TYPE	TYP HDR	KING	JACK	SILL
H1	(2) 2x4	(1)2x6	(1)2x6	(1)2x6

1 WOOD FRAMING - TYP HEADER FRAMING
3/4" = 1'-0"

ZERVAS
ARCHITECTURE | INTERIOR DESIGN
zervasgroup.com
209 Prospect Street
Bellingham, WA 98225
360.734.4744

KINGWORKS STRUCTURAL ENGINEERS
600 Dupont St, Suite B
Bellingham, WA 98225
360.714.8260
www.king-works.com

DANIEL DAVIS LINKHART — STATE OF WASHINGTON — 41390 — STRUCTURAL ENGINEER — PROFESSIONAL ENGINEER — 1/22/24

DIGITAL SEAL ON PDF FILE

City of Puyallup
Development & Permitting Services
ISSUED PERMIT

Building	Planning
Engineering	Public Works
Fire	Traffic

100% CD SET

REV	ISSUED FOR	Date

PLAN NORTH

SCALE:
As indicated

PSE - OPERATIONAL TRAINING CENTER

SITE STRUCTURE DETAILS

PROJECT#.	21239
DRAWN BY:	GK
CHECKED BY:	DL
DATE ISSUED:	1/26/24

S5.03

PRINT: 1/22/2024 9:52:27 AM

© 2024

Autodesk Docs://7222 - 5111 - PSE North Bend Precon Design/23073KW21239 Zervas PSE OTC - Struct - r22.rvt

1/22/2024 9:52:28 AM

PRCNC20240216

ZERVAS
ARCHITECTURE | INTERIOR DESIGN
zervasgroup.com
209 Prospect Street
Bellingham, WA 98225
360.734.4744

KINGWORKS STRUCTURAL ENGINEERS
600 Dupont St, Suite B
Bellingham, WA 98225
360.714.8260
www.king-works.com

DANIEL DAVIS LINKHART — STATE OF WASHINGTON — 41390 — STRUCTURAL ENGINEER — PROFESSIONAL ENGINEER — 1/22/24

DIGITAL SEAL
ON PDF FILE

City of Puyallup
Development & Permitting Services
ISSUED PERMIT

Building	Planning
Engineering	Public Works
Fire	Traffic

NOTES
1. EXTENTS AND LOCATIONS OF PADS SHALL BE PER MECHANICAL.
2. THIS DETAIL IS INTENDED FOR USE WITH:
   A. CU-06-01 AT CONTROL HOUSE
   B. CAD-01/AIR TANKS AT COMPRESSOR BUILDING
3. PROVIDE ANCHORAGE CALCULATIONS AND DETAILS FOR ALL SUPPORTED EQUIPMENT FOR REVIEW BY KW PRIOR TO CONSTRUCTION OF PADS

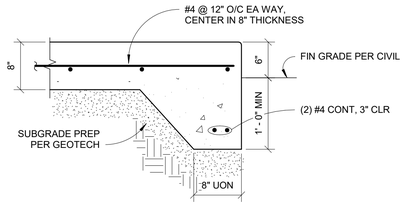

4 TYP SITE MECH EQUIPMENT EXTERIOR HOUSEKEEPING PAD
1" = 1'-0"

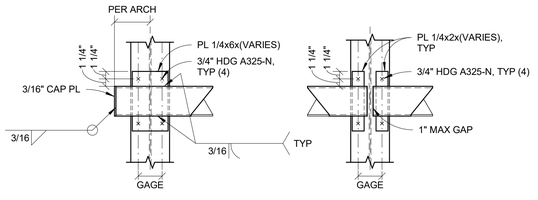

SEC A-A @ CONT OR END PURLIN

SEC A-A @ PURLIN SPLICE

Welding to be done by an individual or fabricator who is WABO certified or approved by the Building Official to perform the work. All welds must be inspected and approved by a WABO certified special inspector.

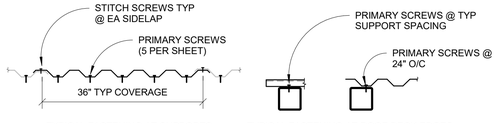

TYPICAL FASTENING AT SUPPORTS

TYPICAL FASTENING AT ROOF DECK EDGES

NOTES
1. NO SHEET SPLICES PERMITTED, ALL SHEETS SHALL BE FULL LENGTH.
2. PRIMARY FASTENERS TO STRUCTURAL STEEL SHALL BE #12 MIN STAINLESS STEEL SELF-DRILLING SCREWS w/ WATERPROOFING GASKET BENEATH HEX HEAD .
3. SIDELAP FASTENERS SHALL BE #12 MIN STAINLESS STEEL SELF-DRILLING SCREWS w/ WATERPROOFING GASKET BENEATH HEX HEAD .
4. DECK SIDELAPS SHALL BE STANDARD NESTED TYPE PER MFR.

3 TYP HR-36 ROOF DECK FASTENING
3/4" = 1'-0"

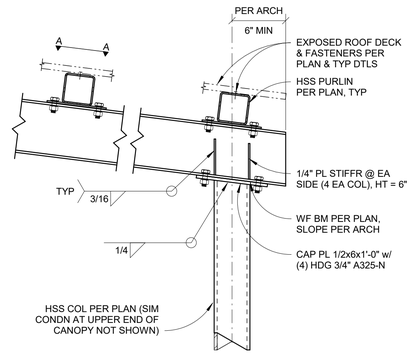

2 VILLAGE - BLEACHER/MANIFOLD COVER TYP ROOF FRAMING
1" = 1'-0"

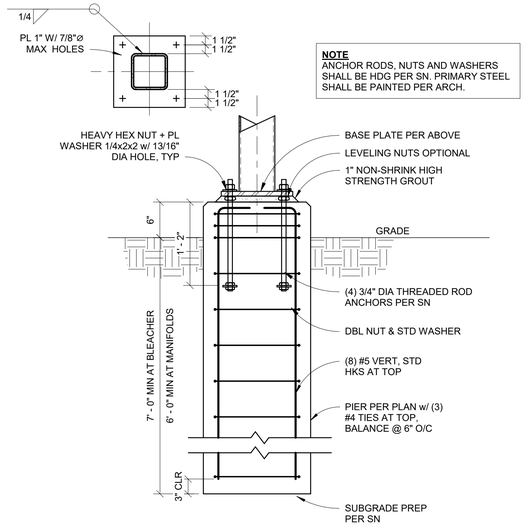

NOTE
ANCHOR RODS, NUTS AND WASHERS SHALL BE HDG PER SN. PRIMARY STEEL SHALL BE PAINTED PER ARCH.

1 VILLAGE - BLEACHER/MANIFOLD COVER TYP COL BASE AND FOUNDATION
1" = 1'-0"

100% CD SET

REV	ISSUED FOR	Date

PLAN NORTH

SCALE:
As indicated

PSE - OPERATIONAL TRAINING CENTER

SITE STRUCTURE DETAILS

PROJECT#.	21239
DRAWN BY:	GK
CHECKED BY:	DL
DATE ISSUED:	1/26/24

S5.04

PRINT. 1/22/2024 9:52:28 AM

© 2024

21239
Autodesk Docs://7222 - 5111 - PSE North Bend Precon Design/23073IKW21239 Zervas PSE OTC - Struct - r22.rvt

1/22/2024 9:52:29 AM

Autodesk Docs://7222 - 5111 - PSE North Bend Precon Design/230731KW21239 Zervas PSE OTC - Struct - r22.rvt

21239

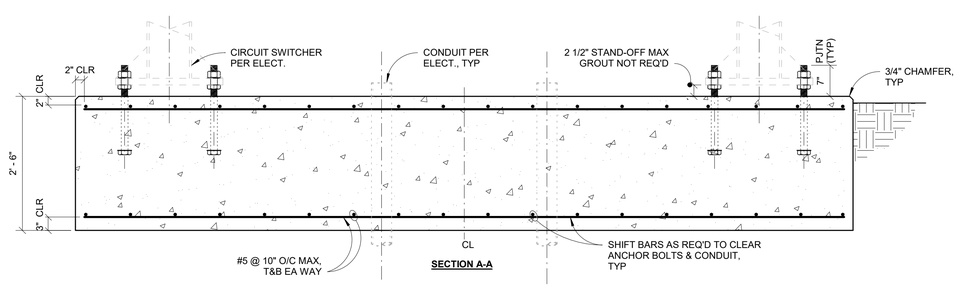

SECTION A-A

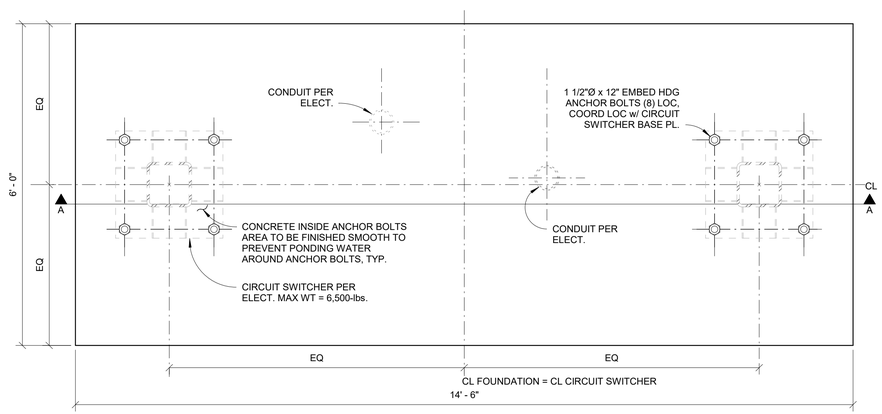

PLAN VIEW

2 CIRCUIT SWITCHER FOUNDATION
3/4" = 1'-0"

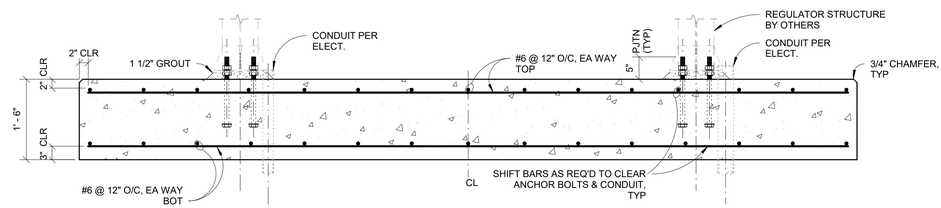

SECTION A-A

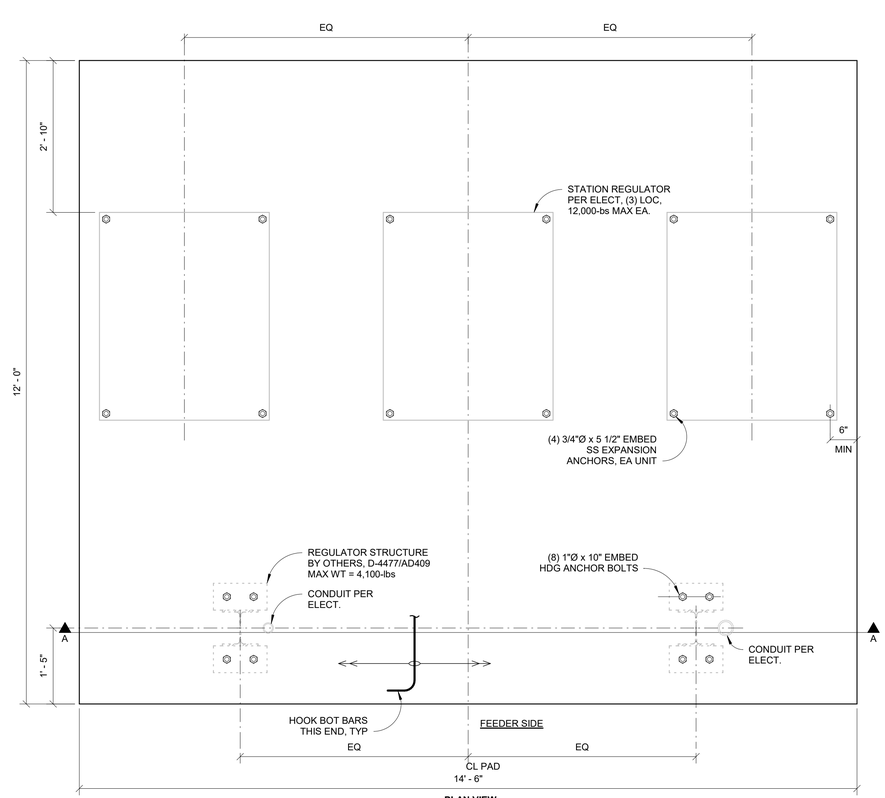

PLAN VIEW

1 12.5kV PAD - 3 SINGLE PHASE REGULATORS
3/4" = 1'-0"

PRCNC20240216

ZERVAS
ARCHITECTURE | INTERIOR DESIGN
zervasgroup.com
209 Prospect Street
Bellingham, WA 98225
360.734.4744

KINGWORKS STRUCTURAL ENGINEERS
600 Dupont St, Suite B
Bellingham, WA 98225
360.714.8260
www.king-works.com

DANIEL DAVIS LINKHART
STATE OF WASHINGTON
41390
STRUCTURAL ENGINEER
PROFESSIONAL ENGINEER
1/22/24

DIGITAL SEAL
ON PDF FILE

City of Puyallup
Development & Permitting Services
ISSUED PERMIT

Building	Planning
Engineering	Public Works
Fire	Traffic

100% CD SET

REV	ISSUED FOR	Date

PLAN NORTH

SCALE:
3/4" = 1'-0"

PSE - OPERATIONAL TRAINING CENTER

EQUIPMENT PADS - FOUNDATION / ELEVATIONS AND DETAILS

PROJECT#.	21239
DRAWN BY:	GK
CHECKED BY:	DL
DATE ISSUED:	1/26/24

S6.01

PRINT. 1/22/2024 9:52:29 AM

© 2024

1/22/2024 9:52:29 AM

PRCNC20240216

ZERVAS
ARCHITECTURE | INTERIOR DESIGN
zervasgroup.com
209 Prospect Street
Bellingham, WA 98225
360.734.4744

KINGWORKS STRUCTURAL ENGINEERS
600 Dupont St, Suite B
Bellingham, WA 98225
360.714.8260
www.king-works.com



DIGITAL SEAL
ON PDF FILE

City of Puyallup
Development & Permitting Services
ISSUED PERMIT

Building	Planning
Engineering	Public Works
Fire	Traffic

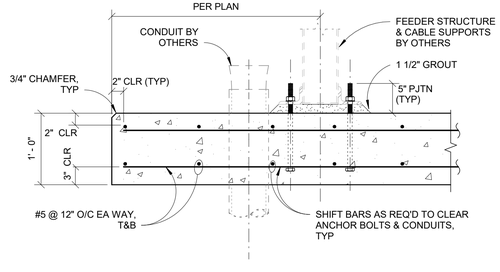

SECTION A-A
1"=1'-0"

TRANSFORMER SIDE

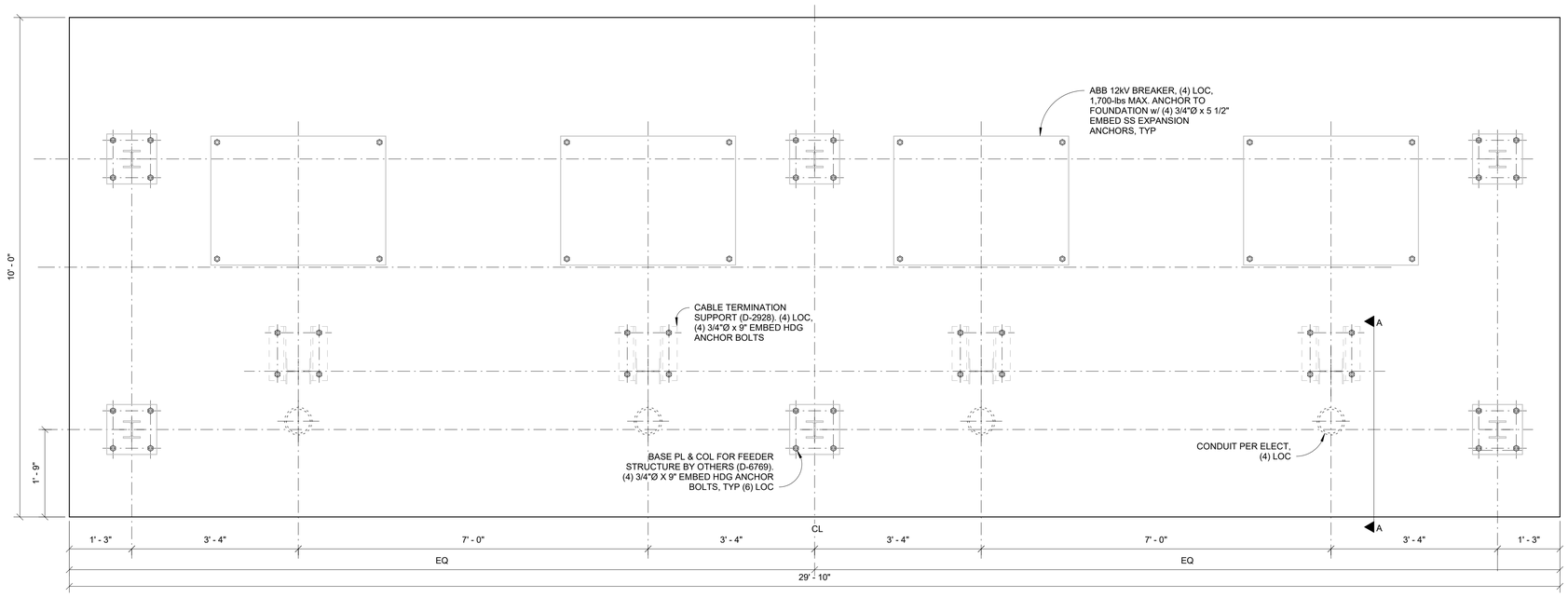

PLAN VIEW

1 12.5kV PRE-ASSEMBLED FEEDER STRUCTURE PAD
3/4" = 1'-0"

100% CD SET

REV	ISSUED FOR	Date

PLAN NORTH

SCALE:
As indicated

PSE - OPERATIONAL TRAINING CENTER

EQUIPMENT PADS - FOUNDATION / ELEVATIONS AND DETAILS

PROJECT#.	21239
DRAWN BY:	GK
CHECKED BY:	DL
DATE ISSUED:	1/26/24

S6.02

PRINT: 1/22/2024 9:52:29 AM

© 2024

21239
Autodesk Docs://7222 - 5111 - PSE North Bend Precon Design/230731KW21239 Zervas PSE OTC - Struct - r22.rvt

1/22/2024 9:52:30 AM

PRCNC20240216

NOTE
LIGHT BROOM FINISH AROUND FOUNDATION PERIMETER SHALL BE IN DIRECTION OF SLOPE. REMOVE ALL CONCRETE SPLATTER FROM SURFACES, LEAVING CLEAN & SMOOTH.

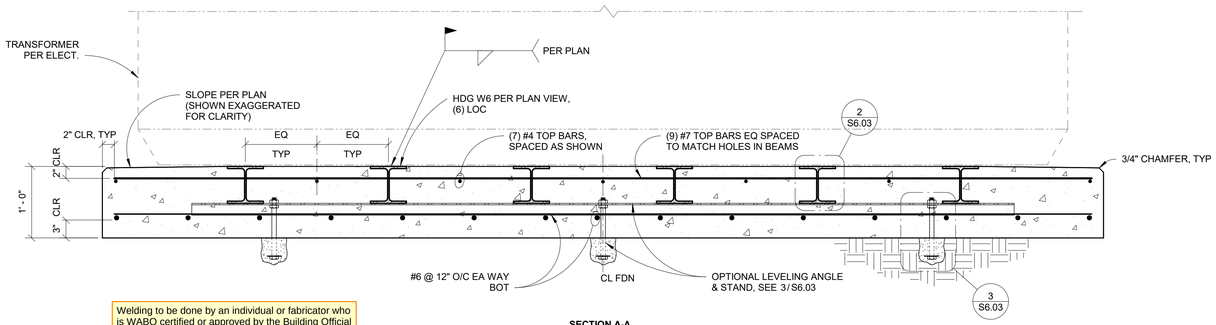

Welding to be done by an individual or fabricator who is WABO certified or approved by the Building Official to perform the work. All welds must be inspected and approved by a WABO certified special inspector.

SECTION A-A

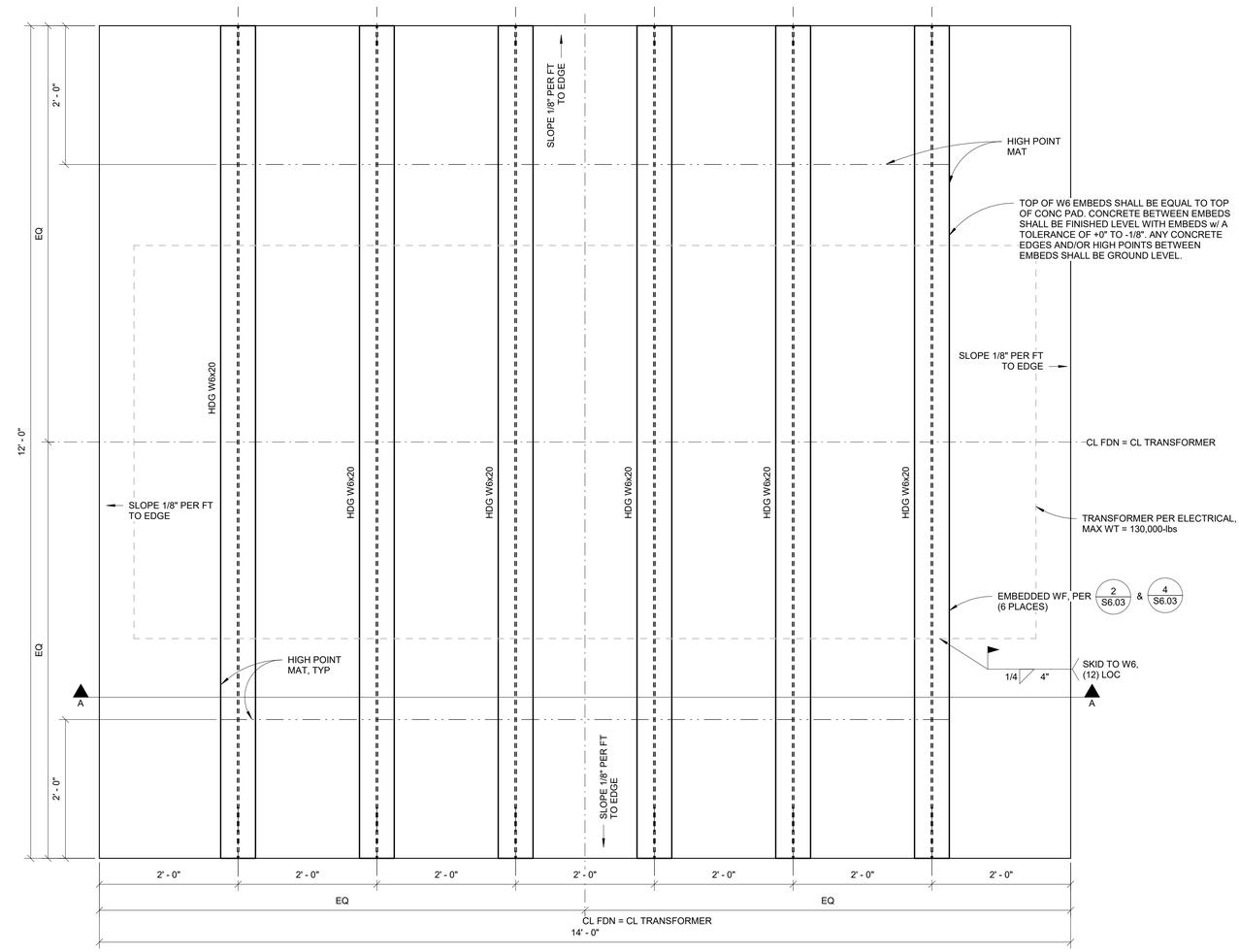

PLAN VIEW

1 TRANSFORMER FOUNDATION
1" = 1'-0"

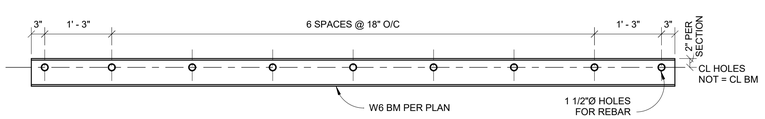

4 EMBEDDED W6 PROFILE @ TRANSFORMER FDN
3/4" = 1'-0"

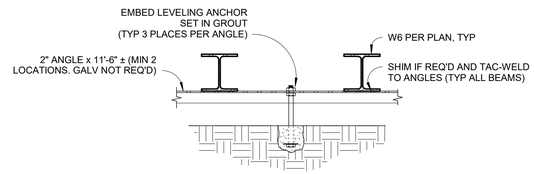

3 OPTIONAL LEVELING SUPPORT FOR W6's
1" = 1'-0"

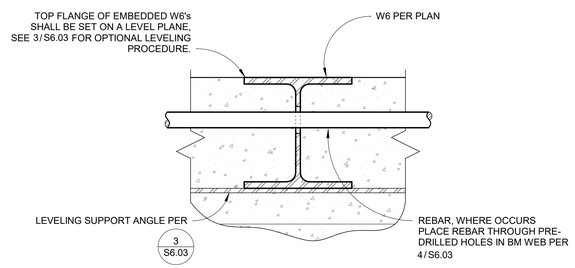

2 STEEL BEAM @ TRANSFORMER FDN
3" = 1'-0"

ZERVAS
ARCHITECTURE | INTERIOR DESIGN
zervasgroup.com
209 Prospect Street
Bellingham, WA 98225
360.734.4744

KINGWORKS STRUCTURAL ENGINEERS
600 Dupont St, Suite B
Bellingham, WA 98225
360.714.8260
www.king-works.com

DANIEL DAVIS LINKHART — STATE OF WASHINGTON — 41390 — STRUCTURAL ENGINEER — PROFESSIONAL ENGINEER — 1/22/24
DIGITAL SEAL ON PDF FILE

City of Puyallup
Development & Permitting Services
ISSUED PERMIT
Building | Planning
Engineering | Public Works
Fire | Traffic

100% CD SET

REV	ISSUED FOR	Date

PLAN NORTH

SCALE: As indicated

PSE - OPERATIONAL TRAINING CENTER

EQUIPMENT PADS - FOUNDATION / ELEVATIONS AND DETAILS

PROJECT#.	21239
DRAWN BY:	GK
CHECKED BY:	DL
DATE ISSUED:	1/26/24

S6.03

PRINT: 1/22/2024 9:52:30 AM

© 2024

Autodesk Docs://7222 - 5111 - PSE North Bend Precon Design/230731KW21239 Zervas PSE OTC - Struct - r22.rvt

21239

1/22/2024 9:52:30 AM

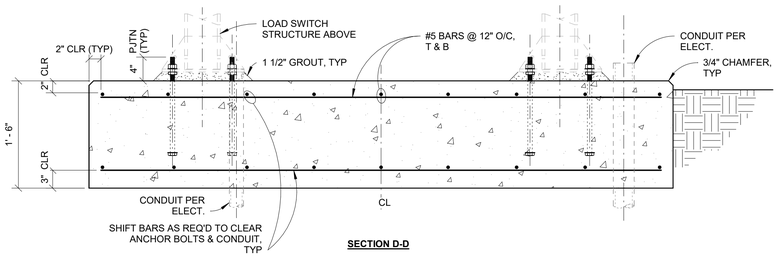

SECTION D-D

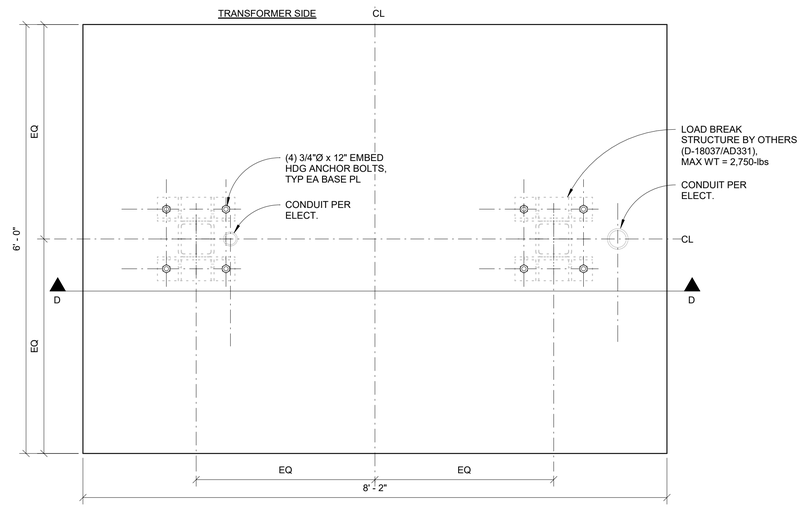

PLAN VIEW

3 12.5kV LOAD BREAK SWITCH FOUNDATION
1" = 1'-0"

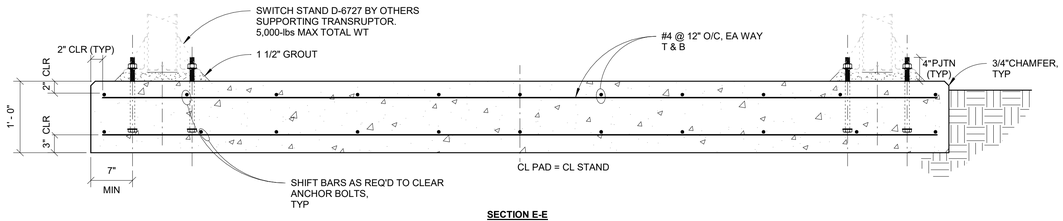

SECTION E-E

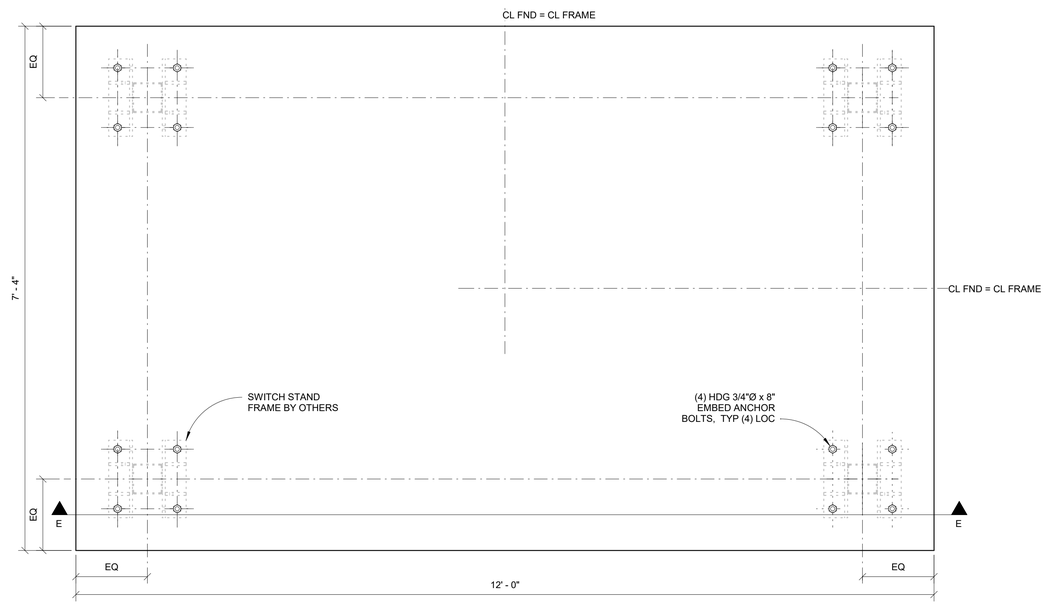

PLAN VIEW

4 115kV SWITCH STAND FOUNDATION
1" = 1'-0"

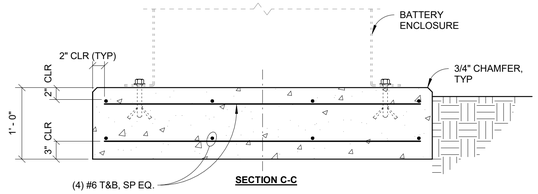

SECTION C-C

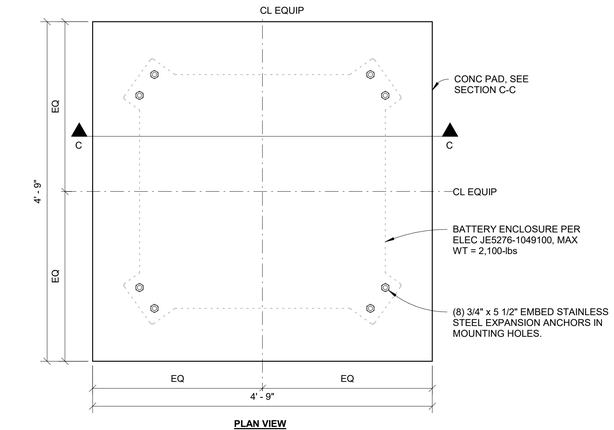

PLAN VIEW

2 BATTERY ENCLOSURE FOUNDATION
1" = 1'-0"

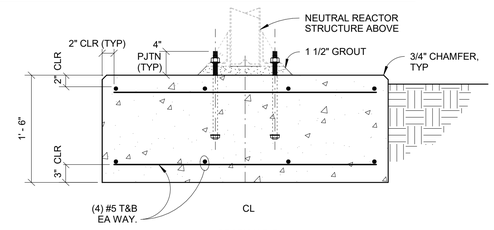

SECTION B-B

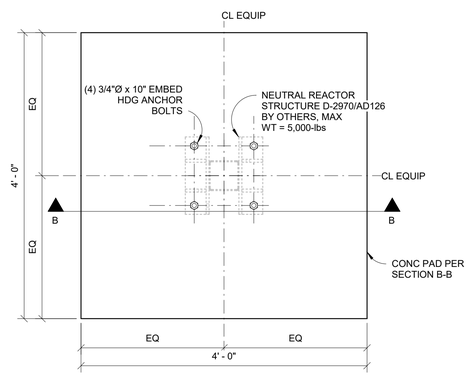

PLAN VIEW

1 NEUTRAL REACTOR FOUNDATION
1" = 1'-0"

ZERVAS
ARCHITECTURE | INTERIOR DESIGN
zervasgroup.com
209 Prospect Street
Bellingham, WA 98225
360.734.4744

KINGWORKS STRUCTURAL ENGINEERS
600 Dupont St, Suite B
Bellingham, WA 98225
360.714.8260
www.king-works.com

DANIEL DAVIS LINKHART
STATE OF WASHINGTON
41390
STRUCTURAL ENGINEER
PROFESSIONAL ENGINEER
1/22/24
DIGITAL SEAL ON PDF FILE

City of Puyallup
Development & Permitting Services
ISSUED PERMIT

Building	Planning
Engineering	Public Works
Fire	Traffic

100% CD SET

REV	ISSUED FOR	Date

PLAN NORTH

SCALE:
1" = 1'-0"

PSE - OPERATIONAL TRAINING CENTER

EQUIPMENT PADS - FOUNDATION / ELEVATIONS AND DETAILS

PROJECT#.	21239
DRAWN BY:	GK
CHECKED BY:	DL
DATE ISSUED:	1/26/24

S6.04

PRINT: 1/22/2024 9:52:30 AM

© 2024

21239
Autodesk Docs://7222 - 5111 - PSE North Bend Precon Design/23073\KW21239 Zervas PSE OTC - Struct - r22.rvt

Autodesk Docs://7222 - 5111 - PSE North Bend Precon Design/7222s111_MMFS_MAP_PSE-OTC_R22.rvt

LEGAL DESCRIPTION

PARCEL NUMBER: 0420211030

LEGAL DESCRIPTION: SECTION 21 TOWNSHIP 20 RANGE 04

PLUMBING SCOPE OF WORK

- SINGLE STORY BUILDING WITH DOMESTIC HOT/COLD WATER AND WASTE/VENT PIPING TO PLUMBING FIXTURES. COMPRESSED AIR TO WORKSTATIONS.

PLUMBING GENERAL ABBREVIATIONS

ABBV	FULL NAME	ABBV	FULL NAME	ABBV	FULL NAME
AAV	AIR ADMITTANCE VALVE	DN	DOWN	NIC	NOT IN CONTRACT
ABV	ABOVE	DS	DOWNSPOUT	NSF	NATIONAL SANITATION FOUNDATION
AFF	ABOVE FINISHED FLOOR	DWG	DRAWING	NTS	NOT TO SCALE
AP	ACCESS PANEL	E	EXISTING	ORD	OVERFLOW ROOF DRAIN
BEL	BELOW	ELEV	ELEVATION	POC	POINT OF CONNECTION
BFP	BACKFLOW PREVENTER	ET	EXPANSION TANK	PRV	PRESSURE REDUCING VALVE
BOP	BOTTOM OF PIPE	EWH	ELECTRIC WATER HEATER	PVC	POLYVINYL CHLORIDE
BV	BALL VALVE	F	FIRE	RD	ROOF DRAIN
BWV	BACK WATER VALVE	FCO	FLOOR CLEAN OUT	RPBA	REDUCED PRESSURE BACKFLOW ASSY
CB	CATCH BASIN	FD	FLOOR DRAIN	TOG	TOP OF GRATE
CFF	CAP FOR FUTURE	FU	FIXTURE UNIT	UG	UNDER GROUND
CI	CAST IRON	GCO	GRADE CLEANOUT	UNO	UNLESS NOTED OTHERWISE
CL	CENTER LINE	GI	GREASE INTERCEPTOR	VTR	VENT THRU ROOF
CO	CLEAN OUT	GPM	GALLONS PER MINUTE	W/	WITH
CPVC	CPVC MATERIAL	GWH	GAS WATER HEATER	WCO	WALL CLEAN OUT
DCBP	DOUBLE CHECK BACKFLOW PREVENTER	HB	HOSE BIBB	WH	WALL HYDRANT
DCVA	DOUBLE CHECK VALVE ASSEMBLY	HP	HIGH PRESSURE	WHA	WATER HAMMER ARRESTOR
DCW	DOMESTIC COLD WATER	IE	INVERT ELEVATION	WM	WATER METER
DHW	DOMESTIC HOT WATER	MFR	MANUFACTURER	WSFU	WATER SERVICE FIXTURE UNIT
DEMO	DEMOLISH	MH	MANHOLE	YH	YARD HYDRANT
DFU	DRAINAGE FIXTURE UNIT				

PLUMBING SYMBOL LEGEND

SYMBOL	DESCRIPTION	ABBV	SYMBOL	DESCRIPTION	ABBV
	VALVE TWO-WAY CONTROL	2WAY		PIPE - EXISTING	
	VALVE THREE-WAY CONTROL	3WAY	6" CHWS	PIPE - DEMO	
AF	VALVE AUTOMATIC FLOW CONTROL	AF	6" CHWS	PIPE - NEW	
	VALVE BALANCING	BALV		PIPE - FUTURE	
	VALVE BALANCING AUTOMATIC	ABALV		PIPE - SIZE & ABBREVIATION	
	VALVE BALL - FULL PORTED	BV		PIPE - SIZE & ABBREVIATION WITH INSULATION	
	VALVE BALL - W/ 3/4" HOSE ADAPTOR	BV W/ HA		FLEX PIPE	
	VALVE CHECK	CV		PIPE - HEAT TRACE	
	VALVE GAS COCK	GC		PUMP	
	VALVE GATE	GV		EXPANSION TANK	ET
	VALVE GLOBE	GLV		60° OFFSET FOR SUDS	60° OFST
	VALVE PRESSURE REDUCING	PRV	FLTR-1	DOMESTIC PEX MANIFOLD	MFLD
	VALVE PRESSURE RELIEF	RV	WC-1	PLUMBING TRAP	TRAP
	VALVE SOLENOID	SV	WTR-1	PLUMBING FIXTURE N.I.C. TAG	
	WATER HAMMER ARRESTOR	WHA	1/2% SLOPE	PLUMBING FIXTURE TAG	
	DOUBLE CHECK BACKFLOW PREVENTER	DCBP	1%SLOPE	PLUMBING FIXTURE	
	REDUCED PRESS. BACKFLOW PREVENTER	RPBP	2% SLOPE	PLUMBING EQUIPMENT TAG	
	PRESSURE INDICATOR	PRESS		1/16" PER FOOT PIPE SLOPE	
	TEMPERATURE INDICATOR	THERM		1/8" PER FOOT PIPE SLOPE	
M	SUB-METER WATER FLOW	MTR		1/4" PER FOOT PIPE SLOPE (TYP. UNO)	
	PRESSURE / TEMPERATURE PORT	P&T		VENT THROUGH ROOF	VTR
	STRAINER	STRN		FLOOR CLEANOUT	FCO
	UNION	UNION		WALL CLEANOUT	WCO
	HOSE BIBB	HB		FLOOR DRAINS	FD
	PIPE BREAK - PIG TAIL			FLOOR SINKS	FS
	POINT OF CONNECTION	P.O.C.		ROOF DRAIN (RISER)	RD
	FLOW ARROW			OVER-FLOW DRAIN (RISER)	OD
	CONCENTRIC REDUCER	CR		ROOF, OVERFLOW, & COMBINATION DRAINS	OD RD
	THERMAL EXPANSION DEVICE	TED		FLOOR DRAIN	FD

PLUMBING SYSTEM LEGEND

LINE TYPE & ABBR	FULL NAME	LINE TYPE & ABBR	FULL NAME
	ACID		**GAS, NATURAL**
AV	ACID VENT	NG-H	NATURAL GAS HIGH PRESSURE
AW	ACID WASTE	NG-L	NATURAL GAS LOW PRESSURE
	BEVERAGE	NG-M	NATURAL GAS MEDIUM PRESSURE
BEVG	BEVERAGE CONDUIT	NGV	NATURAL GAS VENT
	DOMESTIC WATER	NG-CONDUIT	NATURAL GAS CONDUIT
DCW	DOMESTIC COLD WATER		**SANITARY SEWER**
DCW-UG	DOMESTIC COLD WATER (UNDERGROUND)	GD	GARAGE DRAIN
DCW-HP	DOMESTIC COLD WATER - HIGH PRESSURE	GW	GREASE WASTE
DFW	DOMESTIC FILTERED WATER	GW-UG	GREASE WASTE (UNDERGROUND)
DHW	DOMESTIC HOT WATER	IW	INDIRECT WASTE
DHW-HT	DOMESTIC HOT WATER HIGH TEMP	LV	LAB VENT
DHWC	DOMESTIC HOT WATER CIRC	LW	LAB WASTE
DHWC-HT	DOMESTIC HOT WATER CIRC HIGH TEMP	PSS	PUMPED SANITARY SEWER
DHW-HP	DOMESTIC HOT WATER - HIGH PRESSURE	PW	PUMPED WASTE
DHWC-HP	DOMESTIC HOT WATER CIRC - HIGH PRESS	VW	VACUUM WASTE
DTW	DOMESTIC TEMPERED WATER	V	VENT
DTWC	DOMESTIC TEMPERED WATER CIRC	W	WASTE
	FLUE	SS	SANITARY SEWER
FLU-CPVC	FLUE VENT - CPVC		**STORM**
	GAS	FTDR	FOOTING DRAIN
COMB-PVC	COMBUSTION AIR - PVC	ORL	OVERFLOW RAIN LEADER
	GAS, MEDICAL	RL	RAIN LEADER
AR	ARGON	PSD	PUMPED STORM DRAIN
CO2	CARBON DIOXIDE	SD	STORM DRAIN
HE	HELIUM		**NON-POTABALE**
IA	INSTRUMENT AIR	DI	DEIONIZED WATER
IA-IN	INSTRUMENT AIR INTAKE	IRR	IRRIGATION WATER
LA	LAB AIR	NPCW	NON POTABLE COLD WATER
LA-IN	LAB AIR INTAKE	NPFW	NON POTABLE FILTERED WATER
MA	MEDICAL AIR	NPHW	NON POTABLE HOT WATER
MA-IN	MEDICAL AIR INTAKE	NPHW-HT	NON POTABLE HOT WATER HIGH TEMP
MVAC	MEDICAL VACUUM	NPHWC	NON POTABLE HOT WATER CIRC
MVAC-E	MEDICAL VACUUM EXHAUST	NPHWC-HT	NON POTABLE HOT WATER CIRC HIGH TEMP
N2	NITROGEN	NPTW	NON POTABLE TEMPERED WATER
N2O	NITROUS OXIDE	NPTWC	NON POTABLE TEMPERED WATER CIRC
O2	OXYGEN	RO	REVERSE OSMOSIS WATER
WAGD	WASTE ANESTHETIC GAS DISPOSAL	TP	TRAP PRIMER
WAGD-E	WASTE ANESTHETIC GAS DISPOSAL EXHAUST	TP-UG	TRAP PRIMER UNDERGROUND

GENERAL SHEET LIST - PLUMBING

SHEET NUMBER	SHEET NAME	SHEET NUMBER	SHEET NAME
P0.01	SCHEDULES - PLUMBING	P2.02	1ST FLOOR - PLUMBING
P0.02	SCHEDULES - PLUMBING	P2.02A	1ST FLOOR SECTOR PLAN - PLUMBING
P0.03	SCHEDULES - PLUMBING	P2.02B	1ST FLOOR SECTOR PLAN - PLUMBING
P1.00	SITE PLAN - PLUMBING	P2.02C	1ST FLOOR SECTOR PLAN - PLUMBING
P1.01	UNDERGROUND - PLUMBING	P2.02D	1ST FLOOR SECTOR PLAN - PLUMBING
P1.01A	UNDERGROUND SECTOR PLAN - PLUMBING	P4.01	DOMESTIC WATER RISER DIAGRAM
P1.01B	UNDERGROUND SECTOR PLAN - PLUMBING	P4.02	WASTE & VENT RISER DIAGRAM
P1.01C	UNDERGROUND SECTOR PLAN - PLUMBING	P4.03	COMPRESSED AIR RISER DIAGRAM
P1.01D	UNDERGROUND SECTOR PLAN - PLUMBING	P6.03	PLUMBING DETAILS

VICINITY MAP:

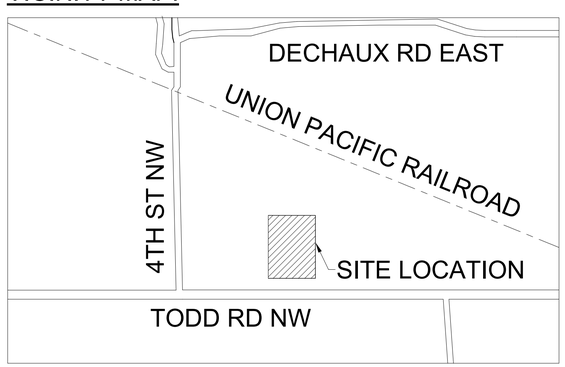

NORTH

10/9/2023 9:43:43 AM

PLUMBING GENERAL NOTES - WASHINGTON

1. THIS PROJECT WAS DESIGNED UNDER THE 2018 EDITION OF THE UNIFORM PLUMBING CODE WITH WASHINGTON STATE AMENDMENTS. MATERIALS, METHODS AND INSTALLATION SHALL COMPLY WITH THESE PROVISIONS.
2. WATER SYSTEM IS DESIGNED PER THE FOLLOWING PARAMETERS AND REQUIREMENTS:
   -STATIC WATER PRESSURE TO FIXTURES SHALL NOT EXCEED 80 PSIG (608.2)
   -DESIGNED MAXIMUM DCW VELOCITIES SHALL NOT EXCEED 8 FPS & DHW SHALL NOT EXCEED 5 FPS (610.6 and 610.12)
   -PRESSURE LOSSES FOR IN-LINE DEVICES HAVE BEEN INCLUDED IN THE ABOVE PRESSURE CALCULATIONS (610.2)
   -WATER SIZING IS AS PER APPENDIX A (Table 103.1)
   -WATER CONNECTIONS TO MECHANICAL EQUIPMENT, STEAM PRODUCING EQUIPMENT, DISHWASHERS THAT INJECT DETERGENT INTO THE WATER LINE, CARBONATORS, OR ANY OTHER CONDITION WHERE A CROSS CONNECTION OF THE MAIN WATER SYSTEM MAY OCCUR, A REDUCED PRESSURE BACKFLOW PREVENTER ASSEMBLY AND ASSOCIATED DRAIN PIPING MUST BE PROVIDED.
   -WATER DISINFECTION TEST SHALL BE PERFORMED IN ACCORDANCE WITH SECTION 609.9 PRIOR TO FINAL APPROVAL OF PLUMBING PERMIT.
   -ALL ITEMS IN THE DOMESTIC WATER DISTRIBUTION SYSTEM MUST SHOW COMPLIANCE WITH NSF-61 LEAD FREE REQUIREMENTS. DOCUMENTATION MUST BE AVAILABLE ON SITE.
   -PROVIDE WATER PIPING IDENTIFICATION ON PIPING PER TABLE 601.3.2.
   -LIMITATION OF HOT WATER TEMPERATURE TO PLUMBING FIXTURES SHALL BE IN ACCORDANCE WITH UPC CHAPTER 4.
3. THESE PLANS ARE SCHEMATIC AND DO NOT SHOW EXACT ROUTING OR EVERY OFFSET WHICH MAY BE REQUIRED. THE PLUMBING CONTRACTOR IS TO COORDINATE WITH ALL OTHER TRADES AND IS TO VERIFY ALL CLEARANCES BEFORE COMMENCING WORK.
4. ALL PIPE SIZES NOTED ON DRAWINGS ARE MINIMUMS.
5. SLOPE ALL RAIN LEADER, STORM, AND WASTE PIPING AT 2% UNLESS OTHERWISE NOTED ON DRAWINGS. OBTAIN APPROVAL FROM CODE AUTHORITY BEFORE INSTALLING WASTE PIPING AT LESS THAN 2% (EVEN IF LESSER SLOPE IS INDICATED ON DRAWINGS).
6. HANGERS AND SUPPORTS FOR PIPING SHALL BE IN ACCORDANCE WITH SECTION 313 AND TABLES 313.3 AND 313.6 OF THE 2018 UNIFORM PLUMBING CODE WITH WASHINGTON STATE AMENDMENTS.
7. PIPING PENETRATIONS OF FIRE RATED WALLS OR FLOORS SHALL BE SLEEVED AND FIRE STOPPED WITH LISTED MATERIALS SO AS TO MAINTAIN THE INTEGRITY AND RATING OF THE FLOOR OR WALL.
8. FOR EXACT ROUGH-IN LOCATIONS AND ELEVATIONS OF PLUMBING FIXTURES REFER TO ARCHITECTURAL DRAWINGS.
9. PROVIDE STOPS OR ANGLE VALVES AT ALL FIXTURES
10. PROVIDE TRAP PRIMERS FOR ALL FLOOR DRAINS.
11. PROVIDE DIELECTRIC CONNECTIONS BETWEEN DISSIMILAR METALS.
12. CLEANOUTS SHALL BE INSTALLED SO THEY ARE EASILY ACCESSIBLE.
13. PLUMBING EQUIPMENT, VALVES AND TRAP PRIMERS SHALL BE LOCATED IN EASILY ACCESSIBLE LOCATIONS, UNLESS SHOWN ON ARCHITECTURAL DRAWINGS, REQUIRED ACCESS PANELS SHALL BE PROVIDED BY THE PLUMBING CONTRACTOR AND INSTALLED BY THE GENERAL CONTRACTOR.
14. FLOORS SHALL SLOPE TO FLOOR DRAINS WHERE DRAINAGE OCCURS ON A REGULAR BASIS. PLUMBER TO COORDINATE WITH GENERAL CONTRACTOR FOR EXACT ELEVATION OF DRAIN. (EXAMPLES TOILET ROOMS, KITCHENS AND LAUNDRY ROOMS)
15. THE PLUMBER SHALL PROVIDE AND LOCATE ALL REQUIRED FLOOR, WALL, AND FOOTING SLEEVES.
16. HEAT TRACING OF PIPING, WHERE INDICATED, SHALL BE PROVIDED AND INSTALLED BY THE PLUMBING CONTRACTOR. THE PLUMBING CONTRACTOR IS TO COORDINATE THE HEAT TRACE WIRING SUPPLY WITH THE ELECTRICAL CONTRACTOR.
17. TRENCHING, BACKFILLING, AND COMPACTING FOR UNDERGROUND PIPING SHALL BE THE RESPONSIBILITY OF THE PLUMBING CONTRACTOR UNLESS STATED OTHERWISE IN CONTRACT DOCUMENTS.
18. PIPING BURIED IN THE SLAB TO HAVE A PROTECTIVE SLEEVE.
19. PROVIDE EARTHQUAKE RESTRAINT FOR PLUMBING PIPING AND EQUIPMENT IN ACCORDANCE WITH SECTION 1613 OF THE 2018 IBC AND ASCE 7.
20. VENTS FROM FLOOR MOUNTED FIXTURES SHALL RISE VERTICALLY TO AT LEAST 6" ABOVE THE FLOOD RIM OF THE FIXTURE, UNLESS STRUCTURAL CONDITIONS PROHIBIT A CONTINUOUS VENT. WHERE A "FLAT VENT" IS USED, IT SHALL BE INSTALLED WITH DRAINAGE FITTINGS AND SLOPE BACK TO THE FIXTURE AT STANDARD 2% SLOPE.

PIPING INSULATION SCHEDULE

PIPING TYPE	PIPE SIZE	INSULATION TYPE	INSULATION THICKNESS	CONDUCTIVITY RANGE
COLD WATER OVERHEAD AND EXPOSED TO SIGHT	ALL	FIBERGLASS	1/2"	0.21 - 0.27
COLD WATER WITHIN WALLS	NOT REQUIRED			
HOT WATER AND RECIRC (UP TO 140°F)	1/2" - 1-1/4"	FIBERGLASS	1"	0.21 - 0.28
	1-1/2" - 6"	FIBERGLASS	1-1/2"	0.21 - 0.28
HORIZONTAL COIL CONDENSATE PIPING	ALL	ARMAFLEX	1/2"	

- ALL HOT WATER PIPING INSULATION SHALL MEET THE REQUIREMENTS OF THE WASHINGTON STATE ENERGY CODE, 2018 EDITION, TABLE C403.10.3
- ALL PIPING INSULATION AND COVERINGS SHALL HAVE AN ASTM FLAME SPREAD RATING OF 25 OR LESS AND AN ASTM SMOKE DEVELOPED RATING OF 50 OR LESS.
- ELASTOMERIC INSULATIONS WHICH MEET THESE RATINGS MAY BE USED AS A SUBSTITUTE FOR FIBERGLASS.
- PROVIDE A COVERING FOR ALL INSULATION EXPOSED TO SIGHT WITHIN THE BUILDING.
- PROVIDE AN INCOMPRESSIBLE INSULATED PAD WITH A MINIMUM THERMAL RESISTANCE OF R-10 UNDER ALL ELECTRIC WATER HEATERS IN UNCONDITIONED SPACES OR ON CONCRETE FLOOR.

PLUMBING PIPING MATERIAL SCHEDULE

LOCATION	PIPING	SIZE	MATERIAL (FOOTNOTE)	JOINT
UNDERGROUND	DOMESTIC COLD WATER	2-1/2" AND LARGER	316L STAINLESS STEEL SCH 10 (e)	WELDED/GROOVED VIC
	SANITARY WASTE	1-1/2" TO 4"	PVC DWV SCH 40	2 STEP SOLVENT WELD
	SANITARY VENT	1-1/2" TO 4"	PVC DWV SCH 40 FOAM CORE	2 STEP SOLVENT WELD
	NATURAL GAS	1/2" TO LARGER	HDPE (j)	MFR APPROVED
	COMPRESSED AIR	ALL	HDPE SDR 13.5 (j)	MFR APPROVED
	TRAP PRIMER	1/2"	PEX (d)	MFR APPROVED
ABOVE GROUND	DOMESTIC WATER	1/2" TO 2"	COPPER TYPE L (c)	PRESSED MECH JOINT
	DOMESTIC WATER	2-1/2" AND LARGER	304L STAINLESS STEEL SCH 10 (e)	WELDED/GROOVED VIC
	SANITARY WASTE	1-1/2" TO 4"	PVC DWV SCH 40 FOAM CORE (h, i, o)	2 STEP SOLVENT WELD
	SANITARY VENT	1-1/2" TO 4"	CAST IRON (g, i, n)	NO HUB
	NATURAL GAS	1/2" TO 4"	BS ERW SCH 40	MEGA-PRESS "G"
	COMPRESSED AIR	ALL	ASTM B 819 COPPER TYPE L	FOOTNOTE (q)
	INDIRECT WASTE	1/2" TO 2"	PVC DWV SCH 40 FOAM CORE	2 STEP SOLVENT WELD
	TRAP PRIMER	1/2"	COPPER TYPE L (c)	PRESSED MECH JOINT

FOOTNOTES:

(a) ACCEPTABLE FOR PLENUM USE IN SIZES 1/2" THROUGH 1".
(b) PIPE SHALL BE SUPPORTED IN CHANNEL IN ACCORDANCE WITH THE PEX MANUFACTURERS INSTALLATION INSTRUCTIONS. (CHANNEL SUPPORT NOT REQUIRED FOR VERTICAL PIPING, PIPING INSIDE WALLS, OR PLUMBING CHASES)
(c) PRESSURE LIMIT OF 200 PSI
(d) LIMITED TO 80 PSI @ 200° F
(e) AT THE INSTALLERS' DISCRETION, WELDED OR GROOVED FIELD JOINTS MAY BE USED (USE 316L STAINLESS STEEL COUPLINGS FOR UNDERGROUND INSTALLATIONS)
(f) USE SS 316 COUPLINGS
(g) STANDARD NO-HUB BANDS
(h) FOLLOW PROJECT ACCOUSTICAL REQUIREMENTS. (PVC MAY BE USED INSIDE MECHANICAL SPACES & RESTROOM CHASES)
(i) FOLLOW PROJECT & JURISDICTIONAL FLAME / SMOKE SPREAD FIRESTOPPING REQUIREMENTS
(j) ONLY ALLOWED OUTSIDE BUILDING FOOTPRINT
(k) GREASE WASTE PIPING PROVIDED WITH HEAT TRACING MUST BE NO HUB CAST IRON. PROVIDE DRAIN COOLER ASSEMBLY AT LOCATIONS WHERE WASTE DISCHARGE TEMPERATURE IS 120° F OR HIGHER
(l) WELDED GAS PIPING TO BE IN ACCORDANCE WITH THE LOCAL MUNICIPAL CODE, LOCAL FUEL GAS CODE "WELDING", & ASME BOILER & PRESSURE VESSEL CODE SECTION IX.
(n) AT THE INSTALLERS' DISCRETION, 6" & LARGER PVC MAY BE USED FOR VERTICAL STACK INSTALLATIONS (EXCEPT WITHIN PLENUM SPACES & OTHER AREAS LISTED HEREIN WHERE CAST IRON MUST BE USED)
(p) PIPE / FITTING MATERIAL MUST BE PROVIDED AS SCHEDULED, IN ACCORDANCE WITH OWNER STANDARDS.
(q) LAB GAS PIPING, FITTINGS, AND VALVES SHALL BE CLEANED, PROTECTED AND LISTED FOR OXYGEN SERVICE. ALL JOINTS SHALL BE BRAZED USING ANSI/AWS A5.8 COPPER-PHOSPHORUS OR COPPER-PHOSPHORUS-SILVER BRAZING FILLER METAL WITHOUT FLUX. JOINTS SHALL BE PURGED WITH OIL-FREE DRY NITROGEN NF DURING BRAZING AND TESTING.

CONTACT LIST

TITLE	NAME	COMPANY	PHONE #	EMAIL
DESIGN ENGINEER	MICHAEL KELLY	MACDONALD MILLER	206-768-4224	MICHAEL.KELLY@MACMILLER.COM
PROJECT MANAGER	BROCK LEE	MACDONALD MILLER	206-768-3838	BROCK.LEE@MACMILLER.COM
PLUMBING FOREMAN	-	MACDONALD MILLER	-	-

MacDonald-Miller FACILITY SOLUTIONS
17930 Int. Blvd. Suite 120 SeaTac, WA 98188
Phone: 206-763-9400 www.macmiller.com

PRCNC20240216

DAVID L. JACQUES — STATE OF WASHINGTON — REGISTERED — PROFESSIONAL ENGINEER

02/01/2024

DATE:	REVISIONS:
12/08/23	
09/22/23	Permit Set
	100% Design Development

REVIT CLOUD DESCRIPTION:

City of Puyallup
Development & Permitting Services
ISSUED PERMIT
Building | Planning | Engineering | Public Works | Fire | Traffic

PSE - OPERATIONAL TRAINING CENTER
325 TODD ROAD NW
PUYALLUP, WA 98371

PLUMBING SCHEDULES
PLUMBING
100% CD SET

ENGINEER:	LAST REVISED:
MM ENGINEER	1/26/2024
CHECKED BY:	DATE PLOTTED:
D. Jacques	1/26/2024
BIM:	ISSUE DATE:
MM BIM Modeler	1/26/2024
PROJECT NUMBER:	
7222-5111-00	
SHEET NUMBER:	

P0.01

DRS STAMP

Autodesk Docs://7222 - 5111 - PSE North Bend Precon Design/7222r5111_JMKFS_JAMP_PSE-OTC_R22.rvt

GAS FIRED WATER HEATER SCHEDULE

NO.	LOCATION	TYPE	MANUFACTURER & MODEL NO.	INTERNAL STORAGE (GALLONS)	RECOVERY (GPH)	RECOVERY FLOW RATE (GPM)	PRESSURE DROP @ DESIGN FLOW (PSI)	TEMPERATURE RISE (°F)		FUEL						ELECTRICAL			SIZE (INCHES)						OPER WEIGHT (LBS)	NOTES
								EWT-LWT Δ°F	TOTAL °F RISE	TYPE	PRESSURE RANGE	INPUT (MBH)	OUTPUT (MBH)	CONN SIZE	THERMAL EFFICIENCY	HP	VOLTS / PH	FLA	DIA	L	W	H	INLET	OUTLET		
GWH-2	APPLIANCE LAB	STORAGE TANK	RUDD/ RHEEM G75-125	50	67	1	1	50-120	70	NATURAL GAS	4"-13.8" WC	38	36	3/4"	95%	120V/1PH	-	-	27.75	-	-	75.5"	3/4"	3/4"		10
GWH-3	APPLIANCE LAB	STORAGE TANK	AO SMITH GPVL-40	40	67	1	1	50-120	70	NATURAL GAS	4"-13.8" WC	40	38	3/4"	95%	120V/1PH	-	-	27.75	-	-	75.5"	3/4"	3/4"		
GWH-4	APPLIANCE LAB	STORAGE TANK	RHEEM PROG50-38U RH62 EC1	40	67	1	1	50-120	70	NATURAL GAS	4"-13.8" WC	38	36	3/4"	95%	120V/1PH	-	-	27.75	-	-	75.5"	3/4"	3/4"		
GWH-5	APPLIANCE LAB	STORAGE TANK	GE GG40S12BXR	40	67	1	1	50-120	70	NATURAL GAS	4"-13.8" WC	38	36	3/4"	95%	120V/1PH	-	-	27.75	-	-	75.5"	3/4"	3/4"		
GWH-6	APPLIANCE LAB	STORAGE TANK	BRADFORD WHITE M45036FBN	40	67	1	1	50-120	70	NATURAL GAS	4"-13.8" WC	38	36	3/4"	95%	240V/1PH	-	-	27.75	-	-	75.5"	3/4"	3/4"		10
GWH-7	APPLIANCE LAB	STORAGE TANK	GE GG50T10BXR	50	67	1	1	50-120	70	NATURAL GAS	4"-13.8" WC	40	38	3/4"	95%	120V/1PH	-	-	27.75	-	-	75.5"	3/4"	3/4"		
GWH-8	APPLIANCE LAB	STORAGE TANK	RHEEM 42vr50-40F	40	67	1	1	50-120	70	NATURAL GAS	4"-13.8" WC	38	36	3/4"	95%	120V/1PH	-	-	27.75	-	-	75.5"	3/4"	3/4"		10
GWH-9	APPLIANCE LAB	STORAGE TANK	AO SMITH BTH-120A	60	205	3	1	50-120	70	NATURAL GAS	4"-13.8" WC	120	114	3/4"	95%	120V/1PH	-	-	27.75	-	-	75.5"	3/4"	3/4"		
GWH-10	APPLIANCE LAB	STORAGE TANK	BOSCH 940ES NG	50	67	1	1	50-120	70	NATURAL GAS	4"-13.8" WC	38	36	3/4"	95%	120V/1PH	-	-	27.75	-	-	75.5"	3/4"	3/4"		
GWH-11	APPLIANCE LAB	STORAGE TANK	RHEEM 21DV50-38	40	67	1	1	50-120	70	NATURAL GAS	4"-13.8" WC	40	38	3/4"	95%	120V/1PH	-	-	27.75	-	-	75.5"	3/4"	3/4"		10
GWH-13	APPLIANCE LAB	STORAGE TANK	AO SMITH GCVL40100	50	67	1	1	50-120	70	NATURAL GAS	4"-13.8" WC	40	38	3/4"	95%	120V/1PH	-	-	27.75	-	-	75.5"	3/4"	3/4"		10
GWH-14	APPLIANCE LAB	STORAGE TANK	RELIANCE 6-50 NBRT	50	204	3	1	50-120	70	NATURAL GAS	4"-13.8" WC	199	189	3/4"	95%	120V/1PH	-	-	27.75	-	-	75.5"	3/4"	3/4"		
GWH-15	APPLIANCE LAB	STORAGE TANK	AO SMITH FSG40248	50	67	1	1	50-120	70	NATURAL GAS	4"-13.8" WC	38	36	3/4"	95%	120V/1PH	-	-	27.75	-	-	75.5"	3/4"	3/4"		10
GWH-16	APPLIANCE LAB	STORAGE TANK	TAKAGI T-H3M-IN-NG	50	67	1	1	50-120	70	NATURAL GAS	4"-13.8" WC	40	38	3/4"	95%	120V/1PH	-	-	27.75	-	-	75.5"	3/4"	3/4"		
GWH-17	APPLIANCE LAB	STORAGE TANK	HTP RT-199	29	53	1	1	50-120	70	NATURAL GAS	4"-13.8" WC	30	29	3/4"	95%	120V/1PH	-	-	27.75	-	-	75.5"	3/4"	3/4"		10
GWH-18	APPLIANCE LAB	TANKLESS	RHEEM PROG40-40N RH67 PV	-	204	3	1	50-120	70	NATURAL GAS	4"-13.8" WC	120	114	3/4"	95%	120V/1PH	-	-	27.75	-	-	75.5"	3/4"	3/4"		
GWH-19	APPLIANCE LAB	TANKLESS	GE PG40T09AVH00	-	339	6	1	50-120	70	NATURAL GAS	4"-13.8" WC	199	189	3/4"	95%	120V/1PH	-	-	27.75	-	-	75.5"	3/4"	3/4"		10
GWH-24	APPLIANCE LAB	TANKLESS	RHEEM PROG29-30U RH63 EC1-1	-	204	3	1	50-120	70	NATURAL GAS	4"-13.8" WC	120	114	3/4"	95%	120V/1PH	-	-	27.75	-	-	75.5"	3/4"	3/4"		
GWH-25	INVENTORY ONLY	STORAGE TANK	STATE PROLINE XE POLARIS GHX-50-199	119	339	6	1	50-120	70	NATURAL GAS	4"-13.8" WC	199	189	3/4"	95%	120V/1PH	-	-	27.75	-	-	75.5"	3/4"	3/4"		10
GWH-26	INVENTORY ONLY	STORAGE TANK	LOCHINVAR AWN200PM	119	339	6	1	50-120	70	NATURAL GAS	4"-13.8" WC	199	189	3/4"	95%	120V/1PH	-	-	27.75	-	-	75.5"	3/4"	3/4"		10

NOTES:
1. STAINLESS STEEL HEAT EXCHANGER; LOW NOx; ASME LISTED; 1" GAS CONNECTION; SEALED COMBUSTION WITH AL29-4C SS 6"DIA VENT & 6"DIA COMBUSTION AIR INLET; 30:1 TURNDOWN RATIO.
2. PROVIDE WITH P&T RV, CONDENSATE NEUTRALIZING ASSEMBLY, EXTERIOR INSULATION JACKET & ALARM CONTACTS WIRED TO BAS.
3. HEAT EXCHANGER INCLUDED. 160 PSI MAX PRESSURE, P&T RV SET AT 150 PSI. PROVIDE 3/4" JJM, JM-20 CLEAR OR EQUAL CONDENSATE NEUTRALIZATION KIT.
4. ASME CSD-1 GAS TRAIN INCLUDED W/ BOILER. BOILER TO MODULATE TO 25% OF FULL FIRE. PROVIDED W/ UNIT MOUNTED CONTROLS, PUMP START/STOP, & LOW WATER CUTOUT. MINIMUM INLET TEMP CONTROL REQUIRED. TEMP SENSOR PROVIDED W/ BOILER, INSTALLED BY CONTROLS CONTRACTOR. CONTROL WIRING, ENABLE HARDWIRED CONTACT & GENERAL ALARM HARDWIRED CONTACT BY CONTROLS CONTRACTOR.
5. 12" DIA COMB AIR MAKE-UP INLET SIZE. 10" DIA DIRECT VENT, POSITIVE PRESSURE CATEGORY IV, UL 1738 SYSTEM EHXAUST FLUE REQUIRED. EXHAUST FLUE WALL OUTLET WALL CAP PROVIDED W/ BOILER.
6. ELECTRICAL TO PROVIDE POWER DISCONNECT.
7. REFER TO DETAIL FOR ADDITIONAL INFORMATION.
8. BOLT BOILER TO CONCRETE PAD, USE MASON SLAB ANCHOR BOLTS (6) 3/8" DIAM W/ 2 5/8" EMBEDMENT
9. MANUAL SHUTDOWN OF POWER TO BURNER CONTROLS REQUIRED PER ASME CDS-1-1998. REMOTE SHUTDOWN VIA SWITCH OR CIRCUIT BREAKER REQUIRED OUTSIDE EACH BOILER ROOM DOOR, BY ELECTRICAL...
10. EXISTING WATER HEATER BY PSE, RELOCATED FROM EXISTING PSE FACILITY.

AIR COMPRESSOR SCHEDULE

NO.	SERVICE	LOCATION	TYPE	CONTROL	COMPRESSOR QUANTITY	MANUFACTURER & MODEL NO.	CAPACITY (SYSTEM)			ELECTRICAL (SYSTEM)					SYSTEM BTUH / HR	RECEIVER (GALLONS)	WEIGHT (LBS)	SIZE	SOUND (dBa)	MIN AIR QUALITY AT DISCHARGE	NOTES
							COMPRESSOR (SCFM)	SYSTEM (SCFM)	PSIG	VOLTS/PHASE	HP	FLA	POWER TYPE	SCCR (MINIMUM)							
AC-1	COMPRESSED AIR	OUTDOOR VILLAGE	ROTARY SCREW, OIL FREE	GEAR DRIVE, CONSTANT SPEED	1	ROGERS KNWA2-AH	908	908	150	480 / 3	200	404	EQUIPMENT BRANCH OF ESSENTIAL ELECTRICAL SYSTEM	-	585,600	400 (WET TANK) 660 (DRY TANK)	10,000	-	-	ISO CLASS 1.4.0	1,2,3,4,5,6,7,8
AC-2	COMPRESSED AIR	OTC MEC RM	RECIPROCATING	BELT DRIVEN, LOCAL	1	QUINCY QT-15	51	51	175	230 / 3	15	-	EQUIPMENT BRANCH OF ESSENTIAL ELECTRICAL SYSTEM	-	-	120	-	-	-	-	1,2,3,4,5,6,8

NOTES:
1. REFER TO COMPRESSED AIR DIAGRAMS & DETAILS FOR ADDITIONAL INFORMATION & EQUIPMENT TO BE PROVIDED.
2. DRYER, FILTER & REGULATOR ASSEMBLY SEPARATE FROM COMPRESSOR PACKAGE. SYSTEM MUST BE COMPLETE WITH VIBRATION ISOLATION, FILTERS, DEWPOINT MONITOR, CONTROLS, ALARMS & ANCILLARY ITEMS AS REQUIRED TO PROVIDE A FULLY OPERATIONAL SYSTEM. SEE DRYER/FILTER/REGULATOR SCHEDULES FOR ADDITIONAL INFORMATION.
3. POWER DISCONNECTS TO BE PROVIDED BY ELECTRICAL. DISCONNECT WITH WIRING TO MFR PROVIDED CONTROL PANEL(S) BY ELECTRICAL.
4. SINGLE-POINT POWER CONNECTION BY ELECTRICAL. REFER TO COMPRESSED AIR DIAGRAMS & DETAILS.
5. PROVIDE FULL SIZE INDIRECT DRAIN PIPING TO FLOOR RECEPTOR(S) WITH APPROVED AIR GAP(S).
6. AMBIENT TEMPERATURE OF COMPRESSOR ROOM/SPACE MUST NOT EXCEED 105 DEGREES F.
7. INCLUDE WEATHERIZATION PACKAGE AND FREEZE PROTECTION FOR ALL DRAIN LINES.
8. PROVIDE SPRING ISOLATION MOUNTS (MASON, SLR, OR EQUAL) SIZED FOR MIN. 1" PIPE AND CONDUIT CONNECTIONS.

COMPRESSED AIR DRYER / FILTER / REGULATOR SCHEDULE

NO.	LOCATION	DRYER ASSEMBLY				CAPACITY						FILTER ASSEMBLY			REGULATOR ASSEMBLY		CONN SIZE	SIZE	WEIGHT (LBS)	NOTES
		AIR COMPRESSOR SYSTEM	TYPE	MANUFACTURER & MODEL NO.	ELECTRICAL VOLTS / PHASE / AMPS	INLET SCFM	PSIG	PURGE CONTROL TYPE/CAPACITY	SCFM AVAILABLE FOR DEMAND DURING PURGE (SCFM)	SUPPLY DEWPOINT (°F)	MAX INLET TEMP (°F)	PRE-FILTER	AFTER-FILTER	AIR QUALITY AT DISCHARGE	TYPE	INLET / OUTLET SCFM				
CAD-1	OUTDOOR TRAINING VILLAGE	COMPRESSED AIR	HEATLESS TWIN-TOWER DESICCANT DRYER/FILTER/REGULATOR SKID WITH INTERNAL PURGE CONTROL SYSTEM	HANKISON HHX-930	460V / 3PH 6A	930	150	AUTO / XXX SCFM	-	-40°F	110°F	.1 MICRON AEROSOL & PARTICULATE, INTEGRAL WITH DRYER ASSEMBLY	.1 MICRON PARTICULATE, INTEGRAL WITH DRYER ASSEMBLY	ISO 8573.1-2010: CLASS 1.4.0	INTEGRAL WITH DRYER ASSEMBLY	90 / 55	1-1/4" IN 1-1/4" OUT	38"W x 21"L x 54" H	431	1, 2, 3, 4

NOTES:
1. REFER TO COMPRESSED AIR DIAGRAMS AND DETAILS FOR ADDITIONAL INFORMATION & EQUIPMENT TO BE PROVIDED.
2. DRYER, FILTER & REGULATOR ASSEMBLY INTEGRAL WITH COMPRESSOR PACKAGE. SYSTEM MUST BE COMPLETE WITH FILTERS, DEWPOINT MONITOR, CONTROLS, ALARMS & ANCILLARY ITEMS AS REQUIRED TO PROVIDE A FULLY OPERATIONAL SYSTEM.
3. POWER DISCONNECTS TO BE PROVIDED BY ELECTRICAL.
4. PROVIDE FULL SIZE INDIRECT DRAIN PIPING TO FLOOR RECEPTOR(S) WITH APPROVED AIR GAP(S).

PUMP SCHEDULE

NO.	TYPE	LOCATION	MFGR & MODEL NUMBER	GPM	MINIMUM SUCTION PRESSURE		BOOST PRESSURE		DISCHARGE PRESSURE		MOTOR (EACH)						WEIGHT (LBS)	POWER TYPE	CAPACITY / REDUNDANCY SCHEME	CONTROLS NOTES	GENERAL NOTES
					FtHd	PSIG	FtHd	PSIG	FtHd	PSIG	HP	RPM	VOLT	PH	VFD	SCCR (MIN)					
WPB-1	DOMESTIC WATER BOOSTER PUMP	WATER SERVICE ENTRY ROOM	GRUNDFOS CMB 10-54 I-U-C-E-D-G	54	105	45	82	35	187	80	2	4000	270	1	EACH PUMP		-	STAND-BY	1 @100%	A	1

CONTROLS NOTES:
A. VARIABLE FREQUENCY DRIVE SYSTEM INTEGRAL TO BOOSTER PUMP PACKAGE. (SINGLE DISCONNECT WITH WIRING TO MFR PROVIDED CONTROL PANEL BY ELECTRICAL). POWER SUPPLY TO ACCOMMODATE SIMULTANEOUS OPERATION OF ALL PUMPS. INCLUDE CONNECTION TO BAS.

GENERAL NOTES:
1. -

1/26/2024 9:43:45 AM

PRCNC20240216

MacDonald-Miller FACILITY SOLUTIONS
17930 Intl. Blvd. Suite.120 SeaTac, WA 98188
Phone: 206-763-9400 www.macmiller.com

DAVID L. JACQUES — STATE OF WASHINGTON — 22567 — REGISTERED PROFESSIONAL ENGINEER

02/01/2024

REVISIONS:	DESCRIPTION:	DATE:
	Permit Set	12/08/23
	100% Design Development	09/22/23

City of Puyallup
Development & Permitting Services
ISSUED PERMIT

Building	Planning
Engineering	Public Works
Fire	Traffic

PSE - OPERATIONAL TRAINING CENTER
325 TODD ROAD NW
PUYALLUP, WA 98371

PLUMBING SCHEDULES
PLUMBING
100% CD SET

ENGINEER: M. Kelly	LAST REVISED: 1/26/2024
CHECKED BY: D. Jacques	DATE PLOTTED: 1/26/2024
BIM: A. Perez	ISSUE DATE: 1/26/2024
PROJECT NUMBER: 7222-5111-00	
SHEET NUMBER: P0.02	

DATE STAMP

Autodesk Docs://7222 - 5111 - PSE North Bend Prepon Design/7222511_MKFS_MAP_PSE-OTC_R22.rvt

FIXTURE CONNECTION SCHEDULE

NO.	FIXTURE	LOCAL CONNECTION			
		WASTE	VENT	HOT	COLD
WC-1	WATER CLOSET - SLOAN (2102459) ST-2459 , WALL MOUNTED FLUSH VALVE, BEMIS 1955CT SEAT LESS COVER, WHITE, SLOAN (3370448) ECOS 8111-1.28-OR BATTERY-POWERED SENSOR OPERATED FLUSHOMETER VALVE 1.28 GALLON PER FLUSH VALVE WITH MANUAL OVERRIDE BUTTON, WATTS ISCA-101-D OR L/R SERIES WALL CARRIER REQUIRED.	4"	2"	-	1"
WC-2	ADA WATER CLOSET - SLOAN (2102459) ST-2459, WALL MOUNTED FLUSH VALVE, ELONGATED, SIPHON JET, MOUNT W/RIM AT 17" AFF, BEMIS 1955CT SEAT LESS COVER, WHITE, SLOAN (3370448) ECOS 8111-1.28-OR BATTERY-POWERED SENSOR OPERATED FLUSHOMETER VALVE 1.28 GALLON PER FLUSH VALVE WITH MANUAL OVERRIDE BUTTON, WATTS ISCA-101-D OR L/R SERIES WALL CARRIER REQUIRED, (FLUSH HANDLE TO POINT TO WIDE PART OF STALL).	4"	2"	-	1"
UR-1	URINAL - SLOAN (1101009) SU-1009 SIPHON JET, WHITE, SLOAN (3250325) ECOS 8186-0.125 BATTERY-POWERED SENSOR OPERATED FLUSHOMETER VALVE 0.125 GALLON PER FLUSH VALVE WITH ELECTRICAL OVERRIDE, (MOUNT W/ RIM 24" AFF).	2"	1 1/2"	-	3/4"
UR-2	ADA URINAL - SLOAN (1101009) SU-1009 SIPHON JET, WHITE, SLOAN (3250325) ECOS 8186-0.125 BATTERY-POWERED SENSOR OPERATED FLUSHOMETER VALVE 0.125 GALLON PER FLUSH VALVE WITH ELECTRICAL OVERRIDE), (MOUNT WITH RIM 17" AFF).	2"	1 1/2"	-	3/4"
L-1	ADA LAVATORY - SLOAN (3873002) SS-3002 COUNTER TOP 4" CENTER LAVATORY, WHITE, SLOAN (3335160) EAF-350-BAT-CP-0.35GPM-MLM-IR-IQ-FCT BATTERY POWERED SENSOR FAUCET, SLOAN (3365468) ETF-312-A-CP VALVE TRIM PLATE, W/ SLOAN (0326045PK) MIX-135-A TEMPERATURE LIMITING DEVICE WITH WALL BRACKET (ASSE 1070 COMPLIANT), DEARBORN 760-1 1 1/4" CP GRID DRAIN, BRASSCRAFT G2CR19 STOPS, FLUIDMASTER B1F20 20" CONNECTORS, 1 1/4" CP 17 GA P-TRAP. (PROVIDE TRUEBRO LAV-GUARD LAVATORY COVER INSULATION KIT #102EZ, WHITE)	1 1/2"	1 1/2"	1/2"	1/2"
L-2	LAVATORY - SLOAN (3873003) SS-3003 WALL HUNG, 20"X18", WHITE, W/STD WALL BRACKET, SLOAN (3335160) EAF-350-BAT-CP-0.35GPM-MLM-IR-IQ-FCT BATTERY POWERED SENSOR FAUCET, SLOAN (3365468) ETF-312-A-CP VALVE TRIM PLATE, W/ SLOAN (0326045PK) MIX-135-A TEMPERATURE LIMITING DEVICE WITH WALL BRACKET (ASSE 1070 COMPLIANT), DEARBORN 760-1 1 1/4" CP GRID DRAIN, BRASSCRAFT G2CR19 STOPS, FLUIDMASTER B1F20 20" CONNECTORS, 1 1/4" CP 17 GA P-TRAP. (PROVIDE TRUEBRO LAV-GUARD LAVATORY COVER INSULATION KIT #102EZ, WHITE)	1 1/2"	1 1/2"	1/2"	1/2"
KS-1	KITCHEN SINK - ELKAY DAYTON DSE12522-3 SELF-RIMMING STAINLESS STEEL SINGLE COMPARTMENT 3 HOLE SINK, W/ELKAY LK1000CR SINGLE HANDLE FAUCET SWING SPOUT, 1.5 GPM, BRASSCRAFT G2CR19 STOPS, FLUIDMASTER B1F20 20" CONNECTORS, 1/2 HP BADGER 5 GARBAGE DISPOSER, 115V/1PH, ELECTRICAL TO PROVIDE SWITCHED RECEPTACLE BELOW SINK. W/ DW-1 DISHWASHER CONNECTION. W/ IH-1 HOT WATER DISPENSER.	2"	1 1/2"	1/2"	1/2"
JS-1	JANITOR SINK - MUSTEE 63M 24x24 MOP BASIN, W/CHICAGO 897-CP SERVICE FAUCET W/WALL BRACKET AND VACUUM BREAKER, MUSTEE 65.700 HOSE & WALL BRACKET.	3"	1 1/2"	1/2"	1/2"
DF-1	ADA DOUBLE WATER COOLER - OASIS PG8SBFSL-STN W/ BOTTLE FILLER, STAINLESS STEEL FINISH, TWO LEVEL, BRASSCRAFT G2CR19 STOP, FLUIDMASTER B6F20 20" CONNECTOR, 1 1/2" PVC P-TRAP, 115 V/1 PHASE, 4.8 FLA, 8.0 GPH. ELECTRICAL TO PROVIDE POWER RECEPTICAL.	1 1/2"	1 1/2"	-	1/2"
SH-1	ADA ROLL-IN SHOWER - AQUATIC MODEL 1603BFSD, WHITE, 62" W X 36.25" D OD, W/GRAB BARS, BARS, FOLD-UP SEAT (SPECIFY RIGHT OR LEFT), SHOWER ROD, SYMMONS 9605-PLR-1.5-L6-X (INCLUDES PRESSURE BALANCE VALVE W/ INSTALLATION BRACKET, INTEGRAL STOPS, DUAL OUTLET DIVERTER BAR, TRIM, 1.5 GPM SHOWER HEAD W/ 36" GLIDE BAR, 60" METAL BRAIDED FLEX HOSE, PUSH BUTTON 1.5 GPM HAND SPRAY, INTEGRAL STOPS, LESS TUB SPOUT), SYMMONS EF-109 INLINE VACUUM BREAKER, OATEY 101BR CP BRASS SHOWER DRAIN.	2"	1 1/2"	1/2"	1/2"
US-1	UTILITY SINK - MUSTEE DURASTONE 17F FLOOR MOUNT LAUNDRY TRAY, W/ MOLDED DRAIN, W/ CHICAGO 891-ABCP FAUCET, BRASSCRAFT G2CR19 STOPS, FLUIDMASTER B1F20 20" CONNECTORS,1 1/2" CP 17 GA P-TRAP.	2"	1 1/2"	1/2"	1/2"
DW-1	DISHWASHER - OWNER FURNISHED, ROUGH-IN AND CONNECT, DEARBORN AIR GAP CD-4P WASTE FITTING WITH FLEXIBLE TUBING CONNECTORS, BRASSCRAFT G2CR19 STOPS, FLUIDMASTER B6W60 FOR A COMPLETE INSTALLATION, APPLIANCE BY OTHERS.	ID	-	1/2"	-
EC-1	EQUIPMENT WATER CONNECTION - SIOUX CHIEF 696-G1010PF OX BOX, SHUT-OFF VALVE IN ABS BOX W/ HAMMER ARRESTOR, WHITE, W/ 1/4" TUBING OUTLET, 1/2" CU TUBE CONNECTION, APPLIANCE AND FINAL CONNECTION BY OTHERS.	-	-	-	1/2"
IH-1	INSTA-HOT - IN-SINK-ERATOR H-CLASSIC-SS HOT WATER DISPENSER,2/3 GALLON TANK, 750 WATTS, 6.25 AMPS, 115 VOLTS, BRASSCRAFT G2CR19 STOP, SET AT 190°F, OPERATING WEIGHT OF 13 LBS. ELECTRICAL TO PROVIDE POWER RECEPTACLE.	-	-	-	3/8"
EFW-1	ADA EMERGENCY EYE AND FACE WASH - HAWS 7610, MOUNTS AT BACK OF SINK, AXION MSR EYE/FACE WASH HEAD, 4.2 GPM, PULL DOWN ACTIVATION. W/ OPTIONAL #9201EFE TEMPERATURE LIMITING DEVICE (ASSE 1071 COMPLIANT).	1 1/2"	1 1/2"	1/2"	1/2"
WH-1	WALL HYDRANT - WOODFORD 17CP, W/ VACUUM BREAKER, FREEZE PROOF, WHEEL HANDLE, VERIFY WALL THICKNESS BEFORE ORDERING.	-	-	-	3/4"

BACKFLOW PREVENTER SCHEDULE

SYMBOL	LOCATION	TYPE	SYSTEM	MANUFACTURER & MODEL NO.	SIZE	AIR GAP MODEL	MAX DESIGN FLOW PRESSURELOSS	WEIGHT (LBS)	NOTES
BFP-2	ICE 135	REDUCED PRESSURE	DOMESTIC WATER	WATTS LF009-QT	1/2"	909AGC	13 PSI @ 3-20 GPM	8	2, 4
BFP-3	FIRE RISER 108	REDUCED PRESSURE	IRRIGATION	WATTS LF009-QT	1-1/2"	909AGC	13 PSI @ 3-20 GPM	8	2, 4

NOTES:

1. PROVIDE WITH PRESSURE DIFFERENTIAL RELIEF VALVE LOCATED BETWEEN TWO INDEPENDENTLY OPERATED SPRING LOADED CHECK VALVES, REPLACEABLE SEATS, SCHEDULE 40 TYPE 304 STAINLESS STEEL HOUSING & SLEEVE, REMOVABLE SEATS, TWO QUARTER TURN BALL VALVES AND FOUR RESILIENT SEATED BALL TEST COCKS, W/ AIR GAP & SPLASH GUARD.
2. PROVIDE WITH PRESSURE DIFFERENTIAL RELIEF VALVE LOCATED BETWEEN TWO INDEPENDENTLY OPERATED SPRING LOADED CHECK VALVES, TWO RESILIENT SEAT BALL VALVES AND FOUR RESILIENT SEATED BALL TEST COCKS, AND A "Y" STRAINER. W/ AIR GAP.
3. STAINLESS STEEL CONSTRUCTION, ASSE 1013 & NSF-61 LISTED.
4. BRONZE CONSTRUCTION, ASSE 1013 & NSF-61 LISTED.

BALANCING VALVE SCHEDULE

UNIT NO.	MANUFACTURER MODEL NO.	VALVE SIZE	GPM	VALVE POSITION	Cv RATING FULL OPEN	PRESSURE DROP IN PSI	NOTES
BV-1	B&G CIRCUIT SETTER PLUS RF-1/2S LF	1/2"	0.50	FIELD SET			2, 4, 5
ABV-1	CIRCUIT SOLVER CSUAS-1/2-115-CV1	1/2"	0.50	FACTORY SET	0.6	.69 (1.60' TDH)	1, 2, 3

NOTES:

1. THREADED CONNECTION.
2. MEETS LOW LEAD CONTENT.
3. INCLUDES FACTORY SUPPLIED STRAINER, CHECK VALVE, (2) SHUT-OFF VALVES AND UNION.
4. SWEAT CONNECTION.
5. INCLUDES FACTORY SUPPLIED CAPPED READOUT VALVES, CHECK VALVES AND DRAIN PORT.

EXPANSION TANK AND HOT WATER STORAGE TANK SCHEDULE

NO.	LOCATION	TYPE	MANUFACTURER & MODEL NO.	STORAGE SIZE (GAL)	ACCEPTANCE (GAL)	WATER CONN	ORIENTATION	DIA	HEIGHT	OPER WT (LBS)	NOTES
EXT-1	MECH RM	DIAPHRAGM EXP TANK	AMTROL ST-12	6.4	3.2	3/4"	VERTICAL	12"	18"	26	4

NOTES:

1. ASME LISTED GLASS LINED TANK RATED AT 125 PSI. ISOLATION VALVE, UNION AND PRESSURE RELIEF VALVE ARE REQUIRED.
2. PROVIDE WITH MANWAY FOR INSPECTION & CLEANING, P&T RV (SET AT XXX PSI) & EXTERNAL INSULATION JACKET.
3. REFER TO DETAIL FOR ADDITIONAL INFORMATION.
4. NON-ASME LISTED TANK RATED AT 150 PSI. SET WORKING PRESSURE EQUAL TO PRESSURE AT WATER HEATER INLET. DO NOT USE AN ISOLATION VALVE OR UNION.
5. ASME LISTED TANK RATED AT 150 PSI. DEEP DRAWN, SET WORKING PRESSURE EQUAL TO PRESSURE AT WATER HEATER INLET. ISOLATION VALVE, UNION AND PRESSURE RELIEF VALVE ARE REQUIRED.

PLUMBING EQUIPMENT SCHEDULE

NO.	EQUIPMENT DESCRIPTION
EV-1	EARTHQUAKE VALVE - CALIFORNIA SEISMIC VALVES - KOSO VALVE MODEL 314, 2" NPT FOR HORIZONTAL INSTALLATION, MANUAL RESET, NATURAL GAS RATED FOR 60 PSI SHUTOFF, SELF CONTAINED.
SA-AA	SHOCK ARRESTOR - SIOUX CHIEF 652-AA, PDI RATED SIZE AA, 1/2" THREADED CONNECTION, SEALED CHAMBER WITH PISTON RATED FOR WALL CLOSURE.
SA-A	SHOCK ARRESTOR - SIOUX CHIEF 652-A, PDI RATED SIZE A, 1/2" THREADED CONNECTION, SEALED CHAMBER WITH PISTON RATED FOR WALL CLOSURE.
SA-B	SHOCK ARRESTOR - SIOUX CHIEF 653-B, PDI RATED SIZE B, 3/4" THREADED CONNECTION, SEALED CHAMBER WITH PISTON RATED FOR WALL CLOSURE.
SA-D	SHOCK ARRESTOR - SIOUX CHIEF 655-D, PDI RATED SIZE D, 1" THREADED CONNECTION, SEALED CHAMBER WITH PISTON RATED FOR WALL CLOSURE.
TP-1	TRAP PRIMER - PRECISION PLUMBING PRODUCTS MODEL MP-500-115V, MINI-PRIME ELECTRONIC TRAP PRIMER, 115 VOLT/1 PHASE, ADJUSTABLE RECYCLE TIMER, SOLENOID OPERATED, WITH AIR GAP. MAX 4 DRAINS. HORIZONTAL LINES SLOPE TO DRAIN. MAX 20' RECOMMENDED. ELECTRICAL TO PROVIDE DISCONNECT.
TP-2	TRAP PRIMER - SIOUX CHIEF TRAPEASE #206096 1-1/2" LAV TAILPIECE TRAP PRIMER, GRAVITY FED, FOR ONE DRAIN.

PUMP SCHEDULE

NO.	TYPE	LOCATION	MANUFACTURER & MODEL NUMBER	GPM	DISCHARGE PRESSURE		DISCHARGE SIZE	MOTOR (EACH)			WT LBS	POWER TYPE	NOTES
					FtHd	PSIG		HP	RPM	VOLT/ PH			
HWC-1	DHW RECIRCULATION	MECH RM	GRUNDFOS UPS 15-35SUC SPEED SETTING 3	6	7	45	3/4"	110 W	-	115/1	10	NORMAL	1,2

NOTES:

1. HOT WATER RETURN SYSTEM. IN-LINE, CLOSE COUPLED, WET ROTOR TYPE, VARIABLE FLOW/PRESSURE. ALL BRONZE OR STAINLESS STEEL CONSTRUCTION.
2. ELECTRONICALLY COMMUTATED MAGNETIC MOTOR. PUMP WIRED TO JUNCTION BOX WITH ON / OFF DISCONNECT (BY ELECTRICAL). PROVIDE WITH 7/24/365 DAY PROGRAMMABLE TIMECLOCK.

MIXING VALVE SCHEDULE

UNIT NO.	LOCATION	MANUFACTURER & MODEL #	TYPE	INLET SIZE	OUTLET SIZE	OUTLET TEMP	GPM RANGE	PSI LOSS	NOTES
MV-1	AT ALL LAVS	WATTS LFUSG-B-M2	THERMOSTATIC	1/2"	1/2"	105°F	0.35-1	-	1, 3
MV-2	MECHANICAL ROOM	LEONARD PNV-150-LF	DIGITAL	1-1/4"	1-1/2"	125°F	5-70	10	2, 3, 5

NOTES:

1. POINT OF USE, ASSE 1070 VALVE. W/ TAMPER RESISTANT LOCKING CAP
2. CIRCULATING SYSTEM REQUIRED. ASSE 1017 VALVE.
3. BRONZE CONSTRUCTION.
4. TAMPER RESISTANT CONTROL ADJUSTMENT.
5. UL LISTED CONTROL BOX W/ 120V PLUG IN POWER SUPPLY W/ 6' CORD INCLUDED.

ELECTRIC WATER HEATER SCHEDULE

NO.	LOCATION	TYPE	MANUFACTURER & MODEL NO.	INTERNAL STORAGE (GALLONS)	RECOVERY (GPH)	RECOVERY FLOW RATE (GPM)	PRESSURE DROP @ DESIGN FLOW (PSI)	TEMP RISE (°F)		OUTLET TEMP (°F)	ELECTRICAL				OPERATING WEIGHT (LBS)	ELEMENT QTY / WATTS	SIZE (INCHES)						NOTES
								SYSTEM EWT-LWT Δ°F	TOTAL °F		KW	THERMAL EFF	FLA	VOLTS / PHASE			DIA	L	W	H	COLD INLET	HOT OUTLET	
EWH-1	OTC MECHANICAL ROOM	STORAGE WATER HEATER	AO SMITH DRE-120	119	72	1.2	1	50-120	70	120	12.3	-	44	277V / 1 PH	1560	(3) 4100	30"	-	-	63"	3/4"	3/4"	1, 2,3, 4

NOTES:

1. UL LISTED.
2. ASME TANK, 150 PSIG STD WORKING PRESSURE.
3. ELECTRICAL TO PROVIDE POWER DISCONNECT.
4. REFER TO DETAIL FOR ADDITIONAL INFORMATION.

HEAT TRACE SCHEDULE

UNIT NO.	PIPING TYPE	HEAT TRACE TEMP	PIPE TYPE	MFR	CABLE MODEL #	CONTROLLER MODEL #	ELECTRICAL VOLT/PH	NOTES
HT-1	OUTDOOR INDIRECT DRAINS AND WATER PIPING	40°F	METAL	RAYCHEM	XL-TRACE 3XLE1-CR	AMC-F5	120/1	1

NOTES:

1. INSULATE ALL HEAT TRACED PIPING PER INSULATION SCHEDULE AND AS SHOWN ON DRAWINGS.
2. WHEN USING PLASTIC PIPE, USE AT-180 ALUMINUM TAPE TO HELP WITH HEAT DISTRIBUTION.

Water Hammer Arresters shall be installed as close as possible to quick-acting valves or, where listed mechanical devices are used, follow the manufacturer's specifications as to location and method of installation.

DRAIN CONNECTION SCHEDULE

NO.	DRAIN DESCRIPTION	LOCAL CONNECTION		
		WASTE	VENT	STORM
FD-1	FLOOR DRAIN - WATTS FD-102P-A5, PUSH-ON, EPOXY COATED CAST IRON BODY W/ ANCHOR FLANGE, W/ 5" ROUND ADJUSTABLE NICKEL BRONZE STRAINER. REVERSIBLE CLAMPING COLLAR W/ WEEPHOLES. WITH TRAP PRIMER.	2"	1 1/2"	-
TD-1	TRENCH DRAIN - WATTS DEAD LEVEL D, PRESLOPED POLYPROPYLENE TRENCH WITH DUCTILE IRON FRAME AND GRATE. 4 SECTIONS, 20 FT LONG.	4"	2"	-
FS-1	FLOOR SINK - WATTS FS-722P-150, 8" ROUND x 6" DEEP, CAST IRON W/A.R.E. INTERIOR & GRATE, 1/2 GRATE, WITH ANTI-SPLASH POLYPROPYLENE BOTTOM DOME STRAINER, INSTALL FLOOD LEVEL RIM FLUSH W/FIN FLR, NO-HUB. WITHOUT TRAP PRIMER.	2"	2"	-
FS-2	FLOOR SINK - WATTS FS-764-150, 12" ROUND x 8" DEEP, CAST IRON WITH A.R.E. INTERIOR & GRATE, 1/2 GRATE AND ANTI-SPLASH POLYPROPYLENE BOTTOM DOME STRAINER. INSTALL FLOOD LEVEL RIM FLUSH WITH FIN FLR. WITHOUT TRAP PRIMER.	4"	2"	-

1/26/2024 9:43:48 AM

MacDonald-Miller FACILITY SOLUTIONS
17330 Intl. Blvd. Suite.120 SeaTac, WA 9818
Phone: 206-763-9400 www.macmiller.com

PRCNC20240216

DAVID L. JACQUES — STATE OF WASHINGTON — 22567 — REGISTERED PROFESSIONAL ENGINEER

02/01/2024

REVISIONS:	DATE:
Permit Set	12/08/23
100% Design Development	09/22/23

REVIT CLOUD DESCRIPTION:

City of Puyallup
Development & Permitting Services
ISSUED PERMIT

Building	Planning
Engineering	Public Works
Fire	Traffic

PSE - OPERATIONAL TRAINING CENTER
325 TODD ROAD NW
PUYALLUP, WA 98371

PLUMBING SCHEDULES
PLUMBING
100% CD SET

ENGINEER: M. Kelly
CHECKED BY: D. Jacques
BIM: A. Perez
PROJECT NUMBER: 7222-5111-00
SHEET NUMBER: P0.03

LAST REVISED: 1/26/2024
DATE PLOTTED: 1/26/2024
ISSUE DATE: 1/26/2024

DRS STAMP

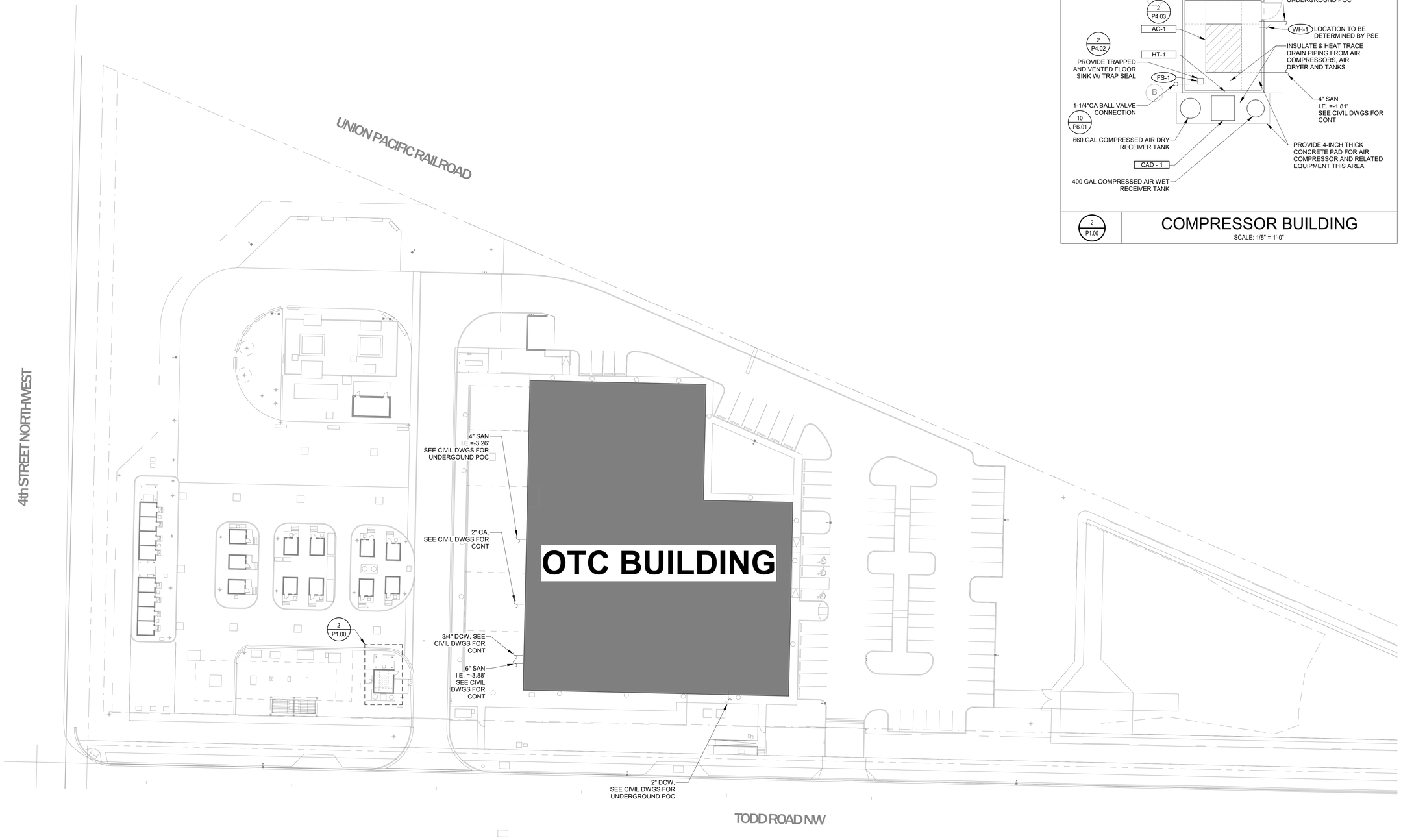

1 SITE PLAN - PLUMBING
SCALE: 1/32" = 1'-0"

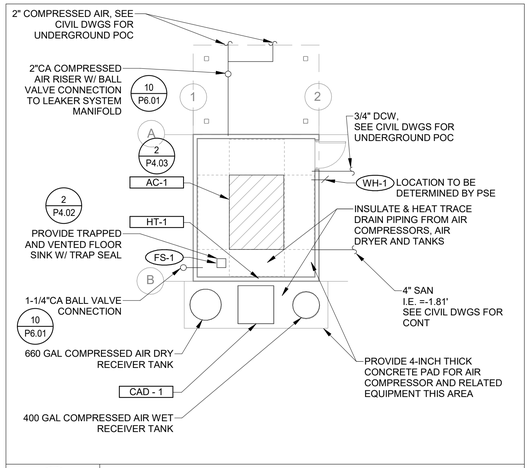

2 P1.00 COMPRESSOR BUILDING
SCALE: 1/8" = 1'-0"

PRCNC20240216

MacDonald-Miller
FACILITY SOLUTIONS
17930 Intl. Blvd. Suite 120 SeaTac, WA 98188
Phone: 206-763-9400 www.macmiller.com

DAVID L. JACQUES
STATE OF WASHINGTON
REGISTERED PROFESSIONAL ENGINEER

02/01/2024

REVISIONS:	REVIT CLOUD DESCRIPTION:	DATE:
	Permit Set	12/08/23
	100% Design Development	09/22/23

City of Puyallup
Development & Permitting Services
ISSUED PERMIT

Building	Planning
Engineering	Public Works
Fire	Traffic

PSE - OPERATIONAL TRAINING CENTER
325 TODD ROAD NW
PUYALLUP, WA 98371

SITE PLAN - PLUMBING
PLUMBING
100% CD SET

ENGINEER: M. Kelly	LAST REVISED: 1/26/2024
CHECKED BY: D. Jacques	DATE PLOTTED: 1/26/2024
BIM: A. Perez	ISSUE DATE: 1/26/2024

PROJECT NUMBER: 7222-5111-00
SHEET NUMBER:
P1.00

Autodesk Docs://7222 - 5111 - PSE North Bend Prescon Design/7222x5111_JAMES_MAP_PSE-OTC_R22.rvt

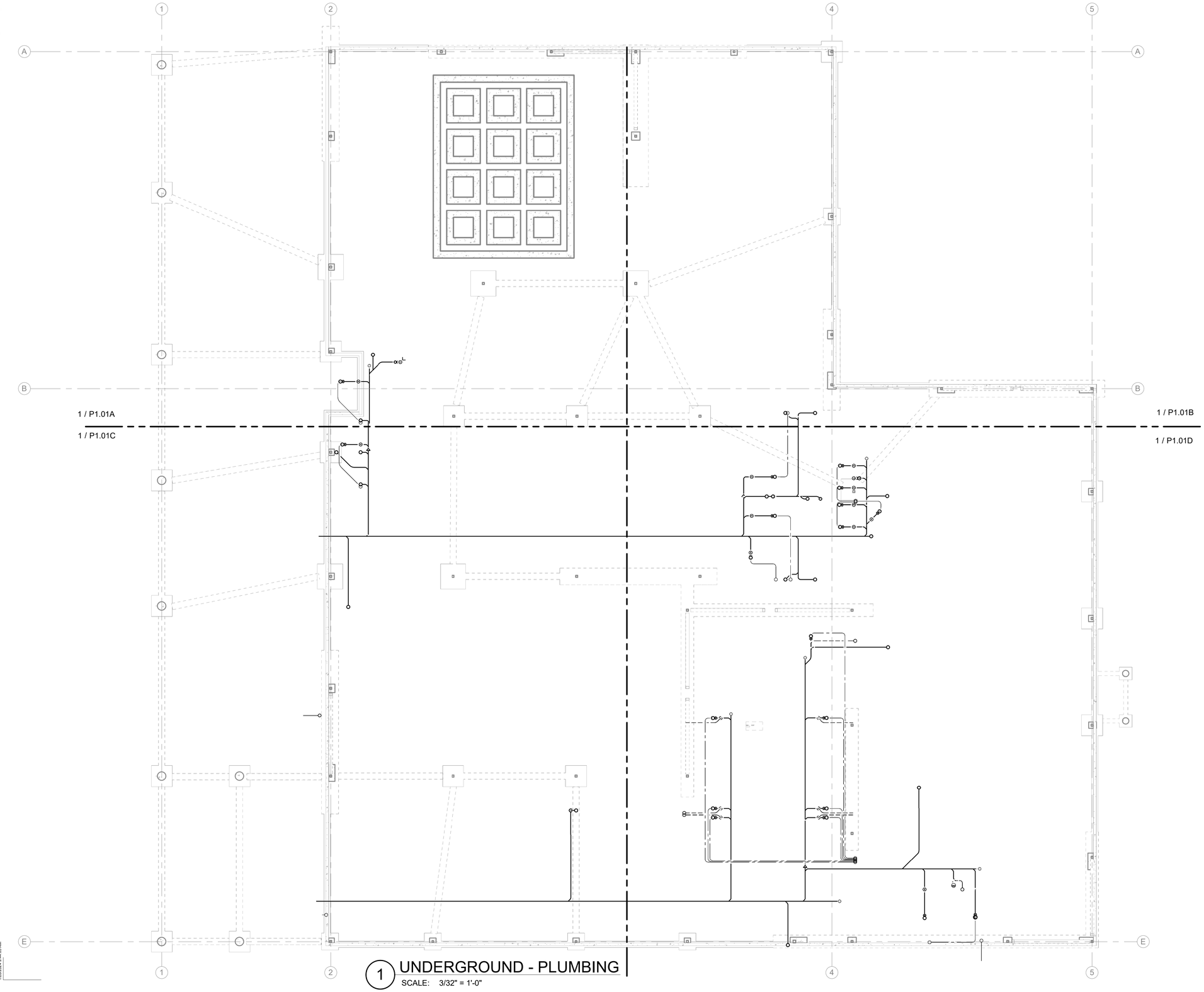

1 UNDERGROUND - PLUMBING
SCALE: 3/32" = 1'-0"

1/26/2024 9:44:03 AM

PRCNC20240216

MacDonald-Miller
FACILITY SOLUTIONS
17330 Intl. Blvd. Suite.120 SeaTac. WA 98188
Phone: 206-763-9400 www.macmiller.com

DAVID L. JACQUES
STATE OF WASHINGTON
REGISTERED
PROFESSIONAL ENGINEER

02/01/2024

DATE:	REVISIONS:
12/08/23	Permit Set
09/22/23	100% Design Development

REVIT CLOUD DESCRIPTION:

City of Puyallup
Development & Permitting Services
ISSUED PERMIT
Building | Planning
Engineering | Public Works
Fire | Traffic

PSE - OPERATIONAL TRAINING CENTER

325 TODD ROAD NW
PUYALLUP, WA 98371

UNDERGROUND - PLUMBING

PLUMBING

100% CD SET

ENGINEER: M. Kelly
CHECKED BY: D. Jacques
BIM: A. Perez
PROJECT NUMBER: 7222-5111-00
SHEET NUMBER: P1.01

LAST REVISED: 1/26/2024
DATE PLOTTED: 1/26/2024
ISSUE DATE: 1/26/2024

KEYPLAN

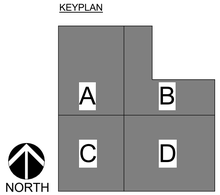

DRS STAMP

PRCNC20240216

City of Puyallup
Development & Permitting Services
ISSUED PERMIT

Building	Planning
Engineering	Public Works
Fire	Traffic

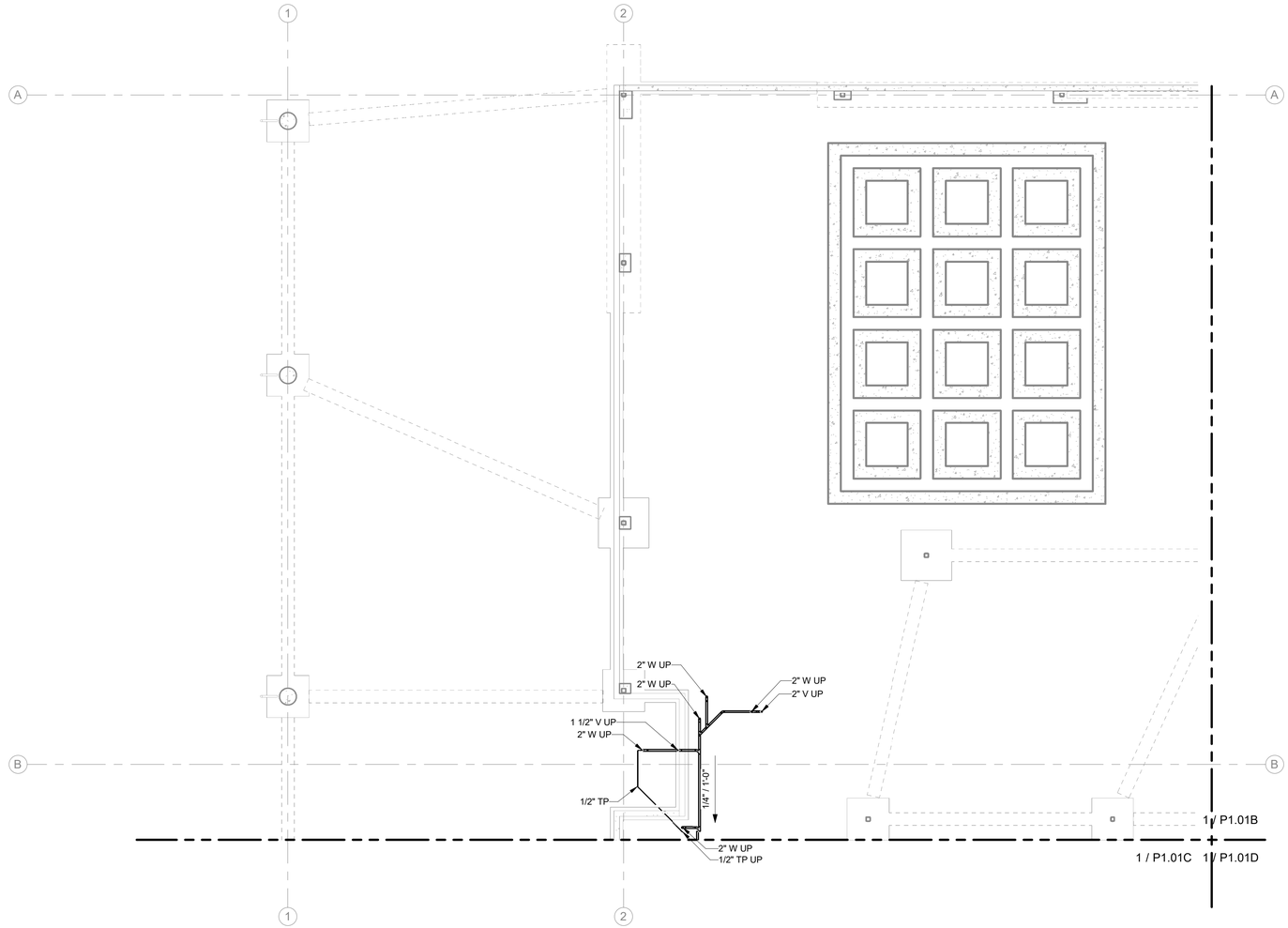

KEYPLAN

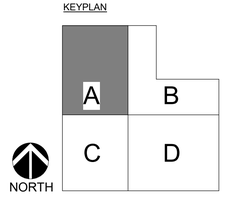

1 UNDERGROUND - PLUMBING - SECTOR A
SCALE: 1/8" = 1'-0"

MacDonald-Miller
FACILITY SOLUTIONS
17930 Intl. Blvd. Suite 120 SeaTac, WA 98188
Phone: 206-763-9400 www.macmiller.com

02/01/2024

REVISIONS:	REVIT CLOUD DESCRIPTION:	DATE:
	Permit Set	12/08/23
	100% Design Development	09/22/23

PSE - OPERATIONAL TRAINING CENTER
325 TODD ROAD NW
PUYALLUP, WA 98371

UNDERGROUND SECTOR PLUMBING
PLUMBING
100% CD SET

ENGINEER: M. Kelly	LAST REVISED: 1/26/2024
CHECKED BY: D. Jacques	DATE PLOTTED: 1/26/2024
BIM: A. Perez	ISSUE DATE: 1/26/2024
PROJECT NUMBER: 7222-5111-00	
SHEET NUMBER: P1.01A	

PRCNC20240216

City of Puyallup
Development & Permitting Services
ISSUED PERMIT

Building	Planning
Engineering	Public Works
Fire	Traffic

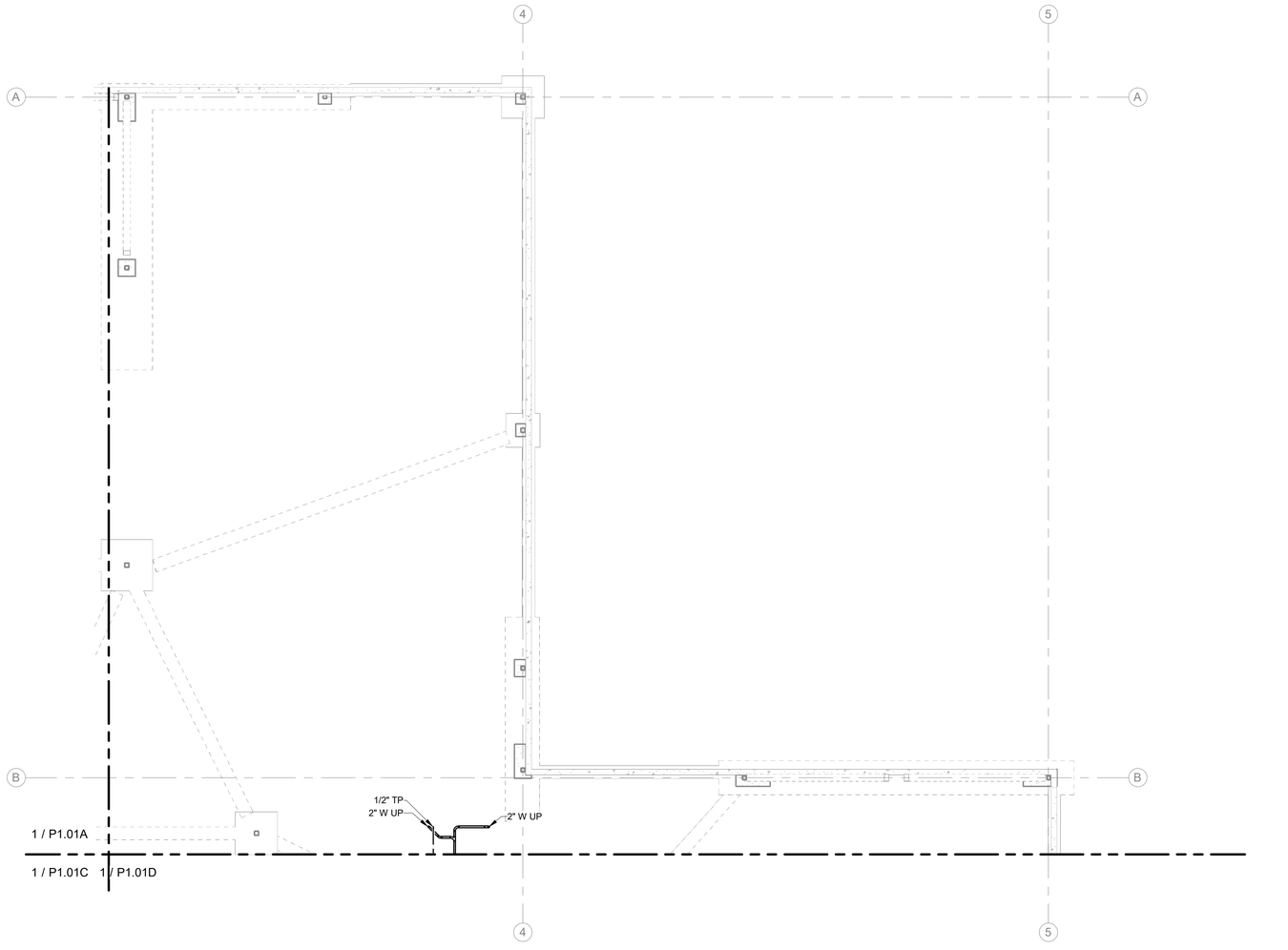

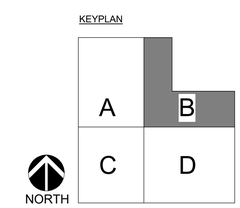

1 UNDERGROUND - PLUMBING - SECTOR B
SCALE: 1/8" = 1'-0"

MacDonald-Miller
FACILITY SOLUTIONS
17930 Intl. Blvd, Suite 120 SeaTac, WA 98188
Phone: 206-763-9400 www.macmiller.com

02/01/2024

REVISIONS:	REVIT CLOUD DESCRIPTION:	DATE:
	Permit Set	12/08/23
	100% Design Development	09/22/23

PSE - OPERATIONAL TRAINING CENTER
325 TODD ROAD NW
PUYALLUP, WA 98371

UNDERGROUND SECTOR PLUMBING
PLUMBING
100% CD SET

ENGINEER: M. Kelly	LAST REVISED: 1/26/2024
CHECKED BY: D. Jacques	DATE PLOTTED: 1/26/2024
BIM: A. Perez	ISSUE DATE: 1/26/2024
PROJECT NUMBER: 7222-5111-00	
SHEET NUMBER: P1.01B	

PRCNC20240216

City of Puyallup
Development & Permitting Services
ISSUED PERMIT

Building	Planning
Engineering	Public Works
Fire	Traffic

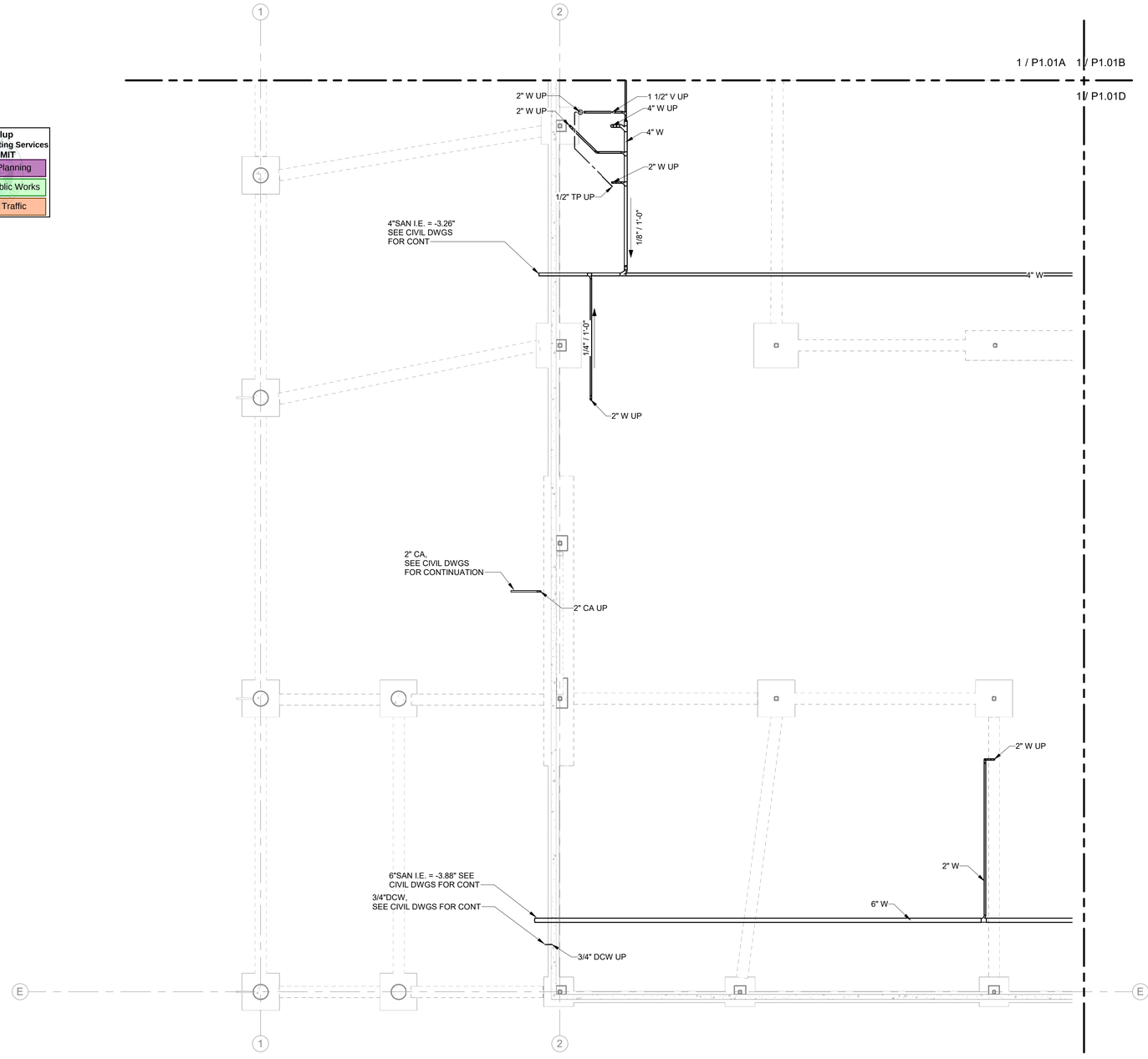

KEYPLAN

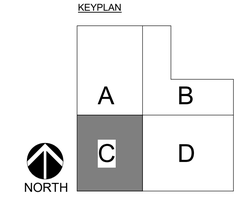

1 UNDERGROUND - PLUMBING - SECTOR C
SCALE: 1/8" = 1'-0"

MacDonald-Miller
FACILITY SOLUTIONS
17930 Intl. Blvd. Suite,120 SeaTac, WA 98188
Phone: 206-763-9400 www.macmiller.com

02/01/2024

REVISIONS:	REVIT CLOUD DESCRIPTION:	DATE:
	Permit Set	12/08/23
	100% Design Development	09/22/23

PSE - OPERATIONAL TRAINING CENTER
325 TODD ROAD NW
PUYALLUP, WA 98371

UNDERGROUND SECTOR PLUMBING
PLUMBING
100% CD SET

ENGINEER: M. Kelly	LAST REVISED: 1/26/2024
CHECKED BY: D. Jacques	DATE PLOTTED: 1/26/2024
BIM: A. Perez	ISSUE DATE: 1/26/2024
PROJECT NUMBER: 7222-5111-00	
SHEET NUMBER: P1.01C	

PRCNC20240216

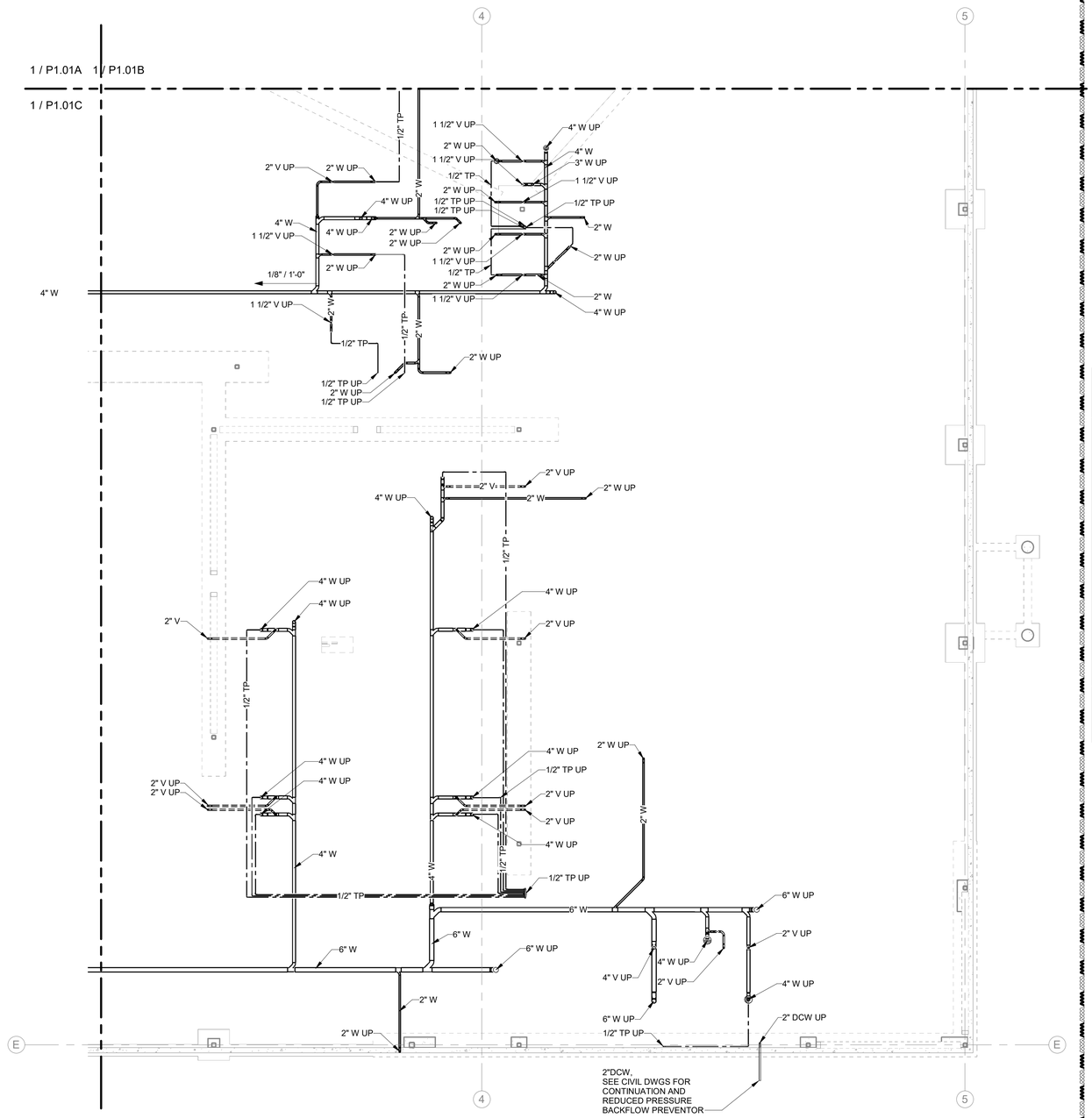

City of Puyallup
Development & Permitting Services
ISSUED PERMIT

Building	Planning
Engineering	Public Works
Fire	Traffic

KEYPLAN

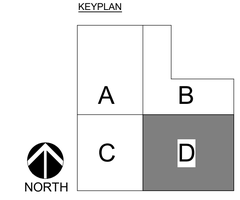

1 UNDERGROUND - PLUMBING - SECTOR D
SCALE: 1/8" = 1'-0"

MacDonald-Miller
FACILITY SOLUTIONS
17930 Intl. Blvd. Suite 120 SeaTac, WA 98188
Phone: 206-763-9400 www.macmiller.com

02/01/2024

REVISIONS:	REVIT CLOUD DESCRIPTION:	DATE:
	Permit Set	12/08/23
	100% Design Development	09/22/23

PSE - OPERATIONAL TRAINING CENTER
325 TODD ROAD NW
PUYALLUP, WA 98371

UNDERGROUND SECTOR PLUMBING
PLUMBING
100% CD SET

ENGINEER: M. Kelly	LAST REVISED: 1/26/2024
CHECKED BY: D. Jacques	DATE PLOTTED: 1/26/2024
BIM: A. Perez	ISSUE DATE: 1/26/2024
PROJECT NUMBER: 7222-5111-00	
SHEET NUMBER: P1.01D	

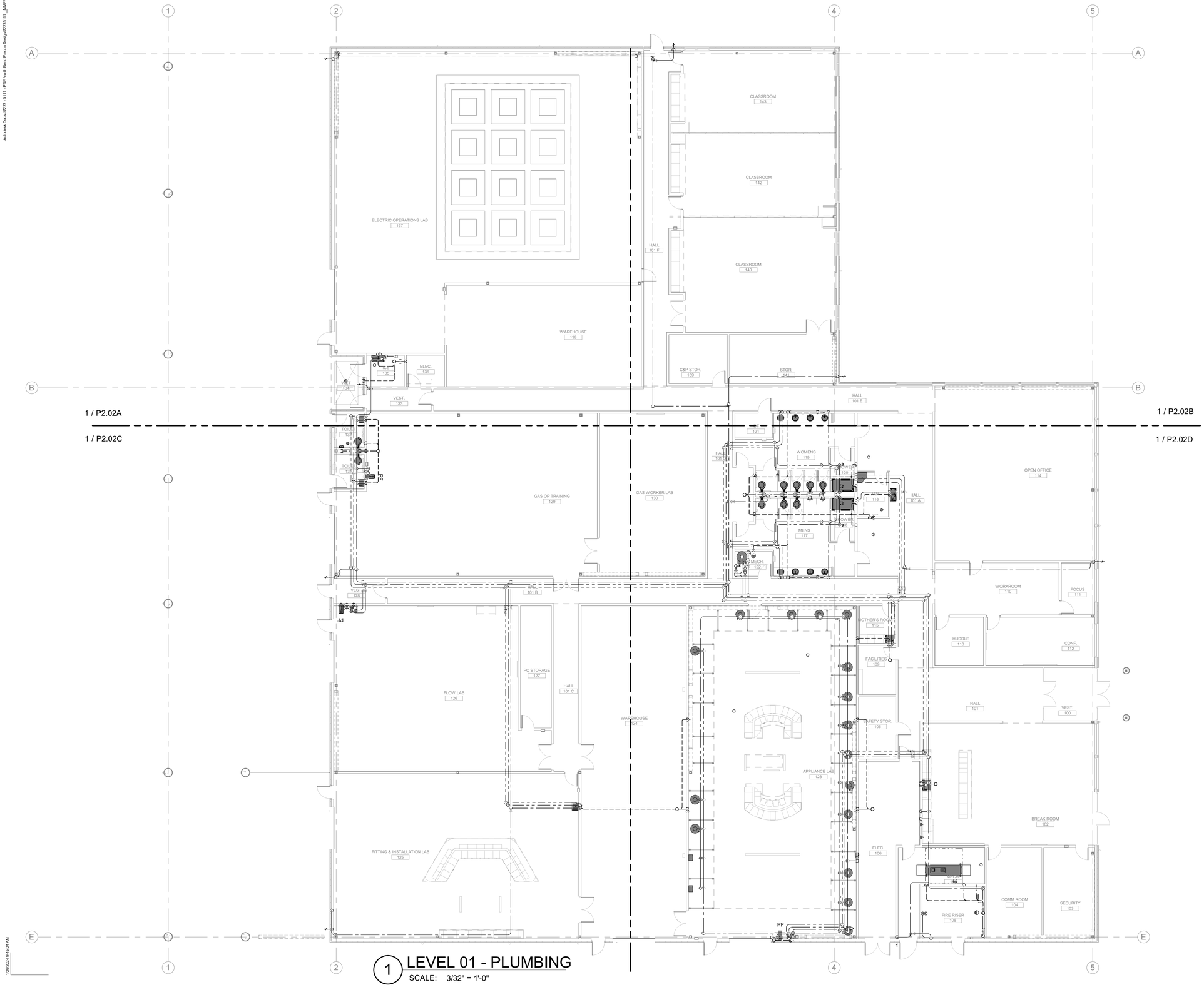

1 LEVEL 01 - PLUMBING
SCALE: 3/32" = 1'-0"

KEYPLAN

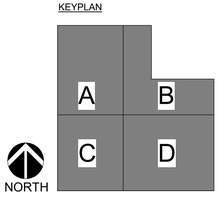

PRCNC20240216

MacDonald-Miller
FACILITY SOLUTIONS
17930 Intl. Blvd, Suite,120 SeaTac, WA 98188
Phone: 206-763-9400 www.macmiller.com

02/01/2024

REVISIONS:	DATE:
Permit Set	12/08/23
100% Design Development	09/22/23

REVIT CLOUD DESCRIPTION:

City of Puyallup
Development & Permitting Services
ISSUED PERMIT

Building	Planning
Engineering	Public Works
Fire	Traffic

PSE - OPERATIONAL TRAINING CENTER

325 TODD ROAD NW
PUYALLUP, WA 98371

1ST FLOOR - PLUMBING
PLUMBING
100% CD SET

ENGINEER: M. Kelly	LAST REVISED: 1/26/2024
CHECKED BY: D. Jacques	DATE PLOTTED: 1/26/2024
BIM: A. Perez	ISSUE DATE: 1/26/2024
PROJECT NUMBER: 7222-5111-00	
SHEET NUMBER: P2.02	

DPD STAMP

PRCNC20240216

SHEET NOTES:

1. 1"CA DROP TO MANIFOLD. FOR EACH MANIFOLD SET PROVIDE ISOLATION VALVE AT EACH BRANCH OF CA ON VERTICAL SECTION W/ ACCESS PANEL AT 4'-0" TO 5'-0" AFF EXPOSED ON WALL.
2. TERMINATE CA PIPING OUT OF WALL AT 1'-0" AFF. TERMINATION TO BE A 1-1/4" WELD X THD FULL PORT BALL VALVE. LOCATE TERMINATION ON LEFT END OF EACH AIR MANIFOLD.

City of Puyallup
Development & Permitting Services
ISSUED PERMIT

Building	Planning
Engineering	Public Works
Fire	Traffic

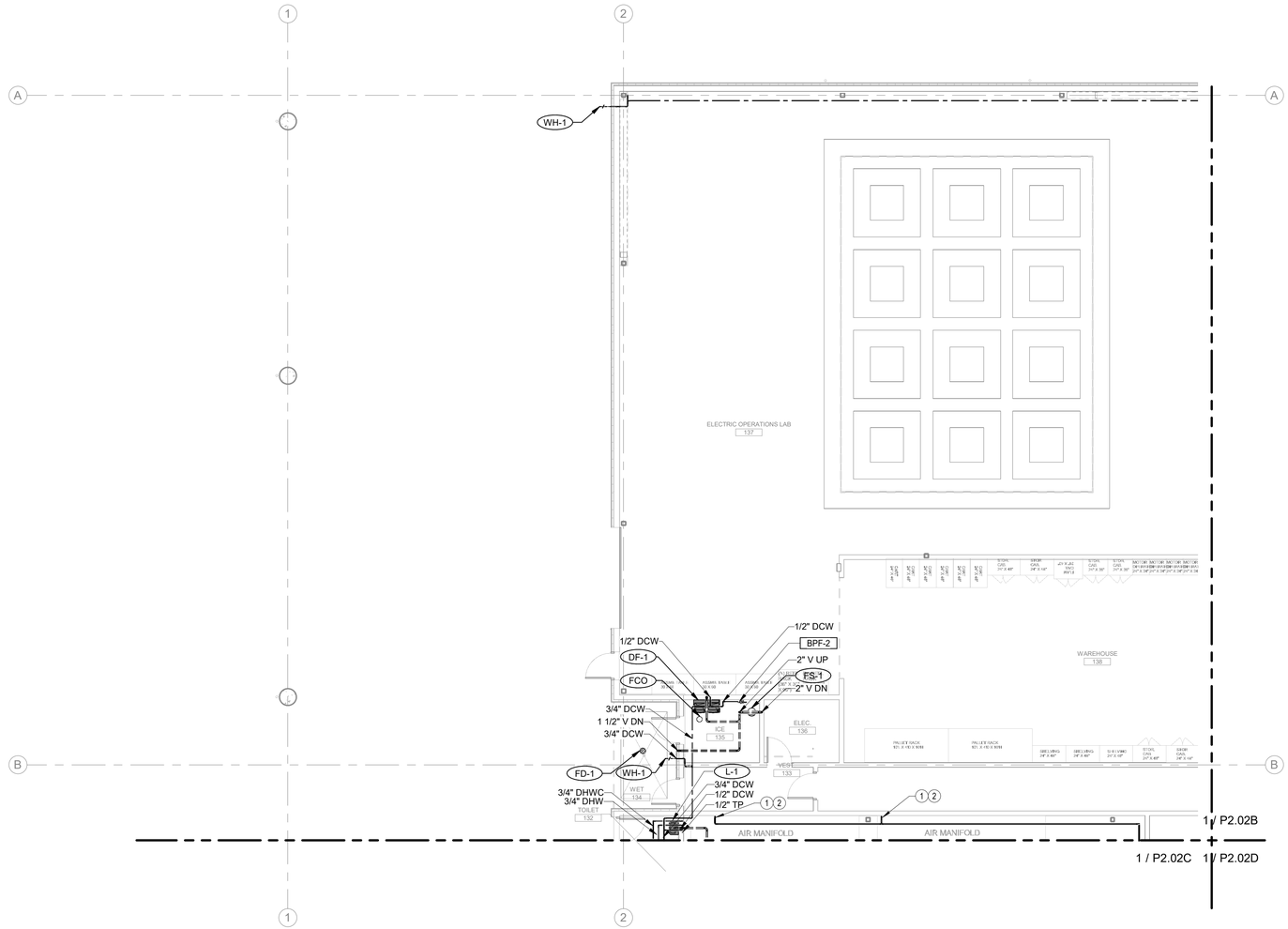

KEYPLAN

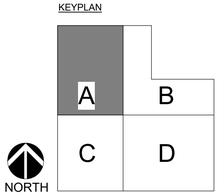

1 LEVEL 1 - PLUMBING - SECTOR A
SCALE: 1/8" = 1'-0"

MacDonald-Miller
FACILITY SOLUTIONS
17930 Intl. Blvd. Suite 120 SeaTac, WA 98188
Phone: 206-763-9400 www.macmiller.com

02/01/2024

REVISIONS:	REVIT CLOUD DESCRIPTION:	DATE:
	Permit Set	12/08/23
	100% Design Development	09/22/23

PSE - OPERATIONAL TRAINING CENTER
325 TODD ROAD NW
PUYALLUP, WA 98371

1ST FLOOR SECTOR PLUMBING
PLUMBING
100% CD SET

ENGINEER: M. Kelly	LAST REVISED: 1/26/2024
CHECKED BY: D. Jacques	DATE PLOTTED: 1/26/2024
BIM: A. Perez	ISSUE DATE: 1/26/2024
PROJECT NUMBER: 7222-5111-00	
SHEET NUMBER: P2.02A	

Autodesk Docs://7222 - 5111 - PSE North Bend Precon Design/7222511 _MMFS _MMP _PSE-OTC _R22.rvt

PRCNC20240216

City of Puyallup
Development & Permitting Services
ISSUED PERMIT
Building | Planning
Engineering | Public Works
Fire | Traffic

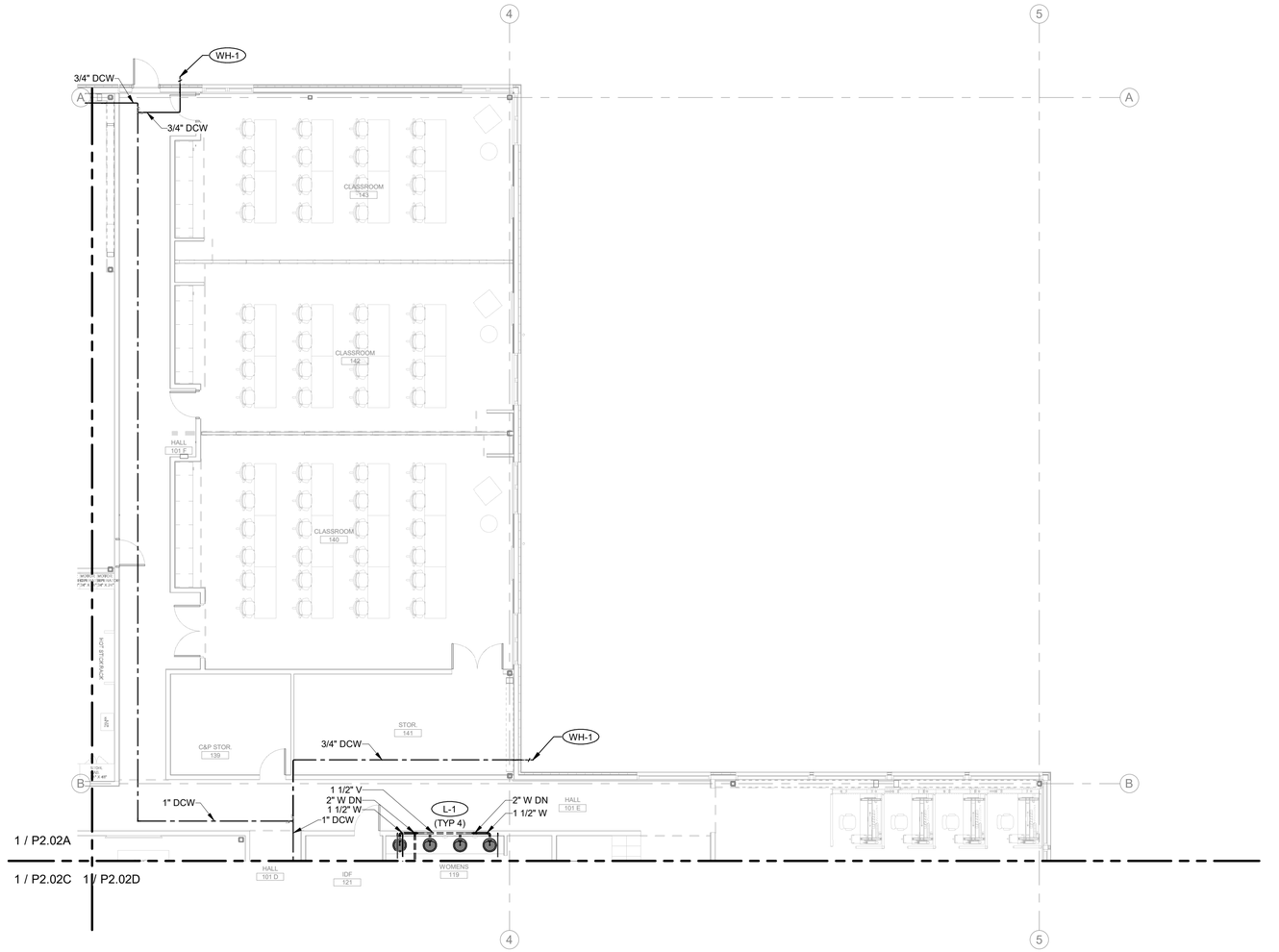

KEYPLAN

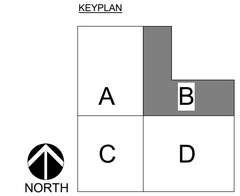

1 LEVEL 1 - PLUMBING - SECTOR B
SCALE: 1/8" = 1'-0"

MacDonald-Miller
FACILITY SOLUTIONS
17930 Intl. Blvd. Suite 120 SeaTac, WA 98188
Phone: 206-763-9400 www.macmiller.com

02/01/2024

REVISIONS:	REVIT CLOUD DESCRIPTION:	DATE:
	Permit Set	12/08/23
	100% Design Development	09/22/23

PSE - OPERATIONAL TRAINING CENTER
325 TODD ROAD NW
PUYALLUP, WA 98371

1ST FLOOR SECTOR PLUMBING
PLUMBING
100% CD SET

ENGINEER: M. Kelly	LAST REVISED: 1/26/2024
CHECKED BY: D. Jacques	DATE PLOTTED: 1/26/2024
BIM: A. Perez	ISSUE DATE: 1/26/2024
PROJECT NUMBER: 7222-5111-00	
SHEET NUMBER: P2.02B	

DPD STAMP

1/26/2024 9:46:05 AM

PRCNC20240216

MacDonald-Miller
FACILITY SOLUTIONS
17930 Intl. Blvd. Suite,120 SeaTac, WA 98188
Phone: 206-763-9400 www.macmiller.com

02/01/2024

City of Puyallup
Development & Permitting Services
ISSUED PERMIT

Building	Planning
Engineering	Public Works
Fire	Traffic

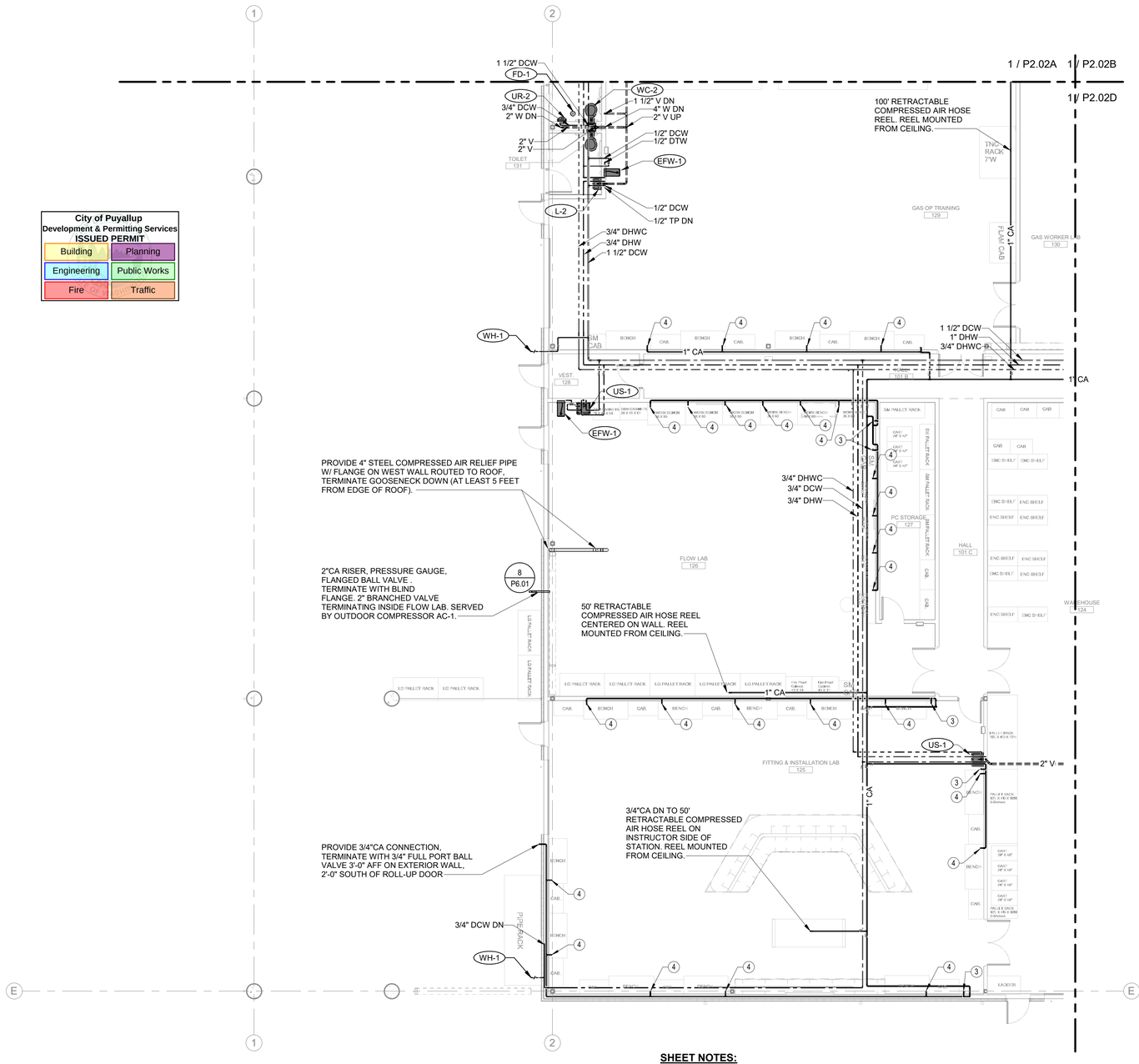

SHEET NOTES:

1. 1"CA DROP TO MANIFOLD. FOR EACH MANIFOLD SET PROVIDE ISOLATION VALVE AT EACH BRANCH OF CA ON VERTICAL SECTION W/ ACCESS PANEL AT 4'-0" TO 5'-0" AFF EXPOSED ON WALL.
2. TERMINATE CA PIPING OUT OF WALL AT 1'-0" AFF. TERMINATION TO BE A 1" FULL PORT BALL VALVE. LOCATE TERMINATION ON LEFT END OF EACH AIR MANIFOLD.
3. MANUAL SHUTOFF VALVE W/ PRESSURE GAUGE EXPOSED ON WALL.
4. ROUTE 1"CA PIPING MANIFOLD IN WALL. 3/4"CA DROP OUT OF WALL WITH 3/4" FULL PORT BALL VALVE AND TRANSITION TO 3/8" BUSHING TO A FLEXIBLE COIL HOSE AND 3/8" QUICK DISCONNECT. ALL PIPING ROUTED IN WALL EXCEPT MANUAL SHUTOFF AND DROPS.

KEYPLAN

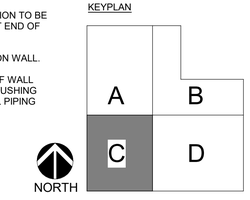

1 LEVEL 1 - PLUMBING - SECTOR C
SCALE: 1/8" = 1'-0"

REVISIONS:	REVIT CLOUD DESCRIPTION:	DATE:
	Permit Set	12/08/23
	100% Design Development	09/22/23

PSE - OPERATIONAL TRAINING CENTER
325 TODD ROAD NW
PUYALLUP, WA 98371

1ST FLOOR SECTOR PLUMBING
PLUMBING
100% CD SET

ENGINEER: M. Kelly	LAST REVISED: 1/26/2024
CHECKED BY: D. Jacques	DATE PLOTTED: 1/26/2024
BIM: A. Perez	ISSUE DATE: 1/26/2024
PROJECT NUMBER: 7222-5111-00	
SHEET NUMBER: P2.02C	

DPD STAMP

Autodesk Docs://7222 - 5111 - PSE North Bend Precon Design/7222511 1_MMFS_MMP_PSE-OTC_R22.rvt
1/26/2024 9:46:44 AM

PRCNC20240216

City of Puyallup
Development & Permitting Services
ISSUED PERMIT

Building	Planning
Engineering	Public Works
Fire	Traffic

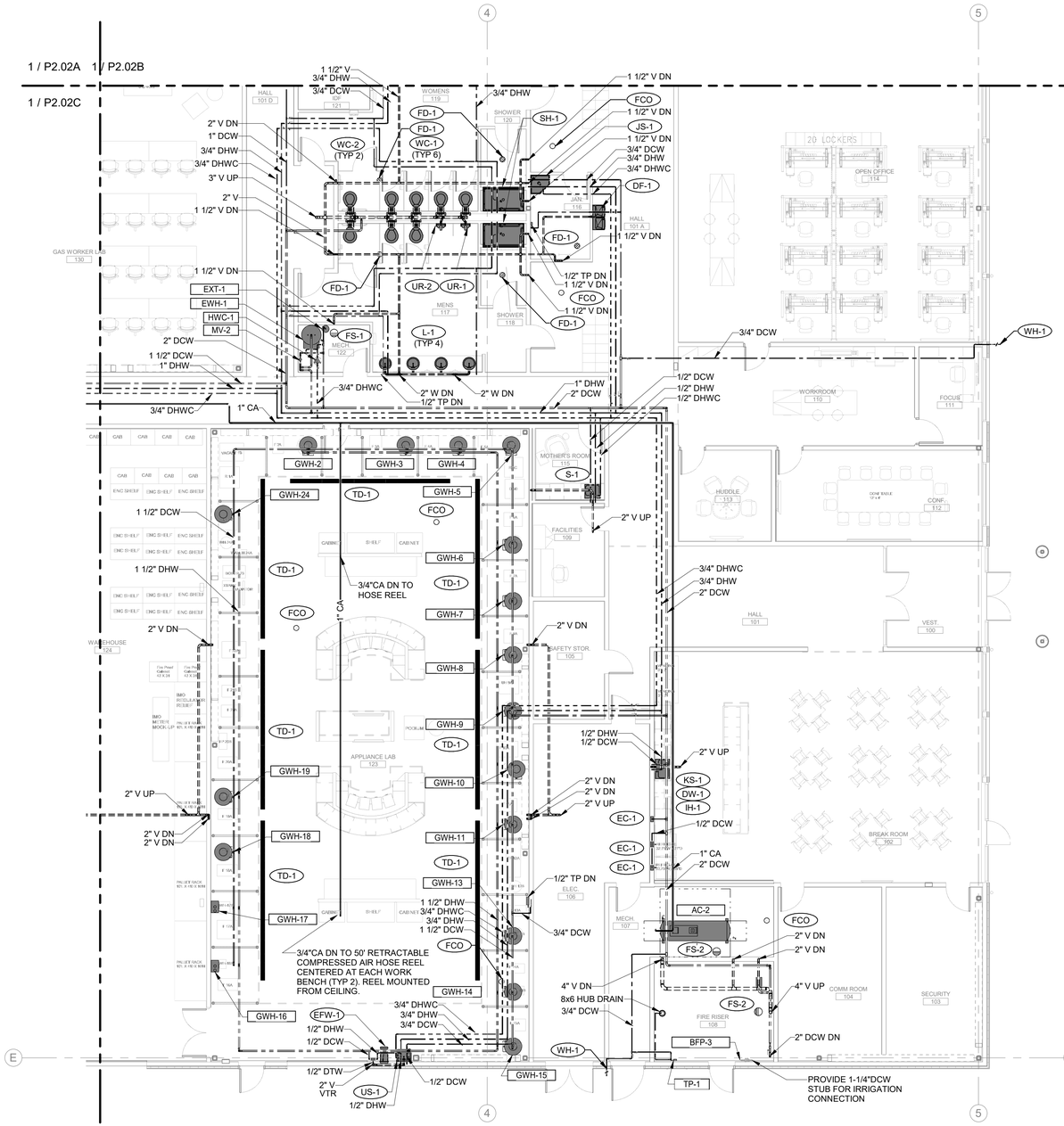

KEYPLAN

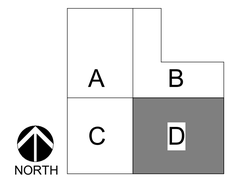

1 LEVEL 1 - PLUMBING - SECTOR D
SCALE: 1/8" = 1'-0"

MacDonald-Miller
FACILITY SOLUTIONS
17930 Intl. Blvd. Suite 120 SeaTac, WA 98188
Phone: 206-763-9400 www.macmiller.com

DAVID L. JACQUES
STATE OF WASHINGTON
REGISTERED PROFESSIONAL ENGINEER

02/01/2024

REVISIONS:	REVIT CLOUD DESCRIPTION:	DATE:
	Permit Set	12/08/23
	100% Design Development	09/22/23

PSE - OPERATIONAL TRAINING CENTER
325 TODD ROAD NW
PUYALLUP, WA 98371

1ST FLOOR SECTOR PLUMBING
PLUMBING
100% CD SET

ENGINEER: M. Kelly	LAST REVISED: 1/26/2024
CHECKED BY: D. Jacques	DATE PLOTTED: 1/26/2024
BIM: A. Perez	ISSUE DATE: 1/26/2024
PROJECT NUMBER: 7222-5111-00	
SHEET NUMBER: P2.02D	

DPG STAMP

Autodesk Docs://7222 - 5111 - PSE North Bend Prepon Design/7222r5111_MMFS_MAP_PSE-OTC_R22.rvt

City of Puyallup
Development & Permitting Services
ISSUED PERMIT
Building | Planning
Engineering | Public Works
Fire | Traffic

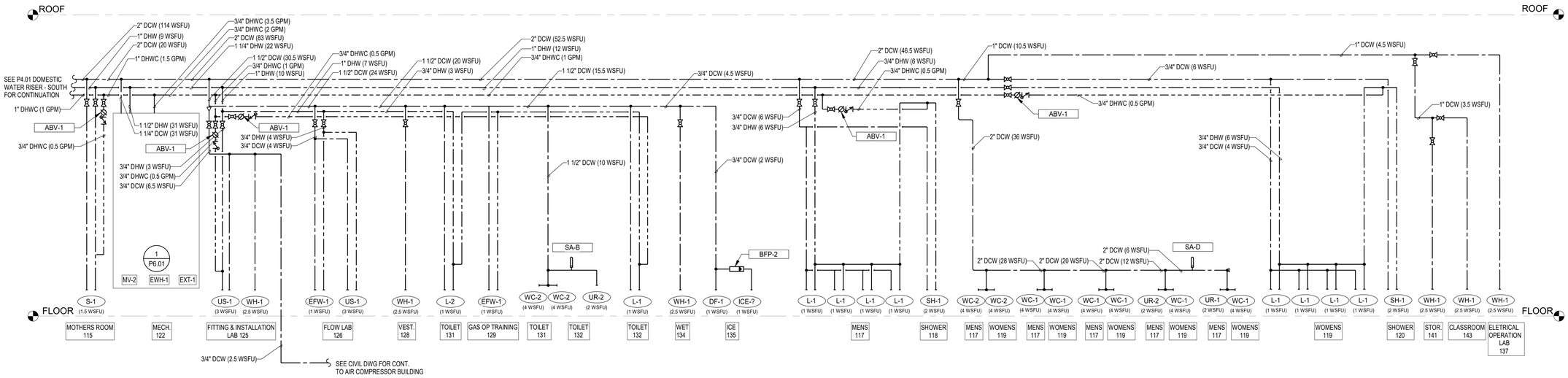

1 P4.01 DOMESTIC WATER RISER - NORTH

SCALE: NTS

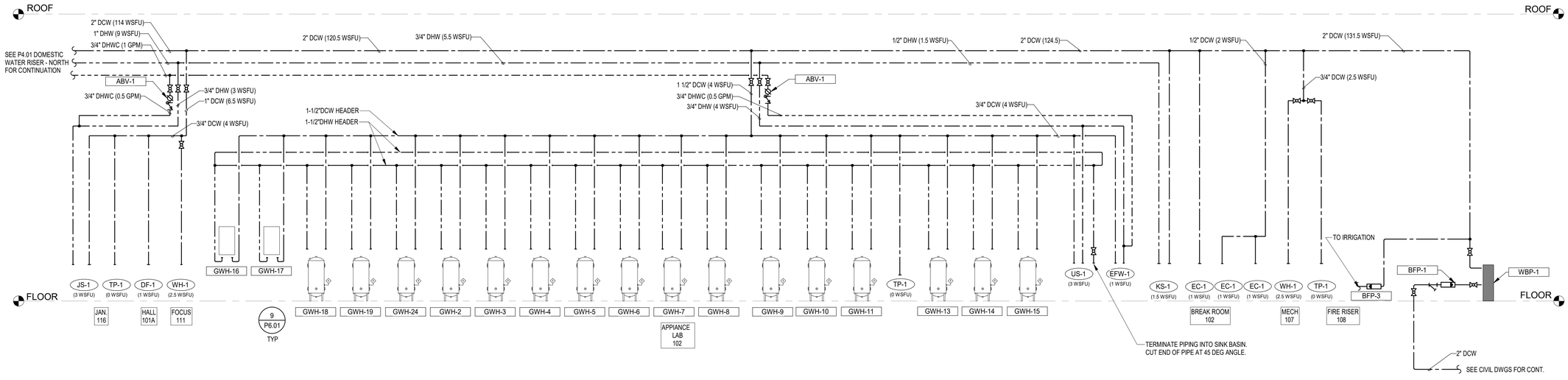

2 P4.01 DOMESTIC WATER RISER - SOUTH

SCALE: NTS

1/26/2024 9:47:34 AM

MacDonald-Miller FACILITY SOLUTIONS
17330 Intl. Blvd. Suite. 120 SeaTac. WA 98188
Phone: 206-763-9400 www.macmiller.com

PRCNC20240216

02/01/2024

REVISIONS:	REVIT CLOUD DESCRIPTION:	DATE:
Permit Set		12/08/23
100% Design Development		09/22/23

PSE - OPERATIONAL TRAINING CENTER
325 TODD ROAD NW
PUYALLUP, WA 98371

DOMESTIC WATER RISER DIAGRAM
PLUMBING
100% CD SET

ENGINEER: M. Kelly	LAST REVISED: 1/26/2024
CHECKED BY: D. Jacques	DATE PLOTTED: 1/26/2024
BIM: A. Perez	ISSUE DATE: 1/26/2024
PROJECT NUMBER: 7222-5111-00	
SHEET NUMBER: P4.01	

DATE IS STAMP

PRCNC20240216

City of Puyallup
Development & Permitting Services
ISSUED PERMIT

Building	Planning
Engineering	Public Works
Fire	Traffic

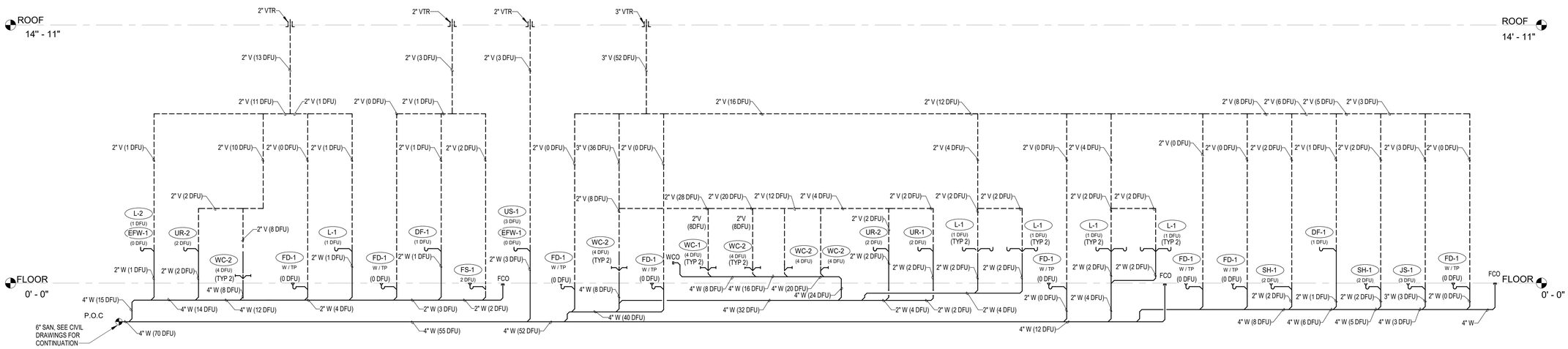

1 P4.02 WASTE AND VENT RISER - NORTH
SCALE: NTS

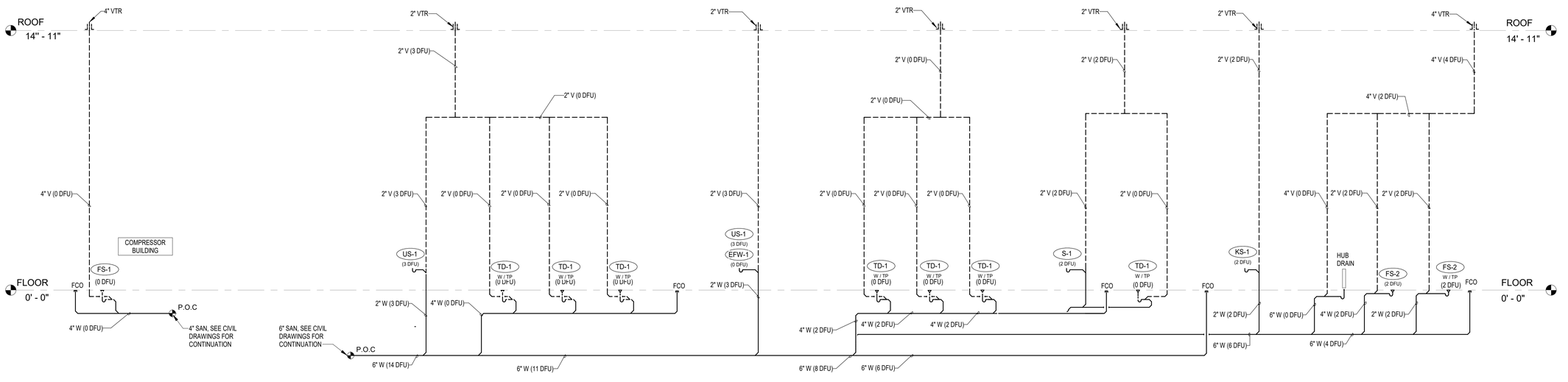

2 P4.02 WASTE AND VENT RISER - SOUTH
SCALE: NTS

MacDonald-Miller
FACILITY SOLUTIONS
17930 Intl. Blvd. Suite 120 SeaTac, WA 98188
Phone: 206-763-9400 www.macmiller.com

02/01/2024

REVISIONS:	REVIT CLOUD DESCRIPTION:	DATE:
	Permit Set	12/08/23
	100% Design Development	09/22/23

PSE - OPERATIONAL TRAINING CENTER
325 TODD ROAD NW
PUYALLUP, WA 98371

WASTE & VENT RISER DIAGRAM
PLUMBING
100% CD SET

ENGINEER: M. Kelly	LAST REVISED: 1/26/2024
CHECKED BY: D. Jacques	DATE PLOTTED: 1/26/2024
BIM: A. Perez	ISSUE DATE: 1/26/2024
PROJECT NUMBER: 7222-5111-00	
SHEET NUMBER: P4.02	

PRCNC20240216

City of Puyallup
Development & Permitting Services
ISSUED PERMIT

Building	Planning
Engineering	Public Works
Fire	Traffic

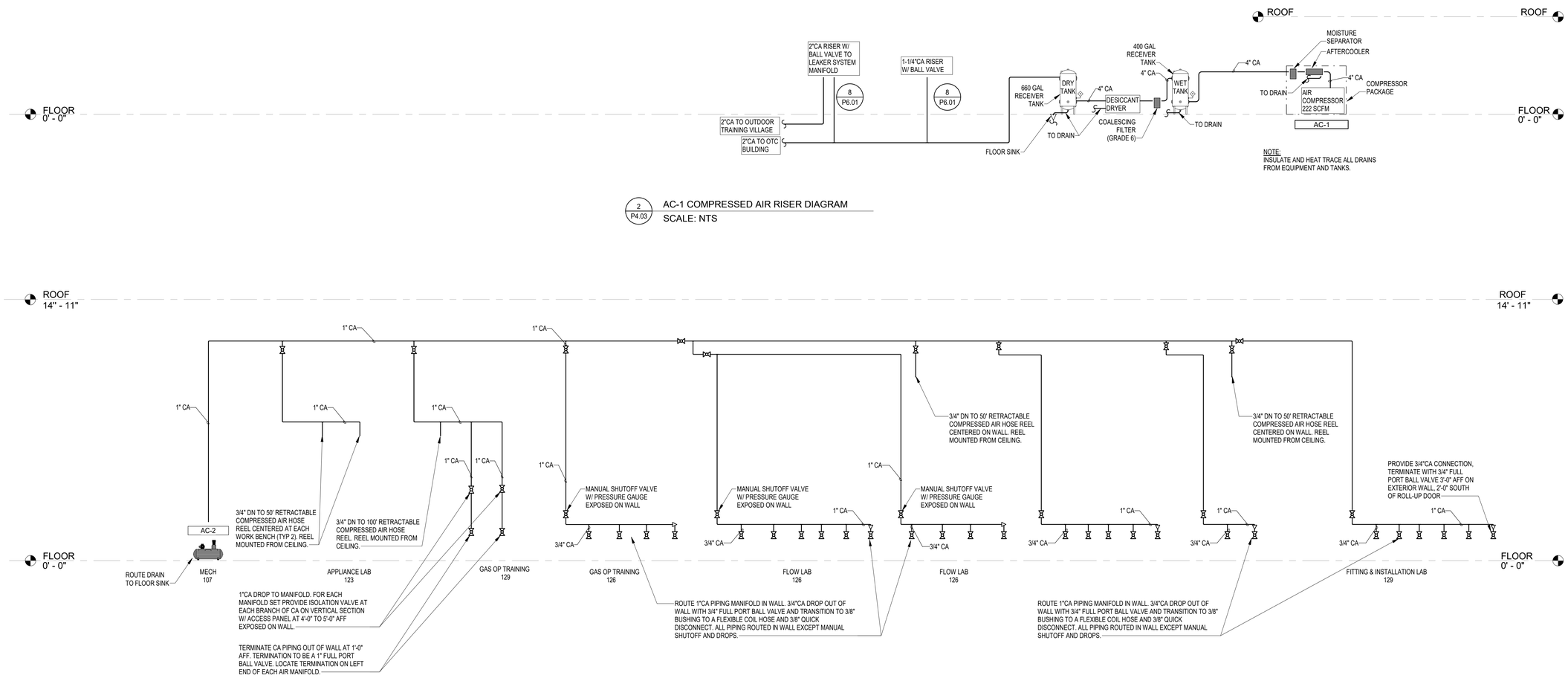

2 P4.03 AC-1 COMPRESSED AIR RISER DIAGRAM
SCALE: NTS

1 P4.03 AC-2 COMPRESSED AIR RISER DIAGRAM
SCALE: NTS

MacDonald-Miller
FACILITY SOLUTIONS
17930 Intl. Blvd. Suite,120 SeaTac, WA 98188
Phone: 206-763-9400 www.macmiller.com

02/01/2024

REVISIONS:	REVIT CLOUD DESCRIPTION:	DATE:
	Permit Set	12/08/23
	100% Design Development	09/22/23

PSE - OPERATIONAL TRAINING CENTER
325 TODD ROAD NW
PUYALLUP, WA 98371

COMPRESSED AIR RISER DIAGRAM
PLUMBING
100% CD SET

ENGINEER: M. Kelly	LAST REVISED: 1/26/2024
CHECKED BY: D. Jacques	DATE PLOTTED: 1/26/2024
BIM: A. Perez	ISSUE DATE: 1/26/2024
PROJECT NUMBER: 7222-5111-00	
SHEET NUMBER: P4.03	

DPD STAMP

Autodesk Docs://7222 - 5111 - PSE North Bend Precon Design/7222511 _MMFS _M&P _PSE-OTC_R22.rvt
1/26/2024 9:47:42 AM

Autodesk Docs://7222 - 5111 - PSE North Bend Precon/Design/7222x5111_JAMES_JAMP_PSE-OTC_R22.rvt

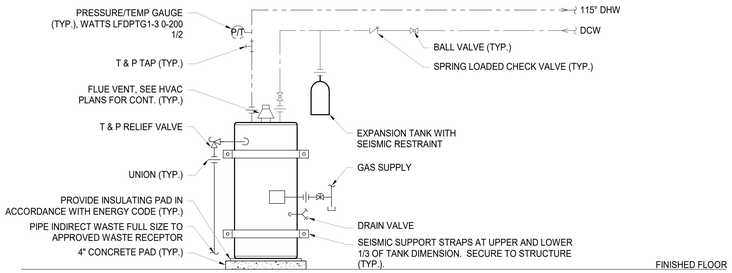

NOTES:

1. PROVIDE REDUCERS / INCREASERS AT PIPING CONNECTIONS AS REQUIRED FOR PROPER CONNECTION BETWEEN PIPING, COMPONENTS & EQUIPMENT.
2. CONFIRM ELECTRICAL CONNECTIONS & ROUGH-IN REQUIREMENTS WITH ELECTRICAL CONTRACTOR PRIOR TO CONSTRUCTION.
3. UNIONS BETWEEN COPPER AND STEEL MUST BE DI-ELECTRIC.
4. PIPE LENGTHS AND NUMBER OF FITTINGS SHOULD BE EQUIVALENT BETWEEN THE HOT AND COLD SIDES OF THE SYSTEM.

9 / P6.01 — GAS WATER HEATER DETAIL
N.T.S.

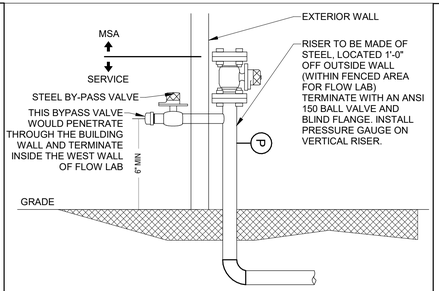

NOTE:
SEE FLOOR PLAN FOR RISER SIZE.

8 / P6.01 — COMPRESSED AIR RISER AT FLOW LAB
N.T.S.

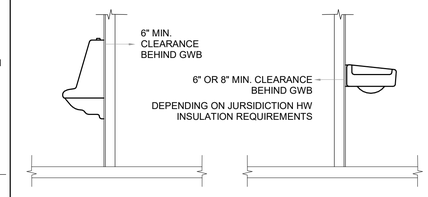

NOTE:

IF URINAL AND LAVATORIES ARE ON SAME WALL/FIXTURE BATTERY AS WATERCLOSETS, THEN MINIMUM CLEARANCE BEHIND URINALS/ LAVATORIES SHALL BE THE SAME AS REQUIRED FOR WALL HUNG WATER CLOSETS.

4 / P6.01 — MIN. WALL THICKNESS FOR WALL HUNG URINAL & LAVATORIES
N.T.S.

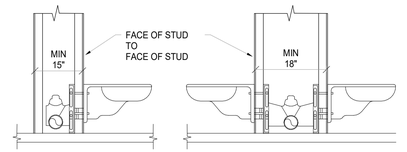

3 / P6.01 — MIN. WALL THICKNESS FOR WALL HUNG WATER CLOSETS
N.T.S.

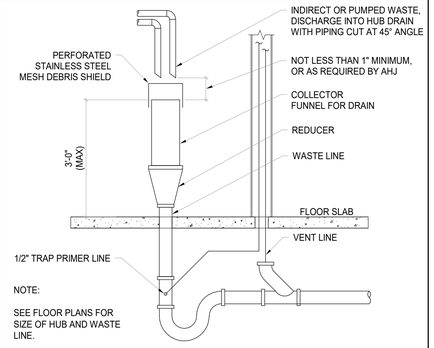

NOTE:

SEE FLOOR PLANS FOR SIZE OF HUB AND WASTE LINE.

7 / P6.01 — OPEN HUB DRAIN WASTE PIPING
N.T.S.

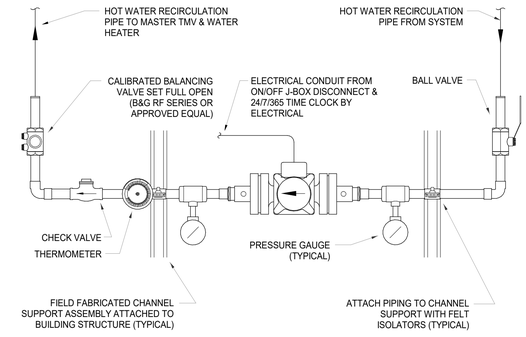

2 / P6.01 — HOT WATER RECIRCULATING PUMP
N.T.S.

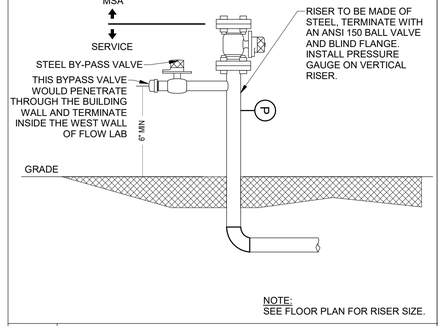

NOTE:
SEE FLOOR PLAN FOR RISER SIZE.

10 / P6.01 — COMPRESSED AIR RISER
N.T.S.

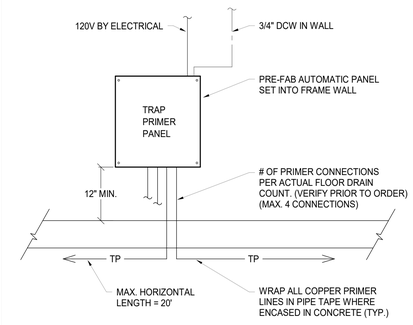

6 / P6.01 — ELECTRONIC TRAP PRIMER MANIFOLD
N.T.S.

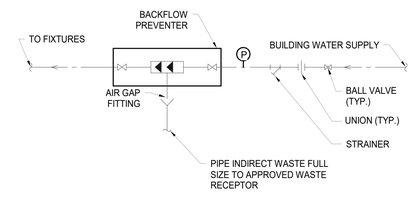

5 / P6.01 — REDUCED PRESSURE BACKFLOW PREVENTER SINGLE STATION
N.T.S.

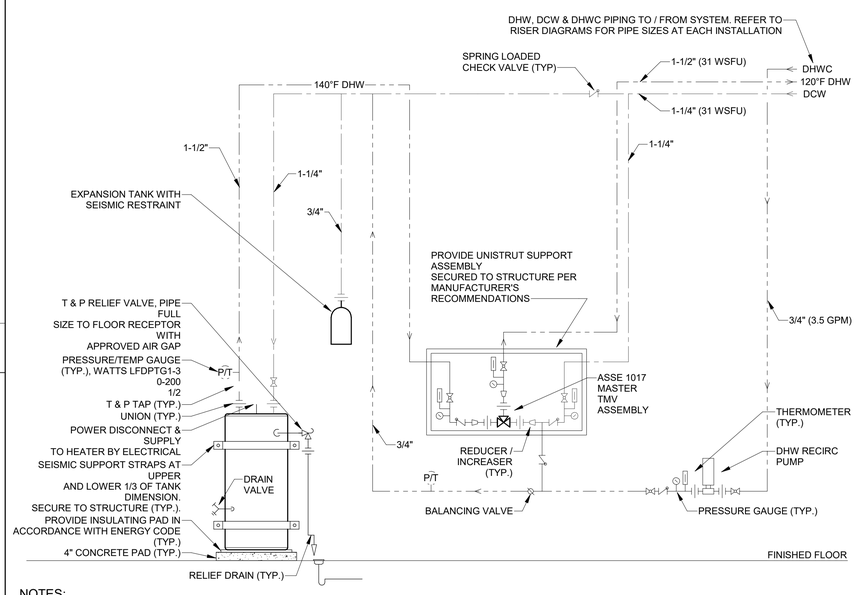

NOTES:

1. PROVIDE REDUCERS / INCREASERS AT PIPING CONNECTIONS AS REQUIRED FOR PROPER CONNECTION BETWEEN PIPING, COMPONENTS & EQUIPMENT.
2. CONFIRM ELECTRICAL CONNECTIONS & ROUGH-IN REQUIREMENTS WITH ELECTRICAL CONTRACTOR PRIOR TO CONSTRUCTION.
3. UNIONS BETWEEN COPPER AND STEEL MUST BE DI-ELECTRIC.

1 / P6.01 — ELECTRIC WATER HEATER W/ CIRC LINE
N.T.S.

1/26/2024 5:47:43 AM

PRCNC20240216

MacDonald-Miller FACILITY SOLUTIONS
17330 Intl. Blvd. Suite. 120 SeaTac. WA 98188
Phone: 206-763-9400 www.macmiller.com

DAVID L. JACQUES — STATE OF WASHINGTON — 22567 — REGISTERED — PROFESSIONAL ENGINEER

02/01/2024

REVISIONS:	DATE:
Permit Set	12/08/23
100% Design Development	09/22/23

REVIT CLOUD DESCRIPTION:

City of Puyallup
Development & Permitting Services
ISSUED PERMIT
Building — Planning
Engineering — Public Works
Fire — Traffic

PSE - OPERATIONAL TRAINING CENTER
325 TODD ROAD NW
PUYALLUP, WA 98371

PLUMBING DETAILS
PLUMBING
100% CD SET

ENGINEER: M. Kelly
LAST REVISED: 1/26/2024
CHECKED BY: D. Jacques
DATE PLOTTED: 1/26/2024
BIM: A. Perez
ISSUE DATE: 1/26/2024
PROJECT NUMBER: 7222-5111-00
SHEET NUMBER: P6.01

DPS STAMP

Autodesk Docs://7222 - 5111 - PSE North Bend Precon/Design/7222x5111_ MKFS _MAP _PSE-OTC_ R22.rvt

MECHANICAL GENERAL ABBREVIATIONS

ABBV	FULL NAME	ABBV	FULL NAME	ABBV	FULL NAME
AC	AIR CONDITIONING UNIT	EWT	ENTERING WATER TEMPERATURE	NO	NORMALLY OPEN
AFF	ABOVE FINISHED FLOOR	FCU	FAN COIL UNIT	NOM	NOMINAL
AHU	AIR HANDLING UNIT	FD	FIRE DAMPER	NTS	NOT TO SCALE
AL	ALUMINUM	FLA	FULL LOAD AMPS	OBD	OPPOSED BLADE DAMPER
BAS	BUILDING AUTOMATION SYSTEM	FOB	FLAT ON BOTTOM	OD	OUTSIDE DIMENSION
BDD	BACK DRAFT DAMPER	FOT	FLAT ON TOP	POC	POINT OF CONNECTION
BI	BLACK IRON	FSD	FIRE SMOKE DAMPER	PRV	PRESSURE REDUCING VALVE
BOD	BOTTOM OF DUCT	GALV	GALVANIZED	PVC	POLYVINYL CHLORIDE
BOTT	BOTTOM	GC	GENERAL CONTRACTOR	REQ'D	REQUIRED
BTU	BRITISH THERMAL UNITS	GENX	GENERATOR EXHAUST	RPBA	REDUCED PRESSURE BACKFLOW ASSY
BTUH	BRITISH THERMAL UNITS PER HOUR	GLVNL	GALVANNEAL	RTU	ROOFTOP UNIT
CAT1	CATEGORY ONE VENT	GPM	GALLONS PER MINUTE	SA	SUPPLY AIR
CAT4	CATEGORY FOUR VENT	GREASE	GREASE DUCT	SD	SMOKE DAMPER
CFM	CUBIC FEET PER MINUTE	GWB	GYPSUM WALL BOARD	SL	SOUND LINED
CPVC	CPVC MATERIAL	HP	HORSE POWER, HEAT PUMP	SM	SHEET METAL
DB	DUCTBOARD	HVAC	HEATING, VENTILATION AND AIR COND.	SP	STATIC PRESSURE
DDC	DIRECT DIGITAL CONTROLS	HX	HEAT EXCHANGER	SS	STAINLESS STEEL
DEMO	DEMOLISH	ID	INSIDE DIMENSION	SUSP	SUSPENDED
DP	DIFFERENTIAL PRESSURE	LAT	LEAVING AIR TEMPERATURE	T	THERMOSTAT
DPM	DIFFERENTIAL PRESSURE MONITOR	LBS	POUNDS	TOD	TOP OF DUCT
DIFF	DIFFUSER	LWT	LEAVING WATER TEMPERATURE	TV	TURNING VANES
DMPR	DAMPER	MAT	MIXED AIR TEMPERATURE	TYP	TYPICAL
DN	DOWN	MBH	ONE THOUSAND BTUH	UNO	UNLESS NOTED OTHERWISE
E	EXISTING	MCA	MINIMUM CIRCUIT AMPACITY	VAV	VARIABLE AIR VOLUME
EAT	ENTERING AIR TEMPERATURE	MD	MOTORIZED DAMPER	VD	VOLUME DAMPER
EC	EGGCRATE	MIN	MINIMUM	VFD	VARIABLE FREQUENCY DRIVE
EER	ENERGY EFFICIENCY RATIO	MFR	MANUFACTURER	W	DUCT INSULATION WRAP
EF	EXHAUST FAN	M-M	MACDONALD-MILLER	W/	WITH
ELEV	ELEVATION	NC	NORMALLY CLOSED	WELD	WELDED
ESP	EXTERNAL STATIC PRESSURE	NIC	NOT IN CONTRACT	Ø	VOLTAGE PHASE & DUCT DIAMETER

HVAC SYSTEM ABBREVIATIONS

ABBV	FULL NAME	ABBV	FULL NAME	ABBV	FULL NAME
COMB-GALV	COMBUSTION AIR	EA AL	EXHAUST ALUMINUM	OA	OUTSIDE AIR
SA	SUPPLY AIR LP	EA SS	EXHAUST SS 304	OA-KOOL	OUTSIDE AIR KOOLDUCT
SA-KOOL	SUPPLY AIR LP KOOLDUCT	EA AL WELD	EXHAUST ALUMINUM WELDED	RLF	RELIEF AIR
SA AL	SUPPLY AIR LP ALUMINUM	EA GALV WELD	EXHAUST GALV WELDED	RA	RETURN AIR
SA SS	SUPPLY AIR LP SS 304 2B	EA GLVNL WELD	EXHAUST GALVANNEAL WELDED	DB	DUCTBOARD
SA AL WELD	SUPPLY AIR LP ALUMINUM WELDED	EA SS WELD	EXHAUST SS 304 WELDED	FLU-CAT1	FLUE VENT - CATEGORY 1
SA GALV WELD	SUPPLY AIR MP GALV WELDED	EA BI GREASE	EXHAUST GREASE BLACK IRON WELD	FLU-CAT4	FLUE VENT - CATEGORY 4
SA GLVNL WELD	SUPPLY AIR MP GALVANNEAL WELDED	EA GALV GREASE	EXHAUST GREASE GALV WELDED	FLU-CPVC	FLUE VENT - CPVC MATERIAL
SA SS WELD	WELDED SUPPLY AIR LP SS 304 2B	EA GALV SS GREASE	EXHAUST GREASE SS 304 WELDED	FLU-SS	FLUE VENT - SHOP BUILT SS 304
EA	EXHAUST AIR	MUA	MAKE-UP AIR	FLU-GALV	FLUE VENT - SHOP BUILT GALV

PIPING SYSTEM ABBREVIATIONS

ABBV	FULL NAME	ABBV	FULL NAME	ABBV	FULL NAME
C	CONDENSATE INDIRECT DRAIN	GLWR	GLYCOL WATER RETURN	NGV	NATURAL GAS VENT
CA	AIR COMPRESSED	GLWS	GLYCOL WATER SUPPLY	PA	AIR PNEUMATIC
CDWR	CONDENSER WATER RETURN	HHWR	HEATING HOT WATER RETURN	PC	CONDENSATE PUMPED
CDWS	CONDENSER WATER SUPPLY	HHWS	HEATING HOT WATER SUPPLY	PCHR	CHILLED WATER (PROCESS) RETURN
CHRV	CHILLER RELIEF VENT	HPC	STEAM CONDENSATE HIGH PRESS	PCHS	CHILLED WATER (PROCESS) SUPPLY
CHWR	CHILLED WATER RETURN	HPS	STEAM HIGH PRESS	RGAS	REFRIGERANT HOT GAS
CHWS	CHILLED WATER SUPPLY	HRR	HEAT RECOVERY RETURN	RLIQ	REFRIGERANT LIQUID
CLN STM	STEAM CLEAN	HRS	HEAT RECOVERY SUPPLY	RSUC	REFRIGERANT SUCTION
CLR	CLOSED LOOP WATER RETURN	LPC	STEAM CONDENSATE LOW PRESS	SCHR	CHILLED WATER (SECONDARY) RETURN
CLS	CLOSED LOOP WATER SUPPLY	LPG	LIQUID PROPANE	SCHS	CHILLED WATER (SECONDARY) SUPPLY
COMB-PVC	AIR COMBUSTION PVC	LPS	STEAM LOW PRESS	SCV	STEAM CONDENSATE VENT
CRYV	CRYO VENT	LTCR	CHILLED WATER (LOW TEMP) RETURN	SPC	STEAM CONDENSATE PUMPED
DTWS	DUAL TEMP WATER SUPPLY	LTCS	CHILLED WATER (LOW TEMP) SUPPLY	SV	STEAM VENT
DTWR	DUAL TEMP WATER RETURN	MPC	STEAM CONDENSATE MEDIUM PRESS	VAC	VACUUM
FOC	FUEL OIL SECONDARY CONTAINMENT	MPS	STEAM MEDIUM PRESS	VAC-E	VACUUM EXHAUST
FOF	FUEL OIL FILL	MUW	MAKE-UP WATER	VRFG	VRF HOT GAS
FOR	FUEL OIL RETURN	NG-CONDUIT	NATURAL GAS CONDUIT	VRFL	VRF HIGH PRESS LIQUID
FOS	FUEL OIL SUPPLY	NG-H	NATURAL GAS HIGH PRESS	VRFS	VRF LOW PRESS SUCTION
FOV	FUEL OIL VENTS	NG-L	NATURAL GAS LOW PRESS		
GENX	GENERATOR EXHAUST	NG-M	NATURAL GAS MEDIUM PRESS		

SCOPE OF WORK

OTC BUILDING:
- PROVIDE VRF SYSTEM COUPLED WITH DOAS TO SERVE OCCUPIED BUILDING SPACES AND GENERAL EXHAUST
- FURNISH NEW OWNER SPECIFIED MECHANICAL APPLIANCES IN GAS APPLIANCE LAB.
- PROVIDE DEDICATED FLUE EXHAUST IN GAS APPLIANCE LAB
- PROVIDE GAS PIPING WITH ASSOCIATED PRV TO TRAINING APPLIANCES
- PROVIDE MAU FOR FLUE EXHASUT IN GAS APPLIANCE LAB.
- PROVIDE CAR VALVES AND VAV BOXES IN DOAS DISTRIBUTION
- PROVIDE DEDICATED DX SPLITS OR TRANSFER FANS FOR SERVER ROOMS AND ELECTRICAL ROOMS
- PROVIDE ELECTRICAL WALL HEATERS IN APPLICABLE PERIMETER SPACES

CONTROL HOUSE:
- PROVIDE VRF SYSTEM COUPLED WITH DOAS TO SERVE OCCUPIED BUILDING SPACES AND GENERAL EXHAUST

OUTDOOR VILLAGE:
- FURNISH NEW OWNER SPECIFIED MECHANICAL APPLIANCES IN THE SPACES.
- PROVIDE GAS PIPING FROM CIVIL POC AT GAS METER TO MECHANICAL APPLIANCES IN THE SPACES
- PROVIDE FLUE EXHAUST FROM MECHANICAL APPLIANCES THROUGH ROOF

VICINITY MAP

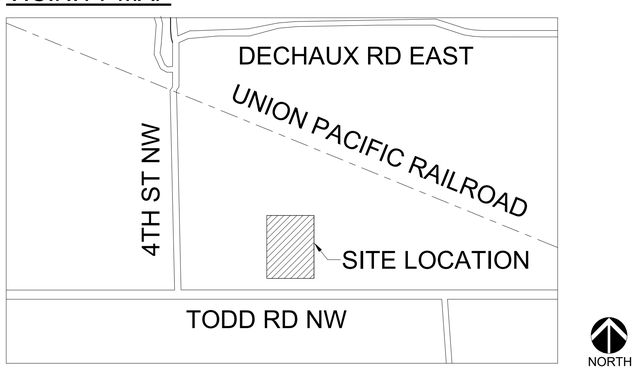

HVAC GENERAL NOTES - 2018 WSEC

1. THESE PLANS ARE SCHEMATIC AND DO NOT SHOW EXACT ROUTING OR EVERY OFFSET WHICH MAY BE REQUIRED. THE HVAC CONTRACTOR IS TO COORDINATE WITH ALL OTHER TRADES AND IS TO VERIFY ALL CLEARANCES BEFORE COMMENCING WORK.
2. MATERIALS, METHODS, AND INSTALLATION SHALL COMPLY WITH THE PROVISIONS OF THE 2018 EDITIONS OF THE INTERNATIONAL MECHANICAL CODE, INTERNATIONAL BUILDING CODE, INTERNATIONAL FIRE CODE 2018 WSEC, AND LOCAL CODES AND ORDINANCES.
3. ALL DUCT SIZE ANNOTATIONS REPRESENT ACTUAL OUTSIDE DIMENSIONS OF THE SHEET METAL (UNO). IF APPLICABLE, INTERIOR INSULATION WILL NEED TO BE ACOUNTED FOR WHEN DETERMINING ACTUAL DUCT FREE AREA. SEE DUCTWORK INSULATION SCHEDULE FOR ADDITIONAL SPACE REQUIRED FOR EXTERIOR (WRAP) INSULATION.
4. DUCT CONSTRUCTION AND HANGING SHALL COMPLY WITH CHAPTER 6 OF THE 2018 IMC AND WITH CURRENT SMACNA STANDARDS. EARTHQUAKE BRACE ALL DUCTS 28" DIA AND LARGER WHICH ARE SUSPENDED MORE THAN 12" BELOW STRUCTURAL SYSTEM.
5. JOINTS OF MEDIUM AND HIGH VELOCITY DUCT SYSTEMS SHALL BE SEALED WITH GASKETS OR LISTED MASTIC TYPE DUCT SEALANT.
6. DUCTS SHALL BE INSULATED AS INDICATED ON PLANS, PER 2018 WASHINGTON STATE ENERGY CODE, COMMERCIAL PROVISIONS
   - DUCT WRAP, WHERE INDICATED, SHALL BE 0.75 LB/CU FT FIBERGLASS DUCT INSULATION WITH A FACTORY APPLIED REINFORCED ALUM. FOIL VAPOR BARRIER.
   - SOUND LINING, WHERE INDICATED, SHALL BE 1" 1.5 LB/CU FT FIBERGLASS DUCT LINING COATED TO PREVENT FIBER EROSION AT VELOCITIES UP TO 6000 FPM.
   - DUCT BOARD, WHERE INDICATED, SHALL BE 1" RIGID FRK FACED EI 475 FIBERGLASS DUCT BOARD SYSTEM, UL 181 LISTED AS A CLASS 1 AIR DUCT.
   - SUPPLY DUCT WHICH CONVEYS SUPPLY AIR AT TEMPERATURES LESS THAN 55 DEG F OR GREATER THAN 105 DEG F WHEN LOCATED IN CONDITIONED SPACE SHALL BE INSULATED WITH A MINIMUM OF R-3.3 , WHEN LOCATED IN UNCONDITIONED SPACE R-6 AND WHEN LOCATED OUTSIDE THE BUILDING R-8 (CLIMATE ZONE 4) OR R-12 (CLIMATE ZONE 5) PER WSEC C403.10.1 AND TABLE C403.10.1.2. DUCTWORK EXPOSED TO VIEW WITHIN A ZONE THAT SERVES THAT ZONE IS NOT REQUIRED TO BE INSULATED.
   - OUTSIDE AIR DUCT INSULATION INSIDE THE BUILDING SHALL BE INSULATED PER C403.10.1 AND TABLE C403.10.1.1 AS FOLLOWS:
     IF >= 2800 CFM INSULATE TO R-16 UPSTREAM OF AUTOMATIC SHUTOFF DAMPERS AND R-8 (CLIMATE ZONE 4C) OR R-12 (CLIMATE ZONE 5B) DOWNSTREAM OF AUTOMATIC SHUTOFF DAMPERS.
     IF < 2800 CFM INSULATE TO R-7.
7. FLEX DUCTS SHALL CONSIST OF A REINFORCED VAPOR BARRIER, 1 1/2" FIBERGLASS INSULATION, AND NON-PERFORATED INTERIOR LINER WITH WIRE HELIX. DUCT SHALL BE A UL 181 LISTED CLASS 1 AIR DUCT. FLEX DUCTS SHALL ONLY BE USED WHERE SHOWN AND SHALL NOT EXCEED 12' IN LENGTH UNLESS NOTED OTHERWISE.
8. PROVIDE EARTHQUAKE RESTRAINT FOR HVAC EQUIPMENT IN ACCORDANCE WITH SECTION 1613 OF THE 2018 IBC.
9. PIPING PENETRATIONS OF FIRE RATED WALLS OR FLOORS SHALL BE SLEEVED AND FIRE STOPPED WITH LISTED MATERIALS SO AS TO MAINTAIN THE INTEGRITY AND RATING OF THE FLOOR OR WALL.
10. PROVIDE RETURN DUCT SMOKE DETECTOR AUTOMATIC SHUT DOWN OF ALL NEW HEATING, COOLING, OR VENTILATION EQUIPMENT MOVING IN EXCESS OF 2000 CFM IN ACCORDANCE WITH SECTION 606 OF THE 2018 IMC. POWER AND INTERLOCK WIRING WITH THE BUILDING FIRE ALARM SYSTEM IS BY THE ELECTRICAL CONTRACTOR. BAS TO MONITOR FIRE ALARM CONTROL PANEL AND SHUT DOWN ALL FAN TERMINAL UNITS DURING ANY BUILDING FIRE ALARM EVENT, IN ACCORDANCE WITH 2018 IMC 606.2.2.
11. HVAC EQUIPMENT, VALVES AND DAMPERS SHALL BE LOCATED IN EASILY ACCESSIBLE LOCATIONS. UNLESS SHOWN ON ARCHITECTURAL DRAWINGS, REQUIRED ACCESS PANELS SHALL BE PROVIDED AND INSTALLED BY THE GENERAL CONTRACTOR. MINIMUM ACCESS DOOR SIZE FOR VALVES AND DAMPERS TO BE 18" X 18".
12. MOTORS STARTERS NOT LISTED AS BEING PROVIDED IN THE HVAC EQUIPMENT SCHEDULES ARE TO BE PROVIDED AND INSTALLED BY ELECTRICAL CONTRACTOR.
13. WITHIN 90 DAYS AFTER THE DATE OF SYSTEM ACCEPTANCE, RECORD DRAWINGS OF THE ACTUAL INSTALLATION TO BE PROVIDED TO THE BUILDING OWNER. RECORD DRAWINGS SHALL INCLUDE AS A MINIMUM THE LOCATION AND PERFORMANCE DATA ON EACH PIECE OF EQUIPMENT, GENERAL CONFIGURATION OF DUCT AND PIPE DISTRIBUTION SYSTEM, INCLUDING SIZES, AND THE TERMINAL AIR AND WATER DESIGN FLOW RATES.
14. OPERATING AND MAINTENANCE MANUALS TO BE PROVIDED TO THE BUILDING OWNER THAT INCLUDE: SUBMITTAL DATA, NAMES AND ADDRESSES OF AT LEAST ONE SERVICE AGENCY, HVAC CONTROLS SYSTEM MAINTENANCE AND CALIBRATION INFORMATION AND A COMPLETE OPERATIONAL NARRATIVE FOR EACH SYSTEM.
15. COMMISSIONING IS REQUIRED ON THIS PROJECT IN ACCORD WITH 2018 WASHINGTON STATE ENERGY CODE (WSEC), COMMERCIAL PROVISIONS AND SECTION C408. PLEASE SEE SCHEDULED COMMISSINING NOTES FOR FURTHER DETAIL.
16. A COMPLETE REPORT OF TEST PROCEDURES AND RESULTS SHALL BE PREPARED AND FILED WITH THE OWNER
17. DAMPERS USED FOR OUTDOOR AIR INTAKE, EXHAUST, OR RELIEF SHALL HAVE THE FOLLOWING MAXIMUM LEAKAGE RATES AT 1" W.G. (PER AMCA STANDARD 500D): MOTORIZED DAMPERS: 4 CFM/S.F. GRAVITY DAMPERS: 20CFM/S.F. (40 CFM/S.F. FOR DAMPERS SMALLER THAN 24" IN EITHER DIMENSION) PER 2018 WSEC C403.7.8.3.
18. OUTSIDE AIR INTAKE, EXHAUST, AND RELIEF DAMPERS SERVING CONDITIONED SPACES MUST BE MOTORIZED (FAIL CLOSED) PER WSEC, COMMERCIAL PROVISIONS, 2018 WSEC SECTION C403.7.8. EXCEPT AS ALLOWED BY WSEC.
19. MATERIALS WITHIN PLENUMS SHALL BE NONCOMBUSTIBLE OR SHALL BE LISTED AND LABELED AS HAVING A FLAME SPREAD INDEX OF NOT MORE THAN 25 AND A SMOKE-DEVELOPED INDEX OF NOT MORE THAN 50 WHEN TESTED IN ACCORDANCE WITH ASTM E 84 OR UL 723, EXCEPT AS NOTED IN SECTION 602.2.1 OF THE 2018 IMC.
20. ALL MECHANICAL WORK SHOWN ON DRAWINGS INTENDED TO BE INSTALLED SOLELY BY MACDONALD -MILLER FACILITY SOLUTIONS. MACDONALD-MILLER FACILITY SOLUTIONS SHALL NOT BE HELD ACCOUNTABLE FOR ANY DESIGN OR CONSTRUCTION DEFICIENCIES IF WORK IS PERFORMED BY AN OUTSIDE PARTY.
21. PROVIDE LABEL IDENTIFICATION ON ALL DUCTWORK.

LEGAL DESCRIPTION

PARCEL NUMBER: 0420211030

LEGAL DESCRIPTION: THAT PORTION OF THE WILLIAM BENSTON DONATION LAND CLAIM NO. 47 IN SECTIONS 16 AND 21, TOWNSHIP 20 NORTH, RANGE 4 EAST OF THE W.M., IN PIERCE COUNTY, WASHINGTON, LYING SOUTHERNLY OF CHICAGO, MILWAUKEE & ST. PAUL RAILROAD RIGHT OF WAY AND LYING WESTERLY OF NORTH MERIDIAN (AKA SR 161) AND LYING NORTHERLY OF TODD ROAD NORTHWEST (AKA 23RD AVENUE NORTHWEST) AND LYING EASTERLY OF THAT 15 FOOT STRIP CONVEYED TO PIERCE COUNTY FOR ROAD PURPOSES (4TH STREET NORTHWEST, AKA DESHAUX LANE) NY DEED RECORDED UNDER RECORDING NO. 1783507

CONTACT LIST

TITLE	NAME	COMPANY	PHONE NUMBER	EMAIL
HVAC DESIGN ENGINEER	GARRETT TOWNSEND	MACDONALD MILLER	206-905-3766	GARRETT.TOWNSEND@MACMILLER.COM
PLUMBING DESIGN ENGINEER	MICHAEL KELLY	MACDONALD MILLER	206-768-4224	MICHAEL.KELLY@MACMILLER.COM
ACCOUNT MANAGER	BROCK LEE	MACDONALD MILLER	206-768-3838	BROCK.LEE@MACMILLER.COM

DRAWING SHEET INDEX - HVAC

NUMBER	TITLE
M0.01	SCHEDULES
M0.01S	SITE PLAN - HVAC
M0.02	SCHEDULES
M0.03	SCHEDULES
M0.04	SCHEDULES
M0.05	SCHEDULES
M2.01	1ST FLOOR PLAN - HVAC
M2.01A	1ST FLOOR SECTOR A PLAN - HVAC
M2.01B	1ST FLOOR SECTOR B PLAN - HVAC
M2.01C	1ST FLOOR SECTOR C PLAN - HVAC
M2.01D	1ST FLOOR SECTOR D PLAN - HVAC
M2.02	ROOF PLAN - HVAC
M4.01	APPLIANCE LAB - SECTIONS
M6.01	DETAILS - HVAC
MP0.01S	SITE PLAN - FITTING
MP2.01	1ST FLOOR PLAN - FITTING
MP2.01A	1ST FLOOR SECTOR A PLAN - FITTING
MP2.01B	1ST FLOOR SECTOR B PLAN - FITTING
MP2.01C	1ST FLOOR SECTOR C PLAN - FITTING
MP2.01D	1ST FLOOR SECTOR D PLAN - FITTING
MP2.02	ROOF PLAN - FITTING
MP4.01	VRF DIAGRAMS - FITTING
MP4.02	SPLIT SYSTEM DIAGRAMS - FITTING
MP4.03	NATURAL GAS RISER DIAGRAM - FITTING
MP6.01	DETAILS - FITTING

01/26/24 11:51:02

PRCNC20240216

MacDonald-Miller
FACILITY SOLUTIONS
17330 Intl. Blvd. Suite.120 SeaTac, WA 98188
Phone: 206-763-9400 www.macmiller.com

GEORGE M. GRAHAM
STATE OF WASHINGTON
39332
REGISTERED PROFESSIONAL ENGINEER

2/1/2024

REVISIONS:	DATE:
REVIT CLOUD DESCRIPTION:	
100% Design Development	09/22/23
Permit Set	12/08/23

City of Puyallup
Development & Permitting Services
ISSUED PERMIT
Building | Planning
Engineering | Public Works
Fire | Traffic

PSE - OPERATIONAL TRAINING CENTER
325 TODD ROAD NW
PUYALLUP, WA 98371

HVAC SCHEDULES
MECHANICAL

100% CD SET

ENGINEER: G. Townsend
LAST REVISED: 1/26/2024
CHECKED BY: G. Graham
DATE PLOTTED: 1/26/2024
BIM: A. Perez
ISSUE DATE: 1/26/2024
PROJECT NUMBER: 7222-5111-00
SHEET NUMBER: M0.01

DRS STAMP

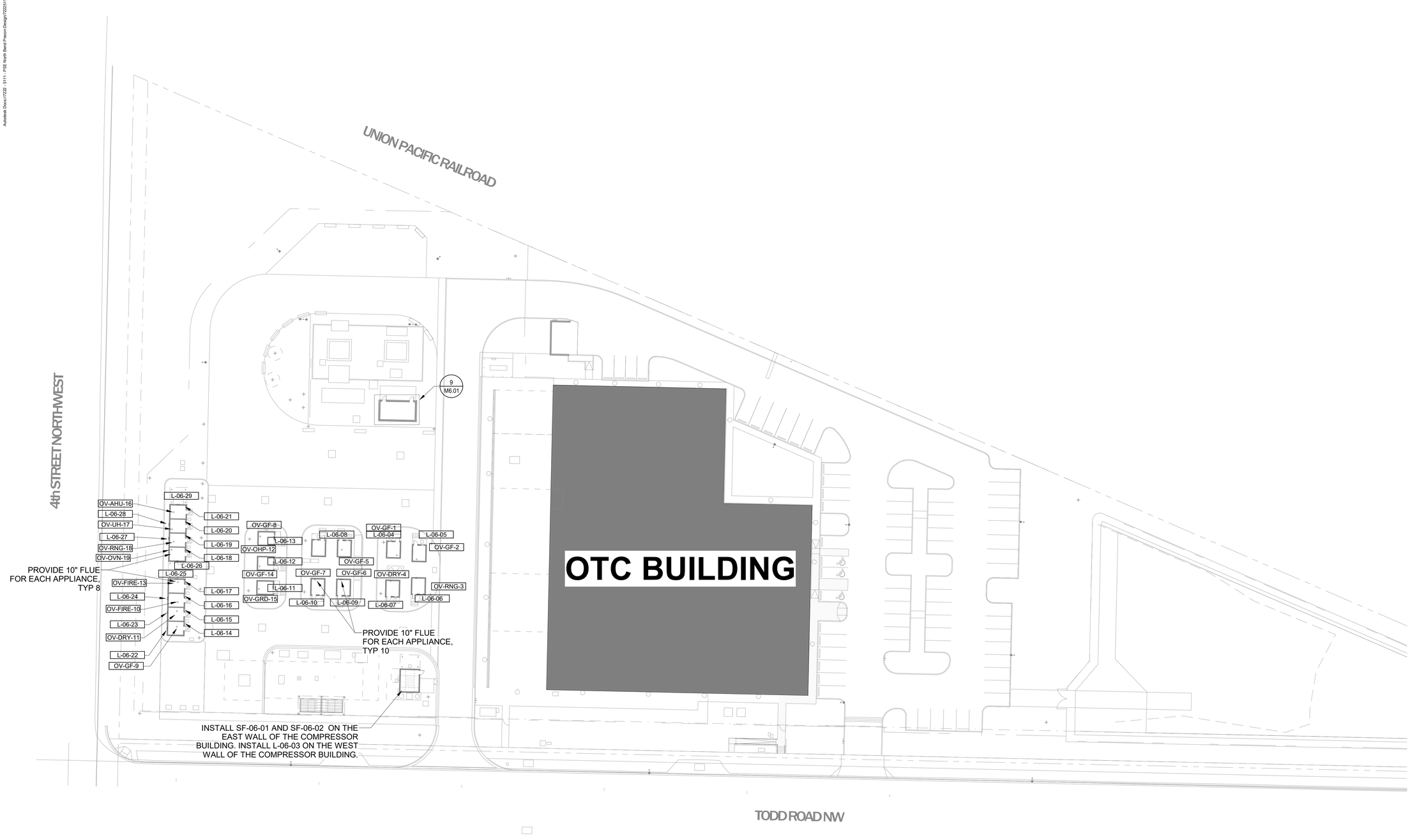

1 Site Plan - MECHANICAL
SCALE: 1/32" = 1'-0"

PRCNC20240216

MacDonald-Miller
FACILITY SOLUTIONS
17930 Intl. Blvd. Suite 120 SeaTac, WA 98188
Phone: 206-763-9400 www.macmiller.com

2/1/2024

REVISIONS:	REVIT CLOUD DESCRIPTION:	DATE:
	Permit Set	12/08/23
	100% Design Development	09/22/23

City of Puyallup
Development & Permitting Services
ISSUED PERMIT

Building	Planning
Engineering	Public Works
Fire	Traffic

PSE - OPERATIONAL TRAINING CENTER
325 TODD ROAD NW
PUYALLUP, WA 98371

SITE PLAN - MECHANICAL
MECHANICAL
100% CD SET

ENGINEER: G. Townsend	LAST REVISED: 1/26/2024
CHECKED BY: G. Graham	DATE PLOTTED: 1/26/2024
BIM: A. Perez	ISSUE DATE: 1/26/2024
PROJECT NUMBER: 7222-5111-00	
SHEET NUMBER: M0.01S	

DPD STAMP

Autodesk Docs://7222 - 5111 - PSE North Bend Precon Design/7222r5111_MKFS_MAP_PSE-OTC_R22.rvt

DAMPER SCHEDULE & LEGEND

TAG	DESCRIPTION	NOTES	TAG	DESCRIPTION	NOTES
MD-1 (M)	MOTORIZED CONTROL DAMPER. SEE MOTORIZED DAMPER SCHEDULE.	1			

NOTES:
1. ACTUATOR BY MECHANICAL CONTRACTOR, WIRING BY ELECTRICAL CONTRACTOR

PIPING GENERAL NOTES

PIPING MATERIAL SCHEDULE

PIPING	SIZE	MATERIAL	JOINT
NATURAL GAS	1/2" - 2"	SCH 40 BLK STL, ASTM A53 A OR B	THREADED, FLANGED, SOCKET WELDED
	2-1/2" - 4"	SCH 40 BLK STL, ASTM A53 A OR B	BUTT WELDED, FLANGED
INDIRECT DRAIN	1/2" - 2-1/2"	COPPER TYPE L	LEAD FREE SOLDER, PRESSED MECH JOINT
REFRIGERATION	1/8" - 4-1/8"	COPPER TUBE, ACR	BRAZED

PIPING INSULATION SCHEDULE

PIPING TYPE	PIPE SIZE	INSULATION TYPE	INSULATION THICKNESS	CONDUCTIVITY RANGE
COIL CONDENSATE PIPING	1/2" - 1-1/4"	FIBERGLASS, ELASTOMERIC FOAM	1/2"	0.21 - 0.27
	1-1/2" +	FIBERGLASS, ELASTOMERIC FOAM	1"	0.21 - 0.27
REFRIGERATION SUCTION	1/8" - 1"	ELASTOMERIC FOAM	1/2"	0.21 - 0.27
	1-1/8" +	ELASTOMERIC FOAM	1"	0.21 - 0.27
REFRIGERATION MIXED (DOWNSTREAM OF TXV)	1/8" - 7/8"	ELASTOMERIC FOAM	1"	0.21 - 0.27

- ALL PIPING INSULATION AND COVERINGS SHALL HAVE AN ASTM FLAME SPREAD RATING OF 25 OR LESS AND AN ASTM SMOKE DEVELOPED RATING OF 50 OR LESS.
- ELASTOMERIC INSULATIONS SHALL BE CLOSED CELL.
- ELASTOMERIC INSULATIONS WHICH MEET THESE RATINGS MAY BE USED AS A SUBSTITUTE FOR FIBERGLASS.
- PROVIDE A VAPOR BARRIER COVERING ON ALL CHILLED WATER PIPING AND COIL CONDENSATE PIPING INSULATION.
- PROVIDE A COVERING FOR ALL FIBERGLASS INSULATION WITHIN THE BUILDING.
- PROVIDE A VINYL JACKET FOR ALL INSULATION EXPOSED TO SIGHT WITHIN THE BUILDING EXCEPT MECHANICAL ROOMS.
- PROVIDE REMOVABLE LACED INSULATION PAD OVER ALL CONTROL VALVES, WHERE NOT LOCATED WITHIN A MECHANICAL ROOM.
- PROVIDE ALUMINUM JACKET ON ALL INSULATED PIPING OUTSIDE BUILDING.
- AT PIPE HANGERS PROVIDE RIGID INSULATION BETWEEN PIPE AND HANGER.

1. THESE PLANS ARE SCHEMATIC AND DO NOT SHOW EXACT ROUTING OR EVERY OFFSET WHICH MAY BE REQUIRED. THE MECHANICAL CONTRACTOR IS TO COORDINATE WITH ALL OTHER TRADES AND IS TO VERIFY ALL CLEARANCES BEFORE COMMENCING WORK.
2. MATERIALS, METHODS, AND INSTALLATION SHALL COMPLY WITH THE PROVISIONS OF THE 2018 INTERNATIONAL BUILDING CODE (IBC), INTERNATIONAL MECHANICAL CODE (IMC), INTERNATIONAL ENERGY CODE (IEC) AND UNIFORM PLUMBING CODE (UPC) AS AMENDED BY THE STATE OF WASHINGTON AND LOCAL AUTHORITIES.
3. ALL PIPE SIZES NOTED ON DRAWINGS ARE MINIMUMS.
4. SLOPE ALL INDIRECT DRAINS AT 2% UNLESS OTHERWISE NOTED ON DRAWINGS. OBTAIN APPROVAL FROM THE CODE AUTHORITY BEFORE INSTALLING PIPING AT LESS THAN 2% (EVEN IF LESSER SLOPE IS INDICATED ON DRAWINGS).
5. HANGERS AND SUPPORTS FOR PIPING SHALL BE IN ACCORDANCE WITH THE 2018 IMC AND IBC AS AMENDED BY THE STATE OF WASHINGTON AND LOCAL AUTHORITIES.
6. PIPING PENETRATIONS OF FIRE RATED WALLS OR FLOORS SHALL BE SLEEVED AND FIRE STOPPED WITH LISTED MATERIALS SO AS TO MAINTAIN THE INTEGRITY AND RATING OF THE FLOOR OR WALL.
7. PROVIDE CHROME PLATE ESCUTCHEON PLATES AT ALL EXPOSED WALL AND CEILING PENETRATIONS.
8. PROVIDE SHUT-OFF VALVES AT ALL EQUIPMENT CONNECTIONS.
9. PROVIDE UNION, GROOVED OR FLANGED CONNECTION AT EQUIPMENT FOR FUTURE REMOVAL AND SERVICING.
10. FOR CONDENSATE PIPING PROVIDE TRAPS WITH A MINIMUM SEAL 2" GREATER THAN THE FAN OPERATING STATIC PRESSURE AT ALL COOLING COIL CONNECTIONS.
11. PROVIDE MINIMUM 1" AIR BREAK FOR ALL CONDENSATE PIPE TERMINATIONS AT DRAINS.
12. PROVIDE DIELECTRIC CONNECTIONS BETWEEN DISSIMILAR METALS.
13. PROVIDE PIPE LEVEL IDENTIFICATION IN ACCORDANCE WITH ASME A13.1 STANDARDS.

DUCTWORK SCHEDULE

SERVICE / USAGE	LOCATION	MATERIAL	WORKING PRESSURE (IN. WC)	SMACNA PRESSURE CLASS (IN. WC)	SMACNA SEAL CLASS	NOTES
OUTDOOR AIR INTAKE	BETWEEN AMBIENT AND AHU	GALV. STEEL	0.5	1	B	1
LOW PRESSURE SUPPLY AIR	FROM TERMINAL UNITS TO GRD'S	GALV. STEEL	1	1	B	1
FLEXIBLE DUCT	CONN TO GRD'S	PREINSUL. FLEX	0.5	RATED +6", -1"	NA	2, 3
RETURN AIR	FROM GRD'S TO AHU	GALV. STEEL	1	1	B	1
TRANSFER AIR	FROM GRD TO GRD	GALV. STEEL	0.05	1	B	1
RELIEF AIR	FROM AHU TO AMBIENT	GALV. STEEL	1	1	B	1
GENERAL EXHAUST	FROM GRD TO FAN AND AMBIENT	GALV. STEEL	1	1	B	1
WASHROOM EXHAUST	FROM GRD TO FAN AND AMBIENT	GALV. STEEL	1	1	B	1
FLUE VENT AIR	FROM UNIT TO AMBIENT	DURASEAL DSD	1	1	B	3

NOTES:
1. SHEET METAL GAUGES AND FITTINGS PER SMACNA AND MACDONALD-MILLER DUCT CONSTRUCTION STANDARDS.
2. THERMAFLEX "GKM" OR EQUAL, WITH 12 FOOT MAXIMUM LENGTH.
3. INSTALL PER MFG. GUIDELINES AND INSTRUCTIONS.

PIPING SYMBOL LEGEND

SYMBOL	DESCRIPTION	ABBV	SYMBOL	DESCRIPTION	ABBV
	VALVE TWO-WAY CONTROL	2WAY		METER BTU	BTU MTR
	VALVE THREE-WAY CONTROL	3WAY		SUB-METER WATER FLOW	MTR
AF	VALVE AUTOMATIC FLOW CONTROL	AF	BTU	PRESSURE / TEMPERATURE PORT	P&T
	VALVE BALANCING	BALV	M	SENSOR PRESSURE DIFFERENTIAL	DP
	VALVE BALANCING AUTOMATIC	ABALV		STRAINER	STRN
	VALVE BALL - FULL PORTED	BV	DP	SUCTION DIFFUSER	SUC DIFF
	VALVE BALL - W/ 3/4" HOSE ADAPTOR	BV W/ HA		UNION	UNION
	VALVE BUTTERFLY	BFV		HOSE BIBB	HB
	VALVE BUTTERFLY - W/ MEMORY STOP	BFVM		PIPE BREAK - PIG TAIL	
	VALVE CHECK	CV		POINT OF CONNECTION	P.O.C.
	VALVE CIRCUIT SETTER	CS		CONCENTRIC REDUCER	CR
	VALVE GAS COCK	GC		ECCENTRIC REDUCER	ER
	VALVE GATE	GV		PIPE - EXISTING	
	VALVE GLOBE	GLV		PIPE - DEMO	
	VALVE PRESSURE REDUCING	PRV	6" CHWS	PIPE - NEW	
	VALVE PRESSURE RELIEF	RV	6" CHWS	PIPE - FUTURE	
	VALVE SOLENOID	SV		PIPE - SIZE & ABBREVIATION	
	AUTOMATIC AIR VENT	AV		PIPE - SIZE & ABBREVIATION WITH INSULATION	
	MANUAL AIR VENT	MAV		THERMAL EXPANSION DEVICE	EXP
	WATER HAMMER ARRESTOR	WHA		FLEXIBLE CONNECTION	
	BACKFLOW PREVENTER	BFP		FLEX PIPE	
	REDUCED PRESS. BACKFLOW PREVENTER	RPBP		PIPE - HEAT TRACE	
	BULB WELL	BW		PUMP	
	FLOW DIRECTION ARROW			AIR SEPARATOR	AIR SEP
P	PRESSURE INDICATOR	PRESS		CHEMICAL POT FEEDER	CPOT
	SENSOR	SNSR		HEAT EXCHANGER	HTX
	TEMPERATURE INDICATOR	THERM		EXPANSION TANK	ET

HVAC SYMBOL LEGEND

DESCRIPTION	SYMBOL	DESCRIPTION	SYMBOL
BARE RECTANGULAR SHEETMETAL	14x12 SA	SUPPLY DUCT UP/DOWN	
SOUNDLINE SHEETMETAL (GENERAL NOTES)	14x12 SA-SL	EXHAUST DUCT UP/DOWN	
SHEETMETAL W/ INSULATION (GENERAL NOTES)	14x12 SA-W	RETURN DUCT UP/DOWN	
BARE ROUND SHEETMETAL	12ø SA	SUPPLY AIR TERMINAL RECTANGULAR AND SQUARE	
ROUND SHEETMETAL W/ INSULATION (GENERAL NOTES)	12ø SA-W	RETURN AIR TERMINAL RECTANGULAR AND SQUARE	
BARE OVAL SHEETMETAL	14x12ø SA	EXHAUST AIR TERMINAL RECTANGULAR AND SQUARE	
OVAL SHEETMETAL W/ INSULATION (GENERAL NOTES)	14x12ø SA-W	SUPPLY AIR SLOT DIFFUSER	
EXAMPLE OF EXISTING	14x12 SA	RETURN AIR SLOT DIFFUSER	
EXAMPLE OF DEMO	XXXXXXXX XXXXXXXX	EXHAUST AIR SLOT DIFFUSER	
EXAMPLE OF NEW	14x12 SA	POINT OF CONNECTION	
EXAMPLE OF FUTURE (N.I.C.)	14x12 SA	CENTER LINE	
EXPOSED QUALITY SHEETMETAL	14x12 SA-Q	THERMOSTAT	T
CLEANROOM QUALITY DUCTWORK	14x12 SA-C	CARBON MONOXIDE SENSOR	CO
DUCTBOARD (1" FIBERGLASS)	14x12 SA-DB	NITROGEN DIOXIDE SENSOR	NO2
CONTINUATIION OF ROUND DUCT		HUMIDITY SENSOR	H
CONTINUATION OF RECTANGULAR DUCT		OTHER SENSOR	S
AIR FLOW IN SYMBOL		SMOKE DETECTOR	SD
AIR FLOW OUT SYMBOL		ELECTRICAL SWITCH	$
MECHANICAL EQUIPMENT TAG	AHU-001	MITERED ELBOW WITH TURNING VANES	
KEYED NOTE	1	DOUBLE NEGATIVE PRESSSURE	- -
ACCESS DOORS		DOUBLE POSITIVE PRESSSURE	+ +
RATED ENCLOSURE		NEUTRAL PRESSSURE	NEUT
FLEX DUCT	14ø 14ø	SINGLE NEGATIVE PRESSSURE	-
EQUIPMENT FLEX ROUND CONNECTOR	24ø	SINGLE POSITIVE PRESSSURE	+
EQUIPMENT FLEX RECTANGULAR CONNECTOR	24x24	DIFFERENTIAL PRESSURE MONITOR	DPM
RADIAL AIR TERMINAL		DPM SENSOR SYMBOL	
		ROOM AIRFLOW ARROW	

NOTE: SIZE REFLECTS ACTUAL SHEET METAL DIMENSION AND DOES NOT ACCOUNT FOR INSULATION OR LINING

AIR TERMINAL SCHEDULE

TAG	MANUFACTURER & MODEL NUMBER	SIZE	TYPE	NOTES
A SIZE / CFM	SHOEMAKER RS34-O	AS NOTED	DOUBLE DEFLECTION RADIUS SPIRAL PIPE SUPPLY GRILLE	WITH OBD. GRILLE HEIGHT MUST BE 4" SMALLER THAN DUCT HEIGHT. NOTE DUCT HEIGHT WHEN ORDERING.
B SIZE / CFM	SHOEMAKER 700MA	AS NOTED	T-BAR LAY-IN MODULAR CORE DIFFUSER	
C SIZE / CFM	SHOEMAKER 904	AS NOTED	DOUBLE DEFLECTION SIDEWALL DIFFUSER	SURFACE MOUNT
D SIZE / CFM	SHOEMAKER 905	AS NOTED	45° FIXED BLADE RETURN/RELIEF AIR GRILLE	SURFACE MOUNT
E SIZE / CFM	SHOEMAKER RS34-O	AS NOTED	DOUBLE DEFLECTION RADIUS SPIRAL PIPE RETURN/EXHAUST GRILLE	WITH OBD. GRILLE HEIGHT MUST BE 4" SMALLER THAN DUCT HEIGHT. NOTE DUCT HEIGHT WHEN ORDERING.
	SHOEMAKER AL	12/24	T-BAR LAY-IN METAL EGGCRATE (RETURN/EXH)	
	SHOEMAKER AL	24/24	T-BAR LAY-IN METAL EGGCRATE (RETURN/EXH)	

01/26/24 11:51:06

PRCNC20240216

MacDonald-Miller
FACILITY SOLUTIONS
17930 Intl. Blvd. Suite. 120 SeaTac. WA 98188
Phone: 206-763-9400 www.macmiller.com

GEORGE M. GRAHAM
STATE OF WASHINGTON
39332
REGISTERED
PROFESSIONAL ENGINEER

2/1/2024

DATE:	DESCRIPTION:
12/08/23	REVIT CLOUD
09/22/23	100% Design Development
	Permit Set
	REVISIONS:

City of Puyallup
Development & Permitting Services
ISSUED PERMIT

Building	Planning
Engineering	Public Works
Fire	Traffic

PSE - OPERATIONAL TRAINING CENTER
325 TODD ROAD NW
PUYALLUP, WA 98371

HVAC SCHEDULES
MECHANICAL
100% CD SET

ENGINEER: G. Townsend
LAST REVISED: 1/26/2024
CHECKED BY: G. Graham
DATE PLOTTED: 1/26/2024
BIM: A. Perez
ISSUE DATE: 1/26/2024
PROJECT NUMBER: 7222-5111-00
SHEET NUMBER: M0.02

DPR STAMP

Autodesk Docs://7222 - 5111 - PSE North Bend Precon Design/7222511_MKFS _MAP _PSE-OTC_R22.rvt

DOAS UNIT SCHEDULE

UNIT NO.	AREA SERVED	MFG & MODEL NO.	FAN SECTIONS: SUPPLY AIR MAX CFM	SUPPLY AIR MIN CFM	SUPPLY AIR ESP	SUPPLY AIR TSP	FAN QTY	FAN RPM	FAN HP EA	RELIEF AIR MAX CFM	RELIEF AIR MIN CFM	RELIEF AIR TSP	FAN QTY	FAN RPM	FAN HP EA	HEATING: SUPPLEMENTARY ELECTRIC KW	SUPPLEMENTARY ELECTRIC LAT	SUPPLEMENTARY ELECTRIC CONTROL	ENERGY RECOVERY: SUMMER EFF (%)	WINTER EFF (%)	SUMMER EAT	SUMMER LAT	WINTER EAT	WINTER LAT	UNIT INFO: FILTERS	UNIT ELEC VOLT/PH	UNIT ELEC MCA	OPER WT LBS	NOTES
DOAS-R-01	OTC BUILDING	SYSTEM AIR GENIOX 20	5,900	3,735	0.9	1.8	1	1060	2.9 kW	5,900	3,735	1.7	1	1044	2.9 kW	58	55	SCR	81.8	80.5	86	77	19	60	MERV 13	460/3	86	7700	NEW, 1-4
DOAS-06-01	CONTROL HOUSE	LOSSNAY LGH-F300RVX2-E	225	225	0.56	2	1	-	0.1	225	225	-	1	-	0.1	-	-	-	58	63	86	-	20	-	MERV 13	208/1	4.3	75	NEW, 1-2,5

NOTES:
1. POWER WIRING AND DISCONNECT SWITCH BY ELECTRICAL CONTRACTOR.
2. UNIT HAS SINGLE POINT POWER CONNECTION.
3. UNIT PROVIDED WITH LOW LEAKAGE MOTOIRZED DAMPERS AT OUTSIDE AIR INTAKE AND EXHAUST AIR DISCHARGE.
4. UNIT MEETS REQUIREMENTS OF WSEC TABLE C406.1, CODE SECTION NUMBER 7, HIGH PERFORMANCE DOAS..
5. INTERLOCK MOTORIZED DAMPERS AT OUTSIDE AIR INTAKE AND EXHAUST AIR DISCHARGE.

MAKE-UP AIR UNIT SCHEDULE

UNIT NO.	AREA SERVED	MFG & MODEL NO.	FAN CFM	FAN ESP	FAN BHP	FAN HP	AIR-SOURCE HEAT PUMP COOLING TOTAL MBH	SENS MBH	EAT DB	EAT WB	LAT DB	LAT WB	EER	PRIMARY HEAT PUMP HEATING TOTAL MBH	EAT	LAT	COP	SECONDARY ELECTRIC HEATING KW	EAT	LAT	CONTROL	ELECTRICAL VOLT/PH	MCA	WT LBS	NOTES
MUA-R-01	APPLIANCE LAB	GREENHECK RV-25-12.5A-1-E1	4800	0.25	2.71	5	169.4	158	86.1	66.8	56	55.4	-	99.5	24	43.2	-	60	24	63.5	SCR	460/3	103.8	2798	NEW, 1-7

NOTES:
1. DISCONECT BY EC
2. PROVIDE WITH ROOF CURB GKD-45.9/91.9-G14. ATTACH PER STRUCTURAL INFORMATION.
3. ELECTRICAL IS SINGLE POINT CONNECTION
4. PROVIDE WITH FACTORY MOUNTED VFD
5. CONTROL TO DISCHARGE AIR TEMPERATURE. SEE SEQUENCE OF OPERATION
6. PROVIDE 2" MERV 13 FILTERS
7. PROVIDE MOTORIZED DAMPER

VRF HEAT PUMP CONDENSING UNIT SCHEDULE

UNIT NO.	AREA SERVED	MITSUBISHI MODEL NO.	CONNECTED BC UNIT	NOM COOL TONS	HEAT MBH	COP	EER/ IEER	ELECTRICAL MODULE 1 VOLT/PH	ELECTRICAL MODULE 1 MCA	ELECTRICAL MODULE 2 VOLT/PH	ELECTRICAL MODULE 2 MCA	WT LBS	NOTES
CU-R-01	OTC NORTH	PURY-EP192YNU-A	BC-01-01	16	215	3.75	13.0/25.3	460/3	14	460/3	14	1314	NEW, 1,2,4,6
CU-R-02	OTC EAST	PURY-EP192YNU-A	BC-01-02	16	215	3.75	13.0/25.3	460/3	14	460/3	14	1314	NEW, 1,2,4,6
CU-R-03	OTC SOUTH	PURY-EP432YSNU-A	BC-01-03	36	480	3.2	9.95/15	460/3	33	460/3	33	1836	NEW, 1,3,4,6
CU-R-04	OTC WEST	PURY-EP432YSNU-A	BC-01-04	36	480	3.2	9.95/15	460/3	33	460/3	33	1836	NEW, 1,3,4,6
CU-R-05	MAIN ELECTRICAL	PUHY-EP96YNU-A	-	8	-	-	14.1/26.7	460/3	14	-	-	657	NEW, 1,5,6
CU-06-01	CONTROL HOUSE	PUHY-EP96YNU-A	-	8	-	-	14.1/26.7	460/3	14	-	-	657	NEW, 1,6

NOTES:
1. ELECTRICAL CONTRACTOR TO PROVIDE AND INSTALL ELECTRICAL DISCONNECT.
2. UNIT IS TWO MODULES TWINNED TOGETHER WITH TWINNING KIT CMY-R200NCBK.
3. UNIT IS TWO MODULES TWINNED TOGETHER WITH TWINNING KIT CMY-R300NCBK.
4. TWO POINTS OF ELECTRICAL CONNECTION REQUIRED, ONE FOR EACH MODULE.
5. LOCK OUT UNIT HEATING.
6. UNIT MEETS REQUIREMENTS OF WSEC TABLE C406.1, CODE SECTION NUMBER 1, MORE EFFICIENT HVAC PERFORMANCE.

SPLIT AC CONDENSING UNIT SCHEDULE

UNIT #	MITSUBISHI MODEL NO.	TOTAL MBH	SENS MBH	EER/ SEER	ELECTRICAL VOLT/PH	ELECTRICAL MCA	CONTROL	WT LBS	NOTES
SCU-R-01	PUY-A42NKA7	42.0	31.9	11.6 / 21.5	208/1	25.0	24V	211	NEW, 1, 2
SCU-R-02	PUY-A24NHA7	24.0	16.3	12.2 / 21.3	208/1	19.0	24V	151	NEW, 1, 2
SCU-R-03	PUY-A18NKA7	18.0	13.1	10.7 / 20.2	208/1	11.0	24V	99	NEW, 1, 2

NOTES:
1. ELECTRICAL CONTRACTOR TO PROVIDE AND INSTALL ELECTRICAL DISCONNECT
2. UNIT MEETS THE MINIMUM EFFICIENY REQUIREMENTS PER WSEC TABLE C403.3.2

SPLIT DX FAN COIL UNIT SCHEDULE

UNIT NO.	AREA SERVED	ASSOCIATED CU	MITSUBISHI MODEL NO.	BLOWER CFM	BLOWER ESP	BLOWER HP	OSA CFM	ELECTRICAL VOLT/PH	ELECTRICAL MCA	CONTROL	WT LBS	NOTES
SFCU-01-01	COMM ROOM 104	SCU-R-01	PLA-A42EA8	1100	0.6	145W	-	208/1	2.0	24V	57	NEW,1-4
SFCU-02-01	SECURITY 103	SCU-R-02	PKA-A24KA8	705	0.6	69W	-	208/1	1.0	24V	46	NEW,1-4
SFCU-03-01	IDF 121	SCU-R-03	PKA-A18LA1	450	0.6	30W	-	208/1	1.0	24V	28	NEW,1-4

NOTES:
1. ECM MOTOR, TXV KIT.
2. NO ECONOMIZER PER WSEC 403.5 EXCEPTION 11 OPTION A; EQUIPMENT SERVING SERVER ROOM THAT IS PROVIDED WITH +15% PREMIUM EFFICIENCY. SEE CONDENSING UNIT...
3. FIELD ROUTE CONDENSATE TO NEAREST DRAIN. PROVIDE CONDENSATE PUMP AS NECESSARY. POWER BY E.C.
4. INSTALLATION OF REFRIGERANT PIPING PER MANUFACTURER RECOMMENDATIONS.

VRF BRANCH CONTROLLER UNIT SCHEDULE

UNIT NO.	AREA SERVED	MITSUBISHI MODEL NO.	CONNECTED VRF CU	NUMBER OF PORTS	ELECTRICAL VOLT/PH	ELECTRICAL MCA	WT LBS	NOTES
BC-01-01	OTC NORTH	CMB-P108NU-JA1-BV	CU-R-01	8	208/1	0.8	106	NEW, 1-2
BC-01-02	OTC EAST	CMB-P108NU-JA1-BV	CU-R-02	8	208/1	0.8	106	NEW, 1-2
BC-01-03	OTC SOUTH	CMB-P1016NU-KA1-BV	CU-R-03	16	208/1	1.6	153	NEW, 1-2
BC-01-04	OTC WEST	CMB-P1016NU-KA1-BV	CU-R-04	16	208/1	1.6	153	NEW, 1-2

NOTES:
1. PROVIDE WITH BALL VALVES ON ALL PORTS
2. FIELD ROUTE CONDENSATE TO NEAREST DRAIN. PROVIDE CONDENSATE PUMP AS NECESSARY. POWER BY E.C.

VRF HEAT PUMP - FAN COIL UNIT SCHEDULE

UNIT NO.	AREA SERVED	MITSUBISHI MODEL NO.	CONNECTED BC UNIT	COOLING MBH TOTAL	COOLING MBH SENS	HEATING MBH	BLOWER CFM	BLOWER ESP	BLOWER HP (KW)	ELECTRICAL VOLT/PH	ELECTRICAL MCA	CONTROL	WT LBS	NOTES
FCU-01-01	ZONE 1	PEFY-P96NMHSU-E	BC-01-01	89.3	70.9	55.4	2965	1	-	208/1	8.2	24V	221	NEW, 1-4
FCU-01-02	ZONE 2	PEFY-P24NMAU-E4	BC-01-01	22.3	19	15.2	880	0.6	0.12	208/1	2.88	24V	67	NEW, 1-4
FCU-01-03	ZONE 3	PEFY-P24NMAU-E4	BC-01-01	22.3	19	15.2	880	0.6	0.12	208/1	2.88	24V	67	NEW, 1-4
FCU-01-04	ZONE 4	PEFY-P30NMAU-E4	BC-01-01	27.9	21.4	20.1	880	0.6	0.08	208/1	2.88	24V	47	NEW, 1-4
FCU-01-05	ZONE 13	PEFY-P06NMAU-E4	BC-01-01	5.5	5.5	3.7	300	0.6	0.08	208/1	8.2	24V	47	NEW, 1-4
FCU-02-01	ZONE 5	PEFY-P48NMAU-E4	BC-01-02	44.6	33.5	46.9	1305	0.6	0.3	208/1	4.38	24V	86	NEW, 1-4
FCU-02-02	ZONE 6	PEFY-P15NMAU-E4	BC-01-02	13.9	11.2	10	490	0.6	0.12	208/1	2.88	24V	58	NEW, 1-4
FCU-02-03	ZONE 7	PEFY-P72NMHSU-E	BC-01-02	66.9	56.3	45	2540	1	-	208/1	7.7	24V	214	NEW, 1-4
FCU-02-04	ZONE 15	PEFY-P24NMAU-E4	BC-01-02	22.3	19	15.2	880	0.6	0.12	208/1	2.88	24V	67	NEW, 1-4
FCU-02-05	ZONE 16	PEFY-P18NMAU-E4	BC-01-02	16.8	13.6	17.3	600	0.6	0.121	208/1	2.94	24V	58	NEW, 1-4
FCU-03-01	ZONE 8	PEFY-P96NMHSU-E	BC-01-03	89.3	70.9	55.4	2965	1	-	208/1	8.2	24V	221	NEW, 1-4
FCU-03-02	ZONE 8	PEFY-P96NMHSU-E	BC-01-03	89.3	70.9	55.4	2965	1	-	208/1	8.2	24V	221	NEW, 1-4
FCU-03-03	ZONE 8	PEFY-P96NMHSU-E	BC-01-03	89.3	70.9	55.4	2965	1	-	208/1	8.2	24V	221	NEW, 1-4
FCU-03-04	ZONE 8	PEFY-P96NMHSU-E	BC-01-03	89.3	70.9	55.4	2965	1	-	208/1	8.2	24V	221	NEW, 1-4
FCU-04-01	ZONE 9	PEFY-P36NMAU-E4	BC-01-04	33.4	28.1	31.4	1270	0.6	0.3	208/1	4.25	24V	84	NEW, 1-4
FCU-04-02	ZONE 10	PEFY-P96NMHSU-E	BC-01-04	89.3	70.9	55.4	2965	1	-	208/1	8.2	24V	221	NEW, 1-4
FCU-04-03	ZONE 11	PEFY-P48NMAU-E4	BC-01-04	44.6	33.5	46.9	1305	0.6	0.3	208/1	4.38	24V	86	NEW, 1-4
FCU-04-04	ZONE 12	PEFY-P72NMHSU-E	BC-01-04	89.3	56.3	45	2540	1	-	208/1	7.7	24V	214	NEW, 1-4
FCU-04-05	ZONE 12	PEFY-P72NMHSU-E	BC-01-04	66.9	56.3	45	2540	1	-	208/1	7.7	24V	214	NEW, 1-4
FCU-04-06	ZONE 14	PEFY-P54NMAU-E4	BC-01-04	50.2	37.9	47.1	1410	0.6	0.3	208/1	4.38	24V	91	NEW, 1-4
FCU-05-01	ELECTRICAL	PEFY-P96NMHSU-E	-	89.3	70.9	55.4	2965	1	-	208/1	8.2	24V	221	NEW, 1,3-5
FCU-06-01	CONTROL HOUSE	PEFY-P96NMHSU-E	-	89.3	70.9	55.4	2965	1	-	230/1	8.2	24V	221	NEW, 1-4

NOTES:
1. PROVIDE WITH BUILT-IN CONDENSATE LIFT AND CONDENSATE OVERFLOW SENSOR.
2. NO ECONOMIZER PER WSEC C403.5 EXCEPTION 9, DOAS UNIT WITH ENERGY RECOVERY PROVIDED.
3. FIELD ROUTE CONDENSATE TO NEAREST DRAIN. PROVIDE CONDENSATE PUMP AS NECESSARY. POWER BY E.C.
4. INSTALLATION OF REFRIGERANT PIPING PER MANUFACTURER RECOMMENDATIONS.
5. NO ECONOMIZER PER WSEC C403.5 EXCEPTION 11 OPTION A, EQUIPMENT TO COOL DEDICATED ELECTRONIC EQUIPMENT ROOM WITH +15% EFFICIENCY PREMIUM.

LOUVER SCHEDULE

UNIT NO.	UNIT SERVED	MFG & MODEL NO.	DIMENSIONS	CFM	VELOCITY	SP DROP	FREE AREA	NUMBER OF SECTIONS	NOTES
L-06-01	DOAS-06-01 OUTSIDE AIR	RUSKIN L375D	18x12	225	417	0.035	0.54	1	NEW, 1
L-06-02	DOAS-06-01 EXHAUST AIR	RUSKIN L375D	18x12	225	417	0.030	0.54	1	NEW, 1
L-06-03	COMPRESSOR BUILDING	RUSKIN L375D	120x84	25000	624	0.070	40.04	1	NEW, 1
L-06-04	VILLAGE BUILDING INTAKE	RUSKIN L375D	12x12	100	357	0.005	0.28	1	NEW, 1
L-06-05	VILLAGE BUILDING INTAKE	RUSKIN L375D	12x12	100	357	0.005	0.28	1	NEW, 1
L-06-06	VILLAGE BUILDING INTAKE	RUSKIN L375D	12x12	100	357	0.005	0.28	1	NEW, 1
L-06-07	VILLAGE BUILDING INTAKE	RUSKIN L375D	12x12	100	357	0.005	0.28	1	NEW, 1
L-06-08	VILLAGE BUILDING INTAKE	RUSKIN L375D	12x12	100	357	0.005	0.28	1	NEW, 1
L-06-09	VILLAGE BUILDING INTAKE	RUSKIN L375D	12x12	100	357	0.005	0.28	1	NEW, 1
L-06-10	VILLAGE BUILDING INTAKE	RUSKIN L375D	12x12	100	357	0.005	0.28	1	NEW, 1
L-06-11	VILLAGE BUILDING INTAKE	RUSKIN L375D	12x12	100	357	0.005	0.28	1	NEW, 1
L-06-12	VILLAGE BUILDING INTAKE	RUSKIN L375D	12x12	100	357	0.005	0.28	1	NEW, 1
L-06-13	VILLAGE BUILDING INTAKE	RUSKIN L375D	12x12	100	357	0.005	0.28	1	NEW, 1
L-06-14	VILLAGE BUILDING INTAKE	RUSKIN L375D	12x12	100	357	0.005	0.28	1	NEW, 1
L-06-15	VILLAGE BUILDING INTAKE	RUSKIN L375D	12x12	100	357	0.005	0.28	1	NEW, 1
L-06-16	VILLAGE BUILDING INTAKE	RUSKIN L375D	12x12	100	357	0.005	0.28	1	NEW, 1
L-06-17	VILLAGE BUILDING INTAKE	RUSKIN L375D	12x12	100	357	0.005	0.28	1	NEW, 1
L-06-18	VILLAGE BUILDING INTAKE	RUSKIN L375D	12x12	100	357	0.005	0.28	1	NEW, 1
L-06-19	VILLAGE BUILDING INTAKE	RUSKIN L375D	12x12	100	357	0.005	0.28	1	NEW, 1
L-06-20	VILLAGE BUILDING INTAKE	RUSKIN L375D	12x12	100	357	0.005	0.28	1	NEW, 1
L-06-21	VILLAGE BUILDING INTAKE	RUSKIN L375D	12x12	100	357	0.005	0.28	1	NEW, 1
L-06-22	VILLAGE BUILDINGS RELIEF	RUSKIN L375D	12x12	100	357	0.005	0.28	1	NEW, 1
L-06-23	VILLAGE BUILDINGS RELIEF	RUSKIN L375D	12x12	100	357	0.005	0.28	1	NEW, 1
L-06-24	VILLAGE BUILDINGS RELIEF	RUSKIN L375D	12x12	100	357	0.005	0.28	1	NEW, 1
L-06-25	VILLAGE BUILDINGS RELIEF	RUSKIN L375D	12x12	100	357	0.005	0.28	1	NEW, 1
L-06-26	VILLAGE BUILDINGS RELIEF	RUSKIN L375D	12x12	100	357	0.005	0.28	1	NEW, 1
L-06-27	VILLAGE BUILDINGS RELIEF	RUSKIN L375D	12x12	100	357	0.005	0.28	1	NEW, 1
L-06-28	VILLAGE BUILDINGS RELIEF	RUSKIN L375D	12x12	100	357	0.005	0.28	1	NEW, 1
L-06-29	VILLAGE BUILDINGS RELIEF	RUSKIN L375D	12x12	100	357	0.005	0.28	1	NEW, 1

NOTES:
1. NEW LOUVER. CONFIRM STYLE WITH ARCHITECT.

01/26/24 11:51:10

PRCNC20240216

MacDonald-Miller
FACILITY SOLUTIONS
17930 Intl. Blvd. Suite. 120 SeaTac. WA 98188
Phone: 206-763-9400 www.macmiller.com

GEORGE M. GRAHAM — STATE OF WASHINGTON — 39332 — REGISTERED PROFESSIONAL ENGINEER

2/1/2024

DATE:	REVIT CLOUD DESCRIPTION:
12/08/23	Permit Set
09/22/23	100% Design Development

REVISIONS:

City of Puyallup
Development & Permitting Services
ISSUED PERMIT
Building | Planning | Engineering | Public Works | Fire | Traffic

PSE - OPERATIONAL TRAINING CENTER
325 TODD ROAD NW
PUYALLUP, WA 98371

HVAC SCHEDULES
MECHANICAL
100% CD SET

ENGINEER: G. Townsend
LAST REVISED: 1/26/2024
CHECKED BY: G. Graham
DATE PLOTTED: 1/26/2024
BIM: A. Perez
ISSUE DATE: 1/26/2024
PROJECT NUMBER: 7222-5111-00
SHEET NUMBER: M0.03

DPS STAMP

Autodesk Docs://7222 - 5111 - PSE North Bend Precon Design/7222r5111_ARCH_MAP_PSE-OTC_R22.rvt

GAS APPLIANCE FIXTURE SCHEDULE

UNIT NO.	GAS APPLIANCE FIXTURE TYPE	FIXTURE LOCATION	FIXTURE AREA #	GAS APPLIANCE MFG & MODEL NO.	GAS INPUT (MBH)	GAS OUTPUT (MBH)	GAS CONN SIZE	GAS FLUE SIZE	ELEC. V/PH	NOTES
RNG-1	RANGE	APPLIANCE LAB	BAY 1	BOSCH HGIP056UC	48	38	3/4"	8"	120/1	NEW, 2
GF-2	FURNACE	APPLIANCE LAB	BAY 2	WHIRLPOOL FURNACE	48	38	3/4"	8"	120/1	EXIST, 1
GWH-2	WATER HEATER	APPLIANCE LAB	BAY 2	RUDD/ RHEEM G75-125	38	36	3/4"	8"	120/1	EXIST, 1
GF-3	FURNACE	APPLIANCE LAB	BAY 3	TRANE S9V2B040D3	48	38	3/4"	8"	120/1	NEW, 2-4
GWH-3	WATER HEATER	APPLIANCE LAB	BAY 3	AO SMITH GPVL-40	40	38	3/4"	8"	120/1	NEW, 2
GF-4	FURNACE	APPLIANCE LAB	BAY 4	RHEEM CLASSIC 90 PLUS RGRK-06EMSES	48	38	3/4"	8"	120/1	EXIST, 1
GWH-4	WATER HEATER	APPLIANCE LAB	BAY 4	RHEEM PROG50-38U RH62 EC1	38	36	3/4"	8"	120/1	NEW, 2
GF-5	FURNACE	APPLIANCE LAB	BAY 5	REVOLV MG1E-056A	48	38	3/4"	8"	240/1	NEW, 2,3
GWH-5	WATER HEATER	APPLIANCE LAB	BAY 5	GE GG40S12BXR	38	36	3/4"	8"	240/1	NEW, 2
RNG-5	RANGE	APPLIANCE LAB	BAY 5	WHIRLPOOL WFG320M0BS	48	38	3/4"	8"	240/1	NEW, 2
DRY-5	DRYER	APPLIANCE LAB	BAY 5	WHIRLPOOL WGD4950HW	48	38	3/4"	8"	240/1	NEW, 2
GF-6	FURNACE	APPLIANCE LAB	BAY 6	PAYNE PLUS 80 395CAV036090	48	38	3/4"	8"	120/1	EXIST, 1
GWH-6	WATER HEATER	APPLIANCE LAB	BAY 6	BRADFORD WHITE M450362FBN	38	36	3/4"	8"	120/1	EXIST, 1
GF-7	FURNACE	APPLIANCE LAB	BAY 7	LENNOX ML296V	48	38	3/4"	8"	120/1	NEW, 2,3
GWH-7	WATER HEATER	APPLIANCE LAB	BAY 7	GE GG50T10BXR	40	38	3/4"	8"	120/1	NEW, 2
GF-8	FURNACE	APPLIANCE LAB	BAY 8	LENNOX ELITE SERIES G50DF-36B-090-09	48	38	3/4"	8"	120/1	EXIST, 1
GWH-8	WATER HEATER	APPLIANCE LAB	BAY 8	RHEEM 42vr50-40F	38	36	3/4"	8"	120/1	EXIST, 1
GH-9	UNIT HEATER	APPLIANCE LAB	BAY 9	REZNOR UDX-30	48	38	3/4"	8"	120/1	NEW, 2,3
GWH-9	WATER HEATER	APPLIANCE LAB	BAY 9	AO SMITH BTH-120A	120	114	3/4"	8"	120/1	NEW, 2
GF-10	FURNACE	APPLIANCE LAB	BAY 10	WILLIAMS 4505622A	48	38	3/4"	8"	120/1	NEW, 2,3
GWH-10	WATER HEATER (TANKLESS)	APPLIANCE LAB	BAY 10	BOSCH 940 ES NG	38	36	3/4"	8"	120/1	NEW, 2
GF-11	FURNACE	APPLIANCE LAB	BAY 11	LENNOX GH6-80M	48	38	3/4"	8"	120/1	EXIST, 1
GWH-11	WATER HEATER	APPLIANCE LAB	BAY 11	RHEEM 21DUV50-38	40	38	3/4"	8"	120/1	EXIST, 1
FIRE-12	FIREPLACE	APPLIANCE LAB	BAY 12	DULUTH FORGE FD132M-AW	48	38	3/4"	8"	120/1	NEW, 2
GH-12	HEATER	APPLIANCE LAB	BAY 12	WILLIAMS 5001922	48	38	3/4"	8"	120/1	EXIST, 1
GF-13	FURNACE	APPLIANCE LAB	BAY 13	RUUD DELUXE UGAC-08EA	48	38	3/4"	8"	120/1	EXIST, 1
GWH-13	WATER HEATER	APPLIANCE LAB	BAY 13	AO SMITH GCVL40100	40	38	3/4"	8"	120/1	EXIST, 1
GF-14	FURNACE	APPLIANCE LAB	BAY 14	GOODMAN GCES800403AN	48	38	3/4"	8"	120/1	NEW, 2,3
GWH-14	WATER HEATER	APPLIANCE LAB	BAY 14	RELIANCE 6 50 NBRT	199	189	3/4"	8"	120/1	NEW, 2
GF-15	FURNACE	APPLIANCE LAB	BAY 15	PAYNE 395BAW020460	48	38	3/4"	8"	120/1	EXIST, 1
GWH-15	WATER HEATER	APPLIANCE LAB	BAY 15	AO SMITH FSG40248	38	36	3/4"	8"	120/1	EXIST, 1
GF-16	FURNACE	APPLIANCE LAB	BAY 16	BRYANT 915SB420606E17	48	38	3/4"	8"	120/1	NEW, 2,3
GWH-16	WATER HEATER (TANKLESS)	APPLIANCE LAB	BAY 16	TAKAGI T-H3M-IN-NG	40	38	3/4"	8"	120/1	NEW, 2
GF-17	FURNACE	APPLIANCE LAB	BAY 17	BRYANT 355AAV060100FASA	48	38	3/4"	8"	120/1	EXIST, 1
GWH-17	WATER HEATER (TANKLESS)	APPLIANCE LAB	BAY 17	HTP RT-199	30	29	3/4"	8"	120/1	EXIST, 1
GF-18	FURNACE	APPLIANCE LAB	BAY 18	YORK TMBE080B12MP11	48	38	3/4"	8"	120/1	NEW, 2
GWH-18	WATER HEATER	APPLIANCE LAB	BAY 18	RHEEM PROG40-40NRH67 PV	120	114	3/4"	8"	120/1	NEW, 2
GF-19	FURNACE	APPLIANCE LAB	BAY 19	CARRIER 58CTA070-12	48	38	3/4"	8"	120/1	EXIST, 1
GWH-19	WATER HEATER	APPLIANCE LAB	BAY 19	GE PG40T09AVH00	199	189	3/4"	8"	120/1	EXIST, 1
GF-20	FURNACE	APPLIANCE LAB	BAY 20	GOODMAN GMVM970603BN	48	38	3/4"	8"	120/1	NEW, 2,3
FIRE-20	FIREPLACE	APPLIANCE LAB	BAY 20	MONESSES GG24NIF	48	38	3/4"	8"	120/1	NEW, 2,3
GF-21A	FURNACE	APPLIANCE LAB	BAY 21	CARRIER 59CU5A	48	38	3/4"	8"	120/1	NEW, 2,3
GF-21B	FURNACE	APPLIANCE LAB	BAY 21	GOODMAN GMS80604BXBE	48	38	3/4"	8"	120/1	NEW, 2,3
GF-22	FURNACE	APPLIANCE LAB	BAY 22	WILLIAMS T167-10-1 (CONVERTED OIL FURN)	48	38	3/4"	8"	120/1	EXIST, 1
	BOILER	APPLIANCE LAB	BAY 23	BURNHAM X-205N-TH	48	38	3/4"	8"	120/1	NEW, 2,3
	PUMP	APPLIANCE LAB	BAY 23	GRUNDFOS UP15-18BUC5	-	-	-	-	-	NEW, 2
	PRESS REDUCING VALVE	APPLIANCE LAB	BAY 23	BELL & GOSSETT FB-38	-	-	-	-	-	NEW, 2
GB-23	AUTO AIR VENT	APPLIANCE LAB	BAY 23	CALEFFI 551004A	-	-	-	-	-	NEW, 2
	CHECK VALVE	APPLIANCE LAB	BAY 23	BLUEFIN	-	-	-	-	-	NEW, 2
	EXPANSION TANK	APPLIANCE LAB	BAY 23	AMTROL EX-90	-	-	-	-	-	NEW, 2
	RADIATOR	APPLIANCE LAB	BAY 23	BUDERUS 21	-	-	-	-	-	NEW, 2
GWH-24	WATER HEATER	APPLIANCE LAB	BAY 24	RHEEM PROG29-30U RH63 EC1-1	120	114	3/4"	8"	120/1	NEW, 2
RNG-24	RANGE	APPLIANCE LAB	BAY 24	WHIRLPOOL	48	38	3/4"	8"	120/1	EXIST, 1,3
OV-GF-1	FURNACE	OD VILLAGE	103	WILLIAMS 4007332	48	38	3/4"	8"	120/1	NEW, 2
OV-GF-2	FURNACE	OD VILLAGE	101	CARRIER 58TP0A	48	38	3/4"	8"	120/1	NEW, 2
OV-RNG-3	RANGE	OD VILLAGE	102	WHIRLPOOL WFG320M0BS	48	38	3/4"	8"	120/1	NEW, 2
OV-DRY-4	DRYER	OD VILLAGE	104	MAYTAG MGDC465HW	48	38	3/4"	8"	120/1	NEW, 2
OV-GF-5	FURNACE	OD VILLAGE	201	HEIL N92ESN	48	38	3/4"	8"	120/1	NEW, 2
OV-GF-6	DIRECT VENT WALL FURNACE	OD VILLAGE	202	WILLIAMS 1403822	48	38	3/4"	8"	120/1	NEW, 2
OV-GF-7	FURNACE	OD VILLAGE	204	TRANE S9B1B040U3PSA	48	38	3/4"	8"	120/1	NEW, 2
OV-GF-8	FURNACE	OD VILLAGE	6502	GOODMAN GMES92	48	38	3/4"	8"	120/1	NEW, 2
OV-GH-9	HEATER	OD VILLAGE	301	WILLIAMS 3501522A	48	38	3/4"	8"	120/1	NEW, 2
OV-FIRE-10	FIREPLACE	OD VILLAGE	301	EMPIRE TAHOE DELUXE MILLIVOLT...	48	38	3/4"	8"	120/1	NEW, 2
OV-DRY-11	DRYER	OD VILLAGE	301	GE D42GASJWW	48	38	3/4"	8"	120/1	NEW, 2
OV-OHP-12	HEAT PUMP	OD VILLAGE	6502	GOODMAN GSZ160301	48	38	3/4"	8"	120/1	NEW, 2
OV-GF-13	FURNACE	OD VILLAGE	301	TRANE XC95M	48	38	3/4"	8"	120/1	NEW, 2
OV-GF-14	FURNACE	OD VILLAGE	6506	COLEMAN TM9M100C16MP12	48	38	3/4"	8"	120/1	NEW, 2
OV-GRD-15	GRIDDLE	OD VILLAGE	6510	AVANTCO CHEF SERIES CAG-24-MG	48	38	3/4"	8"	120/1	NEW, 2
OV-AHU-16	HVAC UNIT	OD VILLAGE	6507	CARRIER 48GCDM04	48	38	3/4"	8"	120/1	NEW, 2
OV-UH-17	UNIT HEATER	OD VILLAGE	6507	REZNOR UDZ30	48	38	3/4"	8"	120/1	NEW, 2
OV-RNG-18	RANGE	OD VILLAGE	6507	MAIN STREET EQUIPMENT E24-N	48	38	3/4"	8"	120/1	NEW, 2
OV-OVN-19	PIZZA OVEN	OD VILLAGE	6507	CROWN VERITY PZ-24-TT-NG	48	38	3/4"	8"	120/1	NEW, 2

NOTES:
1. OWNER SUPPLIED GAS APPLINACE RELOCATED FROM EXISTING PSE FACILITY, INSTALLED BY MMFS, WIRED AND POWERED BY ELECTRICAL CONTRACTOR.
2. OWNER SPECIFIED GAS APPLINACE. PROCURED AND INSTALLED BY MMFS, WIRED AND POWERED BY ELECTRICAL CONTRACTOR.
3. GAS APPLIANCE TO BE PROVIDED WITH A NEST THERMOSTAT.
4. GAS APPLIANCE TO BE PROVIDED WITH A TEMPERATURE SENSOR.

ACOUSTICAL ANALYSIS

UNIT #	EQUIP. RATED SOUND POWER (Dba)	ACOUSTIC ADD'N PER ARI 275-97	# OF REFLECTIVE SURFACES	EQUIP. LOCATION FACTOR	BARRIER SHIELDING FACTOR	SOUND PATH FACTOR	DISTANCE TO CLOSEST ADJACENT PROPERTY (FT.)	DISTANCE REDUCTION FACTOR	SOUND LEVEL @ ADJ. PROP. (dBA)	ZONING OF SENDING PROP.	ZONING OF REC'G PROP.	HOURS OF EQUIP. OPERATION	MAX. ALLOWABLE SOUND LEVEL (dBA)*
DOAS-R-01	83	0	0	0	0	0	90	37	**46**	COMM.	RES.	8:00am - 5:00pm	**60**
MUA-R-01	87	0	0	0	0	0	90	37	**50**	COMM.	RES.	8:00am - 5:00pm	**60**
CU-R-01	82	0	0	0	0	0	90	37	**45**	COMM.	RES.	8:00am - 5:00pm	**60**
CU-R-02	82	0	0	0	0	0	90	37	**45**	COMM.	RES.	8:00am - 5:00pm	**60**
CU-R-03	89	0	0	0	0	0	90	37	**52**	COMM.	RES.	8:00am - 5:00pm	**60**
CU-R-04	89	0	0	0	0	0	90	37	**52**	COMM.	RES.	8:00am - 5:00pm	**60**
CU-R-05	81	0	0	0	0	0	90	37	**44**	COMM.	RES.	8:00am - 5:00pm	**60**
CU-06-01	81	0	0	0	0	0	200	43	**38**	COMM.	RES.	8:00am - 5:00pm	**60**
SCU-R-01	52	0	0	0	0	0	90	37	**15**	COMM.	RES.	8:00am - 5:00pm	**60**
SCU-R-02	47	0	0	0	0	0	90	37	**10**	COMM.	RES.	8:00am - 5:00pm	**60**
SCU-R-03	47	0	0	0	0	0	90	37	**10**	COMM.	RES.	8:00am - 5:00pm	**60**
EF-R-01	81	0	0	0	0	0	90	37	**44**	COMM.	RES.	8:00am - 5:00pm	**60**

*** PER PUYALLUP MUNICIPAL CODE 6.16.020 & ARI-275**

RELIEF HOOD SCHEDULE

UNIT NO.	AREA SERVED	MFG & MODEL NO.	DIMENSIONS	SUPPLY CFM	SP LOSS	FACE VELOCITY (FPM)	THROAT VELOCITY (FPM)	COLLAR SIZE	WT LBS	NOTES
HD-R-01	APPLIANCE LAB RELIEF	GREENHECK FGR 36x36	54x48x19	4800	0.039	314	533	36x36	125	NEW, 1-3

NOTES:
1. GRAVITY INTAKE HOOD, ALUMINUM CONSTRUCTION
2. FACTORY PROVIDED BIRDSCREEN AT INTAKE OPENINGS
3. RAIN GUTTER

DCV - SINGLE DUCT VAV SUPPLY BOX SCHEDULE

UNIT NO.	MFG & MODEL NO.	SERVING	INLET SIZE	VALVE CFM MAX	VALVE CFM MIN	CONTROL	NOTES
VAVS-01-01	TITUS DESV10	ELECTRIC OPERATIONS TEST LAB	10	880	700	24V	NEW, 1-2
VAVS-01-02	TITUS DESV08	CLASSROOM A	8	330	120	24V	NEW, 1-2
VAVS-01-03	TITUS DESV08	CLASSROOM B	8	330	125	24V	NEW, 1-2
VAVS-01-04	TITUS DESV08	CLASSROOM C	8	475	160	24V	NEW, 1-2
VAVS-01-05	TITUS DESV06	OPEN OFFICE	6	275	120	24V	NEW, 1-2
VAVS-01-06	TITUS DESV08	BREAKROOM	8	335	100	24V	NEW, 1-2
VAVS-01-07	TITUS DESV10	APPLIANCE LAB	10	730	495	24V	NEW, 1-2
VAVS-01-08	TITUS DESV08	FITTING & INSTALLATION LAB	8	595	360	24V	NEW, 1-2
VAVS-01-09	TITUS DESV08	FLOW LAB	8	465	285	24V	NEW, 1-2
VAVS-01-10	TITUS DESV08	GAS OP TRAINING	8	510	360	24V	NEW, 1-2
VAVS-01-11	TITUS DESV06	GAS WORKER LAB	6	220	155	24V	NEW, 1-2
			SUPPLY TOTALS	5145	2980		

NOTES:
1. POWER WIRING AND DISCONNECT SWITCH BY ELECTRICAL CONTRACTOR.
2. 24V DAMPER ACTUATOR AND CONTROL WIRING BY CONTROLS CONTRACTOR.
3. FIBRE FREE INSULATION.

DCV - SINGLE DUCT VAV EXHAUST BOX SCHEDULE

UNIT NO.	MFG & MODEL NO.	SERVING	INLET SIZE	VALVE CFM MAX	VALVE CFM MIN	CONTROL	NOTES
VAVE-01-01	TITUS DESV12	DOAS-R-01	12	1600	660	24V	NEW, 1-2
VAVE-01-02	TITUS DESV12	DOAS-R-02	12	1600	660	24V	NEW, 1-2
				3200	1320		

NOTES:
1. POWER WIRING AND DISCONNECT SWITCH BY ELECTRICAL CONTRACTOR.
2. 24V DAMPER ACTUATOR AND CONTROL WIRING BY CONTROLS CONTRACTOR.
3. FIBRE FREE INSULATION

GAS PRESSURE REDUCING VALVE SCHEDULE

UNIT NO.	LOCATION	MANUFACTURER MODEL NO.	GAS SCFH	BODY TYPE	BODY SIZE	ORIFICE SIZE	VALVE ANGLE	INLET PRESS	OUTLET PRESS	SPRING COLOR	NOTES
GR-01-01	APPLIANCE LAB	SENSUS 243-12-2	3840	GLOBE	1-1/2"	3/4	30	1.5 PSI	7" WC	BLUE	NEW, 1-2

NOTES:
1. GAS PRESSURE REGULATOR SIZING BASED ON 2 PSI NATURAL GAS AT METER WITH A PRESSURE DROP TO 1.5 PSI AT PRESSURE REGULATOR AT FULL FLOW. AN OVER PRESSURIZATION DEVICE IS NOT REQUIRED.
2. GAS REGULATOR WITH FULL FLOW VENT, REQUIRES VENT TO EXTERIOR.

WALL MOUNT HEATER SCHEDULE

UNIT NO.	AREA SERVED	MFG & MODEL NO.	BTUH	VOLT/PH	AMPS	MT METHOD	NOTES
EH-01-01	EAST VESTIBULE	QMARK CWH1202DSF	6143	120/1	15	WALL MOUNT	NEW, 1-5
EH-01-02	FIRE RISER/MECH	QMARK CWH1151DSF	2560	120/1	6.3	WALL MOUNT	NEW, 1-5
EH-01-03	MECHANICAL	QMARK CWH1101DSF	3413	120/1	8.4	WALL MOUNT	NEW, 1-5
EH-01-04	SOUTHWEST VESTIBULE	QMARK CWH1101DSF	3413	120/1	8.4	WALL MOUNT	NEW, 1-5
EH-01-05	TOILET	QMARK CWH1202DSF	6143	120/1	15	WALL MOUNT	NEW, 1-5
EH-01-06	TOILET	QMARK CWH1202DSF	6143	120/1	15	WALL MOUNT	NEW, 1-5
EH-01-07	NORTHWEST VESTIBULE	QMARK CWH1202DSF	6143	120/1	15	WALL MOUNT	NEW, 1-5
EH-01-08	ICE MACHINE	QMARK CWH1101DSF	1706	120/1	4.2	WALL MOUNT	NEW, 1-5

NOTES:
1. DISCONNECT BY EC.
2. FINISH COLOR: WHITE
3. SHALLOW WALL BUILT-IN HEATER
4. PROVIDE WITH INTERNAL SINGLE-POL THERMOSTAT
5. PROVIDED BY MC, INSTALLED BY EC.

FAN SCHEDULE

UNIT NO.	AREA SERVED	MFG & MODEL NO.	TYPE	CFM	ESP	RPM	FLA	BHP	HP	VOLT/PH	BDD	WT LBS	NOTES
EF-R-01	APPLIANCE LAB	GREENHECK CUE-200-VG	ROOF MOUNT	4800	0.5	1017	12.5	1.13	2	208/1	Y	126	NEW, 1-5
SF-06-01	COMPRESSOR BLDG	GREENHECK SBS-2L36	SIDEWALL PROP	12500	0.25	569	3	1.43	1-1/2	460/3	N	132	NEW, 1,6
SF-06-02	COMPRESSOR BLDG	GREENHECK SBS-2L36	SIDEWALL PROP	12500	0.25	569	3	1.43	1-1/2	460/3	N	132	NEW, 1,6

NOTES:
1. POWER WIRING AND DISCONNECT SWITCH BY ELECTRICAL CONTRACTOR.
2. PROVIDED WITH INTEGRAL BACKDRAFT DAMPER.
3. PROVIDED WITH ECM.
4. FAN TO OPERATE WHEN SPACE IS OCCUPIED.
5. INTERLOCK WITH MOTORIZED DAMPER.
6. INTERLOCK FAN WITH AIR COMPRESSOR (AC-1)

CONSTANT AIR REGULATOR SCHEDULE

UNIT NO.	AREA SERVED	SYSTEM TYPE	NAILOR MODEL NO.	SIZE	CFM	CFM RANGE	PRESSURE DROP RANGE MAX (IN)	PRESSURE DROP RANGE MIN (IN)	WT LBS	NOTES
CAR-01-01	TOILET 131 & 132	EXHAUST AIR	CVR-SP	10"	240	175-295	0.8	0.2	10	NEW, 1
CAR-01-02	WAREHOUSE 138	OUTSIDE AIR	CVR-SP	6"	80	60-105	0.8	0.2	10	NEW, 1
CAR-01-03	WOMENS 119 / SHOWER 120	EXHAUST AIR	CVR-HP	10"	750	500-765	2.4	0.4	15	NEW, 1
CAR-01-04	MENS 117 / SHOWER 118	EXHAUST AIR	CVR-HP	10"	750	500-765	2.4	0.4	15	NEW, 1
CAR-01-05	JANITOR 116	EXHAUST AIR	CVR-SP	8"	100	60-105	0.8	0.2	10	NEW, 1
CAR-01-06	WORKROOM 110	EXHAUST AIR	CVR-SP	10"	250	175-295	0.8	0.2	10	NEW, 1
CAR-01-07	HALL 101A	OUTSIDE AIR	CVR-SP	8"	100	60-105	0.8	0.2	10	NEW, 1
CAR-01-08	WORKROOM 110	OUTSIDE AIR	CVR-SP	6"	100	60-105	0.8	0.2	10	NEW, 1
CAR-01-09	MOTHER'S ROOM 115	OUTSIDE AIR	CVR-SP	6"	50	30-60	0.8	0.2	10	NEW, 1
CAR-01-10	HUDDLE 113	OUTSIDE AIR	CVR-SP	6"	30	30-60	0.8	0.2	10	NEW, 1
CAR-01-11	CONFERENCE 112	OUTSIDE AIR	CVR-SP	6"	100	60-105	0.8	0.2	10	NEW, 1
CAR-01-12	FACILITIES 109	EXHAUST AIR	CVR-SP	8"	100	60-105	0.8	0.2	10	NEW, 1
CAR-01-13	BREAK ROOM 102	EXHAUST AIR	CVR-HP	10"	515	500-765	2.4	0.4	15	NEW, 1
CAR-01-14	WAREHOUSE 124	OUTSIDE AIR	CVR-SP	8"	120	105-175	0.8	0.2	10	NEW, 1

NOTES:
1. FLOW RANGE SET ON SITE BY MECHANICAL CONTRACTOR.

MacDonald-Miller FACILITY SOLUTIONS
17330 Intl. Blvd. Suite. 120 SeaTac, WA 98188
Phone: 206-763-9400 www.macmiller.com

PRCNC20240216

2/1/2024

REVISIONS:	DATE:
REVIT CLOUD DESCRIPTION:	
Permit Set	12/08/23
100% Design Development	09/22/23

City of Puyallup
Development & Permitting Services
ISSUED PERMIT
Building | Planning | Engineering | Public Works | Fire | Traffic

PSE - OPERATIONAL TRAINING CENTER
325 TODD ROAD NW
PUYALLUP, WA 98371

HVAC SCHEDULES
MECHANICAL

100% CD SET

ENGINEER: G. Townsend
LAST REVISED: 1/26/2024
CHECKED BY: G. Graham
DATE PLOTTED: 1/26/2024
BIM: A. Perez
ISSUE DATE: 1/26/2024
PROJECT NUMBER: 7222-5111-00
SHEET NUMBER: M0.04

01/26/24 11:51:14

Autodesk Docs://7222 - 5111 - PSE North Bend Precon Design/7222511_MKFS_MAP_PSE-OTC_R22.rvt

DESCRIPTION OF OPERATIONS

TYPICAL VRF HEAT PUMP WITH ENERGY RECOVERY AND INDOOR FAN COIL UNITS
SERVES: OTC BUILDING AND CONTROL HOUSE (ONLY CU-06-01 & FCU-06-01)
CONTROL TYPE: DDC SYSTEM
SPACE TEMPERATURE SETPOINTS: 74°F (COOLING), 70°F (HEATING) USER ADJUSTABLE
DDC SYSTEM INTERFACE: YES
NOTES: MITSUBISHI VRF HEAT PUMP SYSTEM CONTROLLED BY STANDALONE CONTROL SYSTEM THAT INTERFACES WITH BUILDING DDC SYSTEM.
SUMMARY: PROVIDES SPACE TEMPERATURE CONTROL. OUTDOOR UNITS WILL ENERGIZE THE REFRIGERATION LINES THAT WILL BE DISTRIBUTED TO THE INDOOR FAN COIL UNITS VIA BRANCH CONTROLLERS PER SYSTEM. THE FAN COIL WILL TRANSLATE THE ENERGY IN THE REFRIGERATION LINES TO PROVIDE SPACE TEMEPERATURE CONTROL.

DOAS-R-01: DEDICATED OUTSIDE AIR UNIT WITH ENERGY RECOVERY
SERVES: OTC BUILDING
CONTROL TYPE: DDC SYSTEM
LEAVING AIR TEMPERATURE SETPOINT: 63°F (USER ADJUSTABLE)
SUMMARY: DEDICATED OUTSIDE AIR UNIT TO PROVIDE VENTILATION REQUIREMENTS TO THE OTC BUILDING UTILIZING ENERGY RECOVERY. SUPPLEMENTAL ELECTRIC HEAT PROVIDED TO ACHIEVE A 55°F LAT DURING WHEN NECESSARY. OUTDOOR AIRFLOWS WILL BE MEASURED AT A SPACE-BY-SPACE LEVEL VIA A SINGLE DUCT VAV UNIT OR A CONSTANT AIR REGULATOR. THE SYSTEM IS PROVIDED WITH SYSTEM LEVEL OUTSIDE AIR AND RELIEF AIR DAMPERS. DAMPERS WILL MODULATE ACCORDINGLY TO MAINTAIN REQUIRED SYSTEM OPERATION.

DOAS-06-01: ENERGY RECOVERY VENTILATOR WITH ELECTRIC DUCT HEATER
SERVES: CONTROL HOUSE
CONTROL TYPE: STAND-ALONE
LEAVING AIR TEMPERATURE SETPOINT: 63°F (USER ADJUSTABLE)
SUMMARY: LOSSNAY ENERGY RECOVERY VENITLATOR TO PROVIDE VENTILIATION REQUIREMENTS TO THE CONTROL HOUSER. OSA AND EXHAUST MOTORIZED DAMPERS ARE OPEN WITH FAN OPERATING OCCUPIED HOURS. ELECTRIC DUCT HEATER WILL MODULATE HEATING AS REQUIRED TO MAINTAIN LAT.

TYPICAL DX FAN COIL SPLIT SYSTEMS
SERVES: SECURITY 103, COMM ROOM 104
CONTROL TYPE: DDC SYSTEM
SPACE TEMPERATURE SETPOINTS: 74°F (COOLING), 70°F (HEATING) USER ADJUSTABLE
SUMMARY: FANS SHALL RUN CONTINUOUSLY AND COMPRESSOR SHALL STAGE ON/OFF TO MEET THE SPACE TEMPERATURE SETPOINT LISTED ABOVE.

IDF ROOM COOLING ONLY SPLIT SYSTEM
SERVES: IDF 121
CONTROL TYPE: DDC SYSTEM
SPACE TEMPERATURE SETPOINTS: 80°F (COOLING)
SUMMARY: FANS SHALL RUN CONTINUOUSLY AND COMPRESSOR SHALL STAGE ON/OFF TO MEET THE SPACE TEMPERATURE SETPOINT LISTED ABOVE.

EF-R-01: GAS APPLIANCE LAB EXHAUST FAN
SERVES: FLUE EXHAUST IN GAS APPLIANCE LAB
CONTROL TYPE: DDC SYSTEM
SETPOINT: EXHAUST FAN WILL BE ON WHEN ROOM IS OCCUPIED.
SUMMARY: EXHAUST FAN WILL OPERATE AT DESIGN AIRFLOWS WHEN THE ROOM IS IN OCCUPIED MODE. THE FAN WILL OPERATE TO REMOVE THE FLUE EXHAUST FROM THE CONNECTED GAS APPLIANCES. THE MOTORIZED DAMPER WILL OPEN WHEN THE EXHAUST FAN IS IN OPERATION. THE MOTORIZED DAMPER WILL CLOSE WHEN THE UNIT IS OFF.

MUA-R-01: GAS APPLIANCE LAB MAKE-UP AIR UNIT
SERVES: MAKE-UP AIR FOR GAS APPLIANCE LAB.
CONTROL TYPE: DDC SYSTEM
LEAVING AIR TEMPERATURE SETPOINTS: 63°F (USER ADJUSTABLE)
NOTE: UNIT TO BE INTERLOCKED WITH EF-R-01 TO OPERATE AT THE SAME TIME.
SUMMARY: UNIT TO OPERATE AT DESIGN AIRFLOW TO PROVIDE MAKE-UP AIR FOR THE ROOM WHEN EF-R-01 IS OCCUPIED. THE UNIT WILL MODULATE BETWEEN HEATING AND COOLING AS REQUIRED TO MAINTAIN LAT. THE MOTORIZED DAMPER WILL OPEN WHEN THE MUA IS IN OPERATION. THE MOTORIZED DAMPER WILL CLOSE WHEN THE UNIT IS OFF.

TYPICAL ELECTRIC WALL MOUNT HEATER
SERVES: UNCONDITIONED PERIMETER SPACES
CONTROL TYPE: STAND-ALONE THERMOSTAT
SETPOINT: HEATING 60°F (USER ADJUSTABLE)
SUMMARY: ELECTRIC WALL HEATER WILL TURN ON WHEN A CALL FOR HEAT IS NECESSARY TO MAINTAIN THE SPACE TEMPERATURE IN THE ROOM. THE UNIT WILL SHUT OFF WHEN THE SETPOINT IS MET.

01/26/24 11:51:15

PRCNC20240216

MacDonald-Miller
FACILITY SOLUTIONS
17930 Intl. Blvd. Suite. 120 SeaTac, WA 98188
Phone: 206-763-9400 www.macmiller.com

GEORGE M. GRAHAM
STATE OF WASHINGTON
59332
REGISTERED
PROFESSIONAL ENGINEER

2/1/2024

REVISIONS:	DATE:
Permit Set	12/08/23
100% Design Development	09/22/23

REVIT CLOUD DESCRIPTION:

City of Puyallup
Development & Permitting Services
ISSUED PERMIT
Building | Planning
Engineering | Public Works
Fire | Traffic

PSE - OPERATIONAL TRAINING CENTER
325 TODD ROAD NW
PUYALLUP, WA 98371

HVAC SCHEDULES
MECHANICAL

100% CD SET

ENGINEER: G. Townsend
CHECKED BY: G. Graham
BIM: A. Perez
PROJECT NUMBER: 7222-5111-00
SHEET NUMBER: M0.05

LAST REVISED: 1/26/2024
DATE PLOTTED: 1/26/2024
ISSUE DATE: 1/26/2024

DPS STAMP

Autodesk Docs://7222 - 5111 - PSE North Bend Precon Design/7222511_MMFS_MAP_PSE-OTC_R22.rvt

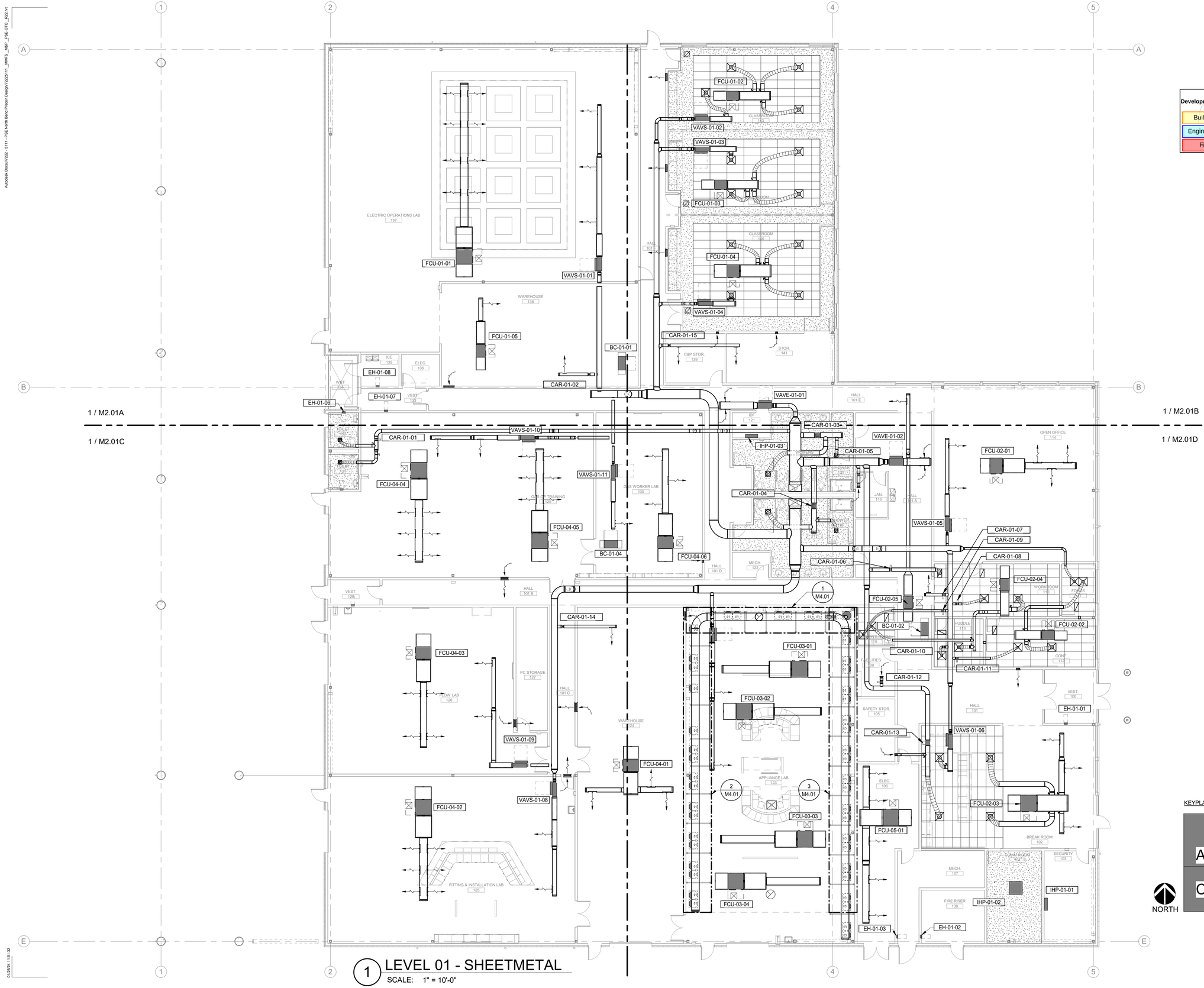

1 LEVEL 01 - SHEETMETAL

SCALE: 1" = 10'-0"

City of Puyallup
Development & Permitting Services
ISSUED PERMIT

Building	Planning
Engineering	Public Works
Fire	Traffic

PRCNC20240216

MacDonald-Miller
FACILITY SOLUTIONS
17330 Intl. Blvd. Suite. 120 SeaTac. WA 98188
Phone: 206-763-9400 www.macmiller.com

GEORGE M. GRAHAM
STATE OF WASHINGTON
39332
REGISTERED
PROFESSIONAL ENGINEER

2/1/2024

REVISIONS:	REVIT CLOUD DESCRIPTION:	DATE:
Permit Set	100% Design Development	12/08/23
		09/22/23

PSE - OPERATIONAL TRAINING CENTER
325 TODD ROAD NW
PUYALLUP, WA 98371

1ST FLOOR PLAN - MECHANICAL
MM TRADE
100% CD SET

ENGINEER: G. Townsend	LAST REVISED: 1/26/2024
CHECKED BY: G. Graham	DATE PLOTTED: 1/26/2024
BIM: A. Perez	ISSUE DATE: 1/26/2024
PROJECT NUMBER: 7222-5111-00	
SHEET NUMBER: M2.01	

KEYPLAN

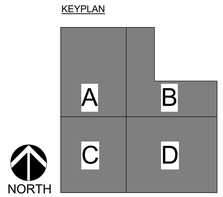

DRS STAMP

01/26/24 11:51:32

PRCNC20240216

City of Puyallup
Development & Permitting Services
ISSUED PERMIT

Building	Planning
Engineering	Public Works
Fire	Traffic

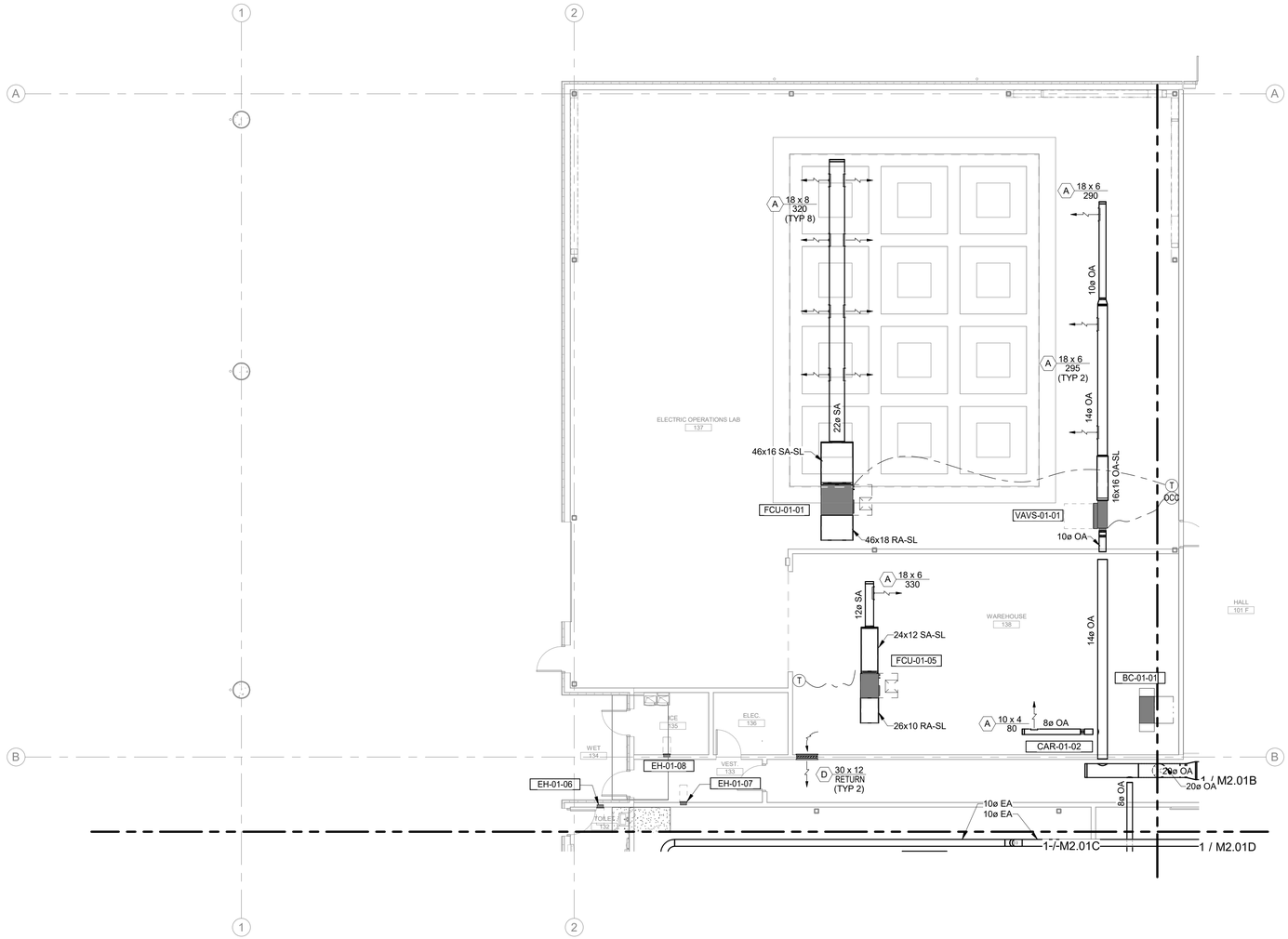

KEYPLAN

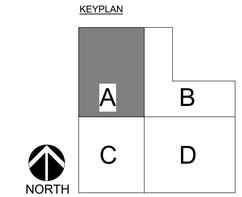

1 Level 01 - SHEETMETAL - SECTOR A
SCALE: 1/8" = 1'-0"

MacDonald-Miller
FACILITY SOLUTIONS
17930 Intl. Blvd. Suite 120 SeaTac, WA 98188
Phone: 206-763-9400 www.macmiller.com

2/1/2024

REVISIONS:	REVIT CLOUD DESCRIPTION:	DATE:
	Permit Set	12/08/23
	100% Design Development	09/22/23

PSE - OPERATIONAL TRAINING CENTER
325 TODD ROAD NW
PUYALLUP, WA 98371

1ST FLOOR SECTOR MECHANICAL
MECHANICAL
100% CD SET

ENGINEER: G. Townsend	LAST REVISED: 1/26/2024
CHECKED BY: G. Graham	DATE PLOTTED: 1/26/2024
BIM: A. Perez	ISSUE DATE: 1/26/2024
PROJECT NUMBER: 7222-5111-00	
SHEET NUMBER: M2.01A	

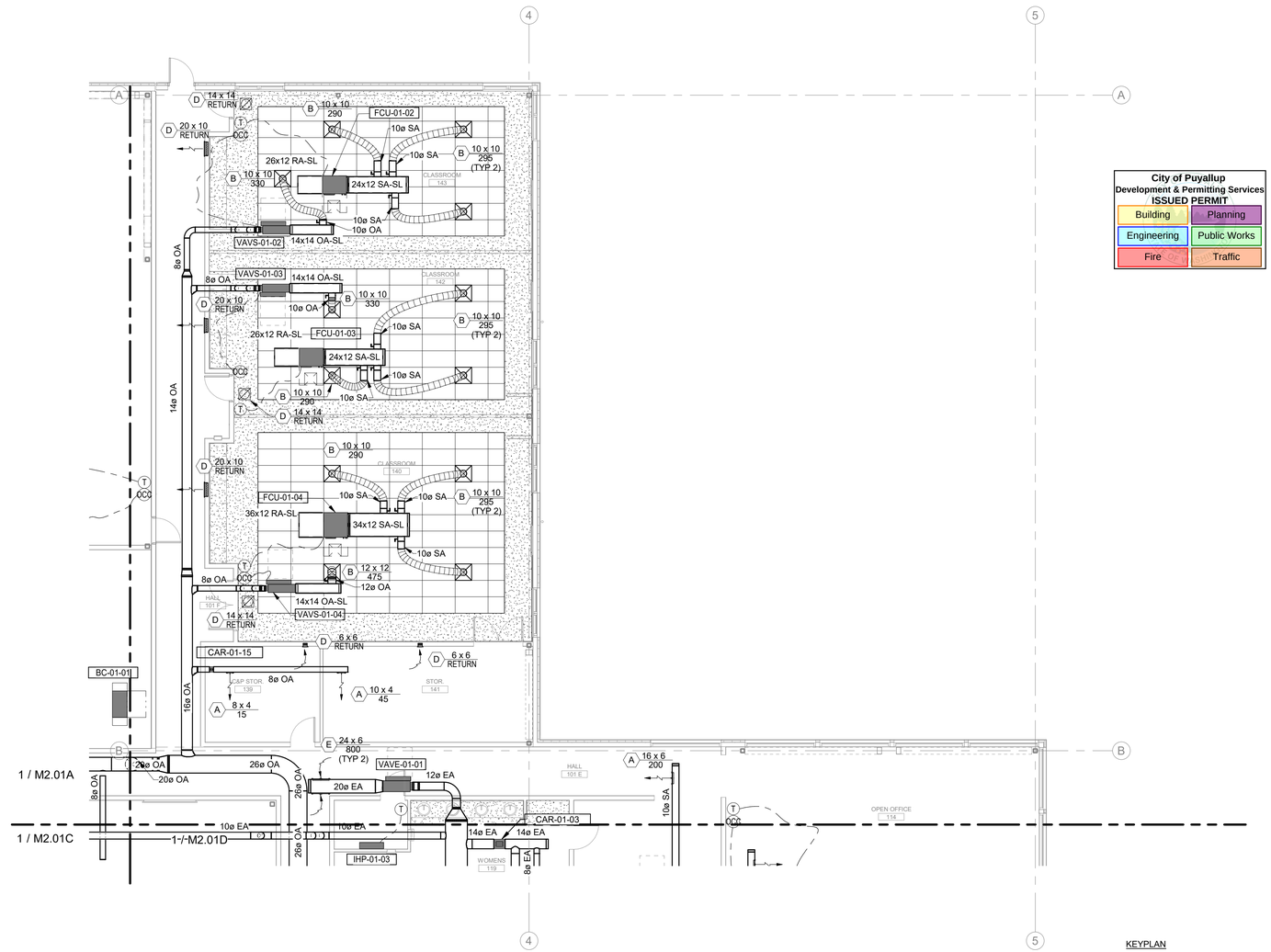

City of Puyallup
Development & Permitting Services
ISSUED PERMIT

Building	Planning
Engineering	Public Works
Fire	Traffic

KEYPLAN

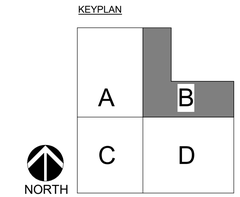

1 Level 01 - SHEETMETAL - SECTOR B
SCALE: 1/8" = 1'-0"

PRCNC20240216

MacDonald-Miller
FACILITY SOLUTIONS
17930 Intl. Blvd. Suite 120 SeaTac, WA 98188
Phone: 206-763-9400 www.macmiller.com

2/1/2024

REVISIONS:	REVIT CLOUD DESCRIPTION:	DATE:
	Permit Set	12/08/23
	100% Design Development	09/22/23

PSE - OPERATIONAL TRAINING CENTER
325 TODD ROAD NW
PUYALLUP, WA 98371

1ST FLOOR SECTOR MECHANICAL
MECHANICAL
100% CD SET

ENGINEER: G. Townsend	LAST REVISED: 1/26/2024
CHECKED BY: G. Graham	DATE PLOTTED: 1/26/2024
BIM: A. Perez	ISSUE DATE: 1/26/2024
PROJECT NUMBER: 7222-5111-00	
SHEET NUMBER: M2.01B	

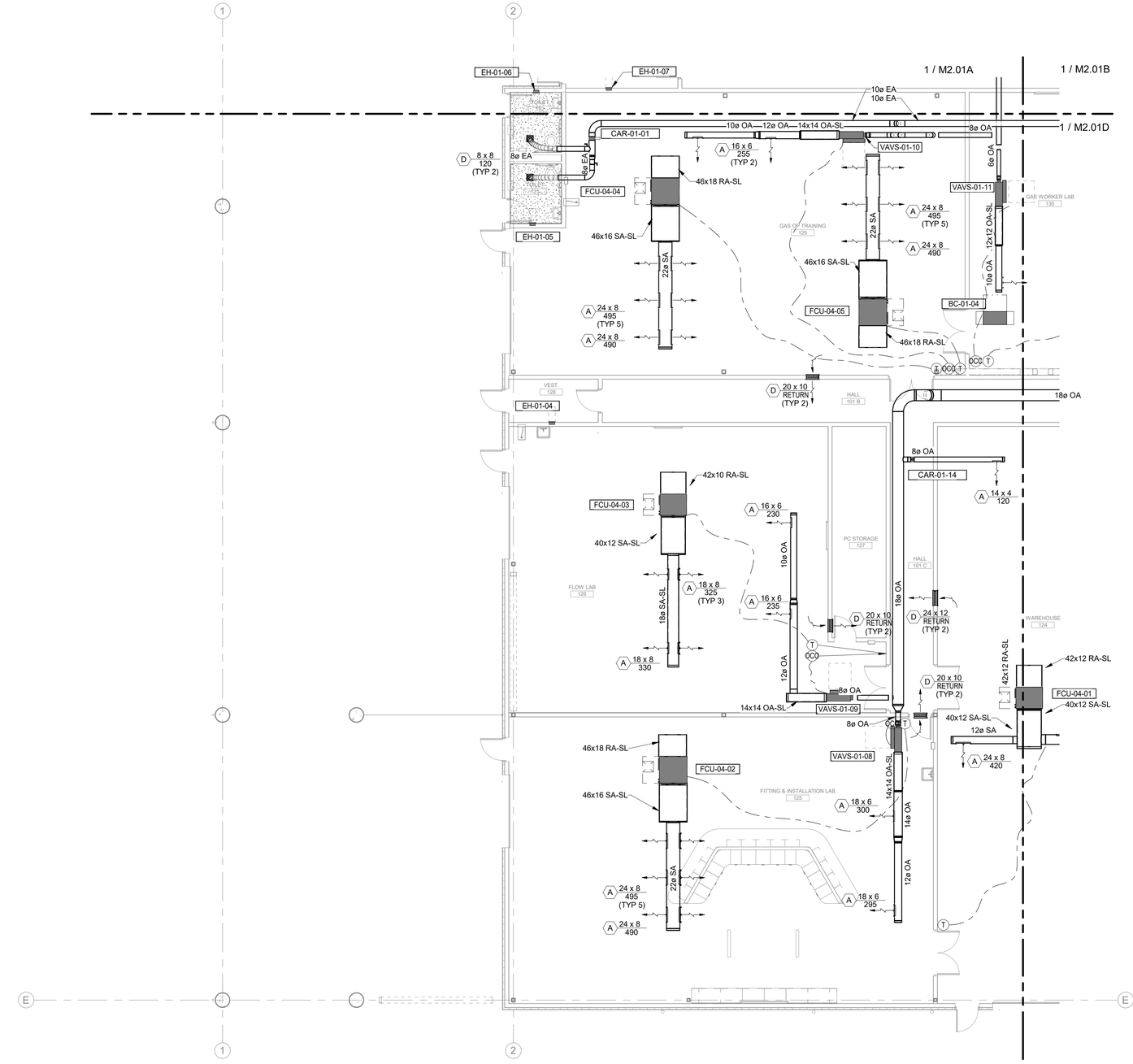

City of Puyallup
Development & Permitting Services
ISSUED PERMIT

Building	Planning
Engineering	Public Works
Fire	Traffic

KEYPLAN

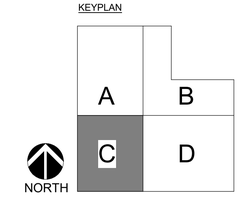

3 Level 01 - SHEETMETAL - SECTOR C
SCALE: 1/8" = 1'-0"

PRCNC20240216

MacDonald-Miller
FACILITY SOLUTIONS
17930 Intl. Blvd. Suite 120 SeaTac, WA 98188
Phone: 206-763-9400 www.macmiller.com

GEORGE M. GRAHAM
STATE OF WASHINGTON
53332
REGISTERED PROFESSIONAL ENGINEER
2/1/2024

REVISIONS:	REVIT CLOUD DESCRIPTION:	DATE:
	Permit Set	12/08/23
	100% Design Development	09/22/23

PSE - OPERATIONAL TRAINING CENTER
325 TODD ROAD NW
PUYALLUP, WA 98371

1ST FLOOR SECTOR MECHANICAL
MECHANICAL
100% CD SET

ENGINEER: G. Townsend	LAST REVISED: 1/26/2024
CHECKED BY: G. Graham	DATE PLOTTED: 1/26/2024
BIM: A. Perez	ISSUE DATE: 1/26/2024
PROJECT NUMBER: 7222-5111-00	
SHEET NUMBER: M2.01C	

DPD STAMP

PRCNC20240216

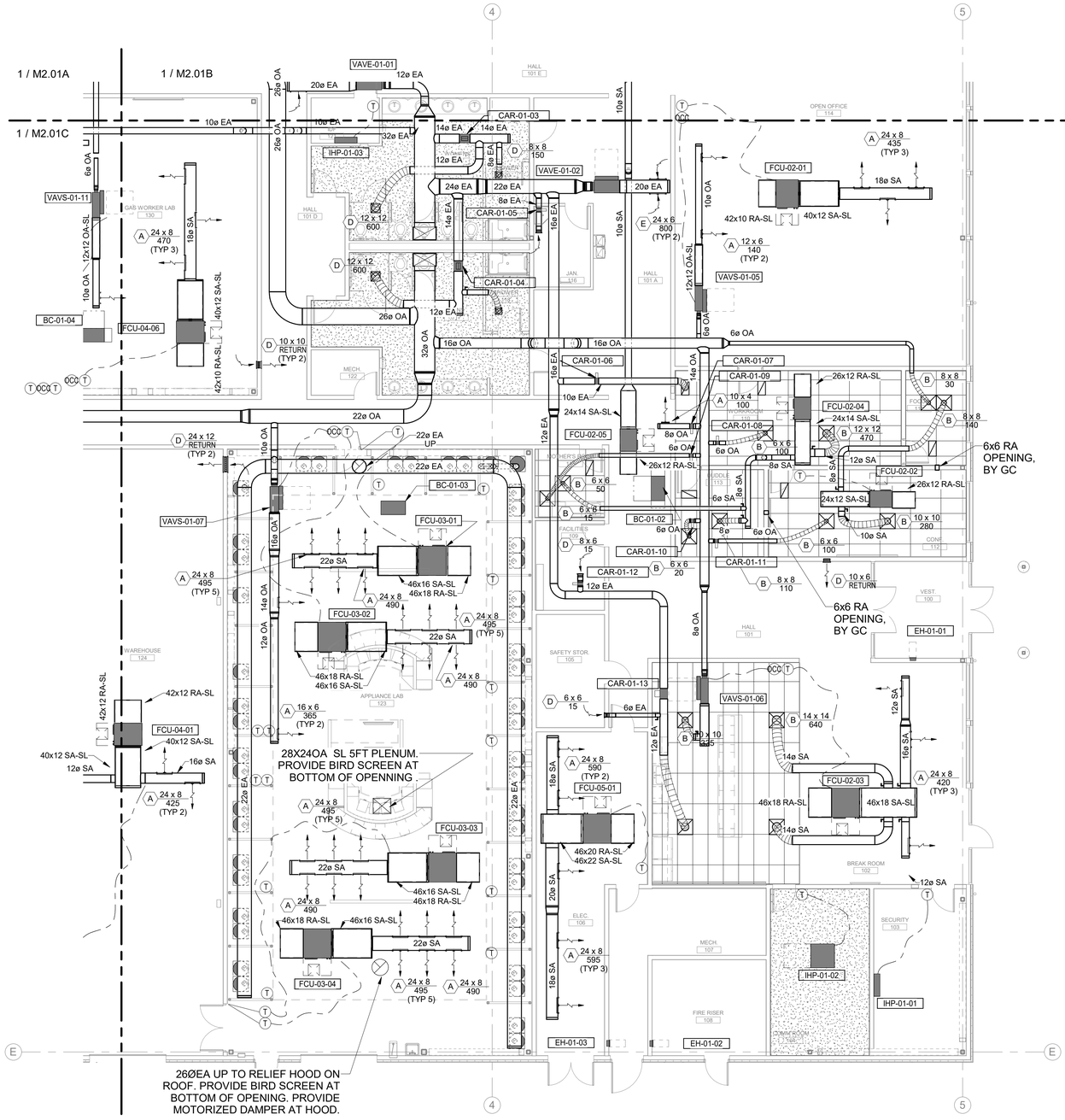

GENERAL NOTES:
1. FLUE VENTING IN GAS APPLIANCE LAB TO BE DURASEAL DSD MATERIAL. INSTALL PER MANUFACTURER'S REQUIREMENTS.

City of Puyallup
Development & Permitting Services
ISSUED PERMIT

Building	Planning
Engineering	Public Works
Fire	Traffic

KEYPLAN

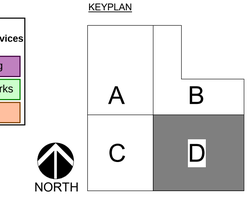

3 Level 01 - SHEETMETAL - SECTOR D
SCALE: 1/8" = 1'-0"

MacDonald-Miller
FACILITY SOLUTIONS
17930 Intl. Blvd. Suite 120 SeaTac, WA 98188
Phone: 206-763-9400 www.macmiller.com

2/1/2024

REVISIONS:		DATE:
	Permit Set	12/08/23
	100% Design Development	09/22/23

REVIT CLOUD DESCRIPTION:

PSE - OPERATIONAL TRAINING CENTER
325 TODD ROAD NW
PUYALLUP, WA 98371

1ST FLOOR SECTOR MECHANICAL
MECHANICAL
100% CD SET

ENGINEER: G. Townsend	LAST REVISED: 1/26/2024
CHECKED BY: G. Graham	DATE PLOTTED: 1/26/2024
BIM: A. Perez	ISSUE DATE: 1/26/2024
PROJECT NUMBER: 7222-5111-00	
SHEET NUMBER: M2.01D	

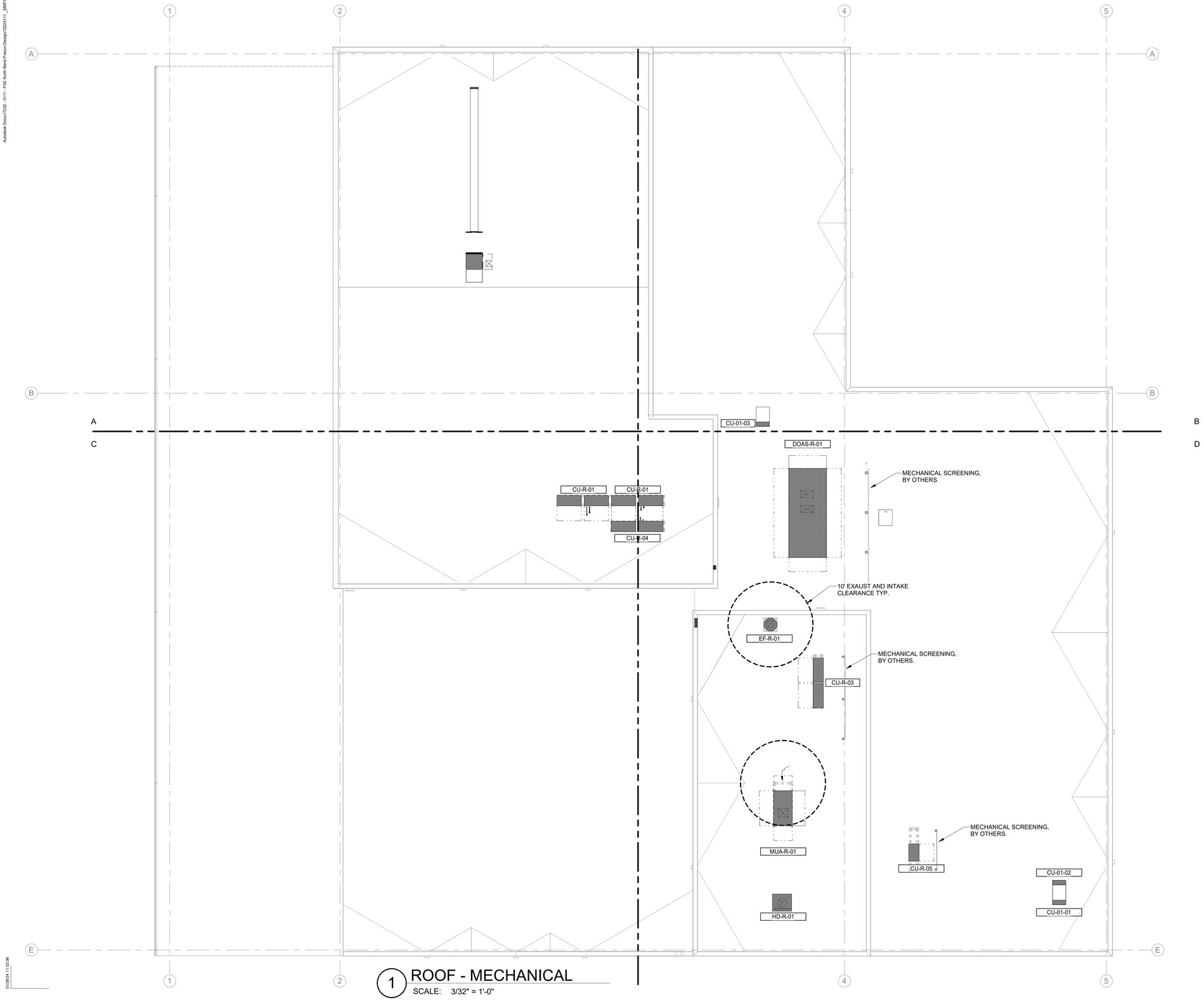

1 ROOF - MECHANICAL
SCALE: 3/32" = 1'-0"

City of Puyallup
Development & Permitting Services
ISSUED PERMIT

Building	Planning
Engineering	Public Works
Fire	Traffic

KEYPLAN

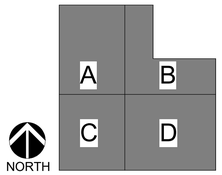

PRCNC20240216

MacDonald-Miller
FACILITY SOLUTIONS
17930 Intl. Blvd. Suite 120 SeaTac, WA 98188
Phone: 206-763-9400 www.macmiller.com

GEORGE M. GRAHAM
STATE OF WASHINGTON
53332
REGISTERED PROFESSIONAL ENGINEER

2/1/2024

REVISIONS:	REVIT CLOUD DESCRIPTION:	DATE:
	Permit Set	12/08/23
	100% Design Development	09/22/23

PSE - OPERATIONAL TRAINING CENTER
325 TODD ROAD NW
PUYALLUP, WA 98371

ROOF - MECHANICAL
MECHANICAL
100% CD SET

ENGINEER: G. Townsend	LAST REVISED: 1/26/2024
CHECKED BY: G. Graham	DATE PLOTTED: 1/26/2024
BIM: A. Perez	ISSUE DATE: 1/26/2024
PROJECT NUMBER: 7222-5111-00	
SHEET NUMBER: M2.02	

DPD STAMP

PRCNC20240216

City of Puyallup Development & Permitting Services ISSUED PERMIT	
Building	Planning
Engineering	Public Works
Fire	Traffic

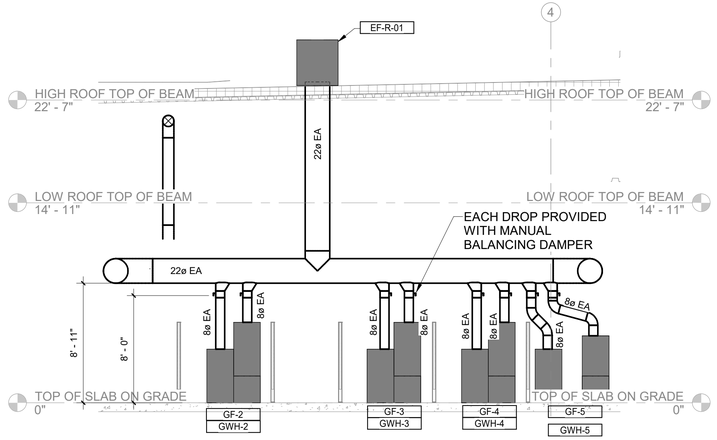

1 Section 1 - APPLIANCE LAB

SCALE: 3/16" = 1'-0"

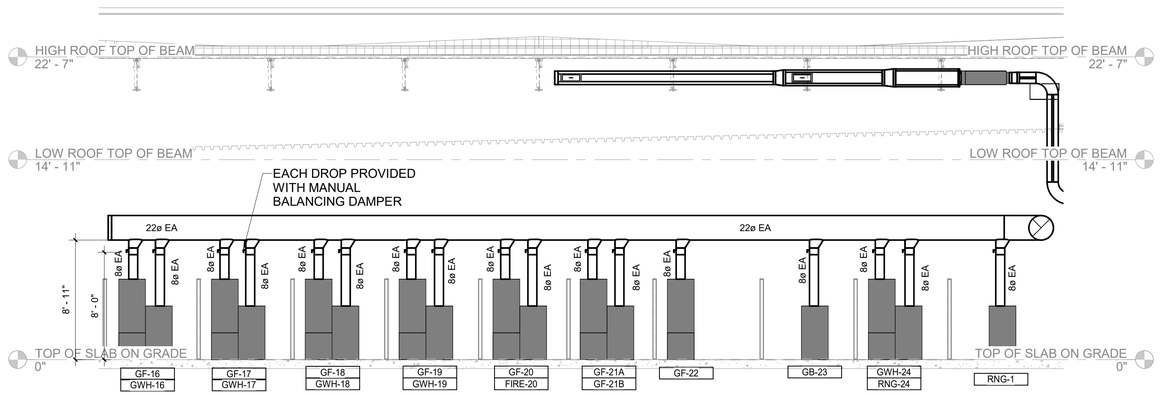

2 Section 2 - APPLIANCE LAB

SCALE: 3/16" = 1'-0"

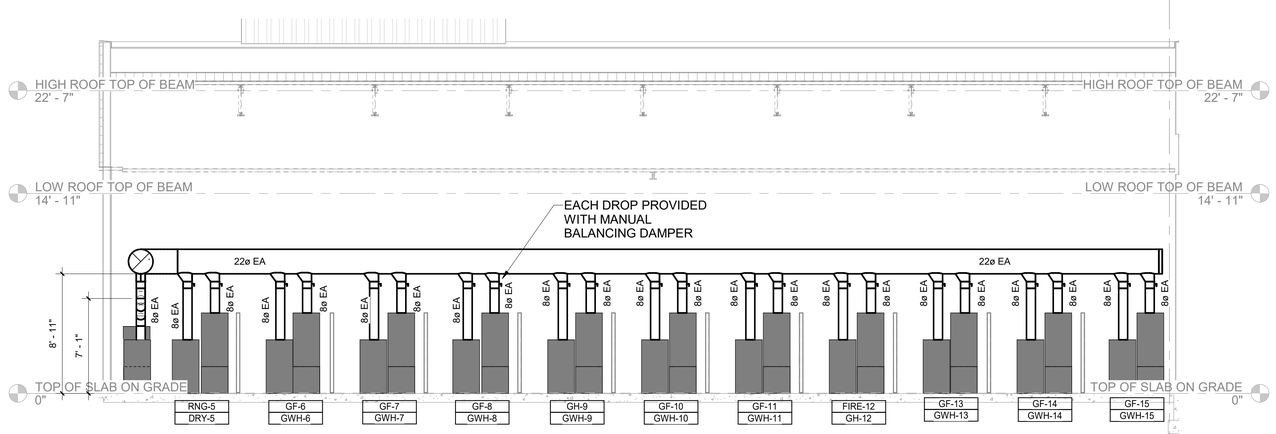

3 Section 3 - APPLIANCE LAB

SCALE: 3/16" = 1'-0"

MacDonald-Miller FACILITY SOLUTIONS
17930 Intl. Blvd, Suite 120 SeaTac, WA 98188
Phone: 206-763-9400 www.macmiller.com

2/1/2024

REVISIONS:	REVIT CLOUD DESCRIPTION:	DATE:
	Permit Set	12/08/23
	100% Design Development	09/22/23

PSE - OPERATIONAL TRAINING CENTER
325 TODD ROAD NW
PUYALLUP, WA 98371

APPLIANCE LAB - SECTIONS
MECHANICAL
100% CD SET

ENGINEER: G. Townsend	LAST REVISED: 1/26/2024
CHECKED BY: G. Graham	DATE PLOTTED: 1/26/2024
BIM: A. Perez	ISSUE DATE: 1/26/2024
PROJECT NUMBER: 7222-5111-00	
SHEET NUMBER: M4.01	

DPD STAMP

Autodesk Docs://7222 - 5111 - PSE North Bend Precon/Design/7222511 1_MKFS _MAP _PSE-OTC_ R22.rvt

City of Puyallup
Development & Permitting Services
ISSUED PERMIT
Building | Planning
Engineering | Public Works
Fire | Traffic

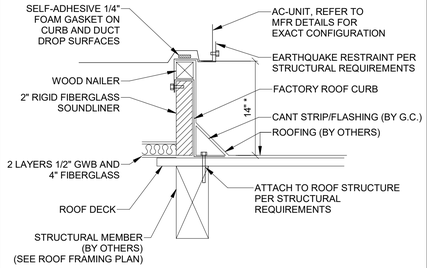

NOTE:

ROOF OPENING AND TEMPORARY WEATHER COVER OF ROOF OPENING BY G.C.

*14" IS MINIMUM STANDARD. FOR ABOVE DECK INSULATION APPLICATIONS MAINTAIN 8" DISTANCE FROM UNIT GASKET TO TOP OF FINISHED ROOF.

6 / M6.01 — ROOF TOP AC UNIT CURB DETAIL (UNITS 5 TO 25 TON)
N.T.S.

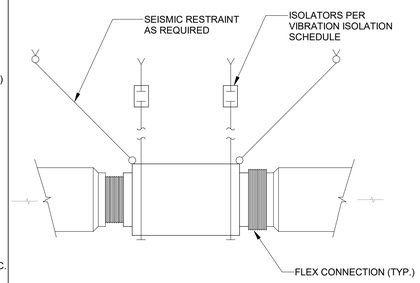

4 / M6.01 — HORIZONTAL INLINE CENTRIFUGAL FAN DETAIL
N.T.S.

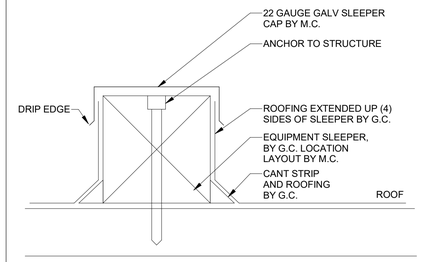

10 / M6.01 — ROOF TOP EQUIPMENT SLEEPER SUPPORT DETAIL
N.T.S.

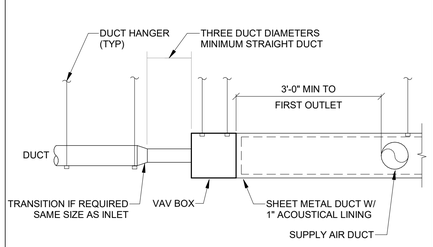

7 / M6.01 — OUSTIDE AIR VAV BOX DETAIL
N.T.S.

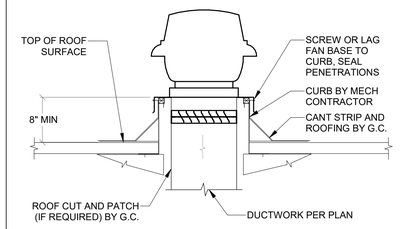

GENERAL NOTES:

EXACT DAMPER & CURB SIZE MUST BE CHECKED FROM EQUIPMENT SUBMITTALS. FINAL RESPONSIBILITY FOR CORRECT CURB & DAMPER SIZES BY INSTALLER

3 / M6.01 — EXHAUST FAN INSTALLATION DETAIL
N.T.S.

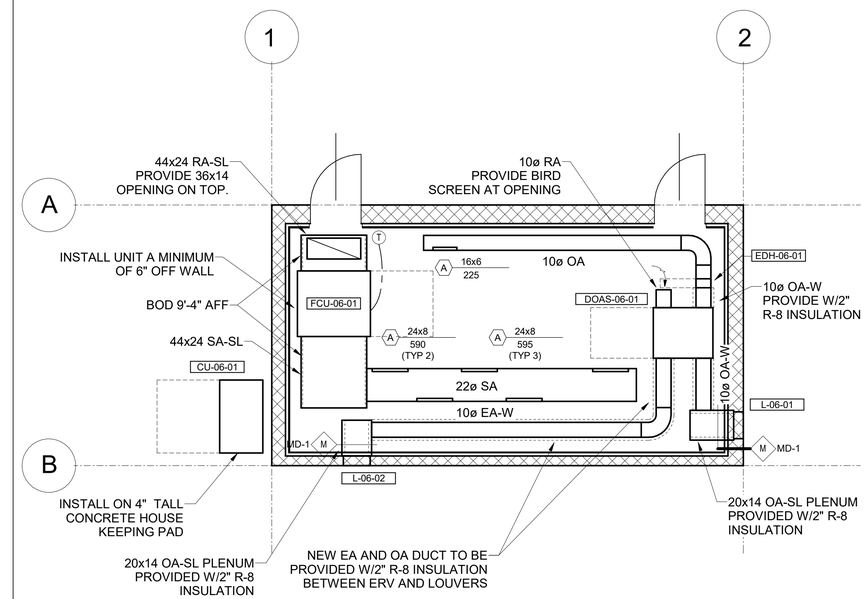

9 / M6.01 — CONTROL HOUSE FLOOR PLAN
N.T.S.

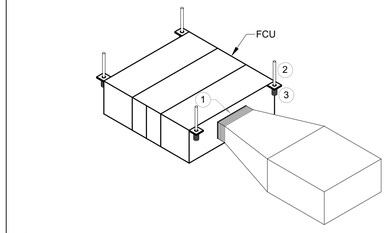

1 FLEXIBLE CONNECTION
2 PROVIDE ALL THREAD ROD. MOUNT UNIT FROM STRUCTURE TYPICAL 4 PLACES
3 NEOPRENE ISOLATOR OR SPRING ISOLATOR W/ MINIMUM 1" DEFLECTION TYPICAL 4 PLACES

6 / M6.01 — INDOOR VRF FAN COIL UNIT DETAIL
N.T.S.

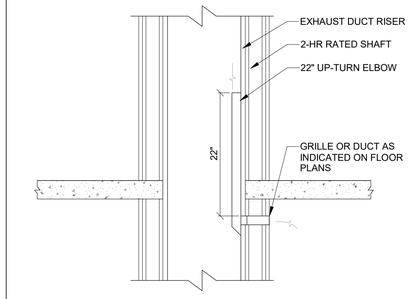

2 / M6.01 — UPTURNED SUB-DUCT EXHAUST DETAIL
N.T.S.

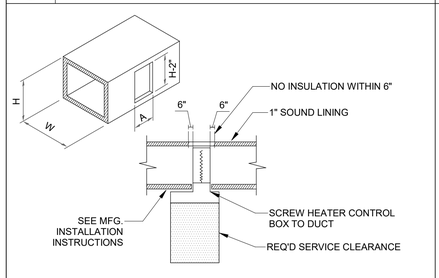

NOTES:

1. INSTALLATION REQUIRES A SLIP IN HEATER WITH RECESSED TERMINAL BOX
2. SEE COIL SPECIFICATIONS FOR DIMENSION "A"

5 / M6.01 — INSULATED DUCT ELECTRIC COIL INSTALLATION
N.T.S.

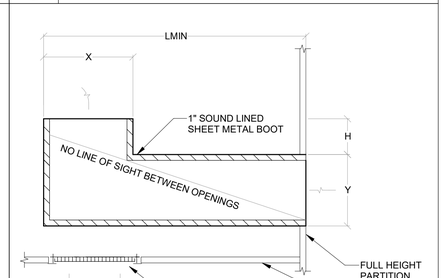

LMIN = (H+Y)/(H/X)+2"

1 / M6.01 — RETURN AIR TRANSFER DETAIL
N.T.S.

01/26/24 11:52:12

PRCNC20240216

MacDonald-Miller
FACILITY SOLUTIONS
17330 Intl. Blvd. Suite. 120 SeaTac. WA 98188
Phone: 206-763-9400 www.macmiller.com

GEORGE M. GRAHAM — STATE OF WASHINGTON — 39332 — REGISTERED PROFESSIONAL ENGINEER

2/1/2024

REVISIONS:	Permit Set	100% Design Development	REVIT CLOUD DESCRIPTION:	DATE:
				12/08/23
				09/22/23

PSE - OPERATIONAL TRAINING CENTER
325 TODD ROAD NW
PUYALLUP, WA 98371

MECHANICAL DETAILS
MECHANICAL
100% CD SET

ENGINEER: G. Townsend	LAST REVISED: 1/26/2024
CHECKED BY: G. Graham	DATE PLOTTED: 1/26/2024
BIM: A. Perez	ISSUE DATE: 1/26/2024
PROJECT NUMBER: 7222-5111-00	
SHEET NUMBER: M6.01	

DRS STAMP

Autodesk Docs://7222 - 5111 - PSE North Bend Prepon Design/7222s111_MMFS_MAP_PSE-OTC_R22.rvt

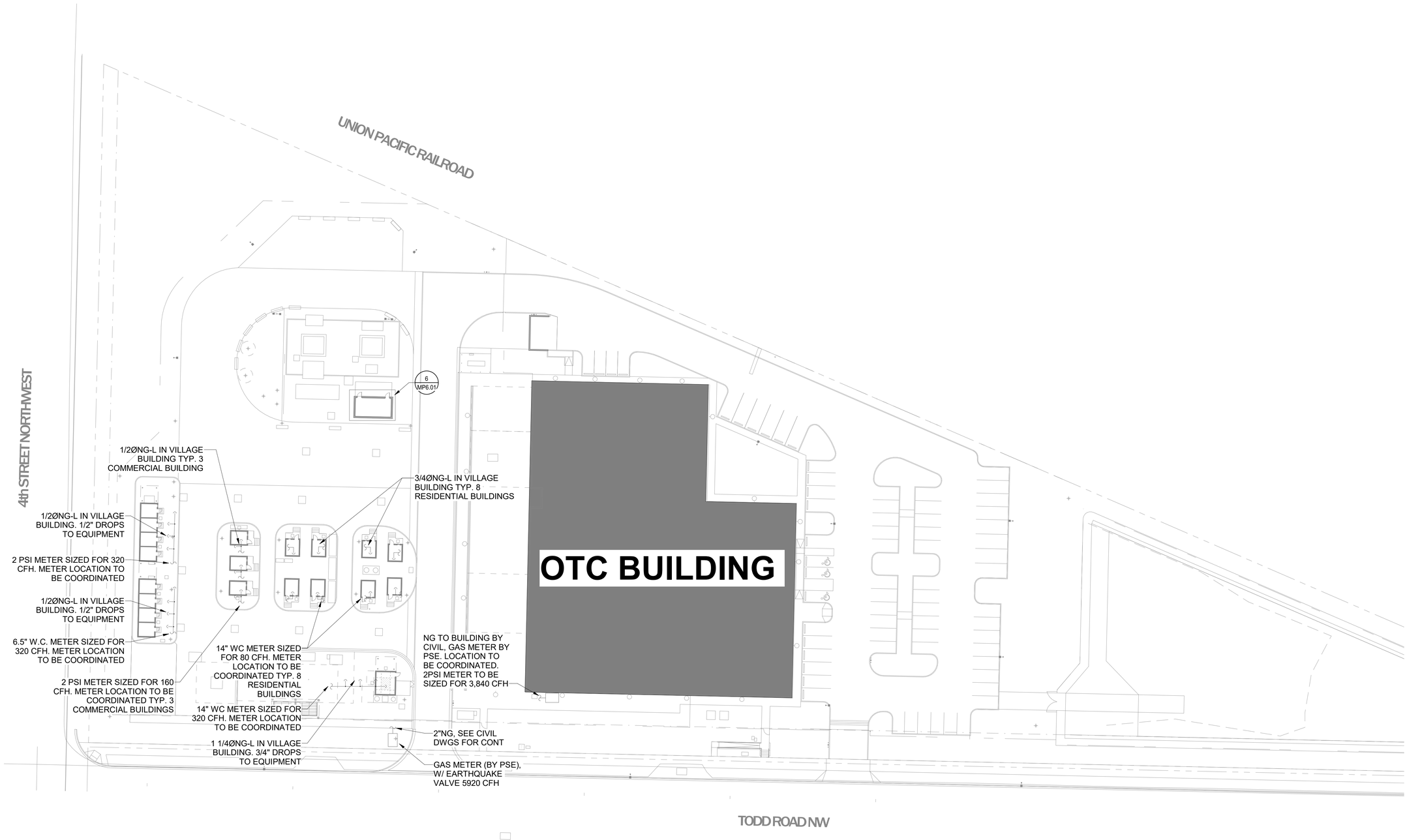

1 Site Plan - FITTING
SCALE: 1/32" = 1'-0"

01/26/24 11:32:13

PRCNC20240216

MacDonald-Miller
FACILITY SOLUTIONS
17330 Intl. Blvd. Suite.120 SeaTac. WA 98188
Phone: 206-763-9400 www.macmiller.com

GEORGE M. GRAHAM
STATE OF WASHINGTON
19332
REGISTERED
PROFESSIONAL ENGINEER

2/1/2024

REVISIONS:	DATE:
Permit Set	12/08/23
100% Design Development	09/22/23

REVIT CLOUD DESCRIPTION:

City of Puyallup
Development & Permitting Services
ISSUED PERMIT

Building	Planning
Engineering	Public Works
Fire	Traffic

PSE - OPERATIONAL TRAINING CENTER
325 TODD ROAD NW
PUYALLUP, WA 98371

SITE PLAN - FITTING
FITTING
100% CD SET

ENGINEER: G. Townsend	LAST REVISED: 1/26/2024
CHECKED BY: G. Graham	DATE PLOTTED: 1/26/2024
BIM: A. Perez	ISSUE DATE: 1/26/2024
PROJECT NUMBER: 7222-5111-00	
SHEET NUMBER: MP0.01S	

DRS STAMP

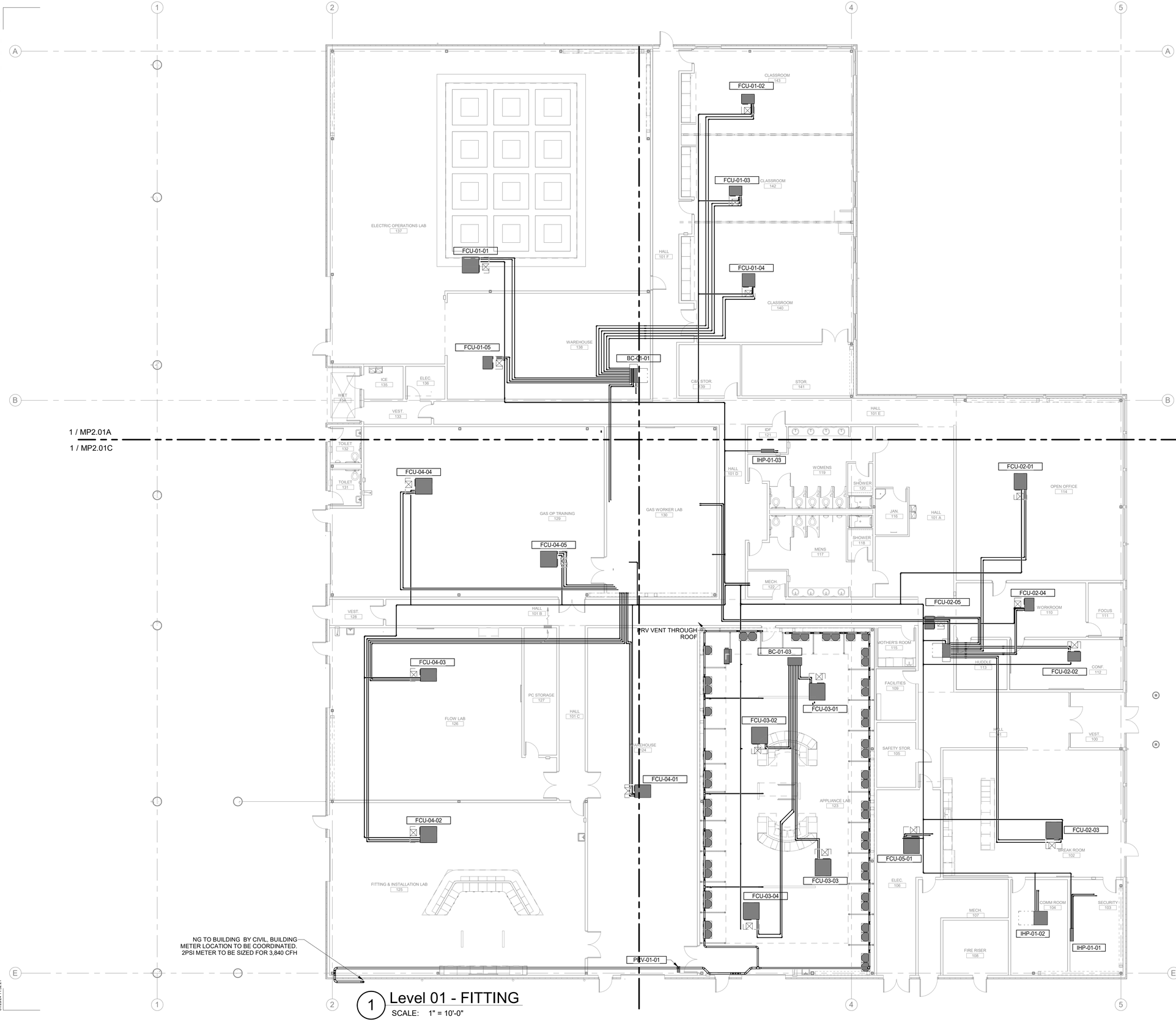

1 Level 01 - FITTING
SCALE: 1" = 10'-0"

City of Puyallup
Development & Permitting Services
ISSUED PERMIT

Building	Planning
Engineering	Public Works
Fire	Traffic

KEYPLAN

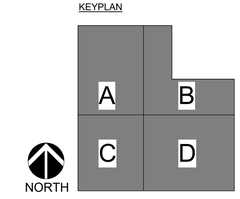

PRCNC20240216

MacDonald-Miller
FACILITY SOLUTIONS
17930 Intl. Blvd. Suite,120 SeaTac, WA 98188
Phone: 206-763-9400 www.macmiller.com

2/1/2024

REVISIONS:	REVIT CLOUD DESCRIPTION:	DATE:
	Permit Set	12/08/23
	100% Design Development	09/22/23

PSE - OPERATIONAL TRAINING CENTER

325 TODD ROAD NW
PUYALLUP, WA 98371

1ST FLOOR PLAN - FITTING

FITTING

100% CD SET

ENGINEER: G. Townsend	LAST REVISED: 1/26/2024
CHECKED BY: G. Graham	DATE PLOTTED: 1/26/2024
BIM: A. Perez	ISSUE DATE: 1/26/2024
PROJECT NUMBER: 7222-5111-00	
SHEET NUMBER: MP2.01	

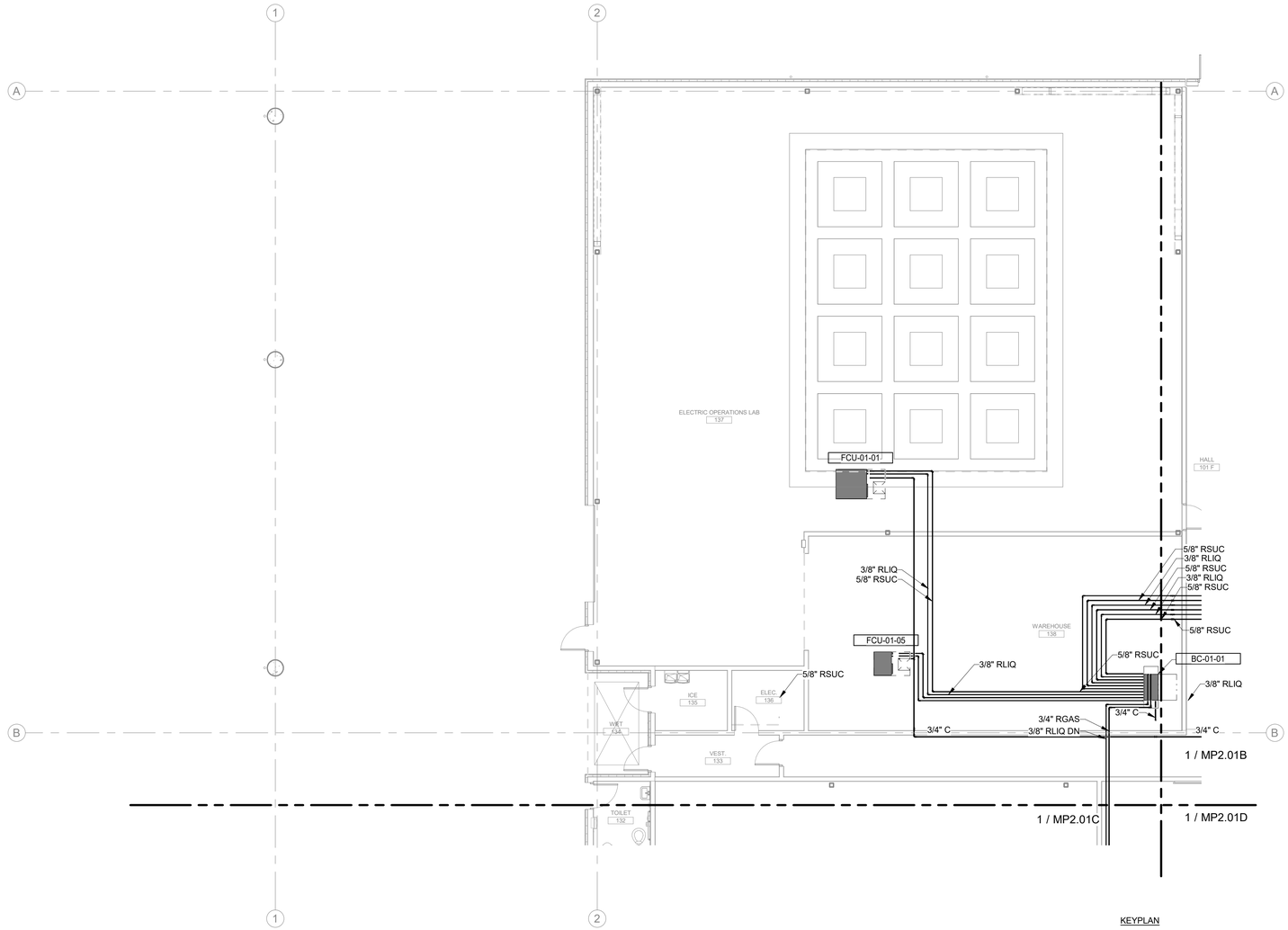

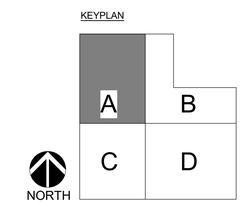

1 Level 01 - FITTING - SECTOR - A

SCALE: 1/8" = 1'-0"

PRCNC20240216

MacDonald-Miller
FACILITY SOLUTIONS
17930 Intl. Blvd. Suite 120 SeaTac, WA 98188
Phone: 206-763-9400 www.macmiller.com

2/1/2024

REVISIONS:	REVIT CLOUD DESCRIPTION:	DATE:
	Permit Set	12/08/23
	100% Design Development	09/22/23

City of Puyallup
Development & Permitting Services
ISSUED PERMIT

Building	Planning
Engineering	Public Works
Fire	Traffic

PSE - OPERATIONAL TRAINING CENTER
325 TODD ROAD NW
PUYALLUP, WA 98371

1ST FLOOR - FITTING
FITTING
100% CD SET

ENGINEER: G. Townsend	LAST REVISED: 1/26/2024
CHECKED BY: G. Graham	DATE PLOTTED: 1/26/2024
BIM: A. Perez	ISSUE DATE: 1/26/2024
PROJECT NUMBER: 7222-5111-00	
SHEET NUMBER: MP2.01A	

DPD STAMP

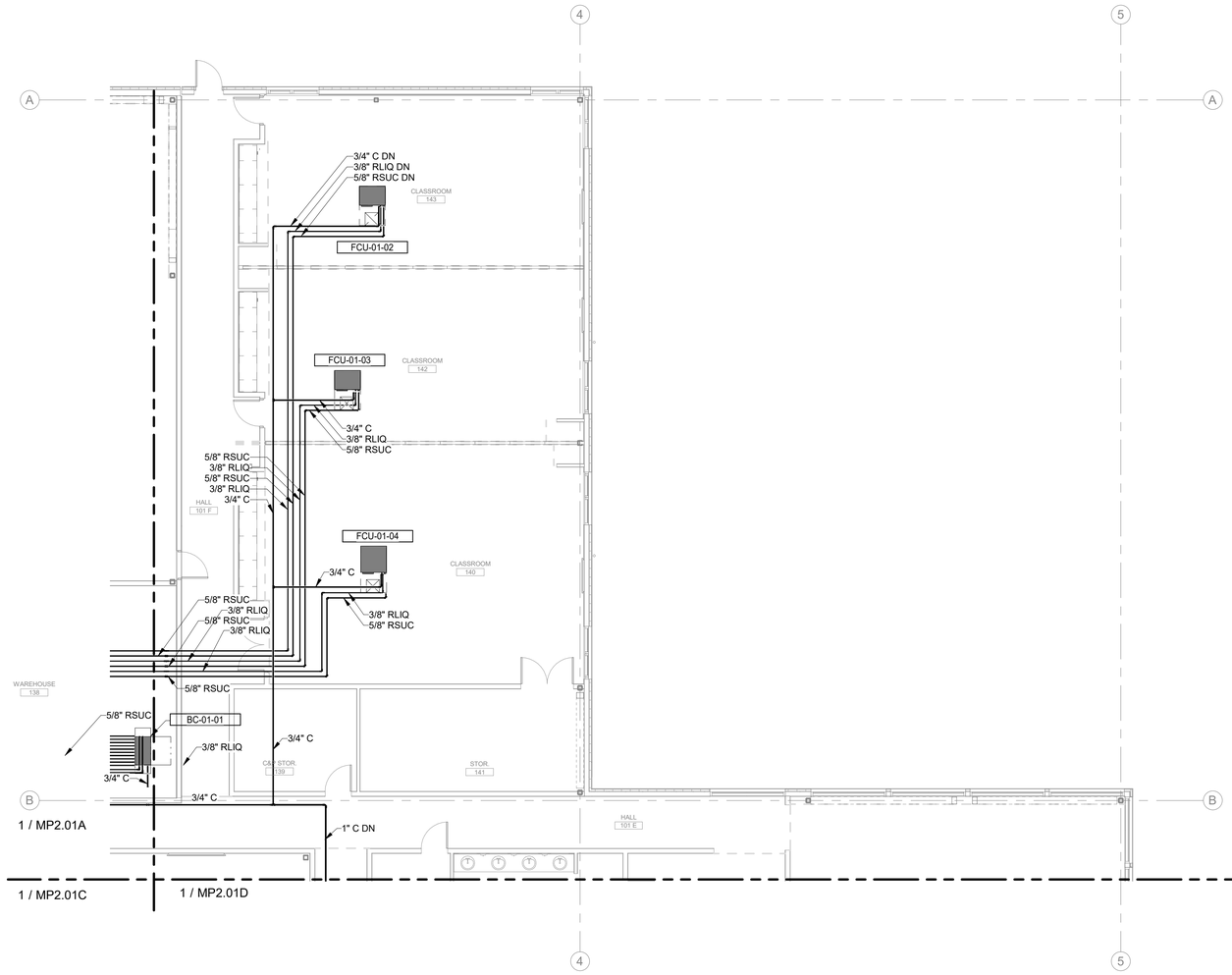

KEYPLAN

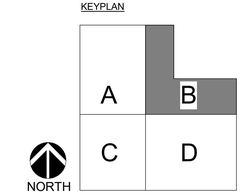

1 Level 01 - FITTING - SECTOR - B

SCALE: 1/8" = 1'-0"

PRCNC20240216

MacDonald-Miller
FACILITY SOLUTIONS
17930 Intl. Blvd. Suite 120 SeaTac, WA 98188
Phone: 206-763-9400 www.macmiller.com

2/1/2024

REVISIONS:	REVIT CLOUD DESCRIPTION:	DATE:
	Permit Set	12/08/23
	100% Design Development	09/22/23

City of Puyallup
Development & Permitting Services
ISSUED PERMIT

Building	Planning
Engineering	Public Works
Fire	Traffic

PSE - OPERATIONAL TRAINING CENTER
325 TODD ROAD NW
PUYALLUP, WA 98371

1ST FLOOR - FITTING
FITTING
100% CD SET

ENGINEER: G. Townsend	LAST REVISED: 1/26/2024
CHECKED BY: G. Graham	DATE PLOTTED: 1/26/2024
BIM: A. Perez	ISSUE DATE: 1/26/2024
PROJECT NUMBER: 7222-5111-00	
SHEET NUMBER: MP2.01B	

DPD STAMP

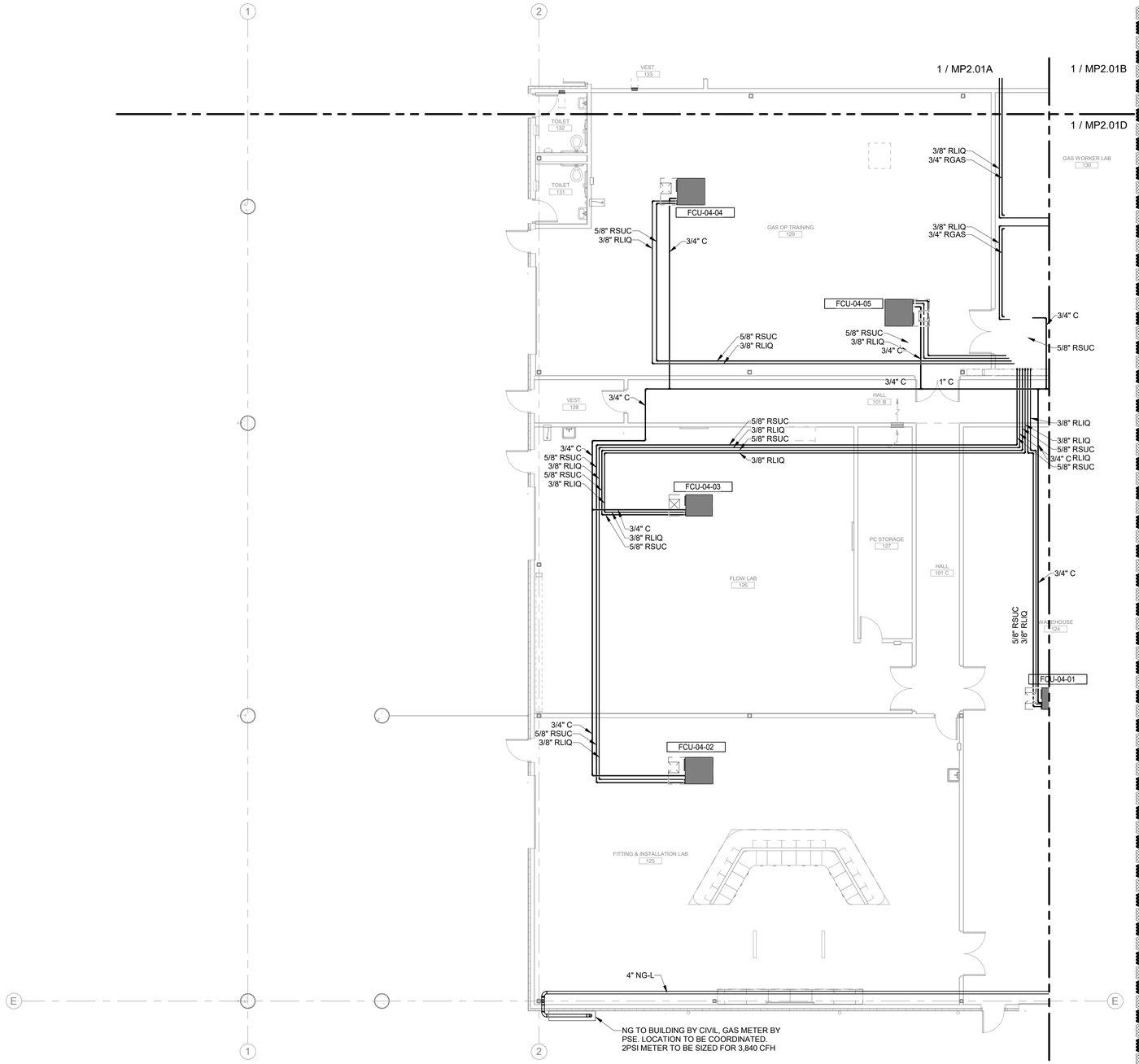

KEYPLAN

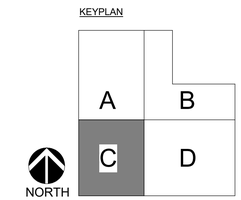

1 Level 01 - FITTING - SECTOR - C

SCALE: 1/8" = 1'-0"

PRCNC20240216

MacDonald-Miller
FACILITY SOLUTIONS
17930 Intl. Blvd, Suite 120 SeaTac, WA 98188
Phone: 206-763-9400 www.macmiller.com

2/1/2024

REVISIONS:	REVIT CLOUD DESCRIPTION:	DATE:
	Permit Set	12/08/23
	100% Design Development	09/22/23

City of Puyallup
Development & Permitting Services
ISSUED PERMIT

Building	Planning
Engineering	Public Works
Fire	Traffic

PSE - OPERATIONAL TRAINING CENTER
325 TODD ROAD NW
PUYALLUP, WA 98371

1ST FLOOR - FITTING
FITTING
100% CD SET

ENGINEER: G. Townsend	LAST REVISED: 1/26/2024
CHECKED BY: G. Graham	DATE PLOTTED: 1/26/2024
BIM: A. Perez	ISSUE DATE: 1/26/2024
PROJECT NUMBER: 7222-5111-00	
SHEET NUMBER: MP2.01C	

PRCNC20240216

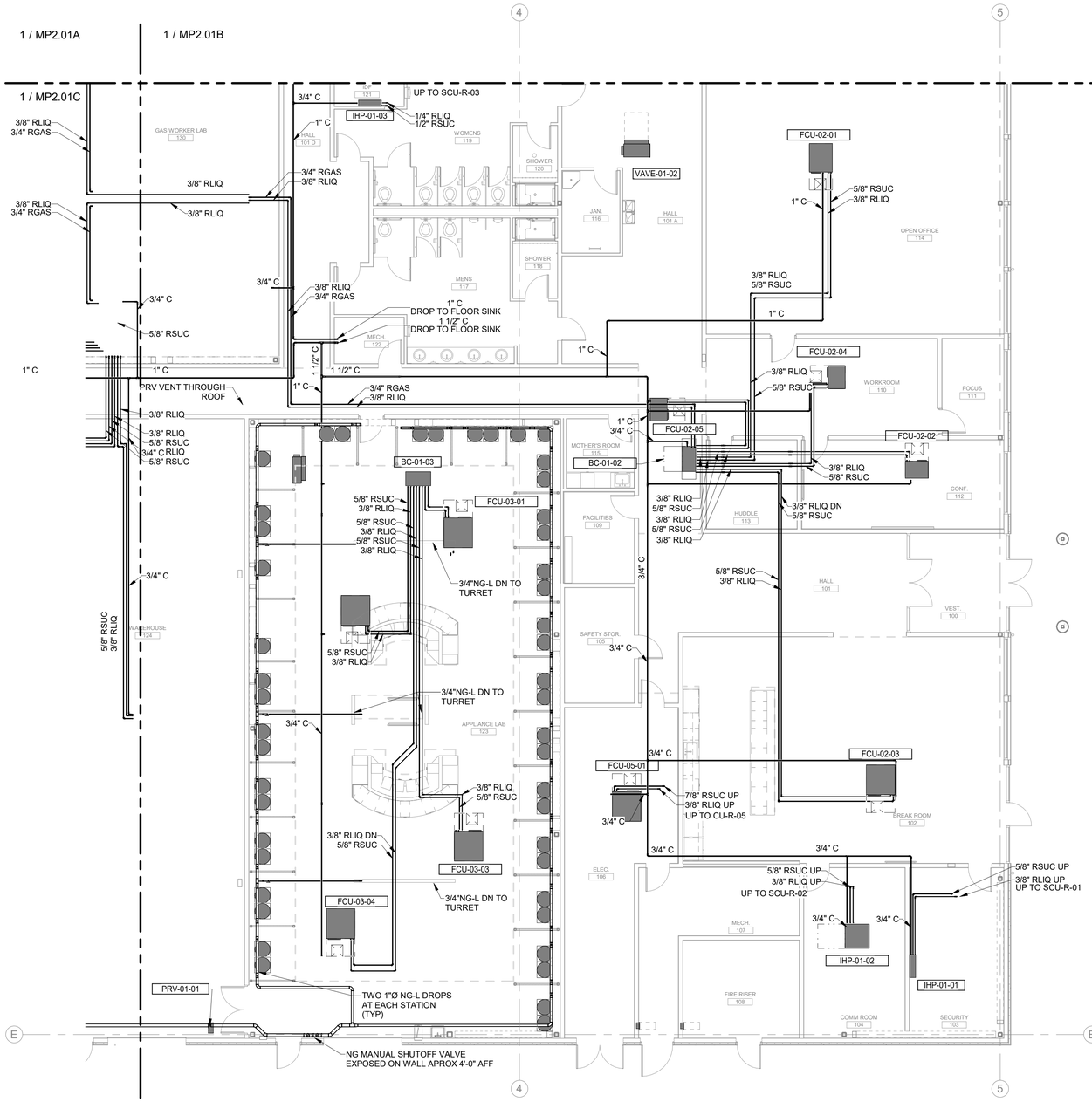

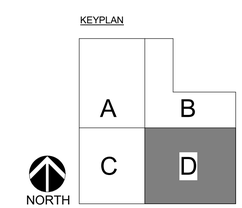

1 Level 01 - FITTING - SECTOR - D

SCALE: 1/8" = 1'-0"

MacDonald-Miller
FACILITY SOLUTIONS
17930 Intl. Blvd. Suite,120 SeaTac, WA 98188
Phone: 206-763-9400 www.macmiller.com

2/1/2024

REVISIONS:	REVIT CLOUD DESCRIPTION:	DATE:
	Permit Set	12/08/23
	100% Design Development	09/22/23

City of Puyallup
Development & Permitting Services
ISSUED PERMIT

Building	Planning
Engineering	Public Works
Fire	Traffic

PSE - OPERATIONAL TRAINING CENTER
325 TODD ROAD NW
PUYALLUP, WA 98371

1ST FLOOR - FITTING
FITTING
100% CD SET

ENGINEER: G. Townsend	LAST REVISED: 1/26/2024
CHECKED BY: G. Graham	DATE PLOTTED: 1/26/2024
BIM: A. Perez	ISSUE DATE: 1/26/2024
PROJECT NUMBER: 7222-5111-00	
SHEET NUMBER: MP2.01D	

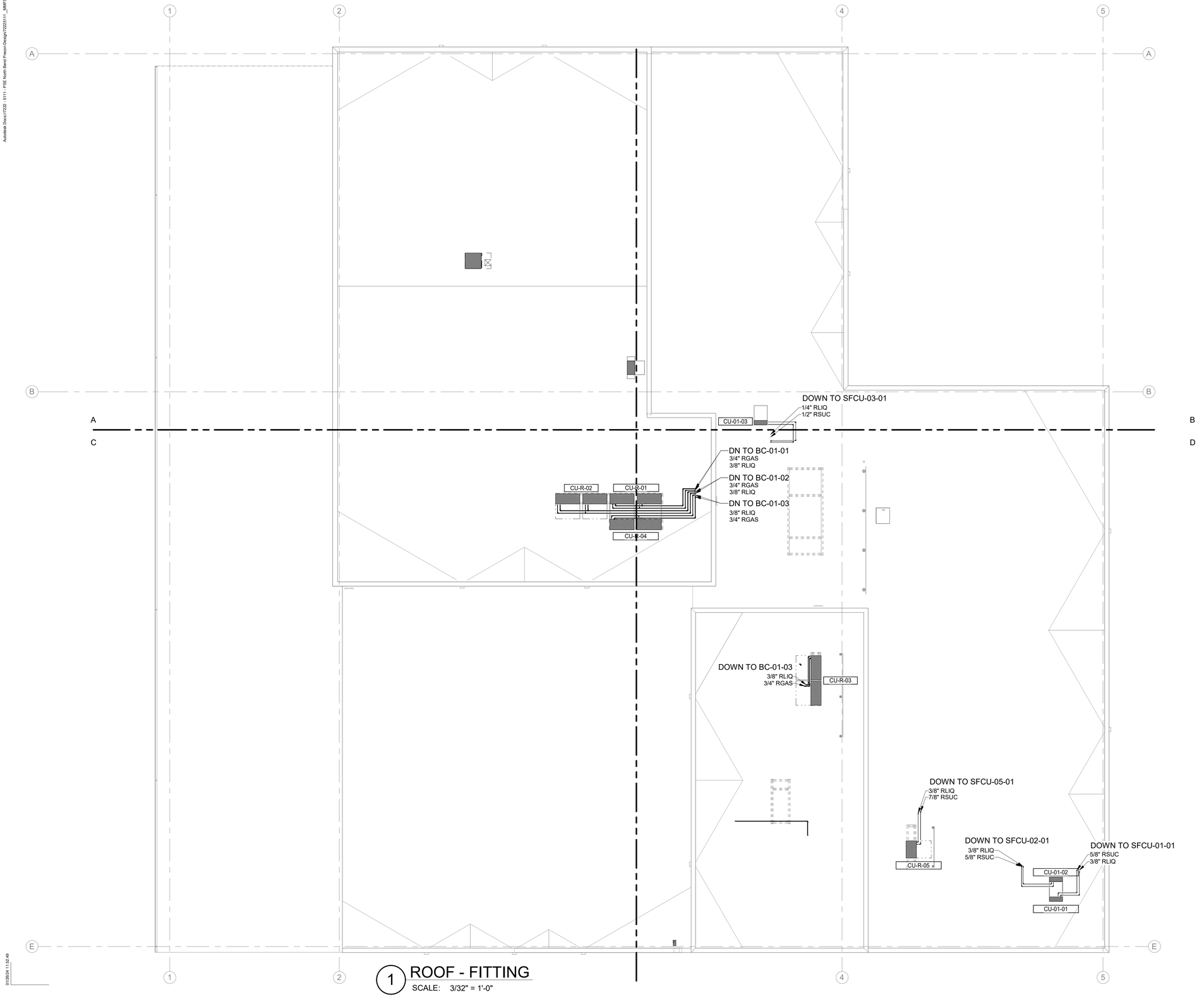

1 ROOF - FITTING
SCALE: 3/32" = 1'-0"

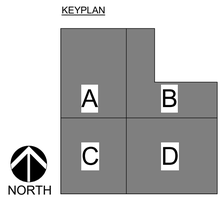

PRCNC20240216

MacDonald-Miller
FACILITY SOLUTIONS
17930 Intl. Blvd, Suite 120 SeaTac, WA 98188
Phone: 206-763-9400 www.macmiller.com

GEORGE M. GRAHAM
STATE OF WASHINGTON
53332
REGISTERED PROFESSIONAL ENGINEER

2/1/2024

REVISIONS:	REVIT CLOUD DESCRIPTION:	DATE:
	Permit Set	12/08/23
	100% Design Development	09/22/23

City of Puyallup
Development & Permitting Services
ISSUED PERMIT

Building	Planning
Engineering	Public Works
Fire	Traffic

PSE - OPERATIONAL TRAINING CENTER
325 TODD ROAD NW
PUYALLUP, WA 98371

ROOF PLAN - FITTING
FITTING
100% CD SET

ENGINEER: G. Townsend	LAST REVISED: 1/26/2024
CHECKED BY: G. Graham	DATE PLOTTED: 1/26/2024
BIM: A. Perez	ISSUE DATE: 1/26/2024
PROJECT NUMBER: 7222-5111-00	
SHEET NUMBER: MP2.02	

DPD STAMP

Autodesk Docs://7222 - 5111 - PSE North Bend Precon/Design/7222x5111_MMFS_MAP_PSE-OTC_R22.rvt

PSE Puyallup Re-Design

Diagram Symbol Legend

DISPLAY	DESCRIPTION
———	POWER WIRE
———	CONTROL WIRE
– – –	REF. PIPE

Cont. No | PAGE

CITY MULTI
SYSTEM SCHEMATIC DWG.

This drawing is schematic in nature. Final routing of piping & wiring shall be determined by the installing contractor and/or designer of record.

Additional refrigerant charge is needed depending on the size and length of extended piping. Please refer the amount of pre-charge and the formula of calculation which is mentioned on the data book.

1.25mm²(16 AWG) : 1.25mm²(16 AWG) or more. 0.75mm²(20 AWG) : between 0.5mm²(24. AWG) and 0.75mm²(20 AWG).

Coded Notes:
NOTE 1: Install twinning Y's within 15 degrees of level and with 20 inches of straight pipe on converging connection - reference installation manual for additional details including but not limited to special trapping requirements when twinning, and pipe slope requirements

PIPING AND CONTROLS	
SYMBOL	BRANCH PIPE MODEL NAME
J1	CMY-R020NCBK
J2	CMY-R302S-G1
J3	CMY-R160-J1
J4	CMY-R030NCBK
J5	CMY-R304S-G1
J6	Reducer
SYMBOL	LIQUID PIPE/GAS PIPE SIZE
P1	3/4 / 7/8
P2	/ 7/8
P3	3/8 / 7/8
P4	3/8 / 5/8
P5	1/4 / 1/2
P6	7/8 / 1-1/8
P7	3/8 / 3/4
P8	7/8 /
P9	/ 1-1/8
P10	1-1/8 / 1-5/8
SYMBOL	MODEL NUMBER
CR	PAC-YT52CRA(U-)

16-2 AWG(S)

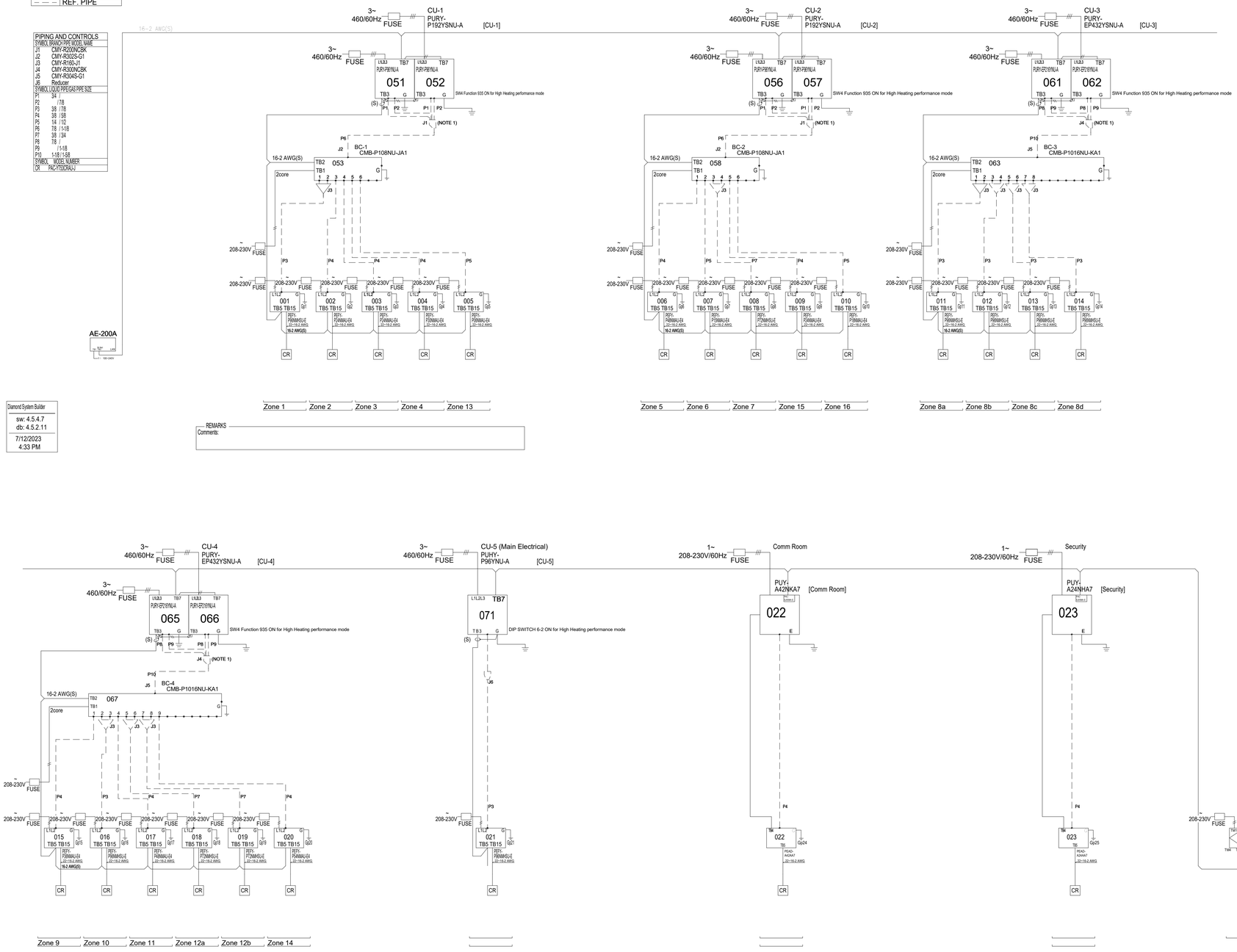

REMARKS
Comments:

Diamond System Builder
sw: 4.5.4.7
db: 4.5.2.11
7/12/2023
4:33 PM

AE-200A

1 / F4.01

VRF HEAT RECOVERY
N.T.S.

01/26/24 11:52:50

PRCNC20240216

MacDonald-Miller
FACILITY SOLUTIONS
17330 Intl. Blvd. Suite.120 SeaTac, WA 98188
Phone: 206-763-9400 www.macmiller.com

GEORGE M. GRAHAM 59332 REGISTERED PROFESSIONAL ENGINEER
2/1/2024

REVISIONS:	DATE:
Permit Set	12/08/23
100% Design Development	09/22/23

REVIT CLOUD DESCRIPTION:

City of Puyallup
Development & Permitting Services
ISSUED PERMIT
Building | Planning | Engineering | Public Works | Fire | Traffic

PSE - OPERATIONAL TRAINING CENTER
325 TODD ROAD NW
PUYALLUP, WA 98371

VRF DIAGRAMS
FITTING
100% CD SET

ENGINEER: G. Townsend
LAST REVISED: 1/26/2024
CHECKED BY: G. Graham
DATE PLOTTED: 1/26/2024
BIM: A. Perez
ISSUE DATE: 1/26/2024
PROJECT NUMBER: 7222-5111-00
SHEET NUMBER: MP4.01

DRC STAMP

Autodesk Docs://7222 - 5111 - PSE North Bend Precon Design/7222s111_MMFS_MAP_PSE-OTC_R22.rvt

This drawing is schematic in nature. Final routing of piping & wiring shall be determined by the installing contractor and/or designer of record. Additional refrigerant charge is needed depending on the size and length of extended piping. Please refer the amount of pre-charge and the formula of calculation which is mentioned on the data book.
1.25mm(1/4 AWG) - 1.25mm(1/4 AWG) or more. 0.75mm(20 AWG) - between 0.5mm(24 AWG) and 0.75mm(20 AWG).

DIAGRAM SYMBOL LEGEND

DISPLAY	DESCRIPTION
///	POWER WIRE
———	CONTROL WIRE
– – –	REF. PIPE

CONT.NO | PAGE

CITY MULTI

SYSTEM SCHEMATIC DWG.

PIPING AND CONTROLS

SYMBOL	LIQUID PIPE/GAS PIPE SIZE
P1	3/8 "/5/8 "
SYMBOL	MODEL NUMBER
CR	PAC-TS02KA-J

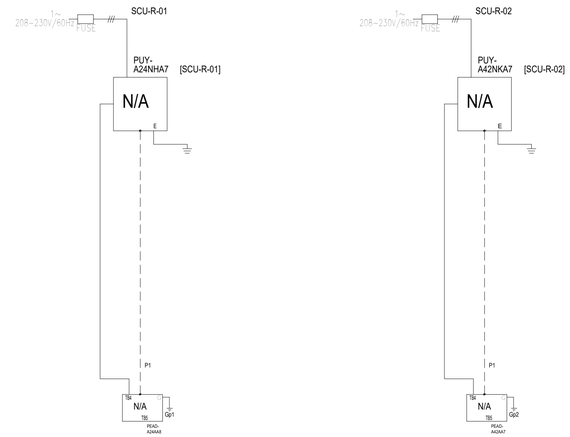

SECURITY
SPCU-01-01

COMM ROOM
SPCU-02-01

Diamond System Builder
sw: 4.4.3.44
db: 4.4.3.9
3/2/2023
11:26 AM

REMARKS
Comments:

2
F4.02

COOLING ONLY SPLITS
N.T.S.

This drawing is schematic in nature. Final routing of piping & wiring shall be determined by the installing contractor and/or designer of record. Additional refrigerant charge is needed depending on the size and length of extended piping. Please refer the amount of pre-charge and the formula of calculation which is mentioned on the data book.
1.25mm(1/4 AWG) - 1.25mm(1/4 AWG) or more. 0.75mm(20 AWG) - between 0.5mm(24 AWG) and 0.75mm(20 AWG).

PSE Puyallup Re-Design

DIAGRAM SYMBOL LEGEND

DISPLAY	DESCRIPTION
///	POWER WIRE
———	CONTROL WIRE
– – –	REF. PIPE

CONT.NO | PAGE

CITY MULTI

SYSTEM SCHEMATIC DWG.

PIPING AND CONTROLS

SYMBOL	BRANCH PIPE MODEL NAME
J1	Reducer
SYMBOL	LIQUID PIPE/GAS PIPE SIZE
P1	3/8 "/7/8 "
SYMBOL	MODEL NUMBER
MA	PAR-40MAAU

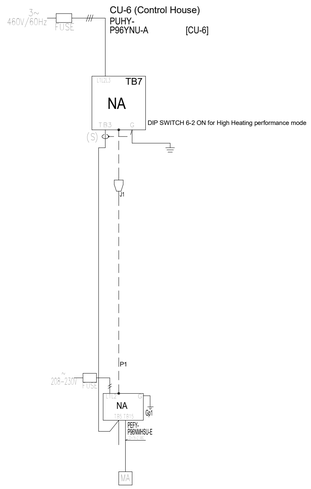

Diamond System Builder
sw: 4.5.4.7
db: 4.5.2.11
7/12/2023
4:33 PM

REMARKS
Comments:

3
F4.02

HEAT PUMP SPLITS
N.T.S.

PRCNC20240216

MacDonald-Miller
FACILITY SOLUTIONS
17330 Intl. Blvd. Suite.120 SeaTac. WA 98188
Phone: 206-763-9400 www.macmiller.com

GEORGE M. GRAHAM
STATE OF WASHINGTON
20332
REGISTERED
PROFESSIONAL ENGINEER

2/1/2024

REVISIONS:	REVIT CLOUD DESCRIPTION:	DATE:
	Permit Set	12/08/23
	100% Design Development	09/22/23

City of Puyallup
Development & Permitting Services
ISSUED PERMIT
Building | Planning
Engineering | Public Works
Fire | Traffic

PSE - OPERATIONAL TRAINING CENTER
325 TODD ROAD NW
PUYALLUP, WA 98371

SPLIT SYSTEM DIAGRAMS
FITTING
100% CD SET

ENGINEER: G. Townsend
CHECKED BY: G. Graham
BIM: A. Perez
PROJECT NUMBER: 7222-5111-00
SHEET NUMBER:

LAST REVISED: 1/26/2024
DATE PLOTTED: 1/26/2024
ISSUE DATE: 1/26/2024

MP4.02

DRS STAMP

01/26/24 11:32:51

PRCNC20240216

City of Puyallup
Development & Permitting Services
ISSUED PERMIT

Building	Planning
Engineering	Public Works
Fire	Traffic

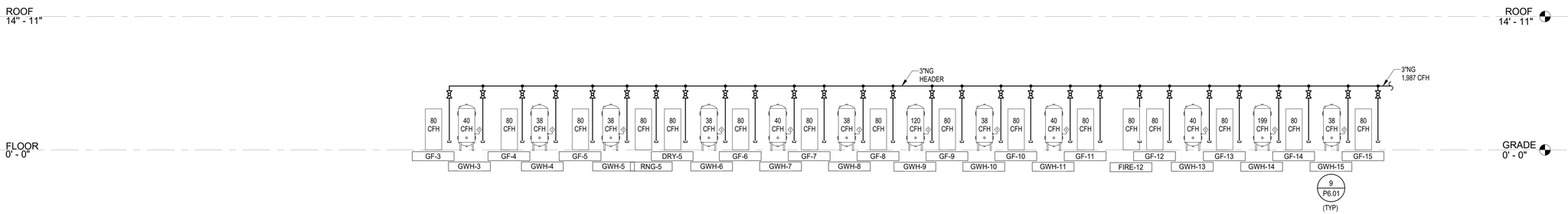

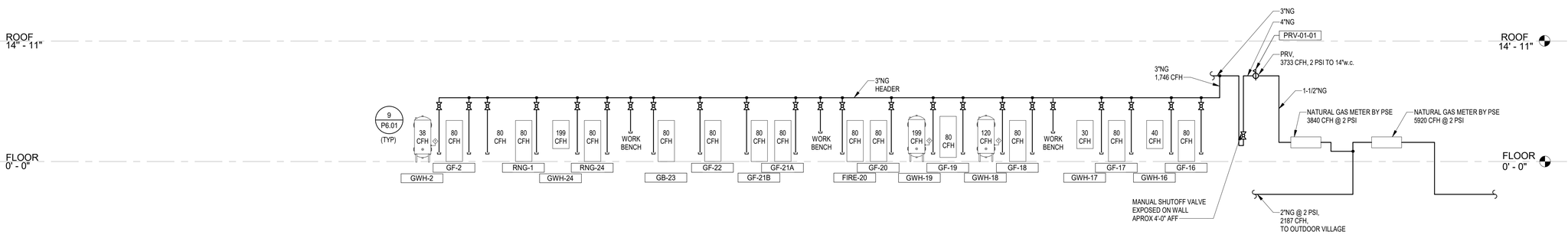

NOTES:

1. PER UPC, SCHEDULE 40 METALLIC PIPE [NFPA 54: TABLE 6.2.1(e)]*, 2 PSI NG PIPING SIZED FOR LONGEST LENGTH METHOD USING THE 100 FOOT LENGTH COLUMN, 1 PSI PRESSURE DROP.
2. PER UPC, SCHEDULE 40 METALLIC PIPE [NFPA 54: TABLE 6.2.1(b)]1, 2. LESS THAN 2 PSI PIPING SIZED FOR LONGEST LENGTH METHOD USING THE 200 FOOT LENGTH COLUMN, 0.5 PSE PRESSURE DROP.

1 MP4.03 NATURAL GAS RISER
SCALE: 1" = 10'-0"

MacDonald-Miller
FACILITY SOLUTIONS
17930 Intl. Blvd. Suite,120 SeaTac, WA 98188
Phone: 206-763-9400 www.macmiller.com

GEORGE M. GRAHAM
STATE OF WASHINGTON
53332
REGISTERED PROFESSIONAL ENGINEER

2/1/2024

REVISIONS:	REVIT CLOUD DESCRIPTION:	DATE:
	Permit Set	12/08/23
	100% Design Development	09/22/23

PSE - OPERATIONAL TRAINING CENTER
325 TODD ROAD NW
PUYALLUP, WA 98371

NATURAL GAS RISER DIAGRAM
FITTING
100% CD SET

ENGINEER: G. Townsend	LAST REVISED: 1/26/2024
CHECKED BY: G. Graham	DATE PLOTTED: 1/26/2024
BIM: A. Perez	ISSUE DATE: 1/26/2024
PROJECT NUMBER: 7222-5111-00	
SHEET NUMBER: MP4.03	

DPD STAMP

Autodesk Docs://7222 - 5111 - PSE North Bend Precon Design/7222511 _MMFS _MMP _PSE-OTC _R22.rvt
01/26/24 11:52:56

Autodesk Docs://7222 - 5111 - PSE North Bend Precon Design/7222-5111_MMFS_MMP_PSE-OTC_R22.rvt

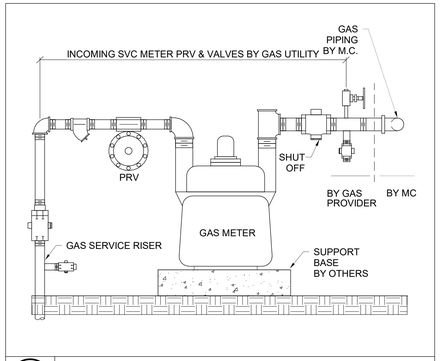

4 MP6.01 NATURAL GAS METER
N.T.S.

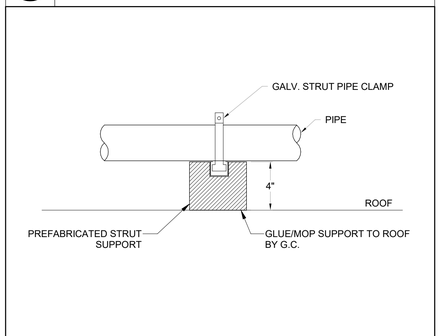

NOTE: FOR USE IN NON-SEISMIC PIPING APPLICATIONS

3 MP6.01 DETAIL PIPING ON ROOF
N.T.S.

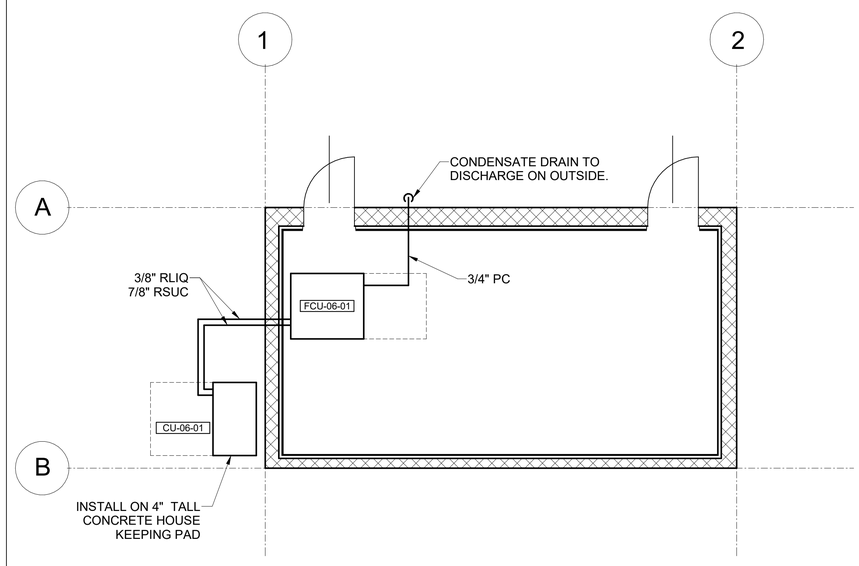

6 MP6.01 CONTROL HOUSE FLOOR PLAN
N.T.S.

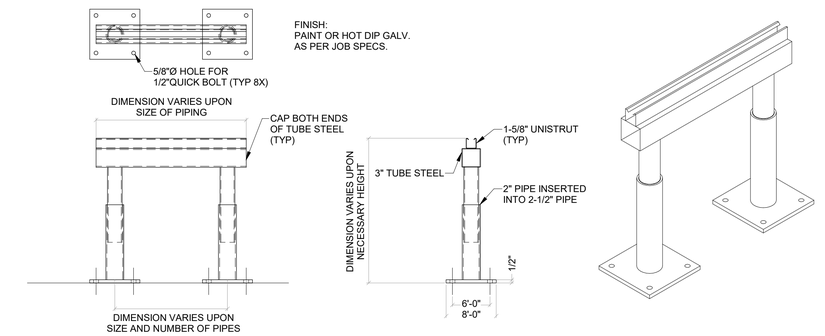

2 MP6.01 TYPICAL ROOF PIPE SUPPORT DETAIL
N.T.S.

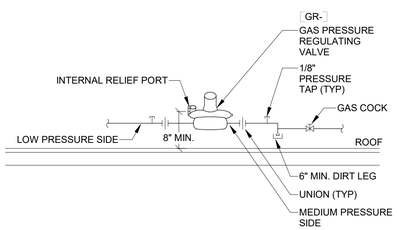

5 MP6.01 GAS PRESSURE REDUCING VALVE PIPING DETAIL
N.T.S.

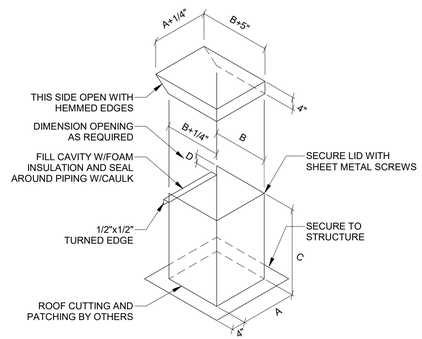

1 MP6.01 PIPING ROOF JACK
N.T.S.

PRCNC20240216

MacDonald-Miller
FACILITY SOLUTIONS
17930 Intl. Blvd, Suite 120 SeaTac, WA 98188
Phone: 206-763-9400 www.macmiller.com

GEORGE M. GRAHAM
STATE OF WASHINGTON
53332
REGISTERED PROFESSIONAL ENGINEER

2/1/2024

REVISIONS:	DATE:
Permit Set	12/08/23
100% Design Development	09/22/23

REVIT CLOUD DESCRIPTION:

City of Puyallup
Development & Permitting Services
ISSUED PERMIT

Building	Planning
Engineering	Public Works
Fire	Traffic

PSE - OPERATIONAL TRAINING CENTER
325 TODD ROAD NW
PUYALLUP, WA 98371

FITTING DETAIL
FITTING
100% CD SET

ENGINEER: G. Townsend	LAST REVISED: 1/26/2024
CHECKED BY: G. Graham	DATE PLOTTED: 1/26/2024
BIM: A. Perez	ISSUE DATE: 1/26/2024
PROJECT NUMBER: 7222-5111-00	
SHEET NUMBER: MP6.01	

DPD STAMP

01/26/24 11:52:57

PRCNC20240216

ZERVAS
ARCHITECTURE | INTERIOR DESIGN
zervasgroup.com
209 Prospect Street
Bellingham, WA 98225
360.734.4744

COFFMAN ENGINEERS
1101 2nd Avenue,
Suite 400
Seattle, WA 98101
ph 206.623.0717
www.coffman.com

CHRISTOPHER J. BAKER — STATE OF WASHINGTON — 31344 — REGISTERED PROFESSIONAL ENGINEER
1/25/2024

City of Puyallup
Development & Permitting Services
ISSUED PERMIT
Building | Planning | Engineering | Public Works | Fire | Traffic

ELECTRICAL SYMBOLS

LIGHTING

- FIXTURE TYPE
- SWITCH ZONE:
  - UPPERCASE LETTER X INDICATES TIME CLOCK CONTROL
  - LOWERCASE LETTER x INDICATES LOCAL OCCUPANCY/VACANCY SENSOR CONTROL
  - (a) INDICATES DAYLIGHT ZONE CONTROLLED BY PHOTOCELL (WHERE SHOWN)
- FIXTURE IS ON EMERGENCY POWER
- EXIT SIGN, CEILING MOUNT — REFER TO ARCHITECTURAL LIFE SAFETY PLAN FOR DIRECTION OF TRAVEL
- EXIT SIGN, WALL MOUNT — REFER TO ARCHITECTURAL LIFE SAFETY PLAN FOR DIRECTION OF TRAVEL
- CEILING MOUNTED DUAL TECHNOLOGY OCCUPANCY OR VACANCY SENSOR
- DAYLIGHT SENSOR (x,y) INDICATES ZONES CONTROLLED
- MULTI-BUTTON ON/OFF DIM UP/DOWN SWITCH. xy = SWITCHED LEG CONTROLLED PROVIDE SEPARATE ON/OFF FUNCTIONALITY FOR EACH SWITCH LEG NOTED.
- TWO-BUTTON ON/OFF SWITCH. x = SWITCHED LEG CONTROLLED PROVIDE SEPARATE ON/OFF FUNCTIONALITY FOR EACH SWITCH LEG NOTED.
- MULTI-BUTTON SCENE CONTROL SWITCH WITH DIM UP/DOWN
- OCCUPANCY OR VACANCY SENSOR SWITCH WITH ON/OFF AND DIM UP/DOWN FUNCTIONALITY
- OCCUPANCY OR VACANCY SENSOR SWITCH
- ON/OFF TOGGLE SWITCH
- THREE WAY TOGGLE SWITCH ON/OFF SWITCH
- OCCUPANCY SENSOR, IR, CEILING MOUNT
- OCCUPANCY SENSOR, DUAL TECHNOLOGY, WALL MOUNT
- CONTACTOR
- RELAY
- LIGHTING ROOM CONTROLLER — SUBSCRIPT INDICATES NUMBER OF CONTROL ZONES. PROVIDE ONE RELAY FOR EACH CONTROL ZONE.
- LIGHTING ROOM CONTROLLER (DIMMING) — SUBSCRIPT INDICATES NUMBER OF DIMMING ZONES. PROVIDE ONE RELAY FOR EACH DIMMING ZONE.

RECEPTACLES

- DUPLEX RECEPTACLE — NEMA 5-15R (NEMA 5-20R FOR DEDICATED CIRCUIT)
- DUPLEX RECEPTACLE — ABOVE COUNTER. COORDINATE W/ ARCH. ELEVATIONS
- DUPLEX RECEPTACLE — DEDICATED (NEMA 5-20R)
- DUPLEX RECEPTACLE — WEATHERPROOF
- DUPLEX RECEPTACLE — TAMPER RESISTANT
- DUPLEX RECEPTACLE — GROUND FAULT CIRCUIT INTERRUPTER
- DUPLEX RECEPTACLE — UNIVERSAL SERIAL BUS
- DOUBLE DUPLEX RECEPTACLE
- DUPLEX RECEPTACLE — CEILING MOUNTED
- DUPLEX RECEPTACLE WITH TOP OUTLET CONTROLLED
- ABOVE COUNTER DUPLEX RECEPTACLE WITH TOP OUTLET CONTROLLED
- DOUBLE DUPLEX RECEPTACLE WITH ONE DUPLEX CONTROLLED
- SPECIAL RECEPTACLE — TYPE AS INDICATED
- CORD REEL
- CONTROLLED RECEPTACLE RELAY. X = INDICATES CONTROLLED RECEPTACLE

EQUIPMENT

- PANELBOARD 277/480V
- PANELBOARD 120/208V OR 120/240V
- CABINET — TYPE AS INDICATED ON PLAN
- SWITCHBOARD
- TRANSFORMER — SIZE AND VOLTAGE AS INDICATED ON PLAN
- HORSEPOWER RATED TOGGLE SWITCH WITH OVERLOAD PROTECTION
- COMBINATION STARTER. HP RATED, 3-POLE, NEMA 1 MINIMUM UNLESS NOTED OTHERWISE — OVERCURRENT PROTECTION AS REQUIRED
- NON-FUSED DISCONNECT SWITCH — SIZE PER CONNECTED LOAD
- FUSED DISCONNECT SWITCH — SIZE PER CONNECTED LOAD. PROVIDE FUSES PER EQUIPMENT NAMEPLATE.
- EQUIPMENT CONNECTION. REFER TO EQUIPMENT CONNECTION SCHEDULE ON GENERAL NOTES SHEET WHEN "XX" IS SHOWN.
- MECHANICAL EQUIPMENT CALLOUT. REFER TO MECHANICAL EQUIPMENT SCHEDULE.
- FLUSH FLOOR BOX
- POKE THRU FITTING
- POKE THRU FITTING WITH FURNITURE FEED
- WALL FURNITURE FEED
- POWER POLE

ELECTRICAL RISER

- GROUND
- CIRCUIT BREAKER. NUMBER INDICATES TRIP SETTING AND NUMBER OF POLES
- ADJUSTABLE TRIP CIRCUIT BREAKER. NUMBERS INDICATE FRAME SIZE / TRIP SETTING
- FUSED DISCONNECT SWITCH. NUMBERS INDICATE SWITCH SIZE / FUSE SIZE
- PANELBOARD
- CURRENT TRANSFORMER (CT)
- CABLE TO BUS CONNECTION
- AUTOMATIC TRANSFER SWITCH (ATS)
- FEEDER TYPE — REFER TO FEEDER SCHEDULE ON ONE-LINE
- UTILITY METER
- BRANCH CIRCUIT METER
- FEEDER METER
- SURGE PROTECTIVE DEVICE (SPD)
- AVAILABLE SYMMETRICAL FAULT CURRENT IN AMPS

RACEWAYS

- RACEWAY CONCEALED IN WALL OR CEILING, EXPOSED IN UNFINISHED AREAS
- RACEWAY CONCEALED BELOW FLOOR
- FLEXIBLE CONDUIT FIXTURE WHIP WITH CONDUCTORS
- BRANCH CIRCUIT WIRING SHOWING CIRCUIT HOME RUN TO PANELBOARD. PROVIDE DEDICATED NEUTRAL FOR EACH CIRCUIT.
- RACEWAY TURNING UP
- RACEWAY TURNING DOWN
- CIRCUIT CONTINUATION
- LOW VOLTAGE WIRING
- JUNCTION BOX
- PULL BOX

LOW VOLTAGE SYSTEMS

FIRE ALARM

- MANUAL PULL STATION WITH GUARD
- HORN/STROBE
- HORN/STROBE — CEILING MOUNT
- STROBE
- STROBE — CEILING MOUNT
- BELL
- SMOKE DETECTOR
- DUCT TYPE SMOKE DETECTOR (SUPPLY DUCT U.O.N.)
- FIXED TEMPERATURE HEAT DETECTOR
- ADDRESSABLE RELAY
- MONITOR MODULE
- CONNECTION TO ELECTROMAGNETIC DOOR HOLDER
- CONNECTION TO ELECTROMAGNETIC DOOR HOLDER (MOUNT IN HEAD OF DOOR)
- 'G' INDICATES DEVICE WITH GUARD
- INFRARED BEAM SMOKE DETECTOR TRANSMITTER
- INFRARED BEAM SMOKE DETECTOR RECEIVER

INTERCOM/CLOCK SYSTEM

- CEILING MOUNTED SPEAKER
- CEILING MOUNTED SPEAKER — VANDAL RESISTANT
- WALL MOUNTED SPEAKER
- WALL MOUNTED EXTERIOR SPEAKER (VANDAL RESISTANT & WEATHERPROOF)
- CEILING MOUNTED EXTERIOR SPEAKER (VANDAL RESISTANT & WEATHERPROOF)
- ANALOG CLOCK (12" U.O.N.). 'G' INDICATES WIRE GUARD
- DIGITAL CLOCK/SPEAKER COMBINATION
- 10" DIAMETER EXTERIOR CLASS CHANGE BELL
- INTERCOM CALL BUTTON
- INTERCOM HANDSET

TELECOMMUNICATIONS

- TELECOMMUNICATIONS OUTLET. X = QTY. OF CAT 6 JACKS
- WIRELESS ACCESS POINT — 1 CAT 6 JACK
- AUDIO/VIDEO OUTLET

SECURITY SYSTEM

- DOOR CONTACTS
- INFRARED MOTION DETECTOR
- KEYPAD
- ELECTRIC STRIKE
- CARD READER
- 360° MOTION SENSOR
- MAGNETIC LOCK

CABLE TELEVISION (CATV) SYSTEM

- CATV OUTLET

CLOSED CIRCUIT TELEVISION (CCTV) SYSTEM

- CCTV CAMERA
- 180° CAMERA
- 360° CAMERA

ELECTRICAL ABBREVIATIONS

AD	AUTO DOOR
AF	AMPERE FRAME
AFF	ABOVE FINISHED FLOOR
AHU	AIR HANDLING UNIT
AIC	AMPERE INTERRUPTING CURRENT
AMP	AMPERE
AS	AMPERE SWITCH
ASV	AIR SOLENOID VALVE
AT	AMPERE TRIP
ATS	AUTOMATIC TRANSFER SWITCH
AWG	AMERICAN WIRE GAUGE
BAS	BUILDING AUTOMATION SYSTEM
BBO	BACKBOARD OPERATOR
BL	BLEACHERS
BLDG	BUILDING
C	CONDUIT
CAB	CABINET
CB	CIRCUIT BREAKER
CCTV	CLOSED CIRCUIT TELEVISION
CKT	CIRCUIT
CLG	CEILING
CM	COFFEE MAKER
CMU	CONCRETE MASONRY UNIT
CO	CONDUIT ONLY
COMM	COMMUNICATION
COP	COPIER
CT	COOK TOP
CT	CURRENT TRANSFORMER
CU	COPPER
DCVA	DOUBLE CHECK VALVE ASSEMBLY
DET	DETAIL
DIA	DIAMETER
DISC	DISCONNECT
DSPL	DISPOSAL
DLC	DOOR LOCK CONTROLLER
DN	DOWN
DO	DOOR OPERATOR
DPST	DOUBLE POLE, SINGLE THROW
DRY	DRYER
DW	DISHWASHER
DWG	DRAWING
EA	EACH
EF	EXHAUST FAN
EH	ELECTRIC HEATER
EHD	ELECTRIC HAND DRYER
ELEC	ELECTRIC
ELEV	ELEVATOR
EMT	ELECTRICAL METALLIC TUBING
EPO	EMERGENCY POWER OFF
EQUIP	EQUIPMENT
EWC	ELECTRIC WATER COOLER
EWH	ELECTRIC WATER HEATER
EWS	ELECTRIC WINDOW SHADE
EXIST	EXISTING
FA	FIRE ALARM
FAAP	FIRE ALARM ANNUNCIATOR PANEL
FACP	FIRE ALARM CONTROL PANEL
FDMPR	FIRE DAMPER
FH	FUME HOOD
FMT	FLEXIBLE METALLIC TUBING
FU or F	FUSE
FVNR	FULL VOLTAGE NON-REVERSING
G	GROUND
GALV	GALVANIZED
GC	GOGGLE CABINET
GD	GARBAGE DISPOSAL
GEC	GROUNDING ELECTRODE CONDUCTOR
GEN	GENERATOR
GFCI	GROUND FAULT CIRCUIT INTERRUPTER
GSV	GAS SOLENOID VALVE
HH	HAND HOLE
HID	HIGH INTENSITY DISCHARGE
HP	HORSEPOWER
HPF	HIGH POWER FACTOR
HPS	HIGH PRESSURE SODIUM
HT	HEAT TRACE
IH	INSTAHOT
IM	ICE MACHINE
IWD	INTERCOM WALL DISPLAY
J-BOX	JUNCTION BOX
kcmil	THOUSAND CIRCULAR MILS
kV	KILOVOLT
kVA	KILOVOLT AMPERE
kW	KILOWATT
kWh	KILOWATT HOUR
MAX	MAXIMUM
MCC	MOTOR CONTROL CENTER
MFR	MANUFACTURER
MECH	MECHANICAL
MH	MANHOLE; METAL HALIDE
MIN	MINIMUM
ML	MAGNETIC LOCK
MLO	MAIN LUGS ONLY
MTD	MOUNTED
MTG	MOUNTING
MW	MICROWAVE
NEC	NATIONAL ELECTRICAL CODE
NEUT	NEUTRAL
NC	NORMALLY CLOSED
NIC	NOT IN CONTRACT
NO	NUMBER; NORMALLY OPEN
NTS	NOT TO SCALE
OD	OVERHEAD (COILING) DOOR
OF/CI	OWNER FURNISHED / CONTRACTOR INSTALLED
OF/OI	OWNER FURNISHED / OWNER INSTALLED
PF	POWER FACTOR
PH or ø	PHASE
PIV	POST INDICATOR VALVE
PNL	PANEL
PROJ	PROJECTOR
PS	PROJECTION SCREEN
PTR	PRINTER
PVC	POLYVINYL CHLORIDE (PLASTIC)
PWR	POWER
QTY	QUANTITY
RA FAN	RETURN AIR FAN
RECPT	RECEPTACLE
REF	REFRIGERATOR
REQD	REQUIRED
RH	RANGE HOOD
RMC	RIGID METAL CONDUIT
RNG	RANGE
RSD	ROLLING STEEL DOOR
SDMPR	SMOKE DAMPER
SF	SUPPLY FAN
SOLV	SOLENOID VALVE
SPD	SURGE PROTECTIVE DEVICE
SPEC	SPECIFICATION
SPST	SINGLE POLE, SINGLE THROW
ST	SHUNT TRIP
STD	STANDARD
STL	STEEL
SW	SWITCH
SWBD	SWITCHBOARD
SWGR	SWITCHGEAR
TEL	TELEPHONE
TEMP	TEMPORARY
TP	TRAP PRIMER
TR	TAMPER RESISTANT
TTB	TELEPHONE TERMINAL BOARD
TYP	TYPICAL
UC	UNDER COUNTER
UGND	UNDERGROUND
UH	UNIT HEATER
UL	UNDERWRITERS LABORATORIES
UON	UNLESS OTHERWISE NOTED
UPS	UNINTERRUPTIBLE POWER SUPPLY
USB	UNIVERSAL SERIAL BUS
V	VOLT
VA	VOLT AMPERE
VFD	VARIABLE FREQUENCY DRIVE
VM	VENDING MACHINE
W	WATT
W/	WITH
WAC	WASHINGTON ADMINISTRATIVE CODE
WAS	WASHER
W/D	STACKED WASHER / DRYER
WF	WASH FOUNTAIN
WM	WASHING MACHINE
W/O	WITHOUT
WON	WON DOOR
WP	WEATHERPROOF; WATERPROOFING
XFMR	TRANSFORMER
Z	IMPEDANCE

Separate Electrical Permit is required with the Washington State Department of Labor & Industries.
https://lni.wa.gov/licensing-permits/electrical/electrical-permits-fees-and-inspections or call for Licensing Information: 1-800-647-0982

DRAWING INDEX

SHEET NUMBER	DESCRIPTION
E0.01	COVER SHEET AND GENERAL INFORMATION
E0.02	GENERAL NOTES
E0.03	LUMINAIRE SCHEDULE
E0.04	MECHANICAL EQUIPMENT CONNECTION SCHEDULE
E0.05	NREC
E0.06	NREC
E0.07	NREC — CONTROL BUILDING
E0.08	NREC — CONTROL BUILDING
E1.01	OVERALL ELECTRICAL SITE PLAN
E1.02	PARTIAL ELECTRICAL SITE PLAN
E2.01	LIGHTING PLAN
E2.02	LIGHTING PLAN
E3.01	POWER & SYSTEMS PLAN
E3.02	POWER & SYSTEMS PLAN
E3.03	MECHANICAL POWER PLAN
E3.04	ROOF POWER PLAN
E4.01	ENLARGED PARTIAL PLANS
E5.01	ONE-LINE DIAGRAM
E5.02	ONE-LINE DIAGRAMS
E6.01	PANEL SCHEDULES
E6.02	PANEL SCHEDULES
E6.03	PANEL SCHEDULES
E6.04	PANEL SCHEDULES
E6.05	PANEL SCHEDULES
E6.06	PANEL SCHEDULES
E6.07	PANEL SCHEDULES
E6.08	PANEL SCHEDULES
E7.01	DETAILS

100% CD SET

REV	ISSUED FOR	DATE

SCALE: NONE

PSE - OPERATIONAL TRAINING CENTER

COVER SHEET AND GENERAL INFORMATION

PROJECT No:	221158
DRAWN BY:	RMF
CHECKED BY:	CJB
DATE ISSUED:	01/26/24

E0.01

© 2022

PRCNC20240216

GENERAL NOTES

THE FOLLOWING GENERAL NOTES APPLY TO ALL DRAWINGS

1. ITEMS NOTED AS "TYPICAL" ON ANY DRAWING REFERS TO ALL DRAWINGS.
2. PROVIDE NYLON PULL STRING IN ALL EMPTY RACEWAYS.
3. NO STRUCTURAL MEMBERS SHALL BE CUT OR ALTERED WITHOUT PRIOR APPROVAL OF THE ARCHITECT AND STRUCTURAL ENGINEER.
4. ALL RACEWAYS WITHIN THE BUILDING SHALL BE RUN OVERHEAD U.O.N. RACEWAYS SHALL NOT BE RUN UNDER THE FLOOR SLAB UNLESS SPECIFICALLY SHOWN ON THE DRAWINGS.
5. NO RACEWAYS SHALL BE RUN IN FLOOR SLABS.
6. LOCATIONS OF ALL WALL MOUNTED DEVICES ARE SHOWN SCHEMATICALLY. COORDINATE WITH THE ARCHITECTURAL DRAWINGS, ELEVATIONS AND CASEWORK SUPPLIERS SHOP DRAWINGS FOR EXACT LOCATION OF DEVICES PRIOR TO ROUGH-IN.
7. ALL RACEWAYS IN FINISHED SPACES SHALL BE CONCEALED.
8. PROVIDE 2" EMT SLEEVES FOR LOW VOLTAGE WIRING RUNNING THROUGH NON-RATED WALLS, FLOORS AND CEILINGS.
9. PROVIDE SLEEVES WITH APPROVED FIRE STOPPING AT EACH LOCATION WHERE LOW VOLTAGE WIRING PENETRATES A RATED WALL OR CEILING.
10. SEAL ALL PENETRATIONS IN RATED FLOORS AND CEILINGS WITH A UL APPROVED FIRE STOP SYSTEM.
11. PROVIDE A COMPLETE DESIGN-BUILD PATHWAY SYSTEM FOR ALL LOW VOLTAGE WIRING, SEE SPECIFICATIONS. QUANTITY AND SIZE OF RACEWAYS SHOWN ON LOW VOLTAGE SYSTEMS PLANS ARE THE MINIMUM TO BE PROVIDED. CONTRACTOR SHALL PROVIDE ALL RACEWAYS AS REQUIRED.
12. ALL LOW VOLTAGE WIRING NOT RUN IN A METALLIC RACEWAY SHALL BE PLENUM RATED.
13. ALL EQUIPMENT, LUMINAIRES, RACEWAYS, DEVICES, ETC. SHALL BE UL LISTED.
14. MOUNT ALL DEVICES ABOVE COUNTERS 6" ABOVE BACKSPLASH UNLESS NOTED OTHERWISE.
15. ALL CONTROLLED RECEPTACLES SHALL BE PERMANENTLY LABELED AS REQUIRED TO BY THE NEC.
16. REFER TO ARCHITECTURAL DRAWINGS FOR DEVICE MOUNTING HEIGHTS.

SITE PLANS

THE FOLLOWING GENERAL NOTES APPLY TO ALL SITE PLAN DRAWINGS

1. COORDINATE ROUTING OF UNDERGROUND RACEWAYS WITH ALL NEW AND EXISTING UTILITIES. REFER TO CIVIL DRAWINGS.
2. CONTRACT WITH A LOCATOR SERVICE TO MARK THE LOCATION OF ALL EXISTING UNDERGROUND UTILITIES PRIOR TO EXCAVATION.
3. ALL SITE LIGHTING RACEWAYS SHALL BE 1" C. U.O.N.
4. ROUTE ALL SITE LIGHTING CIRCUITS VIA LIGHTING CONTROL SYSTEM.
5. PROVIDE ALL REQUIRED CUTTING, PATCHING, EXCAVATION, COMPACTION, AND PATCHING FOR INSTALLATION OF UNDERGROUND RACEWAYS AND UTILITY SERVICES.
6. BACKFILL ALL TRENCHES (INCLUDING THOSE FOR UTILITY SERVICES) WITH STRUCTURAL BACKFILL OR GRAVEL BORROW PER WSDOT STANDARDS.
7. THE CONTRACTOR IS SOLELY RESPONSIBLE FOR ALL COORDINATION WITH THE SERVING UTILITY COMPANIES INCLUDING COMPLETING AND SUBMITTING ALL NECESSARY APPLICATIONS FOR SERVICE.
8. CONTRACTOR TO OBTAIN ALL REQUIRED PERMITS AND EASEMENTS.

DOOR HARDWARE

1. PROVIDE ALL RACEWAYS AND WIRING REQUIRED TO INSTALL ELECTRONIC DOOR HARDWARE. REFER TO DOOR HARDWARE SPECIFICATIONS, SCHEDULES AND DIAGRAMS.

LIGHTING CONTROL PANELS (LCP)

1. DOWNSTREAM OF A PANELBOARD WITH AN AIC RATING OF 14,000 ASYM OR LESS: LOCATE LCP A MINIMUM OF 2'-0" FROM THE PANELBOARD.
2. DOWNSTREAM OF A PANELBOARD WITH AN AIC RATING GREATER THAN 14,000 ASYM: LOCATE A LCP A MINIMUM OF 10'-0" FROM THE PANELBOARD.

LIGHTING REQUIREMENTS

THE FOLLOWING GENERAL NOTES APPLY TO ALL LIGHTING PLAN DRAWINGS

1. REFER TO ARCHITECTURAL REFLECTED CEILING PLANS AND ELEVATIONS FOR EXACT LOCATION OF LUMINAIRES.
2. WHERE THERE IS A CONFLICT ARCHITECTURAL PLANS SHALL GOVERN.
3. COORDINATE THE FINAL LOCATION OF LUMINAIRES IN MECHANICAL ROOMS AND ATTIC SPACES TO AVOID CONFLICTS WITH DUCT WORK, PIPING, AND MECHANICAL EQUIPMENT.
4. ROUTE ALL EXTERIOR LIGHTING CIRCUITS VIA LIGHTING CONTROL PANEL.
5. INSTALL AND WIRE REMOTE DRIVERS. REFER TO LUMINAIRE SCHEDULE. MOUNT IN ACCESSIBLE LOCATIONS. SHOW LOCATIONS ON THE AS-BUILT DRAWINGS.

POWER REQUIREMENTS

THE FOLLOWING GENERAL NOTES APPLY TO ALL POWER PLAN DRAWINGS

1. CIRCUIT ALL FIRE/SMOKE DAMPERS AND SMOKE DAMPERS FROM NEAREST 120V EMERGENCY PANEL WITH ¾"-3#12. UTILIZE SPARE 20A-1P BREAKER PROVIDED. RECORD CIRCUITING ON AS-BUILT PANEL SCHEDULES AND DRAWINGS. REFER TO MECHANICAL DRAWINGS FOR DAMPER LOCATIONS.
2. COORDINATE LOCATIONS OF BAS CONTROL POWER WITH THE CONTROLS CONTRACTOR PRIOR TO ROUGH-IN.
3. PRIOR TO ORDERING EQUIPMENT OR ROUGH-IN, COORDINATE WITH THE MECHANICAL CONTRACTOR TO ESTABLISH THE ACTUAL LOAD AND OVERCURRENT PROTECTION REQUIREMENTS FOR EACH PIECE OF EQUIPMENT.
4. REFER TO MECHANICAL EQUIPMENT CONNECTION SCHEDULE FOR EQUIPMENT RATINGS AND FEEDER SIZES.
5. PROVIDE DISCONNECT SWITCH OR COMBINATION STARTER FOR EACH PIECE OF EQUIPMENT AS SHOWN ON MECHANICAL EQUIPMENT CONNECTION SCHEDULE.
6. PRIOR TO ROUGH-IN OF ALL EQUIPMENT SPECIFIED BY OTHER DIVISIONS, COORDINATE WITH THE EQUIPMENT MANUFACTURER TO ESTABLISH ALL REQUIREMENTS FOR EACH PIECE OF EQUIPMENT.
7. ALL EXTERIOR RECEPTACLES SHALL BE WP/GFCI.
8. ALL EXTERIOR DISCONNECTS/STARTERS SHALL BE NEMA 3R.
9. FEEDER ROUTING SHOWN IS APPROXIMATE. COORDINATE WITH MECHANICAL SYSTEMS AND BUILDING STRUCTURE. PROVIDE OFFSETS AS REQUIRED.
10. ALL RECEPTACLES WITHIN 6 FEET OF A SINK SHALL BE GFCI TYPE.
11. COORDINATE WITH THE ELEVATOR SHOP DRAWINGS AND THE ELEVATOR INSPECTOR PRIOR TO ROUGH-IN OF THE ELEVATOR MACHINE ROOM.
12. ALL HEAT TRACE AND SNOW MELT EQUIPMENT CIRCUITS SHALL BE FED WITH GFPE CIRCUIT BREAKERS.
13. PROVIDE 120-1ϕ HARDWIRED CONNECTION TO EACH TRAP PRIMER FROM NEAREST ADJACENT GENERAL RECEPTACLE CIRCUIT UTILIZING ½" - 3#12. REFER TO MECHANICAL DRAWINGS FOR LOCATIONS. RECORD CIRCUITING ON AS-BUILT PANEL SCHEDULES AND DRAWINGS.
14. PROVIDE TAMPER RESISTANT RECEPTACLES IN ALL CLASSROOMS PER NEC 406.12(4).

EQUIPMENT CONNECTIONS

1. PROVIDE ALL RACEWAYS, WIRING AND ANCILLARY EQUIPMENT AS SHOWN ON MANUFACTURER SHOP DRAWINGS.
2. PROVIDE HARDWIRED CONNECTION, RECEPTACLE OR FUSED DISCONNECT SWITCH AS SHOWN ON MANUFACTURER SHOP DRAWINGS.

FIRE ALARM SYSTEM

1. THE CONTRACTOR SHALL PROVIDE A COMPLETE AND OPERATIONAL FIRE ALARM SYSTEM (DEVICES, RACEWAYS AND WIRING) PER THE FIRE MARSHAL'S REQUIREMENTS.
2. THE DEVICES AND RACEWAYS SHOWN ON THE DRAWINGS ARE FOR GENERAL INFORMATION ONLY TO ASSIST THE CONTRACTOR IN PREPARING HIS BID. THE CONTRACTOR SHALL PROVIDE SITE SPECIFIC FIRE ALARM SHOP DRAWINGS INCLUDING WIRING DETAILS AND BATTERY CALCULATIONS.
3. THE CONTRACTOR SHALL PROVIDE ALL CUTTING, PATCHING AND PAINTING REQUIRED TO ALLOW FOR INSTALLATION OF THE SYSTEM.
4. FIRE ALARM SYSTEM WIRING SHALL BE RUN IN CONTINUOUS METALLIC RACEWAYS.
5. PROVIDE ADDRESSABLE DUCT DETECTOR AT EACH FIRE/SMOKE DAMPER (FSD) AND SMOKE DAMPER (SD) LOCATION. REFER TO MECHANICAL DRAWINGS FOR LOCATIONS.
6. PROVIDE FA CONNECTION TO FIRE SPRINKLER TAMPER, FLOW, AND PRESSURE SWITCHES. REFER TO MECHANICAL DRAWINGS FOR LOCATIONS.
7. PROVIDE EXTERIOR FIRE ALARM BELL AND STROBE AT LOCATION DIRECTED BY FIRE MARSHAL.

LOW VOLTAGE SYSTEMS REQUIREMENTS

THE FOLLOWING GENERAL NOTES APPLY TO ALL LOW VOLTAGE SYSTEMS PLAN DRAWINGS

1. MINIMUM RACEWAY SIZE SHALL BE 1" FOR TELECOMMUNICATIONS CABLING AND ¾" FOR ALL OTHER SYSTEMS.
2. ALL SYSTEMS WIRING EXCEPT FIRE ALARM SHALL BE RUN UTILIZING OPEN WIRING METHOD ABOVE ACCESSIBLE CEILINGS. PROVIDE METALLIC RACEWAYS FOR WIRING INSTALLED IN WALLS, ABOVE INACCESSIBLE CEILING, WHERE EXPOSED OR WHERE SUBJECT TO PHYSICAL DAMAGE. RACEWAY FILL SHALL NOT EXCEED 40%.
3. PROVIDE ¾" A-C FIRE RETARDANT PLYWOOD ON ALL FOUR WALLS OF THE MDF AND EACH IDF. MOUNT 8' DIMENSION VERTICAL. PAINT FLAT WHITE.
4. PROVIDE 1¼" C. FROM EACH FLOOR BOX OR POKE THRU TO ACCESSIBLE CEILING LOCATION. THIS IS IN ADDITION TO THE RACEWAYS SHOWN ON THE DRAWINGS.
5. ALL EXTERIOR DEVICES SHALL BE WEATHERPROOF.
6. PROVIDE CONNECTION TO FIRE SPRINKLER DOUBLE CHECK VALVE ASSEMBLIES AND PIV'S. REFER TO CIVIL/MECHANICAL DRAWINGS FOR LOCATIONS.
7. STAPLES SHALL NOT BE USED TO SECURE LOW VOLTAGE CABLING.

ONE-LINE DIAGRAM

1. PROVIDE PULL BOXES AS REQUIRED BY THE NEC.
2. SHORT CIRCUIT CURRENTS LESS THAN 10,000 ASYM FOR 208V PANELS AND 14,000 ASYM FOR 480V PANELS ARE NOT SHOWN.
4. THE ONE-LINE DIAGRAM IS DIAGRAMMATIC AND DOES NOT SHOW THE ACTUAL ROUTING OF THE RACEWAYS.
5. FOR TWO SECTION PANELS PROVIDE FULL SIZE FEEDER CONNECTIONS FROM SECTION 1 TO SECTION 2.
6. THE ELECTRICAL DISTRIBUTION SYSTEM SHALL BE FULLY RATED. A SERIES RATED SYSTEM IS NOT ACCEPTABLE.
7. ALL TRANSFORMERS ARE 480V 3 PHASE 3 WIRE PRIMARY: 208Y/120V 3 PHASE, 4 WIRE SECONDARY, DOE 2016 RATED, U.O.N.
8. NOT ALL CIRCUIT BREAKERS ARE SHOWN. REFER TO PANEL AND SWITCHBOARD SCHEDULES FOR OTHER LOADS SERVED, AND SPARE CIRCUIT BREAKERS.
9. CONTRACTOR TO PROVIDE COORDINATION AND ARC FLASH STUDY. ALL DISTRIBUTION SYSTEM EQUIPMENT SHALL BE RATED FOR THE AVAILABLE FAULT CURRENT AND SHALL BE LABELED WITH THE ARC FLASH HAZARD CATEGORY AND AVAILABLE FAULT CURRENT. ALL NEC 700 AND 701 PORTIONS OF THE DISTRIBUTION SYSTEM SHALL BE SELECTIVELY COORDINATED.
10. SET ALL OVERCURRENT DEVICES PER THE COORDINATION STUDY.
11. TEST ALL GROUND FAULT RELAYS AS REQUIRED BY THE WAC.
12. TRANSFORMER SECONDARY CONDUCTORS SHALL BE NO MORE THAN 10-FEET LONG PER NEC ARTICLE 240.21 (C) 2.
13. CIRCUIT BREAKERS RATED 800 AMPS OR MORE: PROVIDE ELECTRONIC TRIP UNIT WITH ADJUSTABLE LONG TIME, SHORT TIME AND INSTANTANEOUS (LSI) TRIP FUNCTIONS. PROVIDE GROUND FAULT PROTECTION (G) WHERE CALLED OUT ON THE ONE-LINE DRAWING. TRIP UNITS SHALL BE FIELD REPLACEABLE.
14. CIRCUIT BREAKERS RATED 1200 AMPS OR MORE: PROVIDE TRIP UNIT WITH A MAINTENANCE MODE SWITCH WITH LED INDICATOR LIGHT WHICH OVERRIDES THE TRIP SETTINGS IN ORDER TO MINIMIZE THE ARC FLASH HAZARD DURING MAINTENANCE. TRIP UNITS SHALL BE FIELD REPLACEABLE.
15. PROVIDE GROUNDING AND BONDING OF ELECTRICAL POWER DISTRIBUTION EQUIPMENT PER NEC ARTICLE 250.

WASHINGTON STATE NONRESIDENTIAL ENERGY CODE COMPLIANCE

1. LIGHTING: THE CONTRACTOR SHALL PROVIDE A WRITTEN CERTIFICATION VERIFYING THAT ALL LAMPS AND BALLASTS HAVE BEEN PROVIDED PER THE SPECIFICATIONS. PROVIDE A LIST WHICH INDICATES THE EXACT PART NUMBER OF THE LAMP AND BALLAST PROVIDED FOR EACH FIXTURE TYPE. INCLUDE THE CERTIFICATION AND THE LAMP/BALLAST LIST IN THE O&M MANUAL.
2. COMMISSIONING REQUIREMENTS: ALL LIGHTING CONTROLS INCLUDING DAYLIGHT OR OCCUPANT SENSING AUTOMATIC CONTROLS, AUTOMATIC SHUT OFF CONTROLS, OCCUPANCY SENSORS OR AUTOMATIC TIME SWITCHES, THE LIGHTING CONTROLS SHALL BE TESTED TO ENSURE THAT CONTROL DEVICES, COMPONENTS, EQUIPMENT AND SYSTEMS ARE CALIBRATED, ADJUSTED AND OPERATE IN ACCORDANCE WITH APPROVED PLANS AND SPECIFICATIONS. SEQUENCE OF OPERATIONS SHALL BE FUNCTIONALLY TESTED TO ENSURE THEY OPERATE IN ACCORDANCE WITH APPROVED PLANS AND SPECIFICATIONS. THE CONTRACTOR SHALL PROVIDE A WRITTEN STATEMENT CERTIFYING ALL LIGHTING CONTROLS HAVE BEEN COMMISSIONED. INCLUDE CERTIFICATION IN O&M MANUAL.
3. TRANSFORMERS: THE MINIMUM EFFICIENCY OF ALL LOW VOLTAGE DRY-TYPE DISTRIBUTION TRANSFORMERS SHALL BE THE CLASS 1 EFFICIENCY LEVELS FOR DISTRIBUTION TRANSFORMERS SPECIFIED IN TABLE 4-2 OF THE "GUIDE FOR DETERMINING ENERGY EFFICIENCY FOR DISTRIBUTION TRANSFORMERS" PUBLISHED BY THE NATIONAL ELECTRICAL MANUFACTURERS ASSOCIATION (NEMA TP-1, LATEST EDITION).

BRANCH CIRCUIT WIRING

THE FOLLOWING GENERAL NOTES APPLY TO ALL DRAWINGS

1. IN GENERAL ONLY CIRCUIT NUMBERS HAVE BEEN SHOWN ON THE DRAWINGS. THE CONTRACTOR SHALL PROVIDE ALL REQUIRED RACEWAYS AND WIRING.
2. SHOW ALL RACEWAYS AND WIRING ON AS-BUILT DRAWINGS.
3. MINIMUM RACEWAY SIZE SHALL BE ¾".
4. NO MORE THAN 7 #12 AWG CONDUCTORS SHALL BE INSTALLED IN A RACEWAY.
5. HOMERUNS GREATER THAN 75 FEET TO THE FIRST DEVICE SHALL BE NO. 10 AWG.
6. LIGHTING, POWER, AND MECHANICAL EQUIPMENT CONDUCTORS SHALL NOT BE COMBINED IN THE SAME RACEWAY.
7. PROVIDE A GROUND CONDUCTOR IN ALL RACEWAYS.
8. PROVIDE A DEDICATED NEUTRAL CONDUCTOR FOR EACH BRANCH CIRCUIT.
9. PROVIDE CONDUCTORS AS REQUIRED TO PROVIDE CIRCUITING AND SWITCHING DUTY AS SHOWN ON THE DRAWINGS.
10. FOR OTHER THAN 15 OR 20 AMP SINGLE PHASE RECEPTACLE BRANCH CIRCUITS PROVIDE A DEDICATED HOMERUN TO THE PANEL.
11. FOR 30 AMP BRANCH CIRCUITS PROVIDE #10 AWG CONDUCTORS.
12. FOR 40 AMP AND LARGER BRANCH CIRCUITS PROVIDE RACEWAYS AND WIRING AS SHOWN ON THE DRAWINGS.
13. GENERAL:
    - 13.A. 120V BRANCH CIRCUIT HOMERUNS GREATER THAN 90 FEET TO THE FIRST DEVICE SHALL HAVE CONDUCTORS INCREASED ONE GAUGE SIZE FOR EVERY 60' OF LENGTH.
    - 13.B. 208V BRANCH CIRCUIT HOMERUNS GREATER THAN 125 FEET TO THE FIRST DEVICE SHALL HAVE CONDUCTORS INCREASED ONE GAUGE SIZE FOR EVERY 75' OF LENGTH.
    - 13.C. 277V BRANCH CIRCUIT HOMERUNS GREATER THAN 175 FEET TO THE FIRST DEVICE SHALL HAVE CONDUCTORS INCREASED ONE GAUGE SIZE FOR EVERY 100' OF LENGTH.
    - 13.D. 480V BRANCH CIRCUIT HOMERUNS GREATER THAN 300 FEET TO THE FIRST DEVICE SHALL HAVE CONDUCTORS INCREASED ONE GAUGE SIZE FOR EVERY 200' OF LENGTH.
    - 13.E. LIGHTING, POWER AND MECHANICAL EQUIPMENT CONDUCTORS SHALL NOT BE COMBINED IN THE SAME RACEWAY.
    - 13.F. PROVIDE A GROUND CONDUCTOR IN ALL RACEWAYS.

ZERVAS
ARCHITECTURE | INTERIOR DESIGN
zervasgroup.com
209 Prospect Street
Bellingham, WA 98225
360.734.4744

COFFMAN ENGINEERS
1101 2nd Avenue,
Suite 400
Seattle, WA 98101
ph 206.623.0717
www.coffman.com

CHRISTOPHER J. BAKER — STATE OF WASHINGTON — 31344 — REGISTERED PROFESSIONAL ENGINEER
1/25/2024

City of Puyallup
Development & Permitting Services
ISSUED PERMIT
Building | Planning | Engineering | Public Works | Fire | Traffic

100% CD SET

REV	ISSUED FOR	DATE

SCALE: NONE

PSE - OPERATIONAL TRAINING CENTER

GENERAL NOTES

PROJECT No:	221158
DRAWN BY:	RMF
CHECKED BY:	CJB
DATE ISSUED:	01/26/24

E0.02

© 2022

PRCNC20240216

LIGHTING FIXTURE SCHEDULE

TYPE	DESCRIPTION	LAMP TYPE	BALLAST/DRIVER	WATTS	MANUFACTURER INFORMATION	NOTES
EX1	LED ALUMINUM EXIT SIGN SINGLE FACE EXTRUDED BRUSHED ALUMINUM HOUSING, CLEAR ACRYLIC PANELS, LETTERS MEASURE 6" HIGH WITH 3/4" STROKE, UNIVERSAL MOUNTING, GREEN LETTER COLOR, FIVE YEAR WARRANTY INCLUDING LEDS.	1.5W LED GREEN	INTEGRAL ELECTRONIC DRIVER	2/2	PHILIPS 55L SERIES	3
EX2	LED ALUMINUM EXIT SIGN DOUBLE FACE EXTRUDED BRUSHED ALUMINUM HOUSING, CLEAR ACRYLIC PANELS, LETTERS MEASURE 6" HIGH WITH 3/4" STROKE, UNIVERSAL MOUNTING, GREEN LETTER COLOR, FIVE YEAR WARRANTY INCLUDING LEDS.	(2) 1.5W LED WHITE	INTEGRAL ELECTRONIC DRIVER	3/3	PHILIPS VU6L SERIES	3
LP1	POLE AREA LUMINAIRE – SINGLE HEAD DIE–CAST ALUMINUM HOUSING, LOW PROFILE ROUNDED FORM, DIE–CAST ALUMINUM INTEGRAL THERMAL RADIATION FINS, TEXTURED POLYESTER POWDERCPAT FINISH, 3G VIBRATION, TYPE IV DISTRIBUTION, LASS LENS, BIRD DETERRENT SPIKE KIT, UL LISTED FOR WET LOCATION. 25FT POLE.	(1) 75W LED 4000K 10401 LUMENS	INTEGRAL ELECTRONIC DRIVER	75/75	GARDCO P26 SERIES	
LP2	POLE AREA LUMINAIRE – DOUBLE HEAD DIE–CAST ALUMINUM HOUSING, LOW PROFILE ROUNDED FORM, DIE–CAST ALUMINUM INTEGRAL THERMAL RADIATION FINS, TEXTURED POLYESTER POWDERCPAT FINISH, 3G VIBRATION, TYPE IV DISTRIBUTION, LASS LENS, BIRD DETERRENT SPIKE KIT, UL LISTED FOR WET LOCATION. 25FT POLE.	(2) 75W LED 4000K 10401 LUMENS	INTEGRAL ELECTRONIC DRIVER	150/150	GARDCO P26 SERIES	
PL1	PENDANT LED CONTINUOUS RUN LINEAR DIRECT/INDIRECT LUMINAIRE GAUGE COLD ROLLED STEEL, PRECISION FORMED HOUSING, MESO OPTICS FILM WITH NON–GLARE ACRYLIC LENS, 80% DIRECT/20% INDIRECT, SOLID FLAT ENDCAP, SUSPENDED WITH AIRCRAFT CABLE	21W LED 3000K 3400 LUMENS	REMOTE ELECTRONIC DIMMING DRIVER	32/32	LEDALITE BOLDPLAY SERIES	2
PL2	PENDANT LINEAR LED STRIPLIGHT 22 GAUGE DIE. FORMED COLD ROLLED STEEL, WITH DIFFUSE ACRYLIC LENS.	23W LED 3000K 3200 LUMENS	INTEGRAL ELECTRONIC DRIVER	23/23	H.E. WILLIAMS 75R SERIES	2
PL3	PENDANT LED HIGH BAY EXTRUDED ALUMINUM HOUSING AND HEAT SYNC, UV STABLE FROSTED POLYMERIC MATERIAL AND WIRE GUARD, WIDE DISTRIBUTION	177W LED 3000K 22860 LUMENS	INTEGRAL ELECTRONIC DRIVER	177/177	FLEXTRONICS ESP–UL SERIES	2
PL4	PENDANT LINEAR LED VAPORTITE ONE–PIECE COMPRESSION MOLDED, UNSATURATED POLYESTER/FIBERGLASS HOUSING, STAINLESS STEEL LATCH SET, WET LOCATION LISTED, IP65/67 WET LOCATION, NEMA 4X	30W LED 3000K 3602 LUMENS	INTEGRAL ELECTRONIC DRIVER	30/30	ILP WTZ30WLED SERIES	2
DB1	RECESSED 6" LED DOWNLIGHT					
DL1	RECESSED 6" LED DOWNLIGHT PRECISION DIE STAMPED 18 GAUGE GALVANIZED STEEL MOUNTING PAN AND YHOKE ASSEMBLY, MAXIMUM CEILING THICKNESS UP TO 1–1/8", PRECISION SPUN 0.050 ALUMINUM REFLECTORS ARE SELF FLANGED AND SNAP TO HEAT SYNC FOR CONSISTENT ALIGNMENT TO THE OPTICAL ASSEMBLY, PROVIDES 50 DEGREE VISUAL CUT–OFF, 16 GUAGE GALVANIZED STEEL JUNCTION BOX, INTEGRAL DRIVER	21W LED 3000K 1500 LUMENS	INTEGRAL ELECTRONIC DRIVER	21/21	PHILIPS C6L SERIES	2
TF1	RECESSED LED 1X4 LED LINEAR DIE–FORMED, POST PAINTED 22 GAUGE COLD ROLLED STEEL, ACRYLIC LENS WITH MESO OPTICS FILM, POWDER COAT FINISH	44W LED 3000K 3600 LUMENS	INTEGRAL ELECTRONIC DRIVER	44/44	LEDALITE VECTRA SERIES	
RL1	CONTINOUS RECESSED LED LINEAR LUMINAIRE EXTRUDED ALUMINUM HOUSING, DIFFUSE ACRYLIC SNAP–IN LENS	8W/FT LED 3000K 800 LUMENS/FT	INTEGRAL ELECTRONIC DRIVER	8W/FT	H.E. WILLIAMS LX4RT SERIES	2
SL1	LINEAR LED STRIPLIGHT FULL FROSTED LENS–WIDE,	32.1W LED 4000K 4586 LUMENS/FT	INTEGRAL ELECTRONIC DRIVER	32/32	METALUX SNX LENSED	
WL1	LED EXTERIOR WALL SCONCE DIE–CAST ALUMINUM HOUSING WITH INTEGRAL RADIATION FINS FOR THERMAL MANAGEMENT, TYPE III DISTRIBUTION	35W LED 4000K 2975 LUMENS	INTEGRAL ELECTRONIC DRIVER	35/35	GARDCO 107L SERIES	
WL2	LED EXTERIOR WALL SCONCE DIE–CAST ALUMINUM HOUSING WITH INTEGRAL RADIATION FINS FOR THERMAL MANAGEMENT, TYPE III DISTRIBUTION	55W LED 4000K 5050 LUMENS	INTEGRAL ELECTRONIC DRIVER	55/55	GARDCO 107L SERIES	

SCHEDULE GENERAL NOTES:
A. DESCRIPTIONS ARE BASED ON MANUFACTURER'S INFORMATION LUMINAIRE DESIGN SERIES; SUBMITTAL PART NUMBERS SHALL BE BASED ON WRITTEN DESCRIPTIONS.
B. LED FIXTURES TO BE CERTIFIED ENERGY STAR, DESIGN LIGHTS CONSORTIUM OR ACCEPTED AND LISTED BY THE LIGHTING DESIGN LAB. DOCUMENTATION OF CERTIFICATION OR LISTING TO BE PROVIDED WITH FIXTURE SUBMITTALS.
C. LED FIXTURES TO HAVE NO LESS THAN 80 CRI.
D. ALL LED FIXTURES TO HAVE A 5 YEAR WARRANTY.
E. LED FIXTURES TO BE COMPLIANT WITH ROHS (RESTRICTION OF THE USE OF CERTAIN HAZARDOUS SUBSTANCE IN ELECTRICAL AND ELECTRONIC EQUIPMENT REGULATIONS).
F. LED FIXTURES TO HAVE A LUMENS PER WATT EFFICACY OF GREATER THAN 65%.
SCHEDULE NOTES:
1. PROVIDE WIRE GUARD AND LAMP SLEEVES.
2. PROVIDE DIMMING DRIVER.
3. EGRESS FIXTURE WILL BE BACKED UP BY INVERTER SYSTEM WITH 90 MIN BATTERY CAPACITY.

GENERAL NOTES

1. REFER TO ADDITIONAL NOTES ON DRAWING E0.2.
2. THE UNDERLINED LUMINAIRE IN THE SCHEDULE REPRESENTS THE "BASIS OF DESIGN". ALL OTHER MANUFACTURERS LISTED MUST MEET OR EXCEED ALL REQUIREMENTS OF THE BASIS OF DESIGN.
3. VERIFY THE VOLTAGE OF ALL LUMINAIRES. REFER TO PLANS FOR SPECIFIC VOLTAGE REQUIREMENTS.
4. ALL LUMINAIRES TO BE PROVIDED WITH ALL ROUGH–IN AND TRIM ASSEMBLIES FOR A COMPLETE INSTALLATION.
5. ALL LUMINAIRES TO BE PROVIDED WITH A CUSTOM COLOR/FINISH AS SELECTED BY THE ARCHITECT, UNLESS OTHERWISE NOTED.
6. ALL LUMINAIRES TO BE UL LISTED AND LABELED. EXTERIOR LUMINAIRES TO BE UL "WET" LABELED.
7. LUMINARES SHALL BE PROVIDED WITH AN INTERNAL DISCONNECTING MEANS WHICH COMPLIES WITH NEC ARTICLE 410.
8. ALL FLUORESCENT AND HID BALLASTS TO BE PROVIDED WITH AN IN–LINE FUSE.
9. ALL LUMINAIRES TO HAVE AN INTEGRAL BALLAST UNLESS A REMOTE BALLAST IS SPECIFIED.
10. TANDEM OR THROUGH–WIRED BALLASTS ARE NOT ALLOWED. PROVIDE A SEPARATE BALLAST FOR EVERY 4' LUMINAIRE 'SECTION'.
11. PROVIDE WIRE GUARDS AND PLASTIC LAMP SLEEVES FOR ALL FLUORESCENT LINEAR STRIP LUMINAIRES.
12. FOR HID LUMINAIRES FED FROM THE GENERATOR PROVIDE QUARTZ RESTRIKE WITH STANDBY TIME DELAY PER UL 1598. QUARTZ LAMP IS KEPT ON UNTIL THE HID LAMP REACHES 80% OF FULL LIGHT OUTPUT.
13. ALL METAL HALIDE LAMPS/BALLASTS SHALL BE PULSE START.
14. PROVIDE GLARE SHIELDS FOR ALL POLE MOUNTED LUMINAIRE.
15. THE CONTRACTOR SHALL REVIEW THE ARCHITECTURAL INTERIOR ELEVATIONS AND THE CASEWORK MANUFACTURER SHOP DRAWINGS TO DETERMINE THE LENGTH OF UNDER CABINET LUMINAIRE.
16. REFER TO ARCHITECTURAL ELEVATIONS TO DETERMINE PENDANT LENGTH.
17. REFER TO THE SPECIFICATIONS AND DRAWINGS FOR ADDITIONAL REQUIREMENTS.
18. AIM ADJUSTABLE LUMINAIRES AS DIRECTED BY THE ENGINEER.

SPECIAL REQUIREMENTS FOR ALL LED LUMINAIRES

1. LUMINAIRES SHALL BE CERTIFIED BY ENERGY STAR, DESIGN LIGHTS CONSORTIUM, OR THE LIGHTING DESIGN LAB LED CERTIFICATION PROGRAM.
2. MINIMUM CRI SHALL BE 80.
3. MANUFACTURER SHALL PROVIDE A 5–YEAR WARRANTY.
4. LUMINAIRES SHALL COMPLY WITH ROHS (RESTRICTION OF THE USE OF HAZARDOUS SUBSTANCES IN ELECTRICAL AND ELECTRONIC EQUIPMENT) REGULATIONS. APPLICABLE FOR LEED PROJECTS ONLY.
5. MINIMUM LUMENS PER WATT EFFICACY SHALL BE 65%.

SUBSTITUTIONS

1. NO POST BID SUBSTITUTIONS WILL BE CONSIDERED.
2. WHERE ONLY ONE MANUFACTURER IS LISTED, PRE–BID SUBSTITUTIONS WILL ONLY BE CONSIDERED IF A SAMPLE OF THE FIXTURE IS PROVIDED.

ZERVAS
ARCHITECTURE | INTERIOR DESIGN
zervasgroup.com
209 Prospect Street
Bellingham, WA 98225
360.734.4744

COFFMAN ENGINEERS
1101 2nd Avenue,
Suite 400
Seattle, WA 98101
ph 206.623.0717
www.coffman.com

CHRISTOPHER J. BAKER — STATE OF WASHINGTON — 31344 — REGISTERED PROFESSIONAL ENGINEER
1/25/2024

City of Puyallup
Development & Permitting Services
ISSUED PERMIT
Building | Planning | Engineering | Public Works | Fire | Traffic

100% CD SET

REV	ISSUED FOR	DATE

SCALE: NONE

PSE - OPERATIONAL TRAINING CENTER

LUMINAIRE SCHEDULE

PROJECT No:	221158
DRAWN BY:	RMF
CHECKED BY:	CJB
DATE ISSUED:	01/26/24

E0.03

© 2022

PRCNC20240216

ZERVAS
ARCHITECTURE | INTERIOR DESIGN
zervasgroup.com
209 Prospect Street
Bellingham, WA 98225
360.734.4744

MECHANICAL EQUIPMENT CONNECTION SCHEDULE

HVAC SCHEDULE

EQUIP. NO.	DESCRIPTION	LOCATION	HP	KW	FLA	MCA	MOCP	VOLTAGE	PHASE	DISCONNECT	STARTER	FEEDER	CIRCUITING	NOTES
DOAS-R-01	DOAS UNIT	OTC BUILDING EAST				86		480	3	100AF/100AS	CTR PNL	2" – 3#2 & 1#8G	NH2-1,3,5	
DOAS-06-01	DOAS UNIT	CONTROL HOUSE				4.3		208	1	20AF/30AS	CTR PNL	3/4" – 2#12 & 1#12G	NL8-21,23	
CU-R-01A	VRF HP CONDENSING UNIT	OTC NORTH				14		480	3	20AF/30AS	CTR PNL	3/4" – 3#12 & 1#12G	NH2-7,9,11	3
CU-R-01B	VRF HP CONDENSING UNIT	OTC NORTH				14		480	3	20AF/30AS	CTR PNL	3/4" – 3#12 & 1#12G	NH2-13,15,17	3
CU-R-02A	VRF HP CONDENSING UNIT	OTC EAST				14		480	3	20AF/30AS	CTR PNL	3/4" – 3#12 & 1#12G	NH2-19-21-23	3
CU-R-02B	VRF HP CONDENSING UNIT	OTC EAST				14		480	3	20AF/30AS	CTR PNL	3/4" – 3#12 & 1#12G	NH2-25,27,29	3
CU-R-03A	VRF HP CONDENSING UNIT	OTC SOUTH				33		480	3	40AF/60AS	CTR PNL	1" – 3#8 & 1#10G	NH2-31,33,35	3
CU-R-03B	VRF HP CONDENSING UNIT	OTC SOUTH				33		480	3	40AF/60AS	CTR PNL	1" – 3#8 & 1#10G	NH2-37,39,41	3
CU-R-04A	VRF HP CONDENSING UNIT	OTC WEST				33		480	3	40AF/60AS	CTR PNL	1" – 3#8 & 1#10G	NH2-2,4,6	3
CU-R-04B	VRF HP CONDENSING UNIT	OTC WEST				33		480	3	40AF/60AS	CTR PNL	1" – 3#8 & 1#10G	NH2-8,10,12	3
CU-R-05	VRF HP CONDENSING UNIT	MAIN ELECTRICAL HOUSE				14		480	3	20AF/30AS	CTR PNL	3/4" – 3#12 & 1#12G	NH2-14,16,18	
CU-06-01	VRF HP CONDENSING UNIT	CONTROL HOUSE				14		480	3	20AF/30AS	CTR PNL	3/4" – 3#12 & 1#12G	NH2-20,22,24	
MUA-R-01	MAKE-UP AIR UNIT	APPLIANCE LAB				103.8		480	3	125AF/200AS	CTR PNL	2" – 3#1 &1#6G	NH2-26,28,30	
BC-01-01	BRANCH CONTROLLER	OTC NORTH				0.8		208	1	20AF/30AS	CTR PNL	3/4" – 2#12 & 1#12G	NL4A-5,7	
BC-01-02	BRANCH CONTROLLER	OTC EAST				0.8		208	1	20AF/30AS	CTR PNL	3/4" – 2#12 & 1#12G	NL4A-5,7	
BC-01-03	BRANCH CONTROLLER	OTC SOUTH				1.6		208	1	20AF/30AS	CTR PNL	3/4" – 2#12 & 1#12G	NL4A-5,7	
BC-01-04	BRANCH CONTROLLER	OTC WEST				1.6		208	1	20AF/30AS	CTR PNL	3/4" – 2#12 & 1#12G	NL4A-5,7	
EF-R-01	EXHAUST FAN	APPLIANCE LAB			12.5			208	1	20AF/30AS	CTR PNL	3/4" – 2#12 & 1#12G	NL4A-9,11	1
SF-06-01	SUPPLY FAN	COMPRESSOR BUILDING			3			480	3	6.25AF/30AS	CTR PNL	3/4" – 3#12 & 1#12G	NH3-2,4,6	
SF-06-02	SUPPLY FAN	COMPRESSOR BUILDING			3			480	3	6.25AF/30AS	CTR PNL	3/4" – 3#12 & 1#12G	NH3-8,10,12	
EH-01-01	WALL MOUNT HEATER	EAST VESTIBULE			15			120	1	HRS	CTR PNL	1/2" – 2#12 & 1#12G	NL4B-1	
EH-01-02	WALL MOUNT HEATER	FIRE RISER/MECH			6.3			120	1	HRS	CTR PNL	1/2" – 2#12 & 1#12G	NL4B-3	
EH-01-03	WALL MOUNT HEATER	MECHANICAL			8.4			120	1	HRS	CTR PNL	1/2" – 2#12 & 1#12G	NL4B-5	
EH-01-04	WALL MOUNT HEATER	SOUTHWEST VESTIBULE			8.4			120	1	HRS	CTR PNL	1/2" – 2#12 & 1#12G	NL4B-7	
EH-01-05	WALL MOUNT HEATER	TOILET			15			120	1	HRS	CTR PNL	1/2" – 2#12 & 1#12G	NL4B-9	
EH-01-06	WALL MOUNT HEATER	TOILET			15			120	1	HRS	CTR PNL	1/2" – 2#12 & 1#12G	NL4B-11	
EH-01-07	WALL MOUNT HEATER	NORTHWEAST VESTIBULE			15			120	1	HRS	CTR PNL	1/2" – 2#12 & 1#12G	NL4B-13	
EH-01-08	WALL MOUNT HEATER	ICE MACHINE			4.2			120	1	HRS	CTR PNL	1/2" – 2#12 & 1#12G	NL4B-15	
SCU-R-01	SPLIT AC CONDENSING UNIT	ROOF				25		208	1	30AF/30AS	CTR PNL	3/4" – 2#10 & 1#10G	NL4A-13,15	
SCU-R-02	SPLIT AC CONDENSING UNIT	ROOF				19		208	1	20AF/30AS	CTR PNL	3/4" – 2#12 & 1#12G	NL4A-17,19	
SCU-R-03	SPLIT AC CONDENSING UNIT	ROOF				11		208	1	20AF/30AS	CTR PNL	3/4" – 2#12 & 1#12G	NL4A-22,24	
FCU-01-01	VRF FAN COIL UNIT	ZONE 1				8.2		208	1	20AF/30AS	CTR PNL	3/4" – 2#12 & 1#12G	NL4A-21,23	
FCU-01-02	VRF FAN COIL UNIT	ZONE 2				2.88		208	1	20AF/30AS	CTR PNL	3/4" – 2#12 & 1#12G	NL4A-21,23	
FCU-01-03	VRF FAN COIL UNIT	ZONE 3				2.88		208	1	20AF/30AS	CTR PNL	3/4" – 2#12 & 1#12G	NL4A-25,27	
FCU-01-04	VRF FAN COIL UNIT	ZONE 4				2.88		208	1	20AF/30AS	CTR PNL	3/4" – 2#12 & 1#12G	NL4A-25,27	
FCU-01-05	VRF FAN COIL UNIT	ZONE 13				8.2		208	1	20AF/30AS	CTR PNL	3/4" – 2#12 & 1#12G	NL4A-25,27	
FCU-02-01	VRF FAN COIL UNIT	ZONE 5				4.38		208	1	20AF/30AS	CTR PNL	3/4" – 2#12 & 1#12G	NL4A-29,31	
FCU-02-02	VRF FAN COIL UNIT	ZONE 6				2.88		208	1	20AF/30AS	CTR PNL	3/4" – 2#12 & 1#12G	NL4A-29,31	
FCU-02-03	VRF FAN COIL UNIT	ZONE 7				7.7		208	1	20AF/30AS	CTR PNL	3/4" – 2#12 & 1#12G	NL4A-29,31	
FCU-02-04	VRF FAN COIL UNIT	ZONE 15				2.88		208	1	20AF/30AS	CTR PNL	3/4" – 2#12 & 1#12G	NL4A-33,35	
FCU-02-05	VRF FAN COIL UNIT	ZONE 16				2.94		208	1	20AF/30AS	CTR PNL	3/4" – 2#12 & 1#12G	NL4A-33,35	
FCU-03-01	VRF FAN COIL UNIT	ZONE 8				8.2		208	1	20AF/30AS	CTR PNL	3/4" – 2#12 & 1#12G	NL4A-37,39	
FCU-03-02	VRF FAN COIL UNIT	ZONE 8				8.2		208	1	20AF/30AS	CTR PNL	3/4" – 2#12 & 1#12G	NL4A-37,39	
FCU-03-03	VRF FAN COIL UNIT	ZONE 8				8.2		208	1	20AF/30AS	CTR PNL	3/4" – 2#12 & 1#12G	NL4A-2,4	
FCU-03-04	VRF FAN COIL UNIT	ZONE 8				8.2		208	1	20AF/30AS	CTR PNL	3/4" – 2#12 & 1#12G	NL4A-2,4	
FCU-04-01	VRF FAN COIL UNIT	ZONE 9				4.25		208	1	20AF/30AS	CTR PNL	3/4" – 2#12 & 1#12G	NL4A-6,8	
FCU-04-02	VRF FAN COIL UNIT	ZONE 10				8.2		208	1	20AF/30AS	CTR PNL	3/4" – 2#12 & 1#12G	NL4A-6,8	
FCU-04-03	VRF FAN COIL UNIT	ZONE 11				4.38		208	1	20AF/30AS	CTR PNL	3/4" – 2#12 & 1#12G	NL4A-10,12	
FCU-04-04	VRF FAN COIL UNIT	ZONE 12				7.7		208	1	20AF/30AS	CTR PNL	3/4" – 2#12 & 1#12G	NL4A-10,12	
FCU-04-05	VRF FAN COIL UNIT	ZONE 12				7.7		208	1	20AF/30AS	CTR PNL	3/4" – 2#12 & 1#12G	NL4A-14,16	
FCU-04-06	VRF FAN COIL UNIT	ZONE 14				4.38		208	1	20AF/30AS	CTR PNL	3/4" – 2#12 & 1#12G	NL4A-14,16	
FCU-05-01	VRF FAN COIL UNIT	ELECTRICAL				8.2		208	1	20AF/30AS	CTR PNL	3/4" – 2#12 & 1#12G	NL4A-18,20	
FCU-06-01	VRF FAN COIL UNIT	CONTROL HOUSE				8.2		240	1	20AF/30AS	CTR PNL	3/4" – 2#12 & 1#12G	NL8-21,23	
SFCU-01-01	SPLIT DX FAN COIL UNIT	COMM ROOM				2		208	1	20AF/30AS	CTR PNL	3/4" – 2#12 & 1#12G	SL2-1,3	
SFCU-02-01	SPLIT DX FAN COIL UNIT	SECURITY				1		208	1	20AF/30AS	CTR PNL	3/4" – 2#12 & 1#12G	SL3-1,3	
SFCU-03-01	SPLIT DX FAN COIL UNIT	IDF				1		208	1	20AF/30AS	CTR PNL	3/4" – 2#12 & 1#12G	SL1-28,30	

PLUMBING EQUIPMENT SCHEDULE

EQUIP. NO.	DESCRIPTION	LOCATION	HP	KW	FLA	MCA	MOCP	VOLTAGE	PHASE	DISCONNECT	STARTER	FEEDER	CIRCUITING	NOTES
GWH-2	GAS WATER HEATER	APPLIANCE LAB			1			120	1	HRS	CTR PNL	1/2" – 2#12 & 1#12G	NL4B-17	
GWH-3	GAS WATER HEATER	APPLIANCE LAB			1			120	1	HRS	CTR PNL	1/2" – 2#12 & 1#12G	NL4B-17	
GWH-4	GAS WATER HEATER	APPLIANCE LAB			1			120	1	HRS	CTR PNL	1/2" – 2#12 & 1#12G	NL4B-17	
GWH-5	GAS WATER HEATER	APPLIANCE LAB			1			120	1	HRS	CTR PNL	1/2" – 2#12 & 1#12G	NL4B-17	
GWH-6	GAS WATER HEATER	APPLIANCE LAB			1			120	1	HRS	CTR PNL	1/2" – 2#12 & 1#12G	NL4B-17	
GWH-7	GAS WATER HEATER	APPLIANCE LAB			1			120	1	HRS	CTR PNL	1/2" – 2#12 & 1#12G	NL4B-17	
GWH-8	GAS WATER HEATER	APPLIANCE LAB			1			120	1	HRS	CTR PNL	1/2" – 2#12 & 1#12G	NL4B-17	
GWH-9	GAS WATER HEATER	APPLIANCE LAB			1			120	1	HRS	CTR PNL	1/2" – 2#12 & 1#12G	NL4B-17	
GWH-10	GAS WATER HEATER	APPLIANCE LAB			1			120	1	HRS	CTR PNL	1/2" – 2#12 & 1#12G	NL4B-17	
GWH-11	GAS WATER HEATER	APPLIANCE LAB			1			120	1	HRS	CTR PNL	1/2" – 2#12 & 1#12G	NL4B-17	
GWH-12	GAS WATER HEATER	APPLIANCE LAB			1			120	1	HRS	CTR PNL	1/2" – 2#12 & 1#12G	NL4B-19	
GWH-13	GAS WATER HEATER	APPLIANCE LAB			1			120	1	HRS	CTR PNL	1/2" – 2#12 & 1#12G	NL4B-19	
GWH-14	GAS WATER HEATER	APPLIANCE LAB			1			120	1	HRS	CTR PNL	1/2" – 2#12 & 1#12G	NL4B-19	
GWH-15	GAS WATER HEATER	APPLIANCE LAB			1			120	1	HRS	CTR PNL	1/2" – 2#12 & 1#12G	NL4B-19	
GWH-16	GAS WATER HEATER	APPLIANCE LAB			1			120	1	HRS	CTR PNL	1/2" – 2#12 & 1#12G	NL4B-19	
GWH-17	GAS WATER HEATER	APPLIANCE LAB			1			120	1	HRS	CTR PNL	1/2" – 2#12 & 1#12G	NL4B-19	
GWH-18	GAS WATER HEATER	APPLIANCE LAB			1			120	1	HRS	CTR PNL	1/2" – 2#12 & 1#12G	NL4B-19	
GWH-19	GAS WATER HEATER	APPLIANCE LAB			1			120	1	HRS	CTR PNL	1/2" – 2#12 & 1#12G	NL4B-19	
GWH-24	GAS WATER HEATER	APPLIANCE LAB			1			120	1	HRS	CTR PNL	1/2" – 2#12 & 1#12G	NL4B-19	
GWH-25	GAS WATER HEATER	WAREHOUSE												5
GWH-26	GAS WATER HEATER	WAREHOUSE												5
AC-1	AIR COMPRESSOR	COMPRESSOR BUILDING	200					480	3	350AF/400AS	CTR PNL	4" – 3#600 KCMIL & 1#2 G	NH3-1,3,5	4
AC-2	AIR COMPRESSOR	OTC MECH ROOM	15					208	3	60AF/60AS	CTR PNL	1 1/2" – 3#4 & 1#10G	NL4B-2,4,6	
CAD-1	COMPRESSED AIR DRYER	COMPRESSOR BUILDING		6				480	3	20AF/30AS	CTR PNL	3/4" – 3#12 & 1#12G	NH3-7,9,11	
DF-1	WATER COOLER	BREAK ROOM			4.8			120	1	HRS	CTR PNL	1/2" – 2#12 & 1#12G	NL4B-21	2
IH-1	INSTA-HOT	BREAK ROOM		0.75				120	1	HRS	CTR PNL	1/2" – 2#12 & 1#12G	NL4B-23	2
HWC-1	RECIRC PUMP	MECH ROOM		0.11				120	1	HRS	CTR PNL	1/2" – 2#12 & 1#12G	NL4B-25	
EWH-1	ELECTRIC WATER HEATER	OTC MECH ROOM		12.3				277	1	60AF/60AS	CTR PNL	3/4" – 3#4 & 1#10G	NH1-38	
WPB-1	DOMESTIC WATER BOOSTER PUMP	WATER SERVICE ENTRY ROOM	2					277	1	20AF/30AS	CTR PNL	3/4" – 2#12 & 1#12G	NH1-40	

SCHEDULE NOTES

1. CONNECT TO LIGHT SWITCH.
2. PROVIDE RECEPTACLE CONNECTION.
3. EQUIPMENT IS PART OF A 2 MODULE UNIT REQUIRING (1) CONNECTION PER MODULE, DENOTED WITH 'A' AND 'B' SUFFIXES.
4. PROVIDE COPPER FEEDER FROM DISCONNECT SWITCH TO UNIT AS SHOWN ON SCHEDULE.
5. SPARE WATER HEATERS THAT ARE NOT CONNECTED.

GENERAL NOTES

A. INFORMATION PRESENTED IN THIS SCHEDULE IS BASED ON EQUIPMENT SELECTED BY THE MECHANICAL ENGINEER DURING THE DESIGN PROCESS (PRE-BID). THE ACTUAL EQUIPMENT SELECTED BY MECHANICAL CONTRACTOR UNDER THIS CONTRACT MAY BE DIFFERENT. COORDINATE WITH MECHANICAL EQUIPMENT SUBMITTALS FOR ACTUAL LOADS AND PROVIDE OVERCURRENT PROTECTIVE DEVICES AND CIRCUIT SIZES AS REQUIRED BY THE EQUIPMENT MANUFACTURER PRIOR TO ORDERING MATERIALS OR ROUGH-IN.

B. ALL DISCONNECTS ARE FUSED, U.O.N. CONFIRM FUSE SIZE WITH EQUIPMENT MANUFACTURER.

C. LOCATE ALL DISCONNECTING MEANS PER 2020 NEC 430.102(B) AND AHJ REQUIREMENTS.

D. ABBREVIATIONS:
AS: AMPERE SWITCH
HRS: HORSEPOWER RATED MOTOR DISCONNECT WITH OVERLOAD PROTECTION.

E. VFD PROVIDED BY MECHANICAL CONTRACTOR AND INSTALLED BY ELECTRICAL CONTRACTOR.

COFFMAN ENGINEERS
1101 2nd Avenue,
Suite 400
Seattle, WA 98101
ph 206.623.0717
www.coffman.com

CHRISTOPHER J. BAKER
STATE OF WASHINGTON
31344
REGISTERED
PROFESSIONAL ENGINEER
1/25/2024

City of Puyallup
Development & Permitting Services
ISSUED PERMIT
Building | Planning | Engineering | Public Works | Fire | Traffic

100% CD SET

REV	ISSUED FOR	DATE

SCALE: NONE

PSE - OPERATIONAL TRAINING CENTER

MECHANICAL EQUIPMENT CONNECTION SCHEDULE

PROJECT NO:	221158
DRAWN BY:	RMF
CHECKED BY:	CJB
DATE ISSUED:	01/26/24

E0.04

© 2022

LIGHTING COMPLIANCE SUMMARY

2018 WSEC Compliance Forms for Commercial Buildings including Group R2, R3 & R4 over 3 stories and all R1

Administered by: ©2023 NEEA, All rights reserved

Project & Applicant Information	**Project Title**	PSE Operational Training Center - 2018 WSEC	For Building Department Use: **Date: Nov 01, 2023**
	Project Address	325 Todd Road NW Puyallup, WA 98371	
	Applicant Name	Matt Reeves	
	Applicant Phone	360-734-4744	
	Applicant Email	matt@zervasgroup.com	

For questions about this report, contact WSEC Commercial Technical Support at 360-539-5300 or via email at com.techsupport@waenergycodes.com

General Occupancy	All Commercial		**General Building Use Type**		Education, Vocational	**Building Cond. Floor Area**	33,837
General Project Types	New Building	**New Building or Addition Lighting Scope**	Interior Lighting Exterior Lighting	**Alteration Lighting Scope**		**Project Cond. Floor Area** **Floors Above Grade**	33,837 1
Lighting Project Description	NEW LED FIXTURES					**Compliance Method**	Compliance Method 1 - General

Lighting Compliance Scope and Method	**Project Type**	**Interior / Exterior** (interior includes both interior & parking)	**Luminaire Replacement Scope**	**Compliance Method**	**LPA Calculation Adjustment**	**Compliance Verification**
	New Building	Interior Lighting		Building area	No Calculation Adjustments selected	**COMPLIES**
	New Building	Exterior Lighting			Not applicable to exterior	**COMPLIES**

Project Title	**PSE Operational Training Center - 2018 WSEC**	**Date**	**Nov 01, 2023**
Lighting Power Calculation	**NEW BUILDING - INTERIOR LIGHTING**	**Compliance Verification**	**COMPLIES**
Compliance Method	**Building area**	**LPA Calculation Adjustment**	**none**

Interior Lighting Power Allowance - Building Area

Building Areas	**Gross Interior Area (SF)**	**LPA (Watts/SF)**	**Total Watts Allowed (SF x LPA x 1)**	**Total Proposed Watts By Building Area**	**Compliance Status by Building Area**
School/university	33,837	0.70	23,686	18,951	COMPLIES

Proposed Lighting Power Density

Fixture Type/Application	**Fixture ID**	**Building Area**	**New or Existing-to-Remain**	**Quantity of Fixtures, CLDs or Luminaires (#F)**	**Watts per Fixture, CLD or Luminaire (WpF)**	**Total Linear Feet (LF)**	**Watts per Linear Foot (WpLF)**	**Total Watts Proposed (#F x WpF) or (LF x WpLF)**
Individual Fixtures								
Other fixture type	DL1	School/university	New	24	21			504
Other fixture type	TF1	School/university	New	42	44			1,848
Other fixture type	RL1	School/university	New	63	8			500
Other fixture type	PL1	School/university	New	48	32			1,536
Other fixture type	PL2	School/university	New	233	23			5,359
Other fixture type	PL3	School/university	New	52	177			9,204

Project Title	**PSE Operational Training Center - 2018 WSEC**	**Date**	**Nov 01, 2023**
Proposed Fixtures Details	**NEW BUILDING - INTERIOR LIGHTING**		

Fixture Type/Application	**Fixture ID**	**Location in Documents**	**Lamp Type**	**Building Area**	**New or Existing-to-Remain**
Individual Fixtures					
Other fixture type	DL1	E2.01-E2.02	LED	School/university	New

	Fixture Description: RECESSED 6" LED DOWNLIGHT			Are these fixtures located within a daylight zone?: No
	Do these fixtures require specific application lighting controls?: None required			
Other fixture type	TF1	E2.01-E2.02	LED	School/university New
	Fixture Description: RECESSED LED 1X4 LED LINEAR DIF-FORMED			Are these fixtures located within a daylight zone?: Yes, controls provided
	Daylight zone location(s): Sidelit daylight zones (primary and/or secondary)			Dimming method: Continuous dimming
	Do these fixtures require specific application lighting controls?: None required			
Other fixture type	RL1	E2.01-E2.02	LED	School/university New
	Fixture Description: CONTINOUS RECESSED LED LINEAR LUMINAIRE (FT)			Are these fixtures located within a daylight zone?: No
	Do these fixtures require specific application lighting controls?: None required			
Other fixture type	PL1	E2.01-E2.02	LED	School/university New
	Fixture Description: PENDANT LED CONTINUOUS RUN LINEAR DIRECT/INDIRECT LUMINAIRE			Are these fixtures located within a daylight zone?: Yes, controls provided
	Daylight zone location(s): Sidelit daylight zones (primary and/or secondary)			Dimming method: Continuous dimming
	Do these fixtures require specific application lighting controls?: None required			
Other fixture type	PL2	E2.01-E2.02	LED	School/university New
	Fixture Description: PENDANT LINEAR LED STRIPLIGHT 22 GAUGE DIE			Are these fixtures located within a daylight zone?: No
	Do these fixtures require specific application lighting controls?: None required			
Other fixture type	PL3	E2.01-E2.02	LED	School/university New
	Fixture Description: PENDANT LED HIGH BAY EXTRUDED ALUMINUM HOUSING			Are these fixtures located within a daylight zone?: No
	Do these fixtures require specific application lighting controls?: None required			

Project Title	**PSE Operational Training Center - 2018 WSEC**	**Date**	**Nov 01, 2023**
Lighting Power Calculation	**NEW BUILDING - EXTERIOR LIGHTING**	**Compliance Verification**	**COMPLIES**
Exterior Lighting Zone	**ZONE 2**	**Base Site Allowance**	**400**

Exterior Tradable Lighting Power Allowance

Tradable Surface	**Tradable Surface Sub-Type**	**Surface Area (SF)**	**LPA (Watts/SF)**	**Linear Feet (LF)**	**LPA (Watts/LF)**	**Total Watts Allowed (LPA x SF) or (LPA x LF)**	**Total Tradable Proposed Watts**	**Tradable Compliance Status**
Building grounds	Landscaping	68,033	0.04			2,721		
Building grounds	Walkways 10 feet and wider	10,950	0.10			1,095		
Building grounds	Special features	15,000	0.10			1,500		
					Base Site Allowance	400		
					Totals	5,716	3,725	COMPLIES

Proposed Tradable Lighting Power Density

Fixture Type	**Fixture ID**	**Tradable Surface Type**	**Quantity of Fixtures (#F)**	**Watts or Wattage Limit per Fixture (WpF)**	**Total Linear Feet (LF)**	**Watts per Linear Foot (WpLF)**	**Total Watts Proposed (#F x WpF) or (LF x WpLF)**
Individual Fixtures							
Pole top-mounted	LP2	Building grounds - Landscaping	2	150			300
Pole top-mounted	LP1	Building grounds - Landscaping	8	75			600
Wall-mounted	WL2	Building grounds - Walkways 10 feet and wider	17	55			935
Other fixture type	PL4	Building grounds - Special features	63	30			1,890
						Tradable Proposed Total	**3,725**

Lighting, Motor and Electrical Requirements List, pg 1 of 10

2018 WSEC Requirements for Commercial Buildings including Group R2, R3 & R4 over 3 stories & all R1 -- Administered by ©2023 NEEA, All rights reserved

The following information is necessary to check a permit application for compliance with the lighting systems, motors and electrical system requirements in the Washington State Energy Code, Commercial Provisions.

For questions about this report, contact WSEC Commercial Technical Support at 360-539-5300 or via email at com.techsupport@waenergycodes.com

Project:
PSE Operational Training Center - 2018 WSEC
325 Todd Road NW
Puyallup, WA 98371

Date: 2023-11-01

Applies	Code Section	Component	Compliance Information Required In Permit Documentation	Location in Documents	Building Department Notes
LIGHTING SCOPE					
NA	C103.1	Construction documents - General	For a shell & core or tenant space (first build-out) project, indicate if there is no lighting scope included in the project.		
NA	C103.1	Construction documents - General	For an alteration project, indicate if there is no lighting scope included in the project.		
LIGHTING CONTROLS					
YES	C405.2	Lighting controls, general	For all lighting fixtures, indicate lighting control method on plans for spaces and lighting zone(s) served, or exception taken	E2.01-E2.02	
NA	C405.2, Option 2	Luminaire level lighting controls (LLLC)	Indicate on plans all fixtures provided with LLLC in lieu of C405.2 lighting controls; provide description of control capabilities and performance parameters		
NA	C405.2.5, Item 3 C405.2.1.1 C405.2.3.1	Lighting in dwelling units (dormitory, hotel and all other than multifamily)	Indicate method of automatic control of all installed luminaires in dwelling units in buildings other than multifamily (occupancy or light reduction controls)		
NA	C405.2.5, Item 2	Lighting in sleeping units	Indicate method of automatic off control of all installed luminaires in sleeping units (vacancy or key card control); also refer to Receptacles		
YES	C405.2.3 C405.2.3.1 C405.2.5	Manual controls	Indicate on plans the method of manual lighting control, location of manual control device and the area or specific application it serves	E2.01-E2.02	
YES	C405.2.3.1 C405.2.1.1 C405.2.4	Manual interior light reduction controls	Indicate on plans which method of manual 50% lighting load reduction is provided, or indicate applicable exception	E2.01-E2.02	
YES	C405.2.1 C405.2.2.1 C405.2.1, Exception 3	Method of automatic shut-off control	Indicate on plans the method of automatic shut-off control during unoccupied periods (occupancy sensor, time switch or digital timer switch) for all lighting zones	E2.01-E2.02	
YES	C405.2.1	Occupant sensor controls	Indicate on plans all luminaires that are controlled by occupant sensor controls; indicate controls are configured to turn luminaires 100% off when the space is unoccupied	E2.01-E2.02	
YES	C405.2.1 C405.2.1.1	Occupant sensor controls	Indicate if occupant sensor controls are configured to be manual on or automatic on to not more than 50% power; indicate spaces eligible for exception that allows automatic on to 100% power	E2.01-E2.02	

Lighting, Motor and Electrical Requirements List, pg 2 of 10

2018 WSEC Requirements for Commercial Buildings including Group R2, R3 & R4 over 3 stories & all R1 -- Administered by ©2023 NEEA, All rights reserved

The following information is necessary to check a permit application for compliance with the lighting systems, motors and electrical system requirements in the Washington State Energy Code, Commercial Provisions.

For questions about this report, contact WSEC Commercial Technical Support at 360-539-5300 or via email at com.techsupport@waenergycodes.com

NA	C405.2.1.2	Occupant sensor controls - warehouses spaces	Indicate each aisleway and corridor within a warehouse space are designated as separate zones that are independently controlled		
NA			Indicate occupant sensors are configured to automatically reduce lighting power by 50% when the zone is unoccupied and 100% off after the zone is unoccupied for over 20 minutes; indicate controls are configured to automatically restore lighting to full power when the zone or space is occupied		
YES	C405.2.1.3	Occupant sensor controls - open plan office areas	For open plan office areas larger than 300 sf, indicate general lighting is provided with vacancy controls that reduce lighting power by not less than 80% and are configured to turn luminaires 100% off when the space is unoccupied; indicate that no individual control zone area exceeds 600 sf	E2.01-E2.02	
NA	C405.2.1.4	Occupant sensor controls - parking garages	Indicate parking garage general lighting is provided with vacancy controls that reduce lighting power by not less than 30% and are configured to turn luminaires 100% off when no vehicles or pedestrians are present, unless eligible for an exception; indicate that no individual control zone area exceeds 3,600 sf		
NA	C405.2.1.5	Occupant sensor controls - enclosed fire-rated stairwells	Indicate stairway lighting is provided with vacancy controls that reduce lighting power by not less than 50% when the stairway in unoccupied		
NA	C405.2.2.1	Automatic time switch controls	Indicate spaces on plans where time switch controls turn luminaires 100% off during unoccupied hours		
NA			Indicate spaces on plans where time switch controls are configured to turn on lighting to full power versus 50% power		
NA			Indicate locations of override switches on plans and the lighting zone(s) served; indicate that the area(s) served by each override switch does not exceeds 5,000 sf		
NA	C405.2.1, Exception 3	Digital timer switch	Indicate digital timer switch control includes: manual on/off, time delay, audible and visual indication of impending time-out		
YES	C405.2.4.2 C405.2.4.3	Daylight zones - Sidelit and toplit	Indicate primary and secondary sidelit daylight zone floor areas on plans	E2.01-E2.02	
YES			Indicate toplit daylight zone floor areas on plans	E2.01-E2.02	
YES			For small vertical fenestration assemblies (rough opening less than 10 percent of primary daylight zone floor area) where daylight responsive controls are not required, provide fenestration area to daylight zone floor area calculation(s)	E2.01-E2.02	

Lighting, Motor and Electrical Requirements List, pg 3 of 10

2018 WSEC Requirements for Commercial Buildings including Group R2, R3 & R4 over 3 stories & all R1 -- Administered by ©2023 NEEA, All rights reserved

The following information is necessary to check a permit application for compliance with the lighting systems, motors and electrical system requirements in the Washington State Energy Code, Commercial Provisions.

For questions about this report, contact WSEC Commercial Technical Support at 360-539-5300 or via email at com.techsupport@waenergycodes.com

YES	C405.2.4	Daylight responsive controls	Indicate on plans lighting zone(s) served by daylight responsive controls; indicate that the area served by each control device does not exceeds 2,500 sf	E2.01-E2.02	
YES			Identify sidelit and toplit daylight zones that are not provided with daylight sensing controls and the exception(s) that apply	E2.01-E2.02	
YES	C405.2.4.1.1	Daylight responsive controls	Indicate on plans the lighting load reduction method (continuous dimming, or stepped dimming that provides at least two even steps between 0%-100% of rated power)	E2.01-E2.02	
YES	C405.2.4.1	Daylight responsive controls	Indicate that daylight sensing controls are configured to completely shut off all controlled lights in the lighting zone	E2.01-E2.02	
NA	C405.2.5	Additional controls - Specific application lighting controls	Identify spaces and lighting fixtures on plans that require specific application lighting controls per this section		
NA	C405.2.5, Item 1	Display and accent lighting	Indicate on plans that manual controls are provided that control display, accent lighting and display case lighting independently from both general area lighting and other lighting applications within the same space		
NA			Indicate manual and automatic (occupant sensor or time switch) lighting control methods		
NA	C405.2.5, Item 3	Hotel/motel guest rooms	Indicate method of automatic control - vacancy or captive key control of all installed luminaires and switched receptacles in guest room		
NA	C405.2.5, Item 1	Supplemental task lighting	Indicate method and location of manual and automatic shut-off control (occupant sensor or time switch) for supplemental task lighting, including under-shelf or under-cabinet lighting		
NA	C405.2.5, Item 1	Lighting equipment for sale or demonstration	Indicate on plans that lighting equipment for sale or demonstration are controlled independently from both general area lighting and other lighting applications within the same space		
NA			Indicate manual and automatic (occupant sensor or time switch) lighting control methods		
NA	C405.2.5, Item 4	Lighting for non-visual applications	Identify all eligible non-visual lighting applications on plans; indicate that the area served by each control device does not exceeds 4,000 sf		
NA			Indicate on plans that non-visual lighting are controlled independently from both general area lighting and other lighting applications within the same space		

Lighting, Motor and Electrical Requirements List, pg 4 of 10

2018 WSEC Requirements for Commercial Buildings including Group R2, R3 & R4 over 3 stories & all R1 -- Administered by ©2023 NEEA, All rights reserved

The following information is necessary to check a permit application for compliance with the lighting systems, motors and electrical system requirements in the Washington State Energy Code, Commercial Provisions.

For questions about this report, contact WSEC Commercial Technical Support at 360-539-5300 or via email at com.techsupport@waenergycodes.com

NA			Indicate method of manual lighting control and applicable automatic lighting control		
YES	C405.2.5, Item 5	Means of egress lighting	Identify on plans egress fixtures that function as both normal and emergency means of egress illumination	E2.01-E2.02	
YES			Provide calculation of lighting power density of total egress lighting	E2.01-E2.02	
YES			If total egress lighting power density is greater than 0.02 W/sq. ft., indicate on plans egress fixtures requiring automatic shut-off during unoccupied periods	E2.01-E2.02	
YES			Indicate method of automatic shut-off control	E2.01-E2.02	
NA	C405.4.1 C405.4.2	Lighting control of exempt interior lighting	Indicate that exempt interior lighting equipment and lighting located within spaces that are eligible for a lighting power exemption are controlled independently from non-exempt and general area lighting		
YES	C405.2.6	Exterior lighting controls	For decorative exterior lighting, indicate on plans automatic daylight shut-off controls, or exception taken	E2.01-E2.02	
YES			For exterior lighting that is not decorative, indicate on plans automatic daylight or time-switch shut-off controls and setback controls; or indicate exception taken	E2.01-E2.02	
YES			For lighting requiring setback controls, include control sequence that reduces lighting power by at least 30% between 12am-6am, or from 1 hour after closing to 1 hour before opening, or based upon motion sensor	E2.01-E2.02	
YES			For building facade and landscape lighting, indicate control sequence for shut-off control is based on dawn-to-dusk and business opening/closing schedule; indicate whether automatic or time switch controls will be provided for this function	E2.01-E2.02	
NA	C405.5.2	Lighting control of exempt exterior lighting	Indicate that exempt exterior lighting and lighting located within exterior areas/surfaces that eligible for a lighting power exemption are controlled independently from non-exempt exterior lighting		
NA	C405.5.4	Exterior gas-fired lighting appliances	Indicate ignition system is a method other then continuously burning pilot light		
NA	C405.2.7	Area controls - Master control switches and circuit power limit	Indicate location(s) of master control switch(es) intended to control multiple independent switches; circuit breaker may not be used as a master control switch		
NA			Verify that no 20 amp circuit controlled by a single switch or automatic control is loaded beyond 80%		
ADDITIONAL EFFICIENCY CREDIT - ENHANCED INTERIOR LIGHTING CONTROLS					

PRCNC20240216

ZERVAS
ARCHITECTURE | INTERIOR DESIGN
zervasgroup.com
209 Prospect Street
Bellingham, WA 98225
360.734.4744

COFFMAN ENGINEERS
1101 2nd Avenue,
Suite 400
Seattle, WA 98101
ph 206.623.0717
www.coffman.com

CHRISTOPHER J. BAKER — STATE OF WASHINGTON — 31344 — REGISTERED PROFESSIONAL ENGINEER
1/25/2024

City of Puyallup
Development & Permitting Services
ISSUED PERMIT
Building | Planning | Engineering | Public Works | Fire | Traffic

100% CD SET

REV	ISSUED FOR	DATE

SCALE: NONE

PSE - OPERATIONAL TRAINING CENTER

NREC

PROJECT No:	221158
DRAWN BY:	RMF
CHECKED BY:	CJB
DATE ISSUED:	01/26/24

E0.05

© 2022

Lighting, Motor and Electrical Requirements List, pg 5 of 10

2018 WSEC Requirements for Commercial Buildings including Group R2, R3 & R4 over 3 stories & all R1 -- Administered by ©2023 NEEA. All rights reserved
The following information is necessary to check a permit application for compliance with the lighting systems, motors and electrical system requirements in the Washington State Energy Code, Commercial Provisions.
For questions about this report, contact WSEC Commercial Technical Support at 360-539-5300 or via email at com.techsupport@waenergycodes.com

NA	C406.4	Enhanced digital lighting controls	To comply with additional efficiency credit, indicate on plans that interior lighting fixtures are configured with all of the following control functions, as applicable: 1) Each fixture is individually addressed, or exception taken; 2) Fixtures are configured for continuous dimming; 3) No more than eight fixtures are controlled by a single daylight sensor; 4) In enclosed and open office areas, illumination levels of overhead general area lighting is configured to be individually adjusted by occupants		
NA			Include calculations that demonstrate the total lighting power of all interior lighting fixtures configured with enhanced lighting controls is no less than 90% of the total interior lighting power for the area the enhanced lighting controls credit is being applied to		
INTERIOR LIGHTING POWER & EFFICACY					
YES	C405.4.1 C405.4.2	Total connected interior lighting power	Include all luminaires in interior lighting fixture schedule; indicate fixture types, lamps, ballasts, and manufacturer's watts per fixture for the installed lamp	E0.03	
YES			Identify spaces eligible for lighting power exemption on plans and in WSEC interior lighting compliance reports; indicate the exception applied	E0.05-E0.06	
YES			Identify lighting equipment eligible for lighting power exemption in fixture schedule and in WSEC interior lighting compliance reports; indicate the exception applied	E0.05-E0.06	
NA	C405.1 C405.1.1	Lighting in dwelling units (multifamily)	For all installed luminaires, include lamp type and number of lamps in lighting fixture schedule; for lamps that are not LED, T-8 or small diameter fluorescent, indicate efficacy of other lamp types is 65 lumens per watt or greater		
NA			For all installed luminaires, indicate in lighting fixture schedule whether complying via lighting power density or by qualifying lamp type; if by lamp type, include number of lamps		
NA			For all installed luminaires, indicate in lighting fixture schedule whether complying via lighting power density or by qualifying lamp type; if by lamp type, include number of lamps		
INTERIOR LIGHTING POWER CALCULATION - INDICATE COMPLIANCE PATH TAKEN					
YES	C405.4.2.1	Building Area Method	Demonstrate that total proposed wattage per building area does not exceed maximum allowed wattage per building area; identify locations of building areas on plans; provide WSEC exterior lighting compliance reports	E0.05-E0.06	

Lighting, Motor and Electrical Requirements List, pg 6 of 10

2018 WSEC Requirements for Commercial Buildings including Group R2, R3 & R4 over 3 stories & all R1 -- Administered by ©2023 NEEA. All rights reserved
The following information is necessary to check a permit application for compliance with the lighting systems, motors and electrical system requirements in the Washington State Energy Code, Commercial Provisions.
For questions about this report, contact WSEC Commercial Technical Support at 360-539-5300 or via email at com.techsupport@waenergycodes.com

NA	C405.4.2.2	Space-By-Space Method	Demonstrate that total proposed wattage does not exceed maximum allowed wattage; identify locations of space types on plans, including retail display areas and areas with display, highlight and decorative lighting; provide WSEC exterior lighting compliance reports		
ADDITIONAL EFFICIENCY CREDITS - REDUCED INTERIOR LIGHTING POWER DENSITY					
YES	C406.3.1 C406.3.2	Reduced interior lighting power density	To comply with additional efficiency credit, demonstrate that total connected interior lighting wattage is 10% or 20% less than the total maximum allowed lighting wattage for the area the reduced lighting power credit is being applied to; indicate whether lighting power allowance is based on the building area method or space-by-space method; provide WSEC exterior lighting compliance reports	10%	
NA	C406.3	Reduced interior lighting power density - dwelling unit lamp efficacy	For project with dwelling units, to comply with additional efficiency credit indicate in lighting fixture schedule that lamps within installed interior luminaires have an efficacy rating of at least 65 lumens per watt; include number of lamps and provide calculations that demonstrate at least 95% of lamps have this efficacy rating		
EXTERIOR LIGHTING POWER & EFFICACY					
YES	C405.5.2	Total connected exterior lighting power	Include all luminaires in exterior lighting fixture schedule; indicate fixture types, lamps, ballasts, and manufacturer's watts per fixture for the installed lamp	E0.03	
YES			Identify exterior applications eligible for lighting power exemption on plans and in WSEC exterior lighting compliance reports; indicate exception applied	E0.05-E0.06	
YES	C405.5.3(1)	Exterior lighting zone	Indicate building exterior lighting zone as specified by the AHJ	2	
NA	C405.5.1	Exterior building grounds lighting	For building grounds fixtures rated at greater than 50 watts, indicate rated lamp efficacy (in lumens per watt) in fixture schedule		
EXTERIOR LIGHTING POWER CALCULATION					
YES	C405.5.3	Tradable allowances	Demonstrate that total proposed tradable surface wattage does not exceed maximum allowed tradable surface wattage (including base site allowance); identify locations of tradable surfaces on plans; provide WSEC exterior lighting compliance reports	E0.05-E0.06	

Lighting, Motor and Electrical Requirements List, pg 7 of 10

2018 WSEC Requirements for Commercial Buildings including Group R2, R3 & R4 over 3 stories & all R1 -- Administered by ©2023 NEEA. All rights reserved
The following information is necessary to check a permit application for compliance with the lighting systems, motors and electrical system requirements in the Washington State Energy Code, Commercial Provisions.
For questions about this report, contact WSEC Commercial Technical Support at 360-539-5300 or via email at com.techsupport@waenergycodes.com

NA			Demonstrate that proposed wattage per non-tradable surface type does not exceed maximum allowed wattage per non-tradable surface type (including base site allowance remaining after tradable allowance calculation); identify locations of non-tradable surfaces on plans; provide WSEC exterior lighting compliance reports		
LIGHTING ALTERATIONS					
NA	C503.6.1	Interior and parking garage lighting fixture alterations	Where ≥ 50% of existing luminaires in an interior space or parking garage are replaced; indicate compliance path (building area or space-by-space method); include all new and existing-to-remain luminaires in WSEC interior lighting compliance reports; indicate proposed lighting wattage does not exceed maximum allowed per compliance path		
NA			Where < 50% of existing luminaires in an interior space or parking garage are replaced; indicate total existing lighting wattage in each space prior to alteration; include all new and existing-to-remain luminaires in WSEC interior lighting compliance reports; indicate proposed total lighting wattage in alteration area does not exceed total existing lighting wattage prior to alteration		
NA			Where ≥ 50% of existing exterior lighting wattage is replaced; include all new and existing-to-remain luminaires in WSEC exterior lighting compliance reports; indicate proposed total exterior lighting wattage does not exceed maximum allowed		
NA			Where < 50% of existing exterior lighting wattage is replaced; indicate total existing lighting wattage prior to alteration; include all new and existing-to-remain luminaires in WSEC interior exterior compliance reports; indicate proposed total exterior lighting wattage does not exceed total existing wattage prior to alteration		
NA	C503.6.2	Interior lighting wiring and circuiting alterations	Where new wiring is installed to serve new interior luminaires and /or luminaires are relocated to a new circuit; indicate manual and automatic lighting controls are provided (as applicable) - manual (C405.2.3); occupancy sensor (C405.2.1); light reduction (C405.2.3); daylight responsive (C405.2.4); specific application (C405.2.5)		
NA			Where new wiring is installed to serve new exterior luminaires and /or luminaires are relocated to a new circuit; indicate automatic lighting controls are provided (C405.2.6)		

Lighting, Motor and Electrical Requirements List, pg 8 of 10

2018 WSEC Requirements for Commercial Buildings including Group R2, R3 & R4 over 3 stories & all R1 -- Administered by ©2023 NEEA. All rights reserved
The following information is necessary to check a permit application for compliance with the lighting systems, motors and electrical system requirements in the Washington State Energy Code, Commercial Provisions.
For questions about this report, contact WSEC Commercial Technical Support at 360-539-5300 or via email at com.techsupport@waenergycodes.com

NA	C503.6.3	Lighting panel alterations	Where a new interior and/or exterior lighting panel is installed or an existing panel is moved (all new raceway and conductor wiring), indicate all applicable lighting controls requirements apply		
NA	C503.6.4	Newly-created rooms	Where interior space(s) is reconfigured (permanently installed walls or ceiling-height partitions) to create new enclosed spaces, indicate all applicable lighting controls requirements apply		
NA	C504.2	Lighting repairs	Identify existing luminaires being upgraded with bulb and / or ballast replacement; indicate fixture alteration does not increase existing fixture wattage		
NA	C505.1	Change of interior space use	Identify spaces on plans where the building area type or space use type is being changed from one type to another per Tables C405.4.2(1) or (2)		
NA			Indicate compliance method (building area or space-by-space); include all new and existing-to-remain luminaires in WSEC interior lighting compliance reports; indicate proposed lighting wattage does not exceed maximum allowed per compliance path		
RECEPTACLES					
YES	C405.10	Controlled receptacles	Identify all controlled and uncontrolled receptacles on electrical plans in each space in which they are required; include receptacle configuration such as spacing between controlled and uncontrolled, duplex devices, etc	E3.01-E3.02	
YES			Provide schedule that lists the number of controlled and uncontrolled receptacles in each space where controlled receptacles are required - classrooms, private offices, open office areas, conference rooms, copy rooms, break rooms and modular partitions/workstations	E3.01-E3.02	
YES			Indicate on plans the method of automatic control for each controlled receptacle zone (occupant sensor or programmable time-of-day control); indicate that each zone served by a single controller does not exceed 5,000 sf	E3.01-E3.02	
NA	C405.2.5, Item 2	Switched receptacles in sleeping units	Indicate method of automatic off control of all switched receptacles in sleeping units (vacancy or key card control)		
NA	C503.6.6	Electrical receptacle alterations	Where new receptacles are added or replaced within an alteration project that is 5,000 sf or larger, indicate receptacles are provided with automatic controls per C405.10, or exception taken		
MOTORS, TRANSFORMERS, ELECTRIC METERS, INTERIOR TRANSPORTATION					

Lighting, Motor and Electrical Requirements List, pg 9 of 10

2018 WSEC Requirements for Commercial Buildings including Group R2, R3 & R4 over 3 stories & all R1 -- Administered by ©2023 NEEA. All rights reserved
The following information is necessary to check a permit application for compliance with the lighting systems, motors and electrical system requirements in the Washington State Energy Code, Commercial Provisions.
For questions about this report, contact WSEC Commercial Technical Support at 360-539-5300 or via email at com.techsupport@waenergycodes.com

NA	C405.6	Electrical transformers	Include electrical transformer schedule on electrical plans; indicate transformer type, size, efficiency, or exception taken		
YES	C405.11	Feeders and branch circuits	Provide documentation that demonstrates maximum voltage drop across feeders and branch circuits does not exceed 5%	E5.01	
NA	C405.7	Dwelling unit electrical energy consumption	Indicate on electrical plans that each dwelling unit in Group R-2 has a separate electrical energy meter		
NA	C405.8	Electric motor efficiency	Include all motors, including fractional hp motors, in electric motor schedule on electrical plans; indicate motor type, horsepower, rpm, rated efficiency, or exception applied		
NA	C405.9.1	Elevator cabs	For luminaires in each elevator cab, provide calculations that demonstrate average efficacy is not less than 35 lumens per watt		
NA			For elevators that do not have an integral air conditioning system, indicate rated watts per cfm for elevator cab ventilation fans do not exceed 0.33 watts per cfm		
NA			Indicate automatic controls that de-energize lighting and ventilation fans when elevator is stopped and unoccupied for a period of 15 minutes or more		
NA	C405.9.2	Escalators and moving walks	Indicate escalators comply with ASME A17.1/CSA B44; automatic controls are configured to reduce operational speed to the minimum permitted when not in use		
NA	C405.9.3	Regenerative drive	Indicate all one-way down or reversible escalators are provided with a variable frequency regenerative drive		
DOCUMENTATION AND SYSTEM REQUIREMENTS TO SUPPORT COMMISSIONING (CX)					
YES	C408.4	Scope of electrical power and lighting systems commissioning	Indicate that all electrical systems (receptacles, transformers, motors, vertical and horizontal transportation) for which the WSEC requires control functions and / or configuration to perform specific functions are required to be commissioned	E0.01	
YES			Where total building lighting load is > 20 kW, or where total lighting load of luminaires requiring daylight sensing and / or occupancy control > 10 kW, indicate that all automatic lighting control systems are required to be commissioned; or provide building lighting power calculation demonstrating eligibility for exception	E0.01	
YES	C405.13 C408.1.1 C408.1.2 C408.1.4.2 C103.6.3	Commissioning requirements in construction documents	Indicate Cx requirements in plans and specifications for all applicable electrical and lighting control systems per C408	E0.01	

Lighting, Motor and Electrical Requirements List, pg 10 of 10

2018 WSEC Requirements for Commercial Buildings including Group R2, R3 & R4 over 3 stories & all R1 -- Administered by ©2023 NEEA. All rights reserved
The following information is necessary to check a permit application for compliance with the lighting systems, motors and electrical system requirements in the Washington State Energy Code, Commercial Provisions.
For questions about this report, contact WSEC Commercial Technical Support at 360-539-5300 or via email at com.techsupport@waenergycodes.com

YES	C408.1.2 C408.1.2.1 C408.1.4 C103.6.3	Commissioning requirements in construction documents	Include general summary of Cx plan per C408.1.2 including: 1) Narrative description of activities; 2) Responsibilities of the Cx team; 3) Schedule of activities including verification of project close out documentation per C103.6; 4) Conflict of interest plan (if required)	E0.01	
YES	C408.1.2 C408.1.4 C103.6.3	Commissioning requirements in construction documents	Include in general summary that a Cx project report and Compliance Checklist (Figure C408.1.4.1) shall be completed by the Certified Cx Professional and provided to the owner prior to the final electrical inspection	E0.01	
YES	C408.4.1	Functional performance testing criteria	Identify in plans and specifications the intended operation of all equipment and controls during all modes of operation, including interfacing between new and existing-to-remain systems	E0.01	
PROJECT CLOSE OUT DOCUMENTATION					
YES	C103.6.3	Project close out documentation requirements	Indicate in plans that project close out documentation is required including WSEC lighting compliance reports that document all interior and exterior lighting area and / or surface types, lighting power allowances and installed densities	E0.01	
If "no" is selected for any question, provide explanation.					

PRCNC20240216

ZERVAS
ARCHITECTURE | INTERIOR DESIGN
zervasgroup.com
209 Prospect Street
Bellingham, WA 98225
360.734.4744

COFFMAN ENGINEERS
1101 2nd Avenue,
Suite 400
Seattle, WA 98101
ph 206.623.0717
www.coffman.com

CHRISTOPHER J. BAKKER
STATE OF WASHINGTON
31344
REGISTERED
PROFESSIONAL ENGINEER
1/25/2024

City of Puyallup
Development & Permitting Services
ISSUED PERMIT
Building | Planning | Engineering | Public Works | Fire | Traffic

100% CD SET

REV	ISSUED FOR	DATE

SCALE: NONE

PSE - OPERATIONAL TRAINING CENTER

NREC

PROJECT No:	221158
DRAWN BY:	RMF
CHECKED BY:	CJB
DATE ISSUED:	01/26/24

E0.06

© 2022

LIGHTING COMPLIANCE SUMMARY

2018 WSEC Compliance Forms for Commercial Buildings including Group R2, R3 & R4 over 3 stories and all R1 — Administered by: ©2023 NEEA, All rights reserved

Project & Applicant Information	**Project Title**	PSE Operational Training Center - Control House - 2018 WSEC	For Building Department Use:	**Date: Nov 01, 2023**
	Project Address	325 Todd Road NW Puyallup, WA 98371		
	Applicant Name	Matt Reeves		
	Applicant Phone	360.734.4744		
	Applicant Email	matt@zervasgroup.com		

For questions about this report, contact WSEC Commercial Technical Support at 360-539-5300 or via email at com.techsupport@waenergycodes.com

General Occupancy	All Commercial		**General Building Use Type**		Education, Vocational	**Building Cond. Floor Area**	332
General Project Types	New Building	**New Building or Addition Lighting Scope**	Interior Lighting Exterior Lighting	**Alteration Lighting Scope**		**Project Cond. Floor Area**	332
						Floors Above Grade	1
						Compliance Method	Compliance Method 1 - General
Lighting Project Description	NEW LED FIXTURES						

Lighting Compliance Scope and Method	**Project Type**	**Interior / Exterior** (interior includes both interior & parking)	**Luminaire Replacement Scope**	**Compliance Method**	**LPA Calculation Adjustment**	**Compliance Verification**
	New Building	Interior Lighting		Building area	No Calculation Adjustments selected	**COMPLIES**
	New Building	Exterior Lighting			Not applicable to exterior	**COMPLIES**

Project Title	**PSE Operational Training Center - Control House - 2018 WSEC**	**Date**	**Nov 01, 2023**
Lighting Power Calculation	**NEW BUILDING - INTERIOR LIGHTING**	**Compliance Verification**	**COMPLIES**
Compliance Method	**Building area**	**LPA Calculation Adjustment**	**none**

Interior Lighting Power Allowance - Building Area

Building Areas	**Gross Interior Area (SF)**	**LPA (Watts/SF)**	**Total Watts Allowed (SF x LPA x 1)**	**Total Proposed Watts By Building Area**	**Compliance Status by Building Area**
School/university	332	0.70	232	193	COMPLIES

Proposed Lighting Power Density

Fixture Type/Application	**Fixture ID**	**Building Area**	**New or Existing-to-Remain**	**Quantity of Fixtures, CLDs or Luminaires (#F)**	**Watts per Fixture, CLD or Luminaire (WpF)**	**Total Linear Feet (LF)**	**Watts per Linear Foot (WpLF)**	**Total Watts Proposed (#F x WpF) or (LF x WpLF)**
Individual Fixtures								
Other fixture type	SL1	School/university	New	6	32			193

Project Title	**PSE Operational Training Center - Control House - 2018 WSEC**	**Date**	**Nov 01, 2023**
Proposed Fixtures Details	**NEW BUILDING - INTERIOR LIGHTING**		

Fixture Type/Application	**Fixture ID**	**Location in Documents**	**Lamp Type**	**Building Area**	**New or Existing-to-Remain**
Individual Fixtures					
Other fixture type	SL1	E1.01	LED	School/university	New
	Fixture Description: LINEAR LED STRIPLIGHT			Are these fixtures located within a daylight zone?: No	
	Do these fixtures require specific application lighting controls?: None required				

Project Title	**PSE Operational Training Center - Control House - 2018 WSEC**	**Date**	**Nov 01, 2023**

Lighting Power Calculation	**NEW BUILDING - EXTERIOR LIGHTING**	**Compliance Verification**	**COMPLIES**
Exterior Lighting Zone	**ZONE 2**	**Base Site Allowance**	**400**

Exterior Tradable Lighting Power Allowance

Tradable Surface	**Tradable Surface Sub-Type**	**Surface Area (SF)**	**LPA (Watts/SF)**	**Linear Feet (LF)**	**LPA (Watts/LF)**	**Total Watts Allowed (LPA x SF) or (LPA x LF)**	**Total Tradable Proposed Watts**	**Tradable Compliance Status**
Building grounds	Walkways 10 feet and wider	100	0.10			10		
					Base Site Allowance	400		
					Totals	410	70	COMPLIES

Proposed Tradable Lighting Power Density

Fixture Type	**Fixture ID**	**Tradable Surface Type**	**Quantity of Fixtures (#F)**	**Watts or Wattage Limit per Fixture (WpF)**	**Total Linear Feet (LF)**	**Watts per Linear Foot (WpLF)**	**Total Watts Proposed (#F x WpF) or (LF x WpLF)**
Individual Fixtures							
Wall-mounted	WL1	Building grounds - Walkways 10 feet and wider	2	35			70
						Tradable Proposed Total	**70**

Lighting, Motor and Electrical Requirements List, pg 1 of 10

2018 WSEC Requirements for Commercial Buildings including Group R2, R3 & R4 over 3 stories & all R1 -- Administered by ©2023 NEEA, All rights reserved

The following information is necessary to check a permit application for compliance with the lighting systems, motors and electrical system requirements in the Washington State Energy Code, Commercial Provisions.
For questions about this report, contact WSEC Commercial Technical Support at 360-539-5300 or via email at com.techsupport@waenergycodes.com

Project:
PSE Operational Training Center - Control House - 2018 WSEC
325 Todd Road NW
Puyallup, WA 98371

Date: 2023-11-01

Applies	Code Section	Component	Compliance Information Required In Permit Documentation	Location in Documents	Building Department Notes
LIGHTING SCOPE					
NA	C103.1	Construction documents - General	For a shell & core or tenant space (first build-out) project, indicate if there is no lighting scope included in the project.		
NA	C103.1	Construction documents - General	For an alteration project, indicate if there is no lighting scope included in the project.		
LIGHTING CONTROLS					
YES	C405.2	Lighting controls, general	For all lighting fixtures, indicate lighting control method on plans for spaces and lighting zone(s) served, or exception taken	E1.01	
NA	C405.2, Option 2	Luminaire level lighting controls (LLLC)	Indicate on plans all fixtures provided with LLLC in lieu of C405.2 lighting controls; provide description of control capabilities and performance parameters		
NA	C405.2.5, Item 3 C405.2.1.1 C405.2.3.1	Lighting in dwelling units (dormitory, hotel and all other than multifamily)	Indicate method of automatic control of all installed luminaires in dwelling units in buildings other than multifamily (occupancy or light reduction controls)		
NA	C405.2.5, Item 2	Lighting in sleeping units	Indicate method of automatic off control of all installed luminaires in sleeping units (vacancy or key card control); also refer to Receptacles		
NA	C405.2.3 C405.2.3.1 C405.2.5	Manual controls	Indicate on plans the method of manual lighting control, location of manual control device and the area or specific application it serves		
NA	C405.2.3.1 C405.2.1.1 C405.2.4	Manual interior light reduction controls	Indicate on plans which method of manual 50% lighting load reduction is provided, or indicate applicable exception		
NA	C405.2.1 C405.2.2.1 C405.2.1, Exception 3	Method of automatic shut-off control	Indicate on plans the method of automatic shut-off control during unoccupied periods (occupancy sensor, time switch or digital timer switch) for all lighting zones		
NA	C405.2.1	Occupant sensor controls	Indicate on plans all luminaires that are controlled by occupant sensor controls; indicate controls are configured to turn luminaires 100% off when the space is unoccupied		
NA	C405.2.1 C405.2.1.1	Occupant sensor controls	Indicate if occupant sensor controls are configured to be manual on or automatic on to not more than 50% power; indicate spaces eligible for exception that allows automatic on to 100% power		

Lighting, Motor and Electrical Requirements List, pg 2 of 10

2018 WSEC Requirements for Commercial Buildings including Group R2, R3 & R4 over 3 stories & all R1 -- Administered by ©2023 NEEA, All rights reserved

The following information is necessary to check a permit application for compliance with the lighting systems, motors and electrical system requirements in the Washington State Energy Code, Commercial Provisions.
For questions about this report, contact WSEC Commercial Technical Support at 360-539-5300 or via email at com.techsupport@waenergycodes.com

NA	C405.2.1.2	Occupant sensor controls - warehouses spaces	Indicate each aisleway and corridor within a warehouse space are designated as separate zones that are independently controlled		
NA			Indicate occupant sensors are configured to automatically reduce lighting power by 50% when the zone is unoccupied and 100% off after the zone is unoccupied for over 20 minutes; indicate controls are configured to automatically restore lighting to full power when the zone or space is occupied		
NA	C405.2.1.3	Occupant sensor controls - open plan office areas	For open plan office areas larger than 300 sf, indicate general lighting is provided with vacancy controls that reduce lighting power by not less than 80% and are configured to turn luminaires 100% off when the space is unoccupied; indicate that no individual control zone area exceeds 600 sf		
NA	C405.2.1.4	Occupant sensor controls - parking garages	Indicate parking garage general lighting is provided with vacancy controls that reduce lighting power by not less than 30% and are configured to turn luminaires 100% off when no vehicles or pedestrians are present, unless eligible for an exception; indicate that no individual control zone area exceeds 3,600 sf		
NA	C405.2.1.5	Occupant sensor controls - enclosed fire-rated stairwells	Indicate stairway lighting is provided with vacancy controls that reduce lighting power by not less than 50% when the stairway in unoccupied		
NA	C405.2.2.1	Automatic time switch controls	Indicate spaces on plans where time switch controls turn luminaires 100% off during unoccupied hours		
NA			Indicate spaces on plans where time switch controls are configured to turn on lighting to full power versus 50% power		
NA			Indicate locations of override switches on plans and the lighting zone(s) served; indicate that the area(s) served by each override switch does not exceeds 5,000 sf		
NA	C405.2.1, Exception 3	Digital timer switch	Indicate digital timer switch control includes: manual on/off, time delay, audible and visual indication of impending time-out		
NA	C405.2.4.2 C405.2.4.3	Daylight zones - Sidelit and toplit	Indicate primary and secondary sidelit daylight zone floor areas on plans		
NA			Indicate toplit daylight zone floor areas on plans		
NA			For small vertical fenestration assemblies (rough opening less than 10 percent of primary daylight zone floor area) where daylight responsive controls are not required, provide fenestration area to daylight zone floor area calculation(s)		

Lighting, Motor and Electrical Requirements List, pg 3 of 10

2018 WSEC Requirements for Commercial Buildings including Group R2, R3 & R4 over 3 stories & all R1 -- Administered by ©2023 NEEA, All rights reserved

The following information is necessary to check a permit application for compliance with the lighting systems, motors and electrical system requirements in the Washington State Energy Code, Commercial Provisions.
For questions about this report, contact WSEC Commercial Technical Support at 360-539-5300 or via email at com.techsupport@waenergycodes.com

NA	C405.2.4	Daylight responsive controls	Indicate on plans lighting zone(s) served by daylight responsive controls; indicate that the area served by each control device does not exceeds 2,500 sf		
NA			Identify sidelit and toplit daylight zones that are not provided with daylight sensing controls and the exception(s) that apply		
NA	C405.2.4.1.1	Daylight responsive controls	Indicate on plans the lighting load reduction method (continuous dimming, or stepped dimming that provides at least two even steps between 0%–100% of rated power)		
NA	C405.2.4.1	Daylight responsive controls	Indicate that daylight sensing controls are configured to completely shut off all controlled lights in the lighting zone		
NA	C405.2.5	Additional controls - Specific application lighting controls	Identify spaces and lighting fixtures on plans that require specific application lighting controls per this section		
NA	C405.2.5, Item 1	Display and accent lighting	Indicate on plans that manual controls are provided that control display, accent lighting and display case lighting independently from both general area lighting and other lighting applications within the same space		
NA			Indicate manual and automatic (occupant sensor or time switch) lighting control methods		
NA	C405.2.5, Item 3	Hotel/motel guest rooms	Indicate method of automatic control - vacancy or captive key control of all installed luminaires and switched receptacles in guest room		
NA	C405.2.5, Item 1	Supplemental task lighting	Indicate method and location of manual and automatic shut-off control (occupant sensor or time switch) for supplemental task lighting, including under-shelf or under-cabinet lighting		
NA	C405.2.5, Item 1	Lighting equipment for sale or demonstration	Indicate on plans that lighting equipment for sale or demonstration are controlled independently from both general area lighting and other lighting applications within the same space		
NA			Indicate manual and automatic (occupant sensor or time switch) lighting control methods		
NA	C405.2.5, Item 4	Lighting for non-visual applications	Identify all eligible non-visual lighting applications on plans; indicate that the area served by each control device does not exceeds 4,000 sf		
NA			Indicate on plans that non-visual lighting are controlled independently from both general area lighting and other lighting applications within the same space		

Lighting, Motor and Electrical Requirements List, pg 4 of 10

2018 WSEC Requirements for Commercial Buildings including Group R2, R3 & R4 over 3 stories & all R1 -- Administered by ©2023 NEEA, All rights reserved

The following information is necessary to check a permit application for compliance with the lighting systems, motors and electrical system requirements in the Washington State Energy Code, Commercial Provisions.
For questions about this report, contact WSEC Commercial Technical Support at 360-539-5300 or via email at com.techsupport@waenergycodes.com

NA			Indicate method of manual lighting control and applicable automatic lighting control		
NA	C405.2.5, Item 5	Means of egress lighting	Identify on plans egress fixtures that function as both normal and emergency means of egress illumination		
NA			Provide calculation of lighting power density of total egress lighting		
NA			If total egress lighting power density is greater than 0.02 W/sq. ft., indicate on plans egress fixtures requiring automatic shut-off during unoccupied periods		
NA			Indicate method of automatic shut-off control		
NA	C405.4.1 C405.4.2	Lighting control of exempt interior lighting	Indicate that exempt interior lighting equipment and lighting located within spaces that are eligible for a lighting power exemption are controlled independently from non-exempt and general area lighting		
NA	C405.2.6	Exterior lighting controls	For decorative exterior lighting, indicate on plans automatic daylight shut-off controls, or exception taken		
YES			For exterior lighting that is not decorative, indicate on plans automatic daylight or time-switch shut-off controls and setback controls; or indicate exception taken	E1.01	
NA			For lighting requiring setback controls, include control sequence that reduces lighting power by at least 30% between 12am-6am, or from 1 hour after closing to 1 hour before opening, or based upon motion sensor		
NA			For building facade and landscape lighting, indicate control sequence for shut-off control is based on dawn-to-dusk and business opening/closing schedule; indicate whether automatic or time switch controls will be provided for this function		
NA	C405.5.2	Lighting control of exempt exterior lighting	Indicate that exempt exterior lighting and lighting located within exterior areas/surfaces that eligible for a lighting power exemption are controlled independently from non-exempt exterior lighting		
NA	C405.5.4	Exterior gas-fired lighting appliances	Indicate ignition system is a method other then continuously burning pilot light		
NA	C405.2.7	Area controls - Master control switches and circuit power limit	Indicate location(s) of master control switch(es) intended to control multiple independent switches; circuit breaker may not be used as a master control switch		
NA			Verify that no 20 amp circuit controlled by a single switch or automatic control is loaded beyond 80%		
ADDITIONAL EFFICIENCY CREDIT - ENHANCED INTERIOR LIGHTING CONTROLS					

PRCNC20240216

ZERVAS
ARCHITECTURE | INTERIOR DESIGN
zervasgroup.com
209 Prospect Street
Bellingham, WA 98225
360.734.4744

COFFMAN ENGINEERS
1101 2nd Avenue,
Suite 400
Seattle, WA 98101
ph 206.623.0717
www.coffman.com

CHRISTOPHER J. BAKKEN — STATE OF WASHINGTON — 31344 — REGISTERED PROFESSIONAL ENGINEER
1/25/2024

City of Puyallup
Development & Permitting Services
ISSUED PERMIT
Building | Planning | Engineering | Public Works | Fire | Traffic

100% CD SET

REV	ISSUED FOR	DATE

SCALE: NONE

PSE - OPERATIONAL TRAINING CENTER

NREC - CONTROL BUILDING

PROJECT No:	221158
DRAWN BY:	RMF
CHECKED BY:	CJB
DATE ISSUED:	01/26/24

E0.07

© 2022

Lighting, Motor and Electrical Requirements List, pg 5 of 10

2018 WSEC Requirements for Commercial Buildings including Group R2, R3 & R4 over 3 stories & all R1 -- Administered by ©2023 NEEA, All rights reserved
The following information is necessary to check a permit application for compliance with the lighting systems, motors and electrical system requirements in the Washington State Energy Code, Commercial Provisions.
For questions about this report, contact WSEC Commercial Technical Support at 360-539-5300 or via email at com.techsupport@waenergycodes.com

NA	C406.4	Enhanced digital lighting controls	To comply with additional efficiency credit, indicate on plans that interior lighting fixtures are configured with all of the following control functions, as applicable: 1) Each fixture is individually addressed, or exception taken; 2) Fixtures are configured for continuous dimming; 3) No more than eight fixtures are controlled by a single daylight sensor; 4) In enclosed and open office areas, illumination levels of overhead general area lighting is configured to be individually adjusted by occupants		
NA			Include calculations that demonstrate the total lighting power of all interior lighting fixtures configured with enhanced lighting controls is no less than 90% of the total interior lighting power for the area the enhanced lighting controls credit is being applied to		
INTERIOR LIGHTING POWER & EFFICACY					
YES	C405.4.1 C405.4.2	Total connected interior lighting power	Include all luminaires in interior lighting fixture schedule; indicate fixture types, lamps, ballasts, and manufacturer's watts per fixture for the installed lamp	E0.03	
YES			Identify spaces eligible for lighting power exemption on plans and in WSEC interior lighting compliance reports; indicate the exception applied	E0.07-0.08	
NA			Identify lighting equipment eligible for lighting power exemption in fixture schedule and in WSEC interior lighting compliance reports; indicate the exception applied		
NA	C405.1 C405.1.1	Lighting in dwelling units (multifamily)	For all installed luminaires, include lamp type and number of lamps in lighting fixture schedule; for lamps that are not LED, T-8 or small diameter fluorescent, indicate efficacy of other lamp types is 65 lumens per watt or greater		
NA			For all installed luminaires, indicate in lighting fixture schedule whether complying via lighting power density or by qualifying lamp type; if by lamp type, include number of lamps		
NA			For all installed luminaires, indicate in lighting fixture schedule whether complying via lighting power density or by qualifying lamp type; if by lamp type, include number of lamps		
INTERIOR LIGHTING POWER CALCULATION - INDICATE COMPLIANCE PATH TAKEN					
YES	C405.4.2.1	Building Area Method	Demonstrate that total proposed wattage per building area does not exceed maximum allowed wattage per building area; identify locations of building areas on plans; provide WSEC exterior lighting compliance reports		

Lighting, Motor and Electrical Requirements List, pg 6 of 10

2018 WSEC Requirements for Commercial Buildings including Group R2, R3 & R4 over 3 stories & all R1 -- Administered by ©2023 NEEA, All rights reserved
The following information is necessary to check a permit application for compliance with the lighting systems, motors and electrical system requirements in the Washington State Energy Code, Commercial Provisions.
For questions about this report, contact WSEC Commercial Technical Support at 360-539-5300 or via email at com.techsupport@waenergycodes.com

NA	C405.4.2.2	Space-By-Space Method	Demonstrate that total proposed wattage does not exceed maximum allowed wattage; identify locations of space types on plans, including retail display areas and areas with display, highlight and decorative lighting; provide WSEC exterior lighting compliance reports		
ADDITIONAL EFFICIENCY CREDITS - REDUCED INTERIOR LIGHTING POWER DENSITY					
YES	C406.3.1 C406.3.2	Reduced interior lighting power density	To comply with additional efficiency credit, demonstrate that total connected interior lighting wattage is 10% or 20% less than the total maximum allowed lighting wattage for the area the reduced lighting power credit is being applied to; indicate whether lighting power allowance is based on the building area method or space-by-space method; provide WSEC exterior lighting compliance reports	10%	
NA	C406.3	Reduced interior lighting power density - dwelling unit lamp efficacy	For project with dwelling units, to comply with additional efficiency credit indicate in lighting fixture schedule that lamps within installed interior luminaires have an efficacy rating of at least 65 lumens per watt; include number of lamps and provide calculations that demonstrate at least 95% of lamps have this efficacy rating		
EXTERIOR LIGHTING POWER & EFFICACY					
YES	C405.5.2	Total connected exterior lighting power	Include all luminaires in exterior lighting fixture schedule; indicate fixture types, lamps, ballasts, and manufacturer's watts per fixture for the installed lamp	E0.03	
YES			Identify exterior applications eligible for lighting power exemption on plans and in WSEC exterior lighting compliance reports; indicate exception applied	E0.07-0.08	
YES	C405.5.3(1)	Exterior lighting zone	Indicate building exterior lighting zone as specified by the AHJ	2	
NA	C405.5.1	Exterior building grounds lighting	For building grounds fixtures rated at greater than 50 watts, indicate rated lamp efficacy (in lumens per watt) in fixture schedule		
EXTERIOR LIGHTING POWER CALCULATION					
YES	C405.5.3	Tradable allowances	Demonstrate that total proposed tradable surface wattage does not exceed maximum allowed tradable surface wattage (including base site allowance); identify locations of tradable surfaces on plans; provide WSEC exterior lighting compliance reports	E0.07-0.08	

Lighting, Motor and Electrical Requirements List, pg 7 of 10

2018 WSEC Requirements for Commercial Buildings including Group R2, R3 & R4 over 3 stories & all R1 -- Administered by ©2023 NEEA, All rights reserved
The following information is necessary to check a permit application for compliance with the lighting systems, motors and electrical system requirements in the Washington State Energy Code, Commercial Provisions.
For questions about this report, contact WSEC Commercial Technical Support at 360-539-5300 or via email at com.techsupport@waenergycodes.com

NA			Demonstrate that proposed wattage per non-tradable surface type does not exceed maximum allowed wattage per non-tradable surface type (including base site allowance remaining after tradable allowance calculation); identify locations of non-tradable surfaces on plans; provide WSEC exterior lighting compliance reports		
LIGHTING ALTERATIONS					
NA	C503.6.1	Interior and parking garage lighting fixture alterations	Where ≥ 50% of existing luminaires in an interior space or parking garage are replaced; indicate compliance path (building area or space-by-space method); include all new and existing-to-remain luminaires in WSEC interior lighting compliance reports; indicate proposed lighting wattage does not exceed maximum allowed per compliance path		
NA			Where < 50% of existing luminaires in an interior space or parking garage are replaced; indicate total existing lighting wattage in each space prior to alteration; include all new and existing-to-remain luminaires in WSEC interior lighting compliance reports; indicate proposed total lighting wattage in alteration area does not exceed total existing lighting wattage prior to alteration		
NA			Where ≥ 50% of existing exterior lighting wattage is replaced; include all new and existing-to-remain luminaires in WSEC exterior lighting compliance reports; indicate proposed total exterior lighting wattage does not exceed maximum allowed		
NA			Where < 50% of existing exterior lighting wattage is replaced; indicate total existing lighting wattage prior to alteration; include all new and existing-to-remain luminaires in WSEC interior exterior compliance reports; indicate proposed total exterior lighting wattage does not exceed total existing wattage prior to alteration		
NA	C503.6.2	Interior lighting wiring and circuiting alterations	Where new wiring is installed to serve new interior luminaires and /or luminaires are relocated to a new circuit; indicate manual and automatic lighting controls are provided (as applicable) - manual (C405.2.3); occupancy sensor (C405.2.1); light reduction (C405.2.3); daylight responsive (C405.2.4); specific application (C405.2.5)		
NA			Where new wiring is installed to serve new exterior luminaires and /or luminaires are relocated to a new circuit; indicate automatic lighting controls are provided (C405.2.6)		

Lighting, Motor and Electrical Requirements List, pg 8 of 10

2018 WSEC Requirements for Commercial Buildings including Group R2, R3 & R4 over 3 stories & all R1 -- Administered by ©2023 NEEA, All rights reserved
The following information is necessary to check a permit application for compliance with the lighting systems, motors and electrical system requirements in the Washington State Energy Code, Commercial Provisions.
For questions about this report, contact WSEC Commercial Technical Support at 360-539-5300 or via email at com.techsupport@waenergycodes.com

NA	C503.6.3	Lighting panel alterations	Where a new interior and/or exterior lighting panel is installed or an existing panel is moved (all new raceway and conductor wiring), indicate all applicable lighting controls requirements apply		
NA	C503.6.4	Newly-created rooms	Where interior space(s) is reconfigured (permanently installed walls or ceiling-height partitions) to create new enclosed spaces, indicate all applicable lighting controls requirements apply		
NA	C504.2	Lighting repairs	Identify existing luminaires being upgraded with bulb and / or ballast replacement; indicate fixture alteration does not increase existing fixture wattage		
NA	C505.1	Change of interior space use	Identify spaces on plans where the building area type or space use type is being changed from one type to another per Tables C405.4.2(1) or (2)		
NA			Indicate compliance method (building area or space-by-space); include all new and existing-to-remain luminaires in WSEC interior lighting compliance reports; indicate proposed lighting wattage does not exceed maximum allowed per compliance path		
RECEPTACLES					
NA	C405.10	Controlled receptacles	Identify all controlled and uncontrolled receptacles on electrical plans in each space in which they are required; include receptacle configuration such as spacing between controlled and uncontrolled, duplex devices, etc		
NA			Provide schedule that lists the number of controlled and uncontrolled receptacles in each space where controlled receptacles are required - classrooms, private offices, open office areas, conference rooms, copy rooms, break rooms and modular partitions/workstations		
NA			Indicate on plans the method of automatic control for each controlled receptacle zone (occupant sensor or programmable time-of-day control); indicate that each zone served by a single controller does not exceed 5,000 sf		
NA	C405.2.5, Item 2	Switched receptacles in sleeping units	Indicate method of automatic off control of all switched receptacles in sleeping units (vacancy or key card control)		
NA	C503.6.6	Electrical receptacle alterations	Where new receptacles are added or replaced within an alteration project that is 5,000 sf or larger, indicate receptacles are provided with automatic controls per C405.10, or exception taken		
MOTORS, TRANSFORMERS, ELECTRIC METERS, INTERIOR TRANSPORTATION					

Lighting, Motor and Electrical Requirements List, pg 9 of 10

2018 WSEC Requirements for Commercial Buildings including Group R2, R3 & R4 over 3 stories & all R1 -- Administered by ©2023 NEEA, All rights reserved
The following information is necessary to check a permit application for compliance with the lighting systems, motors and electrical system requirements in the Washington State Energy Code, Commercial Provisions.
For questions about this report, contact WSEC Commercial Technical Support at 360-539-5300 or via email at com.techsupport@waenergycodes.com

NA	C405.6	Electrical transformers	Include electrical transformer schedule on electrical plans; indicate transformer type, size, efficiency, or exception taken		
NA	C405.11	Feeders and branch circuits	Provide documentation that demonstrates maximum voltage drop across feeders and branch circuits does not exceed 5%		
NA	C405.7	Dwelling unit electrical energy consumption	Indicate on electrical plans that each dwelling unit in Group R-2 has a separate electrical energy meter		
NA	C405.8	Electric motor efficiency	Include all motors, including fractional hp motors, in electric motor schedule on electrical plans; indicate motor type, horsepower, rpm, rated efficiency, or exception applied		
NA	C405.9.1	Elevator cabs	For luminaires in each elevator cab, provide calculations that demonstrate average efficacy is not less than 35 lumens per watt		
NA			For elevators that do not have an integral air conditioning system, indicate rated watts per cfm for elevator cab ventilation fans do not exceed 0.33 watts per cfm		
NA			Indicate automatic controls that de-energize lighting and ventilation fans when elevator is stopped and unoccupied for a period of 15 minutes or more		
NA	C405.9.2	Escalators and moving walks	Indicate escalators comply with ASME A17.1/CSA B44; automatic controls are configured to reduce operational speed to the minimum permitted when not in use		
NA	C405.9.3	Regenerative drive	Indicate all one-way down or reversible escalators are provided with a variable frequency regenerative drive		
DOCUMENTATION AND SYSTEM REQUIREMENTS TO SUPPORT COMMISSIONING (CX)					
NA	C408.4	Scope of electrical power and lighting systems commissioning	Indicate that all electrical systems (receptacles, transformers, motors, vertical and horizontal transportation) for which the WSEC requires control functions and / or configuration to perform specific functions are required to be commissioned		
NA			Where total building lighting load is > 20 kW, or where total lighting load of luminaires requiring daylight sensing and / or occupancy control > 10 kW, indicate that all automatic lighting control systems are required to be commissioned; or provide building lighting power calculation demonstrating eligibility for exception		
NA	C405.13 C408.1.1 C408.1.2 C408.1.4.2 C103.6.3	Commissioning requirements in construction documents	Indicate Cx requirements in plans and specifications for all applicable electrical and lighting control systems per C408		

Lighting, Motor and Electrical Requirements List, pg 10 of 10

2018 WSEC Requirements for Commercial Buildings including Group R2, R3 & R4 over 3 stories & all R1 -- Administered by ©2023 NEEA, All rights reserved
The following information is necessary to check a permit application for compliance with the lighting systems, motors and electrical system requirements in the Washington State Energy Code, Commercial Provisions.
For questions about this report, contact WSEC Commercial Technical Support at 360-539-5300 or via email at com.techsupport@waenergycodes.com

NA	C408.1.2 C408.1.2.1 C408.1.4 C103.6.3	Commissioning requirements in construction documents	Include general summary of Cx plan per C408.1.2 including: 1) Narrative description of activities; 2) Responsibilities of the Cx team; 3) Schedule of activities including verification of project close out documentation per C103.6; 4) Conflict of interest plan (if required)		
NA	C408.1.2 C408.1.4 C103.6.3	Commissioning requirements in construction documents	Include in general summary that a Cx project report and Compliance Checklist (Figure C408.1.4.1) shall be completed by the Certified Cx Professional and provided to the owner prior to the final electrical inspection		
YES	C408.4.1	Functional performance testing criteria	Identify in plans and specifications the intended operation of all equipment and controls during all modes of operation, including interfacing between new and existing-to-remain systems	E0.01	
PROJECT CLOSE OUT DOCUMENTATION					
YES	C103.6.3	Project close out documentation requirements	Indicate in plans that project close out documentation is required including WSEC lighting compliance reports that document all interior and exterior lighting area and / or surface types, lighting power allowances and installed densities	E0.01	
If "no" is selected for any question, provide explanation.					

PRCNC20240216

ZERVAS
ARCHITECTURE | INTERIOR DESIGN
zervasgroup.com
209 Prospect Street
Bellingham, WA 98225
360.734.4744

COFFMAN ENGINEERS
1101 2nd Avenue,
Suite 400
Seattle, WA 98101
ph 206.623.0717
www.coffman.com

CHRISTOPHER J. BAKKER — STATE OF WASHINGTON — 31344 — REGISTERED PROFESSIONAL ENGINEER
1/25/2024

City of Puyallup
Development & Permitting Services
ISSUED PERMIT
Building | Planning | Engineering | Public Works | Fire | Traffic

100% CD SET

REV	ISSUED FOR	DATE

SCALE: NONE

PSE - OPERATIONAL TRAINING CENTER

NREC - CONTROL BUILDING

PROJECT No:	221158
DRAWN BY:	RMF
CHECKED BY:	CJB
DATE ISSUED:	01/26/24

E0.08

© 2022

PRCNC20240216

FLAG NOTES

1. PROVIDE OPTICOM ELECTRIC GATES WITH MANUAL OVERRIDE. REFER TO ACCESS GATE SHOP DRAWING FOR GROUND LOOP WIRING DETAILS.
2. PROVIDE JOINT TRENCH FOR ALL DRY UTILITIES INCLUDING PRIMARY, COMMUNICATIONS AND STREET LIGHTING.
3. PAD MOUNT GENERATOR AND GROUND RING. REFER TO DETAIL 1/E7.01.
4. (4) 2" C. TO VAULT NEAR GATE MOTOR.
5. PROVIDE THE FOLLOWING EQUIPMENT CONNECTIONS AND BRANCH CIRCUIT WIRING TO ACCOMMODATE THE GENERATOR ACCESSORIES:
   1. BLOCK HEATER: 208V–1P–1kW: EL1–8,10
   2. BATTERY CHARGER: 120V–1P–2A: EL1–12
   3. CONTROLS, LIGHTS, RECEPTACLE: 120V–1P–2A: EL1–14
6. PROVIDE 1" C. FROM GATE CONTROLLER TO MAIN ELECTRICAL ROOM. PROVIDE (2) 2" C. FROM GATE CONTROLLER TO SECURITY ROOM.
7. PROVIDE 48"x48" WP NEMA–3R BOX WITH DOUBLE DUPLEX RECEPTACLES. PROVIDE (2) 2" C. FROM BOX TO SECURITY ROOM.
8. PROVIDE 24"x24" WP NEMA–3R BOX AT EACH CAMERA POLE. PROVIDE (1) 2" C. FROM BOX TO SECURITY ROOM.

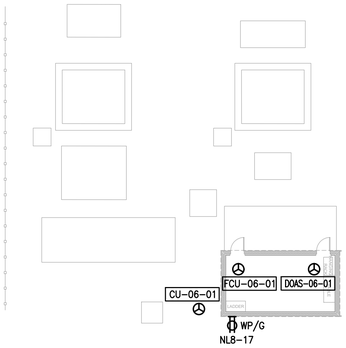

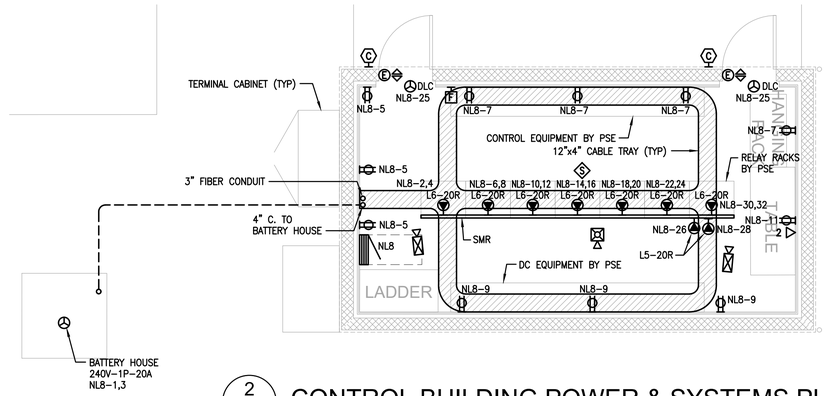

2 E1.01 CONTROL BUILDING POWER & SYSTEMS PLAN
SCALE: 1/4" = 1'–0"

3 E1.01 MECHANICAL POWER PLAN
SCALE: 1/16" = 1'–0"

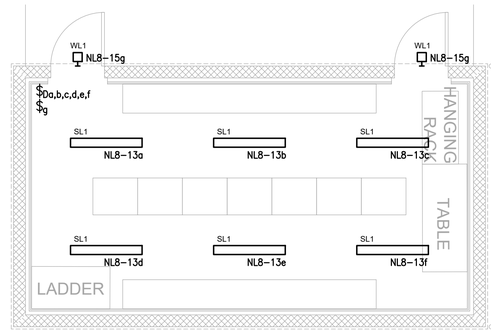

4 E1.01 CONTROL BUILDING LIGHTING PLAN
SCALE: 1/4" = 1'–0"

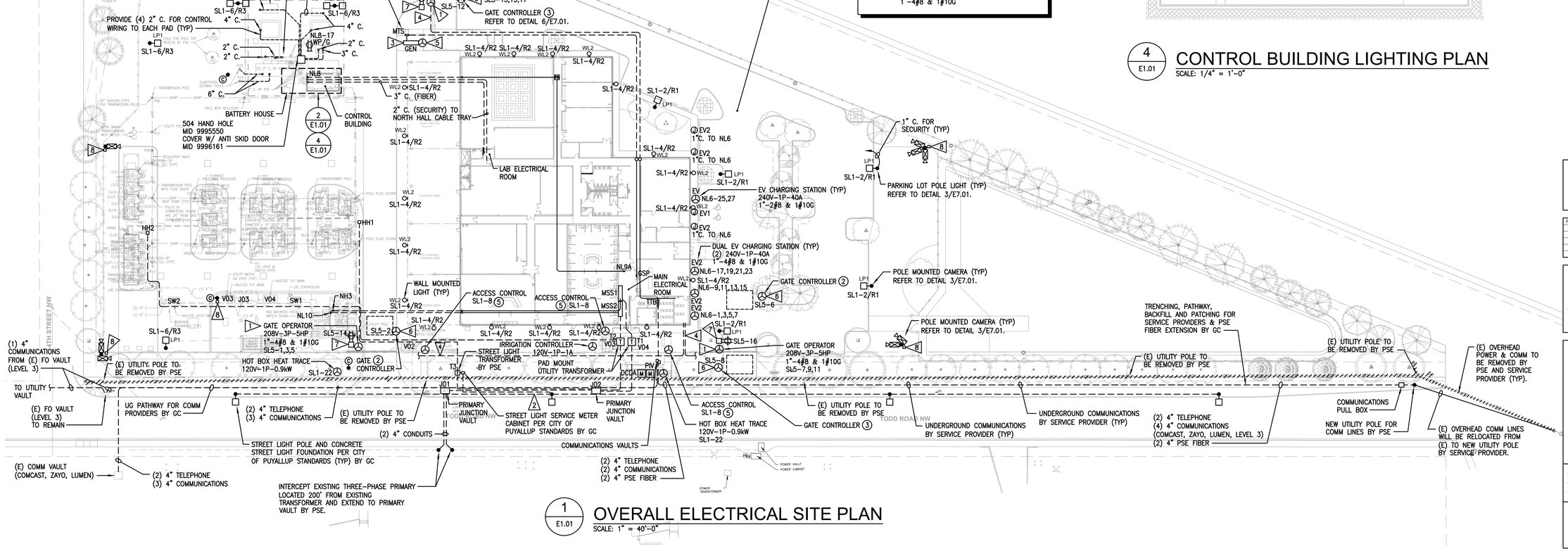

1 E1.01 OVERALL ELECTRICAL SITE PLAN
SCALE: 1" = 40'–0"

ZERVAS
ARCHITECTURE | INTERIOR DESIGN
zervasgroup.com
209 Prospect Street
Bellingham, WA 98225
360.734.4744

COFFMAN ENGINEERS
1101 2nd Avenue,
Suite 400
Seattle, WA 98101
ph 206.623.0717
www.coffman.com

CHRISTOPHER J. BARKER — STATE OF WASHINGTON — 31344 — REGISTERED PROFESSIONAL ENGINEER
1/25/2024

City of Puyallup
Development & Permitting Services
ISSUED PERMIT
Building | Planning | Engineering | Public Works | Fire | Traffic

100% CD SET

REV	ISSUED FOR	DATE

PLAN NORTH | TRUE NORTH
SCALE: 1"=40'-0" (0 – 40')

PSE - OPERATIONAL TRAINING CENTER

OVERALL ELECTRICAL SITE PLAN

PROJECT No:	221158
DRAWN BY:	RMF
CHECKED BY:	CJB
DATE ISSUED:	01/26/24

E1.01

© 2022

PRCNC20240216

ZERVAS
ARCHITECTURE | INTERIOR DESIGN
zervasgroup.com
209 Prospect Street
Bellingham, WA 98225
360.734.4744

COFFMAN ENGINEERS
1101 2nd Avenue,
Suite 400
Seattle, WA 98101
ph 206.623.0717
www.coffman.com



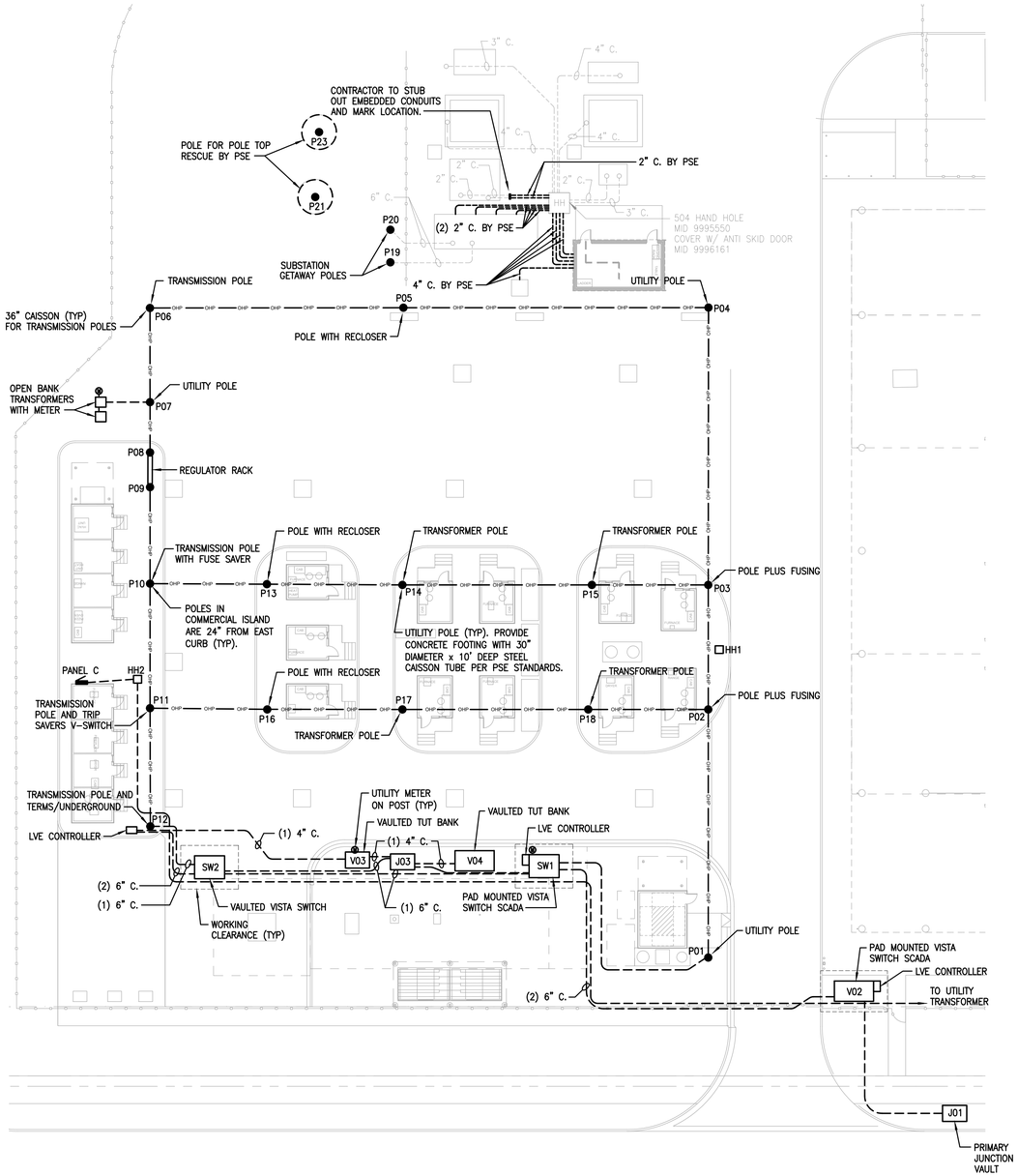

1 E1.02 PARTIAL ELECTRICAL SITE PLAN
SCALE: 1" = 20'-0" (OUTDOOR VILLAGE REFER TO E5.02)

(PRIMARY DISTRIBUTION SYSTEM DESIGN-BUILD BY PSE)

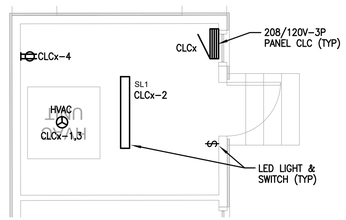

3 E1.02 TYPICAL COMMERCIAL UNIT
SCALE: 1/4" = 1'-0"

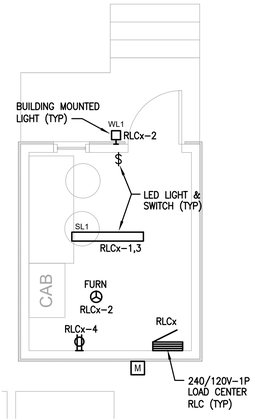

4 E1.02 TYPICAL RESIDENTIAL UNIT
SCALE: 1/4" = 1'-0"

2 E1.02 PARTIAL ELECTRICAL SITE PLAN
SCALE: 1" = 20'-0" (OUTDOOR VILLAGE REFER TO E5.02)

100% CD SET

REV	ISSUED FOR	DATE

PLAN NORTH | TRUE NORTH

SCALE: 1"=40'-0" 0 40'

PSE - OPERATIONAL TRAINING CENTER

PARTIAL ELECTRICAL SITE PLAN

PROJECT No:	221158
DRAWN BY:	RMF
CHECKED BY:	CJB
DATE ISSUED:	01/26/24

E1.02

© 2022

City of Puyallup
Development & Permitting Services
ISSUED PERMIT
Building | Planning
Engineering | Public Works
Fire | Traffic

PRCNC20240216

GENERAL NOTES

1. PROVIDE UNISTRUT TRAPEZE HANGER MOUNTS FOR ALL PENDANT LIGHTING.
2. MOUNT ALL PENDANT LIGHTS IN CORRIDORS AND BACK OF HOUSE SPACES AT 10'-0" AFF.

FLAG NOTES

1. MOUNT LIGHT FIXTURES BELOW DUCTWORK. PROVIDE UNISTRUT TRAPEZE HANGER MOUNTS.
2. MOUNT BOTTOM OF PENDANT LIGHTS AT 10'-0" AFF.
3. MOUNT BOTTOM OF PENDANT LIGHTS AT 20'-0" AFF.
4. MOUNT BOTTOM OF PENDANT LIGHTS AT 12'-0" AFF.

LIGHTING IN THIS AREA IS CIRCUITED TO SL1-37. EM LIGHTING CIRCUITED TO EL1-15.

LIGHTING IN THIS AREA IS CIRCUITED TO SL1-23. EM LIGHTING CIRCUITED TO EL1-9.

LIGHTING IN CORRIDORS IS CIRCUITED TO EL1-7.

LIGHTING IN THIS AREA IS CIRCUITED TO SL1-31.

LIGHTING IN THIS AREA IS CIRCUITED TO SL1-31. EM LIGHTING CIRCUITED TO EL1-13.

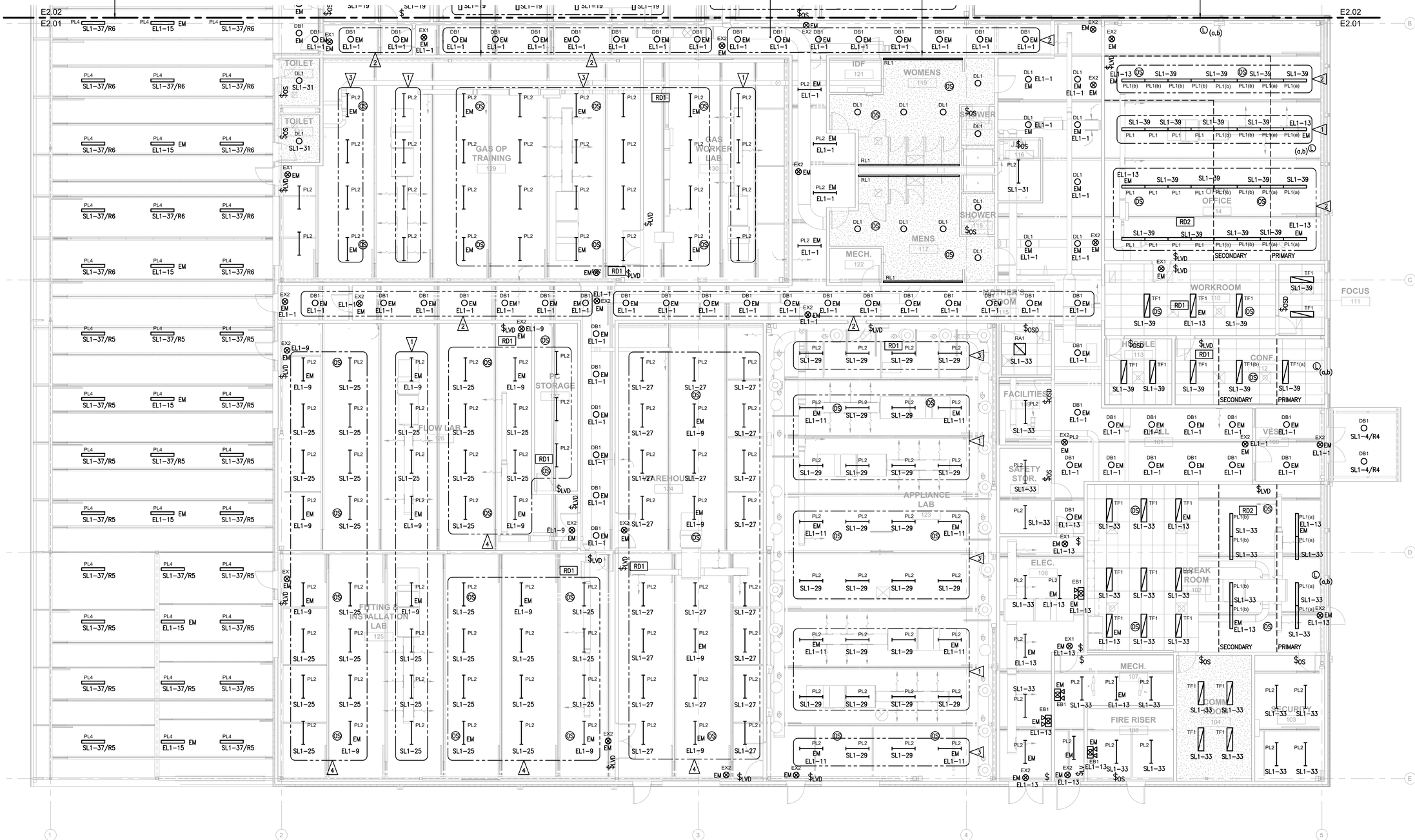

LIGHTING PLAN

SCALE: 1/8" = 1'-0"

1/8"=1'-0" 0 2 4 6 8 16 24

ZERVAS

ARCHITECTURE | INTERIOR DESIGN
zervasgroup.com
209 Prospect Street
Bellingham, WA 98225
360.734.4744

COFFMAN ENGINEERS
1101 2nd Avenue,
Suite 400
Seattle, WA 98101
ph 206.623.0717
www.coffman.com

CHRISTOPHER J. BAKKER — STATE OF WASHINGTON — 31344 — REGISTERED PROFESSIONAL ENGINEER
1/25/2024

City of Puyallup
Development & Permitting Services
ISSUED PERMIT
Building | Planning | Engineering | Public Works | Fire | Traffic

100% CD SET

REV	ISSUED FOR	DATE

PLAN NORTH | TRUE NORTH

SCALE: 1/8"=1'-0" 0 8'

PSE - OPERATIONAL TRAINING CENTER

LIGHTING PLAN

PROJECT No:	221158
DRAWN BY:	RMF
CHECKED BY:	CJB
DATE ISSUED:	01/26/24

E2.01

© 2022

PRCNC20240216

GENERAL NOTES

1. PROVIDE UNISTRUT TRAPEZE HANGER MOUNTS FOR ALL PENDANT LIGHTING.
2. MOUNT ALL PENDANT LIGHTS IN CORRIDORS AND BACK OF HOUSE SPACES AT 10'-0" AFF.

FLAG NOTES

1. MOUNT LIGHT FIXTURES BELOW DUCTWORK. PROVIDE UNISTRUT TRAPEZE HANGER MOUNTS.
2. MOUNT BOTTOM OF PENDANT LIGHTS AT 10'-0" AFF.
3. MOUNT BOTTOM OF PENDANT LIGHTS AT 20'-0" AFF.
4. MOUNT BOTTOM OF PENDANT LIGHTS AT 12'-0" AFF.

ZERVAS

ARCHITECTURE | INTERIOR DESIGN
zervasgroup.com
209 Prospect Street
Bellingham, WA 98225
360.734.4744

COFFMAN ENGINEERS
1101 2nd Avenue,
Suite 400
Seattle, WA 98101
ph 206.623.0717
www.coffman.com

CHRISTOPHER J. BAKKER — STATE OF WASHINGTON — 31344 — REGISTERED PROFESSIONAL ENGINEER

1/25/2024

City of Puyallup
Development & Permitting Services
ISSUED PERMIT

Building	Planning
Engineering	Public Works
Fire	Traffic

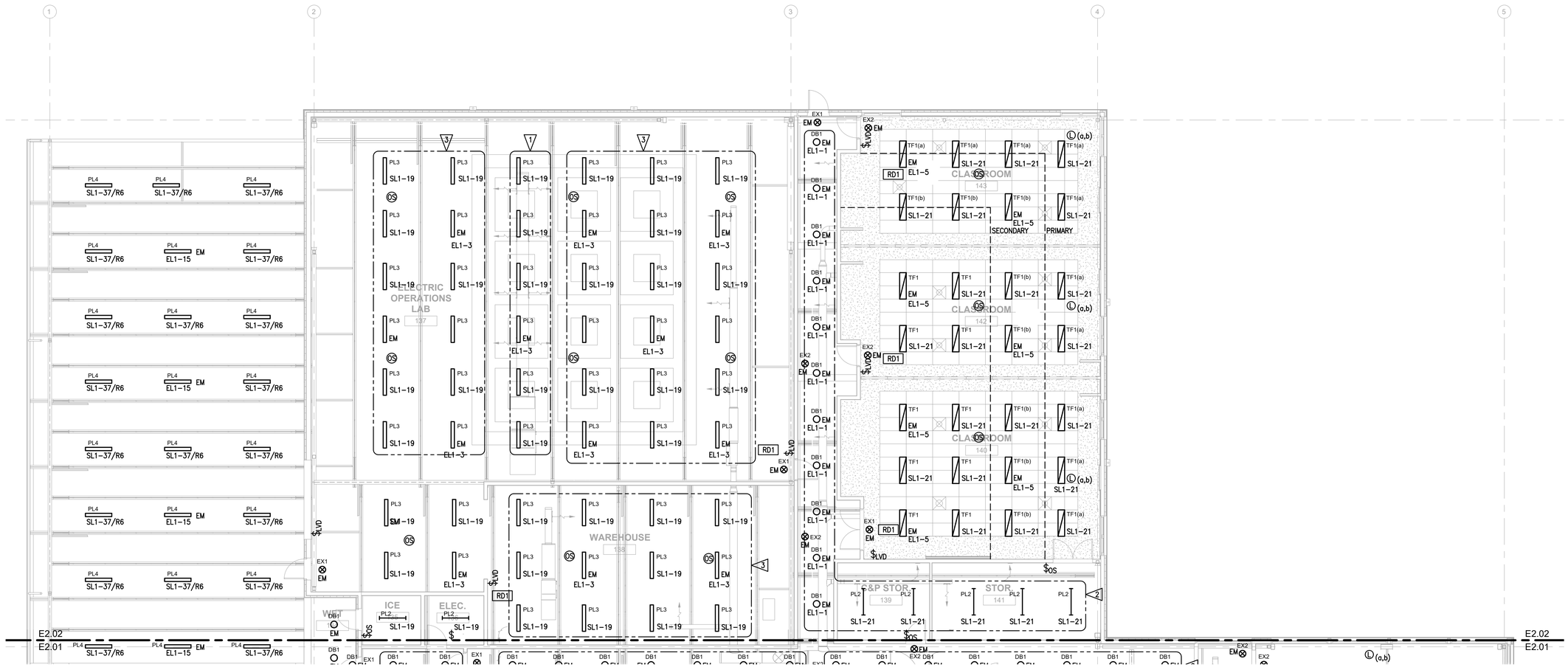

LIGHTING PLAN

SCALE: 1/8" = 1'-0"

1/8"=1'-0" 0 2 4 6 8 16 24

100% CD SET

REV	ISSUED FOR	DATE

PLAN NORTH — TRUE NORTH

SCALE: 1/8"=1'-0" 0 8'

PSE - OPERATIONAL TRAINING CENTER

LIGHTING PLAN

PROJECT No:	221158
DRAWN BY:	RMF
CHECKED BY:	CJB
DATE ISSUED:	01/26/24

E2.02

© 2022

PRCNC20240216

FLAG NOTES

1. PROVIDE WIRING BETWEEN ROLL DOWN DOOR, SAFETY SENSOR AND WALL CONTROL STATION.
2. ROUTE CONDUIT IN STRUCTURE FROM CEILING.
3. PROVIDE 1.5" C. FROM RTU TO ROOFTOP WEATHERHEAD TO ACCOMMODATE CELLULAR AND RADIO CABLING.
4. PROVIDE MASTER KEY SWITCH TO ENABLE/DISABLE APPLIANCE RECEPTACLES ON ROOM PERIMETER.

ZERVAS

ARCHITECTURE | INTERIOR DESIGN
zervasgroup.com
209 Prospect Street
Bellingham, WA 98225
360.734.4744

COFFMAN ENGINEERS
1101 2nd Avenue,
Suite 400
Seattle, WA 98101
ph 206.623.0717
www.coffman.com

CHRISTOPHER J. BAKKER — STATE OF WASHINGTON — 31344 — REGISTERED PROFESSIONAL ENGINEER
1/25/2024

City of Puyallup
Development & Permitting Services
ISSUED PERMIT
Building | Planning | Engineering | Public Works | Fire | Traffic

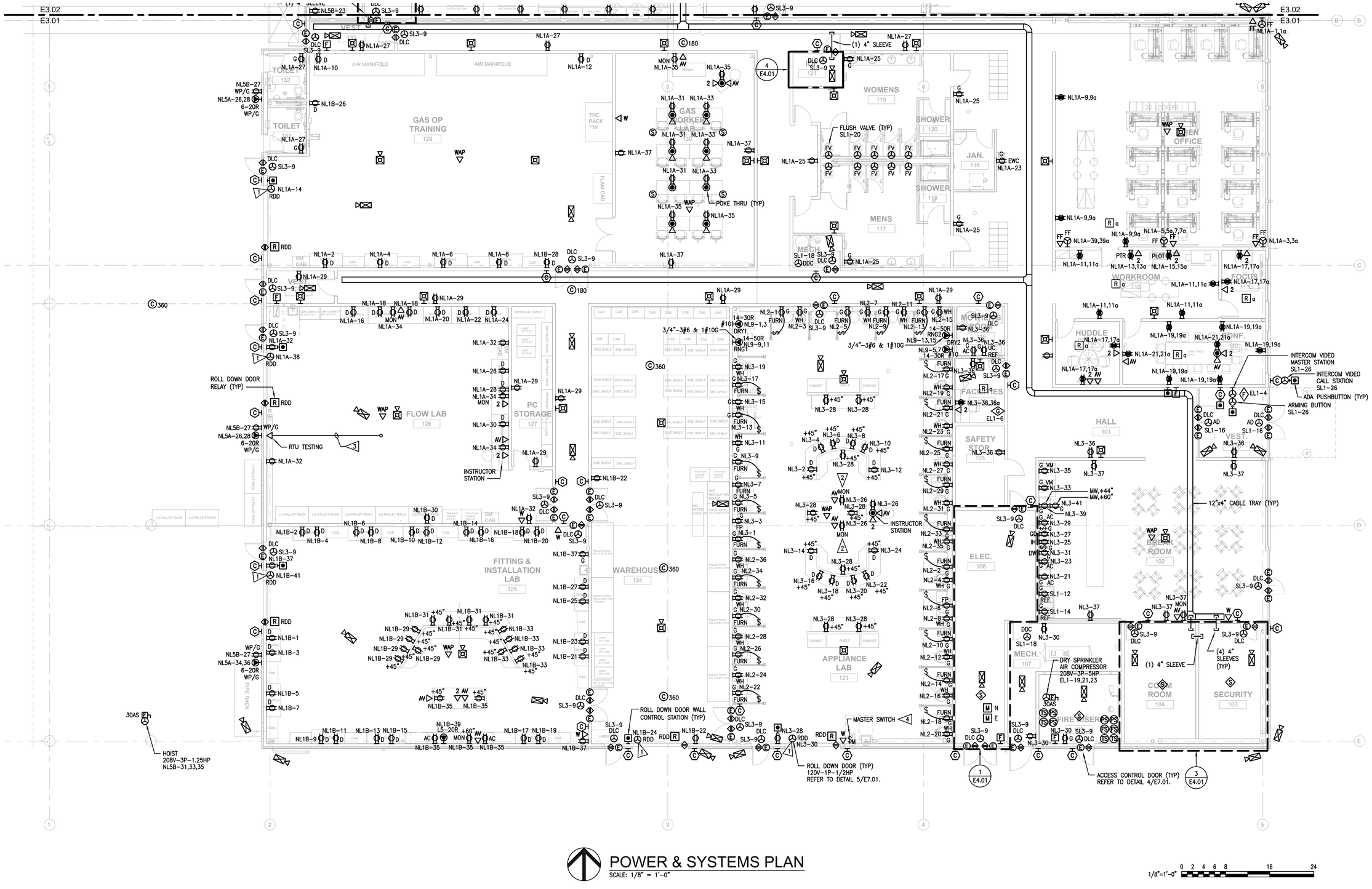

POWER & SYSTEMS PLAN
SCALE: 1/8" = 1'-0"

1/8"=1'-0" 0 2 4 6 8 16 24

100% CD SET

REV	ISSUED FOR	DATE

PLAN NORTH | TRUE NORTH
SCALE: 1/8"=1'-0" 0 8'

PSE - OPERATIONAL TRAINING CENTER

POWER & SYSTEMS PLAN

PROJECT No:	221158
DRAWN BY:	RMF
CHECKED BY:	CJB
DATE ISSUED:	01/26/24

E3.01

© 2022

PRCNC20240216

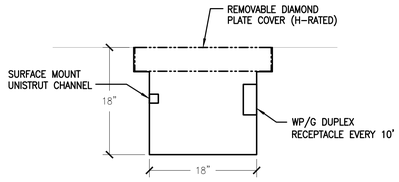

A / E3.02 TRENCH SECTION VIEW

SCALE: 1" = 1'-0"

FLAG NOTES

1. PROVIDE WIRING BETWEEN ROLL DOWN DOOR, SAFETY SENSOR AND WALL CONTROL STATION.
2. ROUTE CONDUIT IN STRUCTURE FROM CEILING.
3. PROVIDE 1.5" C. FROM RTU TO ROOFTOP WEATHERHEAD TO ACCOMMODATE CELLULAR AND RADIO CABLING.
4. PROVIDE MASTER KEY SWITCH TO ENABLE/DISABLE APPLIANCE RECEPTACLES ON ROOM PERIMETER.

ZERVAS

ARCHITECTURE | INTERIOR DESIGN
zervasgroup.com
209 Prospect Street
Bellingham, WA 98225
360.734.4744

COFFMAN ENGINEERS
1101 2nd Avenue,
Suite 400
Seattle, WA 98101
ph 206.623.0717
www.coffman.com

CHRISTOPHER J. BAKKER — STATE OF WASHINGTON — 31344 — REGISTERED PROFESSIONAL ENGINEER

1/25/2024

City of Puyallup
Development & Permitting Services
ISSUED PERMIT

Building	Planning
Engineering	Public Works
Fire	Traffic

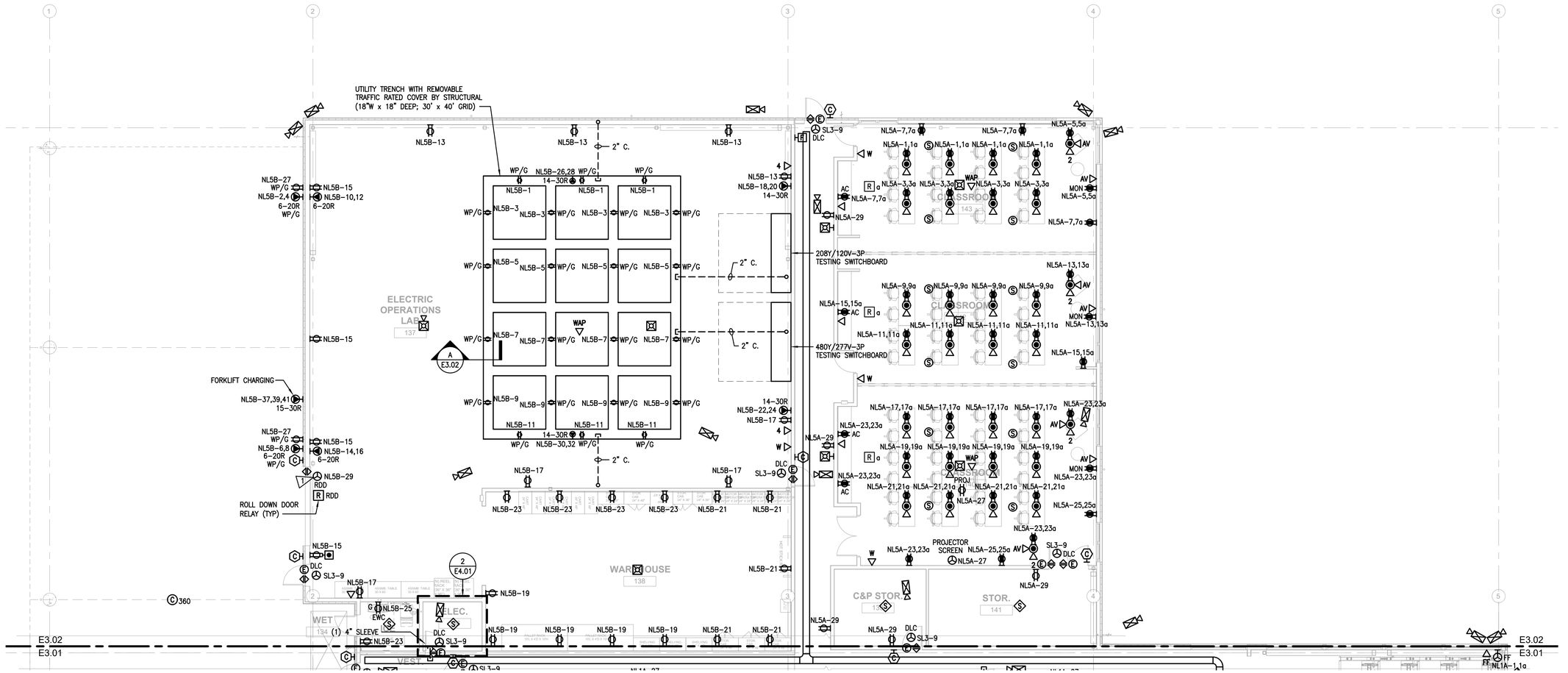

POWER & SYSTEMS PLAN

SCALE: 1/8" = 1'-0"

1/8"=1'-0" 0 2 4 6 8 16 24

100% CD SET

REV	ISSUED FOR	DATE

PLAN NORTH | TRUE NORTH

SCALE: 1/8"=1'-0" 0 8'

PSE - OPERATIONAL TRAINING CENTER

POWER & SYSTEMS PLAN

PROJECT No:	221158
DRAWN BY:	RMF
CHECKED BY:	CJB
DATE ISSUED:	01/26/24

E3.02

© 2022



1 / E3.02 MECHANICAL POWER PLAN

SCALE: 1/16" = 1'-0"

PRCNC20240216

ZERVAS

ARCHITECTURE | INTERIOR DESIGN
zervasgroup.com
209 Prospect Street
Bellingham, WA 98225
360.734.4744

COFFMAN ENGINEERS
1101 2nd Avenue,
Suite 400
Seattle, WA 98101
ph 206.623.0717
www.coffman.com

CHRISTOPHER J. BAKER
STATE OF WASHINGTON
31344
REGISTERED PROFESSIONAL ENGINEER
1/25/2024

City of Puyallup
Development & Permitting Services
ISSUED PERMIT
Building | Planning
Engineering | Public Works
Fire | Traffic

100% CD SET

REV	ISSUED FOR	DATE

PLAN NORTH | TRUE NORTH

SCALE: 1/8"=1'-0" 0 8'

PSE - OPERATIONAL TRAINING CENTER

MECHANICAL POWER PLAN

PROJECT No:	221158
DRAWN BY:	RMF
CHECKED BY:	CJB
DATE ISSUED:	01/26/24

E3.03

© 2022



1 E3.03 ROOF POWER PLAN

SCALE: 1/16" = 1'-0"

PRCNC20240216

ZERVAS

ARCHITECTURE | INTERIOR DESIGN
zervasgroup.com
209 Prospect Street
Bellingham, WA 98225
360.734.4744

COFFMAN ENGINEERS
1101 2nd Avenue,
Suite 400
Seattle, WA 98101
ph 206.623.0717
www.coffman.com

CHRISTOPHER J. BAKER
STATE OF WASHINGTON
31344
REGISTERED
PROFESSIONAL ENGINEER
1/25/2024

City of Puyallup
Development & Permitting Services
ISSUED PERMIT
Building | Planning
Engineering | Public Works
Fire | Traffic

100% CD SET

REV	ISSUED FOR	DATE

PLAN NORTH | TRUE NORTH

SCALE: 1/8"=1'-0" 0 8'

PSE - OPERATIONAL TRAINING CENTER

ROOF POWER PLAN

PROJECT No:	221158
DRAWN BY:	RMF
CHECKED BY:	CJB
DATE ISSUED:	01/26/24

E3.04

© 2022

PRCNC20240216

ZERVAS
ARCHITECTURE | INTERIOR DESIGN
zervasgroup.com
209 Prospect Street
Bellingham, WA 98225
360.734.4744

COFFMAN ENGINEERS
1101 2nd Avenue,
Suite 400
Seattle, WA 98101
ph 206.623.0717
www.coffman.com

CHRISTOPHER J. BAKKER — STATE OF WASHINGTON — 31344 — REGISTERED PROFESSIONAL ENGINEER
1/25/2024

City of Puyallup
Development & Permitting Services
ISSUED PERMIT
Building | Planning | Engineering | Public Works | Fire | Traffic

FLAG NOTES

1 ¾" AC FIRE-RATED PLYWOOD ON ALL FOUR WALLS FROM 2' TO 10'.

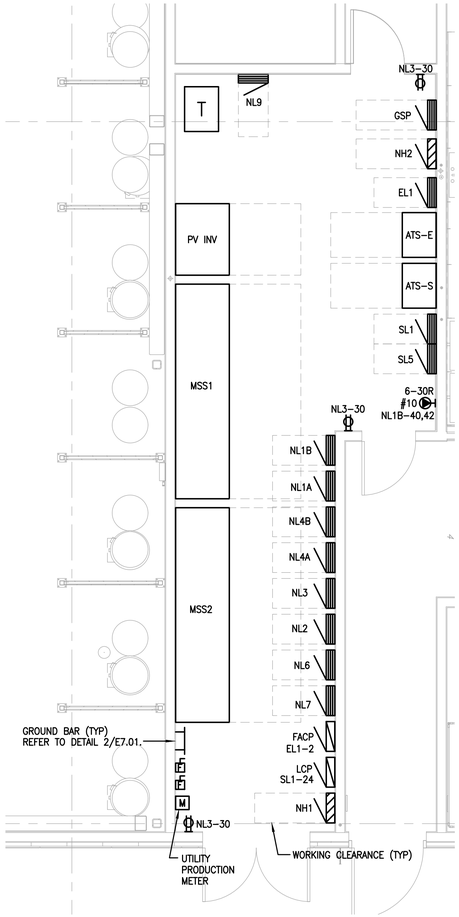

1 / E4.01 MAIN ELECTRICAL ROOM
SCALE: 1/4" = 1'-0"

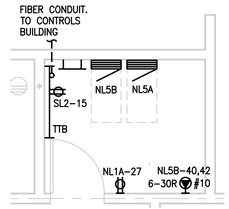

2 / E4.01 LAB ELECTRICAL ROOM
SCALE: 1/4" = 1'-0"

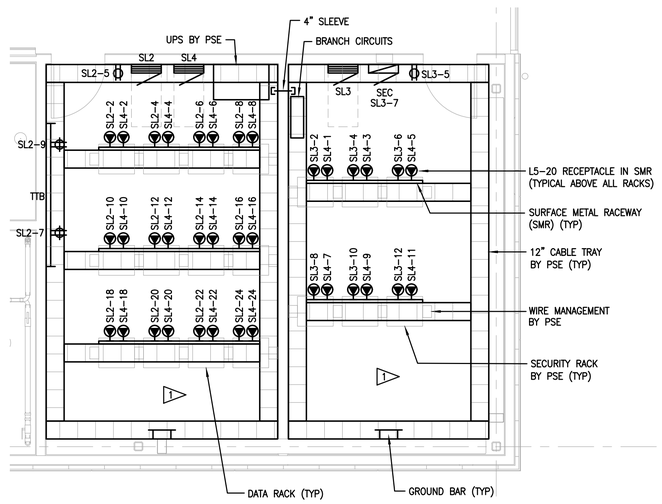

3 / E4.01 COMM ROOM & SECURITY ROOM
SCALE: 1/4" = 1'-0"

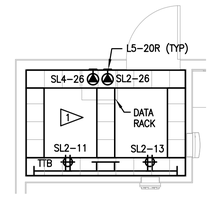

4 / E4.01 IDF ROOM
SCALE: 1/4" = 1'-0"

1/4"=1'-0" 0 1 2 3 4 6 8 12

100% CD SET

REV	ISSUED FOR	DATE

PLAN NORTH | TRUE NORTH
SCALE: 1/8"=1'-0" 0 8'

PSE - OPERATIONAL TRAINING CENTER

ENLARGED PARTIAL PLANS

PROJECT No:	221158
DRAWN BY:	RMF
CHECKED BY:	CJB
DATE ISSUED:	01/26/24

E4.01

© 2022

PRCNC20240216

ALUMINUM FEEDER SCHEDULE

AMPACITY (AMPS)	SYMBOL ID.	FEEDER 3 PHASE, 4 WIRE	RACEWAY	SYMBOL ID.	FEEDER 3 PHASE, 3 WIRE	RACEWAY
70	70	4#2, 1#6 G	1.5"	70N	3#2, 1#6 G	1.5"
80	80	4#1, 1#6 G	1.5"	80N	3#1, 1#6 G	1.5"
100	100	4#1/0, 1#6 G	1.5"	100N	3#1/0, 1#6 G	1.5"
125	125	4#2/0, 1#4 G	2"	125N	3#2/0, 1#4 G	2"
150	150	4#3/0, 1#4 G	2"	150N	3#3/0, 1#4 G	2"
175	175	4#4/0, 1#4 G	2"	175N	3#4/0, 1#4 G	2"
200	200	4#250 kcmil, 1#4 G	2.5"	200N	3#250 kcmil, 1#4 G	2.5"
225	225	4#300 kcmil, 1#2 G	2.5"	225N	3#300 kcmil, 1#2 G	2.5"
250	250	4#350 kcmil, 1#2 G	3"	250N	3#350 kcmil, 1#2 G	3"
300	300	4#500 kcmil, 1#1 G	3"	300N	3#500 kcmil, 1#1 G	3"
400	400	2 SETS 4#250 kcmil, 1#1 G	(2) 2.5"	400N	2 SETS 3#250 kcmil, 1#1 G	(2) 2.5"
500	500	2 SETS 4#350 kcmil, 1#1/0 G	(2) 3"	500N	2 SETS 3#350 kcmil, 1#1/0 G	(2) 3"
600	600	2 SETS 4#500 kcmil, 1#2/0 G	(2) 3"	600N	2 SETS 3#500 kcmil, 1#2/0 G	(2) 3"
800	800	3 SETS 4#400 kcmil. 1#3/0 G	(3) 3"	800N	3 SETS 3#400 kcmil. 1#3/0 G	(3) 3"
1000	1000	3 SETS 4#600 kcmil, 1#4/0 G	(3) 3.5"	1000N	3 SETS 3#600 kcmil, 1#4/0 G	(3) 3"
1200	1200	4 SETS 4#500 kcmil, 1#250 kcmil G	(4) 3"	1200N	4 SETS 3#500 kcmil, 1#250 kcmil G	(4) 3"
1600	1600	5 SETS 4#600 kcmil, 1#350 kcmil G	(5) 3.5"	1600N	5 SETS 3#600 kcmil, 1#350 kcmil G	(5) 3"
2000	2000	6 SETS 4#600 kcmil, 1#400 kcmil G	(6) 3.5"	2000N	6 SETS 3#600 kcmil, 1#400 kcmil G	(6) 3"
2500	2500	7 SETS 4#700 kcmil, 1#600 kcmil G	(7) 4"	2500N	7 SETS 3#700 kcmil, 1#600 kcmil G	(7) 4"
3000	3000	8 SETS 4#700 kcmil, 1#600 kcmil G	(8) 4"	3000N	8 SETS 3#700 kcmil, 1#600 kcmil G	(8) 4"
4000	4000	12 SETS 4#600 kcmil, 1#750 kcmil G	(12) 4"	4000N	12 SETS 3#600 kcmil, 1#750 kcmil G	(12) 4"

NOTES:
1. ALL FEEDERS ARE ALUMINUM WITH THHN/THWN INSULATION, PVC SCHEDULE 40 CONDUIT AND CHAPTER 9
2. FOR FEEDERS WITH AN "SL" SUFFIX, DELETE THE GROUND CONDUCTOR.

TRANSFORMER SCHEDULE

(1) TRANSFORMER kVA	(2) PRIMARY C.B.	(3) PRIMARY FEEDER RACEWAY	(3) PRIMARY FEEDER CONDUCTORS	(4) SECONDARY C.B.	(5) SECONDARY FEEDER RACEWAY	(5) SECONDARY FEEDER CONDUCTORS	(6) GEC	(7) SBJ SSBJ
15	30	3/4"	3#10 & 1#10 G (CU)	50	1	4#6 & 1#10 G (CU)	#8 (CU)	#8 (CU)
30	60	1.25"	3#4 & 1#10 G (CU)	100	1.5"	4#2 & 1#8 G (CU)	#8 (CU)	#8 (CU)
45	80	1.5"	3#2 & 1#8 G (CU)	150	2"	4#3/0 & 1#4 G (AL)	#6 (CU)	#4 (AL)
75	125	1.5"	3#2/0 & 1#4 G (AL)	225	2.5"	4-300 kcmil & 1#1/0 G (AL)	#2 (CU)	#1/0 (AL)
112.5	175	2"	3#4/0 & 1#4 G (AL)	400	(2) 2.5"	(2) 4-250 kcmil & 1#1/0 (AL)	#1/0 (CU)	#1/0 (AL)
150	225	2.5	3-300 kcmil & 1#2 G (AL)	500	(2) 2.5"	(2) 4-350 kcmil & 1#3/0 G (AL)	#1/0 (CU)	#3/0 (AL)
225	400	(2) 2.5"	(2) 3-250 kcmil & 1#1/0 G (AL)	800	(3) 3"	(3) 4-400 kcmil & 1#4/0 G (AL)	#2/0 (CU)	#4/0 (AL)
300	500	(2) 2.5"	(2) 3-350 kcmil & 1#1/0 G (AL)	1000	(3) 3.5"	(3) 4-600 kcmil & 1-250 kcmil G (AL)	#3/0 (CU)	250 kcmil (AL)
500	800	(3) 3"	(3) 3-400 kcmil & 1#3/0 G (AL)	1600	(5) 3.5"	(5) 4-600 kcmil & 1-250 kcmil G (AL)	#3/0 (CU)	400 kcmil (AL)
750	1200	(4) 3"	(4) 3-500 kcmil & 1-250 kcmil (AL)	2500	(7) 4"	(7) 4-750 kcmil & 1-250 kcmil G (AL)	#3/0 (CU)	750 kcmil (AL)
1000	1600	(4) 3"	(4) 3-600 kcmil & 1-350 kcmil (AL)	3500	(10) 4"	(10) 4-750 kcmil & 1-250 kcmil G (AL)	#3/0 (CU)	1000 kcmil (AL)

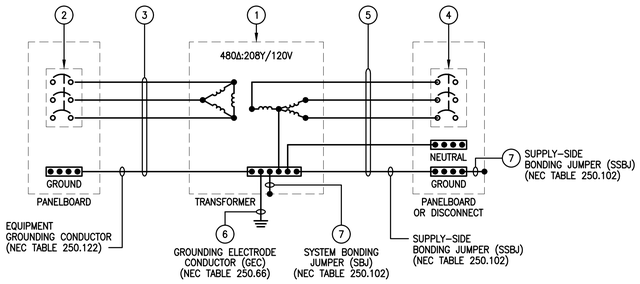

PANEL DESIGNATION

EXAMPLE DESIGNATION: PNL SL1A

BRANCH
N = NORMAL
S = STANDBY NEC-702
E = EMEGENCY NEC-700

VOLTAGE
H = 480Y/277V
L = 208Y/120V

SECTION
A = FIRST SECTION
B = SECOND SECTION

SUFFIX
1 = FIRST IN SEQUENCE
2 = SECOND IN SEQUENCE

ENERGY METERING DESIGNATION

EXAMPLE DESIGNATION: MTR L1

LOAD TYPE
H = HVAC
L = LIGHTING
P = PLUG
PR = PROCESS
S = SERVICE
W = WATER HEATING

SUFFIX
1 = FIRST IN SEQUENCE
2 = SECOND IN SEQUENCE

PV CALCULATIONS

Operational Training Center

On-Site Renewable Energy - C411.1	Building Area SF	Unit Load VA/SF	TCL kVA
Operational Training Center			
On-Site Renewable Energy	30,000	0.50	15.00

GENERAL NOTES

1. REFER TO SHEET E0.02.

FLAG NOTES

1. PROVIDE GUTTER TO SERVE EV CHARGING STATIONS.
2. PROVIDE LEVEL 2 SUPER CRITICAL GRADE SOUND ATTENUATED ENCLOSURE WITH 24-HOUR SKID MOUNT DIESEL FUEL TANK.

OPERATIONAL TRAINING CENTER

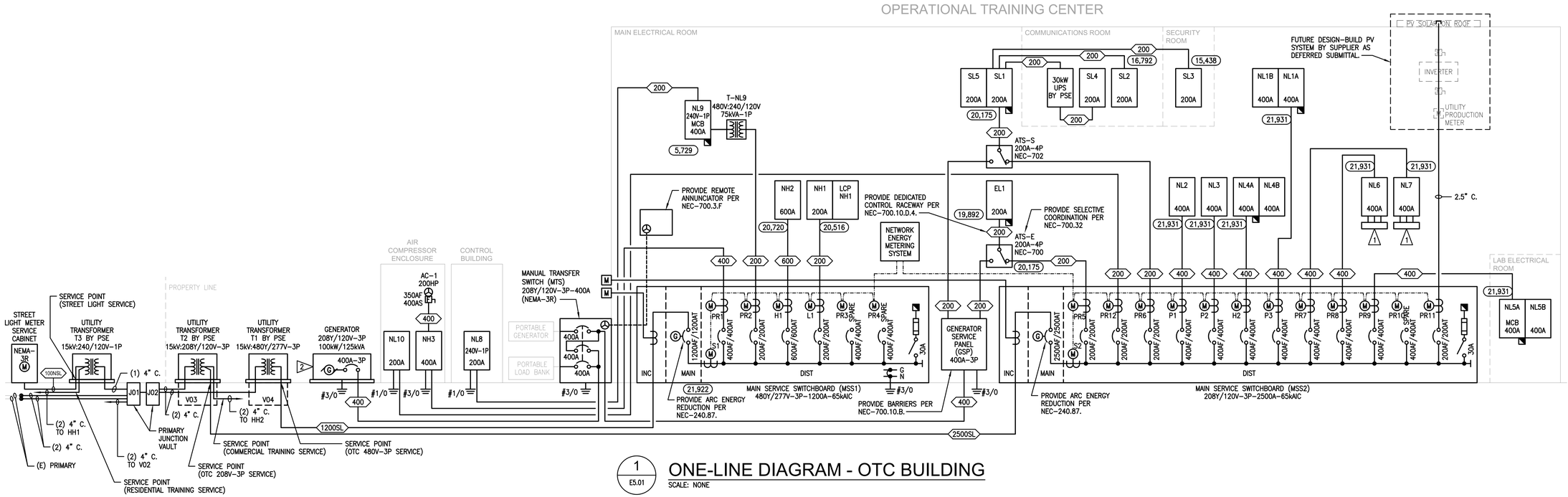

1 E5.01 — ONE-LINE DIAGRAM - OTC BUILDING

SCALE: NONE

ZERVAS
ARCHITECTURE | INTERIOR DESIGN
zervasgroup.com
209 Prospect Street
Bellingham, WA 98225
360.734.4744

COFFMAN ENGINEERS
1101 2nd Avenue,
Suite 400
Seattle, WA 98101
ph 206.623.0717
www.coffman.com

CHRISTOPHER J. BAKKEN — STATE OF WASHINGTON — 31344 — REGISTERED PROFESSIONAL ENGINEER
1/25/2024

City of Puyallup
Development & Permitting Services
ISSUED PERMIT
Building | Planning | Engineering | Public Works | Fire | Traffic

100% CD SET

REV	ISSUED FOR	DATE

SCALE: NONE

PSE - OPERATIONAL TRAINING CENTER

ONE-LINE DIAGRAM

PROJECT No:	221158
DRAWN BY:	RMF
CHECKED BY:	CJB
DATE ISSUED:	01/26/24

E5.01

© 2022

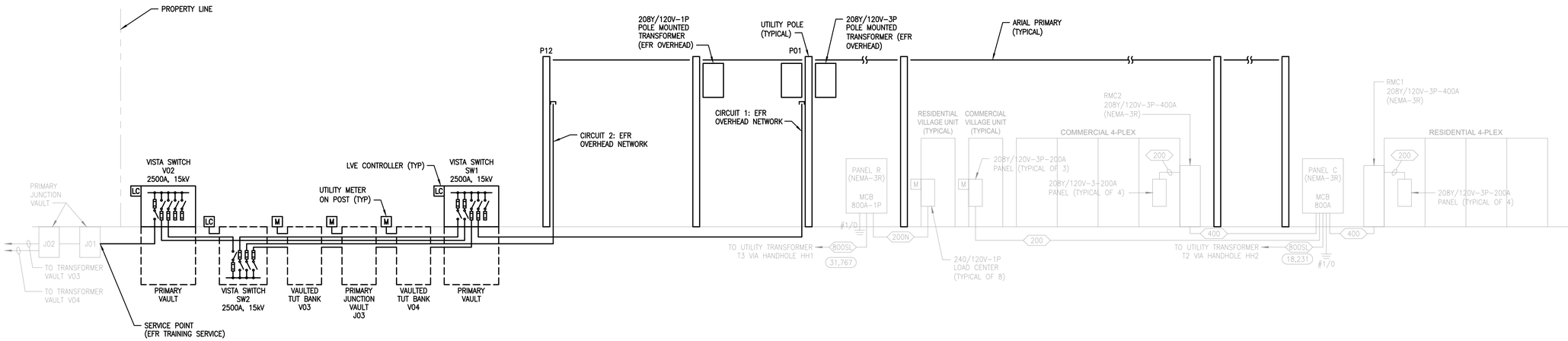

1 E5.02

ONE-LINE DIAGRAM - OUTDOOR TRAINING VILLAGE (EFR TRAINING)

SCALE: NONE

(DESIGN-BUILD BY PSE)

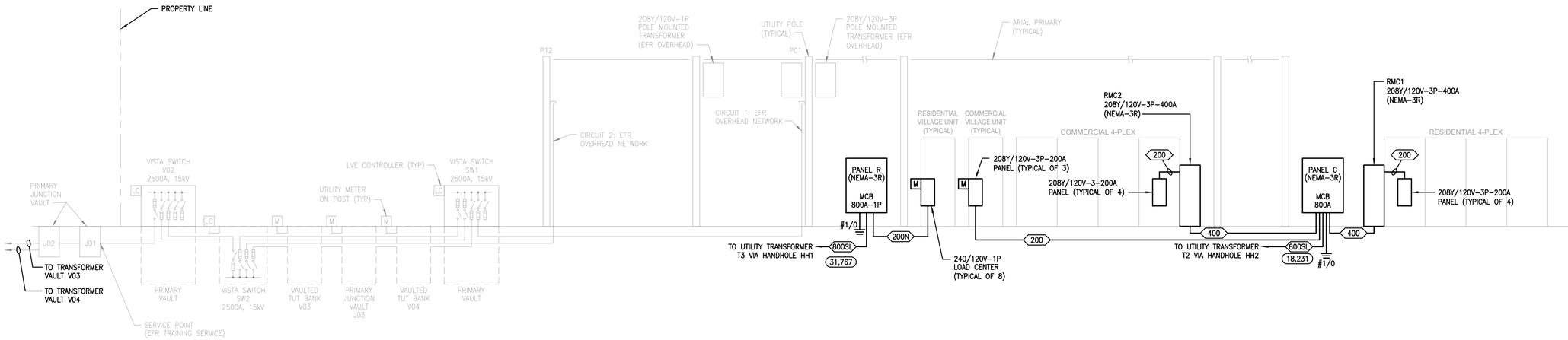

2 E5.02

ONE-LINE DIAGRAM - VILLAGE (CONSTANT POWER)

SCALE: NONE

PRCNC20240216

ZERVAS
ARCHITECTURE | INTERIOR DESIGN
zervasgroup.com
209 Prospect Street
Bellingham, WA 98225
360.734.4744

COFFMAN ENGINEERS
1101 2nd Avenue,
Suite 400
Seattle, WA 98101
ph 206.623.0717
www.coffman.com

CHRISTOPHER J. BAKER, STATE OF WASHINGTON, 31344, REGISTERED PROFESSIONAL ENGINEER
1/25/2024

City of Puyallup
Development & Permitting Services
ISSUED PERMIT
Building | Planning | Engineering | Public Works | Fire | Traffic

100% CD SET

REV	ISSUED FOR	DATE

SCALE: NONE

PSE - OPERATIONAL TRAINING CENTER

ONE-LINE DIAGRAMS

PROJECT No:	221158
DRAWN BY:	RMF
CHECKED BY:	CJB
DATE ISSUED:	01/26/24

E5.02

© 2022

PRCNC20240216

ZERVAS
ARCHITECTURE | INTERIOR DESIGN
zervasgroup.com
209 Prospect Street
Bellingham, WA 98225
360.734.4744

COFFMAN ENGINEERS
1101 2nd Avenue,
Suite 400
Seattle, WA 98101
ph 206.623.0717
www.coffman.com

CHRISTOPHER J. BAKER — STATE OF WASHINGTON — 31344 — REGISTERED PROFESSIONAL ENGINEER
1/25/2024

City of Puyallup
Development & Permitting Services
ISSUED PERMIT
Building | Planning | Engineering | Public Works | Fire | Traffic

PSE OP TRAINING CENTER — PANEL SCHEDULE — NEW PANEL: MSS1

221158

Location: MAIN ELECTRICAL ROOM — Feed Through: — Source: UTILITY

Ckt	Load Description	Phase	Amp	Poles	Notes	Rec.	Ltg.	Kit.	Mtr.	Htg.	Clg.	Cont.	Non.	Total
1	NH3	A	400	3		0.00	0.00	0.00	71.14	0.00	0.00	0.00	0.00	71.14
3	–	B	–	–		0.00	0.00	0.00	71.14	0.00	0.00	0.00	0.00	71.14
5	–	C	–	–		0.00	0.00	0.00	71.14	0.00	0.00	0.00	0.00	71.14
7	NL9	A	200	2		0.72	0.00	0.00	0.75	0.00	0.00	0.00	23.28	24.95
9	–	B	–	–		1.28	0.60	0.00	0.75	0.00	0.00	0.00	23.28	25.89
11	SPACE ONLY	C	–	–										0.00
13	NH2	A	600	3		0.00	0.00	0.00	0.00	112.46	0.00	0.00	0.00	112.46
15	–	B	–	–		0.00	0.00	0.00	0.00	112.46	0.00	0.00	0.00	112.46
17	–	C	–	–		0.00	0.00	0.00	0.00	112.46	0.00	0.00	0.00	112.46
19	NH1	A	200	3		0.00	0.00	0.00	0.00	0.00	0.00	0.00	12.19	12.19
21	–	B	–	–		0.00	0.00	0.00	3.88	0.00	0.00	0.00	0.00	3.88
23	–	C	–	–		0.00	0.00	0.00	0.00	0.00	0.00	0.00	0.00	0.00
25		A												0.00
27		B												0.00
29		C												0.00
31		A												0.00
33		B												0.00
35		C												0.00
37		A												0.00
39		B												0.00
41		C												0.00
2	SPARE C.B.	A	400	3										0.00
4	–	B	–	–										0.00
6	–	C	–	–										0.00
8	SPARE C.B.	A	400	3										0.00
10	–	B	–	–										0.00
12	–	C	–	–										0.00
14	SPACE ONLY	A	–	–										0.00
16	–	B	–	–										0.00
18	–	C	–	–										0.00
20	SPD	A	30	3										0.00
22	–	B	–	–										0.00
24	–	C	–	–										0.00
26		A												0.00
28		B												0.00
30		C												0.00
32		A												0.00
34		B												0.00
36		C												0.00
38														0.00
40														0.00
42														0.00

Specifications

Rating (Amps):	1200
Voltage (L-L):	480
Phase:	3
Wire:	4
Bus Material:	Cu
Int. Rating:	65,000A
Main Lugs Only:	–
Main Ckt Brkr:	1200 A
Surface Mtd:	X
Flush Mtd:	–
Bonded Gnd:	X
Isolated Gnd:	–
200% Neutral:	–
Feed Thru:	–
Double Lug:	–
Top Feed:	–
Bottom Feed	–

Feed Thru Load:	NONE
Phase A:	0.00
Phase B:	0.00
Phase C:	0.00
Total Conn.:	0.00
Load From This Panel:	
Phase A:	220.74
Phase B:	213.37
Phase C:	183.60
Total Conn.:	617.70
Total Connected Load:	
Phase A:	220.74
Phase B:	213.37
Phase C:	183.60
Total Conn.:	617.70
Total Feeder Demand Load:	
Total:	667.76 kva
Avg. Amps/Phase:	803 A.

CATEGORY	TOTAL CONN. LOAD (kva)	DEMAND FACTOR	DEMAND LOAD (kva)
Receptacles	1.88	50%>10kva	1.88
Lighting	0.80	125%	1.00
Kitchen Equipment	0.00	NEC 220.56	0.00
Motors (Largest)	199.44	125%	249.30
Motors	19.36	100%	19.36
Heating	337.38	NEC 220.60	337.38
Cooling	0.00	NEC 220.60	0.00
Continuous Load	0.00	125%	0.00
Non-Continuous Load	58.75	100%	58.75
TOTAL	617.70		667.76

General Notes:

1. SERVICE ENTRANCE RATED.

Keyed Notes:

COFFMAN ENGINEERS, INC.

PSE OP TRAINING CENTER — PANEL SCHEDULE — NEW PANEL: NH1

221158

Location: MAIN ELECTRICAL ROOM — Feed Through: — Source: MSS1

Ckt	Load Description	Phase	Amp	Poles	Notes	Rec.	Ltg.	Kit.	Mtr.	Htg.	Clg.	Cont.	Non.	Total
1	SPARE C.B.	A	20	1										0.00
3	SPARE C.B.	B	20	1										0.00
5	SPARE C.B.	C	20	1										0.00
7	SPARE C.B.	A	20	1										0.00
9	SPARE C.B.	B	20	1										0.00
11	SPARE C.B.	C	20	1										0.00
13	SPARE C.B.	A	20	1										0.00
15	SPARE C.B.	B	20	1										0.00
17	SPARE C.B.	C	20	1										0.00
19	SPARE C.B.	A	20	1										0.00
21	SPARE C.B.	B	20	1										0.00
23	SPARE C.B.	C	20	1										0.00
25	SPARE C.B.	A	20	1										0.00
27	SPARE C.B.	B	20	1										0.00
29	SPARE C.B.	C	20	1										0.00
31	SPARE C.B.	A	20	1										0.00
33	SPARE C.B.	B	20	1										0.00
35	SPARE C.B.	C	20	1										0.00
37	SPARE C.B.	A	20	1										0.00
39	SPARE C.B.	B	20	1										0.00
41	SPARE C.B.	C	20	1										0.00
2	SPARE C.B.	A	20	1										0.00
4	SPARE C.B.	B	20	1										0.00
6	SPARE C.B.	C	20	1										0.00
8	SPARE C.B.	A	20	1										0.00
10	SPARE C.B.	B	20	1										0.00
12	SPARE C.B.	C	20	1										0.00
14	SPARE C.B.	A	20	1										0.00
16	SPARE C.B.	B	20	1										0.00
18	SPARE C.B.	C	20	1										0.00
20	SPARE C.B.	A	20	1										0.00
22	SPARE C.B.	B	20	1										0.00
24	SPARE C.B.	C	20	1										0.00
26	SPARE C.B.	A	20	1										0.00
28	SPARE C.B.	B	20	1										0.00
30	SPARE C.B.	C	20	1										0.00
32	SPARE C.B.	A	20	1										0.00
34	SPARE C.B.	B	20	1										0.00
36	SPARE C.B.	C	20	1										0.00
38	EWH-1	A	60	1									12.19	12.19
40	WH2-1	B	20	1					3.88					3.88
42	SPARE C.B.	C	20	1										0.00

Specifications

Rating (Amps):	200
Voltage (L-L):	480
Phase:	3
Wire:	4
Bus Material:	Cu
Int. Rating:	35,000A
Main Lugs Only:	X
Main Ckt Brkr:	–
Surface Mtd:	–
Flush Mtd:	–
Bonded Gnd:	–
Isolated Gnd:	–
200% Neutral:	–
Feed Thru:	–
Double Lug:	–
Top Feed:	–
Bottom Feed	–

Feed Thru Load:	NONE
Phase A:	0.00
Phase B:	0.00
Phase C:	0.00
Total Conn.:	0.00
Load From This Panel:	
Phase A:	12.19
Phase B:	3.88
Phase C:	0.00
Total Conn.:	16.07
Total Connected Load:	
Phase A:	12.19
Phase B:	3.88
Phase C:	0.00
Total Conn.:	16.07
Total Feeder Demand Load:	
Total:	17.04 kva
Avg. Amps/Phase:	20 A.

CATEGORY	TOTAL CONN. LOAD (kva)	DEMAND FACTOR	DEMAND LOAD (kva)
Receptacles	0.00	50%>10kva	0.00
Lighting	0.00	125%	0.00
Kitchen Equipment	0.00	NEC 220.56	0.00
Motors (Largest)	3.88	125%	4.85
Motors	0.00	100%	0.00
Heating	0.00	NEC 220.60	0.00
Cooling	0.00	NEC 220.60	0.00
Continuous Load	0.00	125%	0.00
Non-Continuous Load	12.19	100%	12.19
TOTAL	16.07		17.04

General Notes:

Keyed Notes:

COFFMAN ENGINEERS, INC.

PSE OP TRAINING CENTER — PANEL SCHEDULE — NEW PANEL: NH2

221158

Location: MAIN ELECTRICAL ROOM — Feed Through: — Source: MSS1

Ckt	Load Description	Phase	Amp	Poles	Notes	Rec.	Ltg.	Kit.	Mtr.	Htg.	Clg.	Cont.	Non.	Total
1	DOAS-R-01	A	100	3					23.83					23.83
3	–	B	–	–					23.83					23.83
5	–	C	–	–					23.83					23.83
7	CU-R-01A	A	20	3					3.88					3.88
9	–	B	–	–					3.88					3.88
11	–	C	–	–					3.88					3.88
13	CU-R-01B	A	20	3					3.88					3.88
15	–	B	–	–					3.88					3.88
17	–	C	–	–					3.88					3.88
19	CU-R-02A	A	20	3					3.88					3.88
21	–	B	–	–					3.88					3.88
23	–	C	–	–					3.88					3.88
25	CU-R-02B	A	20	3					3.88					3.88
27	–	B	–	–					3.88					3.88
29	–	C	–	–					3.88					3.88
31	CU-R-03A	A	40	3					9.15					9.15
33	–	B	–	–					9.15					9.15
35	–	C	–	–					9.15					9.15
37	CU-R-03B	A	40	3					9.15					9.15
39	–	B	–	–					9.15					9.15
41	–	C	–	–					9.15					9.15
2	CU-R-04A	A	40	3					9.15					9.15
4	–	B	–	–					9.15					9.15
6	–	C	–	–					9.15					9.15
8	CU-R-04B	A	40	3					9.15					9.15
10	–	B	–	–					9.15					9.15
12	–	C	–	–					9.15					9.15
14	CU-R-05	A	20	3					3.88					3.88
16	–	B	–	–					3.88					3.88
18	–	C	–	–					3.88					3.88
20	CU-06-01	A	20	3					3.88					3.88
22	–	B	–	–					3.88					3.88
24	–	C	–	–					3.88					3.88
26	MAU-R-01	A	125	3					28.77					28.77
28	–	B	–	–					28.77					28.77
30	–	C	–	–					28.77					28.77
32	SPARE C.B.	A	20	3										0.00
34	–	B	–	–										0.00
36	–	C	–	–										0.00
38	SPARE C.B.	A	20	3										0.00
40	–	B	–	–										0.00
42	–	C	–	–										0.00

Specifications

Rating (Amps):	600
Voltage (L-L):	480
Phase:	3
Wire:	4
Bus Material:	Cu
Int. Rating:	35,000A
Main Lugs Only:	X
Main Ckt Brkr:	–
Surface Mtd:	X
Flush Mtd:	–
Bonded Gnd:	–
Isolated Gnd:	–
200% Neutral:	–
Feed Thru:	–
Double Lug:	–
Top Feed:	–
Bottom Feed	–

Feed Thru Load:	NONE
Phase A:	0.00
Phase B:	0.00
Phase C:	0.00
Total Conn.:	0.00
Load From This Panel:	
Phase A:	112.46
Phase B:	112.46
Phase C:	112.46
Total Conn.:	337.38
Total Connected Load:	
Phase A:	112.46
Phase B:	112.46
Phase C:	112.46
Total Conn.:	337.38
Total Feeder Demand Load:	
Total:	337.38 kva
Avg. Amps/Phase:	406 A.

CATEGORY	TOTAL CONN. LOAD (kva)	DEMAND FACTOR	DEMAND LOAD (kva)
Receptacles	0.00	50%>10kva	0.00
Lighting	0.00	125%	0.00
Kitchen Equipment	0.00	NEC 220.56	0.00
Motors (Largest)	0.00	125%	0.00
Motors	0.00	100%	0.00
Heating	337.38	NEC 220.60	337.38
Cooling	0.00	NEC 220.60	0.00
Continuous Load	0.00	125%	0.00
Non-Continuous Load	0.00	100%	0.00
TOTAL	337.38		337.38

General Notes:

Keyed Notes:

COFFMAN ENGINEERS, INC.

PSE OP TRAINING CENTER — PANEL SCHEDULE — NEW PANEL: NH3

221158

Location: COMPRESSOR BUILDING — Feed Through: — Source: MSS1

Ckt	Load Description	Phase	Amp	Poles	Notes	Rec.	Ltg.	Kit.	Mtr.	Htg.	Clg.	Cont.	Non.	Total
1	AC-1 (200HP)	A	400	3	1				66.48					66.48
3	–	B	–	–					66.48					66.48
5	–	C	–	–					66.48					66.48
7	CAD-1	A	20	3					2.00					2.00
9	–	B	–	–					2.00					2.00
11	–	C	–	–					2.00					2.00
13		A												0.00
15		B												0.00
17		C												0.00
19		A												0.00
21		B												0.00
23		C												0.00
25		A												0.00
27		B												0.00
29		C												0.00
31		A												0.00
33		B												0.00
35		C												0.00
37		A												0.00
39		B												0.00
41		C												0.00
2	SF-06-01	A	20	3					1.33					1.33
4	–	B	–	–					1.33					1.33
6	–	C	–	–					1.33					1.33
8	SF-06-02	A	20	3					1.33					1.33
10	–	B	–	–					1.33					1.33
12	–	C	–	–					1.33					1.33
14		A												0.00
16		B												0.00
18		C												0.00
20		A												0.00
22		B												0.00
24		C												0.00
26		A												0.00
28		B												0.00
30		C												0.00
32		A												0.00
34		B												0.00
36		C												0.00
38		A												0.00
40		B												0.00
42		C												0.00

Specifications

Rating (Amps):	400
Voltage (L-L):	480
Phase:	3
Wire:	4
Bus Material:	Cu
Int. Rating:	35,000A
Main Lugs Only:	X
Main Ckt Brkr:	–
Surface Mtd:	X
Flush Mtd:	–
Bonded Gnd:	X
Isolated Gnd:	–
200% Neutral:	–
Feed Thru:	–
Double Lug:	–
Top Feed:	–
Bottom Feed	–

Feed Thru Load:	NONE
Phase A:	0.00
Phase B:	0.00
Phase C:	0.00
Total Conn.:	0.00
Load From This Panel:	
Phase A:	71.14
Phase B:	71.14
Phase C:	71.14
Total Conn.:	213.42
Total Connected Load:	
Phase A:	71.14
Phase B:	71.14
Phase C:	71.14
Total Conn.:	213.42
Total Feeder Demand Load:	
Total:	263.28 kva
Avg. Amps/Phase:	317 A.

CATEGORY	TOTAL CONN. LOAD (kva)	DEMAND FACTOR	DEMAND LOAD (kva)
Receptacles	0.00	50%>10kva	0.00
Lighting	0.00	125%	0.00
Kitchen Equipment	0.00	NEC 220.56	0.00
Motors (Largest)	199.44	125%	249.30
Motors	13.98	100%	13.98
Heating	0.00	NEC 220.60	0.00
Cooling	0.00	NEC 220.60	0.00
Continuous Load	0.00	125%	0.00
Non-Continuous Load	0.00	100%	0.00
TOTAL	213.42		263.28

General Notes:

1. SERVICE ENTRANCE RATED.

Keyed Notes:

1. PROVIDE FEED THRU LUGS TO SERVE AC-1.

COFFMAN ENGINEERS, INC.

PSE OP TRAINING CENTER — PANEL SCHEDULE — NEW PANEL: MSS2

221158

Location: MAIN ELECTRICAL ROOM — Feed Through: — Source: UTILITY

Ckt	Load Description	Phase	Amp	Poles	Notes	Rec.	Ltg.	Kit.	Mtr.	Htg.	Clg.	Cont.	Non.	Total
1	EL1	A	200	3		0.18	3.10	0.00	2.00	0.00	0.00	0.00	0.72	6.00
3	–	B	–	–		0.00	3.00	0.00	2.00	0.00	0.00	0.00	0.60	5.60
5	–	C	–	–		0.00	2.00	0.00	2.00	0.00	0.00	0.00	0.24	4.24
7	SL1	A	200	3		0.36	5.00	0.00	6.32	0.00	0.00	0.00	5.07	16.75
9	–	B	–	–		0.36	5.00	0.00	6.43	0.00	0.00	0.00	4.28	16.07
11	–	C	–	–		0.72	4.40	0.00	6.12	0.00	0.00	0.00	4.07	15.31
13	NL2	A	400	3		0.00	0.00	0.00	0.00	0.00	0.00	0.00	1.20	1.20
15	–	B	–	–		0.00	0.00	0.00	0.00	0.00	0.00	0.00	1.20	1.20
17	–	C	–	–		0.00	0.00	0.00	0.00	0.00	0.00	0.00	1.20	1.20
19	NL3	A	400	3		3.06	0.00	0.00	0.00	0.00	0.00	0.00	2.00	5.06
21	–	B	–	–		2.34	0.00	0.00	0.00	0.00	0.00	0.00	2.30	4.64
23	–	C	–	–		1.98	0.00	0.00	0.00	0.00	0.00	0.00	2.30	4.28
25	NL4A	A	400	3		0.00	0.00	0.00	26.83	0.00	0.00	0.00	0.00	26.83
27	–	B	–	–		0.00	0.00	0.00	22.22	0.00	0.00	0.00	0.58	22.80
29	–	C	–	–		0.00	0.00	0.00	20.30	0.00	0.00	0.00	0.50	20.80
31	NL1A	A	400	3		9.00	0.00	0.00	0.00	0.00	0.00	0.00	1.00	10.00
33	–	B	–	–		8.46	0.00	0.00	0.00	0.00	0.00	0.00	1.50	9.96
35	–	C	–	–		6.84	0.00	0.00	0.00	0.00	0.00	0.00	3.00	9.84
37		A												0.00
39		B												0.00
41		C												0.00
2	NL6	A	400	3		0.00	0.00	0.00	0.00	0.00	0.00	16.64	0.00	16.64
4	–	B	–	–		0.00	0.00	0.00	0.00	0.00	0.00	16.64	0.00	16.64
6	–	C	–	–		0.00	0.00	0.00	0.00	0.00	0.00	13.31	0.00	13.31
8	NL7	A	400	3		0.00	0.00	0.00	0.00	0.00	0.00	0.00	0.00	0.00
10	–	B	–	–		0.00	0.00	0.00	0.00	0.00	0.00	0.00	0.00	0.00
12	–	C	–	–		0.00	0.00	0.00	0.00	0.00	0.00	0.00	0.00	0.00
14	NL5A	A	400	3		6.12	0.10	0.00	0.00	0.00	0.00	2.22	8.44	16.88
16	–	B	–	–		6.57	0.00	0.00	0.00	0.00	0.00	2.92	9.49	19.00
18	–	C	–	–		6.57	0.00	0.00	0.00	0.00	0.00	3.22	9.79	19.58
20	NL10	A	200	3		0.00	0.10	0.00	0.00	0.00	0.00	0.00	0.10	0.20
22	–	B	–	–		0.36	0.00	0.00	0.00	0.00	0.00	0.00	0.36	0.72
24	–	C	–	–		0.00	0.10	0.00	0.00	0.00	0.00	0.00	0.10	0.20
26	SPARE C.B.	A	400	3										0.00
28	–	B	–	–										0.00
30	–	C	–	–										0.00
32	PV SYSTEM (FUTURE)	A	200	3										0.00
34	–	B	–	–										0.00
36	–	C	–	–										0.00
38	SPD	A	30	3										0.00
40	–	B	–	–										0.00
42	–	C	–	–										0.00

Specifications

Rating (Amps):	2500
Voltage (L-L):	208
Phase:	3
Wire:	4
Bus Material:	Cu
Int. Rating:	65,000A
Main Lugs Only:	–
Main Ckt Brkr:	2500 A
Surface Mtd:	X
Flush Mtd:	–
Bonded Gnd:	X
Isolated Gnd:	–
200% Neutral:	–
Feed Thru:	–
Double Lug:	–
Top Feed:	–
Bottom Feed	–

Feed Thru Load:	NONE
Phase A:	0.00
Phase B:	0.00
Phase C:	0.00
Total Conn.:	0.00
Load From This Panel:	
Phase A:	91.13
Phase B:	86.76
Phase C:	78.88
Total Conn.:	256.77
Total Connected Load:	
Phase A:	91.13
Phase B:	86.76
Phase C:	78.88
Total Conn.:	256.77
Total Feeder Demand Load:	
Total:	256.82 kva
Avg. Amps/Phase:	713 A.

CATEGORY	TOTAL CONN. LOAD (kva)	DEMAND FACTOR	DEMAND LOAD (kva)
Receptacles	52.92	50%>10kva	31.46
Lighting	22.80	125%	28.50
Kitchen Equipment	0.00	NEC 220.56	0.00
Motors (Largest)	16.64	125%	20.81
Motors	77.69	100%	77.69
Heating	0.00	NEC 220.60	0.00
Cooling	0.00	NEC 220.60	0.00
Continuous Load	46.59	125%	58.24
Non-Continuous Load	40.12	100%	40.12
TOTAL	256.77		256.82

General Notes:

1. SERVICE ENTRANCE RATED.

Keyed Notes:

COFFMAN ENGINEERS, INC.

PSE OP TRAINING CENTER — PANEL SCHEDULE — NEW PANEL: GSP

221158

Location: MAIN ELECTRICAL ROOM — Feed Through: — Source: GENERATOR

Ckt	Load Description	Phase	Amp	Poles	Notes	Rec.	Ltg.	Kit.	Mtr.	Htg.	Clg.	Cont.	Non.	Total
1	EL1	A	200	3		0.18	3.10	0.00	2.00	0.00	0.00	0.00	0.72	6.00
3	–	B	–	–		0.00	3.00	0.00	2.00	0.00	0.00	0.00	0.60	5.60
5	–	C	–	–		0.00	2.00	0.00	2.00	0.00	0.00	0.00	0.24	4.24
7	SPARE C.B.	A	200	3										0.00
9	–	B	–	–										0.00
11	–	C	–	–										0.00
13		A												0.00
15		B												0.00
17		C												0.00
19		A												0.00
21		B												0.00
23		C												0.00
25		A												0.00
27		B												0.00
29		C												0.00
31		A												0.00
33		B												0.00
35		C												0.00
37		A												0.00
39		B												0.00
41		C												0.00
2	SL1	A	200	3		0.36	5.00	0.00	6.32	0.00	0.00	0.00	5.07	16.75
4	–	B	–	–		0.36	5.00	0.00	6.43	0.00	0.00	0.00	4.28	16.07
6	–	C	–	–		0.72	4.40	0.00	6.12	0.00	0.00	0.00	4.07	15.31
8	SPD	A	30	3										0.00
10	–	B	–	–										0.00
12	–	C	–	–										0.00
14		A												0.00
16		B												0.00
18		C												0.00
20		A												0.00
22		B												0.00
24		C												0.00
26		A												0.00
28		B												0.00
30		C												0.00
32		A												0.00
34		B												0.00
36		C												0.00
38		A												0.00
40		B												0.00
42		C												0.00

Specifications

Rating (Amps):	400
Voltage (L-L):	208
Phase:	3
Wire:	4
Bus Material:	Cu
Int. Rating:	22,000A
Main Lugs Only:	X
Main Ckt Brkr:	–

PRCNC20240216

ZERVAS
ARCHITECTURE | INTERIOR DESIGN
zervasgroup.com
209 Prospect Street
Bellingham, WA 98225
360.734.4744

COFFMAN ENGINEERS
1101 2nd Avenue,
Suite 400
Seattle, WA 98101
ph 206.623.0717
www.coffman.com

CHRISTOPHER J. BAKER — STATE OF WASHINGTON — 31344 — REGISTERED PROFESSIONAL ENGINEER
1/25/2024

City of Puyallup
Development & Permitting Services
ISSUED PERMIT
Building | Planning | Engineering | Public Works | Fire | Traffic

PSE OP TRAINING CENTER — PANEL SCHEDULE — NEW PANEL: EL1

221158

Location: MAIN ELECTRICAL ROOM — Feed Through: — Source: GSD

Ckt	Load Description	Phase	Amp	Poles	Notes	Rec.	Ltg.	Kit.	Mtr.	Htg.	Clg.	Cont.	Non.	Total
1	EM LTG – CORRIDORS	A	20	1			1.00							1.00
3	EM LTG – ELECTRIC OPERATIONS	B	20	1			1.00							1.00
5	EM LTG – CLASSROOMS	C	20	1			1.00							1.00
7	EM LTG – CORRIDORS	A	20	1			1.00							1.00
9	EM LTG – GAS OP, FLOW, FITTING	B	20	1			1.00							1.00
11	EM LTG – APPLIANCE LAB	C	20	1			1.00							1.00
13	EM LTG – OPEN OFFICE, BREAK	A	20	1			1.00							1.00
15	EM LTG – COVERED	B	20	1			1.00							1.00
17	SPARE C.B.	C	20	1										0.00
19	DRY SPRINKLER AIR COMPRESSOR	A	30	3					2.00					2.00
21	–	B	–	–					2.00					2.00
23	–	C	–	–					2.00					2.00
25	SPARE C.B.	A	20	1										0.00
27	SPARE C.B.	B	20	1										0.00
29	SPARE C.B.	C	20	1										0.00
31	SPARE C.B.	A	20	1										0.00
33	SPARE C.B.	B	20	1										0.00
35	SPARE C.B.	C	20	1										0.00
37	SPARE C.B.	A	20	1										0.00
39	SPARE C.B.	B	20	1										0.00
41	SPARE C.B.	C	20	1										0.00
2	FIRE ALARM PANEL	A	20	1									0.10	0.10
4	FIRE ALARM ANNUNCIATOR	B	20	1									0.10	0.10
6	GENERATOR ANNUNCIATOR	C	20	1										0.00
8	GENERATOR BLOCK HEATER	A	20	1									0.50	0.50
10	–	B	20	1									0.50	0.50
12	GENERATOR BATTERY CHARGER	C	20	1									0.24	0.24
14	GENERATOR CONT, LTG, RECEPT	A	20	1		0.18	0.10						0.12	0.40
16	SPARE C.B.	B	20	1										0.00
18	SPARE C.B.	C	20	1										0.00
20	SPARE C.B.	A	20	1										0.00
22	SPARE C.B.	B	20	1										0.00
24	SPARE C.B.	C	20	1										0.00
26	SPARE C.B.	A	20	1										0.00
28	SPARE C.B.	B	20	1										0.00
30	SPARE C.B.	C	20	1										0.00
32	SPARE C.B.	A	20	1										0.00
34	SPARE C.B.	B	20	1										0.00
36	SPARE C.B.	C	20	1										0.00
38	SPD	A	20	3										0.00
40	–	B	–	–										0.00
42	–	C	–	–										0.00

Specifications:
Rating (Amps): 200
Voltage (L–L): 208
Phase: 3
Wire: 4
Bus Material: Cu
Int. Rating: 22,000A
Main Lugs Only: X
Main Ckt Brkr: –
Surface Mtd: X
Flush Mtd: –
Bonded Gnd: –
Isolated Gnd: –
200% Neutral: –
Feed Thru: –
Double Lug: –
Top Feed: –
Bottom Feed –

Feed Thru Load: NONE
Phase A: 0.00
Phase B: 0.00
Phase C: 0.00
Total Conn.: 0.00
Load From This Panel:
Phase A: 6.00
Phase B: 5.60
Phase C: 4.24
Total Conn.: 15.85
Total Connected Load:
Phase A: 6.00
Phase B: 5.60
Phase C: 4.24
Total Conn.: 15.85
Total Feeder Demand Load:
Total: 19.38 kva
Avg. Amps/Phase: 54 A.

CATEGORY	TOTAL CONN. LOAD (kVA)	DEMAND FACTOR	DEMAND LOAD (kVA)
Receptacles	0.18	50%>10kVA	0.18
Lighting	8.10	125%	10.13
Kitchen Equipment	0.00	NEC 220.56	0.00
Motors (Largest)	6.01	125%	7.52
Motors	0.00	100%	0.00
Heating	0.00	NEC 220.60	0.00
Cooling	0.00	NEC 220.60	0.00
Continuous Load	0.00	125%	0.00
Non-Continuous Load	1.56	100%	1.56
TOTAL	15.85		19.38

General Notes:

Keyed Notes:

COFFMAN ENGINEERS, INC.

PSE OP TRAINING CENTER — PANEL SCHEDULE — NEW PANEL: SL1

221158

Location: — Feed Through: SL5 — Source: GSD

Ckt	Load Description	Phase	Amp	Poles	Notes	Rec.	Ltg.	Kit.	Mtr.	Htg.	Clg.	Cont.	Non.	Total
1	SL2	A	200	3		0.00	0.00	0.00	0.21	0.00	0.00	0.00	1.40	1.61
3	–	B	–	–		0.00	0.00	0.00	0.21	0.00	0.00	0.00	1.20	1.41
5	–	C	–	–		0.18	0.00	0.00	0.00	0.00	0.00	0.00	1.00	1.18
7	SL3	A	200	3		0.00	0.00	0.00	0.10	0.00	0.00	0.00	0.60	0.70
9	–	B	–	–		0.00	0.00	0.00	0.10	0.00	0.00	0.00	0.60	0.70
11	–	C	–	–		0.18	0.00	0.00	0.00	0.00	0.00	0.00	0.40	0.58
13	SPARE C.B.	A	30	3										0.00
15	–	B	–	–										0.00
17	–	C	–	–										0.00
19	LTG – ELECTRIC OPERATIONS	A	20	1			1.00							1.00
21	LTG – CLASSROOMS	B	20	1			1.00							1.00
23	LTG – GAS OP TRAINING, LAB	C	20	1			1.00							1.00
25	LTG – FLOW LAB, FITTING	A	20	1			1.00							1.00
27	LTG – WAREHOUSE	B	20	1			1.00							1.00
29	LTG – APPLIANCE LAB	C	20	1			1.00							1.00
31	LTG – OPEN OFFICE, RESTROOMS	A	20	1			1.00							1.00
33	LTG – BREAK, ELEC, MECH, COMM	B	20	1			1.00							1.00
35	LTG – COVERED	C	20	1			1.00							1.00
37	LTG – COVERED	A	20	1			1.00							1.00
39	LTG – OPEN OFF/WORK RM	B	20	1			1.00							1.00
41	SPARE C.B.	C	20	1										0.00
2	LTG – PARKING LOT POLE LIGHTS	A	20	1			1.00							1.00
4	LTG – BUILDING MOUNTED LIGHTS	B	20	1			1.00							1.00
6	LTG – OTC POLE LIGHTS	C	20	1			1.40							1.40
8	SPARE C.B.	A	20	1										0.00
10	SPARE C.B.	B	20	1										0.00
12	REFRIGERATOR – BREAK	C	20	1									0.67	0.67
14	REFRIGERATOR – BREAK	A	20	1									0.67	0.67
16	AUTO DOOR – VESTIBULE	B	20	1									0.50	0.50
18	DDC CONTROL PANEL	C	20	1									0.20	0.20
20	FLUSH VALVES	A	20	1									0.20	0.20
22	HOT BOX HEAT TRACE	B	20	1	1								0.18	0.18
24	LIGHTING CONTROL PANEL	C	20	1									0.20	0.20
26	INTERCOM SYSTEM	A	20	1									0.20	0.20
28	SFCU–03–01	B	20	2					0.10					0.10
30	–	C	–	–					0.10					0.10
32	SL4	A	200	3		0.00	0.00	0.00	0.00	0.00	0.00	0.00	1.60	1.60
34	–	B	–	–		0.00	0.00	0.00	0.00	0.00	0.00	0.00	1.40	1.40
36	–	C	–	–		0.00	0.00	0.00	0.00	0.00	0.00	0.00	1.20	1.20
38	SPARE C.B.	A	20	3										0.00
40	SPARE C.B.	B	20	1										0.00
42	SPARE C.B.	C	20	1										0.00

Specifications:
Rating (Amps): 200
Voltage (L–L): 208
Phase: 3
Wire: 4
Bus Material: Cu
Int. Rating: 22,000A
Main Lugs Only: X
Main Ckt Brkr: –
Surface Mtd: X
Flush Mtd: –
Bonded Gnd: –
Isolated Gnd: –
200% Neutral: –
Feed Thru: X
Double Lug: –
Top Feed: –
Bottom Feed –

Feed Thru Load: SL5
Phase A: 6.77
Phase B: 6.77
Phase C: 6.77
Total Conn.: 20.32
Load From This Panel:
Phase A: 9.98
Phase B: 9.30
Phase C: 8.53
Total Conn.: 27.81
Total Connected Load:
Phase A: 16.75
Phase B: 16.07
Phase C: 15.31
Total Conn.: 48.13
Total Feeder Demand Load:
Total: 53.23 kva
Avg. Amps/Phase: 148 A.

CATEGORY	TOTAL CONN. LOAD (kVA)	DEMAND FACTOR	DEMAND LOAD (kVA)
Receptacles	1.44	50%>10kVA	1.44
Lighting	14.40	125%	18.00
Kitchen Equipment	0.00	NEC 220.56	0.00
Motors (Largest)	6.01	125%	7.52
Motors	12.86	100%	12.86
Heating	0.00	NEC 220.60	0.00
Cooling	0.00	NEC 220.60	0.00
Continuous Load	0.00	125%	0.00
Non-Continuous Load	13.42	100%	13.42
TOTAL	48.13		53.23

General Notes:

Keyed Notes:

1. PROVIDE GFPE CIRCUIT BREAKER.

COFFMAN ENGINEERS, INC.

PSE OP TRAINING CENTER — PANEL SCHEDULE — NEW PANEL: SL2

221158

Location: COMMUNICATIONS ROOM — Feed Through: — Source: SL1

Ckt	Load Description	Phase	Amp	Poles	Notes	Rec.	Ltg.	Kit.	Mtr.	Htg.	Clg.	Cont.	Non.	Total
1	SFCU–01–01	A	20	2					0.21					0.21
3	–	B	–	–					0.21					0.21
5	RECEPT	C	20	1		0.18								0.18
7	RECEPT – COMM TTB	A	20	1									0.20	0.20
9	RECEPT – COMM TTB	B	20	1									0.20	0.20
11	RECEPT – IDF TTB	C	20	1									0.20	0.20
13	RECEPT – IDF TTB	A	20	1									0.20	0.20
15	RECEPT – LAB TTB	B	20	1									0.20	0.20
17	SPARE C.B.	C	20	1										0.00
19	SPARE C.B.	A	20	1										0.00
21	SPARE C.B.	B	20	1										0.00
23	SPARE C.B.	C	20	1										0.00
25	SPARE C.B.	A	20	1										0.00
27	SPARE C.B.	B	20	1										0.00
29	SPARE C.B.	C	20	1										0.00
31	SPARE C.B.	A	20	1										0.00
33	SPARE C.B.	B	20	1										0.00
35	SPARE C.B.	C	20	1										0.00
37	SPARE C.B.	A	20	1										0.00
39	SPARE C.B.	B	20	1										0.00
41	SPARE C.B.	C	20	1										0.00
2	RECEPT – DATA RACK	A	20	1									0.20	0.20
4	RECEPT – DATA RACK	B	20	1									0.20	0.20
6	RECEPT – DATA RACK	C	20	1									0.20	0.20
8	RECEPT – DATA RACK	A	20	1									0.20	0.20
10	RECEPT – DATA RACK	B	20	1									0.20	0.20
12	RECEPT – DATA RACK	C	20	1									0.20	0.20
14	RECEPT – DATA RACK	A	20	1									0.20	0.20
16	RECEPT – DATA RACK	B	20	1									0.20	0.20
18	RECEPT – DATA RACK	C	20	1									0.20	0.20
20	RECEPT – DATA RACK	A	20	1									0.20	0.20
22	RECEPT – DATA RACK	B	20	1									0.20	0.20
24	RECEPT – DATA RACK	C	20	1									0.20	0.20
26	RECEPT – DATA RACK – IDF	A	20	1									0.20	0.20
28	SPARE C.B.	B	20	1										0.00
30	SPARE C.B.	C	20	1										0.00
32	SPARE C.B.	A	20	1										0.00
34	SPARE C.B.	B	20	1										0.00
36	SPARE C.B.	C	20	1										0.00
38	SPARE C.B.	A	20	1										0.00
40	SPARE C.B.	B	20	1										0.00
42	SPARE C.B.	C	20	1										0.00

Specifications:
Rating (Amps): 200
Voltage (L–L): 208
Phase: 3
Wire: 4
Bus Material: Cu
Int. Rating: 22,000A
Main Lugs Only: X
Main Ckt Brkr: –
Surface Mtd: X
Flush Mtd: –
Bonded Gnd: –
Isolated Gnd: –
200% Neutral: –
Feed Thru: –
Double Lug: –
Top Feed: –
Bottom Feed –

Feed Thru Load: NONE
Phase A: 0.00
Phase B: 0.00
Phase C: 0.00
Total Conn.: 0.00
Load From This Panel:
Phase A: 1.61
Phase B: 1.41
Phase C: 1.18
Total Conn.: 4.20
Total Connected Load:
Phase A: 1.61
Phase B: 1.41
Phase C: 1.18
Total Conn.: 4.20
Total Feeder Demand Load:
Total: 4.30 kva
Avg. Amps/Phase: 12 A.

CATEGORY	TOTAL CONN. LOAD (kVA)	DEMAND FACTOR	DEMAND LOAD (kVA)
Receptacles	0.18	50%>10kVA	0.18
Lighting	0.00	125%	0.00
Kitchen Equipment	0.00	NEC 220.56	0.00
Motors (Largest)	0.42	125%	0.52
Motors	0.00	100%	0.00
Heating	0.00	NEC 220.60	0.00
Cooling	0.00	NEC 220.60	0.00
Continuous Load	0.00	125%	0.00
Non-Continuous Load	3.60	100%	3.60
TOTAL	4.20		4.30

General Notes:

Keyed Notes:

COFFMAN ENGINEERS, INC.

PSE OP TRAINING CENTER — PANEL SCHEDULE — NEW PANEL: SL3

221158

Location: SECURITY ROOM — Feed Through: — Source: SL1

Ckt	Load Description	Phase	Amp	Poles	Notes	Rec.	Ltg.	Kit.	Mtr.	Htg.	Clg.	Cont.	Non.	Total
1	SFCU–02–01	A	20	2					0.10					0.10
3	–	B	–	–					0.10					0.10
5	RECEPT – SECRUITY	C	20	1		0.18								0.18
7	SECUITY CONTROL PANEL	A	20	1									0.20	0.20
9	DOOR LOCK CONTROLLERS	B	20	1									0.20	0.20
11	SPARE C.B.	C	20	1										0.00
13	SPARE C.B.	A	20	1										0.00
15	SPARE C.B.	B	20	1										0.00
17	SPARE C.B.	C	20	1										0.00
19	SPARE C.B.	A	20	1										0.00
21	SPARE C.B.	B	20	1										0.00
23	SPARE C.B.	C	20	1										0.00
25	SPARE C.B.	A	20	1										0.00
27	SPARE C.B.	B	20	1										0.00
29	SPARE C.B.	C	20	1										0.00
31	SPARE C.B.	A	20	1										0.00
33	SPARE C.B.	B	20	1										0.00
35	SPARE C.B.	C	20	1										0.00
37	SPARE C.B.	A	20	1										0.00
39	SPARE C.B.	B	20	1										0.00
41	SPARE C.B.	C	20	1										0.00
2	RECEPT – SECURITY RACK	A	20	1									0.20	0.20
4	RECEPT – SECURITY RACK	B	20	1									0.20	0.20
6	RECEPT – SECURITY RACK	C	20	1									0.20	0.20
8	RECEPT – SECURITY RACK	A	20	1									0.20	0.20
10	RECEPT – SECURITY RACK	B	20	1									0.20	0.20
12	RECEPT – SECURITY RACK	C	20	1									0.20	0.20
14	SPARE C.B.	A	20	1										0.00
16	SPARE C.B.	B	20	1										0.00
18	SPARE C.B.	C	20	1										0.00
20	SPARE C.B.	A	20	1										0.00
22	SPARE C.B.	B	20	1										0.00
24	SPARE C.B.	C	20	1										0.00
26	SPARE C.B.	A	20	1										0.00
28	SPARE C.B.	B	20	1										0.00
30	SPARE C.B.	C	20	1										0.00
32	SPARE C.B.	A	20	1										0.00
34	SPARE C.B.	B	20	1										0.00
36	SPARE C.B.	C	20	1										0.00
38	SPARE C.B.	A	20	1										0.00
40	SPARE C.B.	B	20	1										0.00
42	SPARE C.B.	C	20	1										0.00

Specifications:
Rating (Amps): 200
Voltage (L–L): 208
Phase: 3
Wire: 4
Bus Material: Cu
Int. Rating: 22,000A
Main Lugs Only: X
Main Ckt Brkr: –
Surface Mtd: X
Flush Mtd: –
Bonded Gnd: –
Isolated Gnd: –
200% Neutral: –
Feed Thru: –
Double Lug: –
Top Feed: –
Bottom Feed –

Feed Thru Load: NONE
Phase A: 0.00
Phase B: 0.00
Phase C: 0.00
Total Conn.: 0.00
Load From This Panel:
Phase A: 0.70
Phase B: 0.70
Phase C: 0.58
Total Conn.: 1.99
Total Connected Load:
Phase A: 0.70
Phase B: 0.70
Phase C: 0.58
Total Conn.: 1.99
Total Feeder Demand Load:
Total: 2.04 kva
Avg. Amps/Phase: 6 A.

CATEGORY	TOTAL CONN. LOAD (kVA)	DEMAND FACTOR	DEMAND LOAD (kVA)
Receptacles	0.18	50%>10kVA	0.18
Lighting	0.00	125%	0.00
Kitchen Equipment	0.00	NEC 220.56	0.00
Motors (Largest)	0.21	125%	0.26
Motors	0.00	100%	0.00
Heating	0.00	NEC 220.60	0.00
Cooling	0.00	NEC 220.60	0.00
Continuous Load	0.00	125%	0.00
Non-Continuous Load	1.60	100%	1.60
TOTAL	1.99		2.04

General Notes:

Keyed Notes:

COFFMAN ENGINEERS, INC.

PSE OP TRAINING CENTER — PANEL SCHEDULE — NEW PANEL: SL4

221158

Location: COMMUNICATIONS ROOM — Feed Through: — Source: SL1

Ckt	Load Description	Phase	Amp	Poles	Notes	Rec.	Ltg.	Kit.	Mtr.	Htg.	Clg.	Cont.	Non.	Total
1	RECEPT – SECURITY RACK	A	20	2									0.20	0.20
3	RECEPT – SECURITY RACK	B	–	–									0.20	0.20
5	RECEPT – SECURITY RACK	C	20	1									0.20	0.20
7	RECEPT – SECURITY RACK	A	20	1									0.20	0.20
9	RECEPT – SECURITY RACK	B	20	1									0.20	0.20
11	RECEPT – SECURITY RACK	C	20	1									0.20	0.20
13	SPARE C.B.	A	20	1									0.20	0.20
15	SPARE C.B.	B	20	1									0.20	0.20
17	SPARE C.B.	C	20	1										0.00
19	SPARE C.B.	A	20	1										0.00
21	SPARE C.B.	B	20	1										0.00
23	SPARE C.B.	C	20	1										0.00
25	SPARE C.B.	A	20	1										0.00
27	SPARE C.B.	B	20	1										0.00
29	SPARE C.B.	C	20	1										0.00
31	SPARE C.B.	A	20	1										0.00
33	SPARE C.B.	B	20	1										0.00
35	SPARE C.B.	C	20	1										0.00
37	SPARE C.B.	A	20	1										0.00
39	SPARE C.B.	B	20	1										0.00
41	SPARE C.B.	C	20	1										0.00
2	RECEPT – DATA RACK	A	20	1									0.20	0.20
4	RECEPT – DATA RACK	B	20	1									0.20	0.20
6	RECEPT – DATA RACK	C	20	1									0.20	0.20
8	RECEPT – DATA RACK	A	20	1									0.20	0.20
10	RECEPT – DATA RACK	B	20	1									0.20	0.20
12	RECEPT – DATA RACK	C	20	1									0.20	0.20
14	RECEPT – DATA RACK	A	20	1									0.20	0.20
16	RECEPT – DATA RACK	B	20	1									0.20	0.20
18	RECEPT – DATA RACK	C	20	1									0.20	0.20
20	RECEPT – DATA RACK	A	20	1									0.20	0.20
22	RECEPT – DATA RACK	B	20	1									0.20	0.20
24	RECEPT – DATA RACK	C	20	1									0.20	0.20
26	RECEPT – DATA RACK – IDF	A	20	1									0.20	0.20
28	SPARE C.B.	B	20	1										0.00
30	SPARE C.B.	C	20	1										0.00
32	SPARE C.B.	A	20	1										0.00
34	SPARE C.B.	B	20	1										0.00
36	SPARE C.B.	C	20	1										0.00
38	SPARE C.B.	A	20	1										0.00
40	SPARE C.B.	B	20	1										0.00
42	SPARE C.B.	C	20	1										0.00

Specifications:
Rating (Amps): 200
Voltage (L–L): 208
Phase: 3
Wire: 4
Bus Material: Cu
Int. Rating: 22,000A
Main Lugs Only: X
Main Ckt Brkr: –
Surface Mtd: X
Flush Mtd: –
Bonded Gnd: –
Isolated Gnd: –
200% Neutral: –
Feed Thru: –
Double Lug: –
Top Feed: –
Bottom Feed –

Feed Thru Load: NONE
Phase A: 0.00
Phase B: 0.00
Phase C: 0.00
Total Conn.: 0.00
Load From This Panel:
Phase A: 1.60
Phase B: 1.40
Phase C: 1.20
Total Conn.: 4.20
Total Connected Load:
Phase A: 1.60
Phase B: 1.40
Phase C: 1.20
Total Conn.: 4.20
Total Feeder Demand Load:
Total: 4.20 kva
Avg. Amps/Phase: 12 A.

CATEGORY	TOTAL CONN. LOAD (kVA)	DEMAND FACTOR	DEMAND LOAD (kVA)
Receptacles	0.00	50%>10kVA	0.00
Lighting	0.00	125%	0.00
Kitchen Equipment	0.00	NEC 220.56	0.00
Motors (Largest)	0.00	125%	0.00
Motors	0.00	100%	0.00
Heating	0.00	NEC 220.60	0.00
Cooling	0.00	NEC 220.60	0.00
Continuous Load	0.00	125%	0.00
Non-Continuous Load	4.20	100%	4.20
TOTAL	4.20		4.20

General Notes:

Keyed Notes:

COFFMAN ENGINEERS, INC.

PSE OP TRAINING CENTER — PANEL SCHEDULE — NEW PANEL: SL5

221158

Location: COMMUNICATIONS ROOM — Feed Through: — Source: SL1

Ckt	Load Description	Phase	Amp	Poles	Notes	Rec.	Ltg.	Kit.	Mtr.	Htg.	Clg.	Cont.	Non.	Total
1	GATE OPERATOR – WEST	A	30	3					2.00					2.00
3	–	B	–	–					2.00					2.00
5	–	C	–	–					2.00					2.00
7	GATE OPERATOR – EAST	A	30	3					2.00					2.00
9	–	B	–	–					2.00					2.00
11	–	C	–	–					2.00					2.00
13	GATE OPERATOR – NORTH	A	30	3					2.00					2.00
15	–	B	–	–					2.00					2.00
17	–	C	–	–					2.00					2.00
19	SPARE C.B.	A	20	1										0.00
21	SPARE C.B.	B	20	1										0.00
23	SPARE C.B.	C	20	1										0.00
25	SPARE C.B.	A	20	1										0.00
27	SPARE C.B.	B	20	1										0.00
29	SPARE C.B.	C	20	1										0.00
31	SPARE C.B.	A	20	1										0.00
33	SPARE C.B.	B	20	1										0.00
35	SPARE C.B.	C	20	1										0.00
37	SPARE C.B.	A	20	1										0.00
39	SPARE C.B.	B	20	1										0.00
41	SPARE C.B.	C	20	1										0.00
2	GATE CONTROLLER – WEST	A	20	1									0.20	0.20
4	GATE CONTROLLER – WEST	B	20	1									0.20	0.20
6	GATE CONTROLLER – EAST	C	20	1									0.20	0.20
8	GATE CONTROLLER – EAST	A	20	1									0.20	0.20
10	GATE CONTROLLER – NORTH	B	20	1									0.20	0.20
12	GATE CONTROLLER – NORTH	C	20	1									0.20	0.20
14	RECEPT – GATE WEST	A	20	1		0.36								0.36
16	RECEPT – GATE EAST	B	20	1		0.36								0.36
18	RECEPT – GATE NORTH	C	20	1		0.36								0.36
20	SPARE C.B.	A	20	1										0.00
22	SPARE C.B.	B	20	1										0.00
24	SPARE C.B.	C	20	1										0.00
26	SPARE

PRCNC20240216

ZERVAS
ARCHITECTURE | INTERIOR DESIGN
zervasgroup.com
209 Prospect Street
Bellingham, WA 98225
360.734.4744

COFFMAN ENGINEERS
1101 2nd Avenue,
Suite 400
Seattle, WA 98101
ph 206.623.0717
www.coffman.com

CHRISTOPHER J. BAKER — STATE OF WASHINGTON — 31344 — REGISTERED PROFESSIONAL ENGINEER
1/25/2024

City of Puyallup
Development & Permitting Services
ISSUED PERMIT
Building | Planning | Engineering | Public Works | Fire | Traffic

PSE OP TRAINING CENTER — PANEL SCHEDULE — NEW PANEL: NL1A

221158

Location: MAIN ELECTRICAL ROOM — Feed Through: NL1B — Source: MSS2

Ckt	Load Description	Phase	Amp	Poles	Notes	Rec.	Ltg.	Kit.	Mtr.	Htg.	Clg.	Cont.	Non.	Total
1	FURNITURE FEED – OPEN OFFICE	A	20	1		0.72								0.72
3	FURNITURE FEED – OPEN OFFICE	B	20	1		0.72								0.72
5	FURNITURE FEED – OPEN OFFICE	C	20	1		0.72								0.72
7	FURNITURE FEED – OPEN OFFICE	A	20	1		0.72								0.72
9	RECEPT – OPEN OFFICE	B	20	1		0.54								0.54
11	RECEPT – WORKROOM	C	20	1		0.72								0.72
13	PRINTER – WORKROOM	A	20	1									0.50	0.50
15	PLOTTER – WORKROOM	B	20	1									0.50	0.50
17	RECEPT – FOCUS	C	20	1		0.72								0.72
19	RECEPT – CONFERENCE	A	20	1		0.90								0.90
21	RECEPT – CONFERENCE	B	20	1		0.36								0.36
23	EWC – OFFICE	C	20	1									0.50	0.50
25	RECEPT – CORRIDOR, RESTROOMS	A	20	1		0.90								0.90
27	RECEPT – CORRIDOR, RESTROOMS	B	20	1		1.08								1.08
29	RECEPT – CORRIDOR	C	20	1		0.72								0.72
31	RECEPT – GAS WORKER LAB	A	20	1		0.72								0.72
33	RECEPT – GAS WORKER LAB	B	20	1		0.72								0.72
35	RECEPT – GAS WORKER LAB	C	20	1		0.36								0.36
37	RECEPT – GAS WORKER LAB	A	20	1		0.54								0.54
39	FURNITURE FEED – OPEN OFFICE	B	20	1		0.72								0.72
41	SPARE C.B.	C	20	1										0.00
2	RECEPT – GAS OP TRAINING	A	20	1		0.18								0.18
4	RECEPT – GAS OP TRAINING	B	20	1		0.18								0.18
6	RECEPT – GAS OP TRAINING	C	20	1		0.18								0.18
8	RECEPT – GAS OP TRAINING	A	20	1		0.18								0.18
10	RECEPT – GAS OP TRAINING	B	20	1		0.18								0.18
12	RECEPT – GAS OP TRAINING	C	20	1		0.18								0.18
14	ROLL DOWN DOOR – GAS OP	A	20	1									0.50	0.50
16	RECEPT – FLOW LAB	B	20	1		0.18								0.18
18	RECEPT – FLOW LAB	C	20	1		0.18								0.18
20	RECEPT – FLOW LAB	A	20	1		0.18								0.18
22	RECEPT – FLOW LAB	B	20	1		0.18								0.18
24	RECEPT – FLOW LAB	C	20	1		0.18								0.18
26	RECEPT – FLOW LAB	A	20	1		0.18								0.18
28	RECEPT – FLOW LAB	B	20	1		0.18								0.18
30	RECEPT – FLOW LAB	C	20	1		0.18								0.18
32	RECEPT – FLOW LAB	A	20	1		0.72								0.72
34	RECEPT – FLOW LAB	B	20	1		0.54								0.54
36	ROLL DOWN DOOR – FLOW LAB	C	20	1									0.50	0.50
38	SPD	A	20	3										0.00
40	–	B	–	–										0.00
42	–	C	–	–										0.00

Specifications

Rating (Amps):	400
Voltage (L–L):	208
Phase:	3
Wire:	4
Bus Material:	Cu
Int. Rating:	22,000A
Main Lugs Only:	–
Main Ckt Brkr:	400 A
Surface Mtd:	X
Flush Mtd:	–
Bonded Gnd:	–
Isolated Gnd:	–
200% Neutral:	–
Feed Thru:	X
Double Lug:	–
Top Feed:	–
Bottom Feed	–

Feed Thru Load:	NL1B
Phase A:	3.06
Phase B:	3.88
Phase C:	4.70
Total Conn.:	11.64
Load From This Panel:	
Phase A:	6.94
Phase B:	6.08
Phase C:	5.14
Total Conn.:	18.16
Total Connected Load:	
Phase A:	10.00
Phase B:	9.96
Phase C:	9.84
Total Conn.:	29.80
Total Feeder Demand Load:	
Total:	22.65 kVA
Avg. Amps/Phase:	63 A.

CATEGORY	TOTAL CONN. LOAD (kVA)	DEMAND FACTOR	DEMAND LOAD (kVA)
Receptacles	24.30	50%>10kVA	17.15
Lighting	0.00	125%	0.00
Kitchen Equipment	0.00	NEC 220.56	0.00
Motors (Largest)	0.00	125%	0.00
Motors	0.00	100%	0.00
Heating	0.00	NEC 220.60	0.00
Cooling	0.00	NEC 220.60	0.00
Continuous Load	0.00	125%	0.00
Non-Continuous Load	5.50	100%	5.50
TOTAL	29.80		22.65

General Notes:

Keyed Notes:

COFFMAN ENGINEERS, INC.

PSE OP TRAINING CENTER — PANEL SCHEDULE — NEW PANEL: NL1B

221158

Location: MAIN ELECTRICAL ROOM — Feed Through: — Source: MSS2

Ckt	Load Description	Phase	Amp	Poles	Notes	Rec.	Ltg.	Kit.	Mtr.	Htg.	Clg.	Cont.	Non.	Total
1	RECEPT – FITTING LAB	A	20	1		0.18								0.18
3	RECEPT – FITTING LAB	B	20	1		0.18								0.18
5	RECEPT – FITTING LAB	C	20	1		0.18								0.18
7	RECEPT – FITTING LAB	A	20	1		0.18								0.18
9	RECEPT – FITTING LAB	B	20	1		0.18								0.18
11	RECEPT – FITTING LAB	C	20	1		0.18								0.18
13	RECEPT – FITTING LAB	A	20	1		0.18								0.18
15	RECEPT – FITTING LAB	B	20	1		0.18								0.18
17	RECEPT – FITTING LAB	C	20	1		0.18								0.18
19	RECEPT – FITTING LAB	A	20	1		0.18								0.18
21	RECEPT – FITTING LAB	B	20	1		0.18								0.18
23	RECEPT – FITTING LAB	C	20	1		0.18								0.18
25	RECEPT – FITTING LAB	A	20	1		0.18								0.18
27	RECEPT – FITTING LAB	B	20	1		0.18								0.18
29	RECEPT – FITTING LAB	C	20	1		0.72								0.72
31	RECEPT – FITTING LAB	A	20	1		0.72								0.72
33	RECEPT – FITTING LAB	B	20	1		0.72								0.72
35	RECEPT – FITTING LAB	C	20	1		0.54								0.54
37	RECEPT – FITTING LAB	A	20	1		0.54								0.54
39	RECEPT – FITTING LAB	B	20	1		0.18								0.18
41	ROLL DOWN DOOR – FLOW LAB	C	20	1									0.50	0.50
2	RECEPT – FITTING LAB	A	20	1		0.18								0.18
4	RECEPT – FITTING LAB	B	20	1		0.18								0.18
6	RECEPT – FITTING LAB	C	20	1		0.18								0.18
8	RECEPT – FITTING LAB	A	20	1		0.18								0.18
10	RECEPT – FITTING LAB	B	20	1		0.18								0.18
12	RECEPT – FITTING LAB	C	20	1		0.18								0.18
14	RECEPT – FITTING LAB	A	20	1		0.18								0.18
16	RECEPT – FITTING LAB	B	20	1		0.18								0.18
18	RECEPT – FITTING LAB	C	20	1		0.18								0.18
20	RECEPT – FITTING LAB	A	20	1		0.18								0.18
22	RECEPT – WAREHOUSE	B	20	1		0.36								0.36
24	ROLL DOWN DOOR – WAREHOUSE	C	20	1									0.50	0.50
26	CORD REEL – GAS OP	A	20	1		0.18								0.18
28	CORD REEL – GAS OP	B	20	1		0.18								0.18
30	CORD REEL – FLOW LAB	C	20	1		0.18								0.18
32	SPARE C.B.	A	20	1										0.00
34	SPARE C.B.	B	20	1										0.00
36	SPARE C.B.	C	20	1										0.00
38	SPARE C.B.	A	20	1										0.00
40	DUCT CLEANING	B	20	2									1.00	1.00
42	–	C	–	–									1.00	1.00

Specifications

Rating (Amps):	400
Voltage (L–L):	208
Phase:	3
Wire:	4
Bus Material:	Cu
Int. Rating:	22,000A
Main Lugs Only:	X
Main Ckt Brkr:	–
Surface Mtd:	X
Flush Mtd:	–
Bonded Gnd:	–
Isolated Gnd:	–
200% Neutral:	–
Feed Thru:	–
Double Lug:	–
Top Feed:	–
Bottom Feed	–

Feed Thru Load:	NONE
Phase A:	0.00
Phase B:	0.00
Phase C:	0.00
Total Conn.:	0.00
Load From This Panel:	
Phase A:	3.06
Phase B:	3.88
Phase C:	4.70
Total Conn.:	11.64
Total Connected Load:	
Phase A:	3.06
Phase B:	3.88
Phase C:	4.70
Total Conn.:	11.64
Total Feeder Demand Load:	
Total:	11.64 kVA
Avg. Amps/Phase:	32 A.

CATEGORY	TOTAL CONN. LOAD (kVA)	DEMAND FACTOR	DEMAND LOAD (kVA)
Receptacles	8.64	50%>10kVA	8.64
Lighting	0.00	125%	0.00
Kitchen Equipment	0.00	NEC 220.56	0.00
Motors (Largest)	0.00	125%	0.00
Motors	0.00	100%	0.00
Heating	0.00	NEC 220.60	0.00
Cooling	0.00	NEC 220.60	0.00
Continuous Load	0.00	125%	0.00
Non-Continuous Load	3.00	100%	3.00
TOTAL	11.64		11.64

General Notes:

Keyed Notes:

COFFMAN ENGINEERS, INC.

PSE OP TRAINING CENTER — PANEL SCHEDULE — NEW PANEL: NL2

221158

Location: MAIN ELECTRICAL ROOM — Feed Through: — Source: MSS2

Ckt	Load Description	Phase	Amp	Poles	Notes	Rec.	Ltg.	Kit.	Mtr.	Htg.	Clg.	Cont.	Non.	Total
1	GAS FURNACE 2A – APP LAB	A	20	1									0.10	0.10
3	GAS WATER HEATER 2B – APP LAB	B	20	1									0.10	0.10
5	GAS FURNACE 3A – APP LAB	C	20	1									0.10	0.10
7	GAS WATER HEATER 3B – APP LAB	A	20	1									0.10	0.10
9	GAS FURNACE 4A – APP LAB	B	20	1									0.10	0.10
11	GAS WATER HEATER 4B – APP LAB	C	20	1									0.10	0.10
13	GAS FURNACE 5A – APP LAB	A	20	1									0.10	0.10
15	GAS WATER HEATER 5B – APP LAB	B	20	1									0.10	0.10
17	GAS FURNACE 6A – APP LAB	C	20	1									0.10	0.10
19	GAS WATER HEATER 6B – APP LAB	A	20	1									0.10	0.10
21	GAS FURNACE 7A – APP LAB	B	20	1									0.10	0.10
23	GAS WATER HEATER 7B – APP LAB	C	20	1									0.10	0.10
25	GAS FURNACE 8A – APP LAB	A	20	1									0.10	0.10
27	GAS WATER HEATER 8B – APP LAB	B	20	1									0.10	0.10
29	GAS FURNACE 9A – APP LAB	C	20	1									0.10	0.10
31	GAS WATER HEATER 9B – APP LAB	A	20	1									0.10	0.10
33	GAS FURNACE 10A – APP LAB	B	20	1									0.10	0.10
35	GAS WATER HEATER 10B – APP LAB	C	20	1									0.10	0.10
37	SPARE C.B.	A	20	1										0.00
39	SPARE C.B.	B	20	1										0.00
41	SPARE C.B.	C	20	1										0.00
2	GAS FURNACE 11A – APP LAB	A	20	1									0.10	0.10
4	GAS WATER HEATER 11B – APP LAB	B	20	1									0.10	0.10
6	GAS FURNACE 12A – APP LAB	C	20	1									0.10	0.10
8	GAS WATER HEATER 12B – APP LAB	A	20	1									0.10	0.10
10	GAS FURNACE 13A – APP LAB	B	20	1									0.10	0.10
12	GAS WATER HEATER 13B – APP LAB	C	20	1									0.10	0.10
14	GAS FURNACE 14A – APP LAB	A	20	1									0.10	0.10
16	GAS WATER HEATER 14B – APP LAB	B	20	1									0.10	0.10
18	GAS FURNACE 15A – APP LAB	C	20	1									0.10	0.10
20	GAS WATER HEATER 15B – APP LAB	A	20	1									0.10	0.10
22	GAS FURNACE 16A – APP LAB	B	20	1									0.10	0.10
24	GAS WATER HEATER 16B – APP LAB	C	20	1									0.10	0.10
26	GAS FURNACE 17A – APP LAB	A	20	1									0.10	0.10
28	GAS WATER HEATER 17B – APP LAB	B	20	1									0.10	0.10
30	GAS FURNACE 18A – APP LAB	C	20	1									0.10	0.10
32	GAS WATER HEATER 18B – APP LAB	A	20	1									0.10	0.10
34	GAS FURNACE 19A – APP LAB	B	20	1									0.10	0.10
36	GAS WATER HEATER 19B – APP LAB	C	20	1									0.10	0.10
38	SPARE C.B.	A	20	1										0.00
40	SPARE C.B.	B	20	1										0.00
42	SPARE C.B.	C	20	1										0.00

Specifications

Rating (Amps):	400
Voltage (L–L):	208
Phase:	3
Wire:	4
Bus Material:	Cu
Int. Rating:	22,000A
Main Lugs Only:	X
Main Ckt Brkr:	–
Surface Mtd:	X
Flush Mtd:	–
Bonded Gnd:	–
Isolated Gnd:	–
200% Neutral:	–
Feed Thru:	–
Double Lug:	–
Top Feed:	–
Bottom Feed	–

Feed Thru Load:	NONE
Phase A:	0.00
Phase B:	0.00
Phase C:	0.00
Total Conn.:	0.00
Load From This Panel:	
Phase A:	1.20
Phase B:	1.20
Phase C:	1.20
Total Conn.:	3.60
Total Connected Load:	
Phase A:	1.20
Phase B:	1.20
Phase C:	1.20
Total Conn.:	3.60
Total Feeder Demand Load:	
Total:	3.60 kVA
Avg. Amps/Phase:	10 A.

CATEGORY	TOTAL CONN. LOAD (kVA)	DEMAND FACTOR	DEMAND LOAD (kVA)
Receptacles	0.00	50%>10kVA	0.00
Lighting	0.00	125%	0.00
Kitchen Equipment	0.00	NEC 220.56	0.00
Motors (Largest)	0.00	125%	0.00
Motors	0.00	100%	0.00
Heating	0.00	NEC 220.60	0.00
Cooling	0.00	NEC 220.60	0.00
Continuous Load	0.00	125%	0.00
Non-Continuous Load	3.60	100%	3.60
TOTAL	3.60		3.60

General Notes:

Keyed Notes:

COFFMAN ENGINEERS, INC.

PSE OP TRAINING CENTER — PANEL SCHEDULE — NEW PANEL: NL3

221158

Location: MAIN ELECTRICAL ROOM — Feed Through: — Source: MSS2

Ckt	Load Description	Phase	Amp	Poles	Notes	Rec.	Ltg.	Kit.	Mtr.	Htg.	Clg.	Cont.	Non.	Total
1	GAS FURNACE 20A – APP LAB	A	20	1									0.10	0.10
3	GAS WATER HEATER 20B – APP LAB	B	20	1									0.10	0.10
5	GAS FURNACE 21A – APP LAB	C	20	1									0.10	0.10
7	GAS WATER HEATER 21B – APP LAB	A	20	1									0.10	0.10
9	GAS FURNACE 22A – APP LAB	B	20	1									0.10	0.10
11	GAS WATER HEATER 22B – APP LAB	C	20	1									0.10	0.10
13	GAS FURNACE 23A – APP LAB	A	20	1									0.10	0.10
15	GAS WATER HEATER 23B – APP LAB	B	20	1									0.10	0.10
17	GAS FURNACE 24A – APP LAB	C	20	1									0.10	0.10
19	GAS WATER HEATER 24B – APP LAB	A	20	1									0.10	0.10
21	RECEPT – BREAK	B	20	1		0.18								0.18
23	RECEPT – BREAK	C	20	1		0.18								0.18
25	INSTA HOT – BREAK	A	20	1									0.50	0.50
27	GARBAGE DISPOSAL – BREAK	B	20	1									0.50	0.50
29	RECEPT – BREAK	C	20	1		0.18								0.18
31	DISHWASHER – BREAK	A	20	1									1.10	1.10
33	VENDING MACH – BREAK	B	20	1									0.50	0.50
35	VENDING MACH – BREAK	C	20	1									0.50	0.50
37	RECEPT – BREAK	A	20	1		0.72								0.72
39	MICROWAVE – BREAK	B	20	1									1.00	1.00
41	MICROWAVE – BREAK	C	20	1									1.00	1.00
2	RECEPT – APP LAB	A	20	1		0.18								0.18
4	RECEPT – APP LAB	B	20	1		0.18								0.18
6	RECEPT – APP LAB	C	20	1		0.18								0.18
8	RECEPT – APP LAB	A	20	1		0.18								0.18
10	RECEPT – APP LAB	B	20	1		0.18								0.18
12	RECEPT – APP LAB	C	20	1		0.18								0.18
14	RECEPT – APP LAB	A	20	1		0.18								0.18
16	RECEPT – APP LAB	B	20	1		0.18								0.18
18	RECEPT – APP LAB	C	20	1		0.18								0.18
20	RECEPT – APP LAB	A	20	1		0.18								0.18
22	RECEPT – APP LAB	B	20	1		0.18								0.18
24	RECEPT – APP LAB	C	20	1		0.18								0.18
26	RECEPT – APP LAB	A	20	1		0.54								0.54
28	RECEPT – APP LAB	B	20	1		0.90								0.90
30	ROLL DOWN DOOR – APP LAB	C	20	1									0.50	0.50
32	RECEPT – ELEC, MECH	A	20	1		1.08								1.08
34	RECEPT – ROOF	B	20	1		0.54								0.54
36	RECEPT – FAC, MOTHER'S, VEST	C	20	1		0.90								0.90
38	SPARE C.B.	A	20	1										0.00
40	SPARE C.B.	B	20	1										0.00
42	SPARE C.B.	C	20	1										0.00

Specifications

Rating (Amps):	400
Voltage (L–L):	208
Phase:	3
Wire:	4
Bus Material:	Cu
Int. Rating:	22,000A
Main Lugs Only:	X
Main Ckt Brkr:	–
Surface Mtd:	X
Flush Mtd:	–
Bonded Gnd:	–
Isolated Gnd:	–
200% Neutral:	–
Feed Thru:	X
Double Lug:	–
Top Feed:	–
Bottom Feed	–

Feed Thru Load:	NONE
Phase A:	5.06
Phase B:	4.64
Phase C:	4.28
Total Conn.:	13.98
Load From This Panel:	
Phase A:	5.06
Phase B:	4.64
Phase C:	4.28
Total Conn.:	13.98
Total Connected Load:	
Phase A:	10.00
Phase B:	9.96
Phase C:	9.84
Total Conn.:	29.80
Total Feeder Demand Load:	
Total:	13.98 kVA
Avg. Amps/Phase:	39 A.

CATEGORY	TOTAL CONN. LOAD (kVA)	DEMAND FACTOR	DEMAND LOAD (kVA)
Receptacles	7.38	50%>10kVA	7.38
Lighting	0.00	125%	0.00
Kitchen Equipment	0.00	NEC 220.56	0.00
Motors (Largest)	0.00	125%	0.00
Motors	0.00	100%	0.00
Heating	0.00	NEC 220.60	0.00
Cooling	0.00	NEC 220.60	0.00
Continuous Load	0.00	125%	0.00
Non-Continuous Load	6.60	100%	6.60
TOTAL	13.98		13.98

General Notes:

Keyed Notes:

COFFMAN ENGINEERS, INC.

PSE OP TRAINING CENTER — PANEL SCHEDULE — NEW PANEL: NL4A

221158

Location: MAIN ELECTRICAL ROOM — Feed Through: NL4B — Source: MSS2

Ckt	Load Description	Phase	Amp	Poles	Notes	Rec.	Ltg.	Kit.	Mtr.	Htg.	Clg.	Cont.	Non.	Total
1	DOAS–R–03	A	20	2					0.45					0.45
3	–	B	–	–					0.45					0.45
5	BC–01–01,–01–02,–01–03,–01–04	C	20	2					0.50					0.50
7	–	A	–	–					0.50					0.50
9	EF–R–01	B	20	2					0.29					0.29
11	–	C	–	–					0.29					0.29
13	SCU–R–01	A	30	2					2.60					2.60
15	–	B	–	–					2.60					2.60
17	SCU–R–02	C	20	3					1.98					1.98
19	–	A	–	–					1.98					1.98
21	FCU–01–01,–01–02	B	20	2					1.15					1.15
23	–	C	–	–					1.15					1.15
25	FCU–01–03,–01–04,–01–05	A	20	2					1.45					1.45
27	–	B	–	–					1.45					1.45
29	FCU–02–01,–02–02,–02–03	C	20	2					1.56					1.56
31	–	A	–	–					1.56					1.56
33	FCU–02–04,–02–05	B	20	2					0.61					0.61
35	–	C	–	–					0.61					0.61
37	FCU–03–01,–03–02	A	20	2					1.71					1.71
39	–	B	–	–					1.71					1.71
41	SPARE C.B.	C	20	1										0.00
2	FCU–03–03,–03–04	A	20	2					1.71					1.71
4	–	B	–	–					1.71					1.71
6	FCU–04–01,–04–02	C	20	2					1.29					1.29
8	–	A	–	–					1.29					1.29
10	FCU–04–03,–04–04	B	20	2					1.26					1.26
12	–	C	–	–					1.26					1.26
14	FCU–04–05,–04–06	A	20	2					1.26					1.26
16	–	B	–	–					1.26					1.26
18	FCU–05–01	C	20	2					0.85					0.85
20	–	A	–	–					0.85					0.85
22	SCU–R–03	B	20	2					1.14					1.14
24	–	C	–	–					1.14					1.14
26	SPARE C.B.	A	20	2										0.00
28	–	B	–	–										0.00
30	SPARE C.B.	C	20	2										0.00
32	–	A	–	–										0.00
34	SPARE C.B.	B	20	2										0.00
36	–	C	–	–										0.00
38	SPD	A	20	3										0.00
40		B	–	–										0.00
42		C	–	–										0.00

Specifications

Rating (Amps):	400
Voltage (L–L):	208
Phase:	3
Wire:	4
Bus Material:	Cu
Int. Rating:	22,000A
Main Lugs Only:	X
Main Ckt Brkr:	–
Surface Mtd:	X
Flush Mtd:	–
Bonded Gnd:	–
Isolated Gnd:	–
200% Neutral:	–
Feed Thru:	X
Double Lug:	–
Top Feed:	–
Bottom Feed	–

Feed Thru Load:	NL4B
Phase A:	11.59
Phase B:	9.18
Phase C:	10.18
Total Conn.:	30.95
Load From This Panel:	
Phase A:	15.35
Phase B:	13.62
Phase C:	10.63
Total Conn.:	39.59
Total Connected Load:	
Phase A:	26.93
Phase B:	22.80
Phase C:	20.80
Total Conn.:	70.53
Total Feeder Demand Load:	
Total:	74.70 kVA
Avg. Amps/Phase:	207 A.

CATEGORY	TOTAL CONN. LOAD (kVA)	DEMAND FACTOR	DEMAND LOAD (kVA)
Receptacles	0.00	50%>10kVA	0.00
Lighting	0.00	125%	0.00
Kitchen Equipment	0.00	NEC 220.56	0.00
Motors (Largest)	16.64	125%	20.81
Motors	52.81	100%	52.81
Heating	0.00	NEC 220.60	0.00
Cooling	0.00	NEC 220.60	0.00
Continuous Load	0.00	125%	0.00
Non-Continuous Load	1.08	100%	1.08
TOTAL	70.53		74.70

General Notes:

Keyed Notes:

COFFMAN ENGINEERS, INC.

PSE OP TRAINING CENTER — PANEL SCHEDULE — NEW PANEL: NL4B

221158

Location: MAIN ELECTRICAL ROOM — Feed Through: — Source: MSS2

Ckt	Load Description	Phase	Amp	Poles	Notes	Rec.	Ltg.	Kit.	Mtr.	Htg.	Clg.	Cont.	Non.	Total
1	EH–01–01	A	20	1					1.80					1.80
3	EH–01–02	B	20	1					0.76					0.76

PRCNC20240216

ZERVAS
ARCHITECTURE | INTERIOR DESIGN
zervasgroup.com
209 Prospect Street
Bellingham, WA 98225
360.734.4744

COFFMAN ENGINEERS
1101 2nd Avenue,
Suite 400
Seattle, WA 98101
ph 206.623.0717
www.coffman.com

CHRISTOPHER J. BLAKER — STATE OF WASHINGTON — 31344 — REGISTERED PROFESSIONAL ENGINEER
1/25/2024

City of Puyallup
Development & Permitting Services
ISSUED PERMIT
Building | Planning | Engineering | Public Works | Fire | Traffic

PSE OP TRAINING CENTER — PANEL SCHEDULE — NEW PANEL: NL5A

221158

Location: LAB ELECTRICAL ROOM — Feed Through: NL5B — Source: MSS2

Ckt	Load Description	Phase	Amp	Poles	Notes	Rec.	Ltg.	Kit.	Mtr.	Htg.	Clg.	Cont.	Non.	Total
1	RECEPT – CLASSROOM	A	20	1		0.72								0.72
3	RECEPT – CLASSROOM	B	20	1		0.72								0.72
5	RECEPT – CLASSROOM	C	20	1		0.36								0.36
7	RECEPT – CLASSROOM	A	20	1		0.72								0.72
9	RECEPT – CLASSROOM	B	20	1		0.72								0.72
11	RECEPT – CLASSROOM	C	20	1		0.72								0.72
13	RECEPT – CLASSROOM	A	20	1		0.36								0.36
15	RECEPT – CLASSROOM	B	20	1		0.36								0.36
17	RECEPT – CLASSROOM	C	20	1		0.72								0.72
19	RECEPT – CLASSROOM	A	20	1		0.72								0.72
21	RECEPT – CLASSROOM	B	20	1		0.72								0.72
23	RECEPT – CLASSROOM	C	20	1		0.54								0.54
25	RECEPT – CLASSROOM	A	20	1		0.90								0.90
27	PROJECTOR – CLASSROOM	B	20	1									0.20	0.20
29	RECEPT – CORRIDOR, STORAGE	C	20	1		0.72								0.72
31	LTG – COMPRESSOR BUILDING	A	20	1			0.10							0.10
33	RECEPT – COMPRESSOR BUILDING	B	20	1		0.36								0.36
35	SPARE C.B.	C	20	1										0.00
37	SPARE C.B.	A	20	1										0.00
39	SPARE C.B.	B	20	1										0.00
41	SPARE C.B.	C	20	1										0.00
2	SPARE C.B.	A	20	1										0.00
4	SPARE C.B.	B	20	1										0.00
6	SPARE C.B.	C	20	1										0.00
8	SPARE C.B.	A	20	1										0.00
10	SPARE C.B.	B	20	1										0.00
12	SPARE C.B.	C	20	1										0.00
14	SPARE C.B.	A	20	1										0.00
16	SPARE C.B.	B	20	1										0.00
18	SPARE C.B.	C	20	1										0.00
20	SPARE C.B.	A	20	1										0.00
22	SPARE C.B.	B	20	1										0.00
24	SPARE C.B.	C	20	1										0.00
26	RECEPT – COVERED	A	20	2		0.09								0.09
28	–	B	–	–		0.09								0.09
30	RECEPT – COVERED	C	20	2		0.09								0.09
32	–	A	–	–		0.09								0.09
34	RECEPT – COVERED	B	20	2		0.09								0.09
36	–	C	–	–		0.09								0.09
38	SPD	A	20	3										0.00
40	–	B	–	–										0.00
42	–	C	–	–										0.00

Specifications

Rating (Amps):	400
Voltage (L–L):	208
Phase:	3
Wire:	4
Bus Material:	Cu
Int. Rating:	22,000A
Main Lugs Only:	–
Main Ckt Brkr:	400 A
Surface Mtd:	X
Flush Mtd:	–
Bonded Gnd:	–
Isolated Gnd:	–
200% Neutral:	–
Feed Thru:	X
Double Lug:	–
Top Feed:	–
Bottom Feed	–

Feed Thru Load:	NL5B
Phase A:	4.74
Phase B:	3.26
Phase C:	3.24
Total Conn.:	10.20
Total Connected Load:	
Phase A:	8.44
Phase B:	9.49
Phase C:	9.79
Total Conn.:	27.72
Total Feeder Demand Load:	
Total:	23.12 kVA
Avg. Amps/Phase:	64 A.

CATEGORY	TOTAL CONN. LOAD (kVA)	DEMAND FACTOR	DEMAND LOAD (kVA)
Receptacles	19.26	50%>10kVA	14.63
Lighting	0.10	125%	0.13
Kitchen Equipment	0.00	NEC 220.56	0.00
Motors (Largest)	0.00	125%	0.00
Motors	0.00	100%	0.00
Heating	0.00	NEC 220.60	0.00
Cooling	0.00	NEC 220.60	0.00
Continuous Load	0.00	125%	0.00
Non-Continuous Load	8.36	100%	8.36
TOTAL	27.72		23.12

General Notes:

Keyed Notes:

COFFMAN ENGINEERS, INC.

PSE OP TRAINING CENTER — PANEL SCHEDULE — NEW PANEL: NL5B

221158

Location: LAB ELECTRICAL ROOM — Feed Through: — Source: MSS2

Ckt	Load Description	Phase	Amp	Poles	Notes	Rec.	Ltg.	Kit.	Mtr.	Htg.	Clg.	Cont.	Non.	Total
1	RECEPT – ELEC LAB TRENCH	A	20	1		0.54								0.54
3	RECEPT – ELEC LAB TRENCH	B	20	1		0.72								0.72
5	RECEPT – ELEC LAB TRENCH	C	20	1		0.72								0.72
7	RECEPT – ELEC LAB TRENCH	A	20	1		0.72								0.72
9	RECEPT – ELEC LAB TRENCH	B	20	1		0.72								0.72
11	RECEPT – ELEC LAB TRENCH	C	20	1		0.54								0.54
13	RECEPT – ELEC OPERATIONS LAB	A	20	1		0.72								0.72
15	RECEPT – ELEC OPERATIONS LAB	B	20	1		0.72								0.72
17	RECEPT – ELEC OPERATIONS LAB	C	20	1		0.72								0.72
19	RECEPT – WAREHOUSE	A	20	1		0.00								0.00
21	RECEPT – WAREHOUSE	B	20	1		0.00								0.00
23	RECEPT – WAREHOUSE	C	20	1		0.90								0.90
25	EWC – ICE	A	20	1									0.50	0.50
27	RECEPT – COVERED	B	20	1		0.90								0.90
29	ROLL DOWN DOOR ELEC LAB	C	20	1									0.50	0.50
31	HOIST – COVERED	A	30	3									0.72	0.72
33	–	B	–	–									0.72	0.72
35	–	C	–	–									0.72	0.72
37	FORK LIFT CHARGER – COVERED	A	30	3									1.00	1.00
39	–	B	–	–									1.00	1.00
41	–	C	–	–									1.00	1.00
2	RECEPT – COVERED	A	20	2		0.09								0.09
4	–	B	–	–		0.09								0.09
6	RECEPT – COVERED	C	20	2		0.09								0.09
8	–	A	–	–		0.09								0.09
10	RECEPT – ELEC OPERATIONS LAB	B	20	2		0.09								0.09
12	–	C	–	–		0.09								0.09
14	RECEPT – ELEC OPERATIONS LAB	A	20	2		0.09								0.09
16	–	B	–	–		0.09								0.09
18	RECEPT – ELEC OPERATIONS LAB	C	30	2		0.09								0.09
20	–	A	–	–		0.09								0.09
22	RECEPT – ELEC OPERATIONS LAB	B	30	2		0.09								0.09
24	–	C	–	–		0.09								0.09
26	RECEPT – ELEC LAB TRENCH	A	30	2		0.09								0.09
28	–	B	–	–		0.09								0.09
30	RECEPT – ELEC LAB TRENCH	C	30	2		0.09								0.09
32	–	A	–	–		0.09								0.09
34	SPARE C.B.	B	20	1										0.00
36	SPARE C.B.	C	20	1										0.00
38	SPARE C.B.	A	20	1										0.00
40	DUCT CLEANING	B	30	2									1.00	1.00
42	–	C	–	–									1.00	1.00

Specifications

Rating (Amps):	400
Voltage (L–L):	208
Phase:	3
Wire:	4
Bus Material:	Cu
Int. Rating:	22,000A
Main Lugs Only:	X
Main Ckt Brkr:	–
Surface Mtd:	X
Flush Mtd:	–
Bonded Gnd:	–
Isolated Gnd:	–
200% Neutral:	–
Feed Thru:	–
Double Lug:	–
Top Feed:	–
Bottom Feed	–

Feed Thru Load:	NONE
Phase A:	0.00
Phase B:	0.00
Phase C:	0.00
Total Conn.:	0.00
Load From This Panel:	
Phase A:	4.74
Phase B:	6.23
Phase C:	6.55
Total Conn.:	17.52
Total Connected Load:	
Phase A:	4.74
Phase B:	6.23
Phase C:	6.55
Total Conn.:	17.52
Total Feeder Demand Load:	
Total:	17.52 kVA
Avg. Amps/Phase:	49 A.

CATEGORY	TOTAL CONN. LOAD (kVA)	DEMAND FACTOR	DEMAND LOAD (kVA)
Receptacles	9.36	50%>10kVA	9.36
Lighting	0.00	125%	0.00
Kitchen Equipment	0.00	NEC 220.56	0.00
Motors (Largest)	0.00	125%	0.00
Motors	0.00	100%	0.00
Heating	0.00	NEC 220.60	0.00
Cooling	0.00	NEC 220.60	0.00
Continuous Load	0.00	125%	0.00
Non-Continuous Load	8.16	100%	8.16
TOTAL	17.52		17.52

General Notes:

Keyed Notes:

COFFMAN ENGINEERS, INC.

PSE OP TRAINING CENTER — PANEL SCHEDULE — NEW PANEL: NL6

221158

Location: MAIN ELECTRICAL ROOM — Feed Through: — Source: MSS2

Ckt	Load Description	Phase	Amp	Poles	Notes	Rec.	Ltg.	Kit.	Mtr.	Htg.	Clg.	Cont.	Non.	Total
1	EV CHARGING STATION	A	40	2									3.33	3.33
3	–	B	–	–									3.33	3.33
5	EV CHARGING STATION	C	40	2									3.33	3.33
7	–	A	–	–									3.33	3.33
9	EV CHARGING STATION	B	40	2									3.33	3.33
11	–	C	–	–									3.33	3.33
13	EV CHARGING STATION	A	40	2									3.33	3.33
15	–	B	–	–									3.33	3.33
17	EV CHARGING STATION	C	40	2									3.33	3.33
19	–	A	–	–									3.33	3.33
21	EV CHARGING STATION	B	40	2									3.33	3.33
23	–	C	–	–									3.33	3.33
25	EV CHARGING STATION	A	40	2									3.33	3.33
27	–	B	–	–									3.33	3.33
29	SPARE C.B.	C	40	2										0.00
31	–	A	–	–										0.00
33	SPARE C.B.	B	40	2										0.00
35	–	C	–	–										0.00
37		A												0.00
39		B												0.00
41		C												0.00
2	SPARE C.B.	A	40	2										0.00
4	–	B	–	–										0.00
6	SPARE C.B.	C	40	2										0.00
8	–	A	–	–										0.00
10	SPARE C.B.	B	40	2										0.00
12	–	C	–	–										0.00
14	SPARE C.B.	A	40	2										0.00
16	–	B	–	–										0.00
18	SPARE C.B.	C	40	2										0.00
20	–	A	–	–										0.00
22	SPARE C.B.	B	40	2										0.00
24	–	C	–	–										0.00
26	SPARE C.B.	A	40	2										0.00
28	–	B	–	–										0.00
30	SPARE C.B.	C	40	2										0.00
32	–	A	–	–										0.00
34	SPARE C.B.	B	40	2										0.00
36	–	C	–	–										0.00
38		A												0.00
40		B												0.00
42		C												0.00

Specifications

Rating (Amps):	400
Voltage (L–L):	208
Phase:	3
Wire:	4
Bus Material:	Cu
Int. Rating:	22,000A
Main Lugs Only:	X
Main Ckt Brkr:	–
Surface Mtd:	X
Flush Mtd:	–
Bonded Gnd:	–
Isolated Gnd:	–
200% Neutral:	–
Feed Thru:	–
Double Lug:	–
Top Feed:	–
Bottom Feed	–

Feed Thru Load:	NONE
Phase A:	0.00
Phase B:	0.00
Phase C:	0.00
Total Conn.:	0.00
Load From This Panel:	
Phase A:	16.64
Phase B:	16.64
Phase C:	13.31
Total Conn.:	46.59
Total Connected Load:	
Phase A:	16.64
Phase B:	16.64
Phase C:	13.31
Total Conn.:	46.59
Total Feeder Demand Load:	
Total:	58.24 kVA
Avg. Amps/Phase:	162 A.

CATEGORY	TOTAL CONN. LOAD (kVA)	DEMAND FACTOR	DEMAND LOAD (kVA)
Receptacles	0.00	50%>10kVA	0.00
Lighting	0.00	125%	0.00
Kitchen Equipment	0.00	NEC 220.56	0.00
Motors (Largest)	0.00	125%	0.00
Motors	0.00	100%	0.00
Heating	0.00	NEC 220.60	0.00
Cooling	0.00	NEC 220.60	0.00
Continuous Load	46.59	125%	58.24
Non-Continuous Load	0.00	100%	0.00
TOTAL	46.59		58.24

General Notes:

Keyed Notes:

COFFMAN ENGINEERS, INC.

PSE OP TRAINING CENTER — PANEL SCHEDULE — NEW PANEL: NL7

221158

Location: MAIN ELECTRICAL ROOM — Feed Through: — Source: MSS2

Ckt	Load Description	Phase	Amp	Poles	Notes	Rec.	Ltg.	Kit.	Mtr.	Htg.	Clg.	Cont.	Non.	Total
1	EV CHARGING STATION (FUTURE)	A	40	2										0.00
3	–	B	–	–										0.00
5	EV CHARGING STATION (FUTURE)	C	40	2										0.00
7	–	A	–	–										0.00
9	EV CHARGING STATION (FUTURE)	B	40	2										0.00
11	–	C	–	–										0.00
13	EV CHARGING STATION (FUTURE)	A	40	2										0.00
15	–	B	–	–										0.00
17	EV CHARGING STATION (FUTURE)	C	40	2										0.00
19	–	A	–	–										0.00
21	EV CHARGING STATION (FUTURE)	B	40	2										0.00
23	–	C	–	–										0.00
25	EV CHARGING STATION (FUTURE)	A	40	2										0.00
27	–	B	–	–										0.00
29	SPARE C.B.	C	40	2										0.00
31	–	A	–	–										0.00
33	SPARE C.B.	B	40	2										0.00
35	–	C	–	–										0.00
37		A												0.00
39		B												0.00
41		C												0.00
2	SPARE C.B.	A	40	2										0.00
4	–	B	–	–										0.00
6	SPARE C.B.	C	40	2										0.00
8	–	A	–	–										0.00
10	SPARE C.B.	B	40	2										0.00
12	–	C	–	–										0.00
14	SPARE C.B.	A	40	2										0.00
16	–	B	–	–										0.00
18	SPARE C.B.	C	40	2										0.00
20	–	A	–	–										0.00
22	SPARE C.B.	B	40	2										0.00
24	–	C	–	–										0.00
26	SPARE C.B.	A	40	2										0.00
28	–	B	–	–										0.00
30	SPARE C.B.	C	40	2										0.00
32	–	A	–	–										0.00
34	SPARE C.B.	B	40	2										0.00
36	–	C	–	–										0.00
38		A												0.00
40		B												0.00
42		C												0.00

Specifications

Rating (Amps):	400
Voltage (L–L):	208
Phase:	3
Wire:	4
Bus Material:	Cu
Int. Rating:	22,000A
Main Lugs Only:	X
Main Ckt Brkr:	400 A
Surface Mtd:	X
Flush Mtd:	–
Bonded Gnd:	–
Isolated Gnd:	–
200% Neutral:	–
Feed Thru:	X
Double Lug:	–
Top Feed:	–
Bottom Feed	–

Feed Thru Load:	NONE
Phase A:	0.00
Phase B:	0.00
Phase C:	0.00
Total Conn.:	0.00
Load From This Panel:	
Phase A:	0.00
Phase B:	0.00
Phase C:	0.00
Total Conn.:	0.00
Total Connected Load:	
Phase A:	0.00
Phase B:	0.00
Phase C:	0.00
Total Conn.:	0.00
Total Feeder Demand Load:	
Total:	0.00 kVA
Avg. Amps/Phase:	0 A.

CATEGORY	TOTAL CONN. LOAD (kVA)	DEMAND FACTOR	DEMAND LOAD (kVA)
Receptacles	0.00	50%>10kVA	0.00
Lighting	0.00	125%	0.00
Kitchen Equipment	0.00	NEC 220.56	0.00
Motors (Largest)	0.00	125%	0.00
Motors	0.00	100%	0.00
Heating	0.00	NEC 220.60	0.00
Cooling	0.00	NEC 220.60	0.00
Continuous Load	0.00	125%	0.00
Non-Continuous Load	0.00	100%	0.00
TOTAL	0.00		0.00

General Notes:

Keyed Notes:

COFFMAN ENGINEERS, INC.

PSE OP TRAINING CENTER — PANEL SCHEDULE — NEW PANEL: NL8

221158

Location: CONTROL BUILDING — Feed Through: — Source: NL9

Ckt	Load Description	Phase	Amp	Poles	Notes	Rec.	Ltg.	Kit.	Mtr.	Htg.	Clg.	Cont.	Non.	Total
1	BATTERY HOUSE	A	20	2									0.50	0.50
3	–	B	–	–									0.50	0.50
5	RECEPT	A	20	1		0.54								0.54
7	RECEPT	B	20	1		0.72								0.72
9	RECEPT	A	20	1		0.54								0.54
11	RECEPT – WORKSTATION	B	20	1									0.20	0.20
13	LTG – CONTROL HOUSE	A	20	1			0.60							0.60
15	LTG – WALL MOUNTED	B	20	1			0.20							0.20
17	RECEPT – EXTERIOR	A	20	1		0.18								0.18
19	SPARE C.B.	B	20	1										0.00
21	DOAS–06–01/FCU–06–01	A	20	2					0.75					0.75
23	–	B	–	–					0.75					0.75
25	DOOR LOCK CONTROLLERS	A	20	1									0.20	0.20
27	SPARE C.B.	B	20	1										0.00
29	SPARE C.B.	A	20	1										0.00
31	SPARE C.B.	B	20	1										0.00
33	SPARE C.B.	A	20	1										0.00
35	SPARE C.B.	B	20	1										0.00
37	SPARE C.B.	A	20	1										0.00
39	SPARE C.B.	B	20	1										0.00
41	SPARE C.B.	A	20	1										0.00
2	TRANSFORMER 1	A	30	2									1.50	1.50
4	–	B	–	–									1.50	1.50
6	TRANSFORMER 2	A	30	2									1.50	1.50
8	–	B	–	–									1.50	1.50
10	BREAKER 1	A	20	2									0.27	0.27
12	–	B	–	–									0.27	0.27
14	BREAKER 2	A	20	2									0.27	0.27
16	–	B	–	–									0.27	0.27
18	BREAKER 3	A	20	2									0.27	0.27
20	–	B	–	–									0.27	0.27
22	BREAKER 4	A	20	2									0.27	0.27
24	–	B	–	–									0.27	0.27
26	CRCUIT SWITCHER	A	20	1									0.36	0.36
28	TRANSRUPTER	B	20	1									0.36	0.36
30	BATTERY CHARGER	A	30	2									1.64	1.64
32	–	B	–	–									1.64	1.64
34	SPARE C.B.	A	20	1										0.00
36	SPARE C.B.	B	20	1										0.00
38	SPARE C.B.	A	20	1										0.00
40	SPARE C.B.	B	20	1										0.00
42	SPARE C.B.	A	20	1										0.00

Specifications

Rating (Amps):	200
Voltage (L–L):	240
Phase:	1
Wire:	3
Bus Material:	Cu
Int. Rating:	10,000A
Main Lugs Only:	X
Main Ckt Brkr:	–
Surface Mtd:	X
Flush Mtd:	–
Bonded Gnd:	X
Isolated Gnd:	–
200% Neutral:	–
Feed Thru:	–
Double Lug:	–
Top Feed:	–
Bottom Feed	–

Feed Thru Load:	NONE
Phase A:	0.00
Phase B:	0.00
Total Conn.:	0.00
Load From This Panel:	
Phase A:	9.39
Phase B:	8.45
Total Conn.:	17.84
Total Connected Load:	
Phase A:	9.39
Phase B:	8.45
Total Conn.:	17.84
Total Feeder Demand Load:	
Total:	18.42 kVA
Avg. Amps/Phase:	77 A.

CATEGORY	TOTAL CONN. LOAD (kVA)	DEMAND FACTOR	DEMAND LOAD (kVA)
Receptacles	1.98	50%>10kVA	1.98
Lighting	0.80	125%	1.00
Kitchen Equipment	0.00	NEC 220.56	0.00
Motors (Largest)	1.50	125%	1.88
Motors	0.00	100%	0.00
Heating	0.00	NEC 220.60	0.00
Cooling	0.00	NEC 220.60	0.00
Continuous Load	0.00	125%	0.00
Non-Continuous Load	13.56	100%	13.56
TOTAL	17.84		18.42

General Notes:

1. SERVICE ENTRANCE RATED.

Keyed Notes:

COFFMAN ENGINEERS, INC.

PSE OP TRAINING CENTER — PANEL SCHEDULE — NEW PANEL: NL9

221158

Location: MAIN ELECTRICAL ROOM — Feed Through: — Source: MSS1

Ckt	Load Description	Phase	Amp	Poles	Notes	Rec.	Ltg.	Kit.	Mtr.	Htg.	Clg.	Cont.	Non.	Total
1	DRYER 1	A	30	2									2.25	2.25
3	–	B	–	–									2.25	2.25
5	DRYER 2	A	30	2									2.25	2.25
7	–	B	–	–									2.25	2.25
9	RANGE 1	A	50	2									6.00	6.00
11	–	B	–	–									6.00	6.00
13	RANGE 2	A	50	2									6.00	6.00
15	–	B	–	–									6.00	6.00
17	SPARE C.B.	A	20	1										0.00
19	SPARE C.B.	B	20	1										0.00
21	SPARE C.B.	A	20	1										0.00
23	SPARE C.B.	B	20	1										0.00
25	SPARE C.B.	A	20	1										0.00
27	SPARE C.B.	B	20	1										0.00
29	SPARE C.B.	A	20	1										0.00
31	SPARE C.B.	B	20	1										0.00
33	SPARE C.B.	A	20	1										0.00
35	SPARE C.B.	B	20	1										0.00
37	SPARE C.B.	A	20	1										0.00
39	NL8	B	200	2		1.26	0.60	0.00	0.75	0.00	0.00	0.00	6.78	9.39
41	–	A	–	–		0.72	0.20	0.00	0.75	0.00	0.00	0.00	6.78	8.45
2	SPARE C.B.	A	20	1										0.00
4	SPARE C.B.	B	20	1										0.00
6	SPARE C.B.	A	20	1										0.00
8	SPARE C.B.	B	20	1										0.00
10	SPARE C.B.	A	20	1										0.00
12	SPARE C.B.	B	20	1										0.00
14	SPARE C.B.	A	20	1										0.00
16	SPARE C.B.	B	20	1										0.00
18	SPARE C.B.	A	20	1										0.00
20	SPARE C.B.	B	20	1										0.00
22	SPARE C.B.	A	20	1										0.00
24	SPARE C.B.	B	20	1										0.00
26	SPARE C.B.	A	20	1										0.00
28	SPARE C.B.	B	20	1										0.00
30	SPARE C.B.	A	20	1										0.00
32	SPARE C.B.	B	20	1										0.00
34	SPARE C.B.	A	20	1										0.00
36	SPARE C.B.	B	20	1										0.00
38	SPARE C.B.	A	20	1										0.00
40	SPD	B	20	2										0.00
42	–	A	–	–										0.00

Specifications

Rating (Amps):	400
Voltage (L–L):	240
Phase:	1
Wire:	3
Bus Material:	Cu
Int. Rating:	10,000A
Main Lugs Only:	–
Main Ckt Brkr:	400

PRCNC20240216

ZERVAS
ARCHITECTURE | INTERIOR DESIGN
zervasgroup.com
209 Prospect Street
Bellingham, WA 98225
360.734.4744

COFFMAN ENGINEERS
1101 2nd Avenue,
Suite 400
Seattle, WA 98101
ph 206.623.0717
www.coffman.com

CHRISTOPHER J. BAKER — STATE OF WASHINGTON — 31344 — REGISTERED PROFESSIONAL ENGINEER
1/25/2024

City of Puyallup
Development & Permitting Services
ISSUED PERMIT
Building | Planning | Engineering | Public Works | Fire | Traffic

PSE OP TRAINING CENTER — PANEL SCHEDULE — NEW PANEL: NL10

221158

Location: MAIN ELECTRICAL ROOM — Feed Through: — Source: MSS2

Ckt	Load Description	Phase	Amp	Poles	Notes	Rec.	Ltg.	Kit.	Mtr.	Htg.	Clg.	Cont.	Non.	Total
1	LTG – EXTERIOR	A	20	1			0.10							0.10
3	RECEPT – AIR COMPRESSOR	B	20	1		0.36								0.36
5	LTG – INTERIOR	C	20	1			0.10							0.10
7	SPARE C.B.	A	20	1									1.00	1.00
9	SPARE C.B.	B	20	1										0.00
11	SPARE C.B.	C	20	1										0.00
13		A												0.00
15		B												0.00
17		C												0.00
19		A												0.00
21		B												0.00
23		C												0.00
25		A												0.00
27		B												0.00
29		C												0.00
31		A												0.00
33		B												0.00
35		C												0.00
37		A												0.00
39		B												0.00
41		C												0.00
2	SPARE C.B.	A	20	1										0.00
4	SPARE C.B.	B	20	1										0.00
6	SPARE C.B.	C	20	1										0.00
8	SPARE C.B.	A	20	1										0.00
10	SPARE C.B.	B	20	1										0.00
12	SPARE C.B.	C	20	1										0.00
14		A												0.00
16		B												0.00
18		C												0.00
20		A												0.00
22		B												0.00
24		C												0.00
26		A												0.00
28		B												0.00
30		C												0.00
32		A												0.00
34		B												0.00
36		C												0.00
38		A												0.00
40		B												0.00
42		C												0.00

Specifications

Rating (Amps):	200
Voltage (L–L):	208
Phase:	3
Wire:	4
Bus Material:	Cu
Int. Rating:	22,000A
Main Lugs Only:	X
Main Ckt Brkr:	–
Surface Mtd:	X
Flush Mtd:	–
Bonded Gnd:	X
Isolated Gnd:	–
200% Neutral:	–
Feed Thru:	–
Double Lug:	–
Top Feed:	–
Bottom Feed	–

Feed Thru Load:	NONE
Phase A:	0.00
Phase B:	0.36
Phase C:	0.10
Total Conn.:	0.56
Load From This Panel:	
Phase A:	0.10
Phase B:	0.36
Phase C:	0.10
Total Conn.:	0.56
Total Connected Load:	
Phase A:	0.10
Phase B:	0.36
Phase C:	0.10
Total Conn.:	0.56
Total Feeder Demand Load:	
Total:	0.61 KVA
Avg. Amps/Phase:	2 A

CATEGORY	TOTAL CONN. LOAD (KVA)	DEMAND FACTOR	DEMAND LOAD (KVA)
Receptacles	0.36	50%>10KVA	0.36
Lighting	0.20	125%	0.25
Kitchen Equipment	0.00	NEC 220.56	0.00
Motors (Largest)	0.00	125%	0.00
Motors	0.00	100%	0.00
Heating	0.00	NEC 220.60	0.00
Cooling	0.00	NEC 220.60	0.00
Continuous Load	0.00	125%	0.00
Non-Continuous Load	0.00	100%	0.00
TOTAL	0.56		0.61

General Notes:

1. SERVICE ENTRANCE RATED.

Keyed Notes:

COFFMAN ENGINEERS, INC.

PSE OP TRAINING CENTER — PANEL SCHEDULE — NEW PANEL: R

221158

Location: Residential Village — Feed Through: — Source: Utility

Ckt	Load Description	Phase	Amp	Poles	Notes	Rec.	Ltg.	Kit.	Mtr.	Htg.	Clg.	Cont.	Non.	Total
1	RLC1	A	200	2		0.00	0.00	0.00	0.00	0.00	0.00	0.00	8.65	8.65
3	–	B	–	–		0.00	0.00	0.00	0.00	0.00	0.00	0.00	8.65	8.65
5	RLC2	A	200	2		0.00	0.00	0.00	0.00	0.00	0.00	0.00	8.65	8.65
7	–	B	–	–		0.00	0.00	0.00	0.00	0.00	0.00	0.00	8.65	8.65
9	RLC3	A	200	2		0.00	0.00	0.00	0.00	0.00	0.00	0.00	8.65	8.65
11	–	B	–	–		0.00	0.00	0.00	0.00	0.00	0.00	0.00	8.65	8.65
13	RLC4	A	200	2		0.00	0.00	0.00	0.00	0.00	0.00	0.00	8.65	8.65
15	–	B	–	–		0.00	0.00	0.00	0.00	0.00	0.00	0.00	8.65	8.65
17	SPARE C.B.	A	200	2										0.00
19	–	B	–	–										0.00
21	SPARE C.B.	A	200	2										0.00
23	–	B	–	–										0.00
25		A												0.00
27		B												0.00
29		A												0.00
31		B												0.00
33		A												0.00
35		B												0.00
37		A												0.00
39		B												0.00
41		A												0.00
2	RLC5	A	200	2		0.00	0.00	0.00	0.00	0.00	0.00	0.00	8.65	8.65
4	–	B	–	–		0.00	0.00	0.00	0.00	0.00	0.00	0.00	8.65	8.65
6	RLC6	A	200	2		0.00	0.00	0.00	0.00	0.00	0.00	0.00	8.65	8.65
8	–	B	–	–		0.00	0.00	0.00	0.00	0.00	0.00	0.00	8.65	8.65
10	RLC7	A	200	2		0.00	0.00	0.00	0.00	0.00	0.00	0.00	8.65	8.65
12	–	B	–	–		0.00	0.00	0.00	0.00	0.00	0.00	0.00	8.65	8.65
14	RLC8	A	200	2		0.00	0.00	0.00	0.00	0.00	0.00	0.00	8.65	8.65
16	–	B	–	–		0.00	0.00	0.00	0.00	0.00	0.00	0.00	8.65	8.65
18	SPARE C.B.	A	200	2										0.00
20	–	B	–	–										0.00
22	SPARE C.B.	A	200	2										0.00
24	–	B	–	–										0.00
26		A												0.00
28		B												0.00
30		A												0.00
32		B												0.00
34		A												0.00
36		B												0.00
38		A												0.00
40		B												0.00
42		A												0.00

Specifications

Rating (Amps):	800
Voltage (L–L):	240
Phase:	1
Wire:	3
Bus Material:	Cu
Int. Rating:	22,000A
Main Lugs Only:	–
Main Ckt Brkr:	800 A
Surface Mtd:	X
Flush Mtd:	–
Bonded Gnd:	X
Isolated Gnd:	–
200% Neutral:	–
Feed Thru:	–
Double Lug:	–
Top Feed:	–
Bottom Feed	–

Feed Thru Load:	NONE
Phase A:	0.00
Phase B:	0.00
Total Conn.:	0.00
Load From This Panel:	
Phase A:	69.20
Phase B:	69.20
Total Conn.:	138.40
Total Connected Load:	
Phase A:	69.20
Phase B:	69.20
Total Conn.:	138.40
Total Feeder Demand Load:	
Total:	138.40 KVA
Avg. Amps/Phase:	577 A

CATEGORY	TOTAL CONN. LOAD (KVA)	DEMAND FACTOR	DEMAND LOAD (KVA)
Receptacles	0.00	50%>10KVA	0.00
Lighting	0.00	125%	0.00
Kitchen Equipment	0.00	NEC 220.56	0.00
Motors (Largest)	0.00	125%	0.00
Motors	0.00	100%	0.00
Heating	0.00	NEC 220.60	0.00
Cooling	0.00	NEC 220.60	0.00
Continuous Load	0.00	125%	0.00
Non-Continuous Load	138.40	100%	138.40
TOTAL	138.40		138.40

General Notes:

1. NEMA 3R Service Entrance Rated.

Keyed Notes:

COFFMAN ENGINEERS, INC.

PSE OP TRAINING CENTER — PANEL SCHEDULE — NEW PANEL: RLC1

221158

Location: Residential Village — Feed Through: — Source: R

Ckt	Load Description	Phase	Amp	Poles	Notes	Rec.	Ltg.	Kit.	Mtr.	Htg.	Clg.	Cont.	Non.	Total
1	RANGE	A	50	2	1								6.00	6.00
3	–	B	–	–									6.00	6.00
5	HEAT PUMP	A	20	2	1								1.00	1.00
7	–	B	–	–									1.00	1.00
9	SPARE C.B.	A	30	2	1									0.00
11	–	B	–	–										0.00
13	SPARE C.B.	A	20	1	1									0.00
15	SPARE C.B.	B	20	1	1									0.00
17	SPARE C.B.	A	20	1	1									0.00
19	SPARE C.B.	B	20	1	1									0.00
21	SPARE C.B.	A	20	1	1									0.00
23	SPARE C.B.	B	20	1	1									0.00
25		A												0.00
27		B												0.00
29		A												0.00
31		B												0.00
33		A												0.00
35		B												0.00
37		A												0.00
39		B												0.00
41		A												0.00
2	LIGHTING	A	20	1	1								0.15	0.15
4	RECEPTACLES	B	20	1	1								0.15	0.15
6	APPLIANCE	A	20	1	1								1.50	1.50
8	APPLIANCE	B	20	1	1								1.50	1.50
10	SPARE C.B.	A	20	1	1									0.00
12	SPARE C.B.	B	20	1	1									0.00
14	SPARE C.B.	A	20	1	1									0.00
16	SPARE C.B.	B	20	1	1									0.00
18	SPARE C.B.	A	20	1	1									0.00
20	SPARE C.B.	B	20	1	1									0.00
22	SPARE C.B.	A	20	1	1									0.00
24	SPARE C.B.	B	20	1	1									0.00
26		A												0.00
28		B												0.00
30		A												0.00
32		B												0.00
34		A												0.00
36		B												0.00
38		A												0.00
40		B												0.00
42		A												0.00

Specifications

Rating (Amps):	200
Voltage (L–L):	240
Phase:	1
Wire:	3
Bus Material:	Cu
Int. Rating:	10,000A
Main Lugs Only:	–
Main Ckt Brkr:	200 A
Surface Mtd:	X
Flush Mtd:	–
Bonded Gnd:	X
Isolated Gnd:	–
200% Neutral:	–
Feed Thru:	–
Double Lug:	–
Top Feed:	–
Bottom Feed	–

Feed Thru Load:	NONE
Phase A:	0.00
Phase B:	0.00
Total Conn.:	0.00
Load From This Panel:	
Phase A:	8.65
Phase B:	8.65
Total Conn.:	17.30
Total Connected Load:	
Phase A:	8.65
Phase B:	8.65
Total Conn.:	17.30
Total Feeder Demand Load:	
Total:	17.30 KVA
Avg. Amps/Phase:	72 A

CATEGORY	TOTAL CONN. LOAD (KVA)	DEMAND FACTOR	DEMAND LOAD (KVA)
Receptacles	0.00	50%>10KVA	0.00
Lighting	0.00	125%	0.00
Kitchen Equipment	0.00	NEC 220.56	0.00
Motors (Largest)	0.00	125%	0.00
Motors	0.00	100%	0.00
Heating	0.00	NEC 220.60	0.00
Cooling	0.00	NEC 220.60	0.00
Continuous Load	0.00	125%	0.00
Non-Continuous Load	17.30	100%	17.30
TOTAL	17.30		17.30

General Notes:

1. Typical Residential Load Center.

Keyed Notes:

1. Combination Arc Fault / GFCI circuit breaker.

COFFMAN ENGINEERS, INC.

PSE OP TRAINING CENTER — PANEL SCHEDULE — NEW PANEL: RLC2

221158

Location: Residential Village — Feed Through: — Source: R

Ckt	Load Description	Phase	Amp	Poles	Notes	Rec.	Ltg.	Kit.	Mtr.	Htg.	Clg.	Cont.	Non.	Total
1	RANGE	A	50	2	1								6.00	6.00
3	–	B	–	–									6.00	6.00
5	HEAT PUMP	A	20	2	1								1.00	1.00
7	–	B	–	–									1.00	1.00
9	SPARE C.B.	A	30	2	1									0.00
11	–	B	–	–										0.00
13	SPARE C.B.	A	20	1	1									0.00
15	SPARE C.B.	B	20	1	1									0.00
17	SPARE C.B.	A	20	1	1									0.00
19	SPARE C.B.	B	20	1	1									0.00
21	SPARE C.B.	A	20	1	1									0.00
23	SPARE C.B.	B	20	1	1									0.00
25		A												0.00
27		B												0.00
29		A												0.00
31		B												0.00
33		A												0.00
35		B												0.00
37		A												0.00
39		B												0.00
41		A												0.00
2	LIGHTING	A	20	1	1								0.15	0.15
4	RECEPTACLES	B	20	1	1								0.15	0.15
6	APPLIANCE	A	20	1	1								1.50	1.50
8	APPLIANCE	B	20	1	1								1.50	1.50
10	SPARE C.B.	A	20	1	1									0.00
12	SPARE C.B.	B	20	1	1									0.00
14	SPARE C.B.	A	20	1	1									0.00
16	SPARE C.B.	B	20	1	1									0.00
18	SPARE C.B.	A	20	1	1									0.00
20	SPARE C.B.	B	20	1	1									0.00
22	SPARE C.B.	A	20	1	1									0.00
24	SPARE C.B.	B	20	1	1									0.00
26		A												0.00
28		B												0.00
30		A												0.00
32		B												0.00
34		A												0.00
36		B												0.00
38		A												0.00
40		B												0.00
42		A												0.00

Specifications

Rating (Amps):	200
Voltage (L–L):	240
Phase:	1
Wire:	3
Bus Material:	Cu
Int. Rating:	10,000A
Main Lugs Only:	–
Main Ckt Brkr:	200 A
Surface Mtd:	X
Flush Mtd:	–
Bonded Gnd:	X
Isolated Gnd:	–
200% Neutral:	–
Feed Thru:	–
Double Lug:	–
Top Feed:	–
Bottom Feed	–

Feed Thru Load:	NONE
Phase A:	0.00
Phase B:	0.00
Total Conn.:	0.00
Load From This Panel:	
Phase A:	8.65
Phase B:	8.65
Total Conn.:	17.30
Total Connected Load:	
Phase A:	8.65
Phase B:	8.65
Total Conn.:	17.30
Total Feeder Demand Load:	
Total:	17.30 KVA
Avg. Amps/Phase:	72 A

CATEGORY	TOTAL CONN. LOAD (KVA)	DEMAND FACTOR	DEMAND LOAD (KVA)
Receptacles	0.00	50%>10KVA	0.00
Lighting	0.00	125%	0.00
Kitchen Equipment	0.00	NEC 220.56	0.00
Motors (Largest)	0.00	125%	0.00
Motors	0.00	100%	0.00
Heating	0.00	NEC 220.60	0.00
Cooling	0.00	NEC 220.60	0.00
Continuous Load	0.00	125%	0.00
Non-Continuous Load	17.30	100%	17.30
TOTAL	17.30		17.30

General Notes:

1. Typical Residential Load Center.

Keyed Notes:

1. Combination Arc Fault / GFCI circuit breaker.

COFFMAN ENGINEERS, INC.

PSE OP TRAINING CENTER — PANEL SCHEDULE — NEW PANEL: RLC3

221158

Location: Residential Village — Feed Through: — Source: R

Ckt	Load Description	Phase	Amp	Poles	Notes	Rec.	Ltg.	Kit.	Mtr.	Htg.	Clg.	Cont.	Non.	Total
1	RANGE	A	50	2	1								6.00	6.00
3	–	B	–	–									6.00	6.00
5	HEAT PUMP	A	20	2	1								1.00	1.00
7	–	B	–	–									1.00	1.00
9	SPARE C.B.	A	30	2	1									0.00
11	–	B	–	–										0.00
13	SPARE C.B.	A	20	1	1									0.00
15	SPARE C.B.	B	20	1	1									0.00
17	SPARE C.B.	A	20	1	1									0.00
19	SPARE C.B.	B	20	1	1									0.00
21	SPARE C.B.	A	20	1	1									0.00
23	SPARE C.B.	B	20	1	1									0.00
25		A												0.00
27		B												0.00
29		A												0.00
31		B												0.00
33		A												0.00
35		B												0.00
37		A												0.00
39		B												0.00
41		A												0.00
2	LIGHTING	A	20	1	1								0.15	0.15
4	RECEPTACLES	B	20	1	1								0.15	0.15
6	APPLIANCE	A	20	1	1								1.50	1.50
8	APPLIANCE	B	20	1	1								1.50	1.50
10	SPARE C.B.	A	20	1	1									0.00
12	SPARE C.B.	B	20	1	1									0.00
14	SPARE C.B.	A	20	1	1									0.00
16	SPARE C.B.	B	20	1	1									0.00
18	SPARE C.B.	A	20	1	1									0.00
20	SPARE C.B.	B	20	1	1									0.00
22	SPARE C.B.	A	20	1	1									0.00
24	SPARE C.B.	B	20	1	1									0.00
26		A												0.00
28		B												0.00
30		A												0.00
32		B												0.00
34		A												0.00
36		B												0.00
38		A												0.00
40		B												0.00
42		A												0.00

Specifications

Rating (Amps):	200
Voltage (L–L):	240
Phase:	1
Wire:	3
Bus Material:	Cu
Int. Rating:	10,000A
Main Lugs Only:	–
Main Ckt Brkr:	200 A
Surface Mtd:	X
Flush Mtd:	–
Bonded Gnd:	X
Isolated Gnd:	–
200% Neutral:	–
Feed Thru:	–
Double Lug:	–
Top Feed:	–
Bottom Feed	–

Feed Thru Load:	NONE
Phase A:	0.00
Phase B:	0.00
Total Conn.:	0.00
Load From This Panel:	
Phase A:	8.65
Phase B:	8.65
Total Conn.:	17.30
Total Connected Load:	
Phase A:	8.65
Phase B:	8.65
Total Conn.:	17.30
Total Feeder Demand Load:	
Total:	17.30 KVA
Avg. Amps/Phase:	72 A

CATEGORY	TOTAL CONN. LOAD (KVA)	DEMAND FACTOR	DEMAND LOAD (KVA)
Receptacles	0.00	50%>10KVA	0.00
Lighting	0.00	125%	0.00
Kitchen Equipment	0.00	NEC 220.56	0.00
Motors (Largest)	0.00	125%	0.00
Motors	0.00	100%	0.00
Heating	0.00	NEC 220.60	0.00
Cooling	0.00	NEC 220.60	0.00
Continuous Load	0.00	125%	0.00
Non-Continuous Load	17.30	100%	17.30
TOTAL	17.30		17.30

General Notes:

1. Typical Residential Load Center.

Keyed Notes:

1. Combination Arc Fault / GFCI circuit breaker.

COFFMAN ENGINEERS, INC.

PSE OP TRAINING CENTER — PANEL SCHEDULE — NEW PANEL: RLC4

221158

Location: Residential Village — Feed Through: — Source: R

Ckt	Load Description	Phase	Amp	Poles	Notes	Rec.	Ltg.	Kit.	Mtr.	Htg.	Clg.	Cont.	Non.	Total
1	RANGE	A	50	2	1								6.00	6.00
3	–	B	–	–									6.00	6.00
5	HEAT PUMP	A	20	2	1								1.00	1.00
7	–	B	–	–									1.00	1.00
9	SPARE C.B.	A	30	2	1									0.00
11	–	B	–	–										0.00
13	SPARE C.B.	A	20	1	1									0.00
15	SPARE C.B.	B	20	1	1									0.00
17	SPARE C.B.	A	20	1	1									0.00
19	SPARE C.B.	B	20	1	1									0.00
21	SPARE C.B.	A	20	1	1									0.00
23	SPARE C.B.	B	20	1	1									0.00
25		A												0.00
27		B												0.00
29		A												0.00
31		B												0.00
33		A												0.00
35		B												0.00
37		A												0.00
39		B												0.00
41		A												0.00
2	LIGHTING	A	20	1	1								0.15	0.15
4	RECEPTACLES	B	20	1	1								0.15	0.15
6	APPLIANCE	A	20	1	1								1.50	1.50
8	APPLIANCE	B	20	1	1								1.50	1.50
10	SPARE C.B.	A	20	1	1									0.00
12	SPARE C.B.	B	20	1	1									0.00
14	SPARE C.B.	A	20	1	1									0.00
16	SPARE C.B.	B	20	1	1									0.00
18	SPARE C.B.	A	20	1	1									0.00
20	SPARE C.B.	B	20	1	1									0.00
22	SPARE C.B.	A	20	1	1									0.00
24	SPARE C.B.	B	20	1	1									0.00
26		A												0.00
28		B												0.00
30		A												0.00
32		B												0.00
34		A												0.00
36		B												0.00
38		A												0.00
40		B												0.00
42		A												0.00

Specifications

Rating (Amps):	200
Voltage (L–L):	240
Phase:	1
Wire:	3
Bus Material:	Cu
Int. Rating:	10,000A
Main Lugs Only:	–
Main Ckt Brkr:	200 A
Surface Mtd:	X
Flush Mtd:	–
Bonded Gnd:	X
Isolated Gnd:	–
200% Neutral:	–
Feed Thru:	–
Double Lug:	–
Top Feed:	–
Bottom Feed	–

Feed Thru Load:	NONE
Phase A:	0.00
Phase B:	0.00
Total Conn.:	0.00
Load From This Panel:	
Phase A:	8.65
Phase B:	8.65
Total Conn.:	17.30
Total Connected Load:	
Phase A:	8.65
Phase B:	8.65
Total Conn.:	17.30
Total Feeder Demand Load:	
Total:	17.30 KVA
Avg. Amps/Phase:	72 A

CATEGORY	TOTAL CONN. LOAD (KVA)	DEMAND FACTOR	DEMAND LOAD (KVA)
Receptacles	0.00	50%>10KVA	0.00
Lighting	0.00	125%	0.00
Kitchen Equipment	0.00	NEC 220.56	0.00
Motors (Largest)	0.00	125%	0.00
Motors	0.00	100%	0.00
Heating	0.00	NEC 220.60	0.00
Cooling	0.00	NEC 220.60	0.00
Continuous Load	0.00	125%	0.00
Non-Continuous Load	17.30	100%	17.30
TOTAL	17.30		17.30

General Notes:

1. Typical Residential Load Center.

Keyed Notes:

1. Combination Arc Fault / GFCI circuit breaker.

COFFMAN ENGINEERS, INC.

100% CD SET

REV	ISSUED FOR	DATE

SCALE: NONE

PSE - OPERATIONAL TRAINING CENTER

PANEL SCHEDULES

PROJECT No:	221158
DRAWN BY:	RMF
CHECKED BY:	CJB
DATE ISSUED:	01/26/24

E6.05

© 2022

PRCNC20240216

ZERVAS
ARCHITECTURE | INTERIOR DESIGN
zervasgroup.com
209 Prospect Street
Bellingham, WA 98225
360.734.4744

COFFMAN ENGINEERS
1101 2nd Avenue,
Suite 400
Seattle, WA 98101
ph 206.623.0717
www.coffman.com

CHRISTOPHER J. BAKER — STATE OF WASHINGTON — 31344 — REGISTERED PROFESSIONAL ENGINEER
1/25/2024

City of Puyallup
Development & Permitting Services
ISSUED PERMIT
Building | Planning | Engineering | Public Works | Fire | Traffic

PSE OP TRAINING CENTER — PANEL SCHEDULE — NEW PANEL: RLC5

221158

Location: Residential Village — Feed Through: — Source: R

Ckt	Load Description	Phase	Amp	Poles	Notes	Rec.	Ltg.	Kit.	Mtr.	Htg.	Clg.	Cont.	Non.	Total
1	RANGE	A	50	2	1								6.00	6.00
3	–	B	–	–									6.00	6.00
5	HEAT PUMP	A	20	2	1								1.00	1.00
7	–	B	–	–									1.00	1.00
9	SPARE C.B.	A	30	2	1									0.00
11	–	B	–	–										0.00
13	SPARE C.B.	A	20	1	1									0.00
15	SPARE C.B.	B	20	1	1									0.00
17	SPARE C.B.	A	20	1	1									0.00
19	SPARE C.B.	B	20	1	1									0.00
21	SPARE C.B.	A	20	1	1									0.00
23	SPARE C.B.	B	20	1	1									0.00
25		A												0.00
27		B												0.00
29		A												0.00
31		B												0.00
33		A												0.00
35		B												0.00
37		A												0.00
39		B												0.00
41		A												0.00
2	LIGHTING	A	20	1	1								0.15	0.15
4	RECEPTACLES	B	20	1	1								0.15	0.15
6	APPLIANCE	A	20	1	1								1.50	1.50
8	APPLIANCE	B	20	1	1								1.50	1.50
10	SPARE C.B.	A	20	1	1									0.00
12	SPARE C.B.	B	20	1	1									0.00
14	SPARE C.B.	A	20	1	1									0.00
16	SPARE C.B.	B	20	1	1									0.00
18	SPARE C.B.	A	20	1	1									0.00
20	SPARE C.B.	B	20	1	1									0.00
22	SPARE C.B.	A	20	1	1									0.00
24	SPARE C.B.	B	20	1	1									0.00
26		A												0.00
28		B												0.00
30		A												0.00
32		B												0.00
34		A												0.00
36		B												0.00
38		A												0.00
40		B												0.00
42		A												0.00

Specifications

Rating (Amps):	200
Voltage (L–L):	240
Phase:	1
Wire:	3
Bus Material:	Cu
Int. Rating:	10,000A
Main Lugs Only:	–
Main Ckt Brkr:	200 A
Surface Mtd:	X
Flush Mtd:	–
Bonded Gnd:	X
Isolated Gnd:	–
200% Neutral:	–
Feed Thru:	–
Double Lug:	–
Top Feed:	–
Bottom Feed	–

Feed Thru Load:	NONE
Phase A:	0.00
Phase B:	0.00
Total Conn.:	0.00
Load From This Panel:	
Phase A:	8.65
Phase B:	8.65
Total Conn.:	17.30
Total Connected Load:	
Phase A:	8.65
Phase B:	8.65
Total Conn.:	17.30
Total Feeder Demand Load:	
Total:	17.30 kVA
Avg. Amps/Phase:	72 A.

CATEGORY	TOTAL CONN. LOAD (kVA)	DEMAND FACTOR	DEMAND LOAD (kVA)
Receptacles	0.00	50%>10kVA	0.00
Lighting	0.00	125%	0.00
Kitchen Equipment	0.00	NEC 220.56	0.00
Motors (Largest)	0.00	125%	0.00
Motors	0.00	100%	0.00
Heating	0.00	NEC 220.60	0.00
Cooling	0.00	NEC 220.60	0.00
Continuous Load	0.00	125%	0.00
Non-Continuous Load	17.30	100%	17.30
TOTAL	17.30		17.30

General Notes:

1. Typical Residential Load Center.

Keyed Notes:

1. Combination Arc Fault / GFCI circuit breaker.

COFFMAN ENGINEERS, INC.

PSE OP TRAINING CENTER — PANEL SCHEDULE — NEW PANEL: RLC6

221158

Location: Residential Village — Feed Through: — Source: R

Ckt	Load Description	Phase	Amp	Poles	Notes	Rec.	Ltg.	Kit.	Mtr.	Htg.	Clg.	Cont.	Non.	Total
1	RANGE	A	50	2	1								6.00	6.00
3	–	B	–	–									6.00	6.00
5	HEAT PUMP	A	20	2	1								1.00	1.00
7	–	B	–	–									1.00	1.00
9	SPARE C.B.	A	30	2	1									0.00
11	–	B	–	–										0.00
13	SPARE C.B.	A	20	1	1									0.00
15	SPARE C.B.	B	20	1	1									0.00
17	SPARE C.B.	A	20	1	1									0.00
19	SPARE C.B.	B	20	1	1									0.00
21	SPARE C.B.	A	20	1	1									0.00
23	SPARE C.B.	B	20	1	1									0.00
25		A												0.00
27		B												0.00
29		A												0.00
31		B												0.00
33		A												0.00
35		B												0.00
37		A												0.00
39		B												0.00
41		A												0.00
2	LIGHTING	A	20	1	1								0.15	0.15
4	RECEPTACLES	B	20	1	1								0.15	0.15
6	APPLIANCE	A	20	1	1								1.50	1.50
8	APPLIANCE	B	20	1	1								1.50	1.50
10	SPARE C.B.	A	20	1	1									0.00
12	SPARE C.B.	B	20	1	1									0.00
14	SPARE C.B.	A	20	1	1									0.00
16	SPARE C.B.	B	20	1	1									0.00
18	SPARE C.B.	A	20	1	1									0.00
20	SPARE C.B.	B	20	1	1									0.00
22	SPARE C.B.	A	20	1	1									0.00
24	SPARE C.B.	B	20	1	1									0.00
26		A												0.00
28		B												0.00
30		A												0.00
32		B												0.00
34		A												0.00
36		B												0.00
38		A												0.00
40		B												0.00
42		A												0.00

Specifications

Rating (Amps):	200
Voltage (L–L):	240
Phase:	1
Wire:	3
Bus Material:	Cu
Int. Rating:	10,000A
Main Lugs Only:	–
Main Ckt Brkr:	200 A
Surface Mtd:	X
Flush Mtd:	–
Bonded Gnd:	X
Isolated Gnd:	–
200% Neutral:	–
Feed Thru:	–
Double Lug:	–
Top Feed:	–
Bottom Feed	–

Feed Thru Load:	NONE
Phase A:	0.00
Phase B:	0.00
Total Conn.:	0.00
Load From This Panel:	
Phase A:	8.65
Phase B:	8.65
Total Conn.:	17.30
Total Connected Load:	
Phase A:	8.65
Phase B:	8.65
Total Conn.:	17.30
Total Feeder Demand Load:	
Total:	17.30 kVA
Avg. Amps/Phase:	72 A.

CATEGORY	TOTAL CONN. LOAD (kVA)	DEMAND FACTOR	DEMAND LOAD (kVA)
Receptacles	0.00	50%>10kVA	0.00
Lighting	0.00	125%	0.00
Kitchen Equipment	0.00	NEC 220.56	0.00
Motors (Largest)	0.00	125%	0.00
Motors	0.00	100%	0.00
Heating	0.00	NEC 220.60	0.00
Cooling	0.00	NEC 220.60	0.00
Continuous Load	0.00	125%	0.00
Non-Continuous Load	17.30	100%	17.30
TOTAL	17.30		17.30

General Notes:

1. Typical Residential Load Center.

Keyed Notes:

1. Combination Arc Fault / GFCI circuit breaker.

COFFMAN ENGINEERS, INC.

PSE OP TRAINING CENTER — PANEL SCHEDULE — NEW PANEL: RLC7

221158

Location: Residential Village — Feed Through: — Source: R

Ckt	Load Description	Phase	Amp	Poles	Notes	Rec.	Ltg.	Kit.	Mtr.	Htg.	Clg.	Cont.	Non.	Total
1	RANGE	A	50	2	1								6.00	6.00
3	–	B	–	–									6.00	6.00
5	HEAT PUMP	A	20	2	1								1.00	1.00
7	–	B	–	–									1.00	1.00
9	SPARE C.B.	A	30	2	1									0.00
11	–	B	–	–										0.00
13	SPARE C.B.	A	20	1	1									0.00
15	SPARE C.B.	B	20	1	1									0.00
17	SPARE C.B.	A	20	1	1									0.00
19	SPARE C.B.	B	20	1	1									0.00
21	SPARE C.B.	A	20	1	1									0.00
23	SPARE C.B.	B	20	1	1									0.00
25		A												0.00
27		B												0.00
29		A												0.00
31		B												0.00
33		A												0.00
35		B												0.00
37		A												0.00
39		B												0.00
41		A												0.00
2	LIGHTING	A	20	1	1								0.15	0.15
4	RECEPTACLES	B	20	1	1								0.15	0.15
6	APPLIANCE	A	20	1	1								1.50	1.50
8	APPLIANCE	B	20	1	1								1.50	1.50
10	SPARE C.B.	A	20	1	1									0.00
12	SPARE C.B.	B	20	1	1									0.00
14	SPARE C.B.	A	20	1	1									0.00
16	SPARE C.B.	B	20	1	1									0.00
18	SPARE C.B.	A	20	1	1									0.00
20	SPARE C.B.	B	20	1	1									0.00
22	SPARE C.B.	A	20	1	1									0.00
24	SPARE C.B.	B	20	1	1									0.00
26		A												0.00
28		B												0.00
30		A												0.00
32		B												0.00
34		A												0.00
36		B												0.00
38		A												0.00
40		B												0.00
42		A												0.00

Specifications

Rating (Amps):	200
Voltage (L–L):	240
Phase:	1
Wire:	3
Bus Material:	Cu
Int. Rating:	10,000A
Main Lugs Only:	–
Main Ckt Brkr:	200 A
Surface Mtd:	X
Flush Mtd:	–
Bonded Gnd:	X
Isolated Gnd:	–
200% Neutral:	–
Feed Thru:	–
Double Lug:	–
Top Feed:	–
Bottom Feed	–

Feed Thru Load:	NONE
Phase A:	0.00
Phase B:	0.00
Total Conn.:	0.00
Load From This Panel:	
Phase A:	8.65
Phase B:	8.65
Total Conn.:	17.30
Total Connected Load:	
Phase A:	8.65
Phase B:	8.65
Total Conn.:	17.30
Total Feeder Demand Load:	
Total:	17.30 kVA
Avg. Amps/Phase:	72 A.

CATEGORY	TOTAL CONN. LOAD (kVA)	DEMAND FACTOR	DEMAND LOAD (kVA)
Receptacles	0.00	50%>10kVA	0.00
Lighting	0.00	125%	0.00
Kitchen Equipment	0.00	NEC 220.56	0.00
Motors (Largest)	0.00	125%	0.00
Motors	0.00	100%	0.00
Heating	0.00	NEC 220.60	0.00
Cooling	0.00	NEC 220.60	0.00
Continuous Load	0.00	125%	0.00
Non-Continuous Load	17.30	100%	17.30
TOTAL	17.30		17.30

General Notes:

1. Typical Residential Load Center.

Keyed Notes:

1. Combination Arc Fault / GFCI circuit breaker.

COFFMAN ENGINEERS, INC.

PSE OP TRAINING CENTER — PANEL SCHEDULE — NEW PANEL: RLC8

221158

Location: Residential Village — Feed Through: — Source: R

Ckt	Load Description	Phase	Amp	Poles	Notes	Rec.	Ltg.	Kit.	Mtr.	Htg.	Clg.	Cont.	Non.	Total
1	RANGE	A	50	2	1								6.00	6.00
3	–	B	–	–									6.00	6.00
5	HEAT PUMP	A	20	2	1								1.00	1.00
7	–	B	–	–									1.00	1.00
9	SPARE C.B.	A	30	2	1									0.00
11	–	B	–	–										0.00
13	SPARE C.B.	A	20	1	1									0.00
15	SPARE C.B.	B	20	1	1									0.00
17	SPARE C.B.	A	20	1	1									0.00
19	SPARE C.B.	B	20	1	1									0.00
21	SPARE C.B.	A	20	1	1									0.00
23	SPARE C.B.	B	20	1	1									0.00
25		A												0.00
27		B												0.00
29		A												0.00
31		B												0.00
33		A												0.00
35		B												0.00
37		A												0.00
39		B												0.00
41		A												0.00
2	LIGHTING	A	20	1	1								0.15	0.15
4	RECEPTACLES	B	20	1	1								0.15	0.15
6	APPLIANCE	A	20	1	1								1.50	1.50
8	APPLIANCE	B	20	1	1								1.50	1.50
10	SPARE C.B.	A	20	1	1									0.00
12	SPARE C.B.	B	20	1	1									0.00
14	SPARE C.B.	A	20	1	1									0.00
16	SPARE C.B.	B	20	1	1									0.00
18	SPARE C.B.	A	20	1	1									0.00
20	SPARE C.B.	B	20	1	1									0.00
22	SPARE C.B.	A	20	1	1									0.00
24	SPARE C.B.	B	20	1	1									0.00
26		A												0.00
28		B												0.00
30		A												0.00
32		B												0.00
34		A												0.00
36		B												0.00
38		A												0.00
40		B												0.00
42		A												0.00

Specifications

Rating (Amps):	200
Voltage (L–L):	240
Phase:	1
Wire:	3
Bus Material:	Cu
Int. Rating:	10,000A
Main Lugs Only:	–
Main Ckt Brkr:	200 A
Surface Mtd:	X
Flush Mtd:	–
Bonded Gnd:	X
Isolated Gnd:	–
200% Neutral:	–
Feed Thru:	–
Double Lug:	–
Top Feed:	–
Bottom Feed	–

Feed Thru Load:	NONE
Phase A:	0.00
Phase B:	0.00
Total Conn.:	0.00
Load From This Panel:	
Phase A:	8.65
Phase B:	8.65
Total Conn.:	17.30
Total Connected Load:	
Phase A:	8.65
Phase B:	8.65
Total Conn.:	17.30
Total Feeder Demand Load:	
Total:	17.30 kVA
Avg. Amps/Phase:	72 A.

CATEGORY	TOTAL CONN. LOAD (kVA)	DEMAND FACTOR	DEMAND LOAD (kVA)
Receptacles	0.00	50%>10kVA	0.00
Lighting	0.00	125%	0.00
Kitchen Equipment	0.00	NEC 220.56	0.00
Motors (Largest)	0.00	125%	0.00
Motors	0.00	100%	0.00
Heating	0.00	NEC 220.60	0.00
Cooling	0.00	NEC 220.60	0.00
Continuous Load	0.00	125%	0.00
Non-Continuous Load	17.30	100%	17.30
TOTAL	17.30		17.30

General Notes:

1. Typical Residential Load Center.

Keyed Notes:

1. Combination Arc Fault / GFCI circuit breaker.

COFFMAN ENGINEERS, INC.

PSE OP TRAINING CENTER — PANEL SCHEDULE — NEW PANEL: C

221158

Location: Residential Village — Feed Through: — Source: Utility

Ckt	Load Description	Phase	Amp	Poles	Notes	Rec.	Ltg.	Kit.	Mtr.	Htg.	Clg.	Cont.	Non.	Total
1	RMC1	A	400	3		0.00	0.00	0.00	0.00	0.00	0.00	0.00	34.60	34.60
3	–	B	–	–		0.00	0.00	0.00	0.00	0.00	0.00	0.00	33.60	33.60
5	–	C	–	–		0.00	0.00	0.00	0.00	0.00	0.00	0.00	19.00	19.00
7	CLC9	A	200	3		0.00	0.00	0.00	0.00	0.00	0.00	0.00	8.65	8.65
9	–	B	–	–		0.00	0.00	0.00	0.00	0.00	0.00	0.00	8.40	8.40
11	–	C	–	–		0.00	0.00	0.00	0.00	0.00	0.00	0.00	4.75	4.75
13	CLC10	A	200	3		0.00	0.00	0.00	0.00	0.00	0.00	0.00	8.65	8.65
15	–	B	–	–		0.00	0.00	0.00	0.00	0.00	0.00	0.00	8.40	8.40
17	–	C	–	–		0.00	0.00	0.00	0.00	0.00	0.00	0.00	4.75	4.75
19		A												0.00
21		B												0.00
23		C												0.00
25		A												0.00
27		B												0.00
29		C												0.00
31		A												0.00
33		B												0.00
35		C												0.00
37		A												0.00
39		B												0.00
41		C												0.00
2	RMC2	A	400	3		0.00	0.00	0.00	0.00	0.00	0.00	0.00	34.60	34.60
4	–	B	–	–		0.00	0.00	0.00	0.00	0.00	0.00	0.00	33.60	33.60
6	–	C	–	–		0.00	0.00	0.00	0.00	0.00	0.00	0.00	19.00	19.00
8	CLC11	A	200	3		0.00	0.00	0.00	0.00	0.00	0.00	0.00	8.65	8.65
10	–	B	–	–		0.00	0.00	0.00	0.00	0.00	0.00	0.00	8.40	8.40
12	–	C	–	–		0.00	0.00	0.00	0.00	0.00	0.00	0.00	4.75	4.75
14	SPARE C.B.	A	200	3										0.00
16	–	B	–	–										0.00
18	–	C	–	–										0.00
20		A												0.00
22		B												0.00
24		C												0.00
26		A												0.00
28		B												0.00
30		C												0.00
32		A												0.00
34		B												0.00
36		C												0.00
38		A												0.00
40		B												0.00
42		C												0.00

Specifications

Rating (Amps):	800
Voltage (L–L):	208
Phase:	3
Wire:	4
Bus Material:	Cu
Int. Rating:	22,000A
Main Lugs Only:	–
Main Ckt Brkr:	800 A
Surface Mtd:	X
Flush Mtd:	–
Bonded Gnd:	X
Isolated Gnd:	–
200% Neutral:	–
Feed Thru:	–
Double Lug:	–
Top Feed:	–
Bottom Feed	–

Feed Thru Load:	NONE
Phase A:	0.00
Phase B:	0.00
Phase C:	0.00
Total Conn.:	0.00
Load From This Panel:	
Phase A:	95.15
Phase B:	92.40
Phase C:	52.25
Total Conn.:	239.80
Total Connected Load:	
Phase A:	95.15
Phase B:	92.40
Phase C:	52.25
Total Conn.:	239.80
Total Feeder Demand Load:	
Total:	239.80 kVA
Avg. Amps/Phase:	666 A.

CATEGORY	TOTAL CONN. LOAD (kVA)	DEMAND FACTOR	DEMAND LOAD (kVA)
Receptacles	0.00	50%>10kVA	0.00
Lighting	0.00	125%	0.00
Kitchen Equipment	0.00	NEC 220.56	0.00
Motors (Largest)	0.00	125%	0.00
Motors	0.00	100%	0.00
Heating	0.00	NEC 220.60	0.00
Cooling	0.00	NEC 220.60	0.00
Continuous Load	0.00	125%	0.00
Non-Continuous Load	239.80	100%	239.80
TOTAL	239.80		239.80

General Notes:

1. NEMA 3R Service Entrance Rated.

Keyed Notes:

COFFMAN ENGINEERS, INC.

PSE OP TRAINING CENTER — PANEL SCHEDULE — NEW PANEL: RMC1

221158

Location: Residential Village — Feed Through: — Source: C

Ckt	Load Description	Phase	Amp	Poles	Notes	Rec.	Ltg.	Kit.	Mtr.	Htg.	Clg.	Cont.	Non.	Total
1	CLC1	A	200	3		0.00	0.00	0.00	0.00	0.00	0.00	0.00	8.65	8.65
3	–	B	–	–		0.00	0.00	0.00	0.00	0.00	0.00	0.00	8.40	8.40
5	–	C	–	–		0.00	0.00	0.00	0.00	0.00	0.00	0.00	4.75	4.75
7	CLC2	A	200	3		0.00	0.00	0.00	0.00	0.00	0.00	0.00	8.65	8.65
9	–	B	–	–		0.00	0.00	0.00	0.00	0.00	0.00	0.00	8.40	8.40
11	–	C	–	–		0.00	0.00	0.00	0.00	0.00	0.00	0.00	4.75	4.75
13	SPARE C.B.	A	200	3										0.00
15	–	B	–	–										0.00
17	–	C	–	–										0.00
19		A												0.00
21		B												0.00
23		C												0.00
25		A												0.00
27		B												0.00
29		C												0.00
31		A												0.00
33		B												0.00
35		C												0.00
37		A												0.00
39		B												0.00
41		C												0.00
2	CLC3	A	200	3		0.00	0.00	0.00	0.00	0.00	0.00	0.00	8.65	8.65
4	–	B	–	–		0.00	0.00	0.00	0.00	0.00	0.00	0.00	8.40	8.40
6	–	C	–	–		0.00	0.00	0.00	0.00	0.00	0.00	0.00	4.75	4.75
8	CLC4	A	200	3		0.00	0.00	0.00	0.00	0.00	0.00	0.00	8.65	8.65
10	–	B	–	–		0.00	0.00	0.00	0.00	0.00	0.00	0.00	8.40	8.40
12	–	C	–	–		0.00	0.00	0.00	0.00	0.00	0.00	0.00	4.75	4.75
14	SPARE C.B.	A	200	3										0.00
16	–	B	–	–										0.00
18	–	C	–	–										0.00
20		A												0.00
22		B												0.00
24		C												0.00
26		A												0.00
28		B												0.00
30		C												0.00
32		A												0.00
34		B												0.00
36		C												0.00
38		A												0.00
40		B												0.00
42		C												0.00

Specifications

Rating (Amps):	400
Voltage (L–L):	208
Phase:	3
Wire:	4
Bus Material:	Cu
Int. Rating:	22,000A
Main Lugs Only:	–
Main Ckt Brkr:	400 A
Surface Mtd:	X
Flush Mtd:	–
Bonded Gnd:	X
Isolated Gnd:	–
200% Neutral:	–
Feed Thru:	–
Double Lug:	–
Top Feed:	–
Bottom Feed	–

Feed Thru Load:	NONE
Phase A:	0.00
Phase B:	0.00
Phase C:	0.00
Total Conn.:	0.00
Load From This Panel:	
Phase A:	34.60
Phase B:	33.60
Phase C:	19.00
Total Conn.:	87.20
Total Connected Load:	
Phase A:	34.60
Phase B:	33.60
Phase C:	19.00
Total Conn.:	87.20
Total Feeder Demand Load:	
Total:	87.20 kVA
Avg. Amps/Phase:	242 A.

CATEGORY	TOTAL CONN. LOAD (kVA)	DEMAND FACTOR	DEMAND LOAD (kVA)
Receptacles	0.00	50%>10kVA	0.00
Lighting	0.00	125%	0.00
Kitchen Equipment	0.00	NEC 220.56	0.00
Motors (Largest)	0.00	125%	0.00
Motors	0.00	100%	0.00
Heating	0.00	NEC 220.60	0.00
Cooling	0.00	NEC 220.60	0.00
Continuous Load	0.00	125%	0.00
Non-Continuous Load	87.20	100%	87.20
TOTAL	87.20		87.20

General Notes:

1. NEMA 3R Service Entrance Rated.

Keyed

PRCNC20240216

ZERVAS
ARCHITECTURE | INTERIOR DESIGN
zervasgroup.com
209 Prospect Street
Bellingham, WA 98225
360.734.4744

COFFMAN ENGINEERS
1101 2nd Avenue,
Suite 400
Seattle, WA 98101
ph 206.623.0717
www.coffman.com

CHRISTOPHER J. BAKER — STATE OF WASHINGTON — 31344 — REGISTERED PROFESSIONAL ENGINEER
1/25/2024

City of Puyallup
Development & Permitting Services
ISSUED PERMIT
Building | Planning | Engineering | Public Works | Fire | Traffic

PSE OP TRAINING CENTER — PANEL SCHEDULE — NEW PANEL: RMC2

221158

Location: Residential Village — Feed Through: — Source: C

Ckt	Load Description	Phase	Amp	Poles	Notes	Rec.	Ltg.	Kit.	Mtr.	Htg.	Clg.	Cont.	Non.	Total
1	CLC5	A	200	3		0.00	0.00	0.00	0.00	0.00	0.00	0.00	8.65	8.65
3	–	B	–	–		0.00	0.00	0.00	0.00	0.00	0.00	0.00	8.40	8.40
5	–	C	–	–		0.00	0.00	0.00	0.00	0.00	0.00	0.00	4.75	4.75
7	CLC6	A	200	3		0.00	0.00	0.00	0.00	0.00	0.00	0.00	8.65	8.65
9	–	B	–	–		0.00	0.00	0.00	0.00	0.00	0.00	0.00	8.40	8.40
11	–	C	–	–		0.00	0.00	0.00	0.00	0.00	0.00	0.00	4.75	4.75
13	SPARE C.B.	A	200	3										0.00
15	–	B	–	–										0.00
17	–	C	–	–										0.00
19		A												0.00
21		B												0.00
23		C												0.00
25		A												0.00
27		B												0.00
29		C												0.00
31		A												0.00
33		B												0.00
35		C												0.00
37		A												0.00
39		B												0.00
41		C												0.00
2	CLC7	A	200	3		0.00	0.00	0.00	0.00	0.00	0.00	0.00	8.65	8.65
4	–	B	–	–		0.00	0.00	0.00	0.00	0.00	0.00	0.00	8.40	8.40
6	–	C	–	–		0.00	0.00	0.00	0.00	0.00	0.00	0.00	4.75	4.75
8	CLC8	A	200	3		0.00	0.00	0.00	0.00	0.00	0.00	0.00	8.65	8.65
10	–	B	–	–		0.00	0.00	0.00	0.00	0.00	0.00	0.00	8.40	8.40
12	–	C	–	–		0.00	0.00	0.00	0.00	0.00	0.00	0.00	4.75	4.75
14	SPARE C.B.	A	200	3										0.00
16	–	B	–	–										0.00
18	–	C	–	–										0.00
20		A												0.00
22		B												0.00
24		C												0.00
26		A												0.00
28		B												0.00
30		C												0.00
32		A												0.00
34		B												0.00
36		C												0.00
38		A												0.00
40		B												0.00
42		C												0.00

Specifications

Rating (Amps):	400
Voltage (L-L):	208
Phase:	3
Wire:	4
Bus Material:	Cu
Int. Rating:	22,000A
Main Lugs Only:	–
Main Ckt Brkr:	400 A
Surface Mtd:	X
Flush Mtd:	–
Bonded Gnd:	X
Isolated Gnd:	–
200% Neutral:	–
Feed Thru:	–
Double Lug:	–
Top Feed:	–
Bottom Feed	–

Feed Thru Load:	NONE
Phase A:	0.00
Phase B:	0.00
Phase C:	0.00
Total Conn.:	0.00
Load From This Panel:	
Phase A:	34.60
Phase B:	33.60
Phase C:	19.00
Total Conn.:	87.20
Total Connected Load:	
Phase A:	34.60
Phase B:	33.60
Phase C:	19.00
Total Conn.:	87.20
Total Feeder Demand Load:	
Total:	87.20 kVA
Avg. Amps/Phase:	242 A.

CATEGORY	TOTAL CONN. LOAD (kVA)	DEMAND FACTOR	DEMAND LOAD (kVA)
Receptacles	0.00	50%>10kVA	0.00
Lighting	0.00	125%	0.00
Kitchen Equipment	0.00	NEC 220.56	0.00
Motors (Largest)	0.00	125%	0.00
Motors	0.00	100%	0.00
Heating	0.00	NEC 220.60	0.00
Cooling	0.00	NEC 220.60	0.00
Continuous Load	0.00	125%	0.00
Non-Continuous Load	87.20	100%	87.20
TOTAL	87.20		87.20

General Notes:
1. NEMA 3R Service Entrance Rated.

Keyed Notes:

COFFMAN ENGINEERS, INC.

PSE OP TRAINING CENTER — PANEL SCHEDULE — NEW PANEL: CLC1

221158

Location: Residential Village — Feed Through: — Source: RMC1

Ckt	Load Description	Phase	Amp	Poles	Notes	Rec.	Ltg.	Kit.	Mtr.	Htg.	Clg.	Cont.	Non.	Total
1	RANGE	A	50	2	1								6.00	6.00
3	–	B	–	–									6.00	6.00
5	HEAT PUMP	C	20	2	1								1.00	1.00
7	–	A	–	–									1.00	1.00
9	ELECTRIC WATER HEATER	B	30	2	1								2.25	2.25
11	–	C	–	–									2.25	2.25
13	SPARE C.B.	A	20	1	1									0.00
15	SPARE C.B.	B	20	1	1									0.00
17	SPARE C.B.	C	20	1	1									0.00
19	SPARE C.B.	A	20	1	1									0.00
21	SPARE C.B.	B	20	1	1									0.00
23	SPARE C.B.	C	20	1	1									0.00
25		A												0.00
27		B												0.00
29		C												0.00
31		A												0.00
33		B												0.00
35		C												0.00
37		A												0.00
39		B												0.00
41		C												0.00
2	LIGHTING	A	20	1	1								0.15	0.15
4	RECEPTACLES	B	20	1	1								0.15	0.15
6	APPLIANCE	C	20	1	1								1.50	1.50
8	APPLIANCE	A	20	1	1								1.50	1.50
10	SPARE C.B.	B	20	1	1									0.00
12	SPARE C.B.	C	20	1	1									0.00
14	SPARE C.B.	A	20	1	1									0.00
16	SPARE C.B.	B	20	1	1									0.00
18	SPARE C.B.	C	20	1	1									0.00
20	SPARE C.B.	A	20	1	1									0.00
22	SPARE C.B.	B	20	1	1									0.00
24	SPARE C.B.	C	20	1	1									0.00
26		A												0.00
28		B												0.00
30		C												0.00
32		A												0.00
34		B												0.00
36		C												0.00
38		A												0.00
40		B												0.00
42		C												0.00

Specifications

Rating (Amps):	200
Voltage (L-L):	208
Phase:	3
Wire:	4
Bus Material:	Cu
Int. Rating:	10,000A
Main Lugs Only:	–
Main Ckt Brkr:	200 A
Surface Mtd:	X
Flush Mtd:	–
Bonded Gnd:	X
Isolated Gnd:	–
200% Neutral:	–
Feed Thru:	–
Double Lug:	–
Top Feed:	–
Bottom Feed	–

Feed Thru Load:	NONE
Phase A:	0.00
Phase B:	0.00
Phase C:	0.00
Total Conn.:	0.00
Load From This Panel:	
Phase A:	8.65
Phase B:	8.40
Phase C:	4.75
Total Conn.:	21.80
Total Connected Load:	
Phase A:	8.65
Phase B:	8.40
Phase C:	4.75
Total Conn.:	21.80
Total Feeder Demand Load:	
Total:	21.80 kVA
Avg. Amps/Phase:	61 A.

CATEGORY	TOTAL CONN. LOAD (kVA)	DEMAND FACTOR	DEMAND LOAD (kVA)
Receptacles	0.00	50%>10kVA	0.00
Lighting	0.00	125%	0.00
Kitchen Equipment	0.00	NEC 220.56	0.00
Motors (Largest)	0.00	125%	0.00
Motors	0.00	100%	0.00
Heating	0.00	NEC 220.60	0.00
Cooling	0.00	NEC 220.60	0.00
Continuous Load	0.00	125%	0.00
Non-Continuous Load	21.80	100%	21.80
TOTAL	21.80		21.80

General Notes:
1. Typical Commercial Load Center.

Keyed Notes:
1. Combination Arc Fault / GFCI circuit breaker.

COFFMAN ENGINEERS, INC.

PSE OP TRAINING CENTER — PANEL SCHEDULE — NEW PANEL: CLC2

221158

Location: Residential Village — Feed Through: — Source: RMC1

Ckt	Load Description	Phase	Amp	Poles	Notes	Rec.	Ltg.	Kit.	Mtr.	Htg.	Clg.	Cont.	Non.	Total
1	RANGE	A	50	2	1								6.00	6.00
3	–	B	–	–									6.00	6.00
5	HEAT PUMP	C	20	2	1								1.00	1.00
7	–	A	–	–									1.00	1.00
9	ELECTRIC WATER HEATER	B	30	2	1								2.25	2.25
11	–	C	–	–									2.25	2.25
13	SPARE C.B.	A	20	1	1									0.00
15	SPARE C.B.	B	20	1	1									0.00
17	SPARE C.B.	C	20	1	1									0.00
19	SPARE C.B.	A	20	1	1									0.00
21	SPARE C.B.	B	20	1	1									0.00
23	SPARE C.B.	C	20	1	1									0.00
25		A												0.00
27		B												0.00
29		C												0.00
31		A												0.00
33		B												0.00
35		C												0.00
37		A												0.00
39		B												0.00
41		C												0.00
2	LIGHTING	A	20	1	1								0.15	0.15
4	RECEPTACLES	B	20	1	1								0.15	0.15
6	APPLIANCE	C	20	1	1								1.50	1.50
8	APPLIANCE	A	20	1	1								1.50	1.50
10	SPARE C.B.	B	20	1	1									0.00
12	SPARE C.B.	C	20	1	1									0.00
14	SPARE C.B.	A	20	1	1									0.00
16	SPARE C.B.	B	20	1	1									0.00
18	SPARE C.B.	C	20	1	1									0.00
20	SPARE C.B.	A	20	1	1									0.00
22	SPARE C.B.	B	20	1	1									0.00
24	SPARE C.B.	C	20	1	1									0.00
26		A												0.00
28		B												0.00
30		C												0.00
32		A												0.00
34		B												0.00
36		C												0.00
38		A												0.00
40		B												0.00
42		C												0.00

Specifications

Rating (Amps):	200
Voltage (L-L):	208
Phase:	3
Wire:	4
Bus Material:	Cu
Int. Rating:	10,000A
Main Lugs Only:	–
Main Ckt Brkr:	200 A
Surface Mtd:	X
Flush Mtd:	–
Bonded Gnd:	X
Isolated Gnd:	–
200% Neutral:	–
Feed Thru:	–
Double Lug:	–
Top Feed:	–
Bottom Feed	–

Feed Thru Load:	NONE
Phase A:	0.00
Phase B:	0.00
Phase C:	0.00
Total Conn.:	0.00
Load From This Panel:	
Phase A:	8.65
Phase B:	8.40
Phase C:	4.75
Total Conn.:	21.80
Total Connected Load:	
Phase A:	8.65
Phase B:	8.40
Phase C:	4.75
Total Conn.:	21.80
Total Feeder Demand Load:	
Total:	21.80 kVA
Avg. Amps/Phase:	61 A.

CATEGORY	TOTAL CONN. LOAD (kVA)	DEMAND FACTOR	DEMAND LOAD (kVA)
Receptacles	0.00	50%>10kVA	0.00
Lighting	0.00	125%	0.00
Kitchen Equipment	0.00	NEC 220.56	0.00
Motors (Largest)	0.00	125%	0.00
Motors	0.00	100%	0.00
Heating	0.00	NEC 220.60	0.00
Cooling	0.00	NEC 220.60	0.00
Continuous Load	0.00	125%	0.00
Non-Continuous Load	21.80	100%	21.80
TOTAL	21.80		21.80

General Notes:
1. Typical Commercial Load Center.

Keyed Notes:
1. Combination Arc Fault / GFCI circuit breaker.

COFFMAN ENGINEERS, INC.

PSE OP TRAINING CENTER — PANEL SCHEDULE — NEW PANEL: CLC3

221158

Location: Residential Village — Feed Through: — Source: RMC1

Ckt	Load Description	Phase	Amp	Poles	Notes	Rec.	Ltg.	Kit.	Mtr.	Htg.	Clg.	Cont.	Non.	Total
1	RANGE	A	50	2	1								6.00	6.00
3	–	B	–	–									6.00	6.00
5	HEAT PUMP	C	20	2	1								1.00	1.00
7	–	A	–	–									1.00	1.00
9	ELECTRIC WATER HEATER	B	30	2	1								2.25	2.25
11	–	C	–	–									2.25	2.25
13	SPARE C.B.	A	20	1	1									0.00
15	SPARE C.B.	B	20	1	1									0.00
17	SPARE C.B.	C	20	1	1									0.00
19	SPARE C.B.	A	20	1	1									0.00
21	SPARE C.B.	B	20	1	1									0.00
23	SPARE C.B.	C	20	1	1									0.00
25		A												0.00
27		B												0.00
29		C												0.00
31		A												0.00
33		B												0.00
35		C												0.00
37		A												0.00
39		B												0.00
41		C												0.00
2	LIGHTING	A	20	1	1								0.15	0.15
4	RECEPTACLES	B	20	1	1								0.15	0.15
6	APPLIANCE	C	20	1	1								1.50	1.50
8	APPLIANCE	A	20	1	1								1.50	1.50
10	SPARE C.B.	B	20	1	1									0.00
12	SPARE C.B.	C	20	1	1									0.00
14	SPARE C.B.	A	20	1	1									0.00
16	SPARE C.B.	B	20	1	1									0.00
18	SPARE C.B.	C	20	1	1									0.00
20	SPARE C.B.	A	20	1	1									0.00
22	SPARE C.B.	B	20	1	1									0.00
24	SPARE C.B.	C	20	1	1									0.00
26		A												0.00
28		B												0.00
30		C												0.00
32		A												0.00
34		B												0.00
36		C												0.00
38		A												0.00
40		B												0.00
42		C												0.00

Specifications

Rating (Amps):	200
Voltage (L-L):	208
Phase:	3
Wire:	4
Bus Material:	Cu
Int. Rating:	10,000A
Main Lugs Only:	–
Main Ckt Brkr:	200 A
Surface Mtd:	X
Flush Mtd:	–
Bonded Gnd:	X
Isolated Gnd:	–
200% Neutral:	–
Feed Thru:	–
Double Lug:	–
Top Feed:	–
Bottom Feed	–

Feed Thru Load:	NONE
Phase A:	0.00
Phase B:	0.00
Phase C:	0.00
Total Conn.:	0.00
Load From This Panel:	
Phase A:	8.65
Phase B:	8.40
Phase C:	4.75
Total Conn.:	21.80
Total Connected Load:	
Phase A:	8.65
Phase B:	8.40
Phase C:	4.75
Total Conn.:	21.80
Total Feeder Demand Load:	
Total:	21.80 kVA
Avg. Amps/Phase:	61 A.

CATEGORY	TOTAL CONN. LOAD (kVA)	DEMAND FACTOR	DEMAND LOAD (kVA)
Receptacles	0.00	50%>10kVA	0.00
Lighting	0.00	125%	0.00
Kitchen Equipment	0.00	NEC 220.56	0.00
Motors (Largest)	0.00	125%	0.00
Motors	0.00	100%	0.00
Heating	0.00	NEC 220.60	0.00
Cooling	0.00	NEC 220.60	0.00
Continuous Load	0.00	125%	0.00
Non-Continuous Load	21.80	100%	21.80
TOTAL	21.80		21.80

General Notes:
1. Typical Commercial Load Center.

Keyed Notes:
1. Combination Arc Fault / GFCI circuit breaker.

COFFMAN ENGINEERS, INC.

PSE OP TRAINING CENTER — PANEL SCHEDULE — NEW PANEL: CLC4

221158

Location: Residential Village — Feed Through: — Source: RMC1

Ckt	Load Description	Phase	Amp	Poles	Notes	Rec.	Ltg.	Kit.	Mtr.	Htg.	Clg.	Cont.	Non.	Total
1	RANGE	A	50	2	1								6.00	6.00
3	–	B	–	–									6.00	6.00
5	HEAT PUMP	C	20	2	1								1.00	1.00
7	–	A	–	–									1.00	1.00
9	ELECTRIC WATER HEATER	B	30	2	1								2.25	2.25
11	–	C	–	–									2.25	2.25
13	SPARE C.B.	A	20	1	1									0.00
15	SPARE C.B.	B	20	1	1									0.00
17	SPARE C.B.	C	20	1	1									0.00
19	SPARE C.B.	A	20	1	1									0.00
21	SPARE C.B.	B	20	1	1									0.00
23	SPARE C.B.	C	20	1	1									0.00
25		A												0.00
27		B												0.00
29		C												0.00
31		A												0.00
33		B												0.00
35		C												0.00
37		A												0.00
39		B												0.00
41		C												0.00
2	LIGHTING	A	20	1	1								0.15	0.15
4	RECEPTACLES	B	20	1	1								0.15	0.15
6	APPLIANCE	C	20	1	1								1.50	1.50
8	APPLIANCE	A	20	1	1								1.50	1.50
10	SPARE C.B.	B	20	1	1									0.00
12	SPARE C.B.	C	20	1	1									0.00
14	SPARE C.B.	A	20	1	1									0.00
16	SPARE C.B.	B	20	1	1									0.00
18	SPARE C.B.	C	20	1	1									0.00
20	SPARE C.B.	A	20	1	1									0.00
22	SPARE C.B.	B	20	1	1									0.00
24	SPARE C.B.	C	20	1	1									0.00
26		A												0.00
28		B												0.00
30		C												0.00
32		A												0.00
34		B												0.00
36		C												0.00
38		A												0.00
40		B												0.00
42		C												0.00

Specifications

Rating (Amps):	200
Voltage (L-L):	208
Phase:	3
Wire:	4
Bus Material:	Cu
Int. Rating:	10,000A
Main Lugs Only:	–
Main Ckt Brkr:	200 A
Surface Mtd:	X
Flush Mtd:	–
Bonded Gnd:	X
Isolated Gnd:	–
200% Neutral:	–
Feed Thru:	–
Double Lug:	–
Top Feed:	–
Bottom Feed	–

Feed Thru Load:	NONE
Phase A:	0.00
Phase B:	0.00
Phase C:	0.00
Total Conn.:	0.00
Load From This Panel:	
Phase A:	8.65
Phase B:	8.40
Phase C:	4.75
Total Conn.:	21.80
Total Connected Load:	
Phase A:	8.65
Phase B:	8.40
Phase C:	4.75
Total Conn.:	21.80
Total Feeder Demand Load:	
Total:	21.80 kVA
Avg. Amps/Phase:	61 A.

CATEGORY	TOTAL CONN. LOAD (kVA)	DEMAND FACTOR	DEMAND LOAD (kVA)
Receptacles	0.00	50%>10kVA	0.00
Lighting	0.00	125%	0.00
Kitchen Equipment	0.00	NEC 220.56	0.00
Motors (Largest)	0.00	125%	0.00
Motors	0.00	100%	0.00
Heating	0.00	NEC 220.60	0.00
Cooling	0.00	NEC 220.60	0.00
Continuous Load	0.00	125%	0.00
Non-Continuous Load	21.80	100%	21.80
TOTAL	21.80		21.80

General Notes:
1. Typical Commercial Load Center.

Keyed Notes:
1. Combination Arc Fault / GFCI circuit breaker.

COFFMAN ENGINEERS, INC.

PSE OP TRAINING CENTER — PANEL SCHEDULE — NEW PANEL: CLC5

221158

Location: Residential Village — Feed Through: — Source: RMC2

Ckt	Load Description	Phase	Amp	Poles	Notes	Rec.	Ltg.	Kit.	Mtr.	Htg.	Clg.	Cont.	Non.	Total
1	RANGE	A	50	2	1								6.00	6.00
3	–	B	–	–									6.00	6.00
5	HEAT PUMP	C	20	2	1								1.00	1.00
7	–	A	–	–									1.00	1.00
9	ELECTRIC WATER HEATER	B	30	2	1								2.25	2.25
11	–	C	–	–									2.25	2.25
13	SPARE C.B.	A	20	1	1									0.00
15	SPARE C.B.	B	20	1	1									0.00
17	SPARE C.B.	C	20	1	1									0.00
19	SPARE C.B.	A	20	1	1									0.00
21	SPARE C.B.	B	20	1	1									0.00
23	SPARE C.B.	C	20	1	1									0.00
25		A												0.00
27		B												0.00
29		C												0.00
31		A												0.00
33		B												0.00
35		C												0.00
37		A												0.00
39		B												0.00
41		C												0.00
2	LIGHTING	A	20	1	1								0.15	0.15
4	RECEPTACLES	B	20	1	1								0.15	0.15
6	APPLIANCE	C	20	1	1								1.50	1.50
8	APPLIANCE	A	20	1	1								1.50	1.50
10	SPARE C.B.	B	20	1	1									0.00
12	SPARE C.B.	C	20	1	1									0.00
14	SPARE C.B.	A	20	1	1									0.00
16	SPARE C.B.	B	20	1	1									0.00
18	SPARE C.B.	C	20	1	1									0.00
20	SPARE C.B.	A	20	1	1									0.00
22	SPARE C.B.	B	20	1	1									0.00
24	SPARE C.B.	C	20	1	1									0.00
26		A												0.00
28		B												0.00
30		C												0.00
32		A												0.00
34		B												0.00
36		C												0.00
38		A												0.00
40		B												0.00
42		C												0.00

Specifications

Rating (Amps):	200
Voltage (L-L):	208
Phase:	3
Wire:	4
Bus Material:	Cu
Int. Rating:	10,000A
Main Lugs Only:	–
Main Ckt Brkr:	200 A
Surface Mtd:	X
Flush Mtd:	–
Bonded Gnd:	X
Isolated Gnd:	–
200% Neutral:	–
Feed Thru:	–
Double Lug:	–
Top Feed:	–
Bottom Feed	–

Feed Thru Load:	NONE
Phase A:	0.00
Phase B:	0.00
Phase C:	0.00
Total Conn.:	0.00
Load From This Panel:	
Phase A:	8.65
Phase B:	8.40
Phase C:	4.75
Total Conn.:	21.80
Total Connected Load:	
Phase A:	8.65
Phase B:	8.40
Phase C:	4.75
Total Conn.:	21.80
Total Feeder Demand Load:	
Total:	21.80 kVA
Avg. Amps/Phase:	61 A.

CATEGORY	TOTAL CONN. LOAD (kVA)	DEMAND FACTOR	DEMAND LOAD (kVA)
Receptacles	0.00	50%>10kVA	0.00
Lighting	0.00	125%	0.00
Kitchen Equipment	0.00	NEC 220.56	0.00
Motors (Largest)	0.00	125%	0.00
Motors	0.00	100%	0.00
Heating	0.00	NEC 220.60	0.00
Cooling	0.00	NEC 220.60	0.00
Continuous Load	0.00	125%	0.00
Non-Continuous Load	21.80	100%	21.80
TOTAL	21.80		21.80

General Notes:
1. Typical Commercial Load Center.

Keyed Notes:
1. Combination Arc Fault / GFCI circuit breaker.

COFFMAN ENGINEERS, IN

PRCNC20240216

ZERVAS
ARCHITECTURE | INTERIOR DESIGN
zervasgroup.com
209 Prospect Street
Bellingham, WA 98225
360.734.4744

COFFMAN ENGINEERS
1101 2nd Avenue,
Suite 400
Seattle, WA 98101
ph 206.623.0717
www.coffman.com

CHRISTOPHER J. BAKER — STATE OF WASHINGTON — 31344 — REGISTERED PROFESSIONAL ENGINEER
1/25/2024

City of Puyallup
Development & Permitting Services
ISSUED PERMIT
Building | Planning | Engineering | Public Works | Fire | Traffic

PSE OP TRAINING CENTER — PANEL SCHEDULE — NEW PANEL: CLC6

221158

Location: Residential Village — Feed Through: — Source: RMC2

Ckt	Load Description	Phase	Amp	Poles	Notes	Rec.	Ltg.	Kit.	Mtr.	Htg.	Clg.	Cont.	Non.	Total
1	RANGE	A	50	2	1								6.00	6.00
3	–	B	–	–									6.00	6.00
5	HEAT PUMP	C	20	2	1								1.00	1.00
7	–	A	–	–									1.00	1.00
9	ELECTRIC WATER HEATER	B	30	2	1								2.25	2.25
11	–	C	–	–									2.25	2.25
13	SPARE C.B.	A	20	1	1									0.00
15	SPARE C.B.	B	20	1	1									0.00
17	SPARE C.B.	C	20	1	1									0.00
19	SPARE C.B.	A	20	1	1									0.00
21	SPARE C.B.	B	20	1	1									0.00
23	SPARE C.B.	C	20	1	1									0.00
25		A												0.00
27		B												0.00
29		C												0.00
31		A												0.00
33		B												0.00
35		C												0.00
37		A												0.00
39		B												0.00
41		C												0.00
2	LIGHTING	A	20	1	1								0.15	0.15
4	RECEPTACLES	B	20	1	1								0.15	0.15
6	APPLIANCE	C	20	1	1								1.50	1.50
8	APPLIANCE	A	20	1	1								1.50	1.50
10	SPARE C.B.	B	20	1	1									0.00
12	SPARE C.B.	C	20	1	1									0.00
14	SPARE C.B.	A	20	1	1									0.00
16	SPARE C.B.	B	20	1	1									0.00
18	SPARE C.B.	C	20	1	1									0.00
20	SPARE C.B.	A	20	1	1									0.00
22	SPARE C.B.	B	20	1	1									0.00
24	SPARE C.B.	C	20	1	1									0.00
26		A												0.00
28		B												0.00
30		C												0.00
32		A												0.00
34		B												0.00
36		C												0.00
38		A												0.00
40		B												0.00
42		C												0.00

Specifications

Rating (Amps):	200
Voltage (L-L):	208
Phase:	3
Wire:	4
Bus Material:	Cu
Int. Rating:	10,000A
Main Lugs Only:	–
Main Ckt Brkr:	200 A
Surface Mtd:	X
Flush Mtd:	–
Bonded Gnd:	X
Isolated Gnd:	–
200% Neutral:	–
Feed Thru:	–
Double Lug:	–
Top Feed:	–
Bottom Feed	–

Feed Thru Load:	NONE
Phase A:	0.00
Phase B:	0.00
Phase C:	0.00
Total Conn.:	0.00
Load From This Panel:	
Phase A:	8.65
Phase B:	8.40
Phase C:	4.75
Total Conn.:	21.80
Total Connected Load:	
Phase A:	8.65
Phase B:	8.40
Phase C:	4.75
Total Conn.:	21.80
Total Feeder Demand Load:	
Total:	21.80 kVA
Avg. Amps/Phase:	61 A.

CATEGORY	TOTAL CONN. LOAD (kVA)	DEMAND FACTOR	DEMAND LOAD (kVA)
Receptacles	0.00	50%>10kVA	0.00
Lighting	0.00	125%	0.00
Kitchen Equipment	0.00	NEC 220.56	0.00
Motors (Largest)	0.00	125%	0.00
Motors	0.00	100%	0.00
Heating	0.00	NEC 220.60	0.00
Cooling	0.00	NEC 220.60	0.00
Continuous Load	0.00	125%	0.00
Non-Continuous Load	21.80	100%	21.80
TOTAL	21.80		21.80

General Notes:
1. Typical Commercial Load Center.

Keyed Notes:
1. Combination Arc Fault / GFCI circuit breaker.

COFFMAN ENGINEERS, INC.

PSE OP TRAINING CENTER — PANEL SCHEDULE — NEW PANEL: CLC7

221158

Location: Residential Village — Feed Through: — Source: RMC2

Ckt	Load Description	Phase	Amp	Poles	Notes	Rec.	Ltg.	Kit.	Mtr.	Htg.	Clg.	Cont.	Non.	Total
1	RANGE	A	50	2	1								6.00	6.00
3	–	B	–	–									6.00	6.00
5	HEAT PUMP	C	20	2	1								1.00	1.00
7	–	A	–	–									1.00	1.00
9	ELECTRIC WATER HEATER	B	30	2	1								2.25	2.25
11	–	C	–	–									2.25	2.25
13	SPARE C.B.	A	20	1	1									0.00
15	SPARE C.B.	B	20	1	1									0.00
17	SPARE C.B.	C	20	1	1									0.00
19	SPARE C.B.	A	20	1	1									0.00
21	SPARE C.B.	B	20	1	1									0.00
23	SPARE C.B.	C	20	1	1									0.00
25		A												0.00
27		B												0.00
29		C												0.00
31		A												0.00
33		B												0.00
35		C												0.00
37		A												0.00
39		B												0.00
41		C												0.00
2	LIGHTING	A	20	1	1								0.15	0.15
4	RECEPTACLES	B	20	1	1								0.15	0.15
6	APPLIANCE	C	20	1	1								1.50	1.50
8	APPLIANCE	A	20	1	1								1.50	1.50
10	SPARE C.B.	B	20	1	1									0.00
12	SPARE C.B.	C	20	1	1									0.00
14	SPARE C.B.	A	20	1	1									0.00
16	SPARE C.B.	B	20	1	1									0.00
18	SPARE C.B.	C	20	1	1									0.00
20	SPARE C.B.	A	20	1	1									0.00
22	SPARE C.B.	B	20	1	1									0.00
24	SPARE C.B.	C	20	1	1									0.00
26		A												0.00
28		B												0.00
30		C												0.00
32		A												0.00
34		B												0.00
36		C												0.00
38		A												0.00
40		B												0.00
42		C												0.00

Specifications

Rating (Amps):	200
Voltage (L-L):	208
Phase:	3
Wire:	4
Bus Material:	Cu
Int. Rating:	10,000A
Main Lugs Only:	–
Main Ckt Brkr:	200 A
Surface Mtd:	X
Flush Mtd:	–
Bonded Gnd:	X
Isolated Gnd:	–
200% Neutral:	–
Feed Thru:	–
Double Lug:	–
Top Feed:	–
Bottom Feed	–

Feed Thru Load:	NONE
Phase A:	0.00
Phase B:	0.00
Phase C:	0.00
Total Conn.:	0.00
Load From This Panel:	
Phase A:	8.65
Phase B:	8.40
Phase C:	4.75
Total Conn.:	21.80
Total Connected Load:	
Phase A:	8.65
Phase B:	8.40
Phase C:	4.75
Total Conn.:	21.80
Total Feeder Demand Load:	
Total:	21.80 kVA
Avg. Amps/Phase:	61 A.

CATEGORY	TOTAL CONN. LOAD (kVA)	DEMAND FACTOR	DEMAND LOAD (kVA)
Receptacles	0.00	50%>10kVA	0.00
Lighting	0.00	125%	0.00
Kitchen Equipment	0.00	NEC 220.56	0.00
Motors (Largest)	0.00	125%	0.00
Motors	0.00	100%	0.00
Heating	0.00	NEC 220.60	0.00
Cooling	0.00	NEC 220.60	0.00
Continuous Load	0.00	125%	0.00
Non-Continuous Load	21.80	100%	21.80
TOTAL	21.80		21.80

General Notes:
1. Typical Commercial Load Center.

Keyed Notes:
1. Combination Arc Fault / GFCI circuit breaker.

COFFMAN ENGINEERS, INC.

PSE OP TRAINING CENTER — PANEL SCHEDULE — NEW PANEL: CLC8

221158

Location: Residential Village — Feed Through: — Source: RMC2

Ckt	Load Description	Phase	Amp	Poles	Notes	Rec.	Ltg.	Kit.	Mtr.	Htg.	Clg.	Cont.	Non.	Total
1	RANGE	A	50	2	1								6.00	6.00
3	–	B	–	–									6.00	6.00
5	HEAT PUMP	C	20	2	1								1.00	1.00
7	–	A	–	–									1.00	1.00
9	ELECTRIC WATER HEATER	B	30	2	1								2.25	2.25
11	–	C	–	–									2.25	2.25
13	SPARE C.B.	A	20	1	1									0.00
15	SPARE C.B.	B	20	1	1									0.00
17	SPARE C.B.	C	20	1	1									0.00
19	SPARE C.B.	A	20	1	1									0.00
21	SPARE C.B.	B	20	1	1									0.00
23	SPARE C.B.	C	20	1	1									0.00
25		A												0.00
27		B												0.00
29		C												0.00
31		A												0.00
33		B												0.00
35		C												0.00
37		A												0.00
39		B												0.00
41		C												0.00
2	LIGHTING	A	20	1	1								0.15	0.15
4	RECEPTACLES	B	20	1	1								0.15	0.15
6	APPLIANCE	C	20	1	1								1.50	1.50
8	APPLIANCE	A	20	1	1								1.50	1.50
10	SPARE C.B.	B	20	1	1									0.00
12	SPARE C.B.	C	20	1	1									0.00
14	SPARE C.B.	A	20	1	1									0.00
16	SPARE C.B.	B	20	1	1									0.00
18	SPARE C.B.	C	20	1	1									0.00
20	SPARE C.B.	A	20	1	1									0.00
22	SPARE C.B.	B	20	1	1									0.00
24	SPARE C.B.	C	20	1	1									0.00
26		A												0.00
28		B												0.00
30		C												0.00
32		A												0.00
34		B												0.00
36		C												0.00
38		A												0.00
40		B												0.00
42		C												0.00

Specifications

Rating (Amps):	200
Voltage (L-L):	208
Phase:	3
Wire:	4
Bus Material:	Cu
Int. Rating:	10,000A
Main Lugs Only:	–
Main Ckt Brkr:	200 A
Surface Mtd:	X
Flush Mtd:	–
Bonded Gnd:	X
Isolated Gnd:	–
200% Neutral:	–
Feed Thru:	–
Double Lug:	–
Top Feed:	–
Bottom Feed	–

Feed Thru Load:	NONE
Phase A:	0.00
Phase B:	0.00
Phase C:	0.00
Total Conn.:	0.00
Load From This Panel:	
Phase A:	8.65
Phase B:	8.40
Phase C:	4.75
Total Conn.:	21.80
Total Connected Load:	
Phase A:	8.65
Phase B:	8.40
Phase C:	4.75
Total Conn.:	21.80
Total Feeder Demand Load:	
Total:	21.80 kVA
Avg. Amps/Phase:	61 A.

CATEGORY	TOTAL CONN. LOAD (kVA)	DEMAND FACTOR	DEMAND LOAD (kVA)
Receptacles	0.00	50%>10kVA	0.00
Lighting	0.00	125%	0.00
Kitchen Equipment	0.00	NEC 220.56	0.00
Motors (Largest)	0.00	125%	0.00
Motors	0.00	100%	0.00
Heating	0.00	NEC 220.60	0.00
Cooling	0.00	NEC 220.60	0.00
Continuous Load	0.00	125%	0.00
Non-Continuous Load	21.80	100%	21.80
TOTAL	21.80		21.80

General Notes:
1. Typical Commercial Load Center.

Keyed Notes:
1. Combination Arc Fault / GFCI circuit breaker.

COFFMAN ENGINEERS, INC.

PSE OP TRAINING CENTER — PANEL SCHEDULE — NEW PANEL: CLC9

221158

Location: Residential Village — Feed Through: — Source: C

Ckt	Load Description	Phase	Amp	Poles	Notes	Rec.	Ltg.	Kit.	Mtr.	Htg.	Clg.	Cont.	Non.	Total
1	RANGE	A	50	2	1								6.00	6.00
3	–	B	–	–									6.00	6.00
5	HEAT PUMP	C	20	2	1								1.00	1.00
7	–	A	–	–									1.00	1.00
9	ELECTRIC WATER HEATER	B	30	2	1								2.25	2.25
11	–	C	–	–									2.25	2.25
13	SPARE C.B.	A	20	1	1									0.00
15	SPARE C.B.	B	20	1	1									0.00
17	SPARE C.B.	C	20	1	1									0.00
19	SPARE C.B.	A	20	1	1									0.00
21	SPARE C.B.	B	20	1	1									0.00
23	SPARE C.B.	C	20	1	1									0.00
25		A												0.00
27		B												0.00
29		C												0.00
31		A												0.00
33		B												0.00
35		C												0.00
37		A												0.00
39		B												0.00
41		C												0.00
2	LIGHTING	A	20	1	1								0.15	0.15
4	RECEPTACLES	B	20	1	1								0.15	0.15
6	APPLIANCE	C	20	1	1								1.50	1.50
8	APPLIANCE	A	20	1	1								1.50	1.50
10	SPARE C.B.	B	20	1	1									0.00
12	SPARE C.B.	C	20	1	1									0.00
14	SPARE C.B.	A	20	1	1									0.00
16	SPARE C.B.	B	20	1	1									0.00
18	SPARE C.B.	C	20	1	1									0.00
20	SPARE C.B.	A	20	1	1									0.00
22	SPARE C.B.	B	20	1	1									0.00
24	SPARE C.B.	C	20	1	1									0.00
26		A												0.00
28		B												0.00
30		C												0.00
32		A												0.00
34		B												0.00
36		C												0.00
38		A												0.00
40		B												0.00
42		C												0.00

Specifications

Rating (Amps):	200
Voltage (L-L):	208
Phase:	3
Wire:	4
Bus Material:	Cu
Int. Rating:	10,000A
Main Lugs Only:	–
Main Ckt Brkr:	200 A
Surface Mtd:	X
Flush Mtd:	–
Bonded Gnd:	X
Isolated Gnd:	–
200% Neutral:	–
Feed Thru:	–
Double Lug:	–
Top Feed:	–
Bottom Feed	–

Feed Thru Load:	NONE
Phase A:	0.00
Phase B:	0.00
Phase C:	0.00
Total Conn.:	0.00
Load From This Panel:	
Phase A:	8.65
Phase B:	8.40
Phase C:	4.75
Total Conn.:	21.80
Total Connected Load:	
Phase A:	8.65
Phase B:	8.40
Phase C:	4.75
Total Conn.:	21.80
Total Feeder Demand Load:	
Total:	21.80 kVA
Avg. Amps/Phase:	61 A.

CATEGORY	TOTAL CONN. LOAD (kVA)	DEMAND FACTOR	DEMAND LOAD (kVA)
Receptacles	0.00	50%>10kVA	0.00
Lighting	0.00	125%	0.00
Kitchen Equipment	0.00	NEC 220.56	0.00
Motors (Largest)	0.00	125%	0.00
Motors	0.00	100%	0.00
Heating	0.00	NEC 220.60	0.00
Cooling	0.00	NEC 220.60	0.00
Continuous Load	0.00	125%	0.00
Non-Continuous Load	21.80	100%	21.80
TOTAL	21.80		21.80

General Notes:
1. Typical Commercial Load Center.

Keyed Notes:
1. Combination Arc Fault / GFCI circuit breaker.

COFFMAN ENGINEERS, INC.

PSE OP TRAINING CENTER — PANEL SCHEDULE — NEW PANEL: CLC10

221158

Location: Residential Village — Feed Through: — Source: C

Ckt	Load Description	Phase	Amp	Poles	Notes	Rec.	Ltg.	Kit.	Mtr.	Htg.	Clg.	Cont.	Non.	Total
1	RANGE	A	50	2	1								6.00	6.00
3	–	B	–	–									6.00	6.00
5	HEAT PUMP	C	20	2	1								1.00	1.00
7	–	A	–	–									1.00	1.00
9	ELECTRIC WATER HEATER	B	30	2	1								2.25	2.25
11	–	C	–	–									2.25	2.25
13	SPARE C.B.	A	20	1	1									0.00
15	SPARE C.B.	B	20	1	1									0.00
17	SPARE C.B.	C	20	1	1									0.00
19	SPARE C.B.	A	20	1	1									0.00
21	SPARE C.B.	B	20	1	1									0.00
23	SPARE C.B.	C	20	1	1									0.00
25		A												0.00
27		B												0.00
29		C												0.00
31		A												0.00
33		B												0.00
35		C												0.00
37		A												0.00
39		B												0.00
41		C												0.00
2	LIGHTING	A	20	1	1								0.15	0.15
4	RECEPTACLES	B	20	1	1								0.15	0.15
6	APPLIANCE	C	20	1	1								1.50	1.50
8	APPLIANCE	A	20	1	1								1.50	1.50
10	SPARE C.B.	B	20	1	1									0.00
12	SPARE C.B.	C	20	1	1									0.00
14	SPARE C.B.	A	20	1	1									0.00
16	SPARE C.B.	B	20	1	1									0.00
18	SPARE C.B.	C	20	1	1									0.00
20	SPARE C.B.	A	20	1	1									0.00
22	SPARE C.B.	B	20	1	1									0.00
24	SPARE C.B.	C	20	1	1									0.00
26		A												0.00
28		B												0.00
30		C												0.00
32		A												0.00
34		B												0.00
36		C												0.00
38		A												0.00
40		B												0.00
42		C												0.00

Specifications

Rating (Amps):	200
Voltage (L-L):	208
Phase:	3
Wire:	4
Bus Material:	Cu
Int. Rating:	10,000A
Main Lugs Only:	–
Main Ckt Brkr:	200 A
Surface Mtd:	X
Flush Mtd:	–
Bonded Gnd:	X
Isolated Gnd:	–
200% Neutral:	–
Feed Thru:	–
Double Lug:	–
Top Feed:	–
Bottom Feed	–

Feed Thru Load:	NONE
Phase A:	0.00
Phase B:	0.00
Phase C:	0.00
Total Conn.:	0.00
Load From This Panel:	
Phase A:	8.65
Phase B:	8.40
Phase C:	4.75
Total Conn.:	21.80
Total Connected Load:	
Phase A:	8.65
Phase B:	8.40
Phase C:	4.75
Total Conn.:	21.80
Total Feeder Demand Load:	
Total:	21.80 kVA
Avg. Amps/Phase:	61 A.

CATEGORY	TOTAL CONN. LOAD (kVA)	DEMAND FACTOR	DEMAND LOAD (kVA)
Receptacles	0.00	50%>10kVA	0.00
Lighting	0.00	125%	0.00
Kitchen Equipment	0.00	NEC 220.56	0.00
Motors (Largest)	0.00	125%	0.00
Motors	0.00	100%	0.00
Heating	0.00	NEC 220.60	0.00
Cooling	0.00	NEC 220.60	0.00
Continuous Load	0.00	125%	0.00
Non-Continuous Load	21.80	100%	21.80
TOTAL	21.80		21.80

General Notes:
1. Typical Commercial Load Center.

Keyed Notes:
1. Combination Arc Fault / GFCI circuit breaker.

COFFMAN ENGINEERS, INC.

PSE OP TRAINING CENTER — PANEL SCHEDULE — NEW PANEL: CLC11

221158

Location: Residential Village — Feed Through: — Source: C

Ckt	Load Description	Phase	Amp	Poles	Notes	Rec.	Ltg.	Kit.	Mtr.	Htg.	Clg.	Cont.	Non.	Total
1	RANGE	A	50	2	1								6.00	6.00
3	–	B	–	–									6.00	6.00
5	HEAT PUMP	C	20	2	1								1.00	1.00
7	–	A	–	–									1.00	1.00
9	ELECTRIC WATER HEATER	B	30	2	1								2.25	2.25
11	–	C	–	–									2.25	2.25
13	SPARE C.B.	A	20	1	1									0.00
15	SPARE C.B.	B	20	1	1									0.00
17	SPARE C.B.	C	20	1	1									0.00
19	SPARE C.B.	A	20	1	1									0.00
21	SPARE C.B.	B	20	1	1									0.00
23	SPARE C.B.	C	20	1	1									0.00
25		A												0.00
27		B												0.00
29		C												0.00
31		A												0.00
33		B												0.00
35		C												0.00
37		A												0.00
39		B												0.00
41		C												0.00
2	LIGHTING	A	20	1	1								0.15	0.15
4	RECEPTACLES	B	20	1	1								0.15	0.15
6	APPLIANCE	C	20	1	1								1.50	1.50
8	APPLIANCE	A	20	1	1								1.50	1.50
10	SPARE C.B.	B	20	1	1									0.00
12	SPARE C.B.	C	20	1	1									0.00
14	SPARE C.B.	A	20	1	1									0.00
16	SPARE C.B.	B	20	1	1									0.00
18	SPARE C.B.	C	20	1	1									0.00
20	SPARE C.B.	A	20	1	1									0.00
22	SPARE C.B.	B	20	1	1									0.00
24	SPARE C.B.	C	20	1	1									0.00
26		A												0.00
28		B												0.00
30		C												0.00
32		A												0.00
34		B												0.00
36		C												0.00
38		A												0.00
40		B												0.00
42		C												0.00

Specifications

Rating (Amps):	200
Voltage (L-L):	208
Phase:	3
Wire:	4
Bus Material:	Cu
Int. Rating:	10,000A
Main Lugs Only:	–
Main Ckt Brkr:	200 A
Surface Mtd:	X
Flush Mtd:	–
Bonded Gnd:	X
Isolated Gnd:	–
200% Neutral:	–
Feed Thru:	–
Double Lug:	–
Top Feed:	–
Bottom Feed	–

Feed Thru Load:	NONE
Phase A:	0.00
Phase B:	0.00
Phase C:	0.00
Total Conn.:	0.00
Load From This Panel:	
Phase A:	8.65
Phase B:	8.40
Phase C:	4.75
Total Conn.:	21.80
Total Connected Load:	
Phase A:	8.65
Phase B:	8.40
Phase C:	4.75
Total Conn.:	21.80
Total Feeder Demand Load:	
Total:	21.80 kVA
Avg. Amps/Phase:	61 A.

CATEGORY	TOTAL CONN. LOAD (kVA)	DEMAND FACTOR	DEMAND LOAD (kVA)
Receptacles	0.00	50%>10kVA	0.00
Lighting	0.00	125%	0.00
Kitchen Equipment	0.00	NEC 220.56	0.00
Motors (Largest)	0.00	125%	0.00
Motors	0.00	100%	0.00
Heating	0.00	NEC 220.60	0.00
Cooling	0.00	NEC 220.60	0.00
Continuous Load	0.00	125%	0.00
Non-Continuous Load	21.80	100%	21.80
TOTAL	21.80		21.80

General Notes:
1. Typical Commercial Load Center.

Keyed Notes:
1. Combination Arc Fault / GFCI circuit breaker.

COFFMAN ENGINEERS, INC.

100% CD SET

REV	ISSUED FOR	DATE

SCALE: NONE

PSE - OPERATIONAL TRAINING CENTER

PANEL SCHEDULES

PROJECT No:	221158
DRAWN BY:	RMF
CHECKED BY:	CJB

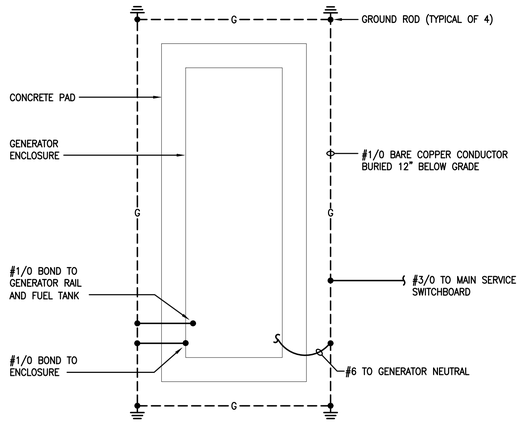

1 E7.01

GENERATOR GROUNDING DETAIL

SCALE: NONE

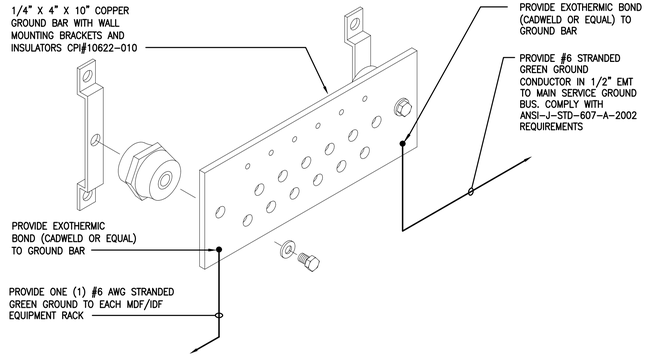

NOTE: NOT ALL PARTS AND PART NUMBERS ARE SHOWN. THE CONTRACTOR IS RESPONSIBLE FOR A COMPLETE WORKING INSTALLATION INCLUDING, MISCELLANEOUS APPURTENANCES.

2 E7.01

GROUND BUS BAR ASSEMBLY

SCALE: NONE

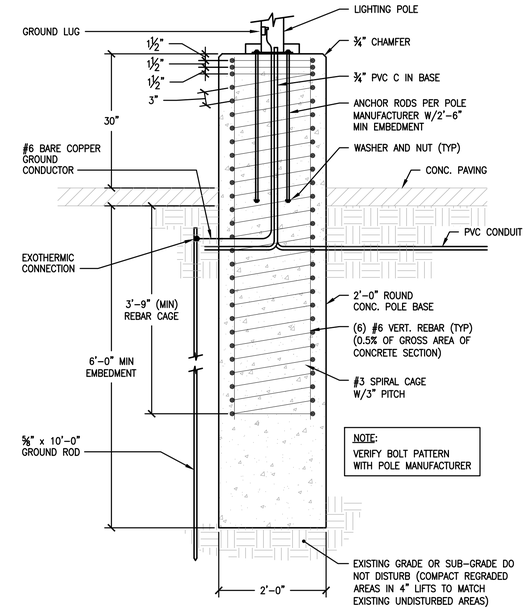

3 E7.01

LIGHTING AND CAMERA POLE BASE DETAIL

SCALE: NONE

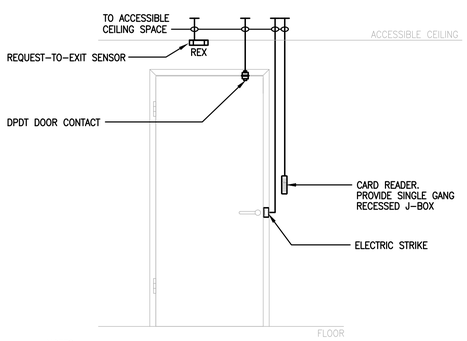

NOTES:

1. ALL CONDUIT IS 3/4" UNLESS NOTED. ALL DEVICES, BOXES, CONDUIT ON SECURE SIDE OF DOOR EXCEPT CARD READER.
2. PROVIDE ALL WIRING PER VENDOR SHOP DRAWINGS.
3. PROVIDE DPDT DOOR CONTACT. ONE CONTACT FOR ACCESS CONTROL AND ONE CONTACT FOR INTRUSION DETECTION.

SINGLE DOOR WITH ELECTRIC STRIKE AND CARD READER

4 E7.01

SECURITY DOOR DETAIL

NOT TO SCALE

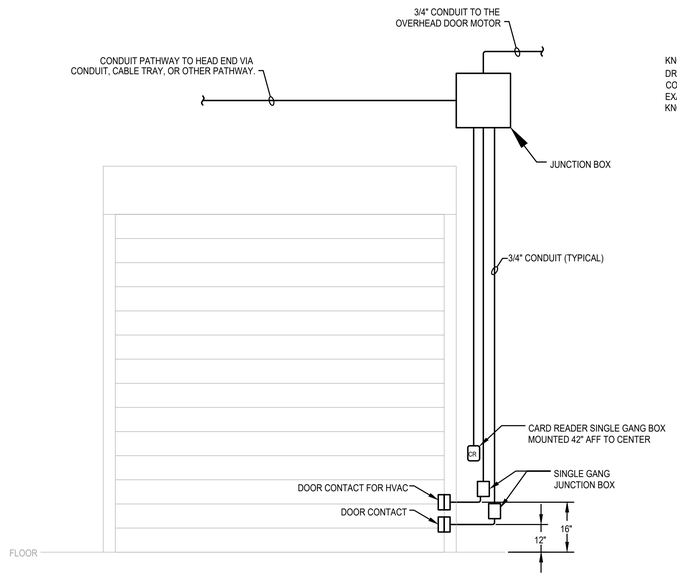

5 E7.01

OVERHEAD DOOR ROUGH-IN FOR CARD READER & DOOR CONTACTS

NOT TO SCALE

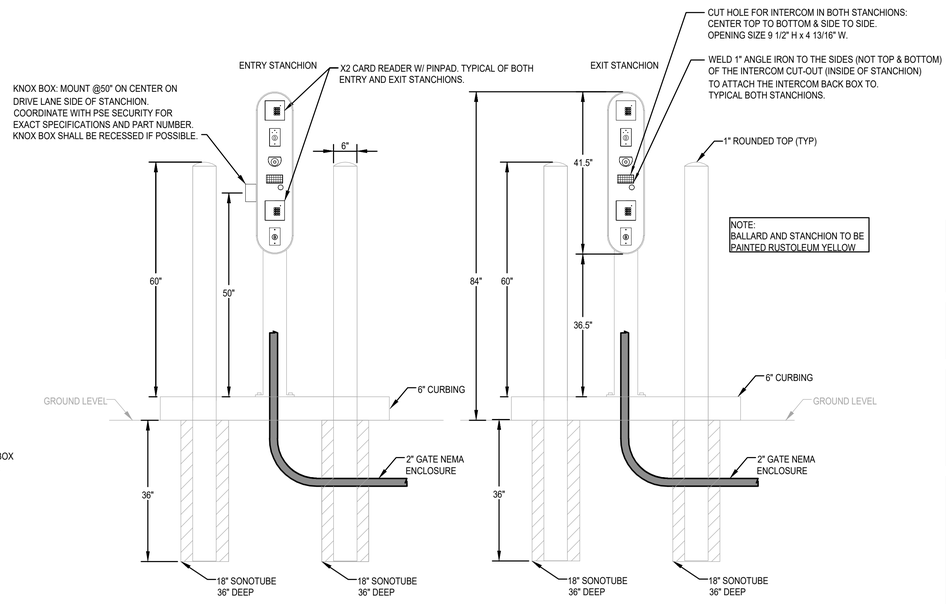

6 E7.01

BOLLARD AND STANCHION LAYOUT, ENTRY & EXIT

NOT TO SCALE

PRCNC20240216

ZERVAS
ARCHITECTURE | INTERIOR DESIGN
zervasgroup.com
209 Prospect Street
Bellingham, WA 98225
360.734.4744

COFFMAN ENGINEERS
1101 2nd Avenue,
Suite 400
Seattle, WA 98101
ph 206.623.0717
www.coffman.com

CHRISTOPHER J. BAKER — STATE OF WASHINGTON — 31344 — REGISTERED PROFESSIONAL ENGINEER
1/25/2024

City of Puyallup
Development & Permitting Services
ISSUED PERMIT
Building | Planning | Engineering | Public Works | Fire | Traffic

100% CD SET

REV	ISSUED FOR	DATE

SCALE: NONE

PSE - OPERATIONAL TRAINING CENTER

DETAILS

PROJECT No:	221158
DRAWN BY:	RMF
CHECKED BY:	CJB
DATE ISSUED:	01/26/24

E7.01

© 2022

PRCNC20240216

A PORTION OF THE NE 1/4 OF THE NE 1/4 OF SECTION 21, T. 20 N., R. 4 E., W.M.

LEGAL DESCRIPTION

THAT PORTION OF THE WILLIAM BENSTON DONATION LAND CLAIM NO. 47 IN SECTIONS 16 AND 21, TOWNSHIP 20 NORTH, RANGE 4 EAST OF THE W.M., IN PIERCE COUNTY, WASHINGTON, LYING SOUTHERLY OF CHICAGO, MILWAUKEE & ST. PAUL RAILROAD RIGHT OF WAY AND LYING WESTERLY OF NORTH MERIDIAN (AKA SR 161) AND LYING NORTHERLY OF TODD ROAD NORTHWEST (AKA 23RD AVENUE NORTHWEST) AND LYING EASTERLY OF THAT 15 FOOT STRIP CONVEYED TO PIERCE COUNTY FOR ROAD PURPOSES (4TH STREET NORTHWEST, AKA DESHAUX LANE) NY DEED RECORDED UNDER RECORDING NO. 1783507.

(ALSO KNOWN AS REVISED LOT 1 OF DECLARATION OF LOT BOUNDARY ADJUSTMENT RECORDED UNDER RECORDING NO. 202303030112)

EXCEPTIONS FROM TITLE REPORT

LEGAL DESCRIPTION, EASEMENTS, COVENANTS, CONDITIONS AND RESTRICTIONS ARE FROM FIRST AMERICAN TITLE INSURANCE COMPANY ALTA COMMITMENT FOR TITLE INSURANCE, FILE NO. NCS-1154711-WA1 REVISION NO. 2 DATED MARCH 23, 2023. IN PREPARING THIS SURVEY MAP, ESM CONSULTING ENGINEERS, LLC (ESM) HAS NOT CONDUCTED AN INDEPENDENT TITLE SEARCH NOR IS ESM AWARE OF ANY TITLE ISSUES AFFECTING THE PROPERTY OTHER THAN THOSE SHOWN ON THIS SURVEY MAP. ESM HAS WHOLLY RELIED ON SAID REFERENCED REPORT TO PREPARE THIS SURVEY MAP AND THEREFORE QUALIFIES THE MAP'S ACCURACY AND COMPLETENESS TO THAT EXTENT.

1–8. NOT REPORTED HEREIN. SEE TITLE REPORT FOR ADDITIONAL INFORMATION.

9. SUBJECT TO LIEN OF REAL ESTATE EXCISE TAX UPON SALE OF SAID PREMISES, OR TRANSFER OF A CONTROLLING INTEREST, IF UNPAID.

10. SUBJECT TO LIABILITY, IF ANY, FOR PRO-RATA PORTION OF REAL PROPERTY TAXES WHICH ARE CARRIED ON THE PIERCE COUNTY TAX ROLLS, AS TAX ACCOUNT NO. 042021-1-030, ARE EXEMPT. EXCEPTION CANNOT BE PLOTTED.

11. EXCEPTION HAS BEEN INTENTIONALLY DELETED FROM TITLE REPORT.

12. SUBJECT TO THAT AGREEMENT TO SUPPLY WATER AND THE TERMS AND CONDITIONS THEREOF AS CONTAINED IN THAT INSTRUMENT RECORDED UNDER RECORDING NO. 816277. EXCEPTION CANNOT BE PLOTTED.

13. EXCEPTION HAS BEEN INTENTIONALLY DELETED FROM TITLE REPORT.

14. EXCEPTION HAS BEEN INTENTIONALLY DELETED FROM TITLE REPORT.

15. SUBJECT TO THAT AGREEMENT REGARDING WATER AND SEWER CONNECTIONS AND THE TERMS AND CONDITIONS THEREOF AS CONTAINED IN THAT INSTRUMENT RECORDED UNDER RECORDING NO. 8206280180. EXCEPTION CANNOT BE PLOTTED.

16. SUBJECT TO THAT EASEMENT AND THE TERMS AND CONDITIONS THEREOF FOR COMMUNICATIONS PURPOSES AS GRANTED TO SPRINT COMMUNICATIONS COMPANY AND LEVEL 3 COMMUNICATIONS BY THAT INSTRUMENT RECORDED UNDER RECORDING NO. 201310140202. THE LOCATION OF SAID EASEMENT CANNOT BE DETERMINED BY THE INSTRUMENT OF RECORD. THE APPROXIMATE LOCATION OF THE PAINTED AND AS-BUILT LINE IS DEPICTED HEREIN. DOES NOT AFFECT THE SURVEYED PROPERTY.

17. EXCEPTION HAS BEEN INTENTIONALLY DELETED FROM TITLE REPORT.

18. NOT SUBJECT TO ANY QUESTION THAT MAY ARISE DUE TO THE SHIFTING AND/OR CHANGING IN THE COURSE OF SIMONS CREEK. THERE IS NO CREEK LOCATED ON THE SURVEYED PROPERTY.

19. NOT SUBJECT TO RIGHTS OF THE GENERAL PUBLIC TO THE UNRESTRICTED USE OF ALL THE WATERS OF A NAVIGABLE BODY OF WATER NOT ONLY FOR THE PRIMARY PURPOSE OF NAVIGATION, BUT ALSO FOR COROLLARY PURPOSES; INCLUDING (BUT NOT LIMITED TO FISHING, BOATING, BATHING, SWIMMING, WATER SKIING AND OTHER RELATED RECREATIONAL PURPOSES, AS THOSE WATERS MAY AFFECT THE TIDELANDS, SHORELANDS OR ADJOINING UPLANDS AND WHETHER THE LEVEL OF THE WATER HAS BEEN RAISED NATURALLY OR ARTIFICIALLY TO A MAINTAINED OR FLUCTUATING LEVEL, ALL AS FURTHER DEFINED BY THE DECISIONAL LAW OF THIS STATE. (AFFECTS ALL OF THE PREMISES SUBJECT TO SUCH SUBMERGENCE). THERE IS NO CREEK LOCATED ON THE SURVEYED PROPERTY.

20–24. NOT REPORTED HEREIN.

25. SUBJECT TO RESTRICTIONS, CONDITIONS, DEDICATIONS, NOTES, EASEMENTS AND PROVISIONS, IF ANY, AS CONTAINED AND/OR DELINEATED ON THE FACE OF THE DECLARATION OF LOT COMBINATION RECORDED UNDER RECORDING NO. 202303030112.

NOTES

1. THIS SURVEY WAS PREPARED FOR THE EXCLUSIVE USE OF TRAMMELL CROW COMPANY, PUGET SOUND ENERGY, INC., A WASHINGTON CORPORATION AND FIRST AMERICAN TITLE INSURANCE COMPANY. THE RIGHT TO RELY ON OR USE THIS SURVEY DOES NOT EXTEND TO ANY UNNAMED PARTY WITHOUT EXPRESS RE-CERTIFICATION BY ESM CONSULTING ENGINEERS, L.L.C., AND/OR THE PROFESSIONAL LAND SURVEYOR WHOSE SEAL APPEARS HEREON.

2. THE LEGAL DESCRIPTION HEREON DESCRIBES THE SAME PROPERTY AS INSURED IN THE TITLE COMMITMENT DESCRIBED HEREIN. THERE ARE NO TITLE GAPS OR OVERLAPS BETWEEN THE LEGAL DESCRIPTIONS OF THE ADJOINING PROPERTIES.

3. NO CORNERS HAVE BEEN SET IN CONJUNCTION WITH THIS SURVEY.

4. ADDRESS FOR THE SURVEYED PROPERTY IS 325 TODD ROAD NW, PUYALLUP, WA 98371.

5. FLOOD ZONE DESIGNATION FOR THE SURVEYED PROPERTY IS ZONE X (AREAS DETERMINED TO BE OUTSIDE THE 0.2% ANNUAL CHANCE FLOODPLAIN), ACCORDING TO THE FEDERAL EMERGENCY MANAGEMENT AGENCY'S NATIONAL FLOOD INSURANCE RATE MAP, PANEL NUMBER 333 OF 1375, PIERCE COUNTY, WASHINGTON, MAP NO. 53053C0333E, EFFECTIVE DATE: MARCH 7, 2017.

6. THE SURVEYED PROPERTY DEPICTED AND DESCRIBED HEREON ENCLOSES A TOTAL AREA OF 268,785 SQUARE FEET (6.171 ACRES), MORE OR LESS.

7. A ZONING REPORT ENTITLED "PSE OPERATIONAL TRAINING CENTER – 221 AND 325 TODD ROAD NW PUYALLUP WA" PREPARED FOR TRAMMELL CROW COMPANY BY ZONING RESEARCH GROUP, REPORT NO. 23-00201 DATED FEBRUARY 6, 2023 WAS PROVIDED. THE CURRENT ZONING OF THE PROPERTY IS "ML LIMITED MANUFACTURING ZONE" AS SET OUT ON PAGE 2 OF SAID REPORT. SETBACKS AND OTHER RESTRICTIONS REQUIRED IN THIS ZONE ARE SET OUT ON PAGE 4 OF SAID REPORT AND INCLUDE 20 FOOT MINIMUM FRONT SETBACK AND 10 FOOT MINIMUM STREET SIDE YARD SETBACK. THERE ARE NO REQUIRED SIDE OR REAR SETBACKS. IN ADDITION, THE MAXIMUM LOT COVERAGE IS 60% AND MAXIMUM BUILDING HEIGHT IS 50 FEET. FOR FURTHER INFORMATION SEE THE REFERENCED ZONING REPORT.

8. THERE ARE NO BUILDINGS ON THE SURVEYED PROPERTY.

9. THERE ARE NO MARKED PARKING STALLS ON THE SURVEYED PROPERTY.

10. THERE ARE NO DIVISION OR PARTY WALLS ON THE SURVEYED PROPERTY.

11. THE LOCATIONS OF UTILITIES SHOWN HEREON ARE DETERMINED BASED ON THE FOLLOWING METHODS:

A. FIELD LOCATION OF OBSERVED SURFACE STRUCTURES EVIDENT AT THE TIME OF FIELD SURVEY.
B. INFORMATION DELINEATED ON RECORD DRAWINGS FURNISHED BY OTHERS INDICATING REPORTED UTILITY LOCATIONS.
C. LOCATING OF CONDUCTIBLE AND NON-CONDUCTIBLE BURIED UTILITIES APPLIED PROFESSIONAL SERVICES, INC. (APS) ON DECEMBER 17TH AND DECEMBER 20TH, 2022 AND BY MT. VIEW UTILITY LOCATING SERVICE ON AUGUST 9, 2023 UTILIZING THE AVAILABLE MAPS AND DRAWINGS.

12. THERE IS NO EVIDENCE OF RECENT EARTH MOVING WORK, BUILDING CONSTRUCTION OR BUILDING ADDITIONS ON THE SURVEYED PROPERTY. FORMER BUILDINGS LOCATED WITHIN THE SURVEYED PROPERTY HAVE BEEN REMOVED.

13. ACCORDING TO THE CITY OF PUYALLUP SIX YEAR TRANSPORTATION IMPROVEMENT PROGRAM (TIP) 2018-2023 SUMMARY SHEET DOWNLOADED FROM THE CITY'S WEBSITE ON DECEMBER 6, 2022, THERE ARE NO PLANNED ROAD IMPROVEMENTS FOR THAT PORTION OF TODD ROAD NW WHICH ADJOINS THE SURVEYED PROPERTY.

14. THE SURVEYED PROPERTY ADJOINS THE PUBLIC RIGHT OF WAY OF TODD ROAD NW TO THE SOUTH AND 4TH STREET NW TO THE WEST.

15. THERE ARE NO OBSERVABLE CEMETERIES OR BURIAL GROUNDS.

16. THERE ARE NO PONDS, LAKES, SPRINGS, OR RIVERS ON THE SURVEYED PROPERTY.

17. ALL TIES ARE SHOWN EITHER ALONG THE PROPERTY LINE OR PERPENDICULAR TO THE PROPERTY LINE OF THE SURVEYED PROPERTY. OFFSET DISTANCES ARE SHOWN ON THE SAME SIDE OF THE PROPERTY LINE THAT THE OBJECT APPEARS.

18. UNDERGROUND LOCATION FIRM WAS NOT ABLE TO IDENTIFY UNDERGROUND UTILITIES WITHIN THE SURVEYED PROPERTY. SURFACE FEATURES INDICATE THAT THERE IS UNDERGROUND WATER.

19. OWNER IS PUGET SOUND ENERGY, INC.

20. SURVEY REPRESENTS SITE CONDITIONS AS OF JANUARY 3, 2023.

SURVEY INSTRUMENTATION

SURVEYING PERFORMED IN CONJUNCTION WITH THIS RECORD OF SURVEY UTILIZED THE FOLLOWING EQUIPMENT AND PROCEDURES:

TWO LEICA SYSTEM 500 DUAL FREQUENCY GPS RECEIVERS, ONE 10" TOTAL STATION MAINTAINED TO MANUFACTURER'S SPECIFICATIONS AS REQUIRED BY WAC-332-130-100

PROCEDURE USED : REAL TIME KINEMATIC AND RAPID STATIC GPS AND FIELD TRAVERSE WITH ACCURACY MEETING OR EXCEEDING THE REQUIREMENTS OF WAC-332-130-090

BASIS OF HORIZONTAL DATUM

WASHINGTON COORDINATE SYSTEM (WCS) – SOUTH ZONE (BASED UPON NAD 83/2011) UTILIZING THE WASHINGTON STATE REFERENCE NETWORK (WSRN) IN DECEMBER OF 2022.

BASIS OF VERTICAL DATUM

NORTH AMERICAN VERTICAL DATUM OF 1988 (NAVD 88) UTILIZING THE WASHINGTON STATE REFERENCE NETWORK (WSRN) IN DECEMBER OF 2022.

VICINITY MAP

NOT TO SCALE

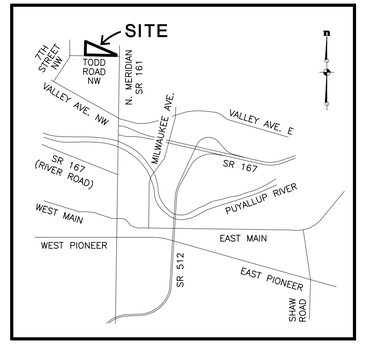

City of Puyallup
Development & Permitting Services
ISSUED PERMIT

Building	Planning
Engineering	Public Works
Fire	Traffic

SURVEY REFERENCES

(R1) RECORD OF SURVEYS BY LEROY SURVEYORS – RECORDING NOS. 8103050155 AND 8201280140

(R2) RECORD OF SURVEY BY WHITACRE ENGINEERS, INC. – RECORDING NO. 8407170263

(R3) RECORD OF SURVEYS BY PAC-TECH ENGINEERS, INC. – RECORDING NOS. 9309160347 AND 9405100543

(R4) RECORD OF SURVEY BY PARAMETRIX, INC. – RECORDING NO. 9508040077

(R5) RECORD OF SURVEYS BY DAVID EVANS AND ASSOCIATES, INC. – RECORDING NOS. 9709290267, 200110115007, 200406025007 AND 200812225002

(R6) RECORD OF SURVEYS BY APEX ENGINEERING – RECORDING NOS. 200409285006 AND 201110265002

(R7) RECORD OF SURVEY BY KENNETH R. ANDERSON AND ASSOCIATES, INC. – RECORDING NO. 200506095003

(R8) RECORD OF SURVEY BY PACIFIC NORTHWEST LAND SURVEYORS, LLC – RECORDING NO. 200709255006

(R9) RECORD OF SURVEYS BY BARGHAUSEN CONSULTING ENGINEERS, INC. – RECORDING NOS. 201903155003 AND 201911185001

(R10) RAILROAD PLANS

BOUNDARY CONTROL AND SHEET INDEX

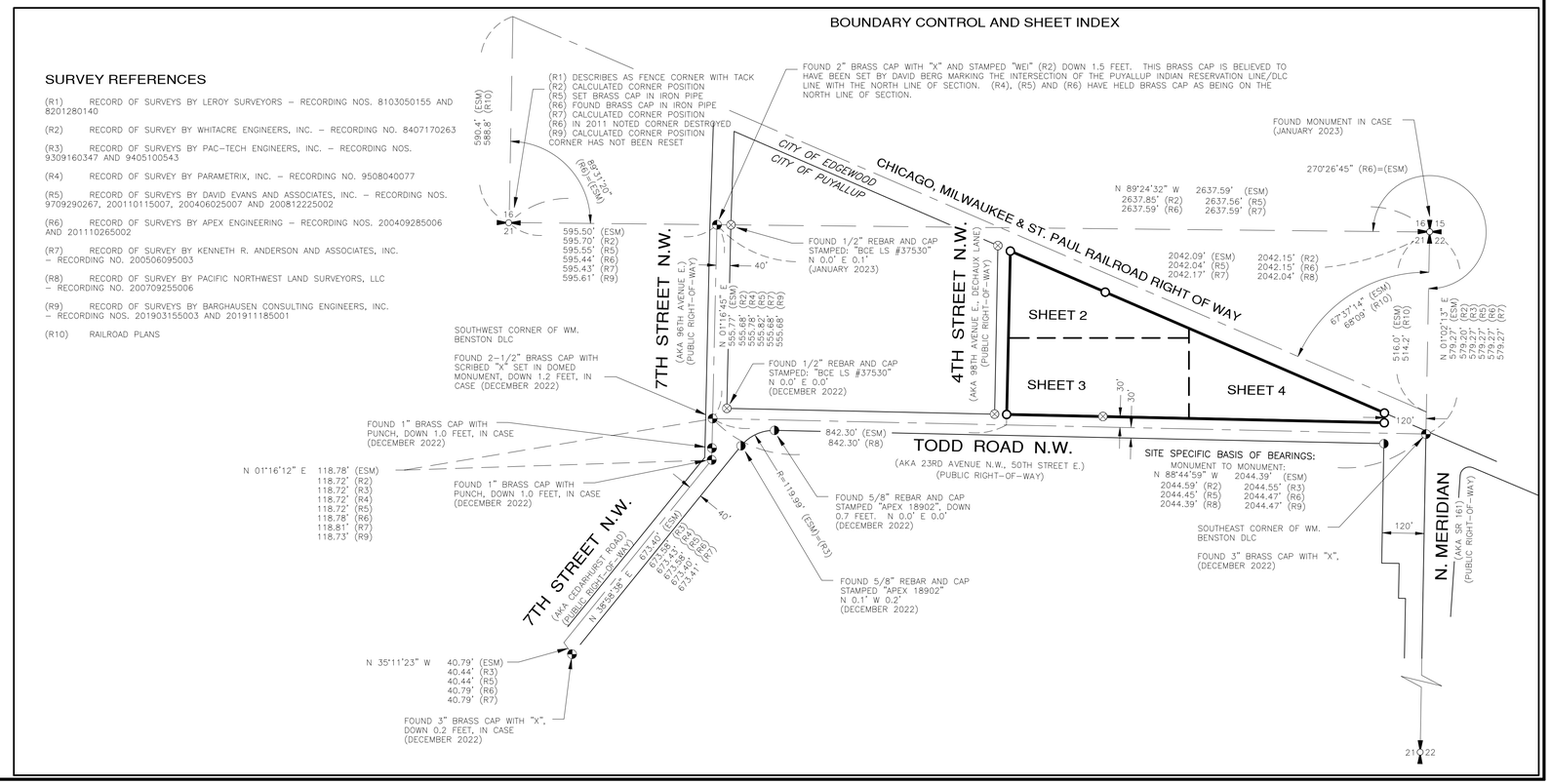

NO.	DESCRIPTION/DATE	BY
0	ORIGINAL SURVEY FEBRUARY 2023	ZL

CYNTHIA A. FLOOD — STATE OF WASHINGTON — 29281 — REGISTERED PROFESSIONAL LAND SURVEYOR

CONSULTING ENGINEERS LLC
33400 8th Ave S, Suite 205
Federal Way, WA 98003
FEDERAL WAY (253) 838-6113
LYNNWOOD (425) 297-9900
www.esmcivil.com
Land Planning
Landscape Architecture
Land Surveying
Project Management
Civil Engineering
Public Works

TRAMMELL CROW COMPANY

PUYALLUP TRAINING CENTER

WASHINGTON

SITE PLAN

CITY OF PUYALLUP

JOB NO.:	2110-002-022
DWG. NAME:	SITE-01
DESIGNED BY:	
DRAWN BY:	C.A.F./R.F.G.
CHECKED BY:	C.A.F.
DATE:	2024-01-19
DATE OF PRINT:	

SITE-01

1 OF 4 SHEETS

File: \\esm8\ENGR\ESM-JOBS\2110\002\022\Survey Plots\SITE-01.dwg
Plotted: 1/19/2024 7:46 AM Plotted By: Rosine Garcia

PRCNC20240216

A PORTION OF THE NE 1/4 OF THE NE 1/4 OF SECTION 21, T. 20 N., R. 4 E., W.M.

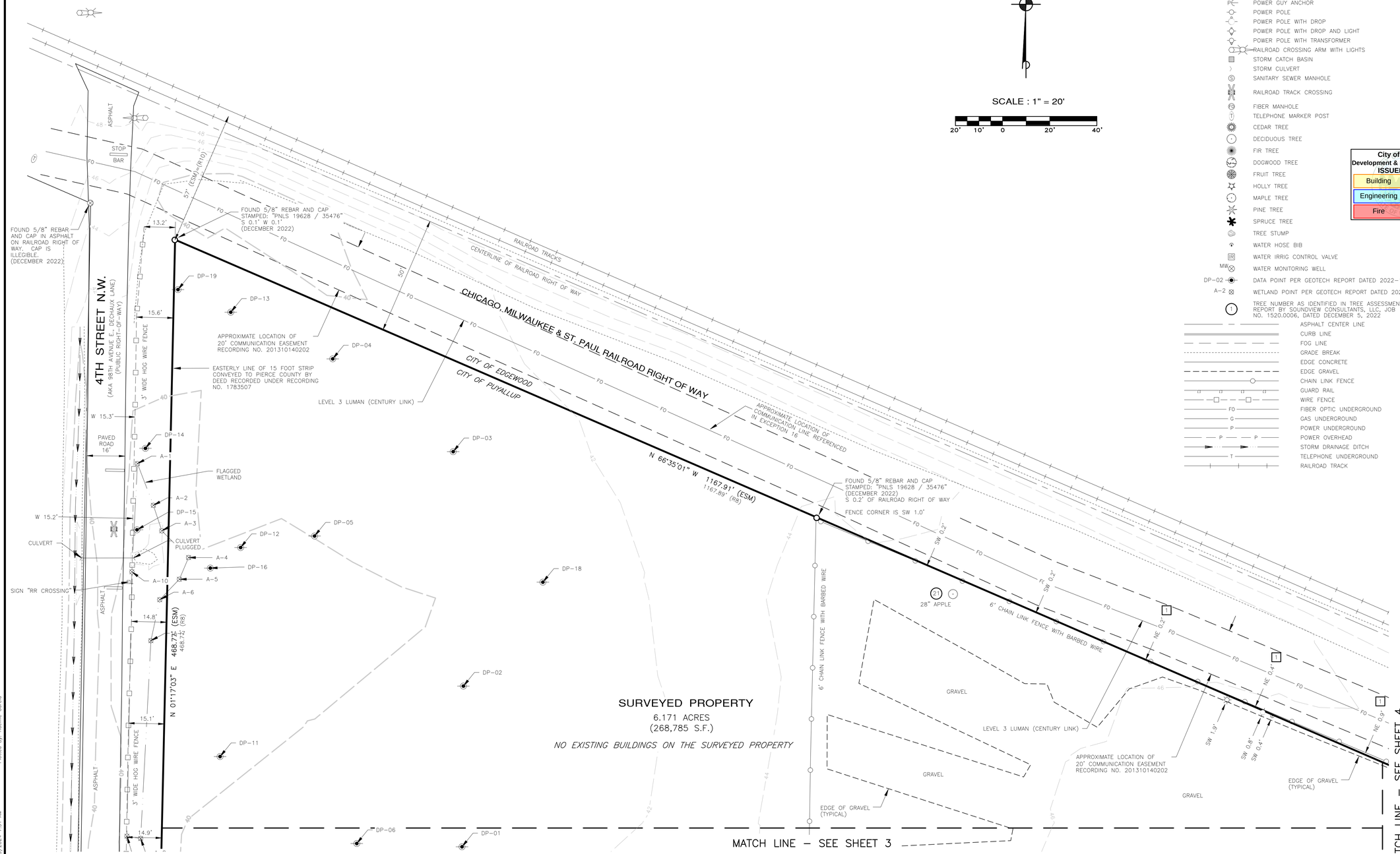

n

SCALE : 1" = 20'

20' 10' 0 20' 40'

LEGEND

- 1 — INDICATES POTENTIAL ENCROACHMENT NUMBER HEREIN
- FOUND MONUMENT AS NOTED
- FOUND 5/8" REBAR AND CAP STAMPED: "PNLS 19628 / 35476"
- FOUND 5/8" REBAR AND CAP STAMPED "APEX 18902"
- FOUND CORNER AS NOTED
- GATE END
- LIGHT POST WITH ARM
- LIGHT POST
- SIGN
- STREET SIGN
- POWER GUY ANCHOR
- POWER POLE
- POWER POLE WITH DROP
- POWER POLE WITH DROP AND LIGHT
- POWER POLE WITH TRANSFORMER
- RAILROAD CROSSING ARM WITH LIGHTS
- STORM CATCH BASIN
- STORM CULVERT
- SANITARY SEWER MANHOLE
- RAILROAD TRACK CROSSING
- FIBER MANHOLE
- TELEPHONE MARKER POST
- CEDAR TREE
- DECIDUOUS TREE
- FIR TREE
- DOGWOOD TREE
- FRUIT TREE
- HOLLY TREE
- MAPLE TREE
- PINE TREE
- SPRUCE TREE
- TREE STUMP
- WATER HOSE BIB
- IR — WATER IRRIG CONTROL VALVE
- MW — WATER MONITORING WELL
- DP-02 — DATA POINT PER GEOTECH REPORT DATED 2022-10-07
- A-2 — WETLAND POINT PER GEOTECH REPORT DATED 2022-10-07
- 1 — TREE NUMBER AS IDENTIFIED IN TREE ASSESSMENT REPORT BY SOUNDVIEW CONSULTANTS, LLC, JOB NO. 1520.0006, DATED DECEMBER 5, 2022
- ASPHALT CENTER LINE
- CURB LINE
- FOG LINE
- GRADE BREAK
- EDGE CONCRETE
- EDGE GRAVEL
- CHAIN LINK FENCE
- GUARD RAIL
- WIRE FENCE
- FO — FIBER OPTIC UNDERGROUND
- G — GAS UNDERGROUND
- P — POWER UNDERGROUND
- P — POWER OVERHEAD
- STORM DRAINAGE DITCH
- T — TELEPHONE UNDERGROUND
- RAILROAD TRACK

City of Puyallup
Development & Permitting Services
ISSUED PERMIT

Building	Planning
Engineering	Public Works
Fire	Traffic

REVISIONS		
NO.	DESCRIPTION/DATE	BY
0	ORIGINAL SURVEY FEBRUARY 2023	ZL

CYNTHIA A. FLOOD — STATE OF WASHINGTON — 29281 — REGISTERED PROFESSIONAL LAND SURVEYOR

CONSULTING ENGINEERS LLC
32400 Weyerhaeuser Way S. Suite 205
Federal Way, WA 98003
FEDERAL WAY (253) 838-6113
LYNNWOOD (425) 297-9900
www.esmcivil.com
Land Planning
Landscape Architecture
Land Surveying
Project Management
Civil Engineering
Public Works

TRAMMELL CROW COMPANY

PUYALLUP TRAINING CENTER

SITE PLAN

CITY OF PUYALLUP — WASHINGTON

JOB NO.:	2110-002-022
DWG. NAME:	SITE-02
DESIGNED BY:	
DRAWN BY:	C.A.F./R.F.G.
CHECKED BY:	C.A.F.
DATE:	2024-01-19
DATE OF PRINT:	

SITE-02

2 OF 4 SHEETS

File: \\esmnt9\ DWGS\ESM_dwgs\2110\002\2023\Survey Prep\SITE-02.dwg
Plotted: 1/19/2024 7:51 AM
Plotted By: Raelina Gonda

PRCNC20240216

A PORTION OF THE NE 1/4 OF THE NE 1/4 OF SECTION 21, T. 20 N., R. 4 E., W.M.

n

SEE LEGEND ON SHEET 2

SCALE : 1" = 20'

20' 10' 0 20' 40'

City of Puyallup
Development & Permitting Services
ISSUED PERMIT

Building	Planning
Engineering	Public Works
Fire	Traffic

MATCH LINE – SEE SHEET 2

– SEE SHEET 4 MATCH LINE

SURVEYED PROPERTY
6.171 ACRES
(268,785 S.F.)
NO EXISTING BUILDINGS ON THE SURVEYED PROPERTY

4TH STREET N.W.
(AKA 98TH AVENUE E., DECHAUX LANE)
(PUBLIC RIGHT-OF-WAY)

TODD ROAD N.W.
(AKA 23RD AVENUE N.W., 50TH STREET E.)
(PUBLIC RIGHT-OF-WAY)

N 01°17'03" E 468.77' (ESM)
468.77' (R&I)

N 88°44'59" W 1081.98' (ESM)
1081.96' (R&I)

SITE SPECIFIC BASIS OF BEARINGS:
MONUMENTED CENTERLINE = N 88°44'59" W 2044.39' (ESM)

EASTERLY LINE OF 15 FOOT STRIP CONVEYED TO PIERCE COUNTY BY DEED RECORDED UNDER RECORDING NO. 1783507

SIGN "RAILROAD CROSSING AHEAD"

SIGN "TODD RD NW" "4TH ST NW"

SIGN "SPEED LIMIT 25"

SDMH TYPE II, 48"ø CONCRETE
RIM=42.42
IE=37.39, 12"ø RCP NW
IE=36.84, 12"ø RCP W
IE=36.88, 12"ø RCP E
SUMP=34.72

STORM CULVERT
IE=39.04 16" RCP SE

FOUND 5/8" REBAR AND CAP STAMPED: "PNLS 19628 / 35476" N 0.1' W 0.2' (DECEMBER 2022)

FOUND 5/8" REBAR AND CAP IN ASPHALT. CAP IS ILLEGIBLE. N 0.3' OF NORTHERLY MARGIN. (DECEMBER 2022)

NORTHERLY EDGE OF GRAVEL

SIGN "NO TRUCK PARKING <-->" S 0.7'

SIGN "NO TRUCK PARKING <-->" S 0.1'

3' WIDE TRENCH

PROPOSED 3' RIGHT OF WAY DEDICATION

20' COMMUNICATION EASEMENT RECORDING NO. 201310140202

3' WIDE TRENCH LEVEL 3 MCI & ZAYO

EXISTING ACCESS POINT

FOUND 3/4" IRON PIPE N 0.3' OF NORTHERLY MARGIN (DECEMBER 2022)

SDMH, RIM=44.12
TYPE II, 48"ø CONCRETE
IE=37.89, 12"ø RCP E
IE=37.76, 12"ø RCP W
SUMP=35.42

6' CHAIN LINK FENCE WITH BARBED WIRE

GATE

SDCB, RIM=41.67
IE=38.27, 12"ø RCP E
IE=38.07, 12"ø RCP W
SUMP=36.57

SDCB TYPE II, 48"ø CONCRETE
RIM=42.67
IE=33.89, 12"ø PVC W
IE=33.93, 12"ø PVC E
SUMP=32.02

SDMH TYPE II, 48"ø CONCRETE
RIM=47.88
IE=38.43, 12"ø PVC W
IE=38.43, 16"ø PVC E
IE=40.15, 8"ø PVC S
SUMP=36.98

SDCB TYPE II, 48"ø CONCRETE
RIM=43.85
IE=32.27, 12"ø PVC E
IE=32.25, 12"ø PVC W
SUMP=30.35

SDMH TYPE II, 48"ø CONCRETE
RIM=46.92
IE=35.36, 16"ø PVC W
IE=35.37, 16"ø PVC E
IE=35.29, 16"ø PVC N
SUMP=33.92

SDMH TYPE II, 48"ø CONCRETE
RIM=45.57
IE=40.48, 8"ø PVC S
IE=39.99, 12"ø PVC W
IE=39.91, 12"ø D.I. N
IE=39.77, 12"ø PVC E
SUMP=38.47

1	14.9'
2	A-8
3	A-9
4	DP-17
5	DP-10
6	DP-7
7	DP-9
8	DP-8
9	DP-06
10	DP-01
11	10" HOLLY
12	10" HOLLY
13	19" HORSE CHESTNUT
14	20 23" APPLE
15	29" CHERRY
16	10" APPLE
17	6" APPLE
18	7" APPLE
19	15" CYPRESS
20	6" JAPANESE MAPLE
21	10" APPLE
22	9" DOGWOOD
23	10" APPLE
24	16" HOLLY
25	34" PINE
26	33" RED CEDAR
27	CONCRETE
28	ECO BLOCK
29	23" FIR
30	28" RED CEDAR
31	26" RED CEDAR
32	15" FIR
33	30" SPRUCE
34	44" RED CEDAR
35	27" RED CEDAR
36	26" PINE
37	21" PINE
38	81" GIANT SEQUOIA
39	26" RED CEDAR
40	16" RED CEDAR
41	50" MAPLE
42	19" PINE
43	30" RED CEDAR
44	29" RED CEDAR

REVISIONS

NO.	DESCRIPTION/DATE	BY
0	ORIGINAL SURVEY FEBRUARY 2023	ZL

CYNTHIA A. FLOOD — STATE OF WASHINGTON — 29281 — REGISTERED PROFESSIONAL LAND SURVEYOR

CONSULTING ENGINEERS LLC
33400 8th Ave S, Suite 205
Federal Way, WA 98003
(253) 838-6113
(425) 297-9900
FEDERAL WAY
LYNNWOOD
www.esmcivil.com
Civil Engineering
Public Works
Land Planning
Landscape Architecture
Land Surveying
Project Management

TRAMMELL CROW COMPANY

PUYALLUP TRAINING CENTER

CITY OF PUYALLUP WASHINGTON

SITE PLAN

JOB NO.:	2110-002-022
DWG. NAME:	SITE-03
DESIGNED BY:	
DRAWN BY:	C.A.F./R.F.G.
CHECKED BY:	C.A.F.
DATE:	2024-01-19
DATE OF PRINT:	

SITE-03

3 OF 4 SHEETS

File: \\esmfs\ENGR\ESM-JOBS\2110\002\022\Survey Plats\SITE-03.dwg
Plotted: 1/19/2024 7:53 AM
Plotted By: Roxane Gotch

PRCNC20240216

A PORTION OF THE NE 1/4 OF THE NE 1/4 OF SECTION 21, T. 20 N., R. 4 E., W.M.

City of Puyallup
Development & Permitting Services
ISSUED PERMIT

Building	Planning
Engineering	Public Works
Fire	Traffic

n

SCALE : 1" = 20'

20' 10' 0 20' 40'

SEE LEGEND ON SHEET 2

MATCH LINE – SEE SHEET 2

MATCH LINE – SEE SHEET 3

EXCEPTION 16 ALLOWS FOR COMMUNICATION FACILITIES

APPROXIMATE LOCATION OF COMMUNICATION LINE REFERENCED IN EXCEPTION 16

APPROXIMATE LOCATION OF 20' COMMUNICATION EASEMENT RECORDING NO. 201310140202

6' CHAIN LINK FENCE WITH BARBED WIRE

CHICAGO, MILWAUKEE & ST. PAUL RAILROAD RIGHT OF WAY

LEVEL 3 LUMAN (CENTURY LINK)

EDGE OF GRAVEL (TYPICAL)

21" HICKORY

44" MAPLE

30" MAPLE

UTILITY LOCATING PAINT ENDED HERE, BUT THE LINE IS BELIEVED TO CONTINUE SOUTHEASTERLY RELATIVE TO THE RAILROAD TRACK

RAILROAD TRACKS

CENTERLINE OF RAILROAD RIGHT OF WAY

3' WIRE FENCE

N 66°35'01" W 1167.91' (ESM)
1167.89' (RB)

CITY OF EDGEWOOD

CITY OF PUYALLUP

FOUND 5/8" REBAR AND CAP STAMPED: "PNLS 19628 / 35476" (DECEMBER 2022) S 0.3° E 0.0'

FENCE IS NE 4.7'

FOUND 5/8" REBAR AND CAP STAMPED: "PNLS 19628 / 35476" (DECEMBER 2022) S 0.2° E 0.0'

FENCE IS N 2.3'

N 0°02'13" E 28.13' (ESM)
28.14' (RB)

57' (ESM)/(R/D)

SURVEYED PROPERTY
6.171 ACRES
(268,785 S.F.)
NO EXISTING BUILDINGS ON THE SURVEYED PROPERTY

TODD ROAD N.W.
(AKA 23RD AVENUE N.W., 50TH STREET E.)
(PUBLIC RIGHT-OF-WAY)

N 88°44'59" W 1081.98' (ESM)
1081.96'(RB)

EXISTING ACCESS POINT

SITE SPECIFIC BASIS OF BEARINGS:
MONUMENTED CENTERLINE = N 88°44'59" W 2044.39' (ESM)

SDCB, RIM=41.00
IE=38.51, 12"ø RCP W
IE=38.40, 12"ø RCP E
SUMP=36.75

SDCB, RIM=41.49
IE=38.59, 12"ø RCP E
IE=38.49, 12"ø RCP W
SUMP=36.84

SDCB, RIM=41.96
IE=37.58, 12"ø PVC W
IE=37.56, 12"ø PVC E
SUMP=36.06

SDCB, RIM=42.55
IE=39.30, 12"ø RCP E
IE=39.25, 12"ø RCP W
SUMP=37.75

SDCB, RIM=43.13
IE=38.98, 12"ø PVC W
IE=38.98, 12"ø PVC E
SUMP=37.53

SDCB, RIM=44.51
IE=40.27, 12"ø PVC W
IE=40.26, 12"ø PVC S
SUMP=38.81

SDCB TYPE II, 48"ø CONCRETE
RIM=40.57
IE=31.37, 12"ø PVC S
IE=31.35, 12"ø PVC E
IE=31.32, 12"ø PVC W

SIGN "NO TRUCK PARKING <-->"
N 0.7'

SIGN "NO TRUCK PARKING <-->"
N 1.4'

SIGN "NO TRUCK PARKING <-->"
S 0.2'

SIGN "NO TRUCK PARKING <-->"

SIGN "NO TRUCK PARKING <-->"
"STOP SIGN AHEAD"

PROPOSED 3' RIGHT OF WAY DEDICATION

20' COMMUNICATION EASEMENT RECORDING NO. 201310140202

3' WIDE TRENCH LEVEL 3 MCI & ZAYO

2" WIDE TRENCH MCI & ZAYO

LEVEL 3 LUMAN (CENTURY LINK)

NORTHERLY EDGE OF GRAVEL

POWER VAULT

GATE

GUARD RAIL

DITCH

CULVERT

FOUND 5/8" REBAR AND CAP STAMPED "APEX 18902", DOWN 0.1 FEET S 0.1' E 0.2' (DECEMBER 2022)

PAVED ROAD 35'

PAVED ROAD 38'

PAVED ROAD 41'

30'

120.11' (ESM)
120.00' (R8)

30.00' (ESM)
30.00' (R8)

REVISIONS

NO.	DESCRIPTION/DATE	BY
0	ORIGINAL SURVEY FEBRUARY 2023	ZL

CYNTHIA A. FLOOD
STATE OF WASHINGTON
29281
REGISTERED PROFESSIONAL LAND SURVEYOR

ESM CONSULTING ENGINEERS, LLC
33400 8th Ave S, Suite 205
Federal Way, WA 98003
FEDERAL WAY (253) 838-6113
LYNNWOOD (425) 297-9900
www.esmcivil.com
Civil Engineering | Land Surveying | Land Planning | Landscape Architecture | Public Works | Project Management

TRAMMELL CROW COMPANY

PUYALLUP TRAINING CENTER

SITE PLAN

CITY OF PUYALLUP WASHINGTON

JOB NO.:	2110-002-022
DWG. NAME:	SITE-04
DESIGNED BY:	
DRAWN BY:	C.A.F./R.F.G.
CHECKED BY:	C.A.F.
DATE:	2024-01-19
DATE OF PRINT:	

SITE-04

4 OF 4 SHEETS

File: \\esmfs\ENGR\ESM-JOBS\2110\002\022\Survey Plots\SITE-04.dwg
Plotted: 1/19/2024 7:58 AM
Plotted By: Roberto Garcia