GENERAL NOTES

1. REFERENCE TO RELATED WORK: "REF" INDICATIONS DENOTE WORK COVERED ELSEWHERE (ARCHITECTURAL, STRUCTURAL, CIVIL, ELECTRICAL, LANDSCAPE, OR KITCHEN), OR ITEM BASED ON A SPECIFIC MANUFACTURER'S DIMENSIONS (VERIFY).

2. ELECTRICAL CHARACTERISTICS: REFER TO ELECTRICAL DRAWINGS FOR ELECTRICAL CHARACTERISTICS (VOLTAGES, ETC. OF MECHANICAL EQUIPMENT, UNLESS OTHERWISE INDICATED.

3. CODES: COMPLETE INSTALLATION OF THE PLUMBING SYSTEM SHALL BE PER THE APPLICABLE BUILDING, MECHANICAL, ENERGY, PLUMBING, FIRE, AND HEALTH CODES AND REGULATIONS AS ADOPTED BY THE LOCAL AHJ.

4. PREPARE AND SUBMIT FOR REVIEW A SHOP DRAWING BASED ON FINAL STRUCTURAL SHOP DRAWINGS FOR LOCATING AND ROUTING ALL EQUIPMENT, PIPING, ETC.
   A. COORDINATE FLOOR AND BEAM PENETRATIONS WITH STRUCTURAL.
   B. COORDINATE FINAL LOCATION AND ROUTING WITH CEILING, LIGHTS, WALLS, FIRE SPRINKLER PIPING, AND OTHER TRADES WORK.
   C. INCLUDE ADDITIONAL OFFSETS, ELBOWS, ROUTING, EQUIVALENT DUCT SIZING EXCHANGE, RELOCATING, ETC. AS REQUIRED FOR A COMPLETE OPERATING MECHANICAL SYSTEM.
   D. PROVIDE SHOP DRAWINGS AT NO ADDITIONAL COST TO THE OWNER.

5. PLUMBING CONTRACTOR SHALL LOCATE AND COORDINATE EXACT LOCATION OF ALL PLUMBING EQUIPMENT WITHIN THE STRUCTURE.

6. ACCESS DOORS: COORDINATE WITH ARCHITECT AND LOCATE ALL ACCESS DOORS ON SHOP DRAWINGS PRIOR TO BEGINNING OF CONSTRUCTION. ACCESS DOORS IN FIRE RATED STRUCTURE SHALL BE FIRE RATED. VERIFY ACCESS DOOR LOCATIONS WITH GENERAL CONTRACTOR PRIOR TO BIDDING.

7. ROOF PENETRATIONS: SEE ARCHITECTURAL DRAWINGS FOR ROOF CAP, ROOF CURB, ROOF DRAIN, OVERFLOW DRAINS AND VTR DETAILS.

8. EXPOSED PIPING: PROVIDE CHROME PLATING FOR EXPOSED PIPING IN FINISHED ROOMS.

9. PENETRATIONS: PROVIDE ESCUTCHEON PLATES FOR EXPOSED PIPING PENETRATIONS AND SHEET METAL FLASHING FOR EXPOSED DUCTWORK PENETRATIONS.

10. SHAFT AND PLENUM CONNECTIONS: SEAL CONNECTIONS TO AIR SHAFTS AIRTIGHT. PROVIDE AIRTIGHT SEAL AROUND PENETRATIONS IN AIR PLENUMS.

11. LIGHT FIXTURE CLEARANCE: COORDINATE LOCATIONS OF MECHANICAL WORK TO PROVIDE CLEARANCES OVER LIGHTING FIXTURES FOR REMOVAL AND REPLACEMENT.

12. CABLE TRAYS: PIPING INSTALLED ADJACENT TO ELECTRICAL CABLE TRAYS SHALL ALLOW MINIMUM ACCESS OF 6" ABOVE AND TO THE SIDE OF CABLE TRAYS.

13. MOTORS: COMPLY WITH ENERGY CODE ENFORCED BY AHJ FOR MINIMUM EFFICIENCIES UNDER FULL LOAD.

14. ACCESS CLEARANCES FOR MAINTENANCE AND REPLACEMENT: VERIFY PHYSICAL DIMENSIONS OF EQUIPMENT TO ENSURE THAT ACCESS CLEARANCES CAN BE MET. COORDINATE LOCATIONS OF MECHANICAL WORK AND WORK OF OTHER TRADES TO PROVIDE ACCESS CLEARANCES FOR SERVICE AND MAINTENANCE.

COORDINATION REQUIREMENTS

1. IRRIGATION SYSTEM: COORDINATE IRRIGATION WATER DEMAND, MINIMUM WATER PRESSURE REQUIREMENTS & CONTROL CABINET LOCATIONS WITH IRRIGATION CONTRACTOR.

2. GAS: CONTRACTOR/GAS COMPANY SHALL FINALIZE GAS METER AND GAS SERVICE LOCATIONS. INSTALL SEISMIC GAS SHUT OFF VALVE PER GAS COMPANY REGULATIONS.

3. UTILITIES: COORDINATE WITH SITE UTILITY CONTRACTOR AND CIVIL DRAWINGS FOR UTILITY CONNECTIONS AND EXTENSIONS.

4. ROOF DRAINAGE: COORDINATE WITH GENERAL CONTRACTOR FOR ROOF DRAIN AND OVERFLOWS, SCUPPER DRAINS, AND CONDENSATE DRAINS.

5. PLUMBING FIXTURES & EQUIPMENT: COORDINATE EXACT LOCATION OF ALL PLUMBING FIXTURES & EQUIPMENT WITH ARCHITECTURAL AND OTHER TRADES DOCUMENTS.

6. PIPING: COORDINATE EXACT LOCATION OF ALL STRUCTURAL FRAMING & FOOTINGS AND FINALIZE THE EXACT ROUTING OF ALL PIPES WITH STRUCTURAL ENGINEER AT THE SITE PRIOR TO AND DURING THE CONSTRUCTION. COORDINATE UNDER GRADE PIPING & FOUNDATION DRAINAGE PIPING WITH CIVIL ENGINEER.

7. ADJUSTMENTS: ALL EQUIPMENT, MOTORS, FANS GAS BURNERS, IGNITION DEVICES, DRIVES, ETC. SHALL BE ADJUSTED AND BALANCED TO OPERATE AT SPECIFIED RATINGS AS REQUIRED FOR THIS PROJECT SITE AND ACCOUNTING FOR ELEVATION ABOVE SEA LEVEL.

8. APPROVALS: MECHANICAL AND PLUMBING EQUIPMENT SHALL BE APPROVED FOR INSTALLATION IN THE PROJECT LOCATION AND SHALL HAVE ALL CERTIFICATIONS AND RATINGS TO MEET ALL ENERGY, POLLUTION, ENVIRONMENTAL, SEISMIC, APPLICABLE CODES AND REGULATIONS. THE CONTRACTOR SHALL COORDINATE WITH MANUFACTURE SUPPLIERS AND SHALL INCLUDE ALL COSTS REQUIRED TO MEET THE BID DOCUMENTS.

9. FIRE PROTECTION: CONTRACTOR SHALL PROVIDE A FULLY DESIGNED FIRE PROTECTION SPRINKLER SYSTEM IN COMPLIANCE WITH NFPA AND LOCAL CODES. PROVIDE DESIGN, PERMITS, MATERIALS, INSTALLATION, TESTING AND ALL OTHER FOR A FULLY OPERATIONAL SYSTEM. LOCATION OF ALL PIPING TO BE COORDINATED WITH OTHER TRADES.

10. PRIOR TO PIPING INSTALLATION: PLUMBING CONTRACTOR TO COORDINATE PIPING LAYOUT WITH ALL OTHER TRADES.

11. ACCESS: COORDINATE ALL ACCESS LOCATIONS WITH GENERAL CONTRACTOR AND ARCHITECT TO ENSURE ALL REQUIRED ACCESS HATCHES, ACCESS PANELS & ACCESS COVERS ARE PROVIDED.

12. PROVIDE WATER TIGHT SEALS FOR ANY PIPING PENETRATING THE EXTERIOR FOUNDATION WALLS OR SLABS.

13. ANY DISCREPANCIES SHOULD BE REPORTED TO THE ARCHITECT IMMEDIATELY.

14. PROVIDE FIRE PROOFING FOR ALL PIPING PENETRATING FIRE BARRIER WALLS OR FLOOR SLABS.

PLUMBING NOTES

1. CONNECTIONS: PROVIDE PLUMBING FIXTURE CONNECTIONS TO BUILDING WASTE, VENT, COLD WATER, AND HOT WATER SYSTEM IN ACCORDANCE WITH DRAWINGS, MANUFACTURER'S RECOMMENDATIONS, AND LOCAL CODES. CONNECT TO EACH FIXTURE, EQUIPMENT, ETC. WITH ALL ACCESSORIES, VALVES, VACUUM BREAKERS, REGULATORS, UNIONS, ETC. AS REQUIRED AND AS RECOMMENDED BY THE MANUFACTURERS. REFER TO PLUMBING FIXTURE CONNECTION SCHEDULE ON PLANS.

2. HOT AND COLD: WATER PIPING CONNECTION TO EACH FIXTURE SHALL BE COLD WATER ON THE RIGHT HAND SIDE AND HOT WATER ON THE LEFT HAND SIDE.

3. HOT WATER: NON-CIRCULATING HOT WATER PIPE SHALL NOT EXCEED 10' UNLESS OTHERWISE SHOWN ON DRAWINGS.

4. VENT STACKS: COORDINATE VENT STACK WITH HVAC EQUIPMENT TO MAINTAIN MINIMUM 10' CLEARANCE FROM OUTSIDE AIR INTAKES.

5. CLEANOUTS: PROVIDE CLEANOUTS PER CURRENT UPC AND AS REQUIRED BY LOCAL JURISDICTIONS. CLEANOUTS SHALL BE LOCATED IN WALLS/FLOORS WHERE THEY ARE NOT HIGHLY VISIBLE. FLOOR CLEANOUTS IN CARPETED AREAS TO BE FITTED WITH CARPET INSERTS. LOCATIONS SHALL BE SUBMITTED TO ARCHITECT FOR APPROVAL. NOTE: NOT ALL CLEANOUTS ARE SHOWN ON THE PLUMBING DRAWINGS.

6. SUDS RELIEF: PROVIDE SUDS RELIEF IN ACCORDANCE WITH 2021 UPC SECTION 711.0, STATE AND LOCAL CODES.

7. SHUT-OFFS: PROVIDE 1/4 TURN BALL VALVE ANGLE STOP SHUT-OFF VALVES AND BRAIDED STAINLESS STEEL FLEX CONNECTORS AT HOT AND COLD WATER SUPPLY TO EACH FIXTURE. EXCEPTION: PROVIDE SCREWDRIVER STOPS AT BATH/SHOWERS.

8. TUB SPOUTS SHALL BE THREADED (NO PUSH-ON FITTINGS).

9. TRAP ARMS: PROVIDE TRAP ARMS SUCH THAT THE MAXIMUM LENGTH WILL NOT EXCEED CODE REQUIREMENTS.

10. ADA INSULATION: AT PLUMBING PIPING EXPOSED UNDER LAVATORIES, INSULATE THE EXPOSED PIPING AND TRAPS WITH PRODUCT SPECIFICALLY DESIGNED FOR THIS APPLICATION MEETING ADA REQUIREMENTS. PROVIDE HANDI-LAV GUARD OR EQUIVALENT. OFFSET P-TRAPS TO CLEAR WHEELCHAIR ACCESS.

11. GAS EQUIPMENT: GAS EQUIPMENT SHALL BE INSTALLED PER EQUIPMENT LISTINGS, APPLICABLE IFGC, UPC, LOCAL CODES & NFPA STANDARDS.

12. GAS CONNECTIONS: INSTALL FLEXIBLE QUICK DISCONNECT ASSEMBLIES FOR ALL GAS FIRED KITCHEN EQUIPMENT PER APPLICABLE IFGC, UPC, LOCAL CODES & NFPA STANDARDS. PROVIDE LOCKABLE GAS SHUT-OFF VALVES FOR FIREPLACES & BBQS IN UNATTENDED PUBLIC LOCATIONS IN THE BUILDING.

13. GAS PIPING CONNECTIONS TO WATER HEATERS, BOILERS AND FURNACES SHALL HAVE DIRT LEGS AND UNIONS PROVIDED ON APPLIANCE SIDE OF SHUTOFF VALVE.

14. GAS PIPING INSTALLATION: STEEL OR MALLEABLE IRON FUEL LINES 2" OR SMALLER SHALL BE ASSEMBLED USING THREAD SEALANT SUITABLE FOR NATURAL GAS. GAS PIPING LARGER THAN 2" SHALL HAVE WELDED FITTINGS.

15. GAS PIPING UNDERGROUND: WHERE INSTALLED BELOW GRADE THROUGH THE OUTER FOUNDATION OR BASEMENT WALL OF A BUILDING, SHALL BE ENCASED IN A PROTECTIVE PIPE SLEEVE. THE ANNULAR SPACE BETWEEN THE GAS PIPING AND THE SLEEVE SHALL BE SEALED.

16. GAS PIPING ABOVE GROUND: WHERE PASSING THROUGH AN OUTSIDE WALL, GAS PIPING SHALL BE PROTECTED AGAINST CORROSION BY COATING OR WRAPPING WITH AN INERT MATERIAL. WHERE PIPING IS ENCASED IN A PROTECTIVE PIPE SLEEVE, THE ANNULAR SPACE BETWEEN THE PIPING AND THE SLEEVE SHALL BE SEALED.

17. GAS PIPE SUPPORT: FUEL LINES SHALL BE SUPPORTED OR STRAPPED, AND SHALL BE PLUMB AND SQUARE.

18. GAS PIPING ON ROOFTOPS SHALL BE SUPPORTED AND ANCHORED TO THE ROOF.

19. GAS PIPING SHALL NOT BE BURIED UNDER A BUILDING, SLAB OR OTHER STRUCTURE.

20. GAS PIPING PROTECTIVE COATING: PAINT ALL EXTERIOR EXPOSED GAS PIPING WITH TWO COATS OF RUST INHIBITIVE PAINT. COLOR: GRAY.

21. WATER HAMMER ARRESTORS: PROVIDE AT THE END OF HOT AND COLD WATER LINES SERVING TWO OR MORE FIXTURES; SIZE IN ACCORDANCE WITH PLUMBING AND DRAINAGE INSTITUTE (PDI) REQUIREMENTS. WATER HAMMER ARRESTORS ARE REQUIRED FOR QUICK CLOSING VALVES, SUCH AS LAUNDRY WASHERS, FLUSH VALVES (PUBLIC TOILETS), ETC.

22. TRAP PRIMERS AS SPECIFIED: PROVIDE TRAP PRIMERS AND PIPING FOR FLOOR DRAINS, FLOOR SINKS, AREA DRAINS & HUB DRAINS. ARRANGE PIPING TO ACHIEVE EQUAL FLOW TO EACH DRAIN AND FLOOR SINK FOR TRAP PRIMERS SERVING MULTIPLE DRAINS AND FLOOR SINKS. COORDINATE EXACT LOCATIONS WITH ARCHITECT & ELECTRICAL ENGINEER.

23. P-TRAPS: ALL EXPOSED P-TRAPS SHALL BE CHROME-PLATED BRASS. P-TRAPS SERVING HANDICAPPED COUNTER TOP LAVATORIES SHALL BE INSULATED.

24. THROUGHOUT THE PROJECT PROVIDE BALL VALVES. GATE VALVES SHALL NOT BE USED. NO EXCEPTIONS.

25. HOT WATER RECIRCULATING BALANCING VALVES SHOULD BE BELL & GOSSETT CIRCUIT SETTER (WATTS OR EQUAL) WITH INTEGRAL READOUT PORTS, ADJUSTMENT KNOB, DRAIN CONNECTION, AND POSITIVE SHUTOFF.

26. DISASSEMBLY PROVISIONS: PROVIDE UNIONS OR FLANGES AT PIPING CONNECTIONS TO EQUIPMENT, COILS, TRAPS, CONTROL VALVES, AND OTHER COMPONENTS TO ALLOW DISASSEMBLY FOR MAINTENANCE.

27. REDUCERS: PROVIDE AS REQUIRED FROM LINE PIPE SIZE TO EQUIPMENT, TRAP, COIL, AND CONTROL VALVE CONNECTION SIZES.

28. VALVE TAGS: PROVIDE VALVE TAGS PER SPECIFICATIONS TO IDENTIFY VALVE AND THE AREA IT SERVES.

29. OFFSETS: PROVIDE FOR BRANCH LINES TO EQUIPMENT.

30. ALL TEMPERATURE MIXING VALVES SHALL COMPLY WITH ASSE-1070 SAFETY STANDARDS.

31. PROVIDE PIPE MARKER WITH DIRECTION OF FLOW. LABEL "NON-POTABLE WATER DO NOT DRINK" CLEARLY ON NON-POTABLE WATER PIPING.

32. PROVIDE EXPANSION LOOPS/EXPANSION JOINTS IN PIPING PER 2021 UPC TABLE 313.3 AND MANUFACTURER INSTALLATION INSTRUCTIONS.

33. PROVIDE APPROVED PIPE HANGERS & PIPE SUPPORTS IN ACCORDANCE WITH MANUFACTURER'S INSTALLATION INSTRUCTIONS AND 2021 UPC TABLES 313.3 & 313.6. SUBMIT FOR APPROVAL.

34. DIELECTRIC UNIONS: PROVIDE AT CONNECTIONS OF DISSIMILAR PIPE.

35. REFRIGERANT PIPING: PROVIDE SIZING & INSTALLATION IN STRICT ACCORDANCE WITH MANUFACTURER'S INSTRUCTIONS.

36. CONDENSATE DRAIN: PROVIDE A P-TRAP FOR EACH HVAC UNIT CONDENSATE PAN WITH PLUG TEES FOR CLEANING. CONDENSATE DRAINS SHALL BE DISCHARGED TO AN INDIRECT WASTE OR OUTSIDE.

37. PIPING & EQUIPMENT SUPPORTS/HANGERS & SEISMIC RESTRAINTS TO BE DESIGNED BY DESIGN BUILT CONTRACTOR.

38. IF NEEDED, PROVIDE VACUUM BREAKERS AT ALL HOSE BIBBS.

39. FLOOR DRAINS OR SIMILAR TRAPS DIRECTLY CONNECTED TO THE DRAINAGE AND SUBJECT TO INFREQUENT USE SHALL BE PROVIDED WITH AN APPROVED AUTOMATIC MEANS OF MAINTAINING THEIR WATER SEALS IN ACCORDANCE WITH 2021 UPC 1007.0.

40. INSULATION MATERIAL SHALL MEET CITY OF PUYALLUP QUALITY STANDARDS.

41. ALL PIPING AND DUCTWORK SHALL BE INSULATED CONSISTENT WITH THE 2021 WASHINGTON STATE ENERGY CODE.

42. BUILDING DRAIN AND VENT PIPING MATERIALS SHALL COMPLY WITH 2021 UPC 701.0 AND 903.0.

43. ALL SANITARY SYSTEM MATERIAL SHALL BE LISTED BY AN APPROVED LISTING AGENCY.

44. ALL STORAGE WATER HEATING EQUIPMENT SHALL BE PROVIDED WITH AN APPROVED, LISTED EXPANSION TANK OR OTHER DEVICE DESIGNED FOR INTERMITTENT OPERATION FOR THERMAL EXPANSION CONTROL PER 2021 UPC 608.3.

45. WATER HEATERS SHALL BE ANCHORED OR STRAPPED TO RESIST HORIZONTAL DISPLACEMENTS DUE TO SEISMIC MOTION PER 2021 UPC 507.2.

46. MATERIAL EXPOSED WITHIN A DUCT OR PLENUM SHALL COMPLY WITH 2021 IMC 602.2.1.

47. HVAC EQUIPMENT AND WATER HEATERS SHALL COMPLY WITH 2021 IMC CHAPTER 3.

48. BOILERS SHALL COMPLY WITH ALL THE REQUIREMENTS OF 2021 IMC CHAPTER 10.

49. PROVIDE EXPANSION TANKS FOR BOILERS PER 2021 IMC SECTION 1009.0.

50. SHOWERS AND TUB/SHOWER COMBINATIONS SHALL BE PROVIDED WITH MIXING VALVES PER 2021 UPC 408.0.

51. PLUMBING FIXTURES AND FITTINGS SHALL COMPLY WITH CITY OF PUYALLUP WATER CONSERVATION STANDARDS.

52. CONTRACTOR SHALL PROVIDE FIRESTOPPING AT PENETRATIONS AS NECESSARY TO RETAIN THE FIRE RATING OF ALL ASSEMBLIES. ALL WORK SHALL BE IN COMPLIANCE WITH CODE REQUIREMENTS FOR THE BUILDING CONSTRUCTION TYPE.

53. ALL GARAGE DRAINS, TRASH ROOMS DRAINS & GARAGE TRENCH DRAINS SHALL BE TAKEN TO SAND/OIL INTERCEPTOR(S) BEFORE CONNECTING TO THE SANITARY SEWER SYSTEM.

54. PLUMBING CONTRACTOR SHALL PROVIDE REDUCED PRESSURE BACKFLOW PREVENTERS OR OTHER APPROVED BACKFLOW PREVENTION DEVICE WHERE REQUIRED BY HEALTH AUTHORITIES, FOOD SERVICE DRAWINGS, APPLIANCE MANUFACTURER INSTRUCTIONS AND BY CODE.

55. PROVIDE REQUIRED & PROPER BACK FLOW PREVENTERS AS SPECIFIED FOR THE APPLIANCES INCLUDING, BUT NOT LIMITED TO THE FOLLOWING:
    55.A. ICE MACHINES AND ICE MAKERS
    55.B. CARBONATED BEVERAGE DISPENSING SYSTEMS
    55.C. COFFEE BREWERS
    55.D. ESPRESSO MACHINES
    55.E. WATER FILTERS
    55.F. STEAM OR HOT WATER BOILERS
    55.G. IRRIGATION SYSTEM
    55.H. FIRE PROTECTION SYSTEM
    55.I. CHEMICAL TREATMENT SYSTEM
    55.J. SOAP/CHEMICAL DISPENSER SYSTEM
    55.K. COMMERCIAL WASHER

AREA OF WORK

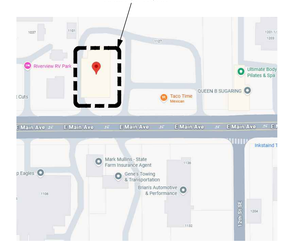

VICINITY PLAN

N

PROPERTY ADDRESS
1127 E MAIN ST
PUYALLUP, WA 98372

ASSESSORS PARCEL NUMBER
0420271174

APPLICABLE CODES
2021 INTERNATIONAL BUILDING CODE (IBC)
2021 INTERNATIONAL MECHANICAL CODE (IMC)
2021 UNIFORM PLUMBING CODE (UPC)
2023 NATIONAL ELECTRIC CODE (NEC)
2021 WASHINGTON STATE ENERGY CODE (QSEC)

SCOPE OF WORK
PLUMBING WORK TO SUPPORT TENANT IMPROVEMENT OF EXISTING TACO TIME RESTAURANT TO BE USED FOR DRIVE-THRU COFFEE SHOP. WORK TO INCLUDE SUPPLY AND WASTE & VENT PIPING FOR PLUMBING FIXTURES. HOT WATER TO BE PROVIDED BY ELECTRIC TANK TYPE WATER HEATER.

Sheet List Table	
SHEET NUMBER	SHEET TITLE
P000	GENERAL NOTES, PROJECT INFORMATION & DRAWING INDEX
P001	PLUMBING CALCULATIONS. SCHEDULES & TABLES
P200	UNDERSLAB WASTE & VENT PLAN
P201	WASTE & VENT FLOOR PLAN
P301	SUPPLY PLAN
P400	WASTE & VENT DIAGRAM
P500	SUPPLY DIAGRAM
P501	SUPPLY DIAGRAM
P600	DETAILS

City of Puyallup
Development & Permitting Services
ISSUED PERMIT
Building | Planning
Engineering | Public Works
Fire | Traffic

City of Puyallup
Building
REVIEWED FOR COMPLIANCE
BSnowden
06/01/2026
2:31:18 PM

The approved construction plans, documents, and all engineering must be posted on the job at all inspections in a visible and readily accessible location.

Full sized legible color plans are required to be provided by the permitee on site for inspection.

Approval of submitted plans is not an approval of omissions or oversights by this office or non compliance with any applicable regulations of local government. The contractor is responsible for making sure that the building complies with all applicable codes and regulations of the local government.

NO.	DATE	DESCRIPTION
1	06/17/2026	PERMIT RESUBMITTAL #1
	04/29/2026	PERMIT SET

REVISIONS

REED JACKSON
STATE OF WASHINGTON
REGISTERED PROFESSIONAL ENGINEER
04-29-26

ROBISON ENGINEERING, INC
19401 40TH AVE W., SUITE 302
LYNNWOOD, WA 98036
206.364.3343 TEL
REI PROJECT: #1459 -003
CONTACT: LUKE AHLQUIST

DRAWN: LA
DESIGNED: LA
CHECKED: LA
APPROVED: RJ, JR

PROJECT: WOODS COFFEE - PUYALLUP
1115 E. MAIN STREET
PUYALLUP, WA 98372

ROBISON ENGINEERING, INC
19401 40TH AVE W. SUITE 302
LYNNWOOD, WA 98036
PHONE:(206)364-3343
CONTACT: ALEX LEITCH

DATE:
06/17/2026

SHEET TITLE:
GENERAL NOTES, PROJECT INFORMATION & DRAWING INDEX

PRCTI20260728

SHEET NO.
P000

PLUMBING FIXTURE SCHEDULE

FIXTURE TAG	DESCRIPTION	MANUFACTURER	MFG ITEM #	PLUMBING					DIRECT/INDIRECT	GREASE/ SANITARY	NOTES
				CW	FW	HW	W	V			
E4.01	BATCH BREWER	FETCO	E2252US-UB250-MA110 CBS-2252 NG	-	1/2"	-	-	-	-	-	PROVIDE RPBA
E4.04	DISHWASHER	INSINGER	CADET	-	-	3/4"	-	-	INDIRECT TO FS	GREASE	PROVIDE RPBA
E4.07	ESPRESSO MACHINE	EVERSYS	E'4M/ST	-	1/2"	-	-	-	INDIRECT TO FS	GREASE	PROVIDE RPBA
E4.08	WASHER	SPEED QUEEN	SF7	3/4"	-	3/4"	2"	2"	DIRECT	SANITARY	-
E4.09	WATER BOILER	MARCO	UC10	-	1/2"	-	-	-	-	-	-
E4.40	DROP IN ICE BIN	KROWNE	D278	-	-	-	1"	-	INDIRECT TO FS	SANITARY	
E4.41	ICE BIN	ICE-O-MATIC	B-110	-	-	-	1"	-	INDIRECT TO FS	SANITARY	
E4.42	ICE MACHINE	ICE-O-MATIC	CIM 1447R	-	1/2"	-	-	-	INDIRECT TO FS	SANITARY	PROVIDE RPBA
P7.30	LAVATORY FAUCET	T&S BRASS	5EF-1D-DS-4DP	1/2"	-	1/2"	-	-	-	-	PROVIDE ASSE 1070 VALVE TMV-1
P7.31	CHEMICAL DISPENSER	N/A	N/A	-	-	-	-	-	-	-	WATER SUPPLY FROM P7.38 & P7.39
P7.32	GLASS FILLER	T&S BRASS	B-1210								
P7.33	DUMP SINK FAUCET	T&S BRASS	B-1141-04	1/2"	-	1/2"	-	-	-	-	-
P7.34	MOP SINK FAUCET	T&S BRASS	B-0665-BSTR	1/2"	-	1/2"	-	-	-	-	-
P7.35	HAND SINK FAUCET	T&S BRASS	B-1111-WH4	1/2"	-	1/2"	-	-	-	-	-
P7.36	PRE-RINSE FAUCET	T&S BRASS	B-0133-ADF10-B	1/2"	-	1/2"	-	-	-	-	-
P7.37	DIPPER WELL FAUCET & WELL	T&S BRASS	B-2282-01-F05	1/2"	-	-	-	-	INDIRECT TO FS	SANITARY	-
P7.38	SILL FAUCET	BRASSCRAFT	KTR17X-C	1/2"	-	-	-	-	-	-	-
P7.39	SILL FAUCET	BRASSCRAFT	KTR17X-C	-	-	1/2"	-	-	-	-	TEMPERED HOT WATER
P7.42	GLASS RINSER	FOXX EQUIPMENT	12K09-110	1/2"	-	-	-	-	-	-	-
P7.50	LAVATORY BASIN	KOHLER	K-2005-0	-	-	-	1-1/2"	1-1/2"	DIRECT	SANITARY	-
P7.51	DROP IN HAND SINK	EAGLE GROUP	FNWNF-12-14-8-1	-	-	-	1-1/2"	1-1/2"	DIRECT	SANITARY	-
P7.52	MOP SINK BASIN	ZURN	Z1996-24-BV	-	-	-	3"	2"	DIRECT	GREASE	-
P7.53	3-COMP SINK	ADVANCE TABCO	FC-3-1515-15RL	-	-	-	-	-	INDIRECT TO FS	GREASE	-
P7.54	WALL MOUNT HAND SINK	REGENCY	600HS12SP	-	-	-	1-1/2"	1-1/2"	DIRECT	GREASE	-
P7.55	DUMP SINK BASIN	EAGLE GROUP	FNWNF-14-16-8-1	-	-	-	-	-	INDIRECT TO FS	GRASE	-
P7.58	EYE WASH SINK	GUARDIAN	G1814P	1/2"	-	1/2"	2"	1-1/2"	DIRECT	SANITARY	PROVIDE ASSE 1071 VALVE P7.58.1
P7.58.1	THERMOSTATIC MIXING VALVE	GUARDIAN	G6020	1/2"	-	1/2"	-	-	-	-	-
P7.60	WATER CLOSET	KOHLER	K-3519			-			DIRECT	SANITARY	PROVIDE WITH K-4650 SEAT
P7.70	FILTER SYSTEM	3M	5624504	3/4"	3/4"	-	-	-	-	-	-
TMV-1	THERMOSTATIC MIXING VALVE	WATTS	LFG480	1/2"	-	1/2"	-	-	-	-	-
FS-1	FLOOR SINK	WATTS	FS-740	-	-	-	-	-	-	-	-
RPBA-1	REDUCED PRESSURE BACKFLOW ASSEMBLY	WATTS	LF009	PER DWGS.		-	-	-	-	-	ROUTE DRAIN TO NEAREST FLOOR SINK

FIXTURE UNIT CALCULATION - WOODS COFFEE

CALCULATIONS ARE BASED ON 2021 UPC TABLES A103.1, 702.1, AND 703.2.

FIXTURE TAG	FIXTURE	FIXTURE UNITS				QUANTITY	TOTAL FIXTURE UNITS			
		TOTAL	CW	HW	W/V		SERVICE	CW ONLY	HW ONLY	W/V ONLY
P7.30 P7.50	PUBLIC LAVATORY	1	0.75	0.75	1	2	2	1.5	1.5	2
P7.60	TANK TYPE WATER CLOSET (TANK TYPE)	2.5	2.5	0	4	2	5	5	0	8
E4.08	WASHING MACHINE	4	3	3	3	1	4	3	3	3
P7.35 P7.51 P7.54	HAND SINK	1	0.75	0.75	1	2	2	1.5	1.5	2
P7.33 P7.55	DUMP SINK	2	1.5	1.5	0	1	2	1.5	1.5	0
P7.36 P7.53	3-COMPARTMENT SINK	4	3	3	0	1	4	3	3	0
P7.34 P7.52	MOP SINK	3	2.25	2.25	3	1	3	2.25	2.25	3
E4.04	DISHWASHER	3	0	3	0	1	3	0	3	0
P7.37	DIPPER WELL	0.5	0.5	0	0	5	2.5	2.5	0	0
P7.38	COLD WATER SILL FAUCET (SERVES CHEMICAL DISPENSER)	0.5	0.5	0	0	1	0.5	0.5	0	0
P7.39	HOT WATER SILL FAUCET (SERVES CHEMICAL DISPENSER)	0.5	0	0.5	0	2	1	0	1	0
P7.42	GLASS RINSER	0.5	0.5	0	0	3	1.5	1.5	0	0
P7.70	WATER FILTER	8.5	8.5	0	0	1	8.5	8.5	0	0
E4.01	BATCH BREWER (FILTERED)	1	1	0	0	1	1	1	0	0
E4.07	ESPRESSO MACHINE (FILTERED)	1	1	0	0	3	3	3	0	0
P7.32	GLASS FILLER (FILTERED)	0.5	0.5	0	0	3	1.5	1.5	0	0
E4.09	HOT WATER TAP (FILTERED)	1	1	0	0	2	2	2	0	0
E4.42	ICE MACHINE (FILTERED)	1	1	0	0	1	1	1	0	0
P7.58	EYE WASH (EMERGENCY FIXTURE)	1.5	1.125	1.125	0	1	1.5	1.125	1.125	0
2"FS-1	2" FLOOR SINK	0	0	0	2	2	0	0	0	4
2"FS-2	2" FLOOR SINK	0	0	0	4	1	0	0	0	4
3"FS-1	3" FLOOR SINK	0	0	0	5	3	0	0	0	15
3"FS-2	3" FLOOR SINK	0	0	0	6	1	0	0	0	6
(E) HB-1	EXISTING HOSE BIB	2.5/1	2.5/1	0	0	2	3.5	3.5	0	0
							44	35.375	17.875	47
		TOTAL	CW	HW	W/V					
	TOTAL FIXTURE UNITS TENAMENT SPACE:	44	35.375	17.875	47					
	PEAK FLOW:	26 GPM								
		WATER	SEWER							
	REQUIRED SERVICE SIZE TO TENANT SPACE:	1-1/4"	4"							

SUPPLY PRESSURE CALCULATIONS	
STREET TO BUILDING ENTRY	
STATIC PRESSURE @ METER, PSI	54
PER CITY PRESSURE ESTIMATE DATED 4/13/26	
WATER METER LOSS, PSI	5
BACKFLOW PREVENTER, PSI	12
EST. PIPING SYSTEM LENGTH, FEET	67
FITTING ALLOWANCE, FEET	16.8
ZONE FRICTION LOSS FACTOR, PSI/100'	6.5
TOTAL ZONE FRICTION LOSS, PSI	5.4
MINIMUM PRESSURE AT BUILDING ENTRY , PSI	31.6
BUILDING ENTRY TO FURTHEST FIXTURE	
MINIMUM PRESSURE AT BUILDING ENTRY, PSI	31.6
STATIC HEAD, PSI	7.1
EST. PIPING SYSTEM LENGTH, FEET	80
FITTING ALLOWANCE, FEET	20.0
ZONE FRICTION LOSS FACTOR, PSI/100'	4.0
TOTAL ZONE FRICTION LOSS, PSI	4.0
MINIMUM PRESSURE AT FURTHEST FIXTURE, PSI	20.4

PIPE SIZING FOR COPPER PIPE AT 6.5 PSI/100' WITH HUNTER'S CURVE - FLUSH TANK SIZING

Pipe Size	41° COLD WATER		
	WSFU	GPM	FT/S
½"	1.7	2.7	3.8
¾"	8.8	7.4	4.9
1"	22.0	15.2	5.9
1 ¼"	44.5	26.8	6.8
1 ½"	94.9	42.8	7.7
2"	260.8	77.2	8.0
2 ½"	470.0	119.0	8.0
3"	749.2	169.9	8.0
4"	1782.4	303.2	8.0

PIPE SIZING FOR PEX PIPE AT 4 PSI/100' WITH HUNTER'S CURVE - FLUSH TANK SIZING

Pipe Size	41° COLD WATER			120° HOT WATER			110° RECIRCULATED	
	WSFU	GPM	FT/S	WSFU	GPM	FT/S	GPM	FT/S
½"	0.4	1.4	2.6	0.7	1.7	3.0	1.1	2.0
¾"	3.7	3.7	3.3	4.5	4.3	3.9	2.2	2.0
1"	8.5	7.3	4.0	10.7	8.3	4.6	3.6	2.0
1 ¼"	17.0	12.5	4.6	20.5	14.3	5.3	5.4	2.0
1 ½"	29.3	19.6	5.2	34.6	22.3	5.9	7.6	2.0
2"	85.7	40.4	6.2	107.2	45.8	7.0	13.0	2.0
2 ½"	230.5	71.1	7.2	270.6	79.1	8.0	19.8	2.0
3"	446.5	114.3	8.1	439.0	112.8	8.0	28.2	2.0

ELECTRIC TANK TYPE WATER HEATER SCHEDULE

	SERVICE	GPH RECOVERY @ 100°F TR	STORAGE GAL	WEIGHT LB	HEATER, KW	DIMENSIONS (IN)	ELECTRICAL	BASIS OF DESIGN
WH-1	KITCHEN & RESTROOM	99	50	687	24	24" x 52 ⅝"	208V/3P	BRADFORD WHITE CHED-50

EXPANSION TANK SCHEDULE

EQUIP NO.	SERVICE	CAPACITY (GAL)	TANK SIZE		OPERATING WEIGHT (LBS)	BASIS OF DESIGN
			DIAMETER (IN)	HEIGHT (IN)		
ET-1	RESTAURANT	4.4	11	15	45	AMTROL ST-12(1)

NOTES: (1) CONTRACTOR SHALL INSTALL IN ACCORDANCE WITH MANUFACTURER'S REQUIREMENTS.

HOT WATER CIRCULATION PUMP SCHEDULE

EQUIP NO.	SERVICE	FLOW, GPM	HEAD, FT	ELECTRICAL		WEIGHT, LBS	BASIS OF DESIGN (1)
				VOLTAGE	HP		
HWCP-1	HOT WATER CIRCULATION	2	10	115V/1P	1/2	5	BELL & GOSSETT ECOCIRC 20-18

NOTES: (1) ALL BRONZE, MAINTENANCE FREE, SUITABLE FOR POTABLE WATER APPLICATION.

PIPE MATERIALS

PIPE TYPE	MATERIAL	JOINT	NOTES
WATER DISTRIBUTION PIPING - WATER ENTRY	COPPER TYPE L	SOLDERED, PRESS, OR PTC FITTINGS	2
WATER DISTRIBUTION PIPING	PEX TYPE A	EXPANSION, CRIMP, OR PTC FITTINGS	2
WASTE AND VENT PIPING	SCH 40 SOLID CORE PVC	SOLVENT CEMENT FITTINGS	1,2,3
CONDENSATE DRAIN PIPING	COPPER, TYPE M.	SOLDERED FITTINGS	2
NATURAL GAS PIPING	STEEL PIPE, ASTM A 53; TYPE E OR S; GRADE B; SCHEDULE 40	WELDED OR THREADED FITTINGS	2

NOTES:

1. ALL SANITARY SYSTEM MATERIALS SHALL BE LISTED BY AN APPROVED LISTING AGENCY.
2. PROVIDE THERMAL EXPANSION LOOPS AND SUPPORT AT PROPER INTERVALS FOR ALL PIPING PER MANUFACTURER REQUIREMENTS.
3. SOLVENT CEMENT AND PRIMER SHALL BE IN COMPLIANCE WITH INSTALLED PER ASTM F656 AND ASTM D2564.
4. PLASTIC WRAP UNDERGROUND WATER SUPPLY PIPING TO PREVENT CORROSION.

2021 WSEC TABLE 403.10.3
MINIMUM PIPE INSULATION THICKNESS (INCHES)(1.1)

FLUID OPERATING TEMPERATURE RANGE AND USAGE (°F)	INSULATION CONDUCTIVITY		NOMINAL PIPE OR TUBE SIZE (INCHES)				
	CONDUCTIVITY, BTU*IN/(HR*FT^2**F)(1.2)	MEAN RATING TEMPERATURE, °F	<1	1 TO 1½	1½ TO 4	4 TO 8	≥8
>350	0.32-0.34	250	4.5	5.0	5.0	5.0	5.0
251-350	0.29-0.32	200	3.0	4.0	4.5	4.5	4.5
201-250	0.27-0.30	150	2.5	2.5	2.5	3.0	3.0
141-200	0.25-0.29	125	1.5	1.5	2.0	2.0	2.0
105-140	0.21-0.28	100	1.0	1.0	1.5	1.5	1.5
40-60	0.21-0.27	75	0.5	0.5	1.0	1.0	1.0
<40	0.20-0.26	75	0.5	1.0	1.0	1.0	1.5

NOTES:

1. TABLE NOTES
   - 1.1. FOR PIPING SMALLER THAN 1½" AND LOCATED IN PARTITIONS WITHIN CONDITIONED SPACES, REDUCTION OF THESE THICKNESSES BY 1" SHALL BE PERMITTED (BEFORE THICKNESS ADJUSTMENTS REQUIRED BY FOOTNOTE 1.2) BUT NOT TO A THICKNESS OF LESS THAN 1".
   - 1.2. FOR INSULATION OUTSIDE THE STATED CONDUCTIVITY RANGE, THE MINIMUM THICKNESS (T) SHALL BE DETERMINED AS FOLLOWS:
     T=r{(1+t/r)^(K/k)-1}
     WHERE:
     T = MINIMUM INSULATION THICKNESS
     r = ACTUAL OUTSIDE RADIUS OF PIPE
     t = INSULATION THICKNESS LISTED IN THE TABLE FOR APPLICABLE FLUID TEMPERATURE AND PIPE SIZE
     K = CONDUCTIVITY OF ALTERNATE MATERIAL AT MEAN RATING TEMPERATURE INDICATED FOR THE APPLICABLE FLUID TEMPERATURE
     k = THE UPPER VALUE OF THE CONDUCTIVITY RANGE LISTED IN THE TABLE FOR THE APPLICABLE FLUID TEMPERATURE.
   - 1.3. FOR DIRECT-BURIED HEATING AND HOT WATER SYSTEM PIPING, REDUCTION OF THESE THICKNESSES BY 1½" SHALL BE PERMITTED (BEFORE THICKNESS ADJUSTMENT REQUIRED IN FOOTNOTE 1.2 BUT NOT TO THICKNESSES LESS THAN 1".
2. PIPE INSULATION SHALL BE CONTINUOUS, INCLUDING THROUGH HANGERS AND SUPPORTS, SUCH THAT THERMAL BRIDGING IS PREVENTED, EXCEPT WHEN THE PIPING PASSES THROUGH FRAMING MEMBER.
3. TUBULAR INSULATION SHALL NOT BE REQUIRED ON THE FOLLOWING.
   - 3.1. THE TUBING FROM THE CONNECTION AT THE TERMINATION OF THE FIXTURE SUPPLY PIPING TO A PLUMBING FIXTURE OR PLUMBING APPLIANCE.
   - 3.2. VALVES, PUMPS, STRAINERS, AND THREADED UNIONS IN PIPING THAT IS 1" OR LESS IN NOMINAL DIAMETER.
   - 3.3. PIPING FROM USER-CONTROLLED SHOWER AND BATH MIXING VALVES TO THE WATER OUTLETS.
   - 3.4. COLD-WATER PIPING OF A DEMAND RECIRCULATION SYSTEM.
   - 3.5. TUBING FROM A HOT DRINKING-WATER HEATING UNIT TO THE WATER OUTLET.
   - 3.6. PIPING AT LOCATIONS WHERE A VERTICAL SUPPORT OF THE PIPING IS INSTALLED.
   - 3.7. PIPING SURROUNDED BY BUILDING INSULATION WITH A THERMAL RESISTANCE (R-VALUE) OF NOT LESS THAN R-3.
   - 3.8. HOT WATER PIPING THAT IS PART OF THE FINAL PIPE RUN TO THE PLUMBING FIXTURE AND IS NOT PART OF THE HEATED-WATER CIRCULATION SYSTEM CIRCULATION PATH IS NOT REQUIRED TO MEET THE MINIMUM INSULATION REQUIREMENTS OF SECTION C404.6

PLUMBING FIXTURE FLOW RATES PER WAC 51-56-0400

FIXTURE TYPE	MAXIMUM FLOW RATE	NOTES
SHOWERHEADS	1.8 GPM @ 80 PSI	
LAVATORY FAUCETS, RESIDENTIAL	1.2 GPM @ 60 PSI	1
LAVATORY FAUCETS, NON-RESIDENTIAL	0.5 GPM @ 60 PSI	2
KITCHEN FAUCETS	1.8 GPM @ 60 PSI	3
GRAVITY TANK-TYPE WATER CLOSETS	1.28 GALLONS/FLUSH	4
FLUSHOMETER TANK WATER CLOSETS	1.28 GALLONS/FLUSH	4
FLUSHOMETER VALVE WATER CLOSETS	1.28 GALLONS/FLUSH	4
ELECTROMECHANICAL HYDRAULIC WATER CLOSETS	1.28 GALLONS/FLUSH	4
WALL-MOUNTED URINALS	0.125 GALLONS/FLUSH	
FLOOR-MOUNTED URINALS	0.5 GALLONS/FLUSH	

NOTES:

1. RESIDENTIAL LAVATORY FAUCETS SHALL NOT HAVE A FLOW RATE LESS THAN 0.8 GPM AT 20 PSI.
2. WHERE COMPLYING FAUCETS ARE UNAVAILABLE, AERATORS RATED AT 0.35 GPM OR OTHER MEANS MAY BE USED TO ACHIEVE REDUCTION.
3. KITECHEN FAUCETS MAY TEMPORARILY INCREASE FLOW ABOVE THE MAXIMUM RATE, BUT NOT ABOVE 2.2 GPM @ 60 PSI AND MUST DEFAULT TO A MAXIMUM FLOW RATE OF 1.8 GPM @ 60 PSI
4. INCLUDES SINGLE AND DUAL FLUSH WATER CLOSETS WITH AN EFFECTIVE FLUSH OF 1.28 GALLONS OR LESS. SINGLE FLUSH TOILETS - THE EFFECTIVE FLUSH VOLUME SHALL NOT EXCEED 1.28 GALLONS. THE EFFECTIVE FLUSH VOLUME IS THE AVERAGE FLUSH VOLUME WHEN TESTED IN ACCORDANCE WITH ASME A112.19.2. FLUSH VOLUMES WILL BE TESTED IN ACCORDANCE WITH ASME A112.19.2 AND ASME A112.19.14.

City of Puyallup
Development & Permitting Services
ISSUED PERMIT
Building | Planning
Engineering | Public Works
Fire | Traffic

NO.	DATE	DESCRIPTION
1	06/17/2026	PERMIT RESUBMITTAL #1
	04/29/2026	PERMIT SET

REVISIONS

REGISTERED PROFESSIONAL ENGINEER
FRED JACKSON
STATE OF WASHINGTON
04-29-26

ROBISON ENGINEERING, INC
19401 40TH AVE W., SUITE 302
LYNNWOOD, WA 98036
206.364.3343 TEL
REI PROJECT: #1459 - 003
CONTACT: LUKE AHLQUIST

DRAWN: LA
DESIGNED: LA
CHECKED: LA
APPROVED: RJ, JR

PROJECT: WOODS COFFEE - PUYALLUP
1115 E. MAIN STREET
PUYALLUP, WA 98372

ROBISON ENGINEERING, INC
19401 40TH AVE W. SUITE 302
LYNNWOOD, WA 98036
PHONE:(206)364-3343
CONTACT: ALEX LEITCH

DATE: 06/17/2026

SHEET TITLE: PLUMBING CALCULATIONS. SCHEDULES & TABLES

PRCTI20260728

SHEET NO. P001

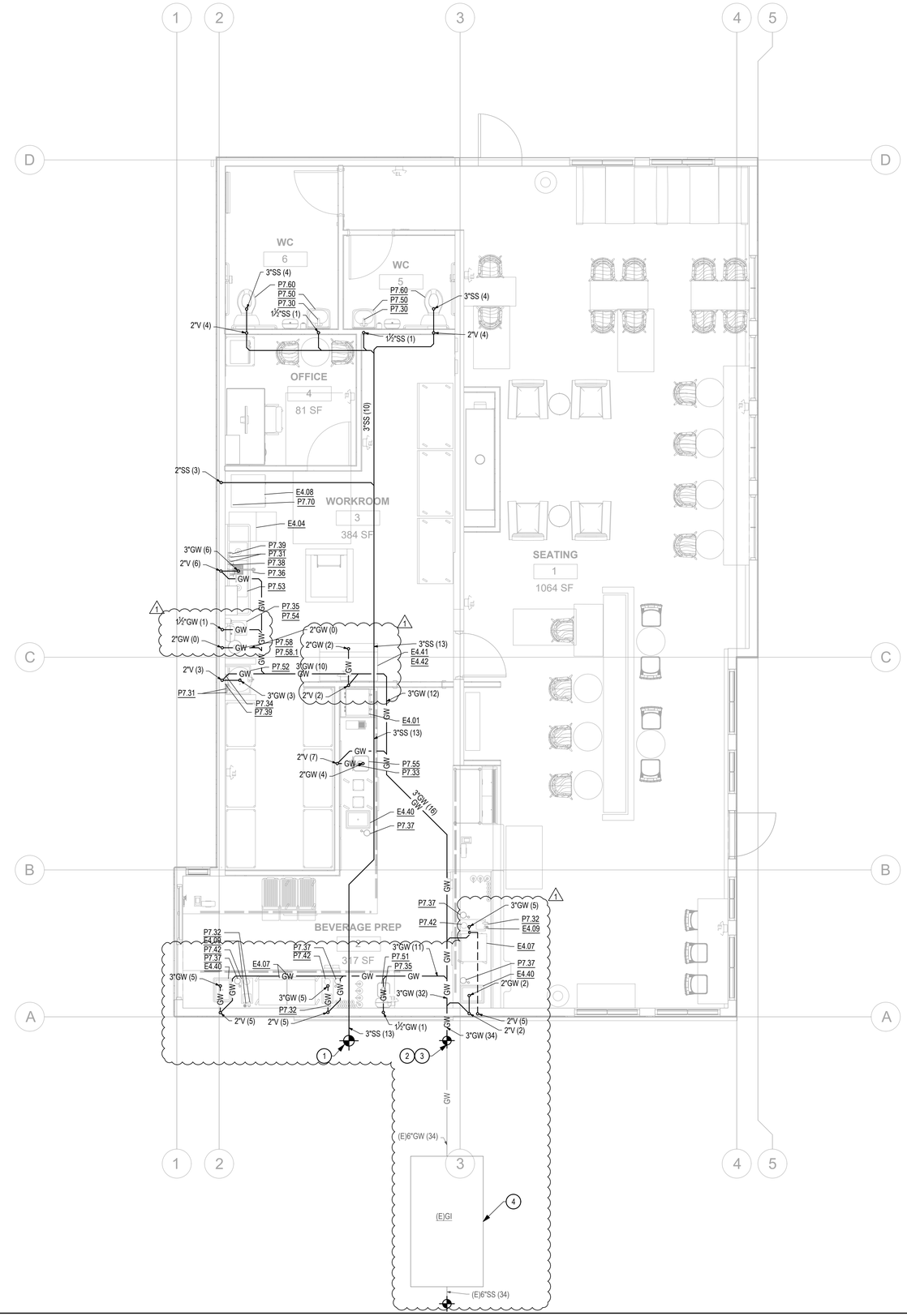

City of Puyallup
Development & Permitting Services
ISSUED PERMIT

Building	Planning
Engineering	Public Works
Fire	Traffic

According to the plumbing correction letter from Robison Engineering, Inc. dated June 17, 2026 the grease waste load from the proposed plumbing fixtures discharging to the existing 1,000 gallon grease interceptor is 34 DFU. The existing grease interceptor is adequately sized, although near maximum capacity. The calculation matrix for the DFU can be found on sheet P400.

TABLE 1014.3.6
GRAVITY GREASE INTERCEPTOR SIZING

DRAINAGE FIXTURE UNITS[1, 3] (DFUs)	INTERCEPTOR VOLUME[2] (gallons)
8	500
21	750
35	1000
90	1250
172	1500
216	2000
307	2500
342	3000
428	4000
576	5000
720	7500
2112	10 000
2640	15 000

CONTRACTOR NOTES

1. REFERENCE ARCHITECTURAL DRAWING 1/A2.1 FOR FLOOR PENETRATION LOCATIONS.

GENERAL NOTES

1. WASTE & VENT SIZING: WASTE & VENT PIPING SIZED PER 2021 UPC TABLE 703.2. PIPING 4" AND LARGER MAY BE SLOPED AT 1/8" PER FOOT. PIPING SMALLER THAN 4" SHALL BE SLOPED AT 1/4" PER FOOT.

PIPE SIZE	VERT.	HORIZ.	VENT
1½"	2 DFU	1 DFU	8 DFU
2"	16 DFU	8 DFU	24 DFU
3"	48 DFU	35 DFU	84 DFU
4"	256 DFU	172 DFU	256 DFU
6"	1,380 DFU	576 DFU	1,380 DFU
8"	3,600 DFU	2,112 DFU	3,600 DFU

2. CITY OF PUYALLUP REQUIRES THAT ALL GREASE WASTE LINES HAVE PERMANENTLY FIXED SCREENS WITH MAXIUMUM 1/4 INCH OPENINGS TO PREVENT THE PASS THROUGH OF LARGER SOLIDS INTO THE GI AND/OR WASTEWATER COLLECTION SYSTEM. COMMERCIAL FOOD SERVICE DISCHARGES ARE PROHIBITED FORM THE USE OF FOOD GRINDERS OR GARBAGE DISPOSALS.

KEY NOTES

1. APPROXIMATE LOCATION OF EXISTING 6"SS POC. CONTRACTOR TO VERIFY SIZE AND LOCATION OF EXISTING PIPING.
2. APPROXIMATE LOCATION OF EXISTING 6"GW POC TO BUILDING. CONTRACTOR TO VERIFY SIZE AND LOCATION OF EXISTING PIPING.
3. GW PIPING TO EXISTING 1,000 GALLON GREASE INTERCEPTOR IN SITE. CONTRACTOR TO VERIFY EXISTING SIZE AND CONDITION OF GREASE INTERCEPTOR. PER 2021 UPC TABLE 1014.3.6 GREASE WASTE LOAD OF 35 DFU EQUATES TO 1,000 GALLON GREASE INTERCEPTOR.
4. APPROXIMATE LOCATION OF EXISTING 1000 GALLON GREASE INTERECPTOR SERVING BUILDING.

UNDERSLAB

WASTE & VENT FLOOR PLAN

SCALE: 1/4" = 1'-0"

NO.	DATE	DESCRIPTION
1	06/17/2026	PERMIT RESUBMITTAL #1
	04/29/2026	PERMIT SET

REVISIONS

ALED JACKSON
STATE OF WASHINGTON
REGISTERED PROFESSIONAL ENGINEER
04-29-26

ROBISON ENGINEERING, INC
19401 40TH AVE W., SUITE 302
LYNNWOOD, WA 98036
206.364.3343 TEL
REI PROJECT: #1459 - 003
CONTACT: LUKE AHLQUIST

DRAWN: LA
DESIGNED: LA
CHECKED: LA
APPROVED: RJ, JR

PROJECT: WOODS COFFEE - PUYALLUP
1115 E. MAIN STREET
PUYALLUP, WA 98372

ROBISON ENGINEERING, INC
19401 40TH AVE W., SUITE 302
LYNNWOOD, WA 98036
PHONE:(206)364-3343
CONTACT: ALEX LEITCH

DATE: 06/17/2026

SHEET TITLE: UNDERSLAB WASTE & VENT PLAN

PRCTI20260728

SHEET NO. P200

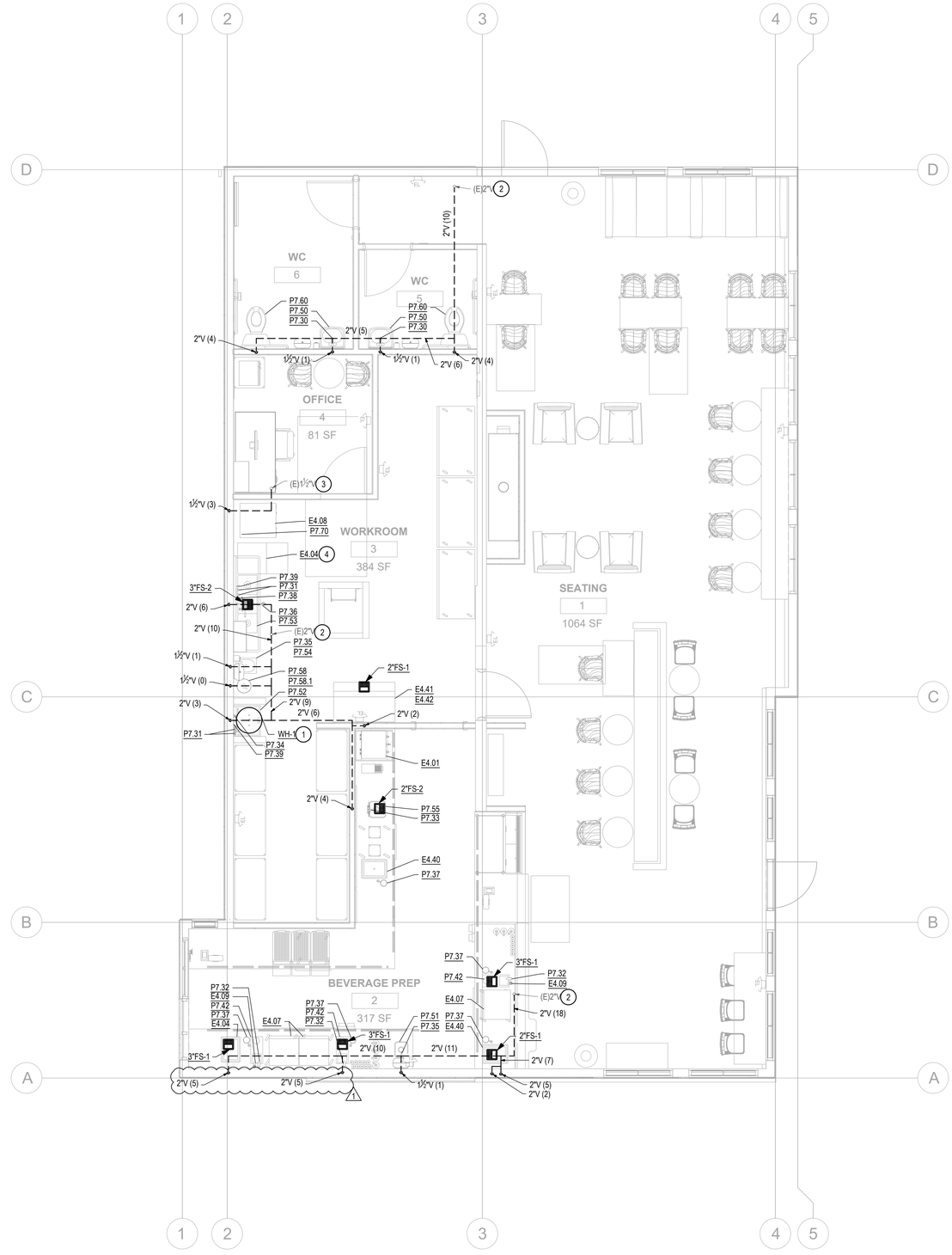

City of Puyallup
Development & Permitting Services
ISSUED PERMIT

Building	Planning
Engineering	Public Works
Fire	Traffic

GENERAL NOTES

1. NOT USED.

KEY NOTES

1. ROUTE T&P VALVE AND DRAIN PAN TO MOP SINK. INDIRECTLY DISCHARGE TO MOP SINK.
2. EXISTING VTR TO BE REUSED. CONTRACTOR TO VERIFY CONDITION AND LOCATION OF EXISTING PIPING. VTR SHALL BE 2" OR LARGER.
3. EXISTING VTR TO BE REUSED. CONTRACTOR TO VERIFY CONDITION AND LOCATION OF EXISTING PIPING. VTR SHALL BE 1-1/2" OR LARGER.
4. ROUTE DRAIN FROM DISHWASHER E4.04 TO 3"FS-1 SERVING P7.53.

LEVEL 1

WASTE & VENT FLOOR PLAN

SCALE: 1/4" = 1'-0"

NO.	DATE	DESCRIPTION
1	06/17/2026	PERMIT RESUBMITTAL #1
	04/29/2026	PERMIT SET

REVISIONS

ALEX JACKSON
STATE OF WASHINGTON
REGISTERED PROFESSIONAL ENGINEER
04-29-26

ROBISON ENGINEERING, INC
19401 40TH AVE W, SUITE 302
LYNNWOOD, WA 98036
206.364.3343 TEL
REI PROJECT: #1459-003
CONTACT: LUKE AHLQUIST

DRAWN: LA
DESIGNED: LA
CHECKED: LA
APPROVED: RJ, JR

PROJECT: WOODS COFFEE - PUYALLUP
1115 E. MAIN STREET
PUYALLUP, WA 98372

ROBISON ENGINEERING, INC
19401 40TH AVE W, SUITE 302
LYNNWOOD, WA 98036
PHONE:(206)364-3343
CONTACT: ALEX LEITCH

DATE:
06/17/2026

SHEET TITLE:
WASTE & VENT FLOOR PLAN

PRCTI20260728

SHEET NO.
P201

COPYRIGHT 2026, ROBISON ENGINEERING, INC.
LAHLQUIST F:\1459-002 WOODS COFFEE - ISSAQUAH, WA\DWG\PLUMBING\VR_WASTE\WASTE_BTH.DWG 01-19-2026 16:28

City of Puyallup
Development & Permitting Services
ISSUED PERMIT

Building	Planning
Engineering	Public Works
Fire	Traffic

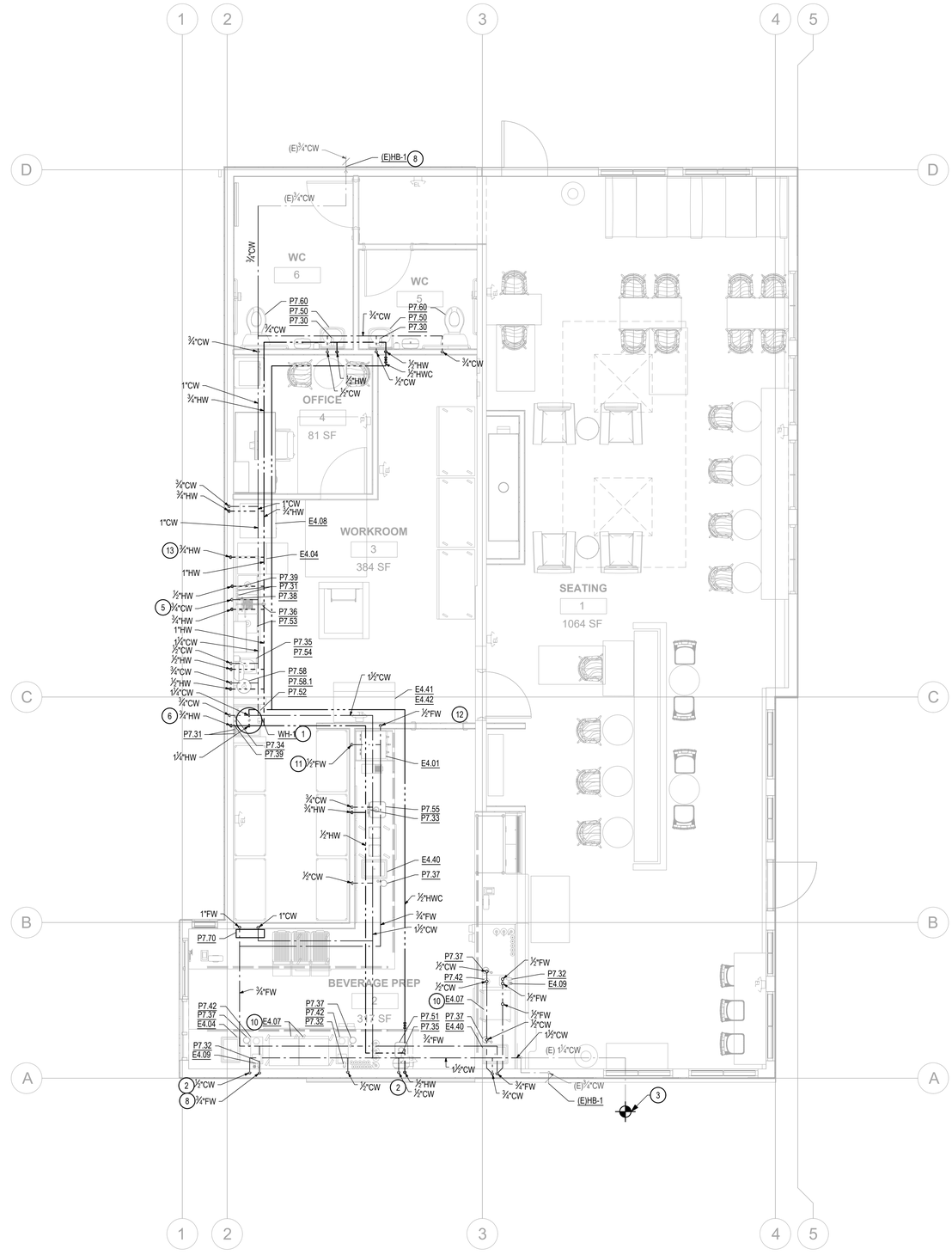

GENERAL NOTES

1. NOT USED.

KEY NOTES

1. SEE WATER HEATER DETAIL 8/P600
2. 1/2"CW DOWN TO P7.37 & P7.42.
3. POC TO EXISTING 1-1/4" CW SERVING SPACE. CONTRACTOR TO FIELD VERIFY SIZE AND LOCATION. NOTIFY ENGINEER IF SIZE IS BELOW 1-1/4".
4. HW DOWN FOR BOTH P7.36 & P7.39
5. CW DOWN FOR BOTH P7.36 & P7.38
6. HW DOWN FOR BOTH P7.34 & P7.39
7. ½"FW DOWN FOR P7.32.
8. ½"FW DOWN FOR P7.32, E4.09 AND E4.07.
9. POC TO EXISTING GAS SYSTEM. CONTRACTOR TO FIELD VERIFY SIZE AND LOCATION.
10. PROVIDE RPBA-1 FOR E4.07.
11. PROVIDE RPBA-1 FOR E4.01.
12. PROVIDE RPBA-1 FOR E4.42.
13. PROVIDE RPBA-1 FOR E4.04.

SUPPLY FLOOR PLANS

SCALE: 1/4" = 1'-0"

N

NO.	DATE	DESCRIPTION
1	06/17/2026	PERMIT RESUBMITTAL #1
	04/29/2026	PERMIT SET

REVISIONS

LEED JACKSON
STATE OF WASHINGTON
REGISTERED PROFESSIONAL ENGINEER
04-29-26

ROBISON ENGINEERING, INC
19401-40TH AVE W., SUITE 302
LYNNWOOD, WA 98036
206.364.3343 TEL
REI PROJECT: #1459- 003
CONTACT: LUKE AHLQUIST

DRAWN: LA
DESIGNED: LA
CHECKED: LA
APPROVED: RJ, JR

PROJECT: WOODS COFFEE - PUYALLUP
1115 E. MAIN STREET
PUYALLUP, WA 98372

ROBISON ENGINEERING, INC
19401 40TH AVE W. SUITE 302
LYNNWOOD, WA 98036
PHONE:(206)364-3343
CONTACT: ALEX LEITCH

DATE:
06/17/2026

SHEET TITLE:
SUPPLY PLAN

PRCTI20260728

SHEET NO.
P301

COPYRIGHT 2026, ROBISON ENGINEERING, INC.
LAHLQUIST F:\1459-002 WOODS COFFEE - ISSAQUAH, WA\DWG\PLUMBING\XR_SUPPLY\SUPPLY_4TH.DWG 01-19-2026 16:28

City of Puyallup
Development & Permitting Services
ISSUED PERMIT

Building	Planning
Engineering	Public Works
Fire	Traffic

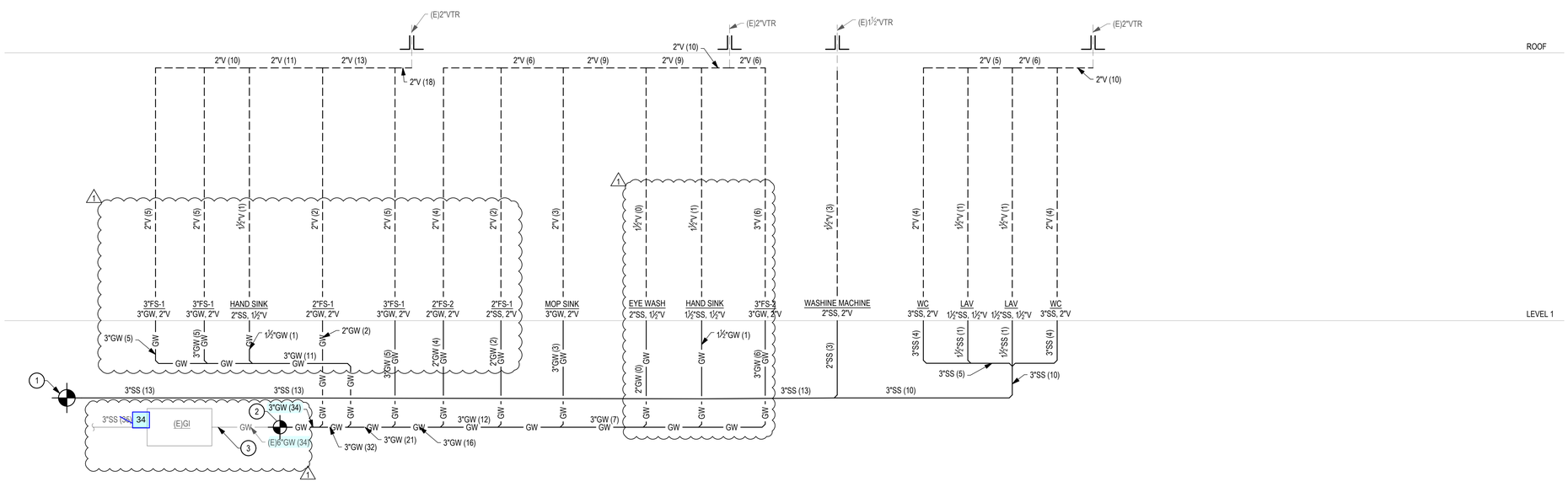

GENERAL NOTES

1. CITY OF PUYALLUP REQUIRES THAT ALL GREASE WASTE LINES HAVE PERMANENTLY FIXED SCREENS WITH MAXIUMUM 1/4 INCH OPENINGS TO PREVENT THE PASS THROUGH OF LARGER SOLIDS INTO THE GI AND/OR WASTEWATER COLLECTION SYSTEM. COMMERCIAL FOOD SERVICE DISCHARGES ARE PROHIBITED FORM THE USE OF FOOD GRINDERS OR GARBAGE DISPOSALS.

KEY NOTES

1. CONNECT TO EXISTING 6"SS POC. CONTRACTOR TO VERIFY SIZE AND LOCATION AND SHALL NOTIFY ENGINEER IF LOCATION DIFFERS FROM WHAT IS SHOWN ON PLANS.
2. CONNECT TO EXISTING 6"GW POC TO BUILDING. CONTRACTOR TO VERIFY SIZE AND LOCATION OS EXISTING PIPING.
3. GW PIPING TO EXISTING 1,000 GALLON GREASE INTERCEPTOR IN SITE. CONTRACTOR TO VERIFY EXISTING SIZE AND CONDITION OF GREASE INTERCEPTOR. PER 2021 UPC TABLE 1014.3.6 GREASE WASTE LOAD OF 35 DFU EQUATES TO 1,000 GALLON GREASE INTERCEPTOR MINIMUM SIZE.

WASTE & VENT DIAGRAM

SCALE: NONE

NO.	DATE	DESCRIPTION
	04/08/26	PERMIT SET

REVISIONS

REED JACKSON
STATE OF WASHINGTON
REGISTERED
PROFESSIONAL ENGINEER
04-08-26

ROBISON ENGINEERING, INC
19401 40TH AVE W., SUITE 302
LYNNWOOD, WA 98036
206.364.3343 TEL
REI PROJECT: #1459 - 003
CONTACT: ALEX LEITCH

DRAWN: AML
DESIGNED: AML
CHECKED: AML
APPROVED: RJ, JR

PROJECT: WOODS COFFEE - PUYALLUP
1115 E. MAIN STREET
PUYALLUP, WA 98372

DATE: 04.08.26

SHEET TITLE: WASTE & VENT DIAGRAM

PRCTI20260728

SHEET NO. P400

City of Puyallup
Development & Permitting Services
ISSUED PERMIT

Building	Planning
Engineering	Public Works
Fire	Traffic

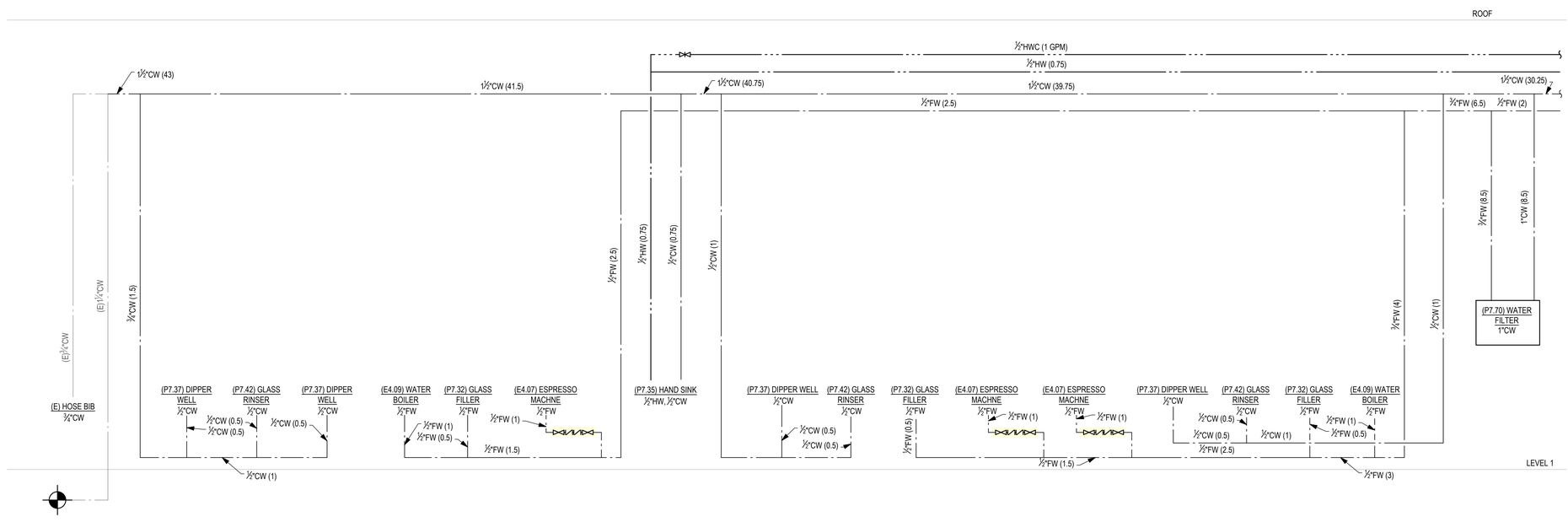

GENERAL NOTES

1. NOT USED.

KEY NOTES

1. 1½"DCW POC TO EXISTING SYSTEM.
2. ROUTE RPBA-1 DRAIN TO NEAREST INDIRECT RECEPTACLE.

SUPPLY DIAGRAM

SCALE: NONE

NO.	DATE	DESCRIPTION
	04/08/26	PERMIT SET

REVISIONS

REED JACKSON
STATE OF WASHINGTON
REGISTERED
PROFESSIONAL ENGINEER
04-08-26

ROBISON ENGINEERING, INC
19401 40TH AVE W., SUITE 302
LYNNWOOD, WA 98036
206.364.3343 TEL
REI PROJECT: #1459 - 003
CONTACT: ALEX LEITCH

DRAWN: AML
DESIGNED: AML
CHECKED: AML
APPROVED: RJ, JR

PROJECT: WOODS COFFEE - PUYALLUP
1115 E. MAIN STREET
PUYALLUP, WA 98372

DATE: 04.08.26

SHEET TITLE: SUPPLY DIAGRAM

PRCTI20260728

SHEET NO.
P500

City of Puyallup
Development & Permitting Services
ISSUED PERMIT

Building	Planning
Engineering	Public Works
Fire	Traffic

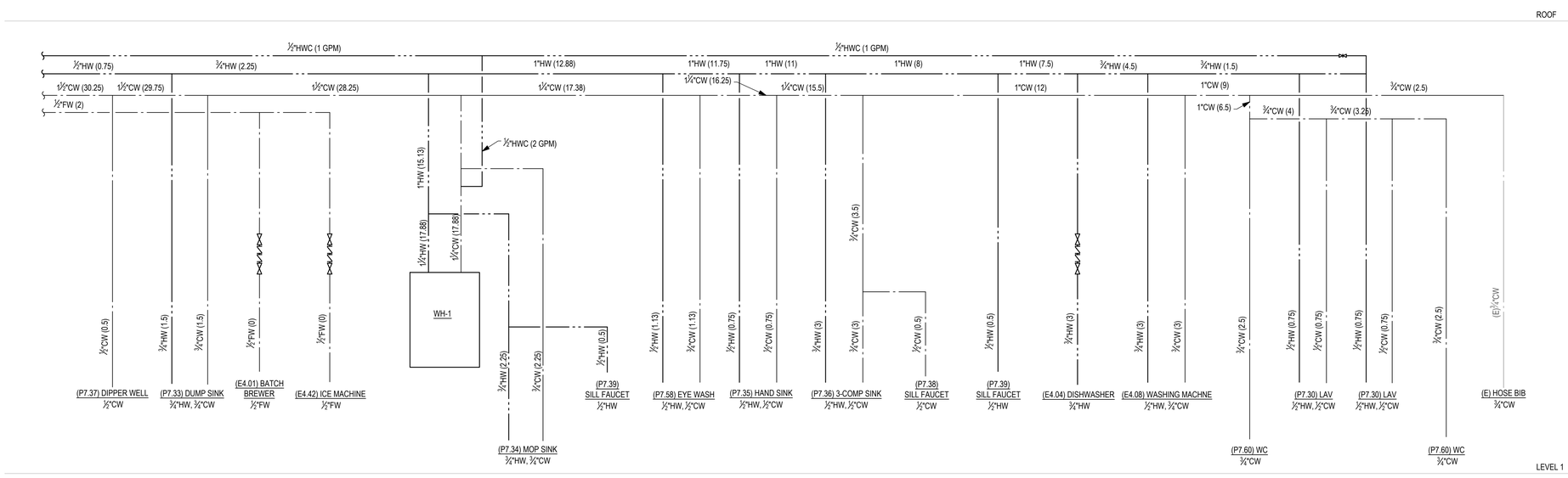

GENERAL NOTES

1. NOT USED.

KEY NOTES

1. ROUTE RPBA-1 DRAIN TO NEAREST INDIRECT RECEPTACLE.

SUPPLY DIAGRAM

SCALE: NONE

NO.	DATE	DESCRIPTION
	04/08/26	PERMIT SET

REVISIONS

REED JACKSON
STATE OF WASHINGTON
REGISTERED
PROFESSIONAL ENGINEER
04-08-26

ROBISON ENGINEERING, INC
19401 40TH AVE W., SUITE 302
LYNNWOOD, WA 98036
206.364.3343 TEL
REI PROJECT: #1459 - 003
CONTACT: ALEX LEITCH

DRAWN: AML
DESIGNED: AML
CHECKED: AML
APPROVED: RJ, JR

PROJECT: WOODS COFFEE - PUYALLUP
1115 E. MAIN STREET
PUYALLUP, WA 98372

DATE: 04.08.26

SHEET TITLE: SUPPLY DIAGRAM

PRCTI20260728

SHEET NO. P501

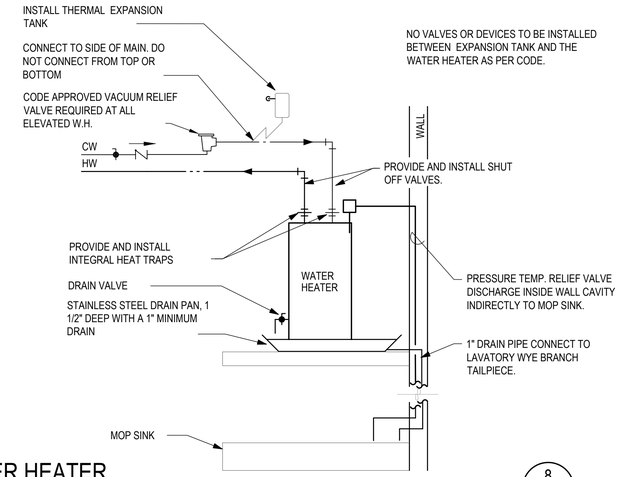

WATER HEATER

SCALE: NONE

8 / P600

AQUASTAT CONTROL OF HOT WATER CIRCULATORS

1. PROVIDE THERMOSTAT CONTROL FOR HOT WATER CIRCULATORS TO TURN OFF PUMPS WHEN THE HWC LINE IS AT TEMPERATURE.
2. AQUASTAT: HONEYWELL L4006A OR EQUIVALENT, 40F TO 180F RANGE, 5F DIFFERENTIAL.
3. AQUASTAT FURNISHED AND INSTALLED BY PLUMBER; WIRED TO PUMP BY ELECTRICAL.
4. PUMP TO BE WIRED TO TURN PUMP OFF UPON TEMPERATURE RISE TO SETPOINT
   - 120F SYSTEM CIRCULATOR SETPOINT:
     START PUMP AT 115F; STOP PUMP AT 120F
   - 140F SYSTEM CIRCULATOR SETPOINT:
     START PUMP AT 135F; STOP PUMP AT 140F
5. ELECTRICAL TO PROVIDE 7-DAY TIMECLOCK TO ENABLE CIRC PUMPS DURING BUSINESS HOURS AND DISABLE AFTER HOURS DAILY.

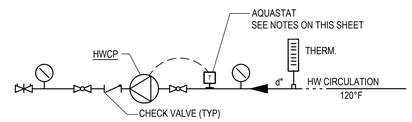

City of Puyallup
Development & Permitting Services
ISSUED PERMIT

Building	Planning
Engineering	Public Works
Fire	Traffic

HW CIRC PUMP CONTROL DETAIL

SCALE: NONE

6 / P600

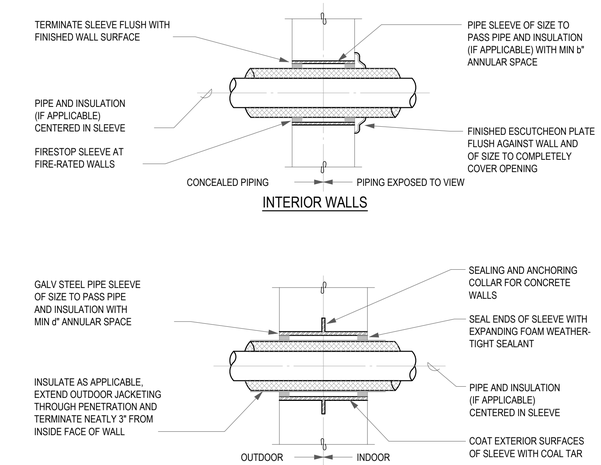

PIPE SLEEVES THROUGH WALLS

SCALE: NONE

3 / P600\

NOT USED

SCALE: NONE

7 / P600

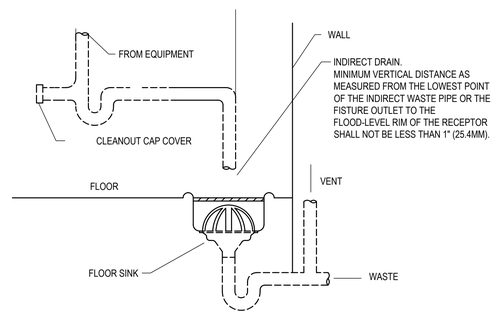

INDIRECT DRAIN TO FLOOR SINK

SCALE: NONE

5 / P600

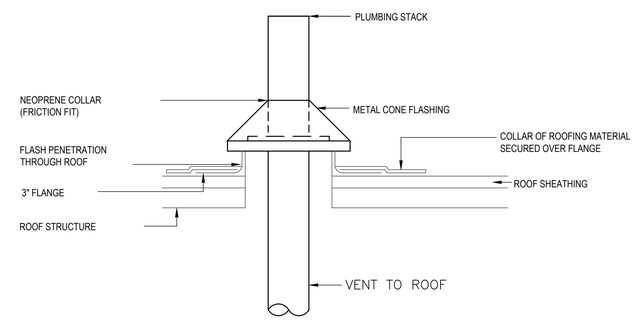

VENT THROUGH ROOF

SCALE: NONE

2 / P600

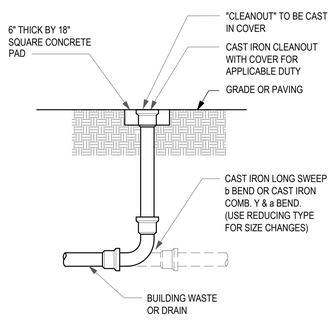

EXTERIOR CLEANOUT TO GRADE (COTG)
(LIGHT TRAFFIC AREA)

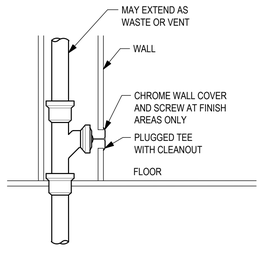

INTERIOR WALL CLEANOUT (WCO)

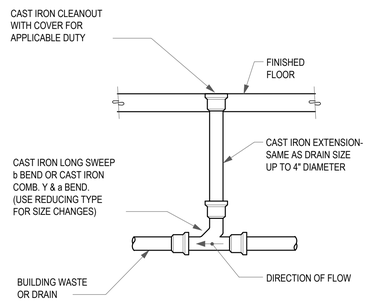

INTERIOR FLOOR CLEANOUT (FCO)

CLEANOUT DETAIL

SCALE: NONE

4 / P600

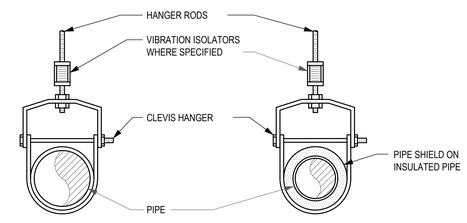

PIPE SUPPORT

SCALE: NONE

1 / P600

NO.	DATE	DESCRIPTION
1	06/17/2026	PERMIT RESUBMITTAL #1
	04/29/2026	PERMIT SET

REVISIONS

REED JACKSON
STATE OF WASHINGTON
REGISTERED PROFESSIONAL ENGINEER
04-29-26

ROBISON ENGINEERING, INC
19401 40TH AVE W., SUITE 302
LYNNWOOD, WA 98036
206.364.3343 TEL
REI PROJECT: #1459 -003
CONTACT: LUKE AHLQUIST

DRAWN: LA
DESIGNED: LA
CHECKED: LA
APPROVED: RJ, JR

PROJECT: WOODS COFFEE - PUYALLUP
1115 E. MAIN STREET
PUYALLUP, WA 98372

ROBISON ENGINEERING, INC
19401 40TH AVE W. SUITE 302
LYNNWOOD, WA 98036
PHONE:(206)364-3343
CONTACT: ALEX LEITCH

DATE:
06/17/2026

SHEET TITLE:
DETAILS

PRCTI20260728

SHEET NO.
P600