HEATH & ASSOCIATES

Transportation Planning & Engineering

TRAFFIC IMPACT ANALYSIS

South Meridian Medical

Puyallup, Washington

February 26, 2025

1011 E Main Ave Suite 453 | Puyallup, WA | 98372
(253) 770-1401| heathtraffic.com

SOUTH MERIDIAN MEDICAL
TRAFFIC IMPACT ANALYSIS

Prepared for:

IHB Architects
c/o Giuseppe Cipolla

Prepared by:

Heath & Associates
PO Box 397
Puyallup, WA 98371
(253) 770 1401
Heathtraffic.com

License:

SOUTH MERIDIAN MEDICAL
TRAFFIC IMPACT ANALYSIS

CONTENTS

TABLES

FIGURES

SOUTH MERIDIAN MEDICAL
TRAFFIC IMPACT ANALYSIS

1. INTRODUCTION

Heath & Associates has been engaged to conduct a Traffic Impact Analysis (TIA) for a proposed mixed-use project located within Puyallup. This analysis will follow information on the scoping document (conducted by Jake Traffic Engineering – JTE in October of 2024) which has been approved by the City of Puyallup.

2. PROJECT DESCRIPTION

South Meridian Medical is a proposed mixed-use development comprised of office and retail space located within the City of Puyallup. The subject site is bordered to the north by 17th Avenue SE and to the west via South Meridian situated on 0.79-acres within tax parcel number 7790000140. Site ingress/egress is proposed via one new access point which is to extend south from 17th Avenue SE. As part of site development, two non-motorist connections to the existing sidewalk along the South Meridian project frontage will be provided. **Figure 1** below shows the general site location with the subject parcel highlighted in blue. **Figure 2** on the following page displays the conceptual site plan.

Figure 1: Vicinity Map

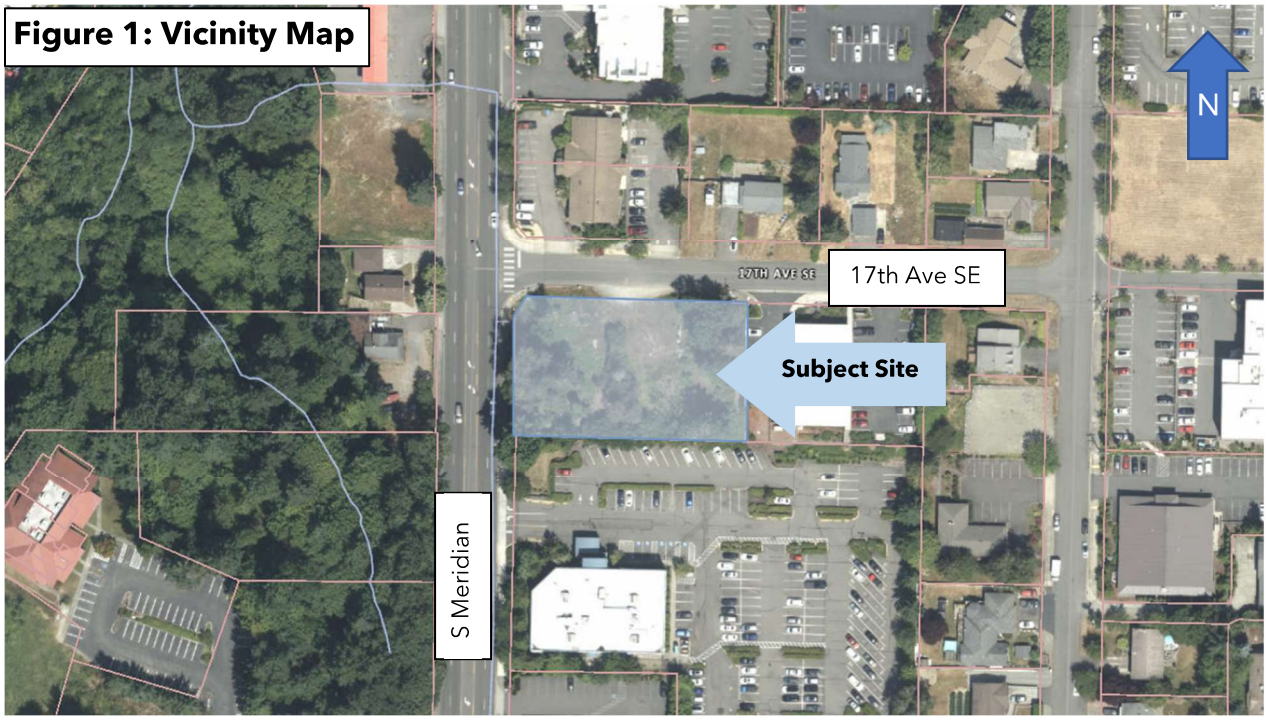

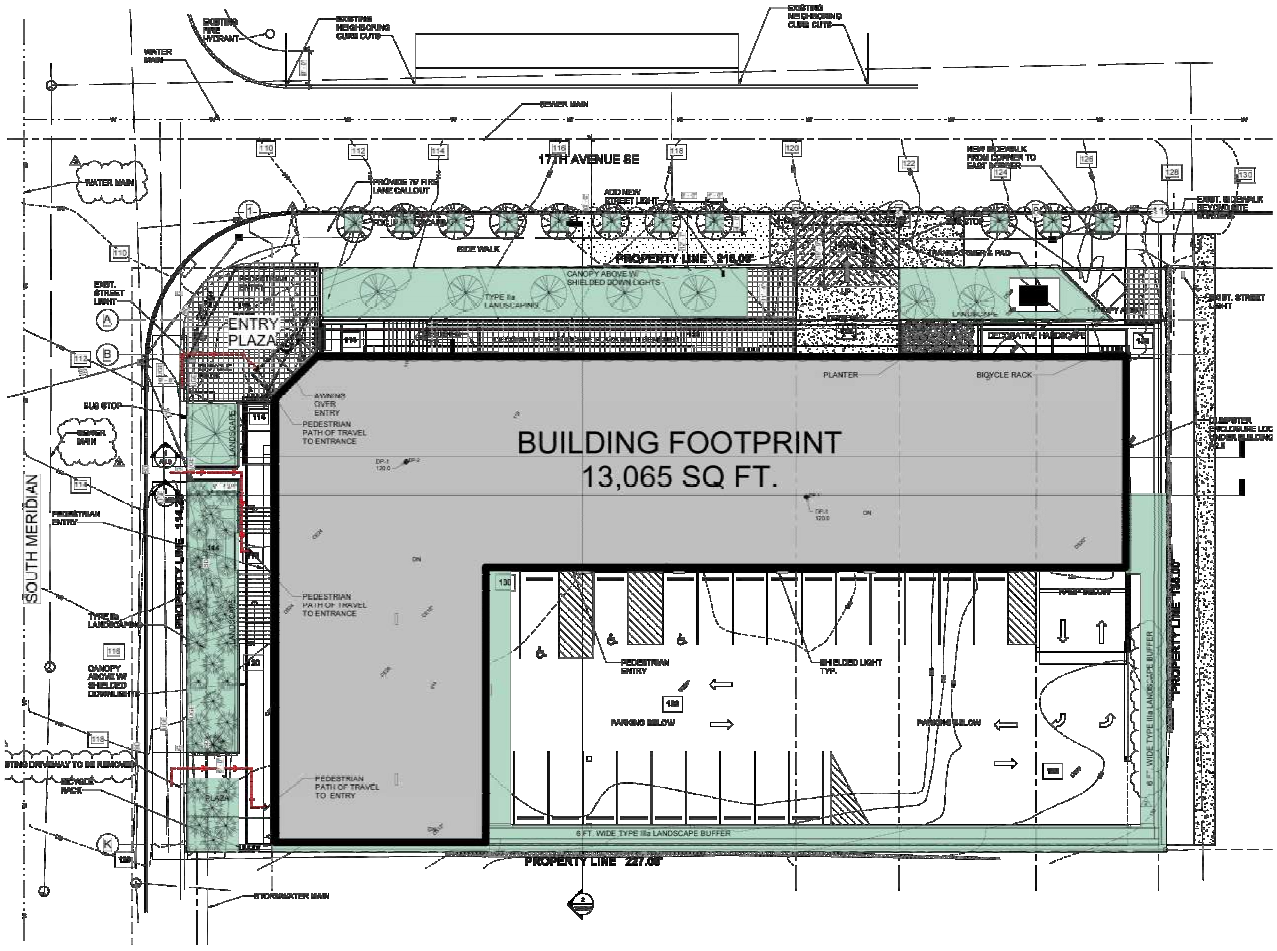

HEATH&ASSOCIATES
Transportation Planning & Engineering

SOUTH MERIDIAN MEDICAL

SITE PLAN
FIGURE 2

3. EXISTING CONDITIONS

3.1 Existing Street System

The primary roadways serving the project are listed and described below.

South Meridian: is a north-south, multi-lane major arterial bordering the subject site to the west. The roadway's cross-section is comprised of two travel lanes in each direction with a two-way left-turn-lane (TWLTL). Non-motorist infrastructure is provided along both sides of the roadway with the nearest marked pedestrian crosswalk located at the intersection with 15th Avenue SW. The posted speed limit along the roadway is 35 mph.

17th Avenue SE: is an east-west, two-lane local roadway which borders the site to the north. The roadway provides local access for commercial and residential uses and connects South Meridian to 3rd Street SE. Non-motorist infrastructure is discontinuous along the roadway. The speed limit is assumed to be 25 mph.

3.2 Roadway Improvements

The City of Puyallup's Six-Year (2023-2028) Transportation Improvement Program (TIP) was reviewed and indicated two improvements project are scheduled in the vicinity of the site. Summaries of each are provided below.

23rd Ave SE (Project #: 33): This project includes expanding 23rd into three-lanes with curb, gutter, sidewalk, bike lanes, and street lighting. A traffic signal is planned at the 7th St SE/23rd Ave SE intersection.

Meridian Overlay (Project #: 45): This project includes a grind and overlay along Meridian Avenue from 15th Avenue to 9th Avenue.

3.3 Existing Peak Hour Volumes

Field data for this study was collected in January of 2025 at the following eight intersections identified in the Traffic Scoping letter by Jake Traffic Engineering.

1. S Meridian & 7th Avenue
2. S Meridian & 9th Avenue
3. S Meridian & SR 512 Westbound (WB) Ramps
4. S Meridian & SR 512 Eastbound (EB) Ramps
5. S Meridian & 15th Avenue
6. S Meridian & 17th Avenue
7. S Meridian & 23rd Avenue
8. S Meridian & 31st Avenue

Counts were conducted from 4:00 to 6:00 PM at all intersections, as this is the standard time period for capacity evaluation. However, at the City's request, an AM analysis was also performed at the intersection of S Meridian & 15th Avenue, with counts collected from 7:00 to 9:00 AM.

Existing peak hour turning movement volumes are illustrated in **Figure 3**. It should be noted that back-ups in the AM peak hour were observed at Meridian & 15th Avenue, primarily in the southbound left-turn lane at the signal. This is further discussed in the following sections. Refer to the appendix for the individual count sheets, which also provide non-motorist activity at each study intersection.

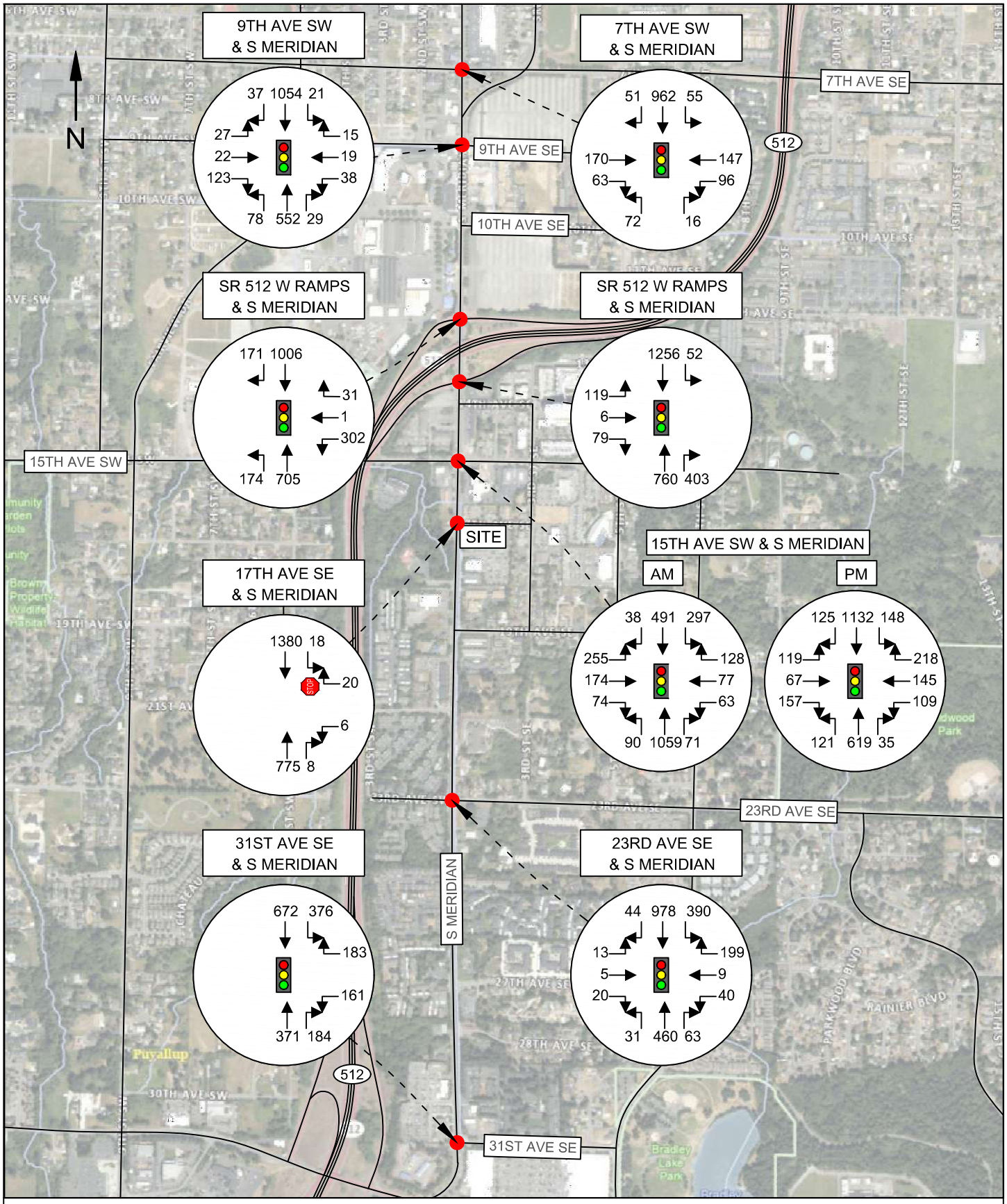

HEATH&ASSOCIATES
Transportation Planning & Engineering

SOUTH MERIDIAN MEDICAL

EXISTING PM PEAK HOUR VOLUMES
FIGURE 3

3.4 Existing Peak Hour Level of Service

Level of Service (LOS) rates[1] the quality of traffic flow and user experience, typically on a scale from A to F, where:

- **LOS A** represents free-flowing traffic with minimal delays and low congestion.
- **LOS B** indicates stable traffic flow with some minor delays.
- **LOS C** shows moderate traffic flow with noticeable delays at peak times.
- **LOS D** represents high-density traffic flow with more frequent and longer delays.
- **LOS E** signifies near-capacity conditions with significant delays and congestion.
- **LOS F** denotes over-capacity conditions, where traffic flow breaks down, resulting in severe congestion and delays.

Signalized (overall) and stop-controlled (longest delayed movement) intersections utilized the Synchro Analysis Program. Refer to **Table 1** on the following page for the PM peak hour level of service. AM analysis for the intersection with 15th Avenue has also been included.

As mentioned previously, backups were observed in the southbound left-turn lane at the Meridian Avenue & 15th Avenue intersection. Video footage was reviewed to assess the extent of the queue and identify any unserved demand[2]. Based on the review of multiple signal cycles, some southbound left-turning vehicles were unable to clear the intersection within a single cycle, resulting in unserved demand. To account for the unmet demand, the initial queue was—the number of vehicles present in a lane approach at the start of the analysis period—was estimated at 20 vehicles. The Synchro analysis was adjusted accordingly.

---

[1] *Signalized Intersections - Level of Service*

Level of Service	Control Delay per Vehicle (sec)
A	≤10
B	>10 and ≤20
C	>20 and ≤35
D	>35 and ≤55
E	>55 and ≤80
F	>80

Stop Controlled Intersections – Level of Service

Level of Service	Control Delay per Vehicle (sec)
A	≤10
B	>10 and ≤15
C	>15 and ≤25
D	>25 and ≤35
E	>35 and ≤50
F	>50

Highway Capacity Manual (HCM), 7th Edition

[2] Refers to a portion of the queue at the beginning of a green phase that were unable to complete their movement within the single cycle.

Table 1: Existing Peak Hour Level of Service

Delays given in seconds per vehicle

Intersection	Peak Hour	Critical Movement	LOS	Delay
S Meridian & 7th Ave	PM	Overall	C	23.2
S Meridian & 9th Ave	PM	Overall	B	10.7
S Meridian & SR 512 WB Ramps	PM	Overall	B	14.7
S Meridian & SR 512 EB Ramps	PM	Overall	A	6.7
S Meridian & 15th Ave	AM PM	Overall/**SB-L** Overall	D/**F** C	37.0/**93.2** 26.4
S Meridian & 17th Ave	PM	WB	B	13.4
S Meridian & 23rd Ave	PM	Overall	B	11.2
S Meridian & 31st Ave	PM	Overall	A	7.7

City of Puyallup Level of Service Standards[3]: LOS D or better.

The existing conditions analysis indicates that all intersections operate within City standards of LOS D or better. However, during the AM peak hour, the southbound left-turn movement experiences significant delays, operating at LOS F. Despite this specific approach facing challenges, the overall intersection maintains an acceptable LOS D.

3.5 Collision History

Collision History Analysis

Collision history was reviewed at the proposed access intersection of Meridian Avenue & 17th Avenue and, at per request, Meridian & 15th Avenue. The most recent full five-years (October 2019 through October of 2024) was obtained and reviewed. **Table 2** on the following page outlines yearly incidents.

[3] City of Puyallup Comprehensive Plan

Table 2: Collision History Overview

Meridian at	2019	2020	2021	2022	2023	2024	Total	Avg/Yr
1. 15th Ave	1	6	14	15	7	8	51	10.2
2. 17th Ave	1	0	0	0	2	1	4	0.8

A total of 51 collisions were recorded at S Meridian & 15th Avenue and four at S Meridian & 17th Avenue. An additional 19 incidents occurred along S Meridian within the segment between 15th and 17th Avenue.

Collision Type Analysis

Summaries of collision types that occurred at and/or related to each study intersection are provided in **Table 3** below.

Table 3: Collision History Crash Types

Crash Type	Number of Crashes (2019-2023)	
	I/S #1	#2
From Opposite Direction	26	1
Rear-End	10	3
Enter at Angle	8	0
From Same Direction	4	0
Sideswipe	1	0
Vehicle Going Straight Hits Pedestrian	1	0
Vehicle Turning Right Hits Pedestrian	1	0

1. S Meridian & 15th Avenue: 51 collisions were recorded over the 5-year study timeframe, resulting in an average of 10.2 incidents per year. The collision types were listed as "from opposite direction" (26/51), followed by "rear-end" (10/51), "enter at angle" (8/51), "from same direction" (4/51), "sideswipe" (1/51), "vehicle going straight hits pedestrian" (1/51), and "vehicles turning right hits pedestrian" (1/51).

2. S Meridian & 17th Avenue: Four collisions were recorded over the 5-year study timeframe, resulting in an average of 0.8 incidents per year. The collision types were listed as "rear-end" (3/4), followed by "from opposite direction" (1/4).

Collision Severity, Contributing Factor Analysis & Trends

A collision severity summary associated with each study intersection is provided on the following page in **Table 4**. No fatalities were recorded.

Table 4: Collision History Severity

Number of Crashes (2019-2023)		
Crash Type	**#1**	**#2**
Fatal (K)	0	0
Incapacitating Injury (A)	1	0
Non-incapacitating Injury (B)	6	0
Possible Injury (C)	12	0
Property Damage Only (PDO)/Unknown	32	4

In review of overall trends, collisions were primarily property damage only and largely contributed to driver error/inattention. However, further assessment of Meridian and 15th Avenue was conducted.

S Meridian & 15th Avenue

A significant portion of collisions—26 out of 51—are opposite-direction incidents, accounting for half of all reported accidents. These collisions typically involve a left-turning vehicle and an oncoming vehicle going straight. These types of incidents often occur during the permissive phase of a left-turn at a signal. Further analysis reveals that over half of these incidents (15 out of 26) originated from the southbound direction, with six from the northbound, three from the eastbound, and two from the westbound approaches.

Lastly, two non-motorist incidents occurred and are described below

1. The first incident occurred in May of 2021 at around 11:40 PM when a northbound vehicle going straight struck a pedestrian. The driver is listed as under the influence of alcohol and the pedestrian is listed as disregard to traffic signals/signs. The incident resulted in suspected serious injury.
2. The second occurred in September of 2022 at around 9:00 PM when a vehicle turning right struck a pedestrian (from the west to the south). No driver or pedestrian contributing circumstances are listed. The collision resulted in suspected minor injury.

The City may consider further investigation or ongoing monitoring of this intersection to determine whether incident trends persist and to determine if modifications are necessary. Refer to **Figure 4** for the Collision History Location Map. Note that the segment related collisions shown on the figure were not included in the table totals above.

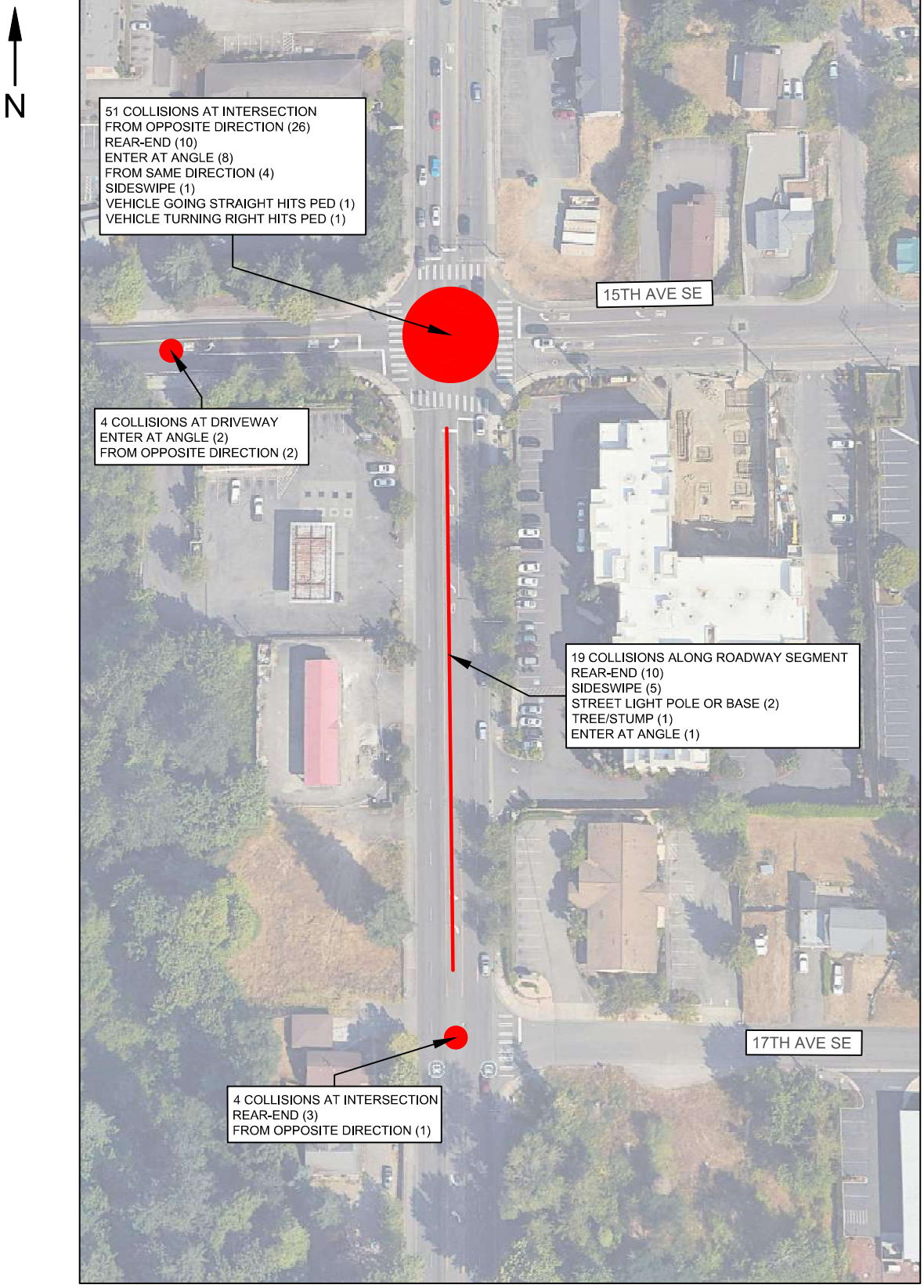

HEATH&ASSOCIATES
Transportation Planning & Engineering

SOUTH MERIDIAN MEDICAL

COLLISION HISTORY LOCATION MAP
FIGURE 4

4. FORECAST TRAFFIC DEMAND & ANALYSIS

4.1 Project Trip Generation

Trip generation is defined as the number of vehicle movements that enter or exit the respective project site during a designated time period, such as a specific peak hour (AM or PM) or an entire day. Trip generation estimates were derived from the Institute of Transportation Engineers (ITE) publication, *Trip Generation,* 11th Edition. Based on the scoping document for this project, Land Use Codes (LUC's) 710 – General Office Building (ITE Rates), LUC 720 Medical/Dental Office (ITE Equations), and LUC 930 – Fast Casual Restaurant (ITE Rates) were all applied.

Pass-by trips are characterized as motorists already passing by the site who decide to make an intermediate stop before proceeding to their primary destination. These trips are not considered as new trips but will impact the site's access point. A pass-by rate of 43% was applied to the restaurant portion of the project.

Table 5 below highlights the estimated number of trips to/from the proposed development. Refer to the appendix for ITE trip generation sheets and Jake Traffic Engineering's Scoping Letter.

Table 5: Project Trip Generation

Land Use	Size (sf)	AWDT	AM Peak-Hour Trips			PM Peak-Hour Trips		
			In	Out	Total	In	Out	Total
LUC 710 General Office	22,846	248	31	4	35	6	27	33
LUC 720 Med/Dental Office	19,029	710	43	11	54	22	52	74
LUC 930 Fast Casual Rest.	2,457	239	2	2	4	17	14	31
	Pass-By (43%)[4]	-103	-1	-1	-2	-6	-7	-13
Total Primary Trips		**1,094**	**75**	**16**	**91**	**39**	**86**	**125**

The project is estimated to generate 1,094 average weekday daily trips with 91 AM peak hour primary trips (75 inbound/16 outbound) and 125 PM peak hour primary trips (39 inbound / 86 outbound). An additional 2 AM and 7 PM peak hour pass-by trips are estimated.

[4] Based on the similar LUC 932 High-Turnover Sit-Down Restaurant

4.2 Distribution & Assignment

Trip distribution describes the process by which project generated trips are dispersed on the roadway network surrounding the site. Primary project traffic has been assigned with a 60%/40% north/south split along South Meridian. The trip distribution percentages are consistent with the approved scoping memo, which is attached to the appendix for reference. Pass-by trip distribution was estimated with a 50%/50% north/south split on South Meridian.

Refer to **Figures 5 and 6** for the peak hour trip distribution & assignment (primary and pass-by).

4.3 Future Peak Hour Volumes

A three-year horizon of 2028 was used to assess future conditions with project-buildout. Forecast 2028 peak hour background volumes were derived by applying a compound annual growth rate of 3.0 percent per year[5] to the existing volumes shown in **Figure 3**.

Forecast 2028 volumes without project is illustrated in **Figure 7**. Forecast 2028 volumes with project are illustrated in **Figure 8**.

[5] The 3% growth rate accounts for miscellaneous pipeline projects.

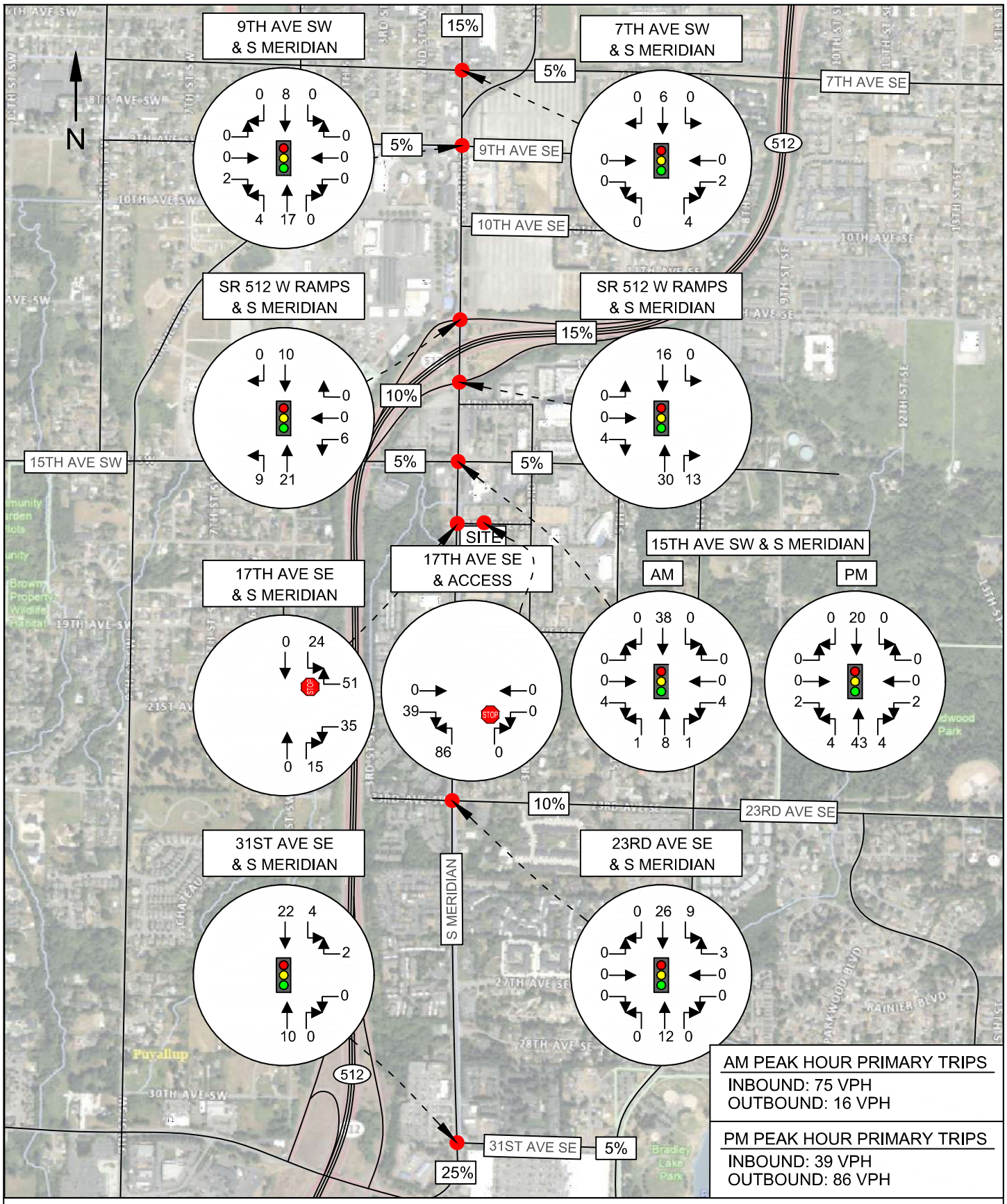

HEATH&ASSOCIATES
Transportation Planning & Engineering

SOUTH MERIDIAN MEDICAL

PEAK HOUR PRIMARY TRIP DISTRIBUTION & ASSIGNMENT
FIGURE 5

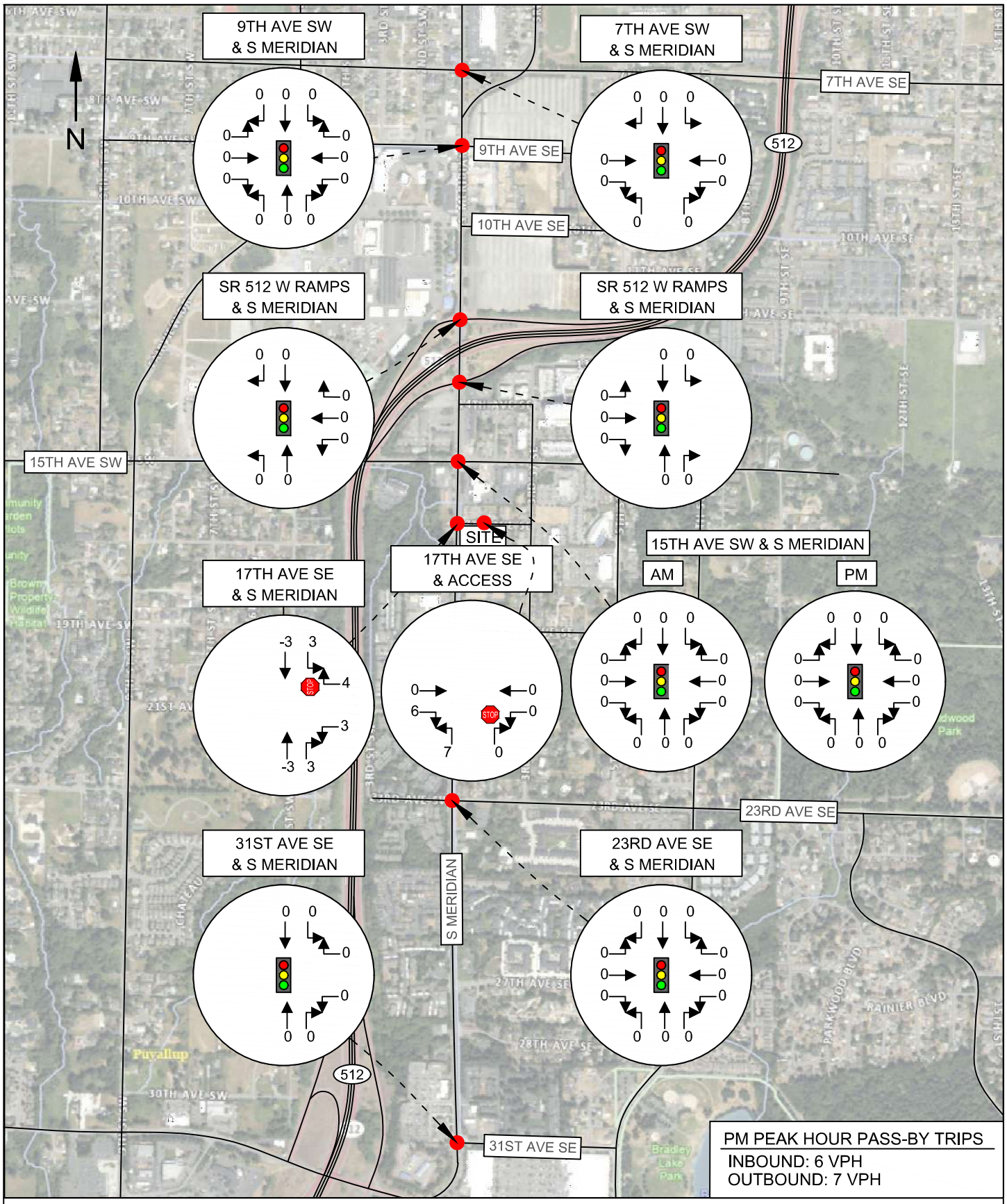

HEATH&ASSOCIATES
Transportation Planning & Engineering

SOUTH MERIDIAN MEDICAL

PEAK HOUR PASS-BY TRIP DISTRIBUTION & ASSIGNMENT
FIGURE 6

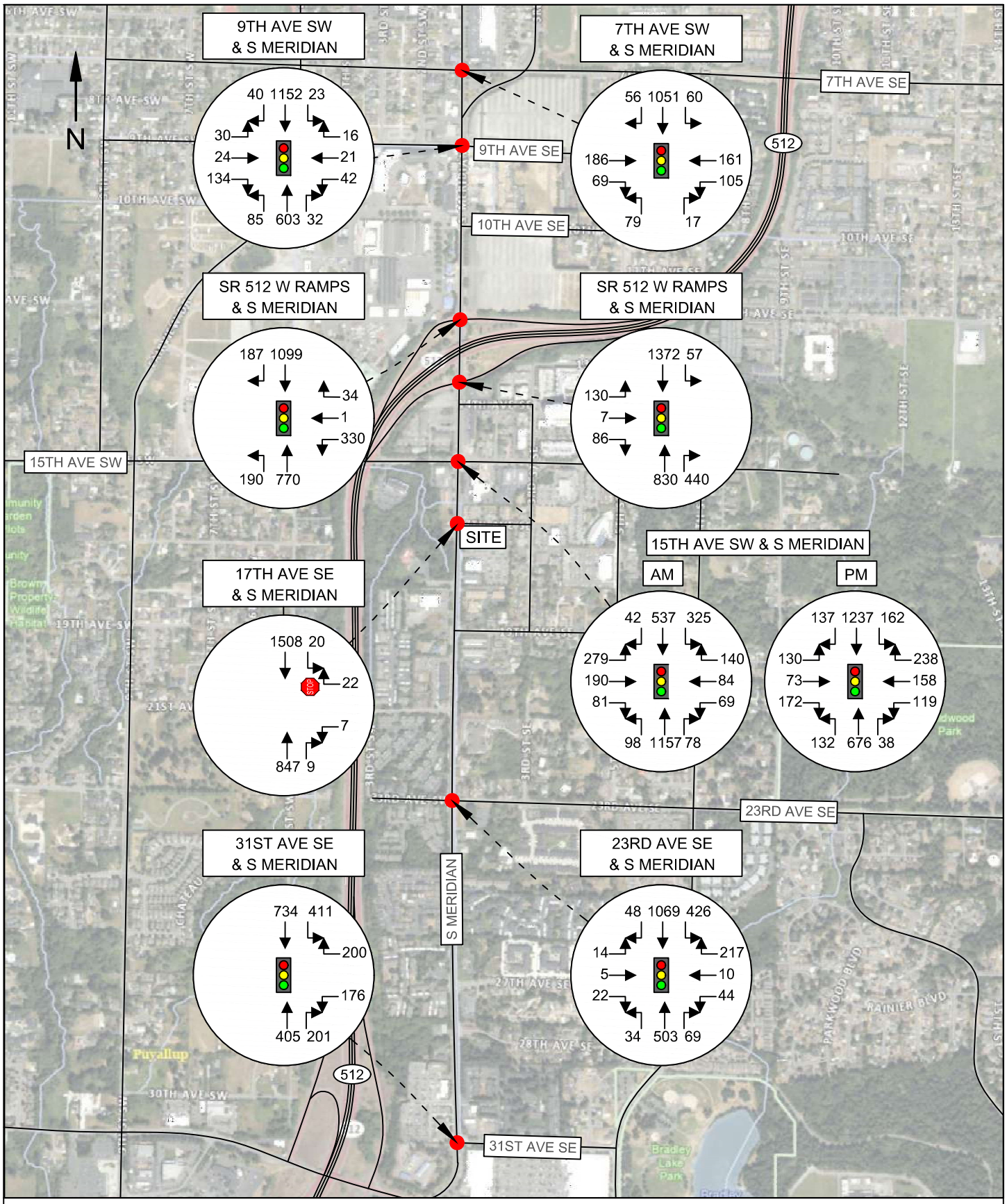

HEATH&ASSOCIATES
Transportation Planning & Engineering

SOUTH MERIDIAN MEDICAL

FORECAST 2028 PEAK HOUR VOLUMES WITHOUT PROJECT
FIGURE 7

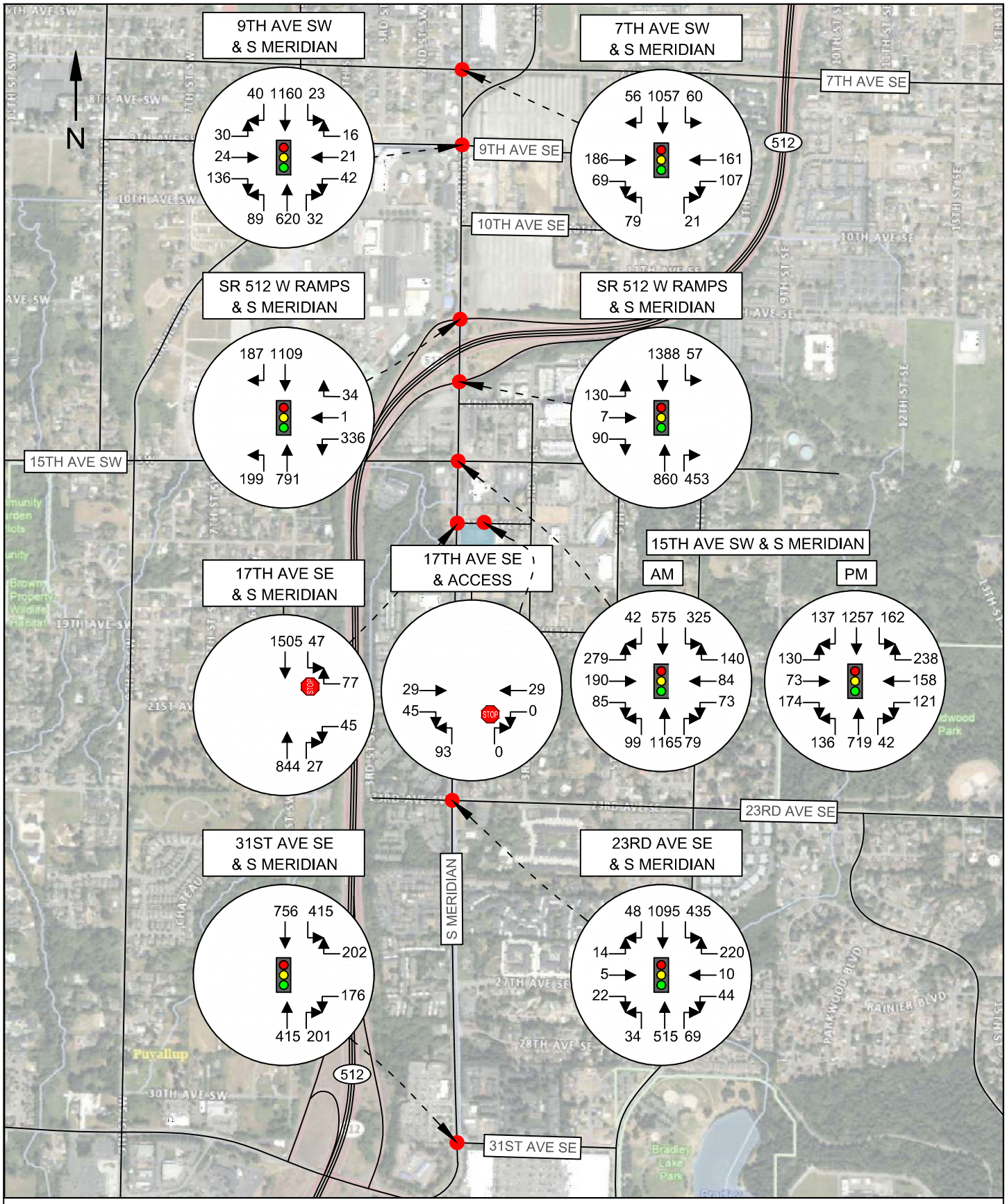

HEATH&ASSOCIATES
Transportation Planning & Engineering

SOUTH MERIDIAN MEDICAL

FORECAST 2028 PEAK HOUR VOLUMES WITH PROJECT
FIGURE 8

4.4 Future Level of Service

Level of service analyses were made of the future peak hour volumes without (background) and with project related trips added to the key roadways and intersections. This analysis once again involved the use of the *Synchro 12* analysis program. Delays for each study intersection under future 2028 conditions are shown below in **Table 6**.

Table 6: Forecast 2028 Peak Hour Level of Service

Delays given in Seconds Per Vehicle

			Without Project		*With Project*	
Intersection	**Peak-Hour**	**Critical Movement**	**LOS**	**Delay**	**LOS**	**Delay**
S Meridian & 7th Ave	PM	Overall	C	25.8	C	26.3
S Meridian & 9th Ave	PM	Overall	B	13.1	B	13.4
S Meridian & SR 512 WB Ramps	PM	Overall	B	16.8	B	17.3
S Meridian & SR 512 EB Ramps	PM	Overall	A	7.3	A	7.3
S Meridian & 15th Ave	AM PM	Overall/SB-L Overall	D/**F** C	45.6/**114.6** 33.0	D/**F** C	46.7/**118.4** 34.1
S Meridian & 17th Ave	PM	WB	B	14.5	C	21.6
S Meridian & 23rd Ave	PM	Overall	B	12.2	B	12.3
S Meridian & 31st Ave	PM	Overall	A	9.2	A	9.4
17th Ave SE & Access	PM	NB	--	--	A	9.4

Forecast 2028 peak hour level of service is estimated to maintain overall LOS D conditions or better and therefore continue to meet City of Puyallup's LOS D standards. While the southbound left-turn at S Meridian & 15th Avenue would continue to fail, the overall intersection maintains LOS D.

4.5 Access & Queuing

Access would be provided via a single driveway approach to 17th Avenue SE which would lead to a structured parking garage. The entrance approach is around 140 feet east of the stop bar at the S Meridian intersection. Under the forecast 2028 PM peak hour scenario with project traffic, the westbound queues are estimated at two vehicles. Therefore, no blockage or queue spillback to the garage entrance is expected. However, in the event queues or delays become excessive, drivers may opt to route to 3rd Street SE and use the signal at 15th Avenue SE to enter or exit Meridian.

5. CONCLUSIONS & MITIGATION

South Meridian Medical is a proposed mixed-use development consisting of over 40ksf of general and medical office space located in the City of Puyallup. The subject site is situated east of S Meridian and south of 17th Avenue SE within a single 0.79-acre parcel. Site ingress/egress is proposed via 17th Avenue SE. Counts were collected at eight study intersections to evaluate baseline Level of Service (LOS). Existing conditions within the study area operate at LOS D or better. However, in the AM peak hour, the southbound left-turn movement at the signalized intersection of S Meridian & 15th Avenue is failing. Despite this, the intersection operates at an overall LOS D. Lastly, this intersection had 51 reported collisions in the past five years –half of which involved left-turn vehicles colliding with a vehicle traveling straight in the opposite direction.

At buildout, the project is estimated to generate a net increase of 1,094 average weekday daily trips with 91 AM peak hour trips and 125 PM peak hour trips. A three-year horizon of 2028 was used to assess full-buildout conditions, including a 3.0 percent background growth rate. Forecast 2028 peak hour LOS is shown to continue to operate with LOS D conditions or better with or without the project traffic.

The project is subject to Traffic Impact Fees (TIF) per Puyallup Municipal Code Chapter 21.20.130. Initial estimates are $561,600 for the 124.8 PM peak hour trips ($4,500/trip). The exact TIF amount will be determined at the time of application for building permits and is subject to rates in effect at the time payment is made.

Please feel free to contact me should you have any questions.

Aaron Van Aken, P.E., PTOE

SOUTH MERIDIAN MEDICAL
TRAFFIC IMPACT ANALYSIS

APPENDIX

HEATH & ASSOCIATES
Transportation Planning & Engineering

Date Collected: 1/22/2025
Day of the Week: Wednesday
Time Period: 4:00 PM to 6:00 PM
Peak Hour: 4:00 PM to 5:00 PM

7th Ave SW & S Meridian

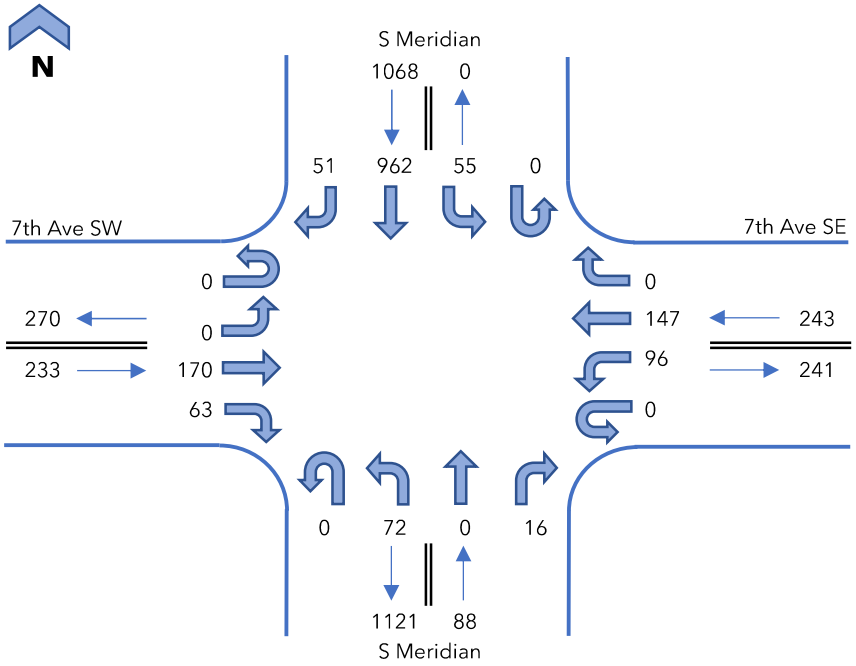

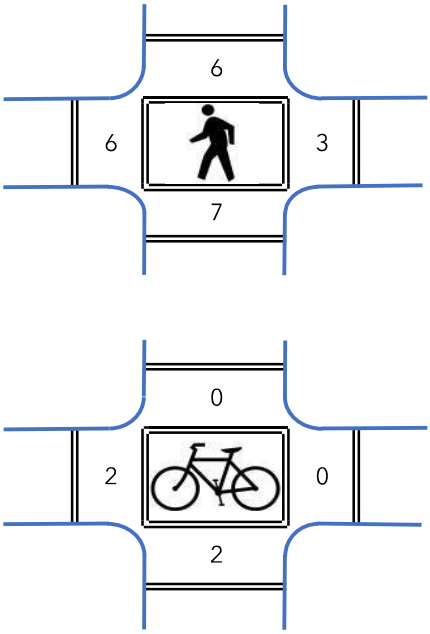

Interval Start Time	7th Ave SW Eastbound UT	LT	T	RT	7th Ave SE Westbound UT	LT	T	RT	S Meridian Northbound UT	LT	T	RT	S Meridian Southbound UT	LT	T	RT	15 Minute Totals	Hourly Totals
4:00 PM	0	0	50	21	0	29	40	0	0	19	0	3	0	12	247	9	430	
4:15 PM	0	0	59	9	0	12	43	0	0	22	0	7	0	14	232	20	418	
4:30 PM	0	0	27	19	0	35	32	0	0	18	0	2	0	20	244	12	409	
4:45 PM	0	0	34	14	0	20	32	0	0	13	0	4	0	9	239	10	375	1632
5:00 PM	0	0	45	22	0	27	43	0	0	22	0	5	0	14	226	14	418	1620
5:15 PM	0	0	41	20	0	7	25	0	0	23	0	3	0	9	258	16	402	1604
5:30 PM	0	0	35	17	0	9	33	0	0	23	0	2	0	12	199	15	345	1540
5:45 PM	0	0	29	13	0	12	31	0	0	16	0	3	0	15	259	15	393	1558
Count Total	0	0	320	135	0	151	279	0	0	156	0	29	0	105	1904	111	3190	--
Peak Hour Total	0	0	170	63	0	96	147	0	0	72	0	16	0	55	962	51	1632	--
PHF	0.82				0.88				0.76				0.97				0.95	--
Heavy Vehicles	0	0	3	1	0	2	2	0	0	0	0	0	0	0	11	0	19	--
HV %	0.0%	0.0%	1.8%	1.6%	0.0%	2.1%	1.4%	0.0%	0.0%	0.0%	0.0%	0.0%	0.0%	0.0%	1.1%	0.0%	1.2%	--

Interval Start Time	Heavy Vehicles EB	WB	NB	SB	Total
4:00 PM	1	0	0	2	3
4:15 PM	2	0	0	5	7
4:30 PM	1	3	0	2	6
4:45 PM	0	1	0	2	3
5:00 PM	0	0	0	2	2
5:15 PM	1	0	0	0	1
5:30 PM	1	0	0	1	2
5:45 PM	0	0	0	3	3
Count Total	6	4	0	17	27
Peak Hour Total	4	4	0	11	19
Peak Hour HV%	1.7%	1.6%	0.0%	1.0%	1.2%

Pedestrians (Leg) E	W	N	S	Total
1	2	2	3	8
1	0	2	3	6
0	3	1	0	4
1	1	1	1	4
0	0	2	1	3
0	1	0	0	1
2	0	2	0	4
0	2	0	1	3
5	9	10	9	33
3	6	6	7	22

Bicycles (Leg) E	W	N	S	Total
0	0	0	2	2
0	0	0	0	0
0	2	0	0	2
0	0	0	0	0
0	0	0	0	0
0	0	1	1	2
0	0	0	0	0
0	0	0	0	0
0	2	1	3	6
0	2	0	2	4

HEATH & ASSOCIATES
Transportation Planning & Engineering

Date Collected: 1/22/2025
Day of the Week: Wednesday
Time Period: 4:00 PM to 6:00 PM
Peak Hour: 4:00 PM to 5:00 PM

9th Ave SW & S Meridian

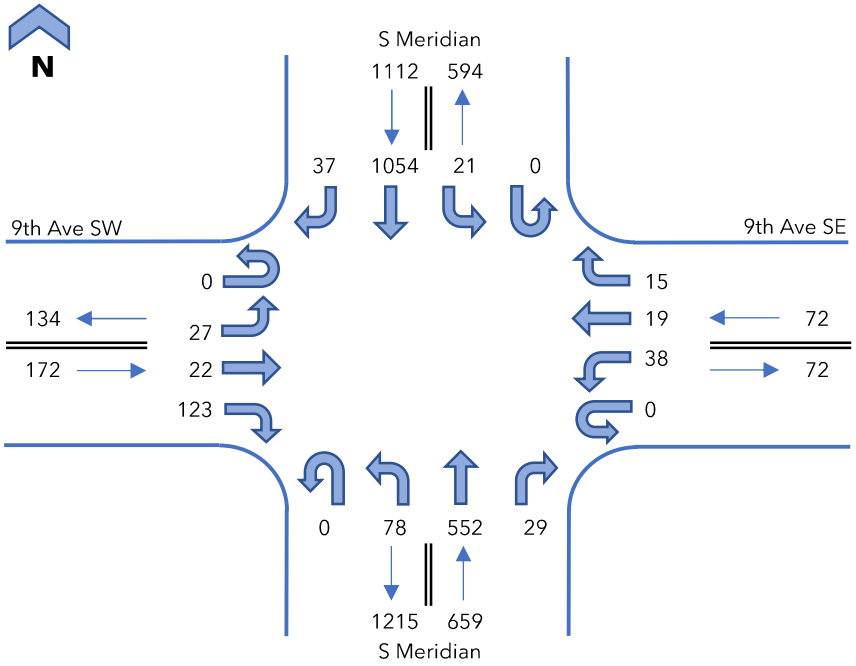

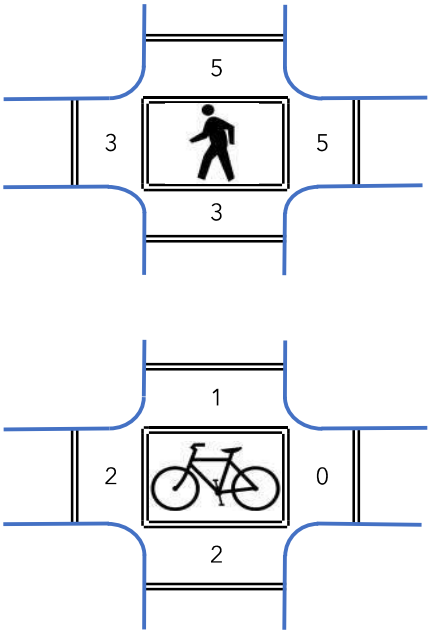

Interval Start Time	9th Ave SW Eastbound				9th Ave SE Westbound				S Meridian Northbound				S Meridian Southbound				15 Minute Totals	Hourly Totals
	UT	LT	T	RT	UT	LT	T	RT	UT	LT	T	RT	UT	LT	T	RT		
4:00 PM	0	5	8	30	0	8	4	6	0	19	131	7	0	4	282	6	510	
4:15 PM	0	13	7	24	0	12	5	1	0	12	154	11	0	4	241	11	495	
4:30 PM	0	7	5	35	0	8	3	5	0	25	121	6	0	8	272	13	508	
4:45 PM	0	2	2	34	0	10	7	3	0	22	146	5	0	5	259	7	502	2015
5:00 PM	0	9	8	35	0	9	0	5	0	14	148	3	0	7	258	7	503	2008
5:15 PM	0	8	2	18	0	8	0	2	0	27	138	2	0	7	267	15	494	2007
5:30 PM	0	7	4	19	0	3	4	4	0	35	110	10	0	9	214	10	429	1928
5:45 PM	0	4	9	15	0	5	6	2	0	20	132	7	0	5	267	9	481	1907
Count Total	0	55	45	210	0	63	29	28	0	174	1080	51	0	49	2060	78	3922	--
Peak Hour Total	0	27	22	123	0	38	19	15	0	78	552	29	0	21	1054	37	2015	--
PHF	0.91				0.90				0.93				0.95				0.99	--
Heavy Vehicles	0	0	0	1	0	0	0	0	0	2	7	0	0	0	10	0	20	--
HV %	0.0%	0.0%	0.0%	0.8%	0.0%	0.0%	0.0%	0.0%	0.0%	2.6%	1.3%	0.0%	0.0%	0.0%	0.9%	0.0%	1.0%	--

Interval Start Time	Heavy Vehicles				
	EB	WB	NB	SB	Total
4:00 PM	1	0	1	2	4
4:15 PM	0	0	5	4	9
4:30 PM	0	0	2	2	4
4:45 PM	0	0	1	2	3
5:00 PM	0	0	1	2	3
5:15 PM	0	0	1	1	2
5:30 PM	0	0	2	1	3
5:45 PM	0	0	1	1	2
Count Total	1	0	14	15	30
Peak Hour Total	1	0	9	10	20
Peak Hour HV%	0.6%	0.0%	1.4%	0.9%	1.0%

Pedestrians (Leg)				
E	W	N	S	Total
0	2	1	0	3
1	0	1	2	4
4	1	2	1	8
0	0	1	0	1
0	1	2	1	4
0	0	1	0	1
0	0	1	0	1
0	2	0	0	2
5	6	9	4	24
5	3	5	3	16

Bicycles (Leg)				
E	W	N	S	Total
0	0	1	2	3
0	2	0	0	2
0	0	0	0	0
0	0	0	0	0
0	0	0	0	0
0	0	1	0	1
0	0	0	0	0
0	0	0	0	0
0	2	2	2	6
0	2	1	2	5

HEATH & ASSOCIATES
Transportation Planning & Engineering

Date Collected: 1/22/2025
Day of the Week: Wednesday
Time Period: 4:00 PM to 6:00 PM
Peak Hour: 4:15 PM to 5:15 PM

SR 512 W Ramps & S Meridian

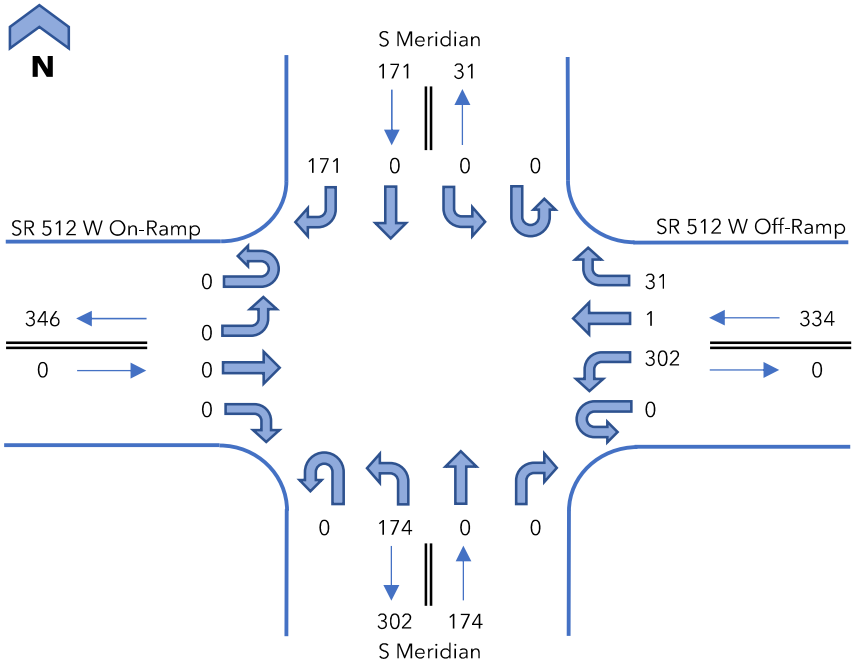

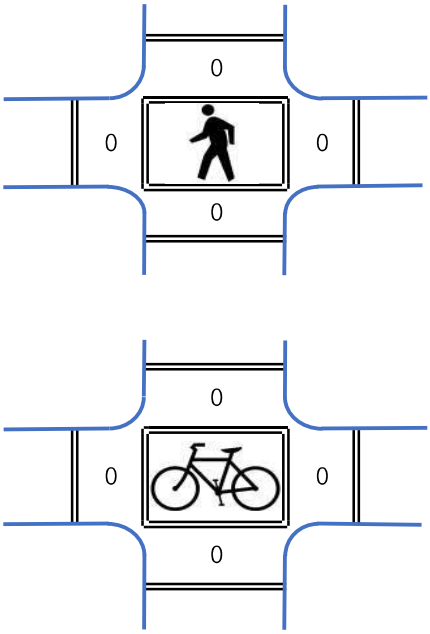

Interval Start Time	SR 512 W On-Ramp Eastbound				SR 512 W Off-Ramp Westbound				S Meridian Northbound				S Meridian Southbound				15 Minute Totals	Hourly Totals
	UT	LT	T	RT	UT	LT	T	RT	UT	LT	T	RT	UT	LT	T	RT		
4:00 PM	0	0	0	0	0	61	1	6	0	34	0	0	0	0	0	60	162	
4:15 PM	0	0	0	0	0	86	0	12	0	50	0	0	0	0	0	49	197	
4:30 PM	0	0	0	0	0	68	0	6	0	49	0	0	0	0	0	39	162	
4:45 PM	0	0	0	0	0	74	0	5	0	35	0	0	0	0	0	38	152	673
5:00 PM	0	0	0	0	0	74	1	8	0	40	0	0	0	0	0	45	168	679
5:15 PM	0	0	0	0	0	80	0	12	0	15	0	0	0	0	0	30	137	619
5:30 PM	0	0	0	0	0	60	0	2	0	22	0	0	0	0	0	33	117	574
5:45 PM	0	0	0	0	0	85	0	7	0	19	0	0	0	0	0	38	149	571
Count Total	0	0	0	0	0	588	2	58	0	264	0	0	0	0	0	332	1244	--
Peak Hour Total	0	0	0	0	0	302	1	31	0	174	0	0	0	0	0	171	679	--
PHF	#DIV/0!				0.85				0.87				0.87				0.86	--
Heavy Vehicles	0	0	0	0	0	1	0	0	0	3	0	0	0	0	0	4	8	--
HV %	0.0%	0.0%	0.0%	0.0%	0.0%	0.3%	0.0%	0.0%	0.0%	1.7%	0.0%	0.0%	0.0%	0.0%	0.0%	2.3%	1.2%	--

Interval Start Time	Heavy Vehicles				
	EB	WB	NB	SB	Total
4:00 PM	0	1	1	1	3
4:15 PM	0	1	1	2	4
4:30 PM	0	0	2	1	3
4:45 PM	0	0	0	1	1
5:00 PM	0	0	0	0	0
5:15 PM	0	1	0	1	2
5:30 PM	0	1	0	0	1
5:45 PM	0	1	0	0	1
Count Total	0	5	4	6	15
Peak Hour Total	0	1	3	4	8
Peak Hour HV%	#DIV/0!	0.3%	1.7%	2.3%	1.2%

Pedestrians (Leg)				
E	W	N	S	Total
0	0	0	1	1
0	0	0	0	0
0	0	0	0	0
0	0	0	0	0
0	0	0	0	0
0	0	0	0	0
0	0	0	0	0
0	0	0	0	0
0	0	0	1	1
0	0	0	0	0

Bicycles (Leg)				
E	W	N	S	Total
0	0	0	0	0
0	0	0	0	0
0	0	0	0	0
0	0	0	0	0
0	0	0	0	0
0	0	0	0	0
0	0	0	0	0
0	0	0	0	0
0	0	0	0	0
0	0	0	0	0

HEATH & ASSOCIATES
Transportation Planning & Engineering

Date Collected: 1/22/2025
Day of the Week: Wednesday
Time Period: 4:00 PM to 6:00 PM
Peak Hour: 4:00 PM to 5:00 PM

SR 512 E Ramps & S Meridian

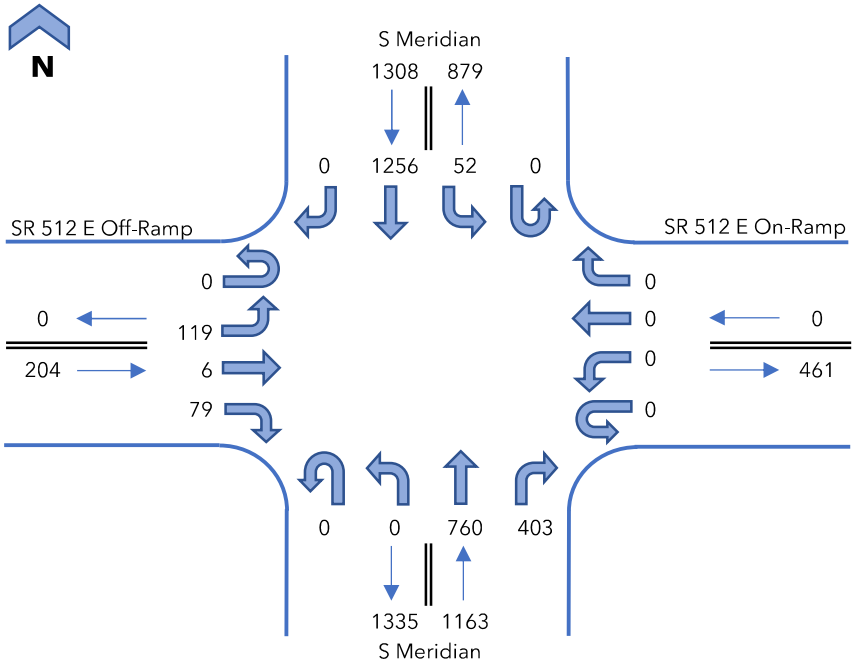

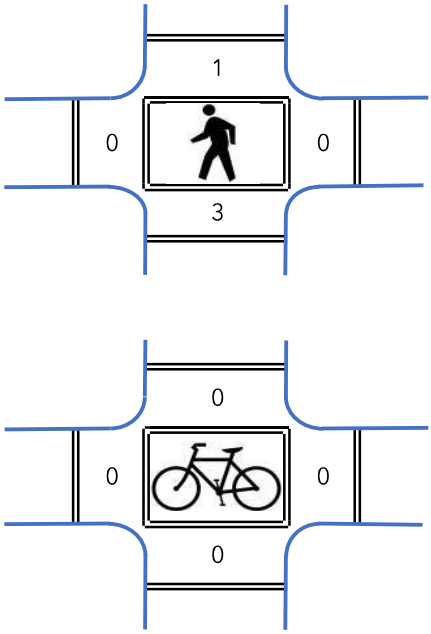

Interval Start Time	SR 512 E Off-Ramp Eastbound				SR 512 E On-Ramp Westbound				S Meridian Northbound				S Meridian Southbound				15 Minute Totals	Hourly Totals
	UT	LT	T	RT	UT	LT	T	RT	UT	LT	T	RT	UT	LT	T	RT		
4:00 PM	0	31	0	23	0	0	0	0	0	0	191	98	0	11	316	0	670	
4:15 PM	0	30	0	14	0	0	0	0	0	0	196	107	0	9	310	0	666	
4:30 PM	0	22	3	26	0	0	0	0	0	0	196	111	0	21	324	0	703	
4:45 PM	0	36	3	16	0	0	0	0	0	0	177	87	0	11	306	0	636	2675
5:00 PM	0	21	0	15	0	0	0	0	0	0	196	85	0	17	326	0	660	2665
5:15 PM	0	28	1	14	0	0	0	0	0	0	152	97	0	15	338	0	645	2644
5:30 PM	0	35	1	20	0	0	0	0	0	0	141	79	0	21	276	0	573	2514
5:45 PM	1	32	3	18	0	0	0	0	0	0	136	73	0	16	301	0	580	2458
Count Total	1	235	11	146	0	0	0	0	0	0	1385	737	0	121	2497	0	5133	--
Peak Hour Total	0	119	6	79	0	0	0	0	0	0	760	403	0	52	1256	0	2675	--
PHF	0.93				#DIV/0!				0.95				0.95				0.95	--
Heavy Vehicles	0	0	0	1	0	0	0	0	0	0	18	2	0	1	8	0	30	--
HV %	0.0%	0.0%	0.0%	1.3%	0.0%	0.0%	0.0%	0.0%	0.0%	0.0%	2.4%	0.5%	0.0%	1.9%	0.6%	0.0%	1.1%	--

Interval Start Time	Heavy Vehicles				
	EB	WB	NB	SB	Total
4:00 PM	1	0	2	3	6
4:15 PM	0	0	9	4	13
4:30 PM	0	0	7	1	8
4:45 PM	0	0	2	1	3
5:00 PM	1	0	0	2	3
5:15 PM	0	0	1	0	1
5:30 PM	1	0	2	1	4
5:45 PM	1	0	1	2	4
Count Total	4	0	24	14	42
Peak Hour Total	1	0	20	9	30
Peak Hour HV%	0.5%	#DIV/0!	1.7%	0.7%	1.1%

Pedestrians (Leg)				
E	W	N	S	Total
0	0	0	1	1
0	0	0	2	2
0	0	1	0	1
0	0	0	0	0
0	0	0	0	0
0	0	0	0	0
0	1	0	0	1
0	0	0	0	0
0	1	1	3	5
0	0	1	3	4

Bicycles (Leg)				
E	W	N	S	Total
0	0	0	0	0
0	0	0	0	0
0	0	0	0	0
0	0	0	0	0
0	0	0	0	0
0	0	0	0	0
0	0	0	0	0
0	0	0	0	0
0	0	0	0	0
0	0	0	0	0

HEATH & ASSOCIATES
Transportation Planning & Engineering

Date Collected: 1/22/2025
Day of the Week: Wednesday
Time Period: 7:00 AM to 9:00 AM
Peak Hour: 7:15 AM to 8:15 AM

15th Ave SW & S Meridian

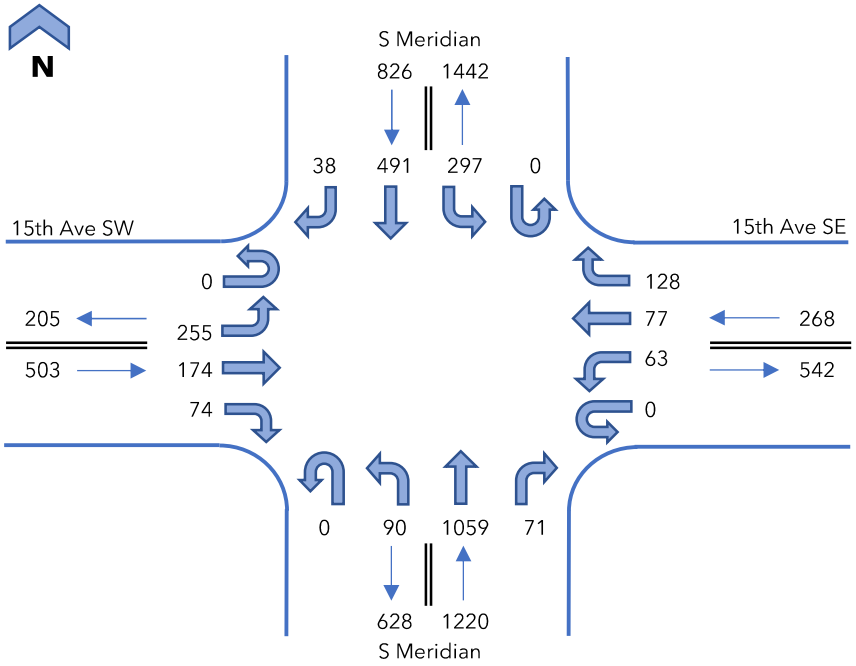

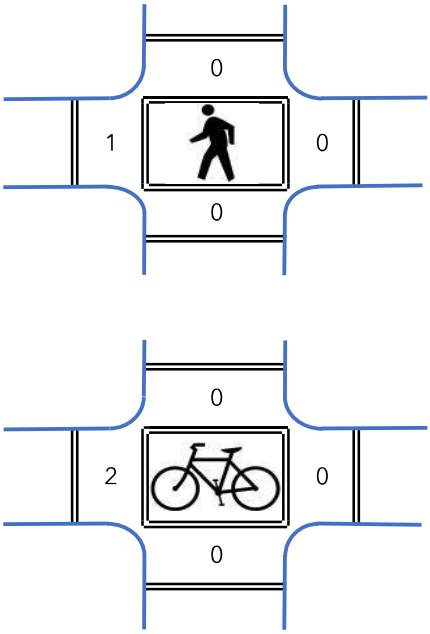

Interval Start Time	15th Ave SW Eastbound				15th Ave SE Westbound				S Meridian Northbound				S Meridian Southbound				15 Minute Totals	Hourly Totals
	UT	LT	T	RT	UT	LT	T	RT	UT	LT	T	RT	UT	LT	T	RT		
7:00 AM	0	83	33	8	0	16	12	23	0	27	310	14	0	42	63	6	637	
7:15 AM	0	69	40	14	0	9	9	27	0	24	265	6	0	76	100	9	648	
7:30 AM	0	73	48	15	0	21	25	41	0	14	271	20	0	69	112	9	718	
7:45 AM	0	62	43	28	0	22	17	37	0	21	293	18	0	63	131	11	746	2749
8:00 AM	0	51	43	17	0	11	26	23	0	31	230	27	0	89	148	9	705	2817
8:15 AM	0	35	34	14	0	15	18	30	0	24	199	19	0	85	126	10	609	2778
8:30 AM	0	36	26	24	0	22	15	27	0	21	157	12	0	78	152	13	583	2643
8:45 AM	0	28	28	25	0	20	14	37	0	28	148	23	0	87	126	11	575	2472
Count Total	0	437	295	145	0	136	136	245	0	190	1873	139	0	589	958	78	5221	--
Peak Hour Total	0	255	174	74	0	63	77	128	0	90	1059	71	0	297	491	38	2817	--
PHF	0.92				0.77				0.92				0.84				0.94	--
Heavy Vehicles	0	6	0	1	0	0	1	3	0	4	22	1	0	6	8	3	55	--
HV %	0.0%	2.4%	0.0%	1.4%	0.0%	0.0%	1.3%	2.3%	0.0%	4.4%	2.1%	1.4%	0.0%	2.0%	1.6%	7.9%	2.0%	--

Interval Start Time	Heavy Vehicles				
	EB	WB	NB	SB	Total
7:00 AM	3	0	12	2	17
7:15 AM	0	2	4	2	8
7:30 AM	1	1	7	4	13
7:45 AM	3	1	8	7	19
8:00 AM	3	0	8	4	15
8:15 AM	1	0	8	11	20
8:30 AM	0	4	5	11	20
8:45 AM	5	1	7	6	19
Count Total	16	9	59	47	131
Peak Hour Total	7	4	27	17	55
Peak Hour HV%	1.4%	1.5%	2.2%	2.1%	2.0%

Pedestrians (Leg)				
E	W	N	S	Total
0	0	0	0	0
0	0	0	0	0
0	1	0	0	1
0	0	0	0	0
0	0	0	0	0
0	0	0	1	1
0	0	0	1	1
0	2	0	0	2
0	3	0	2	5
0	1	0	0	1

Bicycles (Leg)				
E	W	N	S	Total
0	0	0	0	0
0	0	0	0	0
0	0	0	0	0
0	0	0	0	0
0	2	0	0	2
0	0	0	0	0
0	0	0	0	0
0	0	0	0	0
0	2	0	0	2
0	2	0	0	2

HEATH & ASSOCIATES
Transportation Planning & Engineering

Date Collected: 1/22/2025
Day of the Week: Wednesday
Time Period: 4:00 PM to 6:00 PM
Peak Hour: 4:30 PM to 5:30 PM

15th Ave SW & S Meridian

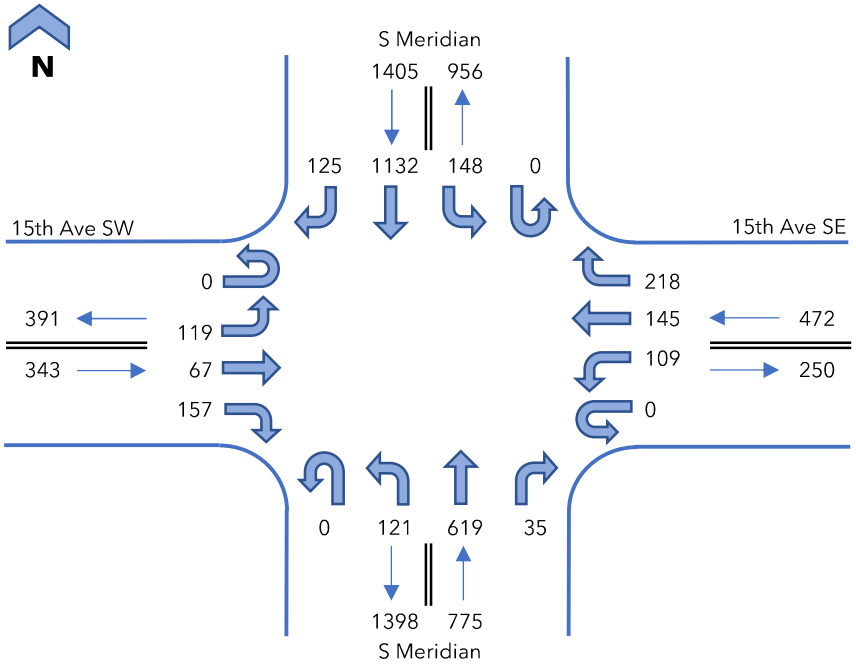

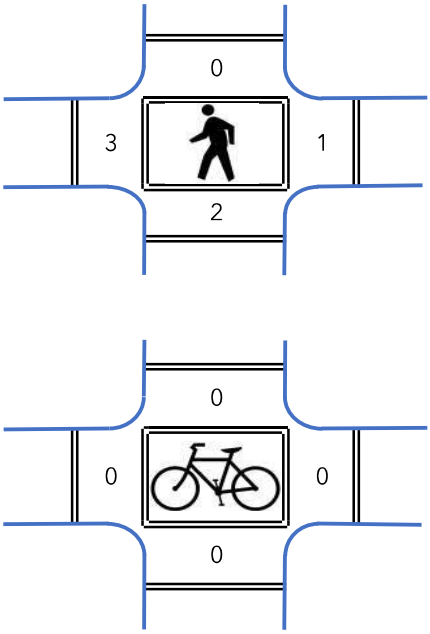

Interval Start Time	15th Ave SW Eastbound				15th Ave SE Westbound				S Meridian Northbound				S Meridian Southbound				15 Minute Totals	Hourly Totals
	UT	LT	T	RT	UT	LT	T	RT	UT	LT	T	RT	UT	LT	T	RT		
4:00 PM	0	25	22	25	0	27	41	60	0	32	166	8	0	43	276	34	759	
4:15 PM	0	30	16	41	0	30	37	70	0	28	154	16	0	41	242	28	733	
4:30 PM	0	27	19	31	0	32	39	72	0	38	168	8	0	36	316	25	811	
4:45 PM	0	31	18	30	0	33	32	53	0	25	139	12	0	46	238	30	687	2990
5:00 PM	0	26	15	43	0	22	35	58	0	25	167	6	0	26	299	29	751	2982
5:15 PM	0	35	15	53	0	22	39	35	0	33	145	9	0	40	279	41	746	2995
5:30 PM	0	21	15	42	0	20	33	40	0	26	127	3	0	22	244	31	624	2808
5:45 PM	0	19	15	18	0	27	24	34	0	20	119	9	0	41	254	35	615	2736
Count Total	0	214	135	283	0	213	280	422	0	227	1185	71	0	295	2148	253	5726	--
Peak Hour Total	0	119	67	157	0	109	145	218	0	121	619	35	0	148	1132	125	2995	--
PHF	0.83				0.83				0.91				0.93				0.92	--
Heavy Vehicles	0	0	0	0	0	0	0	0	0	0	8	1	0	0	7	0	16	--
HV %	0.0%	0.0%	0.0%	0.0%	0.0%	0.0%	0.0%	0.0%	0.0%	0.0%	1.3%	2.9%	0.0%	0.0%	0.6%	0.0%	0.5%	--

Interval Start Time	Heavy Vehicles				
	EB	WB	NB	SB	Total
4:00 PM	1	1	6	6	14
4:15 PM	0	1	6	3	10
4:30 PM	0	0	4	2	6
4:45 PM	0	0	3	1	4
5:00 PM	0	0	0	2	2
5:15 PM	0	0	2	2	4
5:30 PM	1	0	2	2	5
5:45 PM	0	0	1	4	5
Count Total	2	2	24	22	50
Peak Hour Total	0	0	9	7	16
Peak Hour HV%	0.0%	0.0%	1.2%	0.5%	0.5%

Pedestrians (Leg)				
E	W	N	S	Total
2	0	0	0	2
0	0	1	2	3
0	1	0	1	2
0	0	0	1	1
1	1	0	0	2
0	1	0	0	1
2	0	0	1	3
0	1	1	1	3
5	4	2	6	17
1	3	0	2	6

Bicycles (Leg)				
E	W	N	S	Total
0	0	0	0	0
0	0	0	0	0
0	0	0	0	0
0	0	0	0	0
0	0	0	0	0
0	0	0	0	0
0	0	0	0	0
0	0	0	0	0
0	0	0	0	0
0	0	0	0	0

HEATH&ASSOCIATES
Transportation Planning & Engineering

Date Collected: 1/22/2025
Day of the Week: Wednesday
Time Period: 4:00 PM to 6:00 PM
Peak Hour: 4:00 PM to 5:00 PM

17th Ave SE & S Meridian

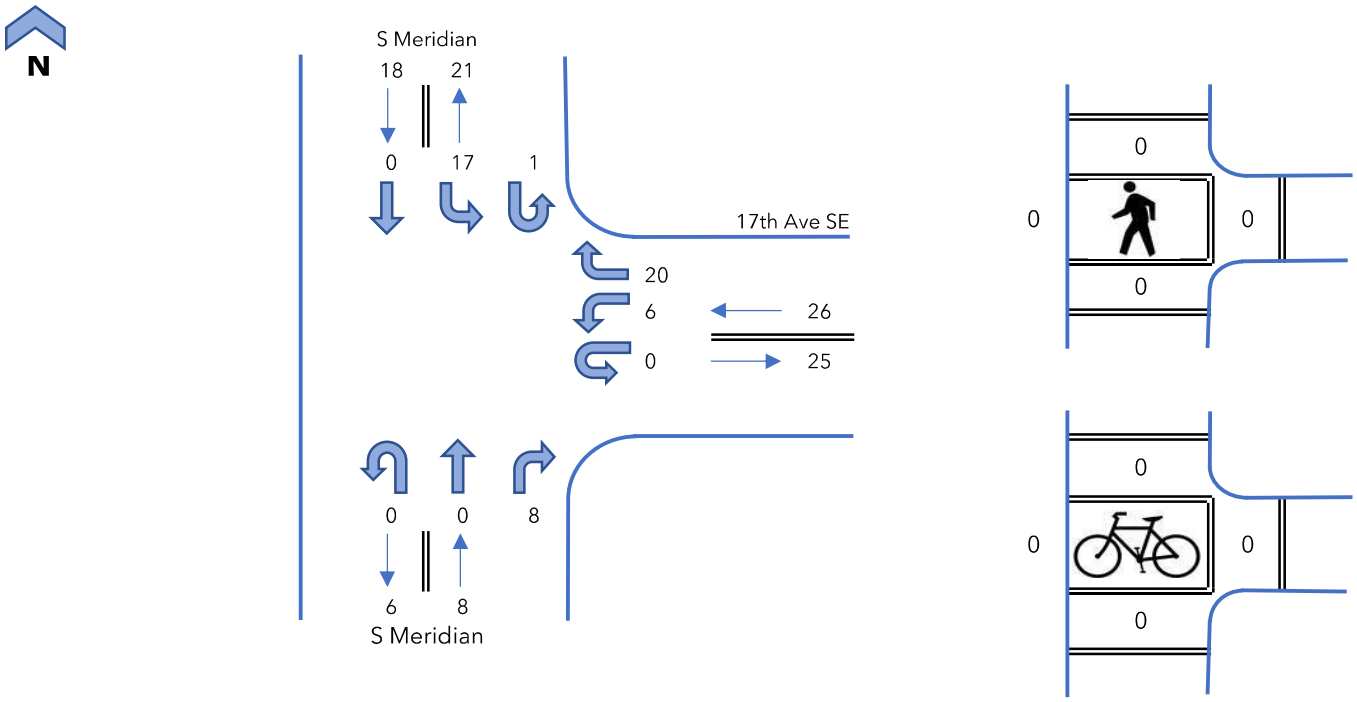

Interval Start Time					17th Ave SE Westbound				S Meridian Northbound				S Meridian Southbound				15 Minute Totals	Hourly Totals
					UT	LT	T	RT	UT	LT	T	RT	UT	LT	T	RT		
4:00 PM	--	--	--	--	0	2	--	4	0	--	0	1	1	5	0	--	13	
4:15 PM	--	--	--	--	0	0	--	5	0	--	0	1	1	5	0	--	12	
4:30 PM	--	--	--	--	0	4	--	7	0	--	0	5	0	3	0	--	19	
4:45 PM	--	--	--	--	0	0	--	4	0	--	0	1	0	4	0	--	9	53
5:00 PM	--	--	--	--	0	2	--	6	0	--	0	1	0	0	0	--	9	49
5:15 PM	--	--	--	--	0	2	--	6	0	--	0	1	1	2	0	--	12	49
5:30 PM	--	--	--	--	0	0	--	7	0	--	0	2	1	2	0	--	12	42
5:45 PM	--	--	--	--	0	0	--	2	0	--	0	3	0	1	0	--	6	39
Count Total	--	--	--	--	0	10	--	41	0	--	0	15	4	22	0	--	92	--
Peak Hour Total	--	--	--	--	0	6	--	20	0	--	0	8	2	17	0	--	53	--
PHF	--				0.59				0.40				0.79				0.70	--
Heavy Vehicles	--	--	--	--	0	0	--	2	0	--	0	0	0	0	0	--	2	--
HV %	--	--	--	--	0.0%	0.0%	--	10.0%	0.0%	--	0.0%	0.0%	0.0%	0.0%	0.0%	--	3.8%	--

Interval Start Time	Heavy Vehicles				
	EB	WB	NB	SB	Total
4:00 PM	--	1	0	0	1
4:15 PM	--	1	0	0	1
4:30 PM	--	0	0	0	0
4:45 PM	--	0	0	0	0
5:00 PM	--	0	0	0	0
5:15 PM	--	0	0	0	0
5:30 PM	--	0	0	0	0
5:45 PM	--	0	0	0	0
Count Total	--	2	0	0	2
Peak Hour Total	--	2	0	0	2
Peak Hour HV%	--	7.7%	0.0%	0.0%	3.8%

Pedestrians (Leg)				
E	W	N	S	Total
0	0	0	0	0
0	0	0	0	0
0	0	0	0	0
0	0	0	0	0
0	0	0	0	0
0	0	0	0	0
0	0	0	0	0
0	0	0	0	0
0	0	0	0	0
0	0	0	0	0

Bicycles (Leg)				
E	W	N	S	Total
0	0	0	0	0
0	0	0	0	0
0	0	0	0	0
0	0	0	0	0
0	0	0	0	0
0	0	0	0	0
0	0	0	0	0
0	0	0	0	0
0	0	0	0	0
0	0	0	0	0

HEATH & ASSOCIATES
Transportation Planning & Engineering

Date Collected: 1/22/2025
Day of the Week: Wednesday
Time Period: 4:00 PM to 6:00 PM
Peak Hour: 4:30 PM to 5:30 PM

23rd Ave SW & S Meridian

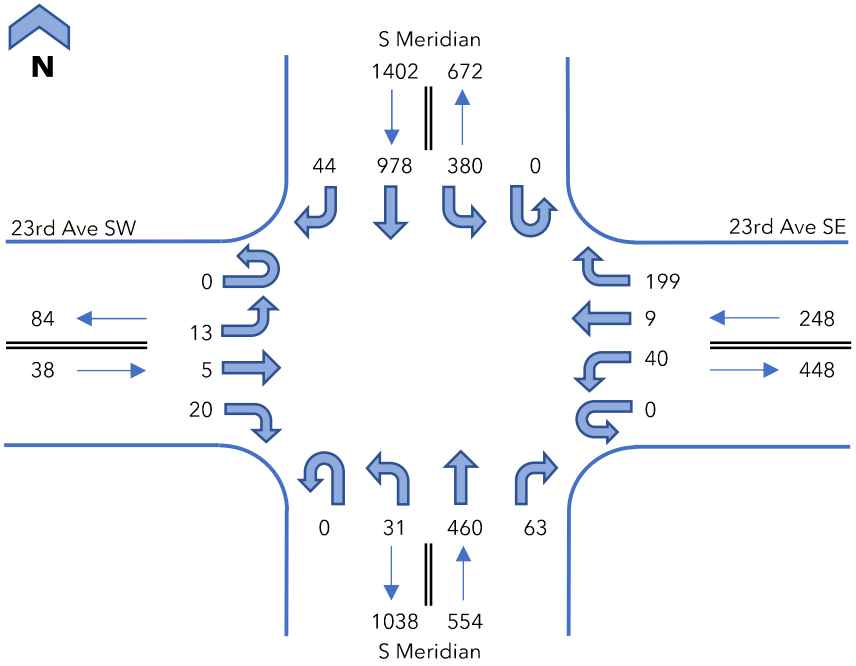

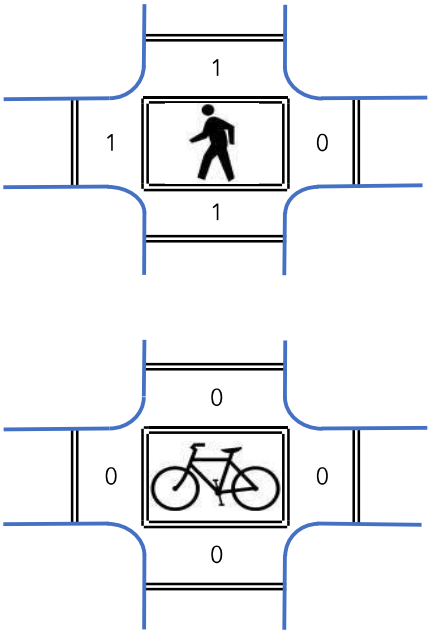

Interval Start Time	23rd Ave SW Eastbound				23rd Ave SE Westbound				S Meridian Northbound				S Meridian Southbound				15 Minute Totals	Hourly Totals
	UT	LT	T	RT	UT	LT	T	RT	UT	LT	T	RT	UT	LT	T	RT		
4:00 PM	0	4	1	4	0	15	7	47	0	4	108	22	0	91	219	7	529	
4:15 PM	0	2	0	5	0	13	1	46	0	8	129	16	0	77	240	8	545	
4:30 PM	0	6	1	4	0	10	0	55	0	11	121	16	0	99	245	9	577	
4:45 PM	0	3	2	3	0	14	3	38	0	6	109	18	0	82	248	9	535	2186
5:00 PM	0	4	1	7	0	13	4	53	0	7	108	16	0	93	256	17	579	2236
5:15 PM	0	0	1	6	0	3	2	53	0	7	122	13	0	106	229	9	551	2242
5:30 PM	0	5	0	2	0	10	1	37	0	10	113	13	0	73	218	4	486	2151
5:45 PM	0	3	2	5	0	11	6	44	0	7	93	16	0	73	211	6	477	2093
Count Total	0	27	8	36	0	89	24	373	0	60	903	130	0	694	1866	69	4279	--
Peak Hour Total	0	13	5	20	0	40	9	199	0	31	460	63	0	380	978	44	2242	--
PHF	0.79				0.89				0.94				0.96				0.97	--
Heavy Vehicles	0	0	0	1	0	0	0	2	0	1	4	0	0	1	4	0	13	--
HV %	0.0%	0.0%	0.0%	5.0%	0.0%	0.0%	0.0%	1.0%	0.0%	3.2%	0.9%	0.0%	0.0%	0.3%	0.4%	0.0%	0.6%	--

Interval Start Time	Heavy Vehicles				
	EB	WB	NB	SB	Total
4:00 PM	1	4	2	4	11
4:15 PM	0	1	4	2	7
4:30 PM	0	2	2	1	5
4:45 PM	1	0	2	2	5
5:00 PM	0	0	0	2	2
5:15 PM	0	0	1	0	1
5:30 PM	0	1	3	1	5
5:45 PM	1	0	1	2	4
Count Total	3	8	15	14	40
Peak Hour Total	1	2	5	5	13
Peak Hour HV%	2.6%	0.8%	0.9%	0.4%	0.6%

Pedestrians (Leg)				
E	W	N	S	Total
0	0	0	1	1
0	0	3	2	5
0	1	1	0	2
0	0	0	0	0
0	0	0	0	0
0	0	0	1	1
0	0	1	0	1
1	0	1	0	2
1	1	6	4	12
0	1	1	1	3

Bicycles (Leg)				
E	W	N	S	Total
0	0	0	0	0
0	0	0	0	0
0	0	0	0	0
0	0	0	0	0
0	0	0	0	0
0	0	0	0	0
0	0	0	0	0
0	0	0	0	0
0	0	0	0	0
0	0	0	0	0

HEATH & ASSOCIATES
Transportation Planning & Engineering

Date Collected: 1/22/2025
Day of the Week: Wednesday
Time Period: 4:00 PM to 6:00 PM
Peak Hour: 4:00 PM to 5:00 PM

31st Ave SE & S Meridian

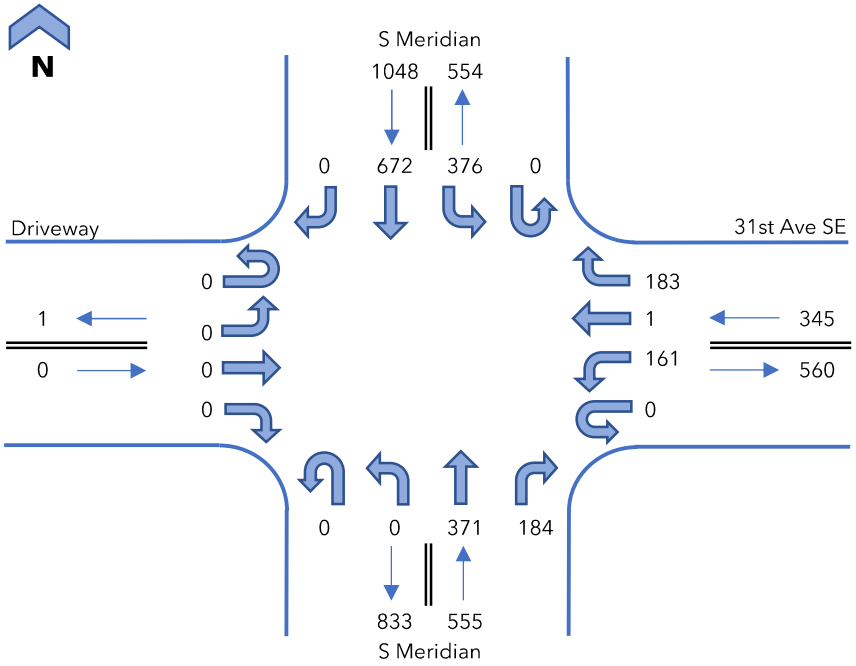

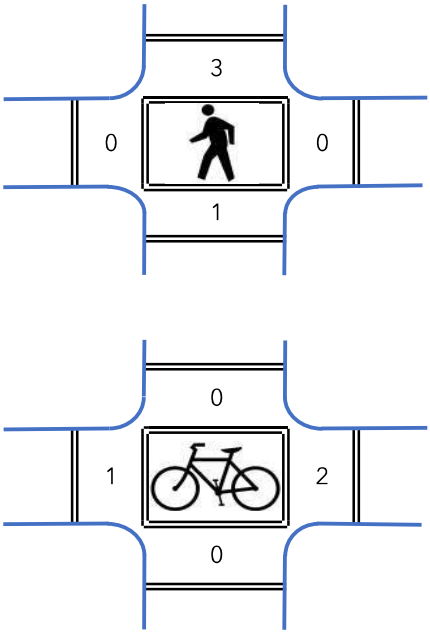

Interval Start Time	Driveway Eastbound				31st Ave SE Westbound				S Meridian Northbound				S Meridian Southbound				15 Minute Totals	Hourly Totals
	UT	LT	T	RT	UT	LT	T	RT	UT	LT	T	RT	UT	LT	T	RT		
4:00 PM	0	0	0	0	0	52	0	57	0	0	93	46	0	84	163	0	495	
4:15 PM	0	0	0	0	0	45	0	47	0	0	111	48	0	92	165	0	508	
4:30 PM	0	0	0	0	0	31	0	47	0	0	80	49	0	93	189	0	489	
4:45 PM	0	0	0	0	0	33	1	32	0	0	87	41	0	107	155	0	456	1948
5:00 PM	0	0	0	0	0	37	0	47	0	0	81	45	0	91	183	0	484	1937
5:15 PM	0	0	0	0	0	35	0	40	0	0	103	31	0	102	142	0	453	1882
5:30 PM	0	0	0	0	0	33	0	43	0	0	95	49	0	94	141	0	455	1848
5:45 PM	0	0	0	0	0	38	1	50	0	0	82	44	0	87	137	0	439	1831
Count Total	0	0	0	0	0	304	2	363	0	0	732	353	0	750	1275	0	3779	--
Peak Hour Total	0	0	0	0	0	161	1	183	0	0	371	184	0	376	672	0	1948	--
PHF	#DIV/0!				0.79				0.87				0.93				0.96	--
Heavy Vehicles	0	0	0	0	0	2	0	6	0	0	5	2	0	5	6	0	26	--
HV %	0.0%	0.0%	0.0%	0.0%	0.0%	1.2%	0.0%	3.3%	0.0%	0.0%	1.3%	1.1%	0.0%	1.3%	0.9%	0.0%	1.3%	--

Interval Start Time	Heavy Vehicles				
	EB	WB	NB	SB	Total
4:00 PM	0	4	2	5	11
4:15 PM	0	3	0	3	6
4:30 PM	0	1	3	0	4
4:45 PM	0	0	2	3	5
5:00 PM	0	0	0	4	4
5:15 PM	0	0	1	0	1
5:30 PM	0	2	1	0	3
5:45 PM	0	0	2	1	3
Count Total	0	10	11	16	37
Peak Hour Total	0	8	7	11	26
Peak Hour HV%	#DIV/0!	2.3%	1.3%	1.0%	1.3%

Pedestrians (Leg)				
E	W	N	S	Total
0	0	0	1	1
0	0	0	0	0
0	0	3	0	3
0	0	0	0	0
0	0	0	0	0
0	0	0	0	0
1	0	0	0	1
0	0	0	0	0
1	0	3	1	5
0	0	3	1	4

Bicycles (Leg)				
E	W	N	S	Total
0	0	0	0	0
2	0	0	0	2
0	0	0	0	0
0	1	0	0	1
0	0	0	0	0
0	0	0	0	0
0	0	0	0	0
0	0	0	0	0
2	1	0	0	3
2	1	0	0	3

General Office Building
(710)

Vehicle Trip Ends vs: **1000 Sq. Ft. GFA**
On a: **Weekday**

Setting/Location: **General Urban/Suburban**
Number of Studies: 59
Avg. 1000 Sq. Ft. GFA: 163
Directional Distribution: 50% entering, 50% exiting

Vehicle Trip Generation per 1000 Sq. Ft. GFA

Average Rate	Range of Rates	Standard Deviation
10.84	3.27 - 27.56	4.76

Data Plot and Equation

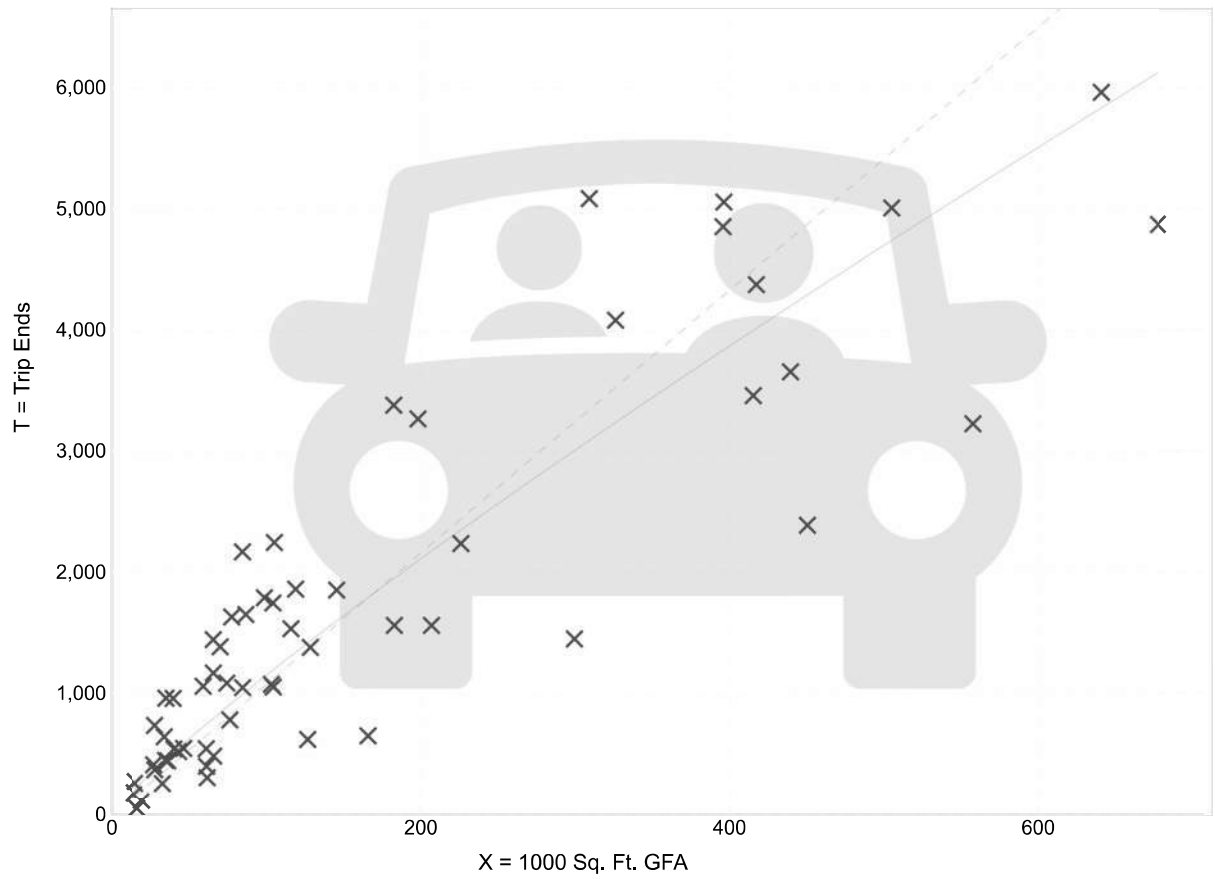

Fitted Curve Equation: Ln(T) = 0.87 Ln(X) + 3.05 **R^2= 0.78**

Trip Gen Manual, 11th Edition ● Institute of Transportation Engineers

General Office Building
(710)

Vehicle Trip Ends vs:	**1000 Sq. Ft. GFA**
On a:	**Weekday,**
	Peak Hour of Adjacent Street Traffic,
	One Hour Between 7 and 9 a.m.
Setting/Location:	**General Urban/Suburban**
Number of Studies:	221
Avg. 1000 Sq. Ft. GFA:	201
Directional Distribution:	88% entering, 12% exiting

Vehicle Trip Generation per 1000 Sq. Ft. GFA

Average Rate	Range of Rates	Standard Deviation
1.52	0.32 - 4.93	0.58

Data Plot and Equation

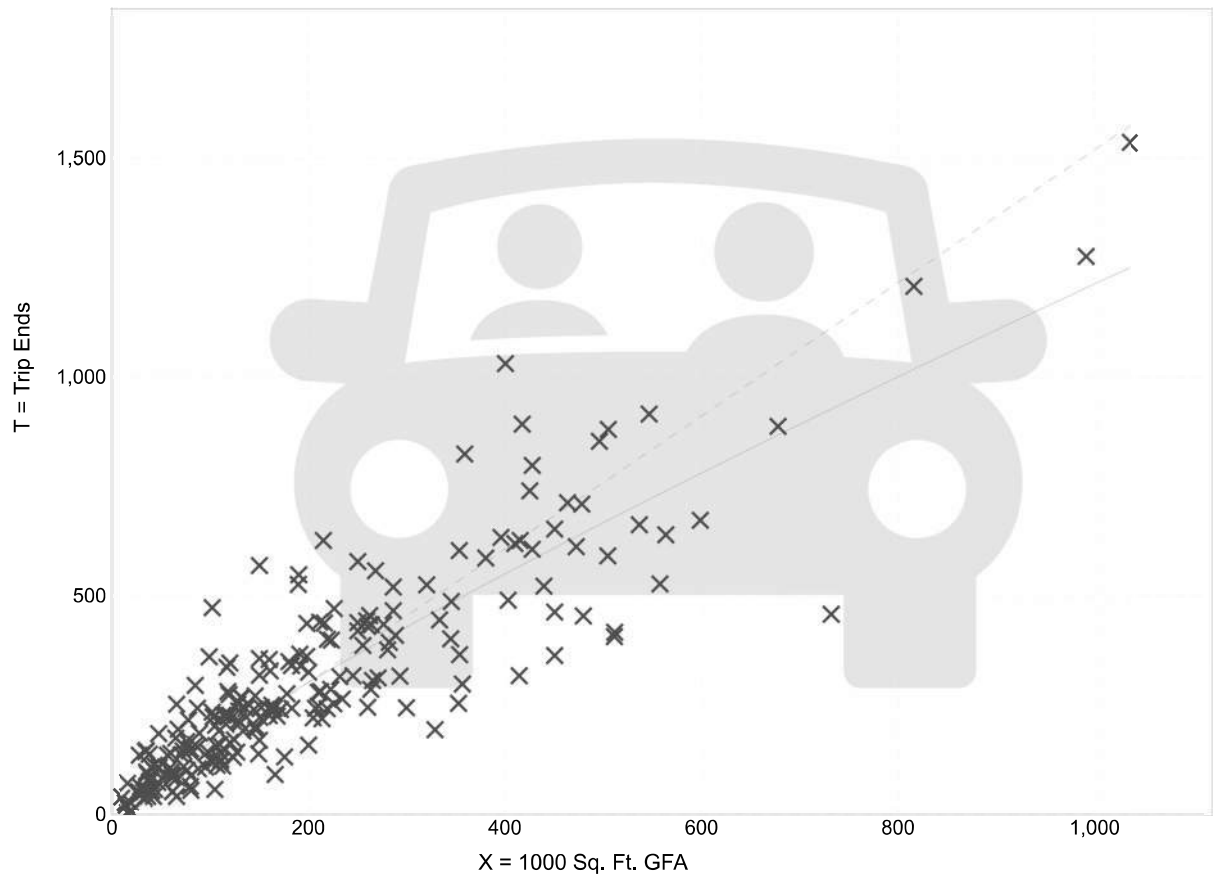

Fitted Curve Equation: Ln(T) = 0.86 Ln(X) + 1.16 **R^2= 0.78**

Trip Gen Manual, 11th Edition ● Institute of Transportation Engineers

General Office Building
(710)

Vehicle Trip Ends vs:	**1000 Sq. Ft. GFA**
On a:	**Weekday,**
	Peak Hour of Adjacent Street Traffic,
	One Hour Between 4 and 6 p.m.
Setting/Location:	**General Urban/Suburban**
Number of Studies:	232
Avg. 1000 Sq. Ft. GFA:	199
Directional Distribution:	17% entering, 83% exiting

Vehicle Trip Generation per 1000 Sq. Ft. GFA

Average Rate	Range of Rates	Standard Deviation
1.44	0.26 - 6.20	0.60

Data Plot and Equation

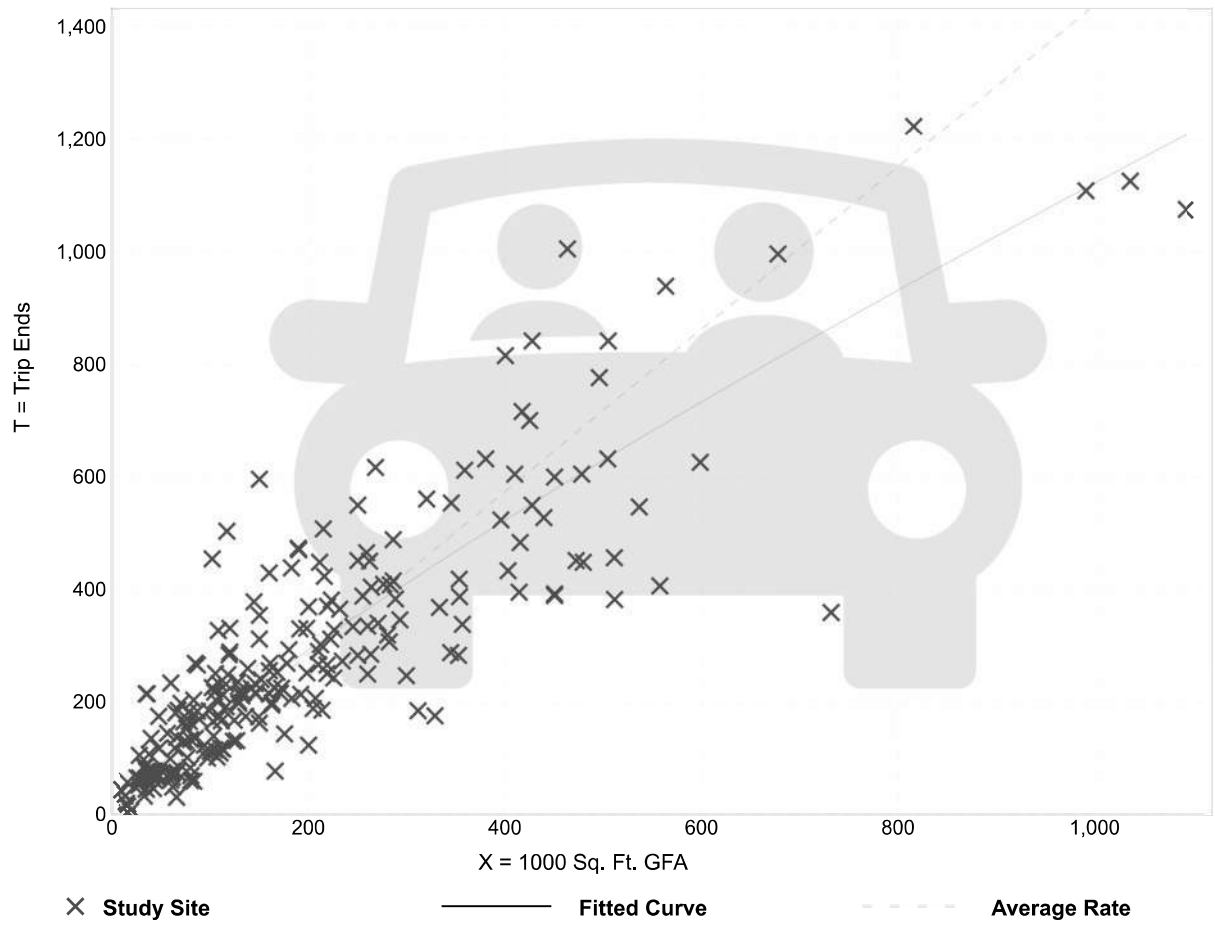

Fitted Curve Equation: Ln(T) = 0.83 Ln(X) + 1.29 **R^2= 0.77**

Trip Gen Manual, 11th Edition ● Institute of Transportation Engineers

Medical-Dental Office Building - Stand-Alone
(720)

Vehicle Trip Ends vs: **1000 Sq. Ft. GFA**
On a: **Weekday**

Setting/Location: **General Urban/Suburban**
Number of Studies: 18
Avg. 1000 Sq. Ft. GFA: 15
Directional Distribution: 50% entering, 50% exiting

Vehicle Trip Generation per 1000 Sq. Ft. GFA

Average Rate	Range of Rates	Standard Deviation
36.00	14.52 - 100.75	13.38

Data Plot and Equation

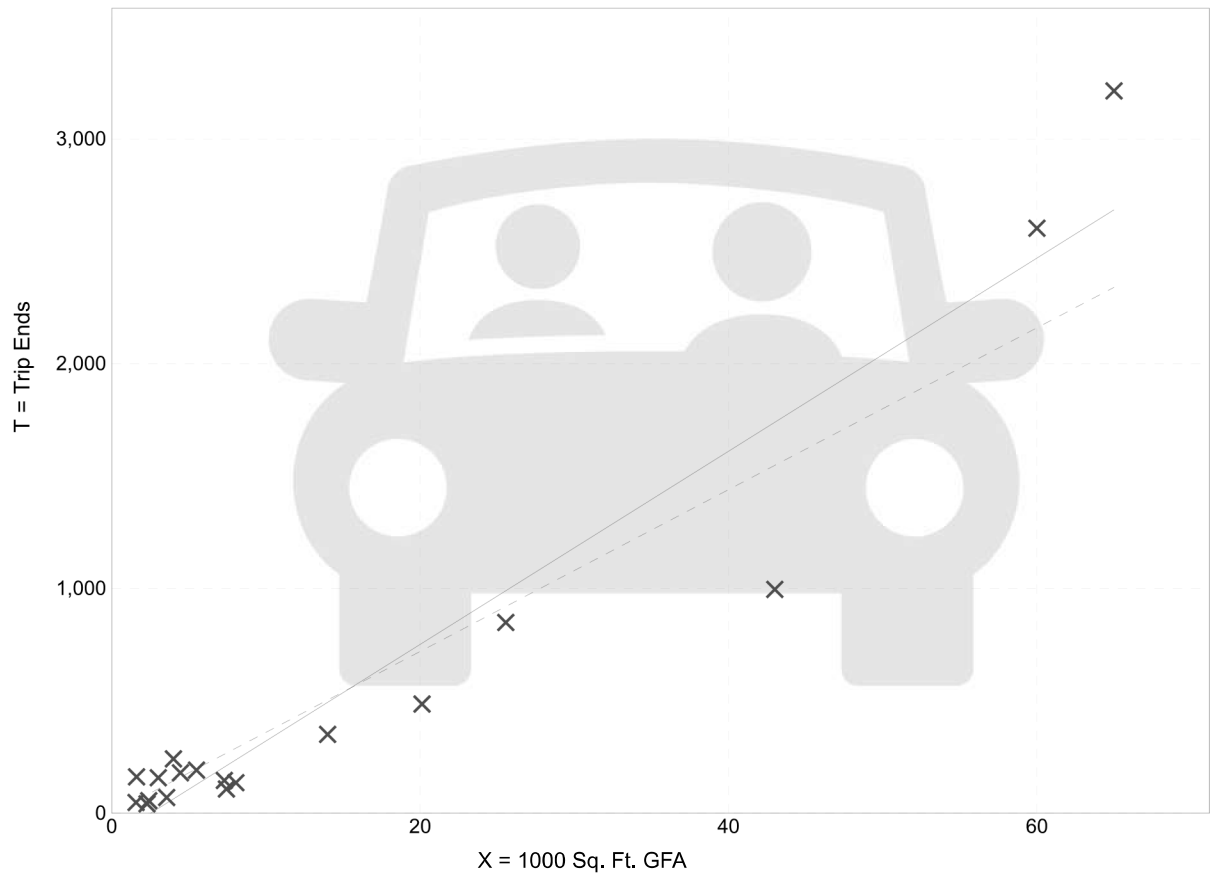

Fitted Curve Equation: T = 42.97(X) - 108.01 **R^2= 0.92**

Trip Gen Manual, 11th Edition • Institute of Transportation Engineers

Medical-Dental Office Building - Stand-Alone
(720)

Vehicle Trip Ends vs:	**1000 Sq. Ft. GFA**
On a:	**Weekday,**
	Peak Hour of Adjacent Street Traffic,
	One Hour Between 7 and 9 a.m.
Setting/Location:	**General Urban/Suburban**
Number of Studies:	24
Avg. 1000 Sq. Ft. GFA:	25
Directional Distribution:	79% entering, 21% exiting

Vehicle Trip Generation per 1000 Sq. Ft. GFA

Average Rate	Range of Rates	Standard Deviation
3.10	0.87 - 14.30	1.49

Data Plot and Equation

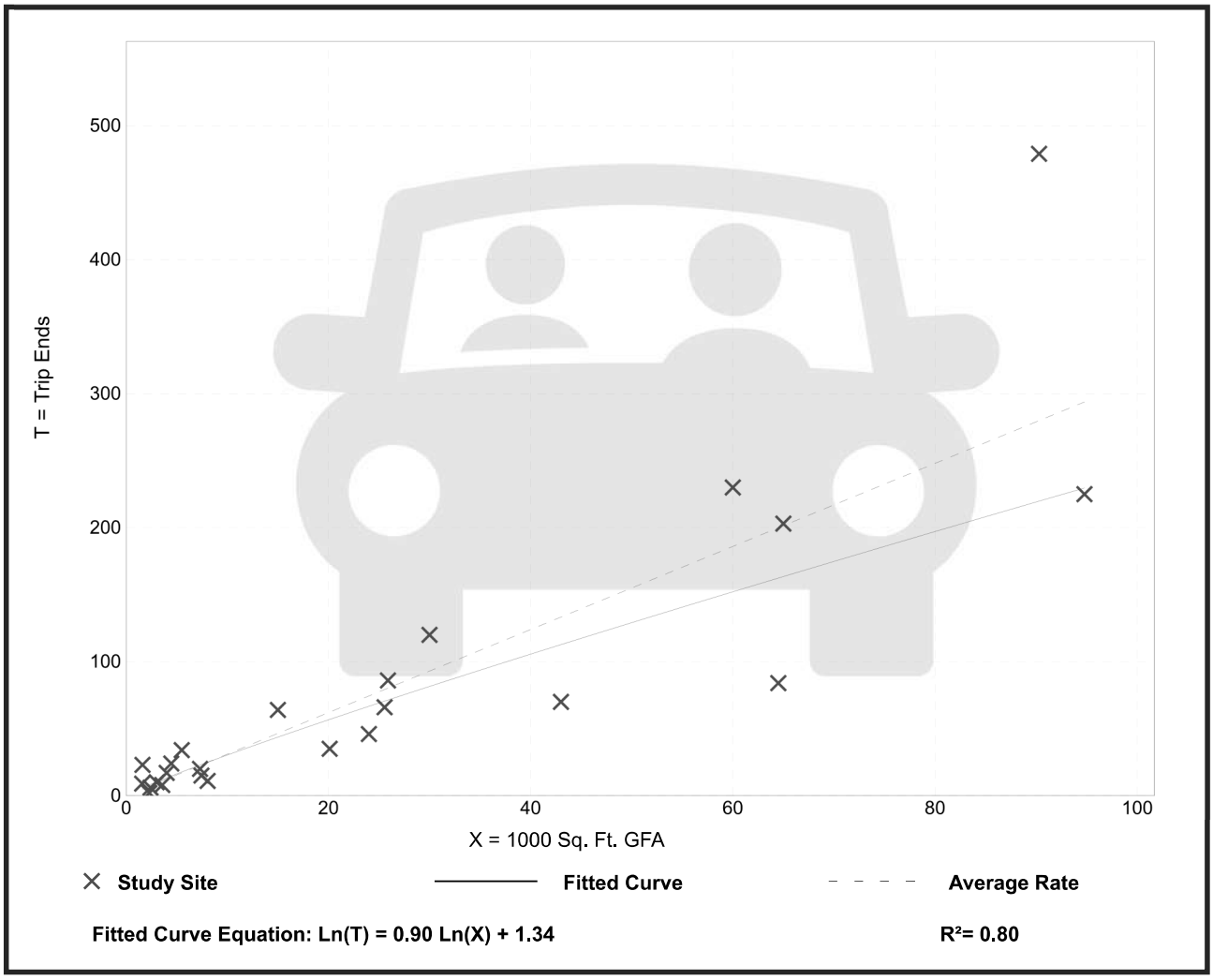

Trip Gen Manual, 11th Edition ● Institute of Transportation Engineers

Medical-Dental Office Building - Stand-Alone
(720)

Vehicle Trip Ends vs:	**1000 Sq. Ft. GFA**
On a:	**Weekday,**
	Peak Hour of Adjacent Street Traffic,
	One Hour Between 4 and 6 p.m.
Setting/Location:	**General Urban/Suburban**
Number of Studies:	30
Avg. 1000 Sq. Ft. GFA:	23
Directional Distribution:	30% entering, 70% exiting

Vehicle Trip Generation per 1000 Sq. Ft. GFA

Average Rate	Range of Rates	Standard Deviation
3.93	0.62 - 8.86	1.86

Data Plot and Equation

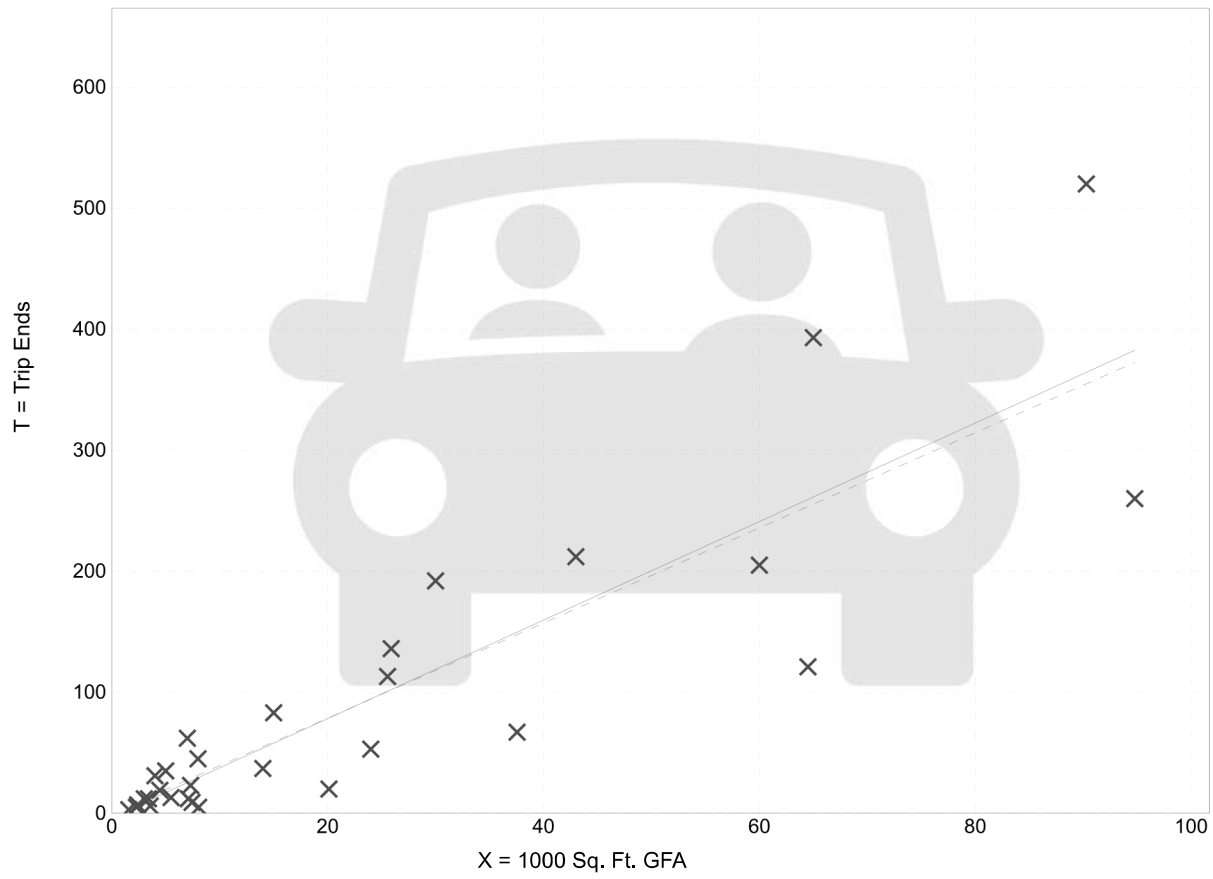

Fitted Curve Equation: T = 4.07(X) - 3.17 **R^2= 0.77**

Trip Gen Manual, 11th Edition ● Institute of Transportation Engineers

Fast Casual Restaurant
(930)

Vehicle Trip Ends vs: **1000 Sq. Ft. GFA**
On a: **Weekday**

Setting/Location: **General Urban/Suburban**
Number of Studies: 1
Avg. 1000 Sq. Ft. GFA: 1
Directional Distribution: 50% entering, 50% exiting

Vehicle Trip Generation per 1000 Sq. Ft. GFA

Average Rate	Range of Rates	Standard Deviation
97.14	97.14 - 97.14	*

Data Plot and Equation

Caution – Small Sample Size

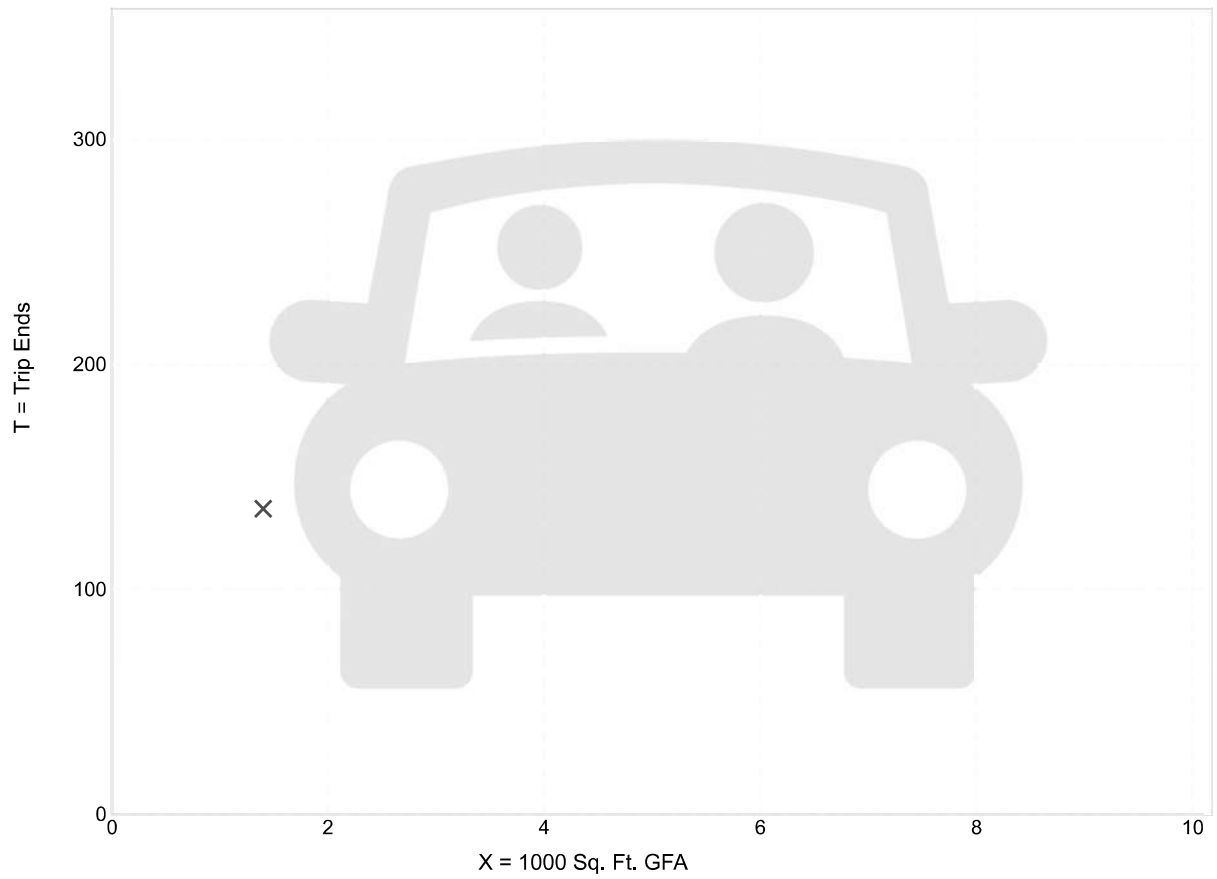

× **Study Site** - - - - **Average Rate**

Fitted Curve Equation: Not Given **R^2= ******

Trip Gen Manual, 11th Edition ● Institute of Transportation Engineers

Fast Casual Restaurant
(930)

Vehicle Trip Ends vs:	**1000 Sq. Ft. GFA**
On a:	**Weekday,**
	Peak Hour of Adjacent Street Traffic,
	One Hour Between 7 and 9 a.m.
Setting/Location:	**General Urban/Suburban**
Number of Studies:	1
Avg. 1000 Sq. Ft. GFA:	1
Directional Distribution:	50% entering, 50% exiting

Vehicle Trip Generation per 1000 Sq. Ft. GFA

Average Rate	Range of Rates	Standard Deviation
1.43	1.43 - 1.43	*

Data Plot and Equation

Caution – Small Sample Size

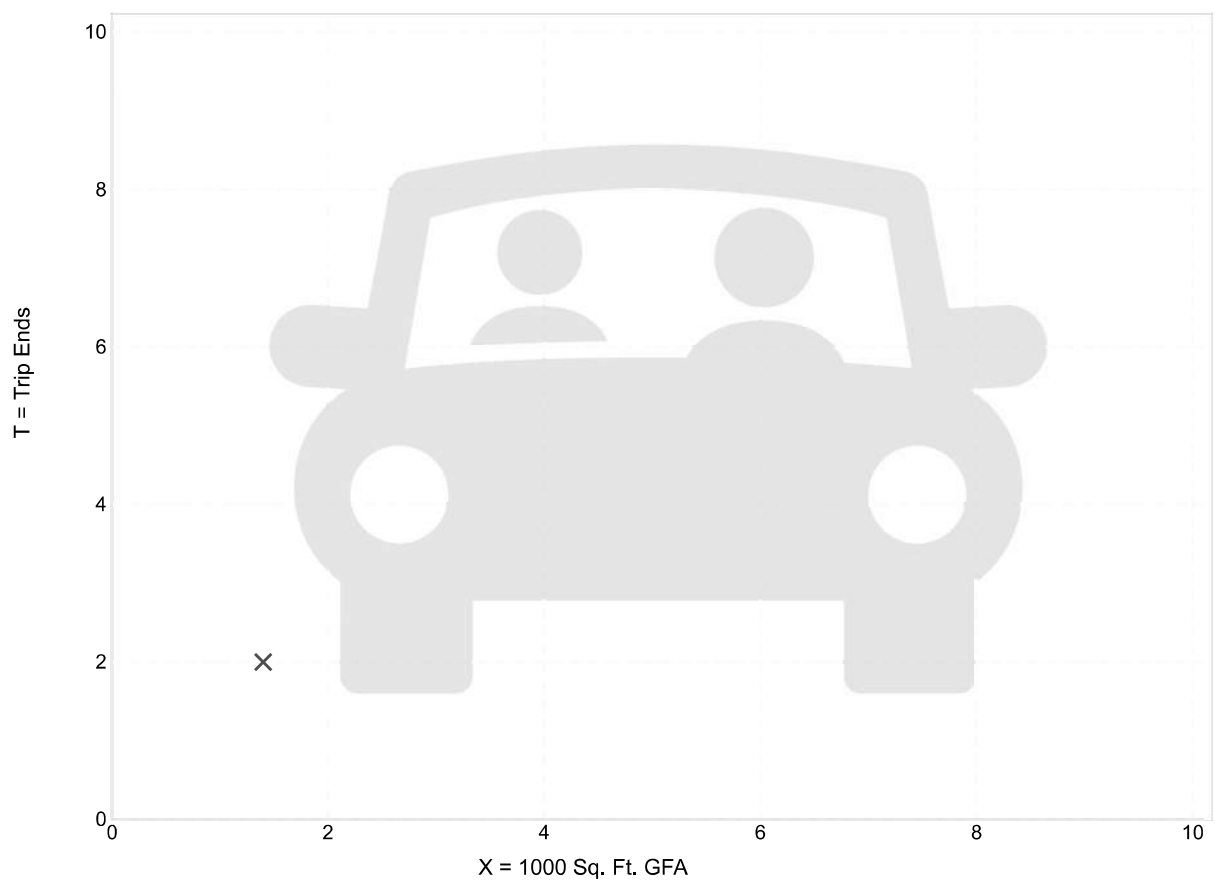

Fitted Curve Equation: Not Given **R^2= ****

Trip Gen Manual, 11th Edition ● Institute of Transportation Engineers

Fast Casual Restaurant
(930)

Vehicle Trip Ends vs:	**1000 Sq. Ft. GFA**
On a:	**Weekday,**
	Peak Hour of Adjacent Street Traffic,
	One Hour Between 4 and 6 p.m.
Setting/Location:	**General Urban/Suburban**
Number of Studies:	15
Avg. 1000 Sq. Ft. GFA:	3
Directional Distribution:	55% entering, 45% exiting

Vehicle Trip Generation per 1000 Sq. Ft. GFA

Average Rate	Range of Rates	Standard Deviation
12.55	5.94 - 27.40	5.52

Data Plot and Equation

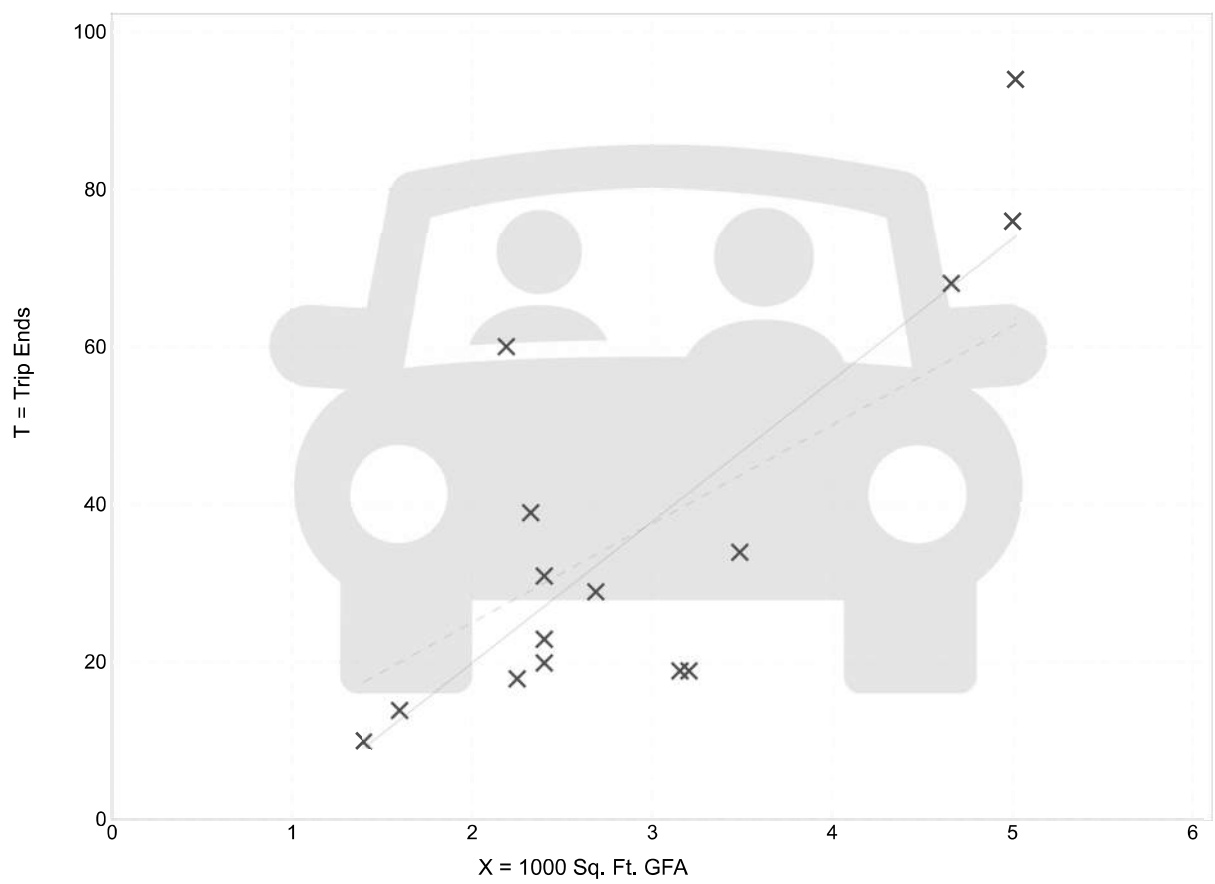

Fitted Curve Equation: T = 17.96(X) - 15.94 **R^2= 0.65**

Trip Gen Manual, 11th Edition ● Institute of Transportation Engineers

Heath & Associates, Inc
South Meridian Medical TIA 2-18-25

Peak Hour Forecast Intersection Volumes

Annual Growth Rate: 3 %
# of Years to Horizon: 3

2028

AM PEAK HOUR

1. S Meridian & 15th Ave

	SBR	SBT	SBL	WBR	WBT	WBL	NBR	NBT	NBL	EBR	EBT	EBL
Existing	38	491	297	128	77	63	71	1059	90	74	174	255
Project Trips	0	38	0	0	0	4	1	8	1	4	0	0
Pipeline	0	0	0	0	0	0	0	0	0	0	0	0
Without	42	537	325	140	84	69	78	1,157	98	81	190	279
With	42	575	325	140	84	73	79	1,165	99	85	190	279

PM PEAK HOUR

1. S Meridian & 7th Ave

	SBR	SBT	SBL	WBR	WBT	WBL	NBR	NBT	NBL	EBR	EBT	EBL
Existing	51	962	55	0	147	96	16	0	72	63	170	0
Project Trips	0	6	0	0	0	2	4	0	0	0	0	0
Pipeline	0	0	0	0	0	0	0	0	0	0	0	0
Without	56	1,051	60	0	161	105	17	0	79	69	186	0
With	56	1,057	60	0	161	107	21	0	79	69	186	0

2. S Meridian & 9th Ave

	SBR	SBT	SBL	WBR	WBT	WBL	NBR	NBT	NBL	EBR	EBT	EBL
Existing	37	1054	21	15	19	38	29	552	78	123	22	27
Project Trips	0	8	0	0	0	0	0	17	4	2	0	0
Pipeline	0	0	0	0	0	0	0	0	0	0	0	0
Without	40	1,152	23	16	21	42	32	603	85	134	24	30
With	40	1,160	23	16	21	42	32	620	89	136	24	30

3. S Meridian & SR 512 WB Ramps

	SBR	SBT	SBL	WBR	WBT	WBL	NBR	NBT	NBL	EBR	EBT	EBL
Existing	171	1006	0	31	1	302	0	705	174	0	0	0
Project Trips	0	10	0	0	0	6	0	21	9	0	0	0
Pipeline	0	0	0	0	0	0	0	0	0	0	0	0
Without	187	1,099	0	34	1	330	0	770	190	0	0	0
With	187	1,109	0	34	1	336	0	791	199	0	0	0

4. S Meridian & SR 512 EB Ramps

	SBR	SBT	SBL	WBR	WBT	WBL	NBR	NBT	NBL	EBR	EBT	EBL
Existing	0	1256	52	0	0	0	403	760	0	79	6	119
Project Trips	0	16	0	0	0	0	13	30	0	4	0	0
Pipeline	0	0	0	0	0	0	0	0	0	0	0	0
Without	0	1,372	57	0	0	0	440	830	0	86	7	130
With	0	1,388	57	0	0	0	453	860	0	90	7	130

5. S Meridian & 15th Ave

	SBR	SBT	SBL	WBR	WBT	WBL	NBR	NBT	NBL	EBR	EBT	EBL
Existing	125	1132	148	218	145	109	35	619	121	157	67	119
Project Trips	0	20	0	0	0	2	4	43	4	2	0	0
Pipeline	0	0	0	0	0	0	0	0	0	0	0	0
Without	137	1,237	162	238	158	119	38	676	132	172	73	130
With	137	1,257	162	238	158	121	42	719	136	174	73	130

6. S Meridian & 17th Ave

	SBR	SBT	SBL	WBR	WBT	WBL	NBR	NBT	NBL	EBR	EBT	EBL
Existing	0	1380	18	20	0	6	8	775	0	0	0	0
Project Trips	0	-3	27	55	0	38	18	-3	0	0	0	0
Pipeline	0	0	0	0	0	0	0	0	0	0	0	0
Without	0	1,508	20	22	0	7	9	847	0	0	0	0
With	0	1,505	47	77	0	45	27	844	0	0	0	0

7. S Meridian & 23rd Ave

	SBR	SBT	SBL	WBR	WBT	WBL	NBR	NBT	NBL	EBR	EBT	EBL
Existing	44	978	390	199	9	40	63	460	31	20	5	13
Project Trips	0	26	9	3	0	0	0	12	0	0	0	0
Pipeline	0	0	0	0	0	0	0	0	0	0	0	0
Without	48	1,069	426	217	10	44	69	503	34	22	5	14
With	48	1,095	435	220	10	44	69	515	34	22	5	14

8. S Meridian & 31st Ave

	SBR	SBT	SBL	WBR	WBT	WBL	NBR	NBT	NBL	EBR	EBT	EBL
Existing	0	672	376	183	0	161	184	371	0	0	0	0
Project Trips	0	22	4	2	0	0	0	10	0	0	0	0
Pipeline	0	0	0	0	0	0	0	0	0	0	0	0
Without	0	734	411	200	0	176	201	405	0	0	0	0
With	0	756	415	202	0	176	201	415	0	0	0	0

Movement	EBL	EBT	EBR	WBL	WBT	WBR	NBL	NBT	NBR	SBL	SBT	SBR
Lane Configurations												
Traffic Volume (veh/h)	255	174	74	63	77	128	90	1059	71	297	491	38
Future Volume (veh/h)	255	174	74	63	77	128	90	1059	71	297	491	38
Initial Q (Qb), veh	0	0	0	0	0	0	0	0	0	20	0	0
Lane Width Adj.	1.00	1.00	1.00	1.00	1.00	1.00	1.00	1.00	1.00	1.00	1.00	1.00
Ped-Bike Adj(A_pbT)	1.00		0.98	1.00		0.98	1.00		0.98	1.00		0.98
Parking Bus, Adj	1.00	1.00	1.00	1.00	1.00	1.00	1.00	1.00	1.00	1.00	1.00	1.00
Work Zone On Approach		No			No			No			No	
Adj Sat Flow, veh/h/ln	1658	1673	1673	2357	2357	2342	2076	2106	2121	1658	1658	1569
Adj Flow Rate, veh/h	271	185	79	67	82	136	96	1127	76	316	522	40
Peak Hour Factor	0.94	0.94	0.94	0.94	0.94	0.94	0.94	0.94	0.94	0.94	0.94	0.94
Percent Heavy Veh, %	2	1	1	1	1	2	4	2	1	2	2	8
Cap, veh/h	386	236	101	244	236	195	509	1425	96	420	1537	117
Arrive On Green	0.17	0.23	0.23	0.04	0.10	0.10	0.05	0.39	0.39	0.14	0.48	0.48
Sat Flow, veh/h	1579	1107	473	2245	2357	1947	1977	3797	256	1579	2961	226
Grp Volume(v), veh/h	271	0	264	67	82	136	96	593	610	316	277	285
Grp Sat Flow(s),veh/h/ln	1579	0	1579	2245	2357	1947	1977	2001	2053	1579	1575	1611
Q Serve(g_s), s	13.3	0.0	14.1	2.4	2.9	6.1	2.6	23.6	23.6	10.2	10.1	10.2
Cycle Q Clear(g_c), s	13.3	0.0	14.1	2.4	2.9	6.1	2.6	23.6	23.6	10.2	10.1	10.2
Prop In Lane	1.00		0.30	1.00		1.00	1.00		0.12	1.00		0.14
Lane Grp Cap(c), veh/h	386	0	337	244	236	195	509	751	770	420	818	837
V/C Ratio(X)	0.70	0.00	0.78	0.27	0.35	0.70	0.19	0.79	0.79	0.75	0.34	0.34
Avail Cap(c_a), veh/h	438	0	656	321	700	578	567	1270	1303	660	1414	1446
HCM Platoon Ratio	1.00	1.00	1.00	1.00	1.00	1.00	1.00	1.00	1.00	1.00	1.00	1.00
Upstream Filter(I)	1.00	0.00	1.00	1.00	1.00	1.00	1.00	1.00	1.00	1.00	1.00	1.00
Uniform Delay (d), s/veh	33.6	0.0	38.6	39.4	43.5	45.1	18.2	28.9	28.9	24.4	14.3	14.3
Incr Delay (d2), s/veh	4.3	0.0	4.0	0.6	0.9	4.5	0.2	1.9	1.9	2.8	0.2	0.2
Initial Q Delay(d3), s/veh	0.0	0.0	0.0	0.0	0.0	0.0	0.0	0.0	0.0	66.1	0.0	0.0
%ile BackOfQ(50%),veh/ln	6.3	0.0	6.6	1.6	2.0	3.6	1.4	13.0	13.3	16.1	3.6	3.7
Unsig. Movement Delay, s/veh												
LnGrp Delay(d), s/veh	37.9	0.0	42.6	40.1	44.3	49.6	18.4	30.8	30.8	93.2	14.5	14.5
LnGrp LOS	D		D	D	D	D	B	C	C	F	B	B
Approach Vol, veh/h		535			285			1299			878	
Approach Delay, s/veh		40.2			45.8			29.9			42.8	
Approach LOS		D			D			C			D	

Timer - Assigned Phs	1	2	3	4	5	6	7	8
Phs Duration (G+Y+Rc), s	17.6	39.8	8.6	25.3	9.1	48.3	19.9	13.9
Change Period (Y+Rc), s	4.5	4.5	4.5	4.5	4.5	4.5	4.5	4.5
Max Green Setting (Gmax), s	30.5	57.9	5.7	37.9	6.5	81.9	16.5	27.1
Max Q Clear Time (g_c+I1), s	12.2	25.6	4.4	16.1	4.6	12.2	15.3	8.1
Green Ext Time (p_c), s	0.9	9.7	0.0	1.5	0.0	3.7	0.1	0.8

Intersection Summary	
HCM 7th Control Delay, s/veh	37.0
HCM 7th LOS	D

Movement	EBL	EBT	EBR	WBL	WBT	WBR	NBL	NBT	NBR	SBL	SBT	SBR
Lane Configurations												
Traffic Volume (veh/h)	0	170	63	96	147	0	72	0	16	55	962	51
Future Volume (veh/h)	0	170	63	96	147	0	72	0	16	55	962	51
Initial Q (Qb), veh	0	0	0	0	0	0	0	0	0	0	0	0
Lane Width Adj.	1.00	1.00	1.00	1.00	1.00	1.00	1.00	1.00	1.00	1.00	1.00	1.00
Ped-Bike Adj(A_pbT)	1.00		0.95	0.98		1.00	1.00		0.88	1.00		0.95
Parking Bus, Adj	1.00	1.00	1.00	1.00	1.00	1.00	1.00	1.00	1.00	1.00	1.00	1.00
Work Zone On Approach		No			No			No			No	
Adj Sat Flow, veh/h/ln	0	1870	1870	1870	1885	0	1885	1885	1885	1885	1885	1885
Adj Flow Rate, veh/h	0	179	66	101	155	0	76	0	17	58	1013	54
Peak Hour Factor	0.95	0.95	0.95	0.95	0.95	0.95	0.95	0.95	0.95	0.95	0.95	0.95
Percent Heavy Veh, %	0	2	2	2	1	0	1	1	1	1	1	1
Cap, veh/h	0	338	272	310	568	0	171	0	38	77	1345	72
Arrive On Green	0.00	0.18	0.18	0.06	0.30	0.00	0.12	0.00	0.12	0.40	0.40	0.40
Sat Flow, veh/h	0	1870	1502	1781	1885	0	1397	0	312	192	3347	178
Grp Volume(v), veh/h	0	179	66	101	155	0	93	0	0	567	0	558
Grp Sat Flow(s),veh/h/ln	0	1870	1502	1781	1885	0	1709	0	0	1876	0	1842
Q Serve(g_s), s	0.0	6.7	2.9	3.4	4.8	0.0	3.9	0.0	0.0	20.1	0.0	20.1
Cycle Q Clear(g_c), s	0.0	6.7	2.9	3.4	4.8	0.0	3.9	0.0	0.0	20.1	0.0	20.1
Prop In Lane	0.00		1.00	1.00		0.00	0.82		0.18	0.10		0.10
Lane Grp Cap(c), veh/h	0	338	272	310	568	0	209	0	0	753	0	740
V/C Ratio(X)	0.00	0.53	0.24	0.33	0.27	0.00	0.44	0.00	0.00	0.75	0.00	0.75
Avail Cap(c_a), veh/h	0	520	417	417	865	0	541	0	0	1248	0	1225
HCM Platoon Ratio	1.00	1.00	1.00	1.00	1.00	1.00	1.00	1.00	1.00	1.00	1.00	1.00
Upstream Filter(I)	0.00	1.00	1.00	1.00	1.00	0.00	1.00	0.00	0.00	1.00	0.00	1.00
Uniform Delay (d), s/veh	0.0	28.7	27.2	22.4	20.6	0.0	31.5	0.0	0.0	19.9	0.0	19.9
Incr Delay (d2), s/veh	0.0	1.3	0.5	0.6	0.3	0.0	1.5	0.0	0.0	1.6	0.0	1.6
Initial Q Delay(d3), s/veh	0.0	0.0	0.0	0.0	0.0	0.0	0.0	0.0	0.0	0.0	0.0	0.0
%ile BackOfQ(50%),veh/ln	0.0	3.0	1.1	1.4	2.1	0.0	1.7	0.0	0.0	8.5	0.0	8.3
Unsig. Movement Delay, s/veh												
LnGrp Delay(d), s/veh	0.0	30.0	27.6	23.1	20.8	0.0	33.0	0.0	0.0	21.4	0.0	21.5
LnGrp LOS		C	C	C	C		C			C		C
Approach Vol, veh/h		245			256			93			1125	
Approach Delay, s/veh		29.4			21.7			33.0			21.4	
Approach LOS		C			C			C			C	

Timer - Assigned Phs		2	3	4		6		8				
Phs Duration (G+Y+Rc), s		14.0	9.3	18.5		35.6		27.8				
Change Period (Y+Rc), s		4.5	4.5	4.5		4.5		4.5				
Max Green Setting (Gmax), s		24.5	9.5	21.5		51.5		35.5				
Max Q Clear Time (g_c+I1), s		5.9	5.4	8.7		22.1		6.8				
Green Ext Time (p_c), s		0.4	0.1	0.9		9.0		0.9				

Intersection Summary	
HCM 7th Control Delay, s/veh	23.2
HCM 7th LOS	C

Movement	EBL	EBT	EBR	WBL	WBT	WBR	NBL	NBT	NBR	SBL	SBT	SBR
Lane Configurations												
Traffic Volume (veh/h)	27	22	123	38	19	15	78	552	29	21	1054	37
Future Volume (veh/h)	27	22	123	38	19	15	78	552	29	21	1054	37
Initial Q (Qb), veh	0	0	0	0	0	0	0	0	0	0	0	0
Lane Width Adj.	1.00	1.00	1.00	1.00	1.00	1.00	1.00	1.00	1.00	1.00	1.00	1.00
Ped-Bike Adj(A_pbT)	0.96		0.96	0.98		0.93	1.00		0.96	0.99		0.96
Parking Bus, Adj	1.00	1.00	1.00	1.00	1.00	1.00	1.00	1.00	1.00	1.00	1.00	1.00
Work Zone On Approach		No			No			No			No	
Adj Sat Flow, veh/h/ln	1885	1885	1885	1885	1885	1885	1856	1885	1885	1885	1885	1885
Adj Flow Rate, veh/h	27	22	124	38	19	15	79	558	29	21	1065	37
Peak Hour Factor	0.99	0.99	0.99	0.99	0.99	0.99	0.99	0.99	0.99	0.99	0.99	0.99
Percent Heavy Veh, %	1	1	1	1	1	1	3	1	1	1	1	1
Cap, veh/h	253	176	306	284	120	298	379	1752	91	530	1643	57
Arrive On Green	0.20	0.20	0.20	0.20	0.20	0.20	0.07	0.51	0.51	0.03	0.47	0.47
Sat Flow, veh/h	713	880	1532	828	600	1489	1767	3456	179	1795	3525	122
Grp Volume(v), veh/h	49	0	124	57	0	15	79	289	298	21	541	561
Grp Sat Flow(s),veh/h/ln	1593	0	1532	1428	0	1489	1767	1791	1844	1795	1791	1857
Q Serve(g_s), s	0.0	0.0	3.6	0.4	0.0	0.4	1.1	4.8	4.8	0.3	11.7	11.7
Cycle Q Clear(g_c), s	1.1	0.0	3.6	1.4	0.0	0.4	1.1	4.8	4.8	0.3	11.7	11.7
Prop In Lane	0.55		1.00	0.67		1.00	1.00		0.10	1.00		0.07
Lane Grp Cap(c), veh/h	429	0	306	404	0	298	379	908	935	530	835	865
V/C Ratio(X)	0.11	0.00	0.40	0.14	0.00	0.05	0.21	0.32	0.32	0.04	0.65	0.65
Avail Cap(c_a), veh/h	930	0	805	857	0	782	700	3108	3201	752	2930	3038
HCM Platoon Ratio	1.00	1.00	1.00	1.00	1.00	1.00	1.00	1.00	1.00	1.00	1.00	1.00
Upstream Filter(I)	1.00	0.00	1.00	1.00	0.00	1.00	1.00	1.00	1.00	1.00	1.00	1.00
Uniform Delay (d), s/veh	16.6	0.0	17.6	16.7	0.0	16.3	7.4	7.3	7.3	6.7	10.3	10.3
Incr Delay (d2), s/veh	0.1	0.0	0.9	0.2	0.0	0.1	0.3	0.2	0.2	0.0	0.9	0.8
Initial Q Delay(d3), s/veh	0.0	0.0	0.0	0.0	0.0	0.0	0.0	0.0	0.0	0.0	0.0	0.0
%ile BackOfQ(50%),veh/ln	0.4	0.0	1.2	0.5	0.0	0.1	0.3	1.4	1.4	0.1	3.8	3.9
Unsig. Movement Delay, s/veh												
LnGrp Delay(d), s/veh	16.7	0.0	18.4	16.8	0.0	16.4	7.6	7.5	7.5	6.7	11.2	11.1
LnGrp LOS	B		B	B		B	A	A	A	A	B	B
Approach Vol, veh/h		173			72			666			1123	
Approach Delay, s/veh		17.9			16.7			7.5			11.1	
Approach LOS		B			B			A			B	

Timer - Assigned Phs	1	2		4	5	6		8
Phs Duration (G+Y+Rc), s	5.8	30.1		14.6	7.8	28.0		14.6
Change Period (Y+Rc), s	4.5	4.5		4.5	4.5	4.5		4.5
Max Green Setting (Gmax), s	7.5	87.5		26.5	12.5	82.5		26.5
Max Q Clear Time (g_c+I1), s	2.3	6.8		5.6	3.1	13.7		3.4
Green Ext Time (p_c), s	0.0	3.9		0.6	0.1	9.8		0.3

Intersection Summary		
HCM 7th Control Delay, s/veh		10.7
HCM 7th LOS		B

Movement	EBL	EBT	EBR	WBL	WBT	WBR	NBL	NBT	NBR	SBL	SBT	SBR
Lane Configurations												
Traffic Volume (veh/h)	0	0	0	302	1	31	174	705	0	0	1006	171
Future Volume (veh/h)	0	0	0	302	1	31	174	705	0	0	1006	171
Initial Q (Qb), veh				0	0	0	0	0	0	0	0	0
Lane Width Adj.				1.00	1.00	1.00	1.00	1.00	1.00	1.00	1.00	1.00
Ped-Bike Adj(A_pbT)				1.00		1.00	1.00		1.00	1.00		1.00
Parking Bus, Adj				1.00	1.00	1.00	1.00	1.00	1.00	1.00	1.00	1.00
Work Zone On Approach					No			No			No	
Adj Sat Flow, veh/h/ln				1885	1885	1885	1870	1870	0	0	1870	1870
Adj Flow Rate, veh/h				328	1	34	189	766	0	0	1093	186
Peak Hour Factor				0.92	0.92	0.92	0.92	0.92	0.92	0.92	0.92	0.92
Percent Heavy Veh, %				1	1	1	2	2	0	0	2	2
Cap, veh/h				418	1	373	313	2245	0	0	1494	254
Arrive On Green				0.23	0.23	0.23	0.07	0.63	0.00	0.00	0.49	0.49
Sat Flow, veh/h				1790	5	1598	1781	3647	0	0	3132	516
Grp Volume(v), veh/h				329	0	34	189	766	0	0	638	641
Grp Sat Flow(s),veh/h/ln				1796	0	1598	1781	1777	0	0	1777	1778
Q Serve(g_s), s				11.5	0.0	1.1	0.0	6.8	0.0	0.0	19.0	19.1
Cycle Q Clear(g_c), s				11.5	0.0	1.1	0.0	6.8	0.0	0.0	19.0	19.1
Prop In Lane				1.00		1.00	1.00		0.00	0.00		0.29
Lane Grp Cap(c), veh/h				419	0	373	313	2245	0	0	874	874
V/C Ratio(X)				0.79	0.00	0.09	0.60	0.34	0.00	0.00	0.73	0.73
Avail Cap(c_a), veh/h				1063	0	946	731	4874	0	0	1771	1772
HCM Platoon Ratio				1.00	1.00	1.00	1.00	1.00	1.00	1.00	1.00	1.00
Upstream Filter(I)				1.00	0.00	1.00	1.00	1.00	0.00	0.00	1.00	1.00
Uniform Delay (d), s/veh				24.0	0.0	20.0	26.4	5.8	0.0	0.0	13.4	13.5
Incr Delay (d2), s/veh				3.3	0.0	0.1	1.9	0.1	0.0	0.0	1.2	1.2
Initial Q Delay(d3), s/veh				0.0	0.0	0.0	0.0	0.0	0.0	0.0	0.0	0.0
%ile BackOfQ(50%),veh/ln				4.9	0.0	0.4	2.8	1.8	0.0	0.0	6.6	6.6
Unsig. Movement Delay, s/veh												
LnGrp Delay(d), s/veh				27.3	0.0	20.1	28.2	5.9	0.0	0.0	14.6	14.7
LnGrp LOS				C		C	C	A			B	B
Approach Vol, veh/h					363			955			1279	
Approach Delay, s/veh					26.6			10.3			14.7	
Approach LOS					C			B			B	

Timer - Assigned Phs	2	5	6	8
Phs Duration (G+Y+Rc), s	46.7	9.3	37.3	20.1
Change Period (Y+Rc), s	4.5	4.5	4.5	4.5
Max Green Setting (Gmax), s	91.5	20.5	66.5	39.5
Max Q Clear Time (g_c+I1), s	8.8	2.0	21.1	13.5
Green Ext Time (p_c), s	6.2	0.5	11.7	2.1

Intersection Summary	
HCM 7th Control Delay, s/veh	14.7
HCM 7th LOS	B

4: SR 161 & SR 510 EB Off Ramp/SR 510 EB On Ramp

Movement	EBL	EBT	EBR	WBL	WBT	WBR	NBL	NBT	NBR	SBL	SBT	SBR
Lane Configurations												
Traffic Volume (veh/h)	119	6	79	0	0	0	0	760	403	52	1256	0
Future Volume (veh/h)	119	6	79	0	0	0	0	760	403	52	1256	0
Initial Q (Qb), veh	0	0	0				0	0	0	0	0	0
Lane Width Adj.	1.00	1.00	1.00				1.00	1.00	1.00	1.00	1.00	1.00
Ped-Bike Adj(A_pbT)	1.00		1.00				1.00		1.00	1.00		1.00
Parking Bus, Adj	1.00	1.00	1.00				1.00	1.00	1.00	1.00	1.00	1.00
Work Zone On Approach		No						No			No	
Adj Sat Flow, veh/h/ln	1885	1885	1885				0	1870	1885	1870	1885	0
Adj Flow Rate, veh/h	125	6	0				0	800	424	55	1322	0
Peak Hour Factor	0.95	0.95	0.95				0.95	0.95	0.95	0.95	0.95	0.95
Percent Heavy Veh, %	1	1	1				0	2	1	2	1	0
Cap, veh/h	177	9					0	1236	651	370	2513	0
Arrive On Green	0.10	0.10	0.00				0.00	0.55	0.55	0.05	0.70	0.00
Sat Flow, veh/h	1717	82	1598				0	2343	1185	1781	3676	0
Grp Volume(v), veh/h	131	0	0				0	631	593	55	1322	0
Grp Sat Flow(s),veh/h/ln	1799	0	1598				0	1777	1657	1781	1791	0
Q Serve(g_s), s	3.2	0.0	0.0				0.0	11.5	11.6	0.0	8.1	0.0
Cycle Q Clear(g_c), s	3.2	0.0	0.0				0.0	11.5	11.6	0.0	8.1	0.0
Prop In Lane	0.95		1.00				0.00		0.72	1.00		0.00
Lane Grp Cap(c), veh/h	186	0					0	976	910	370	2513	0
V/C Ratio(X)	0.70	0.00					0.00	0.65	0.65	0.15	0.53	0.00
Avail Cap(c_a), veh/h	1033	0					0	3484	3249	639	8110	0
HCM Platoon Ratio	1.00	1.00	1.00				1.00	1.00	1.00	1.00	1.00	1.00
Upstream Filter(I)	1.00	0.00	0.00				0.00	1.00	1.00	1.00	1.00	0.00
Uniform Delay (d), s/veh	20.0	0.0	0.0				0.0	7.3	7.3	12.5	3.3	0.0
Incr Delay (d2), s/veh	4.8	0.0	0.0				0.0	0.7	0.8	0.2	0.2	0.0
Initial Q Delay(d3), s/veh	0.0	0.0	0.0				0.0	0.0	0.0	0.0	0.0	0.0
%ile BackOfQ(50%),veh/ln	1.4	0.0	0.0				0.0	2.8	2.7	0.4	0.8	0.0
Unsig. Movement Delay, s/veh												
LnGrp Delay(d), s/veh	24.8	0.0	0.0				0.0	8.0	8.1	12.7	3.4	0.0
LnGrp LOS	C							A	A	B	A	
Approach Vol, veh/h		131						1224			1377	
Approach Delay, s/veh		24.8						8.0			3.8	
Approach LOS		C						A			A	

Timer - Assigned Phs	1	2		4		6
Phs Duration (G+Y+Rc), s	7.0	29.9		9.3		36.9
Change Period (Y+Rc), s	4.5	4.5		4.5		4.5
Max Green Setting (Gmax), s	9.5	90.5		26.5		104.5
Max Q Clear Time (g_c+I1), s	2.0	13.6		5.2		10.1
Green Ext Time (p_c), s	0.0	11.8		0.6		14.6

Intersection Summary	
HCM 7th Control Delay, s/veh	6.7
HCM 7th LOS	A

Notes

User approved pedestrian interval to be less than phase max green.

Unsignalized Delay for [EBR] is excluded from calculations of the approach delay and intersection delay.

Movement	EBL	EBT	EBR	WBL	WBT	WBR	NBL	NBT	NBR	SBL	SBT	SBR
Lane Configurations												
Traffic Volume (veh/h)	119	67	157	109	145	218	121	619	35	148	1132	125
Future Volume (veh/h)	119	67	157	109	145	218	121	619	35	148	1132	125
Initial Q (Qb), veh	0	0	0	0	0	0	0	0	0	0	0	0
Lane Width Adj.	1.00	1.00	1.00	1.00	1.00	1.00	1.00	1.00	1.00	1.00	1.00	1.00
Ped-Bike Adj(A_pbT)	1.00		0.99	1.00		0.99	1.00		0.99	1.00		0.99
Parking Bus, Adj	1.00	1.00	1.00	1.00	1.00	1.00	1.00	1.00	1.00	1.00	1.00	1.00
Work Zone On Approach		No			No			No			No	
Adj Sat Flow, veh/h/ln	1673	1673	1673	2357	2357	2357	2121	2121	2091	1673	1673	1673
Adj Flow Rate, veh/h	129	73	171	118	158	237	132	673	38	161	1230	136
Peak Hour Factor	0.92	0.92	0.92	0.92	0.92	0.92	0.92	0.92	0.92	0.92	0.92	0.92
Percent Heavy Veh, %	1	1	1	1	1	1	1	1	3	1	1	1
Cap, veh/h	311	90	211	272	427	359	239	1894	107	434	1461	161
Arrive On Green	0.08	0.20	0.20	0.06	0.18	0.18	0.05	0.49	0.49	0.07	0.51	0.51
Sat Flow, veh/h	1593	442	1034	2245	2357	1978	2020	3876	219	1593	2885	318
Grp Volume(v), veh/h	129	0	244	118	158	237	132	350	361	161	676	690
Grp Sat Flow(s),veh/h/ln	1593	0	1476	2245	2357	1978	2020	2015	2080	1593	1589	1614
Q Serve(g_s), s	6.6	0.0	16.1	4.3	6.0	11.4	3.3	10.9	11.0	5.1	37.2	37.6
Cycle Q Clear(g_c), s	6.6	0.0	16.1	4.3	6.0	11.4	3.3	10.9	11.0	5.1	37.2	37.6
Prop In Lane	1.00		0.70	1.00		1.00	1.00		0.11	1.00		0.20
Lane Grp Cap(c), veh/h	311	0	301	272	427	359	239	985	1016	434	805	817
V/C Ratio(X)	0.41	0.00	0.81	0.43	0.37	0.66	0.55	0.36	0.36	0.37	0.84	0.84
Avail Cap(c_a), veh/h	362	0	456	385	719	604	440	1509	1558	524	1150	1167
HCM Platoon Ratio	1.00	1.00	1.00	1.00	1.00	1.00	1.00	1.00	1.00	1.00	1.00	1.00
Upstream Filter(I)	1.00	0.00	1.00	1.00	1.00	1.00	1.00	1.00	1.00	1.00	1.00	1.00
Uniform Delay (d), s/veh	30.2	0.0	38.7	31.9	36.6	38.8	20.3	16.1	16.1	11.8	21.6	21.7
Incr Delay (d2), s/veh	0.9	0.0	6.5	1.1	0.5	2.1	2.0	0.2	0.2	0.5	3.9	4.1
Initial Q Delay(d3), s/veh	0.0	0.0	0.0	0.0	0.0	0.0	0.0	0.0	0.0	0.0	0.0	0.0
%ile BackOfQ(50%),veh/ln	2.6	0.0	6.2	2.4	3.5	5.7	1.5	4.9	5.0	1.7	13.6	14.0
Unsig. Movement Delay, s/veh												
LnGrp Delay(d), s/veh	31.1	0.0	45.1	33.0	37.1	40.9	22.3	16.3	16.3	12.3	25.5	25.7
LnGrp LOS	C		D	C	D	D	C	B	B	B	C	C
Approach Vol, veh/h		373			513			843			1527	
Approach Delay, s/veh		40.3			37.9			17.3			24.2	
Approach LOS		D			D			B			C	

Timer - Assigned Phs	1	2	3	4	5	6	7	8
Phs Duration (G+Y+Rc), s	11.7	54.3	10.7	25.3	9.9	56.1	13.0	23.0
Change Period (Y+Rc), s	4.5	4.5	4.5	4.5	4.5	4.5	4.5	4.5
Max Green Setting (Gmax), s	12.9	76.3	11.3	31.5	15.5	73.7	11.7	31.1
Max Q Clear Time (g_c+I1), s	7.1	13.0	6.3	18.1	5.3	39.6	8.6	13.4
Green Ext Time (p_c), s	0.2	4.9	0.1	1.1	0.2	12.0	0.1	1.6

Intersection Summary	
HCM 7th Control Delay, s/veh	26.4
HCM 7th LOS	C

Intersection	
Int Delay, s/veh	0.2

Movement	WBL	WBR	NBT	NBR	SBL	SBT
Lane Configurations						
Traffic Vol, veh/h	6	20	755	8	18	1380
Future Vol, veh/h	6	20	755	8	18	1380
Conflicting Peds, #/hr	0	0	0	0	0	0
Sign Control	Stop	Stop	Free	Free	Free	Free
RT Channelized	-	None	-	None	-	None
Storage Length	0	-	-	-	100	-
Veh in Median Storage, #	1	-	0	-	-	0
Grade, %	-3	-	-6	-	-	6
Peak Hour Factor	92	92	92	92	92	92
Heavy Vehicles, %	1	10	2	1	1	2
Mvmt Flow	7	22	821	9	20	1500

Major/Minor	Minor1		Major1		Major2	
Conflicting Flow All	1614	415	0	0	829	0
Stage 1	825	-	-	-	-	-
Stage 2	789	-	-	-	-	-
Critical Hdwy	6.22	6.8	-	-	4.12	-
Critical Hdwy Stg 1	5.22	-	-	-	-	-
Critical Hdwy Stg 2	5.22	-	-	-	-	-
Follow-up Hdwy	3.51	3.4	-	-	2.21	-
Pot Cap-1 Maneuver	125	585	-	-	805	-
Stage 1	451	-	-	-	-	-
Stage 2	468	-	-	-	-	-
Platoon blocked, %			-	-		-
Mov Cap-1 Maneuver	122	585	-	-	805	-
Mov Cap-2 Maneuver	263	-	-	-	-	-
Stage 1	451	-	-	-	-	-
Stage 2	457	-	-	-	-	-

Approach	WB	NB	SB
HCM Ctrl Dly, s/v	13.42	0	0.12
HCM LOS	B		

Minor Lane/Major Mvmt	NBT	NBR	WBLn1	SBL	SBT
Capacity (veh/h)	-	-	456	805	-
HCM Lane V/C Ratio	-	-	0.062	0.024	-
HCM Ctrl Dly (s/v)	-	-	13.4	9.6	-
HCM Lane LOS	-	-	B	A	-
HCM 95th %tile Q(veh)	-	-	0.2	0.1	-

Movement	EBL	EBT	EBR	WBL	WBT	WBR	NBL	NBT	NBR	SBL	SBT	SBR
Lane Configurations												
Traffic Volume (veh/h)	13	5	20	40	9	199	31	460	63	380	978	44
Future Volume (veh/h)	13	5	20	40	9	199	31	460	63	380	978	44
Initial Q (Qb), veh	0	0	0	0	0	0	0	0	0	0	0	0
Lane Width Adj.	1.00	1.00	1.00	1.00	1.00	1.00	1.00	1.00	1.00	1.00	1.00	1.00
Ped-Bike Adj(A_pbT)	1.00		1.00	1.00		1.00	1.00		1.00	1.00		1.00
Parking Bus, Adj	1.00	1.00	1.00	1.00	1.00	1.00	1.00	1.00	1.00	1.00	1.00	1.00
Work Zone On Approach		No			No			No			No	
Adj Sat Flow, veh/h/ln	1037	1037	978	2278	2278	2278	1973	2003	2003	1832	1832	1832
Adj Flow Rate, veh/h	13	5	21	41	9	205	32	474	65	392	1008	45
Peak Hour Factor	0.97	0.97	0.97	0.97	0.97	0.97	0.97	0.97	0.97	0.97	0.97	0.97
Percent Heavy Veh, %	1	1	5	1	1	1	3	1	1	1	1	1
Cap, veh/h	221	33	140	445	16	357	368	1018	139	673	1587	71
Arrive On Green	0.19	0.19	0.19	0.19	0.19	0.19	0.04	0.30	0.30	0.20	0.47	0.47
Sat Flow, veh/h	646	173	728	1679	81	1853	1879	3362	459	1745	3393	151
Grp Volume(v), veh/h	13	0	26	41	0	214	32	267	272	392	517	536
Grp Sat Flow(s),veh/h/ln	646	0	902	1679	0	1934	1879	1903	1918	1745	1741	1804
Q Serve(g_s), s	0.8	0.0	1.1	0.9	0.0	4.5	0.5	5.1	5.1	5.8	10.0	10.0
Cycle Q Clear(g_c), s	5.3	0.0	1.1	2.0	0.0	4.5	0.5	5.1	5.1	5.8	10.0	10.0
Prop In Lane	1.00		0.81	1.00		0.96	1.00		0.24	1.00		0.08
Lane Grp Cap(c), veh/h	221	0	174	445	0	372	368	576	581	673	814	844
V/C Ratio(X)	0.06	0.00	0.15	0.09	0.00	0.57	0.09	0.46	0.47	0.58	0.64	0.64
Avail Cap(c_a), veh/h	655	0	780	1573	0	1672	742	1858	1873	2456	3419	3545
HCM Platoon Ratio	1.00	1.00	1.00	1.00	1.00	1.00	1.00	1.00	1.00	1.00	1.00	1.00
Upstream Filter(I)	1.00	0.00	1.00	1.00	0.00	1.00	1.00	1.00	1.00	1.00	1.00	1.00
Uniform Delay (d), s/veh	18.7	0.0	15.0	15.8	0.0	16.3	10.0	12.6	12.6	6.9	9.0	9.0
Incr Delay (d2), s/veh	0.1	0.0	0.4	0.1	0.0	1.4	0.1	0.6	0.6	0.8	0.8	0.8
Initial Q Delay(d3), s/veh	0.0	0.0	0.0	0.0	0.0	0.0	0.0	0.0	0.0	0.0	0.0	0.0
%ile BackOfQ(50%),veh/ln	0.1	0.0	0.2	0.3	0.0	1.9	0.2	1.8	1.8	1.4	2.8	2.9
Unsig. Movement Delay, s/veh												
LnGrp Delay(d), s/veh	18.8	0.0	15.3	15.9	0.0	17.7	10.1	13.2	13.2	7.7	9.8	9.8
LnGrp LOS	B		B	B		B	B	B	B	A	A	A
Approach Vol, veh/h		39			255			571			1445	
Approach Delay, s/veh		16.5			17.4			13.0			9.2	
Approach LOS		B			B			B			A	

Timer - Assigned Phs	1	2		4	5	6		8
Phs Duration (G+Y+Rc), s	13.5	18.0		13.1	6.1	25.3		13.1
Change Period (Y+Rc), s	4.5	4.5		4.5	4.5	4.5		4.5
Max Green Setting (Gmax), s	54.5	43.5		38.5	10.5	87.5		38.5
Max Q Clear Time (g_c+I1), s	7.8	7.1		7.3	2.5	12.0		6.5
Green Ext Time (p_c), s	1.2	3.4		0.2	0.0	8.6		1.6

Intersection Summary			
HCM 7th Control Delay, s/veh			11.2
HCM 7th LOS			B

Movement	WBL	WBR	NBT	NBR	SBL	SBT
Lane Configurations						
Traffic Volume (veh/h)	162	183	371	184	376	672
Future Volume (veh/h)	162	183	371	184	376	672
Initial Q (Qb), veh	0	0	0	0	0	0
Lane Width Adj.	1.00	1.00	1.00	1.00	1.00	1.00
Ped-Bike Adj(A_pbT)	1.00	1.00		0.98	1.00	
Parking Bus, Adj	1.00	1.00	1.00	1.00	1.00	1.00
Work Zone On Approach	No		No			No
Adj Sat Flow, veh/h/ln	1885	1856	1885	1885	1885	1885
Adj Flow Rate, veh/h	169	191	386	192	392	700
Peak Hour Factor	0.96	0.96	0.96	0.96	0.96	0.96
Percent Heavy Veh, %	1	3	1	1	1	1
Cap, veh/h	318	278	2283	993	648	2283
Arrive On Green	0.18	0.18	0.64	0.64	0.64	0.64
Sat Flow, veh/h	1795	1572	3676	1558	841	3676
Grp Volume(v), veh/h	169	191	386	192	392	700
Grp Sat Flow(s),veh/h/ln	1795	1572	1791	1558	841	1791
Q Serve(g_s), s	4.1	5.5	2.1	2.5	17.2	4.3
Cycle Q Clear(g_c), s	4.1	5.5	2.1	2.5	19.3	4.3
Prop In Lane	1.00	1.00		1.00	1.00	
Lane Grp Cap(c), veh/h	318	278	2283	993	648	2283
V/C Ratio(X)	0.53	0.69	0.17	0.19	0.60	0.31
Avail Cap(c_a), veh/h	1203	1054	5797	2521	1473	5797
HCM Platoon Ratio	1.00	1.00	1.00	1.00	1.00	1.00
Upstream Filter(I)	1.00	1.00	1.00	1.00	1.00	1.00
Uniform Delay (d), s/veh	18.1	18.7	3.6	3.6	7.5	4.0
Incr Delay (d2), s/veh	1.4	3.0	0.0	0.1	0.9	0.1
Initial Q Delay(d3), s/veh	0.0	0.0	0.0	0.0	0.0	0.0
%ile BackOfQ(50%),veh/ln	1.7	2.0	0.4	0.4	1.9	0.8
Unsig. Movement Delay, s/veh						
LnGrp Delay(d), s/veh	19.5	21.7	3.6	3.7	8.4	4.0
LnGrp LOS	B	C	A	A	A	A
Approach Vol, veh/h	360		578			1092
Approach Delay, s/veh	20.7		3.6			5.6
Approach LOS	C		A			A

Timer - Assigned Phs		2				6	8
Phs Duration (G+Y+Rc), s		35.4				35.4	13.1
Change Period (Y+Rc), s		4.5				4.5	4.5
Max Green Setting (Gmax), s		78.5				78.5	32.5
Max Q Clear Time (g_c+I1), s		4.5				21.3	7.5
Green Ext Time (p_c), s		3.4				9.6	1.1

Intersection Summary	
HCM 7th Control Delay, s/veh	7.7
HCM 7th LOS	A

Movement	EBL	EBT	EBR	WBL	WBT	WBR	NBL	NBT	NBR	SBL	SBT	SBR
Lane Configurations												
Traffic Volume (veh/h)	279	190	81	69	84	140	98	1157	78	325	537	42
Future Volume (veh/h)	279	190	81	69	84	140	98	1157	78	325	537	42
Initial Q (Qb), veh	0	0	0	0	0	0	0	0	0	20	0	0
Lane Width Adj.	1.00	1.00	1.00	1.00	1.00	1.00	1.00	1.00	1.00	1.00	1.00	1.00
Ped-Bike Adj(A_pbT)	1.00		0.98	1.00		0.98	1.00		0.98	1.00		0.98
Parking Bus, Adj	1.00	1.00	1.00	1.00	1.00	1.00	1.00	1.00	1.00	1.00	1.00	1.00
Work Zone On Approach		No			No			No			No	
Adj Sat Flow, veh/h/ln	1658	1673	1673	2357	2357	2342	2076	2106	2121	1658	1658	1569
Adj Flow Rate, veh/h	297	202	86	73	89	149	104	1231	83	346	571	45
Peak Hour Factor	0.94	0.94	0.94	0.94	0.94	0.94	0.94	0.94	0.94	0.94	0.94	0.94
Percent Heavy Veh, %	2	1	1	1	1	2	4	2	1	2	2	8
Cap, veh/h	347	228	97	191	280	231	500	1477	99	435	1646	129
Arrive On Green	0.15	0.21	0.21	0.04	0.11	0.11	0.05	0.41	0.41	0.17	0.53	0.53
Sat Flow, veh/h	1579	1108	472	2245	2357	1947	1977	3798	256	1579	2953	232
Grp Volume(v), veh/h	297	0	288	73	89	149	104	648	666	346	304	312
Grp Sat Flow(s),veh/h/ln	1579	0	1579	2245	2357	1947	1977	2001	2053	1579	1575	1610
Q Serve(g_s), s	15.5	0.0	18.4	3.0	3.7	7.8	3.2	29.8	30.0	14.8	11.9	11.9
Cycle Q Clear(g_c), s	15.5	0.0	18.4	3.0	3.7	7.8	3.2	29.8	30.0	14.8	11.9	11.9
Prop In Lane	1.00		0.30	1.00		1.00	1.00		0.12	1.00		0.14
Lane Grp Cap(c), veh/h	347	0	326	191	280	231	500	778	798	435	878	898
V/C Ratio(X)	0.86	0.00	0.88	0.38	0.32	0.64	0.21	0.83	0.83	0.80	0.35	0.35
Avail Cap(c_a), veh/h	374	0	559	236	609	503	562	1143	1173	558	1240	1268
HCM Platoon Ratio	1.00	1.00	1.00	1.00	1.00	1.00	1.00	1.00	1.00	1.00	1.00	1.00
Upstream Filter(I)	1.00	0.00	1.00	1.00	1.00	1.00	1.00	1.00	1.00	1.00	1.00	1.00
Uniform Delay (d), s/veh	42.9	0.0	47.0	44.9	49.1	51.1	20.5	33.7	33.8	33.7	14.7	14.7
Incr Delay (d2), s/veh	16.5	0.0	8.7	1.2	0.6	3.0	0.2	3.5	3.5	6.1	0.2	0.2
Initial Q Delay(d3), s/veh	0.0	0.0	0.0	0.0	0.0	0.0	0.0	0.0	0.0	74.8	0.0	0.0
%ile BackOfQ(50%),veh/ln	5.3	0.0	9.2	2.0	2.6	4.6	1.8	17.6	18.1	21.6	4.5	4.6
Unsig. Movement Delay, s/veh												
LnGrp Delay(d), s/veh	59.5	0.0	55.7	46.2	49.7	54.1	20.7	37.2	37.3	114.6	14.9	14.9
LnGrp LOS	E		E	D	D	D	C	D	D	F	B	B
Approach Vol, veh/h		585			311			1418			962	
Approach Delay, s/veh		57.6			51.0			36.0			50.8	
Approach LOS		E			D			D			D	

Timer - Assigned Phs	1	2	3	4	5	6	7	8
Phs Duration (G+Y+Rc), s	22.2	47.0	8.9	26.7	9.5	59.7	20.0	15.6
Change Period (Y+Rc), s	4.5	4.5	4.5	4.5	4.5	4.5	4.5	4.5
Max Green Setting (Gmax), s	29.5	59.9	5.5	37.1	6.9	82.5	15.5	27.1
Max Q Clear Time (g_c+I1), s	16.8	32.0	5.0	20.4	5.2	13.9	17.5	9.8
Green Ext Time (p_c), s	0.9	10.5	0.0	1.5	0.0	4.1	0.0	0.9

Intersection Summary	
HCM 7th Control Delay, s/veh	45.6
HCM 7th LOS	D

Movement	EBL	EBT	EBR	WBL	WBT	WBR	NBL	NBT	NBR	SBL	SBT	SBR
Lane Configurations												
Traffic Volume (veh/h)	0	186	69	105	161	0	79	0	17	60	1051	56
Future Volume (veh/h)	0	186	69	105	161	0	79	0	17	60	1051	56
Initial Q (Qb), veh	0	0	0	0	0	0	0	0	0	0	0	0
Lane Width Adj.	1.00	1.00	1.00	1.00	1.00	1.00	1.00	1.00	1.00	1.00	1.00	1.00
Ped-Bike Adj(A_pbT)	1.00		0.95	0.98		1.00	1.00		0.88	1.00		0.95
Parking Bus, Adj	1.00	1.00	1.00	1.00	1.00	1.00	1.00	1.00	1.00	1.00	1.00	1.00
Work Zone On Approach		No			No			No			No	
Adj Sat Flow, veh/h/ln	0	1870	1870	1870	1885	0	1885	1885	1885	1885	1885	1885
Adj Flow Rate, veh/h	0	196	73	111	169	0	83	0	18	63	1106	59
Peak Hour Factor	0.95	0.95	0.95	0.95	0.95	0.95	0.95	0.95	0.95	0.95	0.95	0.95
Percent Heavy Veh, %	0	2	2	2	1	0	1	1	1	1	1	1
Cap, veh/h	0	334	268	295	563	0	171	0	37	80	1411	75
Arrive On Green	0.00	0.18	0.18	0.07	0.30	0.00	0.12	0.00	0.12	0.42	0.42	0.42
Sat Flow, veh/h	0	1870	1501	1781	1885	0	1406	0	305	191	3348	179
Grp Volume(v), veh/h	0	196	73	111	169	0	101	0	0	619	0	609
Grp Sat Flow(s),veh/h/ln	0	1870	1501	1781	1885	0	1711	0	0	1876	0	1842
Q Serve(g_s), s	0.0	8.2	3.6	4.1	5.9	0.0	4.7	0.0	0.0	24.3	0.0	24.4
Cycle Q Clear(g_c), s	0.0	8.2	3.6	4.1	5.9	0.0	4.7	0.0	0.0	24.3	0.0	24.4
Prop In Lane	0.00		1.00	1.00		0.00	0.82		0.18	0.10		0.10
Lane Grp Cap(c), veh/h	0	334	268	295	563	0	208	0	0	791	0	776
V/C Ratio(X)	0.00	0.59	0.27	0.38	0.30	0.00	0.48	0.00	0.00	0.78	0.00	0.78
Avail Cap(c_a), veh/h	0	471	378	372	784	0	491	0	0	1131	0	1111
HCM Platoon Ratio	1.00	1.00	1.00	1.00	1.00	1.00	1.00	1.00	1.00	1.00	1.00	1.00
Upstream Filter(I)	0.00	1.00	1.00	1.00	1.00	0.00	1.00	0.00	0.00	1.00	0.00	1.00
Uniform Delay (d), s/veh	0.0	32.2	30.3	25.0	23.1	0.0	35.0	0.0	0.0	21.3	0.0	21.3
Incr Delay (d2), s/veh	0.0	1.6	0.5	0.8	0.3	0.0	1.7	0.0	0.0	2.3	0.0	2.4
Initial Q Delay(d3), s/veh	0.0	0.0	0.0	0.0	0.0	0.0	0.0	0.0	0.0	0.0	0.0	0.0
%ile BackOfQ(50%),veh/ln	0.0	3.8	1.3	1.8	2.6	0.0	2.1	0.0	0.0	10.5	0.0	10.4
Unsig. Movement Delay, s/veh												
LnGrp Delay(d), s/veh	0.0	33.8	30.8	25.8	23.4	0.0	36.8	0.0	0.0	23.7	0.0	23.7
LnGrp LOS		C	C	C	C		D			C		C
Approach Vol, veh/h		269			280			101			1228	
Approach Delay, s/veh		33.0			24.3			36.8			23.7	
Approach LOS		C			C			D			C	

Timer - Assigned Phs		2	3	4		6		8				
Phs Duration (G+Y+Rc), s		14.9	10.3	19.7		40.5		30.0				
Change Period (Y+Rc), s		4.5	4.5	4.5		4.5		4.5				
Max Green Setting (Gmax), s		24.5	9.5	21.5		51.5		35.5				
Max Q Clear Time (g_c+I1), s		6.7	6.1	10.2		26.4		7.9				
Green Ext Time (p_c), s		0.5	0.1	1.0		9.6		0.9				

Intersection Summary	
HCM 7th Control Delay, s/veh	25.8
HCM 7th LOS	C

Movement	EBL	EBT	EBR	WBL	WBT	WBR	NBL	NBT	NBR	SBL	SBT	SBR
Lane Configurations												
Traffic Volume (veh/h)	30	24	134	42	21	16	85	603	32	23	1152	40
Future Volume (veh/h)	30	24	134	42	21	16	85	603	32	23	1152	40
Initial Q (Qb), veh	0	0	0	0	0	0	0	0	0	0	0	0
Lane Width Adj.	1.00	1.00	1.00	1.00	1.00	1.00	1.00	1.00	1.00	1.00	1.00	1.00
Ped-Bike Adj(A_pbT)	0.98		0.96	0.99		0.94	1.00		0.96	0.99		0.96
Parking Bus, Adj	1.00	1.00	1.00	1.00	1.00	1.00	1.00	1.00	1.00	1.00	1.00	1.00
Work Zone On Approach		No			No			No			No	
Adj Sat Flow, veh/h/ln	1885	1885	1885	1885	1885	1885	1856	1885	1885	1885	1885	1885
Adj Flow Rate, veh/h	30	24	135	42	21	16	86	609	32	23	1164	40
Peak Hour Factor	0.99	0.99	0.99	0.99	0.99	0.99	0.99	0.99	0.99	0.99	0.99	0.99
Percent Heavy Veh, %	1	1	1	1	1	1	3	1	1	1	1	1
Cap, veh/h	159	103	384	177	71	374	324	1750	92	479	1660	57
Arrive On Green	0.25	0.25	0.25	0.25	0.25	0.25	0.06	0.51	0.51	0.03	0.47	0.47
Sat Flow, veh/h	274	415	1541	322	284	1504	1767	3454	181	1795	3527	121
Grp Volume(v), veh/h	54	0	135	63	0	16	86	315	326	23	591	613
Grp Sat Flow(s),veh/h/ln	689	0	1541	606	0	1504	1767	1791	1844	1795	1791	1857
Q Serve(g_s), s	0.3	0.0	4.5	1.3	0.0	0.5	1.5	6.5	6.5	0.4	16.1	16.1
Cycle Q Clear(g_c), s	10.8	0.0	4.5	11.3	0.0	0.5	1.5	6.5	6.5	0.4	16.1	16.1
Prop In Lane	0.56		1.00	0.67		1.00	1.00		0.10	1.00		0.07
Lane Grp Cap(c), veh/h	262	0	384	248	0	374	324	907	934	479	843	874
V/C Ratio(X)	0.21	0.00	0.35	0.25	0.00	0.04	0.27	0.35	0.35	0.05	0.70	0.70
Avail Cap(c_a), veh/h	541	0	661	498	0	645	573	2537	2612	651	2392	2481
HCM Platoon Ratio	1.00	1.00	1.00	1.00	1.00	1.00	1.00	1.00	1.00	1.00	1.00	1.00
Upstream Filter(I)	1.00	0.00	1.00	1.00	0.00	1.00	1.00	1.00	1.00	1.00	1.00	1.00
Uniform Delay (d), s/veh	18.6	0.0	19.1	21.4	0.0	17.6	9.6	9.1	9.1	8.1	12.9	12.9
Incr Delay (d2), s/veh	0.4	0.0	0.5	0.5	0.0	0.0	0.4	0.2	0.2	0.0	1.1	1.0
Initial Q Delay(d3), s/veh	0.0	0.0	0.0	0.0	0.0	0.0	0.0	0.0	0.0	0.0	0.0	0.0
%ile BackOfQ(50%),veh/ln	0.6	0.0	1.6	0.9	0.0	0.2	0.5	2.1	2.2	0.1	5.7	5.9
Unsig. Movement Delay, s/veh												
LnGrp Delay(d), s/veh	19.0	0.0	19.6	21.9	0.0	17.7	10.0	9.4	9.4	8.1	14.0	14.0
LnGrp LOS	B		B	C		B	B	A	A	A	B	B
Approach Vol, veh/h		189			79			727			1227	
Approach Delay, s/veh		19.5			21.1			9.4			13.9	
Approach LOS		B			C			A			B	

Timer - Assigned Phs	1	2		4	5	6		8
Phs Duration (G+Y+Rc), s	6.1	36.0		20.4	8.3	33.8		20.4
Change Period (Y+Rc), s	4.5	4.5		4.5	4.5	4.5		4.5
Max Green Setting (Gmax), s	7.5	87.5		26.5	12.5	82.5		26.5
Max Q Clear Time (g_c+I1), s	2.4	8.5		12.8	3.5	18.1		13.3
Green Ext Time (p_c), s	0.0	4.3		0.6	0.1	11.4		0.2

Intersection Summary			
HCM 7th Control Delay, s/veh			13.1
HCM 7th LOS			B

Movement	EBL	EBT	EBR	WBL	WBT	WBR	NBL	NBT	NBR	SBL	SBT	SBR
Lane Configurations												
Traffic Volume (veh/h)	0	0	0	330	1	34	190	770	0	0	1099	187
Future Volume (veh/h)	0	0	0	330	1	34	190	770	0	0	1099	187
Initial Q (Qb), veh				0	0	0	0	0	0	0	0	0
Lane Width Adj.				1.00	1.00	1.00	1.00	1.00	1.00	1.00	1.00	1.00
Ped-Bike Adj(A_pbT)				1.00		1.00	1.00		1.00	1.00		1.00
Parking Bus, Adj				1.00	1.00	1.00	1.00	1.00	1.00	1.00	1.00	1.00
Work Zone On Approach					No			No			No	
Adj Sat Flow, veh/h/ln				1885	1885	1885	1870	1870	0	0	1870	1870
Adj Flow Rate, veh/h				359	1	37	207	837	0	0	1195	203
Peak Hour Factor				0.92	0.92	0.92	0.92	0.92	0.92	0.92	0.92	0.92
Percent Heavy Veh, %				1	1	1	2	2	0	0	2	2
Cap, veh/h				439	1	391	275	2267	0	0	1566	265
Arrive On Green				0.25	0.25	0.25	0.06	0.64	0.00	0.00	0.51	0.51
Sat Flow, veh/h				1791	5	1598	1781	3647	0	0	3135	514
Grp Volume(v), veh/h				360	0	37	207	837	0	0	695	703
Grp Sat Flow(s),veh/h/ln				1796	0	1598	1781	1777	0	0	1777	1778
Q Serve(g_s), s				14.5	0.0	1.4	1.6	8.6	0.0	0.0	24.0	24.3
Cycle Q Clear(g_c), s				14.5	0.0	1.4	1.6	8.6	0.0	0.0	24.0	24.3
Prop In Lane				1.00		1.00	1.00		0.00	0.00		0.29
Lane Grp Cap(c), veh/h				440	0	391	275	2267	0	0	915	916
V/C Ratio(X)				0.82	0.00	0.09	0.75	0.37	0.00	0.00	0.76	0.77
Avail Cap(c_a), veh/h				923	0	821	635	4232	0	0	1538	1539
HCM Platoon Ratio				1.00	1.00	1.00	1.00	1.00	1.00	1.00	1.00	1.00
Upstream Filter(I)				1.00	0.00	1.00	1.00	1.00	0.00	0.00	1.00	1.00
Uniform Delay (d), s/veh				27.4	0.0	22.4	31.6	6.6	0.0	0.0	14.8	14.9
Incr Delay (d2), s/veh				3.8	0.0	0.1	4.2	0.1	0.0	0.0	1.3	1.4
Initial Q Delay(d3), s/veh				0.0	0.0	0.0	0.0	0.0	0.0	0.0	0.0	0.0
%ile BackOfQ(50%),veh/ln				6.3	0.0	0.5	3.8	2.6	0.0	0.0	8.6	8.8
Unsig. Movement Delay, s/veh												
LnGrp Delay(d), s/veh				31.2	0.0	22.5	35.8	6.7	0.0	0.0	16.2	16.3
LnGrp LOS				C		C	D	A			B	B
Approach Vol, veh/h					397			1044			1398	
Approach Delay, s/veh					30.4			12.5			16.3	
Approach LOS					C			B			B	

Timer - Assigned Phs	2	5	6	8
Phs Duration (G+Y+Rc), s	53.5	9.4	44.1	23.3
Change Period (Y+Rc), s	4.5	4.5	4.5	4.5
Max Green Setting (Gmax), s	91.5	20.5	66.5	39.5
Max Q Clear Time (g_c+I1), s	10.6	3.6	26.3	16.5
Green Ext Time (p_c), s	7.0	0.5	13.2	2.3

Intersection Summary	
HCM 7th Control Delay, s/veh	16.8
HCM 7th LOS	B

Movement	EBL	EBT	EBR	WBL	WBT	WBR	NBL	NBT	NBR	SBL	SBT	SBR
Lane Configurations												
Traffic Volume (veh/h)	130	7	86	0	0	0	0	830	440	57	1372	0
Future Volume (veh/h)	130	7	86	0	0	0	0	830	440	57	1372	0
Initial Q (Qb), veh	0	0	0				0	0	0	0	0	0
Lane Width Adj.	1.00	1.00	1.00				1.00	1.00	1.00	1.00	1.00	1.00
Ped-Bike Adj(A_pbT)	1.00		1.00				1.00		1.00	1.00		1.00
Parking Bus, Adj	1.00	1.00	1.00				1.00	1.00	1.00	1.00	1.00	1.00
Work Zone On Approach		No						No			No	
Adj Sat Flow, veh/h/ln	1885	1885	1885				0	1870	1885	1870	1885	0
Adj Flow Rate, veh/h	137	7	0				0	874	463	60	1444	0
Peak Hour Factor	0.95	0.95	0.95				0.95	0.95	0.95	0.95	0.95	0.95
Percent Heavy Veh, %	1	1	1				0	2	1	2	1	0
Cap, veh/h	193	10					0	1299	679	343	2567	0
Arrive On Green	0.11	0.11	0.00				0.00	0.58	0.58	0.06	0.72	0.00
Sat Flow, veh/h	1712	87	1598				0	2349	1180	1781	3676	0
Grp Volume(v), veh/h	144	0	0				0	686	651	60	1444	0
Grp Sat Flow(s),veh/h/ln	1800	0	1598				0	1777	1658	1781	1791	0
Q Serve(g_s), s	4.1	0.0	0.0				0.0	14.1	14.4	0.0	10.1	0.0
Cycle Q Clear(g_c), s	4.1	0.0	0.0				0.0	14.1	14.4	0.0	10.1	0.0
Prop In Lane	0.95		1.00				0.00		0.71	1.00		0.00
Lane Grp Cap(c), veh/h	202	0					0	1023	955	343	2567	0
V/C Ratio(X)	0.71	0.00					0.00	0.67	0.68	0.17	0.56	0.00
Avail Cap(c_a), veh/h	905	0					0	3053	2848	566	7105	0
HCM Platoon Ratio	1.00	1.00	1.00				1.00	1.00	1.00	1.00	1.00	1.00
Upstream Filter(I)	1.00	0.00	0.00				0.00	1.00	1.00	1.00	1.00	0.00
Uniform Delay (d), s/veh	22.6	0.0	0.0				0.0	7.7	7.8	14.3	3.5	0.0
Incr Delay (d2), s/veh	4.6	0.0	0.0				0.0	0.8	0.9	0.2	0.2	0.0
Initial Q Delay(d3), s/veh	0.0	0.0	0.0				0.0	0.0	0.0	0.0	0.0	0.0
%ile BackOfQ(50%),veh/ln	1.8	0.0	0.0				0.0	3.7	3.6	0.5	1.3	0.0
Unsig. Movement Delay, s/veh												
LnGrp Delay(d), s/veh	27.1	0.0	0.0				0.0	8.5	8.7	14.5	3.7	0.0
LnGrp LOS	C							A	A	B	A	
Approach Vol, veh/h		144						1337			1504	
Approach Delay, s/veh		27.1						8.6			4.2	
Approach LOS		C						A			A	

Timer - Assigned Phs	1	2		4		6
Phs Duration (G+Y+Rc), s	7.4	34.8		10.4		42.3
Change Period (Y+Rc), s	4.5	4.5		4.5		4.5
Max Green Setting (Gmax), s	9.5	90.5		26.5		104.5
Max Q Clear Time (g_c+I1), s	2.0	16.4		6.1		12.1
Green Ext Time (p_c), s	0.1	13.9		0.7		17.4

Intersection Summary	
HCM 7th Control Delay, s/veh	7.3
HCM 7th LOS	A

Notes

User approved pedestrian interval to be less than phase max green.

Unsignalized Delay for [EBR] is excluded from calculations of the approach delay and intersection delay.

Movement	EBL	EBT	EBR	WBL	WBT	WBR	NBL	NBT	NBR	SBL	SBT	SBR
Lane Configurations												
Traffic Volume (veh/h)	130	73	172	119	158	238	132	676	38	162	1237	137
Future Volume (veh/h)	130	73	172	119	158	238	132	676	38	162	1237	137
Initial Q (Qb), veh	0	0	0	0	0	0	0	0	0	0	0	0
Lane Width Adj.	1.00	1.00	1.00	1.00	1.00	1.00	1.00	1.00	1.00	1.00	1.00	1.00
Ped-Bike Adj(A_pbT)	1.00		0.99	1.00		0.99	1.00		0.99	1.00		0.99
Parking Bus, Adj	1.00	1.00	1.00	1.00	1.00	1.00	1.00	1.00	1.00	1.00	1.00	1.00
Work Zone On Approach		No			No			No			No	
Adj Sat Flow, veh/h/ln	1673	1673	1673	2357	2357	2357	2121	2121	2091	1673	1673	1673
Adj Flow Rate, veh/h	141	79	187	129	172	259	143	735	41	176	1345	149
Peak Hour Factor	0.92	0.92	0.92	0.92	0.92	0.92	0.92	0.92	0.92	0.92	0.92	0.92
Percent Heavy Veh, %	1	1	1	1	1	1	1	1	3	1	1	1
Cap, veh/h	300	91	215	247	432	362	209	1975	110	417	1523	168
Arrive On Green	0.09	0.21	0.21	0.06	0.18	0.18	0.05	0.51	0.51	0.07	0.53	0.53
Sat Flow, veh/h	1593	438	1037	2245	2357	1978	2020	3879	216	1593	2885	318
Grp Volume(v), veh/h	141	0	266	129	172	259	143	382	394	176	738	756
Grp Sat Flow(s),veh/h/ln	1593	0	1476	2245	2357	1978	2020	2015	2081	1593	1589	1614
Q Serve(g_s), s	8.4	0.0	20.8	5.5	7.7	14.7	4.0	13.7	13.7	6.2	48.8	49.8
Cycle Q Clear(g_c), s	8.4	0.0	20.8	5.5	7.7	14.7	4.0	13.7	13.7	6.2	48.8	49.8
Prop In Lane	1.00		0.70	1.00		1.00	1.00		0.10	1.00		0.20
Lane Grp Cap(c), veh/h	300	0	306	247	432	362	209	1026	1059	417	839	852
V/C Ratio(X)	0.47	0.00	0.87	0.52	0.40	0.72	0.68	0.37	0.37	0.42	0.88	0.89
Avail Cap(c_a), veh/h	318	0	389	319	614	515	367	1287	1329	477	981	996
HCM Platoon Ratio	1.00	1.00	1.00	1.00	1.00	1.00	1.00	1.00	1.00	1.00	1.00	1.00
Upstream Filter(I)	1.00	0.00	1.00	1.00	1.00	1.00	1.00	1.00	1.00	1.00	1.00	1.00
Uniform Delay (d), s/veh	34.9	0.0	45.8	37.5	43.0	45.9	25.8	17.8	17.8	13.0	24.9	25.1
Incr Delay (d2), s/veh	1.1	0.0	15.6	1.7	0.6	2.7	3.9	0.2	0.2	0.7	8.3	8.9
Initial Q Delay(d3), s/veh	0.0	0.0	0.0	0.0	0.0	0.0	0.0	0.0	0.0	0.0	0.0	0.0
%ile BackOfQ(50%),veh/ln	3.3	0.0	8.9	3.2	4.6	7.6	2.2	6.3	6.5	2.2	19.2	20.0
Unsig. Movement Delay, s/veh												
LnGrp Delay(d), s/veh	36.1	0.0	61.4	39.2	43.6	48.6	29.8	18.0	18.0	13.7	33.1	34.0
LnGrp LOS	D		E	D	D	D	C	B	B	B	C	C
Approach Vol, veh/h		407			560			919			1670	
Approach Delay, s/veh		52.7			44.9			19.8			31.5	
Approach LOS		D			D			B			C	

Timer - Assigned Phs	1	2	3	4	5	6	7	8
Phs Duration (G+Y+Rc), s	12.9	65.3	12.0	29.3	10.7	67.5	14.9	26.4
Change Period (Y+Rc), s	4.5	4.5	4.5	4.5	4.5	4.5	4.5	4.5
Max Green Setting (Gmax), s	12.9	76.3	11.3	31.5	15.5	73.7	11.7	31.1
Max Q Clear Time (g_c+I1), s	8.2	15.7	7.5	22.8	6.0	51.8	10.4	16.7
Green Ext Time (p_c), s	0.2	5.5	0.1	1.0	0.2	11.3	0.0	1.7

Intersection Summary	
HCM 7th Control Delay, s/veh	33.0
HCM 7th LOS	C

Intersection	
Int Delay, s/veh	0.3

Movement	WBL	WBR	NBT	NBR	SBL	SBT
Lane Configurations						
Traffic Vol, veh/h	7	22	847	9	20	1508
Future Vol, veh/h	7	22	847	9	20	1508
Conflicting Peds, #/hr	0	0	0	0	0	0
Sign Control	Stop	Stop	Free	Free	Free	Free
RT Channelized	-	None	-	None	-	None
Storage Length	0	-	-	-	100	-
Veh in Median Storage, #	1	-	0	-	-	0
Grade, %	-3	-	-6	-	-	6
Peak Hour Factor	92	92	92	92	92	92
Heavy Vehicles, %	1	10	2	1	1	2
Mvmt Flow	8	24	921	10	22	1639

Major/Minor	Minor1		Major1		Major2	
Conflicting Flow All	1789	465	0	0	930	0
Stage 1	926	-	-	-	-	-
Stage 2	863	-	-	-	-	-
Critical Hdwy	6.22	6.8	-	-	4.12	-
Critical Hdwy Stg 1	5.22	-	-	-	-	-
Critical Hdwy Stg 2	5.22	-	-	-	-	-
Follow-up Hdwy	3.51	3.4	-	-	2.21	-
Pot Cap-1 Maneuver	99	543	-	-	737	-
Stage 1	407	-	-	-	-	-
Stage 2	434	-	-	-	-	-
Platoon blocked, %			-	-		-
Mov Cap-1 Maneuver	96	543	-	-	737	-
Mov Cap-2 Maneuver	233	-	-	-	-	-
Stage 1	407	-	-	-	-	-
Stage 2	421	-	-	-	-	-

Approach	WB	NB	SB
HCM Ctrl Dly, s/v	14.49	0	0.13
HCM LOS	B		

Minor Lane/Major Mvmt	NBT	NBR	WBLn1	SBL	SBT
Capacity (veh/h)	-	-	411	737	-
HCM Lane V/C Ratio	-	-	0.077	0.029	-
HCM Ctrl Dly (s/v)	-	-	14.5	10	-
HCM Lane LOS	-	-	B	B	-
HCM 95th %tile Q(veh)	-	-	0.2	0.1	-

Movement	EBL	EBT	EBR	WBL	WBT	WBR	NBL	NBT	NBR	SBL	SBT	SBR
Lane Configurations												
Traffic Volume (veh/h)	14	5	22	44	10	217	34	503	69	426	1069	48
Future Volume (veh/h)	14	5	22	44	10	217	34	503	69	426	1069	48
Initial Q (Qb), veh	0	0	0	0	0	0	0	0	0	0	0	0
Lane Width Adj.	1.00	1.00	1.00	1.00	1.00	1.00	1.00	1.00	1.00	1.00	1.00	1.00
Ped-Bike Adj(A_pbT)	1.00		1.00	1.00		1.00	1.00		1.00	1.00		1.00
Parking Bus, Adj	1.00	1.00	1.00	1.00	1.00	1.00	1.00	1.00	1.00	1.00	1.00	1.00
Work Zone On Approach		No			No			No			No	
Adj Sat Flow, veh/h/ln	1037	1037	978	2278	2278	2278	1973	2003	2003	1832	1832	1832
Adj Flow Rate, veh/h	14	5	23	45	10	224	35	519	71	439	1102	49
Peak Hour Factor	0.97	0.97	0.97	0.97	0.97	0.97	0.97	0.97	0.97	0.97	0.97	0.97
Percent Heavy Veh, %	1	1	5	1	1	1	3	1	1	1	1	1
Cap, veh/h	202	32	147	436	16	368	344	1058	144	671	1661	74
Arrive On Green	0.20	0.20	0.20	0.20	0.20	0.20	0.04	0.31	0.31	0.21	0.49	0.49
Sat Flow, veh/h	634	161	739	1677	83	1852	1879	3362	458	1745	3394	151
Grp Volume(v), veh/h	14	0	28	45	0	234	35	293	297	439	565	586
Grp Sat Flow(s),veh/h/ln	634	0	900	1677	0	1935	1879	1903	1918	1745	1741	1804
Q Serve(g_s), s	1.0	0.0	1.3	1.1	0.0	5.4	0.6	6.2	6.2	7.2	12.1	12.1
Cycle Q Clear(g_c), s	6.5	0.0	1.3	2.4	0.0	5.4	0.6	6.2	6.2	7.2	12.1	12.1
Prop In Lane	1.00		0.82	1.00		0.96	1.00		0.24	1.00		0.08
Lane Grp Cap(c), veh/h	202	0	179	436	0	385	344	599	603	671	852	883
V/C Ratio(X)	0.07	0.00	0.16	0.10	0.00	0.61	0.10	0.49	0.49	0.65	0.66	0.66
Avail Cap(c_a), veh/h	569	0	701	1408	0	1507	670	1674	1687	2221	3080	3193
HCM Platoon Ratio	1.00	1.00	1.00	1.00	1.00	1.00	1.00	1.00	1.00	1.00	1.00	1.00
Upstream Filter(I)	1.00	0.00	1.00	1.00	0.00	1.00	1.00	1.00	1.00	1.00	1.00	1.00
Uniform Delay (d), s/veh	21.0	0.0	16.4	17.4	0.0	18.0	10.7	13.7	13.7	7.6	9.5	9.5
Incr Delay (d2), s/veh	0.1	0.0	0.4	0.1	0.0	1.6	0.1	0.6	0.6	1.1	0.9	0.9
Initial Q Delay(d3), s/veh	0.0	0.0	0.0	0.0	0.0	0.0	0.0	0.0	0.0	0.0	0.0	0.0
%ile BackOfQ(50%),veh/ln	0.1	0.0	0.3	0.4	0.0	2.3	0.2	2.3	2.3	1.8	3.5	3.6
Unsig. Movement Delay, s/veh												
LnGrp Delay(d), s/veh	21.1	0.0	16.8	17.5	0.0	19.6	10.8	14.4	14.4	8.7	10.4	10.4
LnGrp LOS	C		B	B		B	B	B	B	A	B	B
Approach Vol, veh/h		42			279			625			1590	
Approach Delay, s/veh		18.2			19.3			14.2			10.0	
Approach LOS		B			B			B			A	

Timer - Assigned Phs	1	2		4	5	6		8
Phs Duration (G+Y+Rc), s	15.1	20.1		14.3	6.4	28.7		14.3
Change Period (Y+Rc), s	4.5	4.5		4.5	4.5	4.5		4.5
Max Green Setting (Gmax), s	54.5	43.5		38.5	10.5	87.5		38.5
Max Q Clear Time (g_c+I1), s	9.2	8.2		8.5	2.6	14.1		7.4
Green Ext Time (p_c), s	1.4	3.8		0.2	0.0	9.9		1.7

Intersection Summary			
HCM 7th Control Delay, s/veh			12.2
HCM 7th LOS			B

Movement	WBL	WBR	NBT	NBR	SBL	SBT
Lane Configurations						
Traffic Volume (veh/h)	176	200	405	201	411	734
Future Volume (veh/h)	176	200	405	201	411	734
Initial Q (Qb), veh	0	0	0	0	0	0
Lane Width Adj.	1.00	1.00	1.00	1.00	1.00	1.00
Ped-Bike Adj(A_pbT)	1.00	1.00		0.98	1.00	
Parking Bus, Adj	1.00	1.00	1.00	1.00	1.00	1.00
Work Zone On Approach	No		No			No
Adj Sat Flow, veh/h/ln	1885	1856	1885	1885	1885	1885
Adj Flow Rate, veh/h	183	208	422	209	428	765
Peak Hour Factor	0.96	0.96	0.96	0.96	0.96	0.96
Percent Heavy Veh, %	1	3	1	1	1	1
Cap, veh/h	319	279	2424	1055	624	2424
Arrive On Green	0.18	0.18	0.68	0.68	0.68	0.68
Sat Flow, veh/h	1795	1572	3676	1558	801	3676
Grp Volume(v), veh/h	183	208	422	209	428	765
Grp Sat Flow(s),veh/h/ln	1795	1572	1791	1558	801	1791
Q Serve(g_s), s	5.8	7.7	2.7	3.1	25.9	5.4
Cycle Q Clear(g_c), s	5.8	7.7	2.7	3.1	28.6	5.4
Prop In Lane	1.00	1.00		1.00	1.00	
Lane Grp Cap(c), veh/h	319	279	2424	1055	624	2424
V/C Ratio(X)	0.57	0.75	0.17	0.20	0.69	0.32
Avail Cap(c_a), veh/h	946	828	4557	1983	1101	4557
HCM Platoon Ratio	1.00	1.00	1.00	1.00	1.00	1.00
Upstream Filter(I)	1.00	1.00	1.00	1.00	1.00	1.00
Uniform Delay (d), s/veh	23.2	24.1	3.7	3.7	8.9	4.1
Incr Delay (d2), s/veh	1.6	3.9	0.0	0.1	1.3	0.1
Initial Q Delay(d3), s/veh	0.0	0.0	0.0	0.0	0.0	0.0
%ile BackOfQ(50%),veh/ln	2.4	3.0	0.6	0.6	3.1	1.2
Unsig. Movement Delay, s/veh						
LnGrp Delay(d), s/veh	24.9	28.0	3.7	3.8	10.2	4.2
LnGrp LOS	C	C	A	A	B	A
Approach Vol, veh/h	391		631			1193
Approach Delay, s/veh	26.5		3.7			6.3
Approach LOS	C		A			A

Timer - Assigned Phs		2				6	8
Phs Duration (G+Y+Rc), s		46.2				46.2	15.4
Change Period (Y+Rc), s		4.5				4.5	4.5
Max Green Setting (Gmax), s		78.5				78.5	32.5
Max Q Clear Time (g_c+I1), s		5.1				30.6	9.7
Green Ext Time (p_c), s		3.8				11.2	1.2

Intersection Summary	
HCM 7th Control Delay, s/veh	9.2
HCM 7th LOS	A

Movement	EBL	EBT	EBR	WBL	WBT	WBR	NBL	NBT	NBR	SBL	SBT	SBR
Lane Configurations												
Traffic Volume (veh/h)	279	190	85	73	84	140	99	1165	79	325	575	42
Future Volume (veh/h)	279	190	85	73	84	140	99	1165	79	325	575	42
Initial Q (Qb), veh	0	0	0	0	0	0	0	0	0	20	0	0
Lane Width Adj.	1.00	1.00	1.00	1.00	1.00	1.00	1.00	1.00	1.00	1.00	1.00	1.00
Ped-Bike Adj(A_pbT)	1.00		0.98	1.00		0.98	1.00		0.98	1.00		0.98
Parking Bus, Adj	1.00	1.00	1.00	1.00	1.00	1.00	1.00	1.00	1.00	1.00	1.00	1.00
Work Zone On Approach		No			No			No			No	
Adj Sat Flow, veh/h/ln	1658	1673	1673	2357	2357	2342	2076	2106	2121	1658	1658	1569
Adj Flow Rate, veh/h	297	202	90	78	89	149	105	1239	84	346	612	45
Peak Hour Factor	0.94	0.94	0.94	0.94	0.94	0.94	0.94	0.94	0.94	0.94	0.94	0.94
Percent Heavy Veh, %	2	1	1	1	1	2	4	2	1	2	2	8
Cap, veh/h	348	227	101	192	296	245	485	1474	100	433	1657	122
Arrive On Green	0.14	0.21	0.21	0.04	0.11	0.11	0.05	0.40	0.40	0.17	0.53	0.53
Sat Flow, veh/h	1579	1091	486	2245	2357	1948	1977	3796	257	1579	2971	218
Grp Volume(v), veh/h	297	0	292	78	89	149	105	652	671	346	324	333
Grp Sat Flow(s),veh/h/ln	1579	0	1577	2245	2357	1948	1977	2001	2053	1579	1575	1613
Q Serve(g_s), s	15.5	0.0	19.2	3.3	3.7	7.9	3.3	30.9	31.1	15.5	13.1	13.2
Cycle Q Clear(g_c), s	15.5	0.0	19.2	3.3	3.7	7.9	3.3	30.9	31.1	15.5	13.1	13.2
Prop In Lane	1.00		0.31	1.00		1.00	1.00		0.13	1.00		0.14
Lane Grp Cap(c), veh/h	348	0	328	192	296	245	485	777	797	433	879	900
V/C Ratio(X)	0.85	0.00	0.89	0.41	0.30	0.61	0.22	0.84	0.84	0.80	0.37	0.37
Avail Cap(c_a), veh/h	374	0	544	229	594	491	543	1115	1144	543	1210	1239
HCM Platoon Ratio	1.00	1.00	1.00	1.00	1.00	1.00	1.00	1.00	1.00	1.00	1.00	1.00
Upstream Filter(I)	1.00	0.00	1.00	1.00	1.00	1.00	1.00	1.00	1.00	1.00	1.00	1.00
Uniform Delay (d), s/veh	43.8	0.0	48.1	45.3	49.5	51.6	21.1	34.7	34.8	35.0	15.3	15.3
Incr Delay (d2), s/veh	16.4	0.0	10.2	1.4	0.6	2.4	0.2	4.0	4.0	6.7	0.3	0.3
Initial Q Delay(d3), s/veh	0.0	0.0	0.0	0.0	0.0	0.0	0.0	0.0	0.0	76.7	0.0	0.0
%ile BackOfQ(50%),veh/ln	5.2	0.0	9.7	2.2	2.6	4.6	1.9	18.4	18.9	23.0	5.0	5.2
Unsig. Movement Delay, s/veh												
LnGrp Delay(d), s/veh	60.2	0.0	58.3	46.7	50.1	54.0	21.3	38.7	38.8	118.4	15.6	15.6
LnGrp LOS	E		E	D	D	D	C	D	D	F	B	B
Approach Vol, veh/h		589			316			1428			1003	
Approach Delay, s/veh		59.2			51.1			37.5			51.0	
Approach LOS		E			D			D			D	

Timer - Assigned Phs	1	2	3	4	5	6	7	8
Phs Duration (G+Y+Rc), s	22.8	48.0	9.3	27.4	9.6	61.2	20.0	16.6
Change Period (Y+Rc), s	4.5	4.5	4.5	4.5	4.5	4.5	4.5	4.5
Max Green Setting (Gmax), s	29.5	59.9	5.5	37.1	6.9	82.5	15.5	27.1
Max Q Clear Time (g_c+I1), s	17.5	33.1	5.3	21.2	5.3	15.2	17.5	9.9
Green Ext Time (p_c), s	0.8	10.5	0.0	1.5	0.0	4.4	0.0	0.9

Intersection Summary	
HCM 7th Control Delay, s/veh	46.7
HCM 7th LOS	D

Movement	EBL	EBT	EBR	WBL	WBT	WBR	NBL	NBT	NBR	SBL	SBT	SBR
Lane Configurations												
Traffic Volume (veh/h)	0	186	69	107	161	0	79	0	21	60	1057	56
Future Volume (veh/h)	0	186	69	107	161	0	79	0	21	60	1057	56
Initial Q (Qb), veh	0	0	0	0	0	0	0	0	0	0	0	0
Lane Width Adj.	1.00	1.00	1.00	1.00	1.00	1.00	1.00	1.00	1.00	1.00	1.00	1.00
Ped-Bike Adj(A_pbT)	1.00		0.95	0.98		1.00	1.00		0.88	1.00		0.95
Parking Bus, Adj	1.00	1.00	1.00	1.00	1.00	1.00	1.00	1.00	1.00	1.00	1.00	1.00
Work Zone On Approach		No			No			No			No	
Adj Sat Flow, veh/h/ln	0	1870	1870	1870	1885	0	1885	1885	1885	1885	1885	1885
Adj Flow Rate, veh/h	0	196	73	113	169	0	83	0	22	63	1113	59
Peak Hour Factor	0.95	0.95	0.95	0.95	0.95	0.95	0.95	0.95	0.95	0.95	0.95	0.95
Percent Heavy Veh, %	0	2	2	2	1	0	1	1	1	1	1	1
Cap, veh/h	0	332	266	294	562	0	166	0	44	80	1414	75
Arrive On Green	0.00	0.18	0.18	0.07	0.30	0.00	0.12	0.00	0.12	0.42	0.42	0.42
Sat Flow, veh/h	0	1870	1501	1781	1885	0	1342	0	356	190	3351	178
Grp Volume(v), veh/h	0	196	73	113	169	0	105	0	0	623	0	612
Grp Sat Flow(s),veh/h/ln	0	1870	1501	1781	1885	0	1698	0	0	1876	0	1842
Q Serve(g_s), s	0.0	8.3	3.6	4.3	6.0	0.0	5.0	0.0	0.0	24.8	0.0	24.9
Cycle Q Clear(g_c), s	0.0	8.3	3.6	4.3	6.0	0.0	5.0	0.0	0.0	24.8	0.0	24.9
Prop In Lane	0.00		1.00	1.00		0.00	0.79		0.21	0.10		0.10
Lane Grp Cap(c), veh/h	0	332	266	294	562	0	210	0	0	792	0	778
V/C Ratio(X)	0.00	0.59	0.27	0.38	0.30	0.00	0.50	0.00	0.00	0.79	0.00	0.79
Avail Cap(c_a), veh/h	0	466	374	368	775	0	482	0	0	1118	0	1098
HCM Platoon Ratio	1.00	1.00	1.00	1.00	1.00	1.00	1.00	1.00	1.00	1.00	1.00	1.00
Upstream Filter(I)	0.00	1.00	1.00	1.00	1.00	0.00	1.00	0.00	0.00	1.00	0.00	1.00
Uniform Delay (d), s/veh	0.0	32.6	30.7	25.3	23.4	0.0	35.4	0.0	0.0	21.6	0.0	21.6
Incr Delay (d2), s/veh	0.0	1.7	0.5	0.8	0.3	0.0	1.8	0.0	0.0	2.5	0.0	2.6
Initial Q Delay(d3), s/veh	0.0	0.0	0.0	0.0	0.0	0.0	0.0	0.0	0.0	0.0	0.0	0.0
%ile BackOfQ(50%),veh/ln	0.0	3.8	1.3	1.8	2.6	0.0	2.2	0.0	0.0	10.8	0.0	10.6
Unsig. Movement Delay, s/veh												
LnGrp Delay(d), s/veh	0.0	34.3	31.3	26.1	23.7	0.0	37.2	0.0	0.0	24.1	0.0	24.2
LnGrp LOS		C	C	C	C		D			C		C
Approach Vol, veh/h		269			282			105			1235	
Approach Delay, s/veh		33.5			24.7			37.2			24.1	
Approach LOS		C			C			D			C	

Timer - Assigned Phs		2	3	4		6		8				
Phs Duration (G+Y+Rc), s		15.2	10.4	19.8		41.0		30.3				
Change Period (Y+Rc), s		4.5	4.5	4.5		4.5		4.5				
Max Green Setting (Gmax), s		24.5	9.5	21.5		51.5		35.5				
Max Q Clear Time (g_c+I1), s		7.0	6.3	10.3		26.9		8.0				
Green Ext Time (p_c), s		0.5	0.1	1.0		9.6		0.9				

Intersection Summary	
HCM 7th Control Delay, s/veh	26.3
HCM 7th LOS	C

Movement	EBL	EBT	EBR	WBL	WBT	WBR	NBL	NBT	NBR	SBL	SBT	SBR
Lane Configurations												
Traffic Volume (veh/h)	30	24	136	42	21	16	89	620	32	23	1160	40
Future Volume (veh/h)	30	24	136	42	21	16	89	620	32	23	1160	40
Initial Q (Qb), veh	0	0	0	0	0	0	0	0	0	0	0	0
Lane Width Adj.	1.00	1.00	1.00	1.00	1.00	1.00	1.00	1.00	1.00	1.00	1.00	1.00
Ped-Bike Adj(A_pbT)	0.98		0.97	0.99		0.94	1.00		0.96	0.99		0.96
Parking Bus, Adj	1.00	1.00	1.00	1.00	1.00	1.00	1.00	1.00	1.00	1.00	1.00	1.00
Work Zone On Approach		No			No			No			No	
Adj Sat Flow, veh/h/ln	1885	1885	1885	1885	1885	1885	1856	1885	1885	1885	1885	1885
Adj Flow Rate, veh/h	30	24	137	42	21	16	90	626	32	23	1172	40
Peak Hour Factor	0.99	0.99	0.99	0.99	0.99	0.99	0.99	0.99	0.99	0.99	0.99	0.99
Percent Heavy Veh, %	1	1	1	1	1	1	3	1	1	1	1	1
Cap, veh/h	154	100	390	172	68	380	321	1755	90	470	1661	57
Arrive On Green	0.25	0.25	0.25	0.25	0.25	0.25	0.06	0.51	0.51	0.03	0.47	0.47
Sat Flow, veh/h	257	394	1542	303	270	1505	1767	3459	177	1795	3528	120
Grp Volume(v), veh/h	54	0	137	63	0	16	90	324	334	23	595	617
Grp Sat Flow(s),veh/h/ln	651	0	1542	573	0	1505	1767	1791	1845	1795	1791	1858
Q Serve(g_s), s	0.3	0.0	4.6	1.3	0.0	0.5	1.6	6.9	6.9	0.4	16.6	16.6
Cycle Q Clear(g_c), s	11.5	0.0	4.6	12.0	0.0	0.5	1.6	6.9	6.9	0.4	16.6	16.6
Prop In Lane	0.56		1.00	0.67		1.00	1.00		0.10	1.00		0.06
Lane Grp Cap(c), veh/h	253	0	390	240	0	380	321	908	936	470	843	874
V/C Ratio(X)	0.21	0.00	0.35	0.26	0.00	0.04	0.28	0.36	0.36	0.05	0.71	0.71
Avail Cap(c_a), veh/h	513	0	648	472	0	633	561	2486	2561	637	2344	2431
HCM Platoon Ratio	1.00	1.00	1.00	1.00	1.00	1.00	1.00	1.00	1.00	1.00	1.00	1.00
Upstream Filter(I)	1.00	0.00	1.00	1.00	0.00	1.00	1.00	1.00	1.00	1.00	1.00	1.00
Uniform Delay (d), s/veh	18.9	0.0	19.3	21.9	0.0	17.8	9.9	9.3	9.3	8.3	13.2	13.2
Incr Delay (d2), s/veh	0.4	0.0	0.5	0.6	0.0	0.0	0.5	0.2	0.2	0.0	1.1	1.1
Initial Q Delay(d3), s/veh	0.0	0.0	0.0	0.0	0.0	0.0	0.0	0.0	0.0	0.0	0.0	0.0
%ile BackOfQ(50%),veh/ln	0.6	0.0	1.6	0.9	0.0	0.2	0.5	2.2	2.3	0.1	5.9	6.2
Unsig. Movement Delay, s/veh												
LnGrp Delay(d), s/veh	19.3	0.0	19.9	22.5	0.0	17.8	10.3	9.6	9.6	8.3	14.3	14.3
LnGrp LOS	B		B	C		B	B	A	A	A	B	B
Approach Vol, veh/h		191			79			748			1235	
Approach Delay, s/veh		19.7			21.6			9.7			14.2	
Approach LOS		B			C			A			B	

Timer - Assigned Phs	1	2		4	5	6		8
Phs Duration (G+Y+Rc), s	6.1	36.7		20.9	8.4	34.4		20.9
Change Period (Y+Rc), s	4.5	4.5		4.5	4.5	4.5		4.5
Max Green Setting (Gmax), s	7.5	87.5		26.5	12.5	82.5		26.5
Max Q Clear Time (g_c+I1), s	2.4	8.9		13.5	3.6	18.6		14.0
Green Ext Time (p_c), s	0.0	4.4		0.6	0.1	11.6		0.2

Intersection Summary		
HCM 7th Control Delay, s/veh		13.4
HCM 7th LOS		B

Movement	EBL	EBT	EBR	WBL	WBT	WBR	NBL	NBT	NBR	SBL	SBT	SBR
Lane Configurations												
Traffic Volume (veh/h)	0	0	0	336	1	34	199	791	0	0	1109	187
Future Volume (veh/h)	0	0	0	336	1	34	199	791	0	0	1109	187
Initial Q (Qb), veh				0	0	0	0	0	0	0	0	0
Lane Width Adj.				1.00	1.00	1.00	1.00	1.00	1.00	1.00	1.00	1.00
Ped-Bike Adj(A_pbT)				1.00		1.00	1.00		1.00	1.00		1.00
Parking Bus, Adj				1.00	1.00	1.00	1.00	1.00	1.00	1.00	1.00	1.00
Work Zone On Approach					No			No			No	
Adj Sat Flow, veh/h/ln				1885	1885	1885	1870	1870	0	0	1870	1870
Adj Flow Rate, veh/h				365	1	37	216	860	0	0	1205	203
Peak Hour Factor				0.92	0.92	0.92	0.92	0.92	0.92	0.92	0.92	0.92
Percent Heavy Veh, %				1	1	1	2	2	0	0	2	2
Cap, veh/h				444	1	396	270	2264	0	0	1571	263
Arrive On Green				0.25	0.25	0.25	0.06	0.64	0.00	0.00	0.52	0.52
Sat Flow, veh/h				1791	5	1598	1781	3647	0	0	3139	510
Grp Volume(v), veh/h				366	0	37	216	860	0	0	700	708
Grp Sat Flow(s),veh/h/ln				1796	0	1598	1781	1777	0	0	1777	1779
Q Serve(g_s), s				15.0	0.0	1.4	2.2	9.1	0.0	0.0	24.6	25.0
Cycle Q Clear(g_c), s				15.0	0.0	1.4	2.2	9.1	0.0	0.0	24.6	25.0
Prop In Lane				1.00		1.00	1.00		0.00	0.00		0.29
Lane Grp Cap(c), veh/h				445	0	396	270	2264	0	0	917	918
V/C Ratio(X)				0.82	0.00	0.09	0.80	0.38	0.00	0.00	0.76	0.77
Avail Cap(c_a), veh/h				908	0	808	625	4162	0	0	1513	1514
HCM Platoon Ratio				1.00	1.00	1.00	1.00	1.00	1.00	1.00	1.00	1.00
Upstream Filter(I)				1.00	0.00	1.00	1.00	1.00	0.00	0.00	1.00	1.00
Uniform Delay (d), s/veh				27.8	0.0	22.6	32.5	6.8	0.0	0.0	15.1	15.2
Incr Delay (d2), s/veh				3.9	0.0	0.1	5.4	0.1	0.0	0.0	1.4	1.4
Initial Q Delay(d3), s/veh				0.0	0.0	0.0	0.0	0.0	0.0	0.0	0.0	0.0
%ile BackOfQ(50%),veh/ln				6.5	0.0	0.5	4.2	2.7	0.0	0.0	8.9	9.1
Unsig. Movement Delay, s/veh												
LnGrp Delay(d), s/veh				31.6	0.0	22.7	37.9	6.9	0.0	0.0	16.5	16.6
LnGrp LOS				C		C	D	A			B	B
Approach Vol, veh/h					403			1076			1408	
Approach Delay, s/veh					30.8			13.1			16.5	
Approach LOS					C			B			B	

Timer - Assigned Phs	2	5	6	8
Phs Duration (G+Y+Rc), s	54.3	9.5	44.8	23.9
Change Period (Y+Rc), s	4.5	4.5	4.5	4.5
Max Green Setting (Gmax), s	91.5	20.5	66.5	39.5
Max Q Clear Time (g_c+I1), s	11.1	4.2	27.0	17.0
Green Ext Time (p_c), s	7.3	0.5	13.3	2.3

Intersection Summary	
HCM 7th Control Delay, s/veh	17.3
HCM 7th LOS	B

Movement	EBL	EBT	EBR	WBL	WBT	WBR	NBL	NBT	NBR	SBL	SBT	SBR
Lane Configurations												
Traffic Volume (veh/h)	130	7	90	0	0	0	0	860	453	57	1388	0
Future Volume (veh/h)	130	7	90	0	0	0	0	860	453	57	1388	0
Initial Q (Qb), veh	0	0	0				0	0	0	0	0	0
Lane Width Adj.	1.00	1.00	1.00				1.00	1.00	1.00	1.00	1.00	1.00
Ped-Bike Adj(A_pbT)	1.00		1.00				1.00		1.00	1.00		1.00
Parking Bus, Adj	1.00	1.00	1.00				1.00	1.00	1.00	1.00	1.00	1.00
Work Zone On Approach		No						No			No	
Adj Sat Flow, veh/h/ln	1885	1885	1885				0	1870	1885	1870	1885	0
Adj Flow Rate, veh/h	137	7	0				0	905	477	60	1461	0
Peak Hour Factor	0.95	0.95	0.95				0.95	0.95	0.95	0.95	0.95	0.95
Percent Heavy Veh, %	1	1	1				0	2	1	2	1	0
Cap, veh/h	192	10					0	1330	690	334	2595	0
Arrive On Green	0.11	0.11	0.00				0.00	0.59	0.59	0.05	0.72	0.00
Sat Flow, veh/h	1712	87	1598				0	2356	1174	1781	3676	0
Grp Volume(v), veh/h	144	0	0				0	708	674	60	1461	0
Grp Sat Flow(s),veh/h/ln	1800	0	1598				0	1777	1659	1781	1791	0
Q Serve(g_s), s	4.2	0.0	0.0				0.0	15.0	15.5	0.0	10.4	0.0
Cycle Q Clear(g_c), s	4.2	0.0	0.0				0.0	15.0	15.5	0.0	10.4	0.0
Prop In Lane	0.95		1.00				0.00		0.71	1.00		0.00
Lane Grp Cap(c), veh/h	201	0					0	1045	976	334	2595	0
V/C Ratio(X)	0.72	0.00					0.00	0.68	0.69	0.18	0.56	0.00
Avail Cap(c_a), veh/h	867	0					0	2924	2730	544	6806	0
HCM Platoon Ratio	1.00	1.00	1.00				1.00	1.00	1.00	1.00	1.00	1.00
Upstream Filter(I)	1.00	0.00	0.00				0.00	1.00	1.00	1.00	1.00	0.00
Uniform Delay (d), s/veh	23.6	0.0	0.0				0.0	7.8	7.9	14.8	3.5	0.0
Incr Delay (d2), s/veh	4.7	0.0	0.0				0.0	0.8	0.9	0.3	0.2	0.0
Initial Q Delay(d3), s/veh	0.0	0.0	0.0				0.0	0.0	0.0	0.0	0.0	0.0
%ile BackOfQ(50%),veh/ln	1.9	0.0	0.0				0.0	4.0	3.9	0.5	1.4	0.0
Unsig. Movement Delay, s/veh												
LnGrp Delay(d), s/veh	28.3	0.0	0.0				0.0	8.5	8.7	15.1	3.7	0.0
LnGrp LOS	C							A	A	B	A	
Approach Vol, veh/h		144						1382			1521	
Approach Delay, s/veh		28.3						8.6			4.2	
Approach LOS		C						A			A	

Timer - Assigned Phs	1	2		4		6
Phs Duration (G+Y+Rc), s	7.5	36.8		10.7		44.3
Change Period (Y+Rc), s	4.5	4.5		4.5		4.5
Max Green Setting (Gmax), s	9.5	90.5		26.5		104.5
Max Q Clear Time (g_c+I1), s	2.0	17.5		6.2		12.4
Green Ext Time (p_c), s	0.1	14.8		0.7		17.8

Intersection Summary	
HCM 7th Control Delay, s/veh	7.3
HCM 7th LOS	A

Notes

User approved pedestrian interval to be less than phase max green.

Unsignalized Delay for [EBR] is excluded from calculations of the approach delay and intersection delay.

Movement	EBL	EBT	EBR	WBL	WBT	WBR	NBL	NBT	NBR	SBL	SBT	SBR
Lane Configurations												
Traffic Volume (veh/h)	130	73	174	121	158	238	136	719	42	162	1257	137
Future Volume (veh/h)	130	73	174	121	158	238	136	719	42	162	1257	137
Initial Q (Qb), veh	0	0	0	0	0	0	0	0	0	0	0	0
Lane Width Adj.	1.00	1.00	1.00	1.00	1.00	1.00	1.00	1.00	1.00	1.00	1.00	1.00
Ped-Bike Adj(A_pbT)	1.00		0.99	1.00		0.99	1.00		0.99	1.00		0.99
Parking Bus, Adj	1.00	1.00	1.00	1.00	1.00	1.00	1.00	1.00	1.00	1.00	1.00	1.00
Work Zone On Approach		No			No			No			No	
Adj Sat Flow, veh/h/ln	1673	1673	1673	2357	2357	2357	2121	2121	2091	1673	1673	1673
Adj Flow Rate, veh/h	141	79	189	132	172	259	148	782	46	176	1366	149
Peak Hour Factor	0.92	0.92	0.92	0.92	0.92	0.92	0.92	0.92	0.92	0.92	0.92	0.92
Percent Heavy Veh, %	1	1	1	1	1	1	1	1	3	1	1	1
Cap, veh/h	299	90	215	244	434	364	205	1983	117	400	1532	166
Arrive On Green	0.09	0.21	0.21	0.06	0.18	0.18	0.05	0.51	0.51	0.07	0.53	0.53
Sat Flow, veh/h	1593	435	1040	2245	2357	1978	2020	3866	227	1593	2891	313
Grp Volume(v), veh/h	141	0	268	132	172	259	148	407	421	176	747	768
Grp Sat Flow(s),veh/h/ln	1593	0	1475	2245	2357	1978	2020	2015	2078	1593	1589	1615
Q Serve(g_s), s	8.6	0.0	21.5	5.8	7.9	15.0	4.2	15.1	15.1	6.3	51.0	52.1
Cycle Q Clear(g_c), s	8.6	0.0	21.5	5.8	7.9	15.0	4.2	15.1	15.1	6.3	51.0	52.1
Prop In Lane	1.00		0.71	1.00		1.00	1.00		0.11	1.00		0.19
Lane Grp Cap(c), veh/h	299	0	305	244	434	364	205	1033	1066	400	843	856
V/C Ratio(X)	0.47	0.00	0.88	0.54	0.40	0.71	0.72	0.39	0.39	0.44	0.89	0.90
Avail Cap(c_a), veh/h	313	0	380	309	599	503	356	1257	1297	457	958	973
HCM Platoon Ratio	1.00	1.00	1.00	1.00	1.00	1.00	1.00	1.00	1.00	1.00	1.00	1.00
Upstream Filter(I)	1.00	0.00	1.00	1.00	1.00	1.00	1.00	1.00	1.00	1.00	1.00	1.00
Uniform Delay (d), s/veh	35.8	0.0	47.0	38.4	43.9	46.9	26.8	18.2	18.2	13.3	25.5	25.7
Incr Delay (d2), s/veh	1.2	0.0	17.3	1.9	0.6	2.9	4.7	0.2	0.2	0.8	9.3	10.1
Initial Q Delay(d3), s/veh	0.0	0.0	0.0	0.0	0.0	0.0	0.0	0.0	0.0	0.0	0.0	0.0
%ile BackOfQ(50%),veh/ln	3.4	0.0	9.3	3.3	4.7	7.8	2.4	6.9	7.1	2.3	20.3	21.2
Unsig. Movement Delay, s/veh												
LnGrp Delay(d), s/veh	36.9	0.0	64.3	40.2	44.5	49.7	31.5	18.4	18.4	14.1	34.8	35.8
LnGrp LOS	D		E	D	D	D	C	B	B	B	C	D
Approach Vol, veh/h		409			563			976			1691	
Approach Delay, s/veh		54.9			45.9			20.4			33.1	
Approach LOS		D			D			C			C	

Timer - Assigned Phs	1	2	3	4	5	6	7	8
Phs Duration (G+Y+Rc), s	13.0	67.2	12.3	29.8	10.9	69.3	15.1	27.0
Change Period (Y+Rc), s	4.5	4.5	4.5	4.5	4.5	4.5	4.5	4.5
Max Green Setting (Gmax), s	12.9	76.3	11.3	31.5	15.5	73.7	11.7	31.1
Max Q Clear Time (g_c+I1), s	8.3	17.1	7.8	23.5	6.2	54.1	10.6	17.0
Green Ext Time (p_c), s	0.2	6.0	0.1	0.9	0.2	10.7	0.0	1.7

Intersection Summary	
HCM 7th Control Delay, s/veh	34.1
HCM 7th LOS	C

Intersection	
Int Delay, s/veh	1.2

Movement	WBL	WBR	NBT	NBR	SBL	SBT
Lane Configurations						
Traffic Vol, veh/h	45	77	844	27	47	1505
Future Vol, veh/h	45	77	844	27	47	1505
Conflicting Peds, #/hr	0	0	0	0	0	0
Sign Control	Stop	Stop	Free	Free	Free	Free
RT Channelized	-	None	-	None	-	None
Storage Length	0	-	-	-	100	-
Veh in Median Storage, #	1	-	0	-	-	0
Grade, %	-3	-	-6	-	-	6
Peak Hour Factor	92	92	92	92	92	92
Heavy Vehicles, %	1	10	2	1	1	2
Mvmt Flow	49	84	917	29	51	1636

Major/Minor	Minor1		Major1		Major2	
Conflicting Flow All	1852	473	0	0	947	0
Stage 1	932	-	-	-	-	-
Stage 2	920	-	-	-	-	-
Critical Hdwy	6.22	6.8	-	-	4.12	-
Critical Hdwy Stg 1	5.22	-	-	-	-	-
Critical Hdwy Stg 2	5.22	-	-	-	-	-
Follow-up Hdwy	3.51	3.4	-	-	2.21	-
Pot Cap-1 Maneuver	90	537	-	-	727	-
Stage 1	404	-	-	-	-	-
Stage 2	409	-	-	-	-	-
Platoon blocked, %			-	-		-
Mov Cap-1 Maneuver	84	537	-	-	727	-
Mov Cap-2 Maneuver	217	-	-	-	-	-
Stage 1	404	-	-	-	-	-
Stage 2	380	-	-	-	-	-

Approach	WB	NB	SB
HCM Ctrl Dly, s/v	21.58	0	0.31
HCM LOS	C		

Minor Lane/Major Mvmt	NBT	NBR	WBLn1	SBL	SBT
Capacity (veh/h)	-	-	348	727	-
HCM Lane V/C Ratio	-	-	0.381	0.07	-
HCM Ctrl Dly (s/v)	-	-	21.6	10.3	-
HCM Lane LOS	-	-	C	B	-
HCM 95th %tile Q(veh)	-	-	1.7	0.2	-

Movement	EBL	EBT	EBR	WBL	WBT	WBR	NBL	NBT	NBR	SBL	SBT	SBR
Lane Configurations												
Traffic Volume (veh/h)	14	5	22	44	10	220	34	515	69	435	1095	48
Future Volume (veh/h)	14	5	22	44	10	220	34	515	69	435	1095	48
Initial Q (Qb), veh	0	0	0	0	0	0	0	0	0	0	0	0
Lane Width Adj.	1.00	1.00	1.00	1.00	1.00	1.00	1.00	1.00	1.00	1.00	1.00	1.00
Ped-Bike Adj(A_pbT)	1.00		1.00	1.00		1.00	1.00		1.00	1.00		1.00
Parking Bus, Adj	1.00	1.00	1.00	1.00	1.00	1.00	1.00	1.00	1.00	1.00	1.00	1.00
Work Zone On Approach		No			No			No			No	
Adj Sat Flow, veh/h/ln	1037	1037	978	2278	2278	2278	1973	2003	2003	1832	1832	1832
Adj Flow Rate, veh/h	14	5	23	45	10	227	35	531	71	448	1129	49
Peak Hour Factor	0.97	0.97	0.97	0.97	0.97	0.97	0.97	0.97	0.97	0.97	0.97	0.97
Percent Heavy Veh, %	1	1	5	1	1	1	3	1	1	1	1	1
Cap, veh/h	197	32	147	433	16	369	337	1078	144	670	1686	73
Arrive On Green	0.20	0.20	0.20	0.20	0.20	0.20	0.04	0.32	0.32	0.21	0.50	0.50
Sat Flow, veh/h	632	161	739	1677	82	1853	1879	3373	449	1745	3398	147
Grp Volume(v), veh/h	14	0	28	45	0	237	35	299	303	448	578	600
Grp Sat Flow(s),veh/h/ln	632	0	900	1677	0	1935	1879	1903	1920	1745	1741	1805
Q Serve(g_s), s	1.0	0.0	1.3	1.2	0.0	5.7	0.6	6.4	6.5	7.5	12.7	12.7
Cycle Q Clear(g_c), s	6.7	0.0	1.3	2.5	0.0	5.7	0.6	6.4	6.5	7.5	12.7	12.7
Prop In Lane	1.00		0.82	1.00		0.96	1.00		0.23	1.00		0.08
Lane Grp Cap(c), veh/h	197	0	179	433	0	385	337	608	614	670	863	895
V/C Ratio(X)	0.07	0.00	0.16	0.10	0.00	0.62	0.10	0.49	0.49	0.67	0.67	0.67
Avail Cap(c_a), veh/h	552	0	684	1373	0	1470	654	1633	1647	2172	3005	3116
HCM Platoon Ratio	1.00	1.00	1.00	1.00	1.00	1.00	1.00	1.00	1.00	1.00	1.00	1.00
Upstream Filter(I)	1.00	0.00	1.00	1.00	0.00	1.00	1.00	1.00	1.00	1.00	1.00	1.00
Uniform Delay (d), s/veh	21.6	0.0	16.8	17.8	0.0	18.5	10.8	13.9	13.9	7.8	9.6	9.6
Incr Delay (d2), s/veh	0.2	0.0	0.4	0.1	0.0	1.6	0.1	0.6	0.6	1.2	0.9	0.9
Initial Q Delay(d3), s/veh	0.0	0.0	0.0	0.0	0.0	0.0	0.0	0.0	0.0	0.0	0.0	0.0
%ile BackOfQ(50%),veh/ln	0.2	0.0	0.3	0.4	0.0	2.4	0.2	2.4	2.4	1.9	3.7	3.8
Unsig. Movement Delay, s/veh												
LnGrp Delay(d), s/veh	21.7	0.0	17.2	17.9	0.0	20.1	10.9	14.5	14.5	9.0	10.5	10.5
LnGrp LOS	C		B	B		C	B	B	B	A	B	B
Approach Vol, veh/h		42			282			637			1626	
Approach Delay, s/veh		18.7			19.8			14.3			10.1	
Approach LOS		B			B			B			B	

Timer - Assigned Phs	1	2		4	5	6		8
Phs Duration (G+Y+Rc), s	15.4	20.7		14.6	6.4	29.6		14.6
Change Period (Y+Rc), s	4.5	4.5		4.5	4.5	4.5		4.5
Max Green Setting (Gmax), s	54.5	43.5		38.5	10.5	87.5		38.5
Max Q Clear Time (g_c+I1), s	9.5	8.5		8.7	2.6	14.7		7.7
Green Ext Time (p_c), s	1.4	3.9		0.2	0.0	10.3		1.7

Intersection Summary			
HCM 7th Control Delay, s/veh			12.3
HCM 7th LOS			B

Movement	WBL	WBR	NBT	NBR	SBL	SBT
Lane Configurations						
Traffic Volume (veh/h)	176	202	415	201	415	756
Future Volume (veh/h)	176	202	415	201	415	756
Initial Q (Qb), veh	0	0	0	0	0	0
Lane Width Adj.	1.00	1.00	1.00	1.00	1.00	1.00
Ped-Bike Adj(A_pbT)	1.00	1.00		0.98	1.00	
Parking Bus, Adj	1.00	1.00	1.00	1.00	1.00	1.00
Work Zone On Approach	No		No			No
Adj Sat Flow, veh/h/ln	1885	1856	1885	1885	1885	1885
Adj Flow Rate, veh/h	183	210	432	209	432	788
Peak Hour Factor	0.96	0.96	0.96	0.96	0.96	0.96
Percent Heavy Veh, %	1	3	1	1	1	1
Cap, veh/h	318	278	2448	1065	620	2448
Arrive On Green	0.18	0.18	0.68	0.68	0.68	0.68
Sat Flow, veh/h	1795	1572	3676	1558	794	3676
Grp Volume(v), veh/h	183	210	432	209	432	788
Grp Sat Flow(s),veh/h/ln	1795	1572	1791	1558	794	1791
Q Serve(g_s), s	6.0	8.2	2.8	3.2	27.7	5.8
Cycle Q Clear(g_c), s	6.0	8.2	2.8	3.2	30.4	5.8
Prop In Lane	1.00	1.00		1.00	1.00	
Lane Grp Cap(c), veh/h	318	278	2448	1065	620	2448
V/C Ratio(X)	0.58	0.75	0.18	0.20	0.70	0.32
Avail Cap(c_a), veh/h	906	794	4366	1900	1045	4366
HCM Platoon Ratio	1.00	1.00	1.00	1.00	1.00	1.00
Upstream Filter(I)	1.00	1.00	1.00	1.00	1.00	1.00
Uniform Delay (d), s/veh	24.3	25.2	3.7	3.7	9.1	4.1
Incr Delay (d2), s/veh	1.7	4.2	0.0	0.1	1.4	0.1
Initial Q Delay(d3), s/veh	0.0	0.0	0.0	0.0	0.0	0.0
%ile BackOfQ(50%),veh/ln	2.6	3.2	0.6	0.6	3.4	1.3
Unsig. Movement Delay, s/veh						
LnGrp Delay(d), s/veh	25.9	29.3	3.7	3.8	10.6	4.2
LnGrp LOS	C	C	A	A	B	A
Approach Vol, veh/h	393		641			1220
Approach Delay, s/veh	27.8		3.7			6.5
Approach LOS	C		A			A

Timer - Assigned Phs		2				6	8
Phs Duration (G+Y+Rc), s		48.5				48.5	15.9
Change Period (Y+Rc), s		4.5				4.5	4.5
Max Green Setting (Gmax), s		78.5				78.5	32.5
Max Q Clear Time (g_c+I1), s		5.2				32.4	10.2
Green Ext Time (p_c), s		3.9				11.5	1.2

Intersection Summary	
HCM 7th Control Delay, s/veh	9.4
HCM 7th LOS	A

Intersection	
Int Delay, s/veh	4.5

Movement	EBT	EBR	WBL	WBT	NBL	NBR
Lane Configurations						
Traffic Vol, veh/h	29	45	0	29	93	0
Future Vol, veh/h	29	45	0	29	93	0
Conflicting Peds, #/hr	0	0	0	0	0	0
Sign Control	Free	Free	Free	Free	Stop	Stop
RT Channelized	-	None	-	None	-	None
Storage Length	-	-	-	-	0	-
Veh in Median Storage, #	0	-	-	0	0	-
Grade, %	0	-	-	-3	0	-
Peak Hour Factor	92	92	92	92	92	92
Heavy Vehicles, %	2	2	2	2	2	2
Mvmt Flow	32	49	0	32	101	0

Major/Minor	Major1		Major2		Minor1	
Conflicting Flow All	0	0	80	0	88	56
Stage 1	-	-	-	-	56	-
Stage 2	-	-	-	-	32	-
Critical Hdwy	-	-	4.12	-	6.42	6.22
Critical Hdwy Stg 1	-	-	-	-	5.42	-
Critical Hdwy Stg 2	-	-	-	-	5.42	-
Follow-up Hdwy	-	-	2.218	-	3.518	3.318
Pot Cap-1 Maneuver	-	-	1517	-	913	1011
Stage 1	-	-	-	-	967	-
Stage 2	-	-	-	-	991	-
Platoon blocked, %	-	-		-		
Mov Cap-1 Maneuver	-	-	1517	-	913	1011
Mov Cap-2 Maneuver	-	-	-	-	913	-
Stage 1	-	-	-	-	967	-
Stage 2	-	-	-	-	991	-

Approach	EB	WB	NB
HCM Ctrl Dly, s/v	0	0	9.43
HCM LOS			A

Minor Lane/Major Mvmt	NBLn1	EBT	EBR	WBL	WBT
Capacity (veh/h)	913	-	-	1517	-
HCM Lane V/C Ratio	0.111	-	-	-	-
HCM Ctrl Dly (s/v)	9.4	-	-	0	-
HCM Lane LOS	A	-	-	A	-
HCM 95th %tile Q(veh)	0.4	-	-	0	-

Intersection: 23: SR 161 & 17th Ave SE

Movement	WB	NB	NB	SB	SB
Directions Served	LR	T	TR	L	T
Maximum Queue (ft)	60	10	10	40	3
Average Queue (ft)	21	0	0	10	0
95th Queue (ft)	53	7	7	35	2
Link Distance (ft)	571	2191	2191		458
Upstream Blk Time (%)					
Queuing Penalty (veh)					
Storage Bay Dist (ft)				100	
Storage Blk Time (%)					
Queuing Penalty (veh)					

Intersection: 23: SR 161 & 17th Ave SE

Movement	WB	NB	NB	SB
Directions Served	LR	T	TR	L
Maximum Queue (ft)	154	9	36	59
Average Queue (ft)	89	0	2	22
95th Queue (ft)	156	6	14	51
Link Distance (ft)	143	2192	2192	
Upstream Blk Time (%)	6			
Queuing Penalty (veh)	8			
Storage Bay Dist (ft)				100
Storage Blk Time (%)				
Queuing Penalty (veh)				

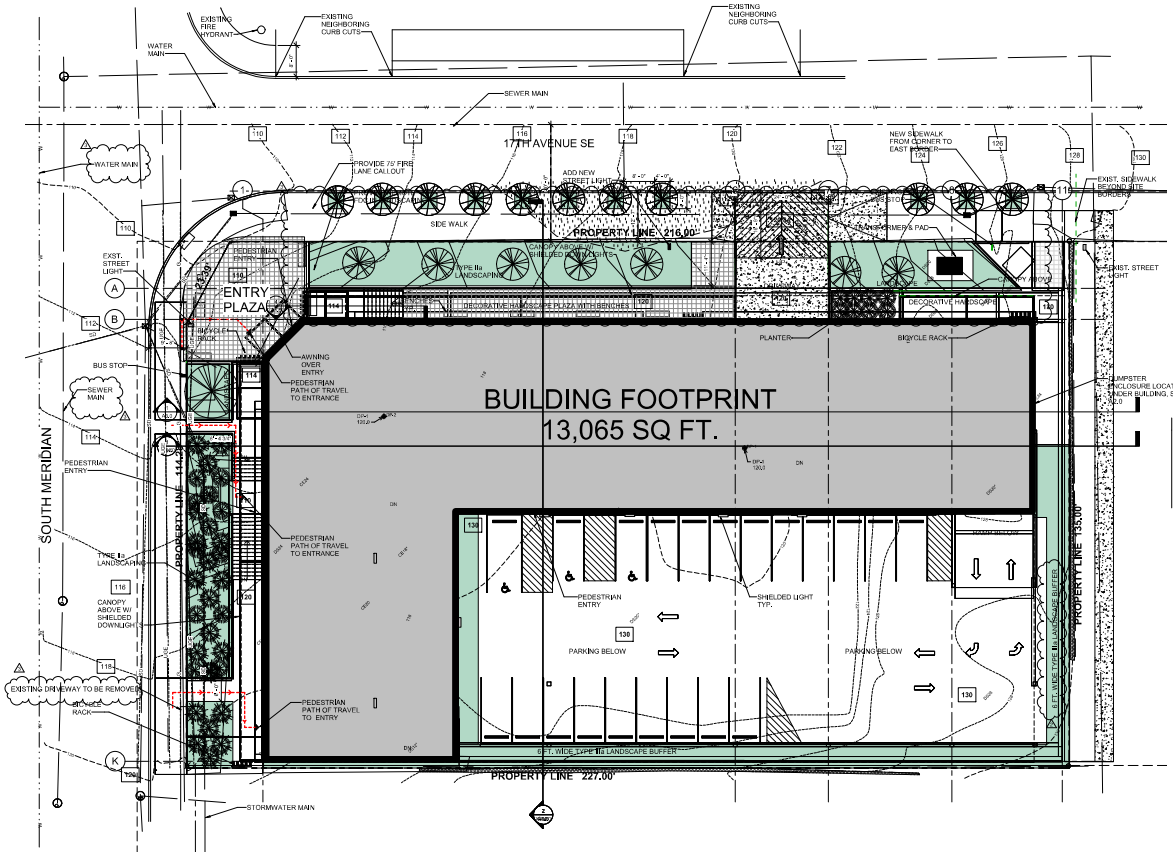

SITE PLAN
SCALE: 1" = 10'-0"

GENERAL NOTES: SITE PLAN

SITE IMPERVIOUS = 0.530 ac
SITE PERVIOUS = 0.262 ac

1. DUMPSTER ENCLOSURE LOCATED UNDER THE BUILDING ON LEVEL 3. ENCLOSURE TO BE DRAINED TO SANITARY SEWER CONNECTED TO BUILDING WASTE SYSTEM.
2. AT TIME OF CIVIL PERMIT REVIEW PROVIDE STREET LIGHTING SHEET FOR CITY TO REVIEW.

LEGEND: SITE PLAN

120	EXIST. CONTOUR ELEVATION
120	PROPOSED SPOT ELEVATION
DP-1	DATA POINT (WETLAND)
	PLOT LINE
	WATER MAIN
	EXISTING STREET LIGHT
	NEW STREET LIGHT
	EXST. BUS STOP SIGN

IHB ARCHITECTS
21620 84th Ave. S.
Ste. 200
Kent, WA 98032
(253) 469-7696
www.ihbarchitects.com

PARCEL NO. 7749000040

PUYALLUP MEDICAL OFFICES
1617 S. MERIDIAN
PUYALLUP, WA

SITE PLAN

revisions

No.	Description	Date
2	CITY COMMENTS (REV 2)	09-04-24
3	CITY COMMENTS (REV3)	10-25-24

job No.	-
date	04-29-24
drawn by	PSF
reviewed by	IHB

A1.0

10/15/2024 2:47:17 PM

South Meridian Medical

City of Puyallup Traffic Scoping Worksheet

PROJECT INFORMATION

Project Title: South Meridian Medical/General Office Date: 10.15.2024

Applicant Name: Imad Bahbah, AIA, Principal Telephone Number: 1.253.468.7696

Project Description: 6-story mixed Medical/General Office Year of Occupancy: 2026/2027

Project Location: SEC S. Meridian at 17th Ave. SE Parcel Size: 0.792 acres; 34,500 sf

Proposed Number of Access Point(s): one Existing Number of Access Point(s): none

Land Use	Quantity	ITE Land Use Code	Average Daily Trips	AM Peak Hour Trips*	PM Peak Hour Trips*
Existing Use(s)					
None					
Proposed Use(s)					
See attached Table 1; LUC's 710 (22,846 sf), 720 (19,029 sf) & 930 (2,457 sf)					124.8
Net New Trips					124.8
Traffic Impact Fees: Net New PM Peak Hour Trips x $4,500.00 = $ 561,600					

* The peak hour project trips shall be rounded to the nearest tenth.
* The project trips shall be estimated using the ITE's *Trip Generation*, 11th Edition.
* Trip generation regression equations shall be used when the R^2 value is 0.70 or greater.
* For land uses that do not exist within the ITE's *Trip Generation*, actual field data shall be collected from three local facilities that have similar characteristics to the proposal.
* For all single-family units and offices and specialty retail centers smaller than 30,000 SF, use ITE's *Trip Generation*, 11th Edition, average rate.

Identify all intersections that will be affected by 25 new project peak hour trips or more: Signalized I/S's except as noted otherwise

1. 7th Ave. SE at South Meridian
2. 9th Ave. SE at South Meridian
3. SR-512 WB ramps at South Meridian
4. SR-512 EB ramps at South Meridian
5. 15th Ave. SE at South Meridian
6. 17th Ave. SE at South Meridian (non-signal)
7. 23rd Ave. SE at South Meridian
8. 31st Ave. SE at South Meridian

Prepared by: Traffic Engineer: Mark J. Jacobs, PE, PTOE Telephone Number: 206.762.1978 o 206.799.5692 c

Address: 2614 39th Ave. SW, Seattle, WA 98116 - 2503 JakeTraffic@Comcast.net

Office Use Only

TIS ☐ **TAS** ☐ **TAIS** ☐ **No Further Work Required** ☐

Checklist (Please make sure you have included the following information):

☐ Completed Worksheet ☐ Attach Site Plan ☐ Attach Trip Assignment ☐ Attach Trip Distribution

☐ Mail or hand deliver to 333 South Meridian, Puyallup, WA 98371 or e-mail to broberts@puyallupwa.gov

4/21/22

TABLE 1 - TRIP GENERATION
SOUTH MERIDIAN MEDICAL/GENERAL OFFICE - PUYALLUP
TRAFFIC SCOPING WORKSHEET

Time Period	Size	TG Rate/Equation	Enter %	Enter Trips	Exit %	Exit Trips	Trip Total	Internal Enter %	Shared Enter Trips	Internal Exit %	Shared Exit Trips	Total	Pass-by*	Street Grid
Proposed: Office Building - General Urban/Suburban (ITE LUC 710; 22,846 sf) - General Office														
Weekday	22,846	10.84	50%	123.8	50%	123.8	247.7	-	-	-	-	-	-	-
AM peak hour	22,846	1.52	88%	30.6	12%	4.2	34.7	-	-	-	-	-	-	-
PM peak hour	22,846	1.44	17%	5.6	83%	27.3	32.9	-	-	-	-	-	-	32.9
Proposed: Medical-Dental Office Building - Stand-Alone - General Urban/Suburban (ITE LUC 720; 19,029 sf) - MOB & Massage														
Weekday	19,029	42.97(X) - 108.01	50%	354.8	50%	354.8	709.7	-	-	-	-	-	-	-
AM peak hour	19,029	0.90Ln(X) + 1.34	81%	43.8	19%	10.3	54.1	-	-	-	-	-	-	-
PM peak hour	19,029	4.07(X) - 3.17	25%	18.6	75%	55.7	74.3	-	-	-	-	-	-	74.3
Proposed: Fast Casual Restaurant - General Urban/Suburban (ITE LUC 930; 2,457 sf) - Retail/Food Service														
Weekday**	2,457	97.14	50%	119.3	50%	119.3	238.7	-	-	-	-	-	-	-
AM peak hour**	2,457	1.43	50%	1.8	50%	1.8	3.5	-	-	-	-	-	-	-
PM peak hour	2,457	12.55	55%	17.0	45%	13.9	30.8	-	-	-	-	-	43%	17.6
Total: Projected Site Traffic														
Weekday	-	-	-	598.0	-	598.0	1,196.0	-	-	-	-	-	-	-
AM peak hour	-	-	-	76.1	-	16.2	92.3	-	-	-	-	-	-	-
PM peak hour	-	-	-	41.1	-	96.9	138.0	-	-	-	-	-	-	124.8

Where X = # units or 1,000 sf

* - pass-by percent per ITE and JTE Traffic Engineering experience

** - Limited ITE data

Trip Generation per the Institute of Transportation Engineers Trip Generation Manual 11th Edition
Note: Due to rounding some values may not add up

A vehicle trip is defined as a single or one direction vehicle movement with either the origin or destination (exiting or entering) inside the study site. The above trip generation values account for all the site trips made by all vehicles for all purposes, including commuter, visitor, recreation, and service and delivery vehicle trips.

MARK J. JACOBS
STATE OF WASHINGTON
25744
REGISTERED
PROFESSIONAL ENGINEER

10.15.2024

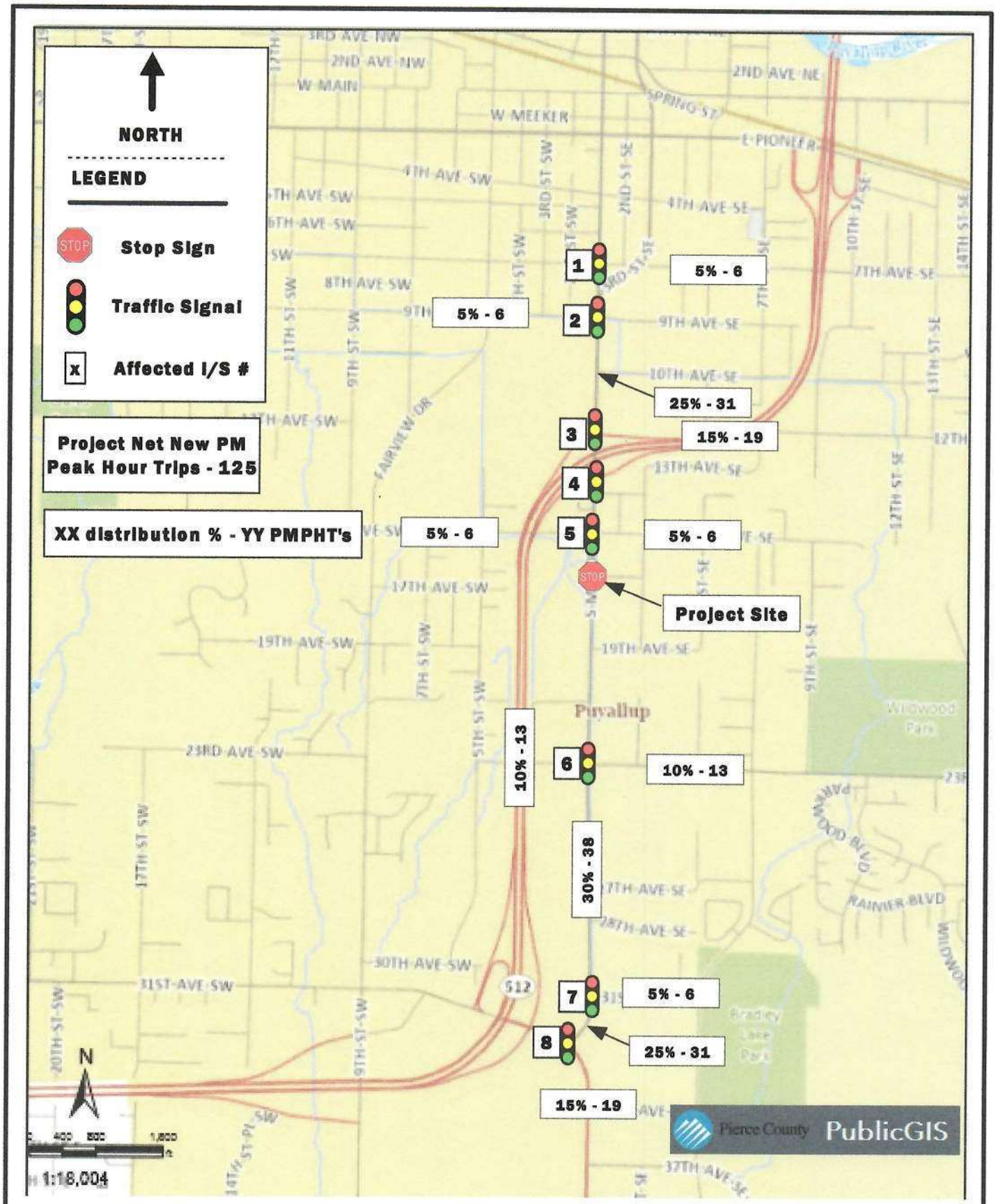

JTE, Inc.

FIGURE 1

Reprint in Color Only

SOUTH MERIDIAN MEDICAL/GENERAL OFFICE TRAFFIC SCOPING WORKSHEET

PROJECT PM PEAK HOUR TRAFFIC VOLUMES AND DISTRIBUTION

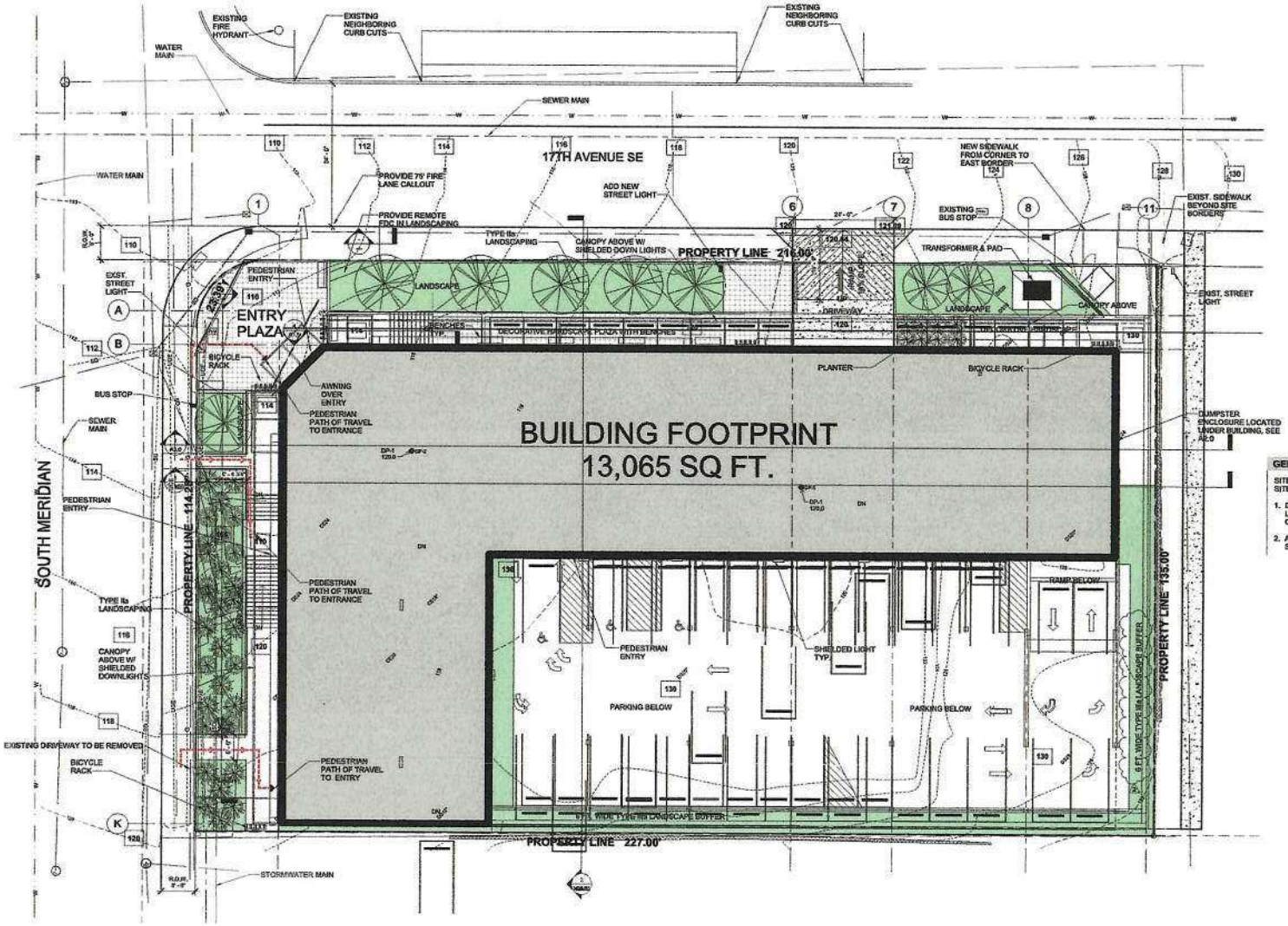

SITE PLAN
SCALE: 1" = 10'-0"

GENERAL NOTES: SITE PLAN

SITE IMPERVIOUS = 0.530 ac
SITE PERVIOUS = 0.252 ac

1. DUMPSTER ENCLOSURE LOCATED UNDER THE BUILDING ON LEVEL 3. ENCLOSURE TO BE DRAINED TO SANITARY SEWER CONNECTED TO BUILDING WASTE SYSTEM.
2. AT TIME OF CIVIL PERMIT REVIEW PROVIDE STREET LIGHTING SHEET FOR CITY TO REVIEW.

LEGEND: SITE PLAN

- 120 — EXIST. CONTOUR ELEVATION
- 120 — PROPOSED SPOT ELEVATION
- DP-1 — DATA POINT (WETLAND)
- PLOT LINE
- W — WATER MAIN
- EXISTING STREET LIGHT
- NEW STREET LIGHT
- EXST. BUS STOP SIGN

IHB ARCHITECTS
21620 84th Ave. S.
Ste. 200
Kent, WA 98032
(253) 468-7696
www.ihbarchitects.com

PUYALLUP MEDICAL OFFICES
1617 S. MERIDIAN
PUYALLUP, WA

SITE PLAN DRT3

No.	Description	Date
2	CITY COMMENTS	06-17-24

Date: 04-29-24
Drawn by: PSF
Checked by: SHB

A1.6

City of Puyallup
Planning Division
333 S. Meridian, Puyallup, WA 98371
(253) 864-4165
www.cityofpuyallup.org

August 05, 2024

Imad Bahbah
21620 84th Ave. S., Ste. 200
Kent, WA 98032

DEVELOPMENT REVIEW TEAM (DRT) LETTER	
DRT #	3
PERMIT #	PLPSP20230072
PROJECT NAME	Puyallup Medical Office Building
PERMIT TYPE	Preliminary Site Plan
PROJECT DESCRIPTION	4 levels of medical / general office floors over 2 levels of structured parking. Event space and retail also included.
SITE ADDRESS	1617 S MERIDIAN, PUYALLUP, WA 98371;
PARCEL #	7790000140;
ASSOCIATED LAND USE PERMIT(S)	PLPRE20220159
APPLICATION DATE	June 25, 2023
APPLICATION COMPLETE DATE	August 14, 2023
PROJECT STATUS	**Active Development Review Team (DRT) review case – resubmittal required.** Please address review comments below and resubmit revised permit materials and by responding in writing to the remaining items that need to be addressed.
APPROVAL EXPIRATION	**N/A –** Active permit application, not approved
CONDITIONS	**Active permit application, not approved;** Pursuant to PMC 20.11.022 regarding inactive applications, any and all pending land use applications or plat applications shall be deemed null and void unless a timely re-submittal is made to the City within 1 year of issuance of this Development Review Team (DRT) comment letter. DRT review letters typically identify requested corrections, studies or other additional required pieces of information necessary to demonstrate conformance with the City's adopted development standards and codes.

Engineering Traffic Review - Bryan Roberts; (253) 841-5542; broberts@PuyallupWA.gov

- Traffic Scoping Comments:

  -Scoping assumptions NOT approved by the City. Once the traffic scoping worksheet is approved, a written response would be sent to the applicant's traffic engineer outlining the scope of the project's Traffic Impact Study (TIS).

  -sqft calculations not consistent with updated site plan. per Architects sf calculations

  -Provide detailed calculation of GFA computation per ITE definition. GFA includes (but not limited to), circulation corridors, lobbies, bathrooms, storage, etc. ✓

  -Per the latest site plan submittal, the GFA was 53,854sqft (parking excluded). Scoping worksheet only included 30,707sqft of GFA 44,332 sf

  -Per previous comment, it is not reasonable to assume conference rooms/event space will not be utilized during normal operating hours of the facility. Proposed meeting rooms sqft must included in trip generation calculation. This type of partitioned meeting rooms are common within offices. ✓

jaketraffic@comcast.net

From: Giuseppe Cipolla <giuseppe@ihbarchitects.com>
Sent: Monday, October 14, 2024 2:40 PM
To: jaketraffic@comcast.net
Cc: Imad Bahbah
Subject: Re: 2023.017 - 1617 S. Meridian Ave Puyallup - Medical Office - Corrections

Here you go.

ELECTRIC VEHICLE CHARGING*	
REQUIRED EV CHARING STATIONS (EV)	11
REQUIRED EV READY CHARGING STATIONS (EVR)	11
REQUIRED EV CAPABLE CHARGING STATIONS (EVC)	11
TOTAL REQUIRED	33
REQUIRED ACCESSIBLE (EV) STATIONS	1

*PER WAC-51-50-429.2

TRAFFIC SCOPING GFA CALCULATION	
General Office (including circulation and restroom)	22846
MOB and Massage (including circulation and restroom)	19029
Retail/ Food Service (including circulation)	2457
Total GFA (parking excluded)	**44332**

Lobby is included in the General Office.

Best Regards,
Giuseppe Cipolla, AIA
Project Manager
Direct: 425 281 9399

IHB Architects
Seattle, WA - Austin, TX
ihbarchitects.com

On Mon, Oct 14, 2024 at 2:25 PM <jaketraffic@comcast.net> wrote:

Giuseppe

PROJECT STATISTICS

FLOOR	MEDICAL OFFICE	LOBBY	GENERAL OFFICE	SERVICE (DAY SPA)	RETAIL/ DELI	EVENT SPACE	CIRCULATION	BOH/ RESTROOM	PARKING	TOTAL GROSS SQFT	CONSTRUCTION TYPE	OCCUPANIES
LEVEL 1		1052					1296	820	19710	22878	I-A	S-2/M
LEVEL 2					1743		714		18251	20708	I-A	S-2/M
LEVEL 3				3781		3175	1433	481		8870	II-B	B/ A-3
LEVEL 4	2643		5761				1414	204		10022	II-B	B
LEVEL 5	3029		5790				1716	204		10739	II-B	B
LEVEL 6	4810		2114				2058	94		9076	II-B	B
TOTALS	**10482**	**1052**	**13665**	**3781**	**1743**	**3175**	**8631**	**1803**	**37961**	**82293**		
ROOF TOP DECK										2488		A-3

82,293
- 37,961
44,332 sf

PARKING CALCULATIONS

USE	AREA	RATIO	PARKING RQ'D
MEDICAL	10482	1/200	52
GENERAL OFFICE	13665	1/300	46
SERVICE (DAY SPA)	3781	1/300	12
RETAIL/ DELI	1743	1/300	6
PARKING REQUIRED			**116**

PARKING PROVIDED

LEVEL 1	57
LEVEL 2	40
LEVEL 3	21
TOTAL PARKING PROVIDED	**118**

EVENT SPACE PARKING 3175 1/35 90*

* EVENT SPACE WILL BE DEDICATED FOR USE AFTER BUSINESS HOURS OR ON WEEKENDS, THEREFORE PARKING WILL BE SHARED.

PARKING TYPES

STANDARD SPACES	33
COMPACT SPACES	83
ACCESSIBLE SPACES	5 INCLUDING 1 VAN SPACE

ELECTRIC VEHICLE CHARGING*

REQUIRED EV CHARING STATIONS (EV)	11
REQUIRED EV READY CHARGING STATIONS (EVR)	11
REQUIRED EV CAPABLE CHARGING STATIONS (EVC)	11
TOTAL REQUIRED	**33**
REQUIRED ACCESSIBLE (EV) STATIONS	1

*PER WAC-51-50-429.2

TRAFFIC SCOPING GFA CALCULATION

General Office (including circulation and restroom)	22846
MOB and Massage (including circulation and restroom)	18310
Retail/ Food Service (including circulation and restoroom)	3176
Total GFA (parking excluded)	**44332**